March 5, 2026

Texas Department of Transportation, Austin District

Water Pollution Abatement Plan

Original

SH 29 from Wolf Ranch Parkway to IH-35 SBFR

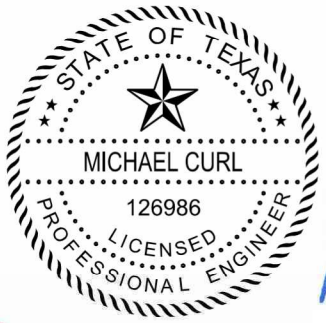

3/5/26

THE ESTES GROUP

Texas Commission on Environmental Quality

Edwards Aquifer Application Cover Page

Our Review of Your Application

The Edwards Aquifer Program staff conducts an administrative and technical review of all applications. The turnaround time for administrative review can be up to 30 days as outlined in 30 TAC 213.4(e). Generally administrative completeness is determined during the intake meeting or within a few days of receipt. The turnaround time for technical review of an administratively complete Edwards Aquifer application is 90 days as outlined in 30 TAC 213.4(e). Please know that the review and approval time is directly impacted by the quality and completeness of the initial application that is received. In order to conduct a timely review, it is imperative that the information provided in an Edwards Aquifer application include final plans, be accurate, complete, and in compliance with 30 TAC 213.

Administrative Review

1. Edwards Aquifer applications must be deemed administratively complete before a technical review can begin. To be considered administratively complete, the application must contain completed forms and attachments, provide the requested information, and meet all the site plan requirements. The submitted application and plan sheets should be final plans. Please submit one full-size set of plan sheets with the original application, and half-size sets with the additional copies.

   To ensure that all applicable documents are included in the application, the program has developed tools to guide you and web pages to provide all forms, checklists, and guidance. Please visit the below website for assistance: http://www.tceq.texas.gov/field/eapp.

2. This Edwards Aquifer Application Cover Page form (certified by the applicant or agent) must be included in the application and brought to the administrative review meeting.

3. Administrative reviews are scheduled with program staff who will conduct the review. Applicants or their authorized agent should call the appropriate regional office, according to the county in which the project is located, to schedule a review. The average meeting time is one hour.

4. In the meeting, the application is examined for administrative completeness. Deficiencies will be noted by staff and emailed or faxed to the applicant and authorized agent at the end of the meeting, or shortly after. Administrative deficiencies will cause the application to be deemed incomplete and returned.

   An appointment should be made to resubmit the application. The application is re-examined to ensure all deficiencies are resolved. The application will only be deemed administratively complete when all administrative deficiencies are addressed.

5. If an application is received by mail, courier service, or otherwise submitted without a review meeting, the administrative review will be conducted within 30 days. The applicant and agent will be contacted with the results of the administrative review. If the application is found to be administratively incomplete, it can be retrieved from the regional office or returned by regular mail. If returned by mail, the regional office may require arrangements for return shipping.

6. If the geologic assessment was completed before October 1, 2004 and the site contains "possibly sensitive" features, the assessment must be updated in accordance with the *Instructions to Geologists* (TCEQ-0585 Instructions).

Technical Review

1. When an application is deemed administratively complete, the technical review period begins. The regional office will distribute copies of the application to the identified affected city, county, and groundwater conservation district whose jurisdiction includes the subject site. These entities and the public have 30 days to provide comments on the application to the regional office. All comments received are reviewed by TCEQ.

2. A site assessment is usually conducted as part of the technical review, to evaluate the geologic assessment and observe existing site conditions. The site must be accessible to our staff. The site boundaries should be

clearly marked, features identified in the geologic assessment should be flagged, roadways marked and the alignment of the Sewage Collection System and manholes should be staked at the time the application is submitted. If the site is not marked the application may be returned.

3. We evaluate the application for technical completeness and contact the applicant and agent via Notice of Deficiency (NOD) to request additional information and identify technical deficiencies. There are two deficiency response periods available to the applicant. There are 14 days to resolve deficiencies noted in the first NOD. If a second NOD is issued, there is an additional 14 days to resolve deficiencies. If the response to the second notice is not received, is incomplete or inadequate, or provides new information that is incomplete or inadequate, the application must be withdrawn or will be denied. Please note that because the technical review is underway, whether the application is withdrawn or denied **the application fee will be forfeited**.
4. The program has 90 calendar days to complete the technical review of the application. If the application is technically adequate, such that it complies with the Edwards Aquifer rules, and is protective of the Edwards Aquifer during and after construction, an approval letter will be issued. Construction or other regulated activity may not begin until an approval is issued.

Mid-Review Modifications

It is important to have final site plans prior to beginning the permitting process with TCEQ to avoid delays.

Occasionally, circumstances arise where you may have significant design and/or site plan changes after your Edwards Aquifer application has been deemed administratively complete by TCEQ. This is considered a "Mid-Review Modification". Mid-Review Modifications may require redistribution of an application that includes the proposed modifications for public comment.

If you are proposing a Mid-Review Modification, two options are available:

- If the technical review has begun your application can be denied/withdrawn, your fees will be forfeited, and the plan will have to be resubmitted.
- TCEQ can continue the technical review of the application as it was submitted, and a modification application can be submitted at a later time.

If the application is denied/withdrawn, the resubmitted application will be subject to the administrative and technical review processes and will be treated as a new application. The application will be redistributed to the affected jurisdictions.

Please contact the regional office if you have questions. If your project is located in Williamson, Travis, or Hays County, contact TCEQ's Austin Regional Office at 512-339-2929. If your project is in Comal, Bexar, Medina, Uvalde, or Kinney County, contact TCEQ's San Antonio Regional Office at 210-490-3096

Please fill out all required fields below and submit with your application.

1. Regulated Entity Name: SH 29 from Wolf Ranch Parkway to IH-35 SBFR						**2. Regulated Entity No.:** N/A			
3. Customer Name: Texas Department of Transportation						**4. Customer No.:** 600803456			
5. Project Type: **(Please circle/check one)**	New		Modification			Extension		Exception	
6. Plan Type: **(Please circle/check one)**	WPAP	CZP	SCS	UST	AST	EXP	EXT	Technical Clarification	Optional Enhanced Measures
7. Land Use: **(Please circle/check one)**	Residential		Non-residential			**8. Site (acres):**			40.18
9. Application Fee:	N/A		**10. Permanent BMP(s):**			Stormtrooper®			
11. SCS (Linear Ft.):	N/A		**12. AST/UST (No. Tanks):**			N/A			
13. County:	Williamson		**14. Watershed:**			South Fork San Gabriel River			

Application Distribution

Instructions: Use the table below to determine the number of applications required. One original and one copy of the application, plus additional copies (as needed) for each affected incorporated city, county, and groundwater conservation district are required. Linear projects or large projects, which cross into multiple jurisdictions, can require additional copies. Refer to the "Texas Groundwater Conservation Districts within the EAPP Boundaries" map found at:

http://www.tceq.texas.gov/assets/public/compliance/field_ops/eapp/EAPP%20GWCD%20map.pdf

For more detailed boundaries, please contact the conservation district directly.

Austin Region			
County:	**Hays**	**Travis**	**Williamson**
Original (1 req.)	___	___	_1_
Region (1 req.)	___	___	_1_
County(ies)	___	___	_1_
Groundwater Conservation District(s)	___Edwards Aquifer Authority ___Barton Springs/ Edwards Aquifer ___Hays Trinity ___Plum Creek	___Barton Springs/ Edwards Aquifer	NA
City(ies) Jurisdiction	___Austin ___Buda ___Dripping Springs ___Kyle ___Mountain City ___San Marcos ___Wimberley ___Woodcreek	___Austin ___Bee Cave ___Pflugerville ___Rollingwood ___Round Rock ___Sunset Valley ___West Lake Hills	___Austin ___Cedar Park ___Florence _1_Georgetown ___Jerrell ___Leander ___Liberty Hill ___Pflugerville ___Round Rock

San Antonio Region					
County:	**Bexar**	**Comal**	**Kinney**	**Medina**	**Uvalde**
Original (1 req.)	___	___	___	___	___
Region (1 req.)	___	___	___	___	___
County(ies)	___	___	___	___	___
Groundwater Conservation District(s)	___ Edwards Aquifer Authority ___Trinity-Glen Rose	___Edwards Aquifer Authority	___Kinney	___EAA ___Medina	___EAA ___Uvalde
City(ies) Jurisdiction	___Castle Hills ___Fair Oaks Ranch ___Helotes ___Hill Country Village ___Hollywood Park ___San Antonio (SAWS) ___Shavano Park	___Bulverde ___Fair Oaks Ranch ___Garden Ridge ___New Braunfels ___Schertz	NA	___San Antonio ETJ (SAWS)	NA

I certify that to the best of my knowledge, that the application is complete and accurate. This application is hereby submitted to TCEQ for administrative review and technical review. Michael Curl
Print Name of Customer/Authorized Agent 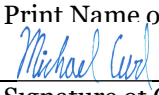 3/5/2026 Signature of Customer/Authorized Agent Date

FOR TCEQ INTERNAL USE ONLY				
Date(s)Reviewed:		Date Administratively Complete:		
Received From:		Correct Number of Copies:		
Received By:		Distribution Date:		
EAPP File Number:		Complex:		
Admin. Review(s) (No.):		No. AR Rounds:		
Delinquent Fees (Y/N):		Review Time Spent:		
Lat./Long. Verified:		SOS Customer Verification:		
Agent Authorization Complete/Notarized (Y/N):		Fee Check:	Payable to TCEQ (Y/N):	
Core Data Form Complete (Y/N):			Signed (Y/N):	
Core Data Form Incomplete Nos.:			Less than 90 days old (Y/N):	

EAPP ROADWAY APPLICATION

Edwards Aquifer Protection Program Roadway Application

Texas Commission on Environmental Quality

This application is intended only for projects which a major roadway is designed for construction, such as State highways, County roads, and City thoroughfares.

Designed for Regulated Activities on the Contributing Zone to the Edwards Aquifer in relation to 30 TAC §213.24, Regulated Activities on the Edwards Aquifer Recharge Zone, in relation to 30 TAC §213.5(b), Effective June 1, 1999.

To ensure that the application is administratively complete, confirm that all fields in the form are complete, verify that all requested information is provided, consistently reference the same site and contact person in all forms in the application, and ensure forms are signed by the appropriate party.

Note: Including all the information requested in the form and attachments contributes to more streamlined technical reviews.

Signature

To the best of my knowledge, the responses to this form accurately reflect all information requested concerning the proposed regulated activities and methods to protect the Edwards Aquifer.

The application was prepared by:

Print Name of Customer/Agent: Michael Curl

Date: 3/5/2026

Signature of Customer/Agent:

Michael Curl

Project Information

1. Regulated Entity (Project) Name: SH 29 from Wolf Ranch Parkway to IH-35 SBFR
2. County: Williamson
3. Stream Basin(s): San Gabriel Sub Basin, Brazos River Basin
4. Groundwater Conservation District (if applicable): N/A
5. Customer (Applicant):

   Contact Person: Kyle Russell
   Entity: Texas Department of Transportation
   Mailing Address: 2727 S Austin Ave
   City, State: Georgetown,TX Zip: 78626
   Telephone: 512-930-5402
   Email Address: kyle.russell@txdot.gov

6. Agent (Representative):

Contact Person: Michael Curl
Entity: The Estes Group, LLC
Mailing Address: 1205 BMC Drive
City, State: Cedar Park, TX Zip: 78613
Telephone: 512-350-1613
Email Address: michael.curl@teg-tx.com

7. Landowner of R.O.W. (Right of Way)
Person or entity responsible for maintenance of water quality Best Management Practices (BMPs), if not applicant.

Contact Person: John Taylor
Entity: Texas Department of Transportation
Mailing Address: 2727 S Austin Ave
City, State: Georgetown,TX Zip: 78626
Telephone: 512-930-4700
Email Address: john.taylor@txdot.gov

8. ☒ **The TCEQ must be able to inspect the project site or the application will be returned**. Sufficient survey marking is provided on the project to allow TCEQ regional staff to locate the boundaries and alignment of any regulated activities and the geologic or manmade features noted in the Geologic Assessment.

☒ Survey marking will be completed by this date: Sufficient staking will be provided on the project site once construction begins.

9. ☒ **Attachment A - Road Map**. A road map showing directions to and the location of the project site is attached. The map clearly shows the boundary of the project site.

10. ☒ **Attachment B - USGS Quadrangle**. A copy of the official 7 ½ minute USGS Quadrangle Map (Scale: 1" = 2000') is attached. The map(s) clearly show:

☒ Project site boundaries
☒ USGS Quadrangle Name(s)
☒ All drainage paths from site to surface waters

11. ☒ **This project extends into (Check all that apply):**

☒ Recharge Zone (RZ)
☐ Contributing Zone (CZ)
☐ Transition Zone (TZ)
☐ Contributing Zone within Transition Zone (CZ/TZ)
☐ Zone not regulated by EAPP

12. ☒ **Attachment C - Project Description**. A detailed narrative description of the proposed project is attached. The project description is consistent throughout the application and contains, at a minimum, the following details:

    ☒ Complete site area [Acres]
    ☒ Offsite upgradient stormwater areas to be captured
    ☒ Impervious area [Acres]
    ☒ Permanent BMP(s)
    ☒ Proposed site use
    ☒ Existing roadway (paved and/or unpaved)
    ☒ Structures to be demolished [Include demo phase]
    ☒ Major interim phases

13. Existing project site conditions are noted below:

    ☒ Existing paved and/or unpaved roads
    ☒ Undeveloped (Cleared)
    ☐ Undeveloped (Undisturbed/Not cleared)
    ☐ Existing commercial site
    ☐ Existing industrial site
    ☐ Existing residential site
    ☐ Other: _____

14. ☒ **Attachment D - Factors Affecting Surface Water Quality**. A detailed description of all factors that could affect surface water quality is attached.

15. ☒ Only inert materials as defined by 30 TAC §330.3 will be used as fill material.

16. Type of pavement or road surface to be used:

    ☐ Concrete
    ☒ Asphaltic concrete pavement
    ☐ Permeable Friction Course (PFC)
    ☐ Other: _____

17. Right of Way (R.O.W.) and Pavement Area:

    R.O.W. for project: 40.18 (ac.)
    Length: 3,241.38 ft.
    Width: varies from 140 ft. to 200 ft.
    Impervious cover (IC): 23.60 (ac.)
    Total of Pavement area 23.60 (ac.) ÷ R.O.W. area 40.18 (ac.) x 100 = 58.7% IC.

    ☒ CAD program was used to determine areas.
    ☒ Number of travel lanes: proposed: 6, existing: 4
    ☒ Typical widths of lanes: 12 (ft.)
    ☒ Are intersections also being improved? (Y/N) Y

Site Plan Requirements

Items 18 - 28 must be included on the Site Plan.

18. ☒ The Site Plan must have a minimum scale of 1" = 400'.
    Site Plan Scale: 1" = 100'

19. 100-year floodplain boundaries:

    ☐ Some part(s) of the project site is located within the 100-year floodplain. The floodplain is shown and labeled. The 100-year floodplain boundaries are based on the following specific (including date of material) source(s): _____.

    ☒ No part of the project site is located within the 100-year floodplain.

20. ☒ A layout of the development with existing and finished contours at appropriate, but not greater than ten-foot contour intervals is shown. Sensitive features, lots, wells, buildings, roads, culverts, etc. are shown on the site plan.

21. ☐ A figure (map) indicating all paths of drainage from the site to surface waters.

    ☐ Name all stream crossings: _____
    ☐ Drainage patterns and approximate slopes.
    ☒ There will be no discharge to surface waters.

22. ☒ Distinguish between areas of soil disturbance and areas which will not be disturbed.

23. ☒ Show locations of major structural and nonstructural controls. These are the temporary and permanent best management practices. Include the following:

    ☒ Show design and location of any hazardous materials traps.
    ☒ Show design at outfalls of major control structures and conveyances.
    ☒ A description of the BMPs and measures that prevent pollutants from entering surface streams.

24. Show locations of staging areas or project specific locations (PSL). Are they:

    ☐ Onsite, within project R.O.W.
    ☐ Offsite.
    ☒ Not yet determined. (Requires future authorization)

25. ☒ Show locations where soil stabilization practices are expected to occur.

26. ☒ Show surface waters (including wetlands).

27. Temporary aboveground storage tank facilities:

    ☐ Temporary aboveground storage tank facilities will be located on this site. Show on site plan.
    ☒ Temporary aboveground storage tank facilities will not be located on this site.

28. ☒ Plan(s) also include:

    ☒ Sidewalks
    ☒ Related turn lanes
    ☒ Demolition plans
    ☐ Other improved areas: _____
    ☒ Shared-use paths
    ☐ Off-site improvements and staging areas
    ☒ Utility relocations

Permanent Best Management Practices (BMPs)

Description of practices and measures that will be used after construction is completed.

29. ☒ Permanent BMPs and measures have been designed, and will be constructed, operated, and maintained to ensure that 80% of the incremental increase in the annual mass loading of total suspended solids (TSS) from the site caused by the regulated activity is removed. These quantities have been calculated in accordance with technical guidance accepted by the executive director.

    ☒ The TCEQ Technical Guidance Manual (TGM) was used to design permanent BMPs and measures for this site.

    ☐ A technical guidance other than the TCEQ TGM was used to design permanent BMPs and measures for this site. The complete citation for the technical guidance that was used: _____

30. ☒ **Attachment E - BMPs for Upgradient (Offsite) Stormwater.**

    ☒ A description of the BMPs and measures that will be used to prevent pollution of surface water, groundwater, or stormwater that originates upgradient from the site and flows across the site is attached.

    ☐ No surface water, groundwater or stormwater originates upgradient from the site and flows across the site, and an explanation is attached.

    ☐ Permanent BMPs or measures are not required to prevent pollution of surface water, groundwater, or stormwater that originates upgradient from the site and flows across the site, and an explanation is attached.

31. ☒ **Attachment F - BMPs for On-site Stormwater**.

    ☒ A description of the BMPs and measures that will be used to prevent pollution of surface water or groundwater that originates on-site or flows off the site, including pollution caused by contaminated stormwater runoff from the site is attached.

    ☐ Permanent BMPs or measures are not required to prevent pollution of surface water or groundwater that originates on-site or flows off the site, including pollution caused by contaminated stormwater runoff, and an explanation is attached.

32. ☒ **Attachment G - Construction Plans**. Construction plans and design calculations for the proposed permanent BMPs and measures have been prepared by or under the direct supervision of a Texas Licensed Professional Engineer, and are signed, sealed, and dated. Construction plans for the proposed permanent BMPs and measures are attached and include all proposed structural plans and specifications, and appropriate details.

    ☒ Major bridge cross-sections, and roadway plan and profiles

    ☒ BMP plans and details

    ☒ Design calculations

    ☒ Erosion control

    ☒ TCEQ Construction Notes

    ☒ SW3P

    ☒ EPIC, as necessary

33. ☒ **Attachment H - Inspection, Maintenance, Repair and Retrofit Plan**. A site and BMP specific plan for the inspection, maintenance, repair, and, if necessary, retrofit of the permanent BMPs and measures is attached. The plan fulfills all the following:

    ☒ Prepared and certified by the engineer designing the permanent BMPs and measures.
    ☒ Signed by the owner or responsible party.
    ☒ Outlines specific procedures for documenting inspections, maintenance, repairs, and, if necessary, retrofit.
    ☒ Contains a discussion of recordkeeping procedures.

34. ☐ **Attachment I - Pilot-Scale Field Testing Plan.** Pilot studies for BMPs that are not recognized by the Executive Director require prior approval from the TCEQ. A plan for pilot-scale field testing is attached.

    ☒ N/A

35. ☒ **Attachment J - Measures for Minimizing Surface Stream Contamination.** A description of the measures that will be used to avoid or minimize surface stream contamination and changes in the way in which water enters a stream as a result of the construction and development is attached. The measures address increased stream flashing, the creation of stronger flows, and in-stream effects caused by the regulated activity which increase erosion or may result in water quality degradation.

    ☒ Include permanent spill measures used to contain hydrocarbons or hazardous substances by way of traps, or response contingencies.

36. The applicant is responsible for maintaining the permanent BMPs after construction until such time as the maintenance obligation is either assumed in writing by another entity.

    If the applicant intends to transfer responsibility, check the box below.

    ☒ Yes

    A copy of the transfer of responsibility must be filed with the executive director at the appropriate regional office within 30 days.

Stormwater to be generated by the Proposed Project

Description of practices and measures that will be used during construction.

37. ☒ The site description, controls, maintenance, and inspection requirements for the Storm Water Pollution Prevention Plan (SWPPP or SW3P) developed under the Texas Pollutant Discharge Elimination System (TPDES) general permits for stormwater discharges have been submitted to fulfill paragraphs 30 TAC §213.24(1-5) & §213.5(b) of the technical report.

    ☒ The Temporary Stormwater Section (TCEQ-0602) is included with the application.
    ☒ The SWPPP (SW3P) will serve as the Temporary Stormwater Section (TCEQ-0602).

38. ☒ **Attachment K - Volume and Character of Stormwater**. A detailed description of the volume (quantity) and character (quality) of the stormwater runoff expected to occur from the proposed project is attached. The estimates of stormwater runoff quality and quantity are based on area and type of impervious cover.

    ☒ Include the pre-construction runoff coefficient.
    ☒ Include the post-construction runoff coefficient.

Administrative Information

39. ☒ Submit one (1) original and one (1) copy of the application, plus one electronic copy as needed, for each affected incorporated city, groundwater conservation district, and county in which the project will be located. The TCEQ is required to distribute the additional copies to these jurisdictions.

40. The fee for the plan(s) is based on:

    ☐ The total R.O.W. (as in Item 17).

    ☒ TxDOT roadway project.

ATTACHMENT A

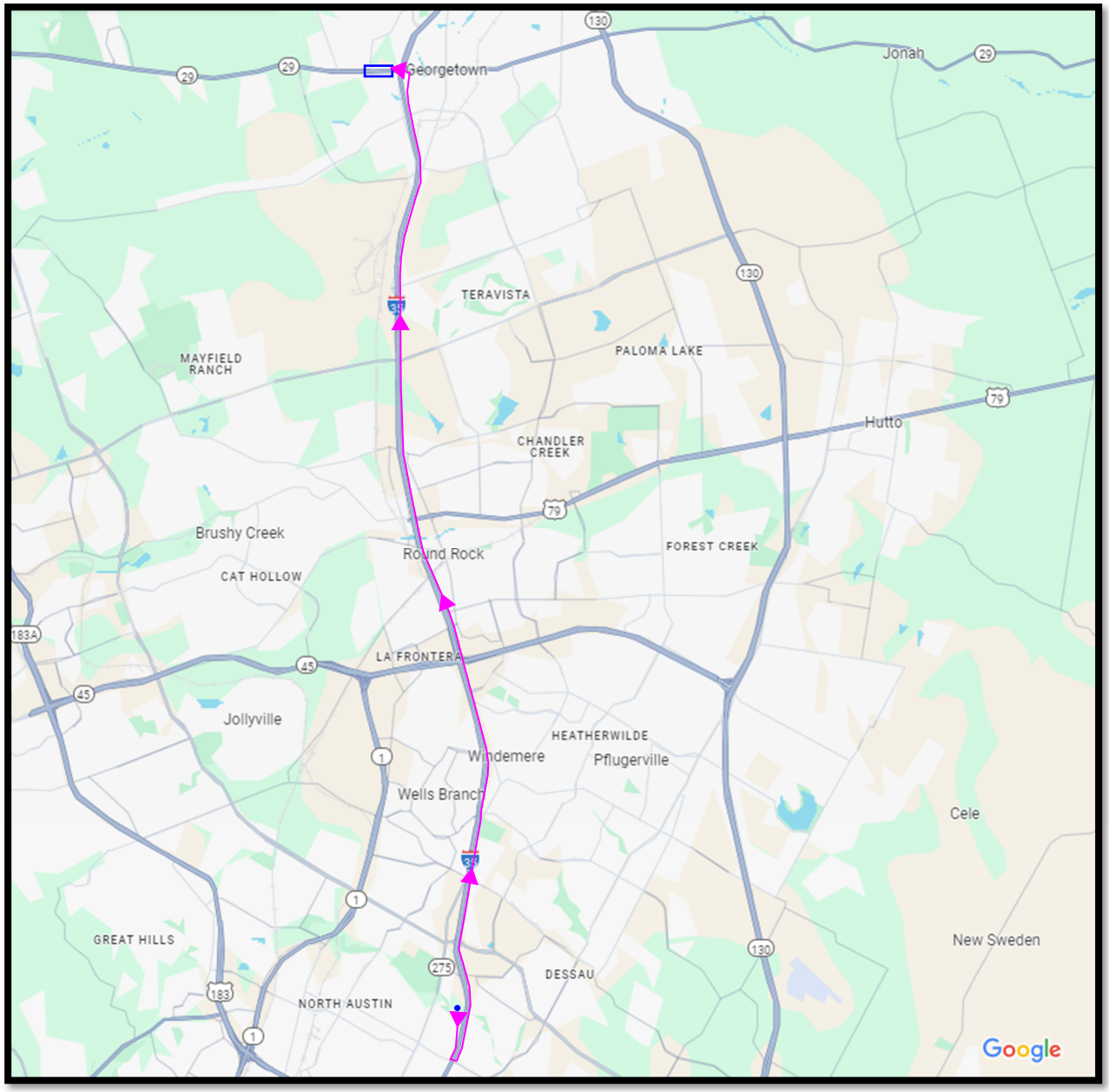

Attachment A - Road Map

ATTACHMENT B

U.S. DEPARTMENT OF THE INTERIOR
U.S. GEOLOGICAL SURVEY

The National Map US Topo

GEORGETOWN QUADRANGLE
TEXAS - WILLIAMSON COUNTY
7.5-MINUTE SERIES

Attachment B - USGS Map



Edwards Recharge Zone shown on following map sheet.

Produced by the United States Geological Survey
North American Datum of 1983 (NAD83)
World Geodetic System of 1984 (WGS84). Projection and 1 000-meter grid:Universal Transverse Mercator, Zone 14R

This map is not a legal document. Boundaries may be generalized for this map scale. Private lands within government reservations may not be shown. Obtain permission before entering private lands.

Imagery.....NAIP, August 2016 - November 2016
Roads.....U.S. Census Bureau, 2015 - 2019
Names.....GNIS, 2003 - 2022
Hydrography.....National Hydrography Dataset, 2002 - 2021
Contours.....National Elevation Dataset, 2004
Boundaries.....Multiple sources; see metadata file 2019 - 2021

Wetlands.....FWS National Wetlands Inventory Not Available

UTM GRID AND 2019 MAGNETIC NORTH DECLINATION AT CENTER OF SHEET
MN
GN
3°42′ 66 MILS
0°40′ 12 MILS

U.S. National Grid
100,000-m Square ID
PV
00
PU
Grid Zone Designation 14R

SCALE 1:24 000
1 0.5 0 KILOMETERS 1 2
1000 500 0 METERS 1000 2000
1 0.5 0 1 MILES
1000 0 1000 2000 3000 4000 5000 6000 7000 8000 9000 10000 FEET

CONTOUR INTERVAL 10 FEET
NORTH AMERICAN VERTICAL DATUM OF 1988

This map was produced to conform with the National Geospatial Program US Topo Product Standard.

TEXAS
QUADRANGLE LOCATION

1	2	3
4		5
6	7	8

1 Florence
2 Cobbs Cavern
3 Jarrell
4 Leander NE
5 Weir
6 Leander
7 Round Rock
8 Hutto

ADJOINING QUADRANGLES

ROAD CLASSIFICATION
Expressway
Secondary Hwy
Ramp
Local Connector
Local Road
4WD
Interstate Route
US Route
State Route

GEORGETOWN, TX
2022

NSN 7643016396286
NGA REF NO. USGSX24K17084

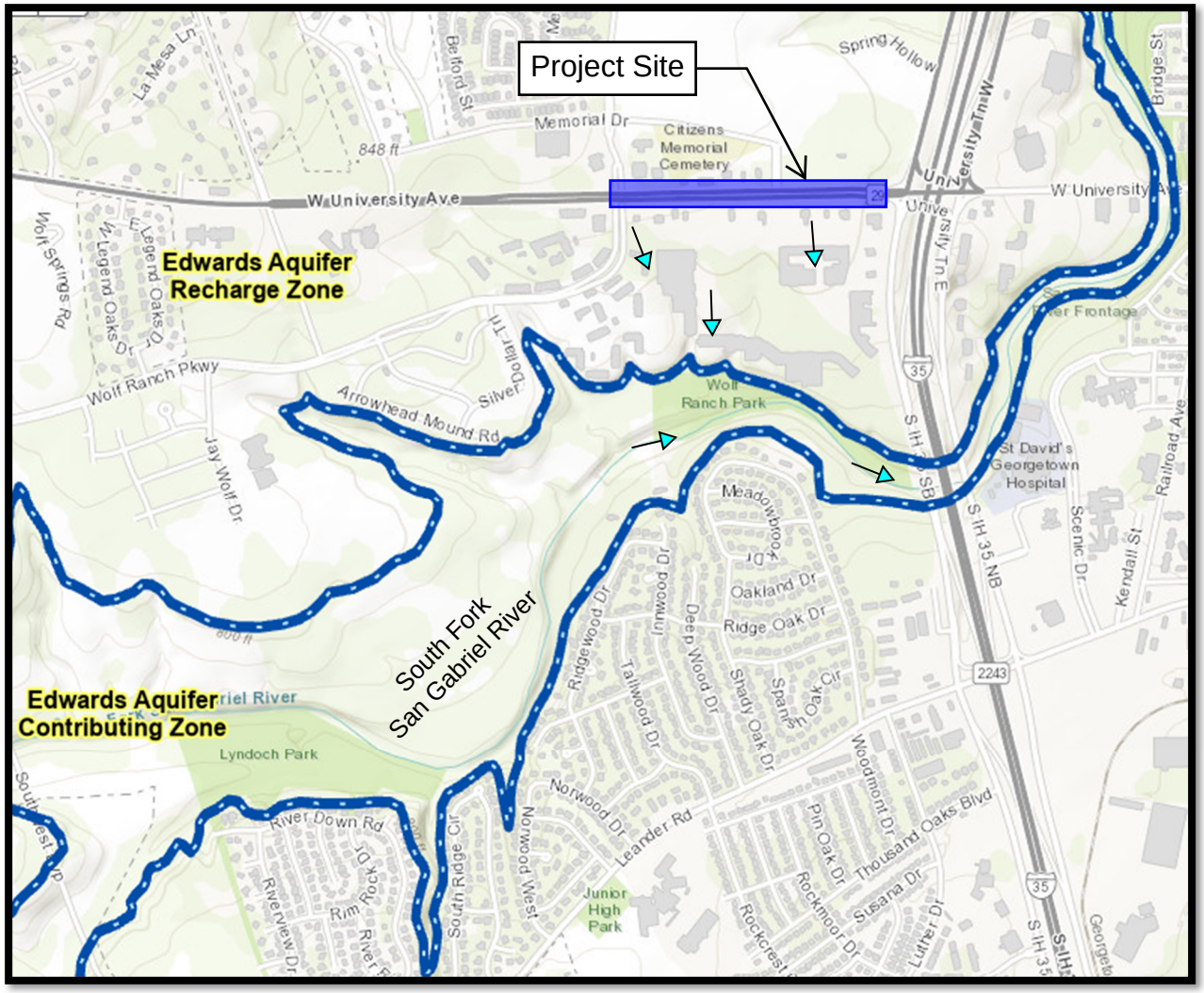

Attachment B - Edwards Recharge Zone Map

ATTACHMENT C

Project Description

This approximately 0.61-mile roadway project lies within Williamson County and inside the city limits of Georgetown, Texas. The total project area is 40.18 acres of which 22.30 acres is impervious area today. As a result of the widening on SH 29, there will be approximately 1.30 acres of additional impervious are due to the proposed improvements, bringing total impervious cover to 23.60 acres.

The project includes widening existing SH 29 to a 6-lane arterial with raised median, extended turn lanes, and intersection improvements. The proposed limits are from Wolf Ranch Parkway to IH-35 SBFR. The ROW acquisition is complete (documents in Appendix C). Property was acquired from Wolf Ranch Town Center, an existing commercial development along the south side of SH 29.

Within the proposed project limits, existing SH 29 has a usual pavement width of approx. 84' and a maximum width of 108' at existing intersections. Please see the as-builts provided in Appendix B at the end of this application for information regarding the existing pavement that this project ties into. The proposed typical section is usually 4-12' thru lanes (2 in each direction), dual lefts at intersections/approaches, and a section that includes a 3rd WB thru lane. It also includes raised median, curb and gutter, shared-use-path, sidewalk, and traffic signals.

The proposed temporary WPAP will implement silt fences, erosion control logs, rock filter dams, inlet protection, soil retention blankets, temporary seeding and construction exits as temporary measures to treat runoff from the construction site. The proposed permanent BMP is a Stormtrooper® stormwater quality interceptor, which will treat runoff exiting the project area. These permanent best management practices (BMPs) are designed in accordance with TCEQ's Technical Guidance Manual (TGM) RG-348 (2005) with errata and addendum sheets added in 2009 and 2017, respectively, to remove increased TSS load from the proposed improvements after construction.

The existing impervious cover located within the proposed SH 29 project limits is within the treatment area of an existing WPAP (EAPP ID No. 03082601). While the existing impervious cover is eventually treated by the existing Wet Ponds A & B, this proposed project will provide pretreatment for this existing impervious cover while also providing treatment to the 1.30 acres of new impervious cover. There are 2 proposed outfalls for this project (Appendix A, plan sheets 123-132).

- Outfall 1: Systems A & C (Station 153+00 to 163+00) will not have any increase in impervious cover as proposed activities only include conversion of existing raised medians to pavement. There are no newly proposed treatment BMPs for these limits. The runoff from these limits eventually outfalls in existing Wet Pond A.
- Outfall 2: Systems B, D & E (Station 163+00 to 181+50) will add a new Stormtrooper® stormwater quality interceptor to treat the added impervious cover that will be constructed within these limits (Water Quality Basin A). The runoff from these limits eventually outfalls into existing Wet Pond B.

TCEQ requires that 80% of the increased TSS load generated by the increase in impervious cover be removed. For this project, 1137 pounds of TSS load removal are required, and 5519 pounds are removed by the Stormtrooper® stormwater quality interceptor (4382 pounds of overtreatment).

ATTACHMENT D

Factors Affecting Surface Water Quality

Potential sources of pollution that may reasonably be expected to affect the quality of storm water discharges from the site during construction include:

- Soil erosion due to the clearing of the site.
- Oil, grease, fuel and hydraulic fluid from construction equipment and vehicle drippings.
- Dirt and dust which may fall off construction vehicles.
- Hydrocarbons from asphalt paving operations.
- Miscellaneous trash and litter from construction workers and material wrappings.
- Concrete truck washout.

Potential sources of pollution that may reasonably be expected to affect the quality of storm water discharges from the site during construction include:

- Oil, grease, fuel and hydraulic fluid from construction equipment and vehicle drippings.
- Dirt and dust which may fall off construction vehicles.
- Concrete truck washout.

ATTACHMENT E

BMPs for Upgradient Stormwater

The majority of upgradient flows enter the site from the north flowing across previously developed land (parking lots, landscaping, existing roadways). Flows enter the project storm sewer system through newly constructed storm sewer inlets and existing inlets beyond TxDOT ROW. Drainage from the roadway will be treated using Stormtrooper® stormwater quality interceptors that have been designed according to TCEQ's Technical Guidance Manual RG-348 (2005), with errata and addendum sheets added in 2009 and 2017, respectively.

ATTACHMENT F

BMPs for On-Site Stormwater

Stormtrooper® stormwater quality interceptors will be installed to prevent pollution of surface water, groundwater, or stormwater that originates on-site. These treatment measures have been designed according to TCEQ's Technical Guidance Manual RG-348 (2005), with errata and addendum sheets added in 2009 and 2017, respectively.

ATTACHMENT G

Construction Plans

Please see Appendix A for construction plans including TCEQ construction notes, proposed structural BMP plans/shop drawings, and permanent BMP specifications. Design calculations are also provided within this attachment.

Texas Commission on Environmental Quality
TSS Required Load Reduction Calculations

Project Name: SH 29
Project Location: Georgetown, TX
Date Prepared: 6/10/2025
Prepared For: Michael Curl, PE

Lm = 27.2(AN x P)

where: Lm = Required TSS removal
An = Net increase in impervious area for site
P = Average annual precipitation, inches

Site Data:
County = **Williamson**
Stormwater Quality Structure = **Wet Vault**
Total site area = **40.18** acres
Pre-development impervious area = **22.30** acres
Post-development impervious area = **23.60** acres
Post-development impervious fraction = **0.59**
P = **32** inches

Lm = **1137** lbs. Total Project Required Removal

Drainage Basin	Area	Total Area	Impervious Cover	Impervious Area	Pre-Dev. Impervious Cover	A_n for Drainage Area	Runoff Coef. (C)	Pervious Area	Runoff Coef. (C)	Composite Runoff Coef. (C)	**Effective Area**	Intensity (I)	Calculated Flow (Q)	Required Pollutant Removal	StormTrooper Model	Unit Surface Area	By-Pass Flowrate	Intensity Treated	Fraction of Flow Treated (F)	F/0.9	Overflow Rate (ft/s)	Removal Effeciency	Actual Effeciency	Load Reduction (L_R)
	[ID]	[ac]	[%]	[ac]	[ac]	[ac]		[ac]			[ac]	[in/hr]	[cfs]	L_m in [lbs]	#	(sf)	(cfs)	[in/hr]	Figure 3-11]			[Figure 3-10]		(lbs)
A	1	**20.59**	**49.3%**	10.15	**9.48**	0.671	0.9	10.44	0.03	0.46	0.92	1.1	10.39	621	**110**	913	8.91	0.94	**0.87**	0.97	9.76E-03	**50%**	48%	**5519**

Total TSS Removed by BMP's Annually = 5519
Total Required Reduction (Lm) = 1137
Solids Removed By Other Means = 0
Sufficient Removal = Yes

STORMTROOPER

Model	S.A.	By-Pass	E.A. @ 80%
5	100	420	< 0.13
10	149	600	0.14 - 0.20
20	248	1000	0.21 - 0.33
25	369	1440	0.34 - 0.50
40	588	2250	0.51 - 0.79
70	730	2720	0.80 - 0.98
110	913	4000	0.99 - 1.23

E.A. = (Imp. x 0.9 + Perv. x 0.03)
100% Impervious Acres Treated/Single Unit
0.14 Acres
0.22 Acres
0.37 Acres
0.56 Acres
0.88 Acres
1.09 Acres
1.37 Acres

Texas Commission on Environmental Quality
TSS Removal Calculations per RG-348 (Addendum Item 3.4.20)

AREA 1	DRAINAGE BASIN A

STEP ONE: Required TSS Removal

EQUATION 3.3

$L_m = 28.93(A_n \times P)$ (Georgetown Requires 85% TSS Removal)

L_m = Required TSS Removal (pounds)

A_n = Net Increase in Impervius Area (acres)

P = Average Annual Precipitation (inches)

Drainage Basin =	20.59	Acres
Pre-Dev. Imp. Area =	9.48	Acres
Post-Dev. Imp. Area =	0.67	
Pervious Area =	10.44	Acres
P =	32	Inches
L_m =	621	Lbs

STEP TWO: Select an Appropriate BMP

Effective Area =	0.92	EA = (Ai x 0.9) + (Ap x 0.03)
StormTrooper SWAQ_	110	
Unit Surface Area =	913	Sq. Ft.

EQUATION 3.4

Q = CiA, where:

C =	0.46	Composite Run-Off Coefficient
i =	1.10	Stormwater Quality Intensity
A =	20.59	Drainage Basin Acreage
Q =	10.39	Required Treatment Flow

EQUATION 3.5

V_{OR} = Q/A, where:

Q =	10.39	Required Treatment Flow
A =	913	Unit Surface Area
V_{OR} =	9.76E-03	Overflow Rate
BMP Effeciency =	50%	

STEP THREE: Calculate Fraction of Annual Runoff to be Treated

Unit By-Pass Flowrate =	8.91	cfs
Treated Intensity =	0.94	in/hr
Annual Volume Treated =	87%	Volume of Run-Off Entering Unit
Treatment Reduction =	0.97	BMP Effeciency Reduction Factor
Actual BMP Effeciency =	50%	

STEP FOUR: Calculate TSS Load Removed by BMPs

EQUATION 3.8

$L_r = (\text{BMP Efficiency}) \times P \times (A_i \times 34.6 + A_p \times 0.54)$

L_r = Load Removed by BMP

BMP Efficiency = TSS Removal Efficiency

A_i = Impervious Tributary Area to the BMP (ac

A_p = Pervious Tributary Area to the BMP (ac

A_i =	10.15
A_p =	10.44
L_r =	**5519 lbs**

TOTAL SITE DETAILS

Project Name:	SH 29
Project Location:	Georgetown, TX
Date Prepared:	6/10/2025
Prepared By:	Michael Curl, PE
Total Project Area to be Treated =	40.18
Pre-Development Impervious Area =	22.30
Post-Development Impervious Area =	23.60
Composite Run-Off Coefficient =	0.59
Required TSS Removal L_m =	**1137**
County =	Williamson

STORMTROOPER	
Model	**E.A. @ 80%**
5	< 0.13
10	0.14 - 0.20
20	0.21 - 0.33
25	0.34 - 0.50
40	0.51 - 0.79
70	0.80 - 0.98
110	0.99 - 1.23

ATTACHMENT H

Docusign Envelope ID: 6F1363AC-6D18-4E12-8685-4EF0CDAEFB59

Inspection, Maintenance, Repair, and Retrofit Plan
SH 29, Georgetown, TX, Williamson County

These maintenance guidelines were prepared at the request of the Texas Commission on Environmental Quality (TCEQ) with regard to their approval of an Edwards Aquifer Protection Plan for the above referenced project. These guidelines apply to the portions of the project limits that are subject to the Edwards Aquifer Rules.

Stormtrooper® Stormwater Quality Interceptors Guidelines
Description: Furnish maintenance services on Stormtroopers®.

Equipment: Furnish all equipment, tools, and machinery necessary for maintenance. Equipment must meet all federal, state, and local regulations and be approved before use. Storage of equipment, tools, or machinery within the roadway right-of-way is not permitted.

Work Methods: Provide the following maintenance services quarterly, unless otherwise shown on the plans. Perform work in accordance with all federal, state, and local regulations.

A. Site Inspection: Observation and maintenance is best accomplished during non-flow conditions, 3-4 days after the most recent rain.
B. Maintenance Method:
    a) Remove interceptor covers or open hatchway to observe conditions. Remove hatchway safety net (“EnterNet”). Observe for trash and debris and remove if necessary. This is the most important maintenance requirement. If absorbent pillows are utilized, observe their condition. A uniform browning or gray color of the pillow means they should be replaced. Observe baffle debris screen and clean if necessary.
    b) Coalescing plates are self-cleaning and seldom require maintenance unless damaged. Do not walk on or stand on plate packs. Call ParkUSA (888-611-PARK) for replacement parts.
    c) Check the depth (level) of oil and sediment with a tank sampler device designed for this purpose.

Maintenance Table: Recommended maximum capacities of oil and sediment.

Recommended Maximum Maintenance Levels		
Model Number	Oil Depth (inches)	Sediment Depth (inches)
SWAQ-05	12"	12"
SWAQ-10	12"	12"
SWAQ-20	12"	12"
SWAQ-25	12"	12"
SWAQ-40	12"	12"
SWAQ-70	12"	12"
SWAQ-110	12"	12"

Docusign Envelope ID: 6F1363AC-6D18-4E12-8685-4EF0CDAEFB59

Measurement: This item will be measured as follows:

A. Site Inspection: Measured by each site inspection completed at each treatment system location.
B. Trash, Debris, Oil, and Sediment Removal: Measured by each cycle of removal at each treatment system location.

Record Keeping: Maintenance supervisor to determine the best method of BMP maintenance record keeping. It is recommended to keep a log of all maintenance the BMPs undergo.

Maintenance Contract
The Transportation Operations Manager may be contact for questions or concerns pertaining to the maintenance of the facility. The current Transportation Operations Manager whose maintenance section is in charge of this project area may be reached through the following contact:

Douglas Havins
Texas Department of Transportation
2727 S Austin Ave
Georgetown, TX, 78626
Phone: 512-930-4700

I understand that I am responsible for maintenance of the Permanent Pollution Abatement Measures included in this project until such time as the maintenance obligation is either assumed in writing by another entity having ownership or control of the property or ownership is transferred.

I, the owner, have read and understand the requirements of the attached Maintenance Plan and Schedule.

DocuSigned by:
Douglas Havins
F0B48773AC4A416...

Douglas Havins
(signature)

9/16/2024
Date

ATTACHMENT J

Measures for Minimizing Surface Stream Contamination

Measures for minimizing surface stream contamination are as follows:

- **Stormtrooper® stormwater quality**

Runoff from this project will generally collect in the proposed storm sewer system and shall pass through a Stormtrooper® on its way offsite. The Stormtrooper® shall remove greater than 80% of the increased TSS load from this project. All project runoff eventually outfalls into either of the two wet ponds that exist today on the south side of the Wolf Ranch Town Center development.

Permanent Spill Measures

In the event of a spill on site post construction, the contractor will be required to notify the owner, who will in turn contact TCEQ to notify them in the event of a spill. Additional notifications as required by the type and amount of spill will be conducted by the owner or owner's representative.

- Contractor shall take action to contain the spill. For small spills, Contractor may use a rag to clean up a spill. For larger spills, Contractor may use sand or other absorbent material stockpiled on site to absorb larger spills. Absorbent material should be spread over the spill area to absorb the spilled product. Contractor may close a lane using applicable Traffic Control standards for the safety of the maintenance crew.
- In the event of an uncontained discharge the contractor shall utilize onsite equipment to construct berms downgradient of the spill with sand or other absorbent material to contain and absorb the spilled product.
- Sand or material used to contain the spill should be collected and stored in such a way so as not to continue to affect additional ground. Once the spill has been contained, collected material should be placed on poly or plastic sheeting until removed from the site. In the event of potential rainfall, the material should be covered with poly or plastic sheeting.

For significant or hazardous spills that are in reportable quantities:

- The owner shall notify the TCEQ by telephone as soon as possible and within 24 hours at (512)339-2929 (Austin) between 8 AM and 5 PM. After hours, contact the Environmental Release Hotline at 1-800-832-8224.
- For spills of federal reportable quantities, in conformance with the requirements in 40 CFR parts 110,119, and 302, owner will notify the National Response Center at (800) 424-8802.
- Notification should first be made by telephone and followed up with a written report.
- The services of a spill contractor / Haz-Mat team should be obtained immediately. Owner should not clean up until appropriate & qualified staff(s) have arrived at the job site.
- Other agencies which may need to be consulted include, but not limited to, the City Police Department, County Sheriff Office at (512) 864-8282, Fire Departments, County Emergency Services (911), County Environmental Health Department at (512) 248-7620, etc.

Additional guidance can be obtained from TCEQ's Technical Guidance Manual (TGM) RG-348 (2005) Section 1.4.16. Contractor shall review this section.

ATTACHMENT K

Volume and Character of Stormwater

The runoff coefficient weighted value for the project area prior to development is 0.56, and after construction, it will increase to 0.59 (values are based on the Rational Method using runoff coefficients per TxDOT's Bridge Division Hydraulic Manual).

Pre-Construction			Post-Construction			Aggregate	
Area	$C_{existing}$	Q_{100}	Area	$C_{proposed}$	Q_{100}	C increase	Q increase
acres	-	CFS	acres	-	CFS	-	CFS
40.18	0.56	134.91	40.18	0.59	142.77	0.03	7.86

GEOLOGICAL ASSESSMENT

Geologic Assessment

Texas Commission on Environmental Quality

For Regulated Activities on The Edwards Aquifer Recharge/transition Zones and Relating to 30 TAC §213.5(b)(3), Effective June 1, 1999

To ensure that the application is administratively complete, confirm that all fields in the form are complete, verify that all requested information is provided, consistently reference the same site and contact person in all forms in the application, and ensure forms are signed by the appropriate party.

Note: Including all the information requested in the form and attachments contributes to more streamlined technical reviews.

Signature

To the best of my knowledge, the responses to this form accurately reflect all information requested concerning the proposed regulated activities and methods to protect the Edwards Aquifer. My signature certifies that I am qualified as a geologist as defined by 30 TAC Chapter 213.

Print Name of Geologist: Kevin Denson, P.G. Telephone: 512 442-1122

Date: November 29, 2023 Fax: _____

Representing: Terracon Consultants, Inc. (Name of Company and TBPG or TBPE registration number)

Signature of Geologist:



Regulated Entity Name: SH-29 Widening, west of IH-35, Georgetown, Williamson County, Texas

Project Information

1. Date(s) Geologic Assessment was performed: August 30, 2023
2. Type of Project:
   - ☒ WPAP
   - ☐ SCS
   - ☐ AST
   - ☐ UST
3. Location of Project:
   - ☒ Recharge Zone
   - ☐ Transition Zone
   - ☐ Contributing Zone within the Transition Zone

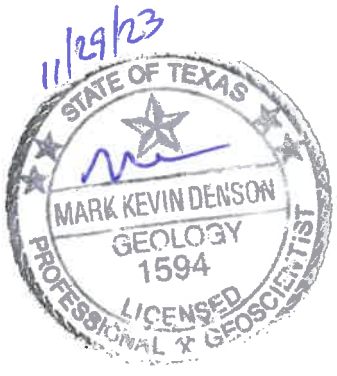

4. ☒ **Attachment A - Geologic Assessment Table**. Completed Geologic Assessment Table (Form TCEQ-0585-Table) is attached.

5. ☒ Soil cover on the project site is summarized in the table below and uses the SCS Hydrologic Soil Groups* (Urban Hydrology for Small Watersheds, Technical Release No. 55, Appendix A, Soil Conservation Service, 1986). If there is more than one soil type on the project site, show each soil type on the site Geologic Map or a separate soils map.

Table 1 - Soil Units, Infiltration Characteristics and Thickness

Soil Name	Group*	Thickness(feet)
EeB	D	0-1
GsB	D	2-3

** Soil Group Definitions (Abbreviated)*

A. Soils having a high infiltration rate when thoroughly wetted.

B. Soils having a moderate infiltration rate when thoroughly wetted.

C. Soils having a slow infiltration rate when thoroughly wetted.

D. Soils having a very slow infiltration rate when thoroughly wetted.

6. ☒ **Attachment B – Stratigraphic Column**. A stratigraphic column showing formations, members, and thicknesses is attached. The outcropping unit, if present, should be at the top of the stratigraphic column. Otherwise, the uppermost unit should be at the top of the stratigraphic column.

7. ☒ **Attachment C – Site Geology**. A narrative description of the site specific geology including any features identified in the Geologic Assessment Table, a discussion of the potential for fluid movement to the Edwards Aquifer, stratigraphy, structure(s), and karst characteristics is attached.

8. ☒ **Attachment D – Site Geologic Map(s)**. The Site Geologic Map must be the same scale as the applicant's Site Plan. The minimum scale is 1": 400'

   Applicant's Site Plan Scale: 1" = _'
   Site Geologic Map Scale: 1" = 30'
   Site Soils Map Scale (if more than 1 soil type): 1" = 500'

9. Method of collecting positional data:

   ☒ Global Positioning System (GPS) technology.
   ☐ Other method(s). Please describe method of data collection: _____

10. ☒ The project site and boundaries are clearly shown and labeled on the Site Geologic Map.

11. ☒ Surface geologic units are shown and labeled on the Site Geologic Map.

12. ☐ Geologic or manmade features were discovered on the project site during the field investigation. They are shown and labeled on the Site Geologic Map and are described in the attached Geologic Assessment Table.

    ☒ Geologic or manmade features were not discovered on the project site during the field investigation.

13. ☒ The Recharge Zone boundary is shown and labeled, if appropriate.

14. All known wells (test holes, water, oil, unplugged, capped and/or abandoned, etc.): If applicable, the information must agree with Item No. 20 of the WPAP Application Section.

    ☐ There are _____ (#) wells present on the project site and the locations are shown and labeled. (Check all of the following that apply.)
    - ☐ The wells are not in use and have been properly abandoned.
    - ☐ The wells are not in use and will be properly abandoned.
    - ☐ The wells are in use and comply with 16 TAC Chapter 76.

    ☒ There are no wells or test holes of any kind known to exist on the project site.

Administrative Information

15. ☒ Submit one (1) original and one (1) copy of the application, plus additional copies as needed for each affected incorporated city, groundwater conservation district, and county in which the project will be located. The TCEQ will distribute the additional copies to these jurisdictions. The copies must be submitted to the appropriate regional office.

NO FEATURES OBSERVED Attachment A

GEOLOGIC ASSESSMENT TABLE

PROJECT NAME: SH-26 Widening, SH-29 West of IH-35, Georgetown, Texas

LOCATION			FEATURE CHARACTERISTICS											EVALUATION			PHYSICAL SETTING		
1A	1B *	1C*	2A	2B	3	4			5	5A	6	7	8A	8B	9	10		11	12
FEATURE ID	LATITUDE	LONGITUDE	FEATURE TYPE	POINTS	FORMATION	DIMENSIONS (FEET)			TREND (DEGREES)	DOM	DENSITY (NO/FT)	APERTURE (FEET)	INFILL	RELATIVE INFILTRATION RATE	TOTAL	SENSITIVITY		CATCHMENT AREA (ACRES)	TOPOGRAPHY
						X	Y	Z		10						<40	>40	<1.6	>1.6	

* DATUM NAD27

2A TYPE	TYPE	2B POINTS
C	Cave	30
SC	Solution cavity	20
SF	Solution-enlarged fracture(s)	20
F	Fault	20
O	Other natural bedrock features	5
MB	Manmade feature in bedrock	30
SW	Swallow hole	30
SH	Sinkhole	20
CD	Non-karst closed depression	5
Z	Zone, clustered or aligned features	30

8A INFILLING	
N	None, exposed bedrock
C	Coarse - cobbles, breakdown, sand, gravel
O	Loose or soft mud or soil, organics, leaves, sticks, dark colors
F	Fines, compacted clay-rich sediment, soil profile, gray or red colors
V	Vegetation. Give details in narrative description
FS	Flowstone, cements, cave deposits
X	Other materials

12 TOPOGRAPHY
Cliff, Hilltop, Hillside, Drainage, Floodplain, Streambed

I have read, I understood, and I have followed the Texas Natural Resource Conservation Commission's Instructions to Geologists. The information presented here complies with that document and is a true representation of the conditions observed in the field.

My signature certifies that I am qualified as a geologist as defined by 30 TAC 213

Date 11/29/23

TNRCC-0585-Table (Rev. 5-1-02)

Sheet 1 of 1

ATTACHMENT B

Stratigraphic Column
SH-29 Widening
SH-29 West of IH-35
Georgetown, Texas

HYDROGEOLOGIC SUBDIVISION	FORMATION	THICKNESS (feet)	LITHOLOGY
Edwards Aquifer	Edwards Formation	60	Mudstone to packstone, crystalline limestone, wackestone

Source: Senger, Collins and Kreitler, 1990

11/29/23

STATE OF TEXAS
MARK KEVIN DENSON
GEOLOGY
1594
LICENSED
PROFESSIONAL GEOSCIENTIST

Terracon

ATTACHMENT C

SITE-SPECIFIC GEOLOGY

The Geologic Assessment (GA) of the SH-29 Widening site was conducted by Kevin Denson, P.G., of Terracon Consultants, Inc. on August 30, 2023. The site consists of an approximate 3,200 linear foot section of State Highway 29 in Georgetown, Williamson County, Texas. Specifically, the site extends from west of IH-35 to 0.161 miles west of Wolf Ranch Parkway. Exhibit 1 (attached) is a site location map depicting the site in relation to the surrounding area. The areas immediately surrounding the site are commercial properties. Site elevation ranges from about 832 feet above mean sea level (msl) to about 797 feet msl and slopes gently to the east.

The surficial geologic unit present at the site has been identified as the Edwards Limestone. Exhibit 2 (attached) is a geologic map of the site. The Edwards consists of massive to thin bedded limestones and dolostones. The formation is characterized by honeycomb textures, collapse breccias and cavern systems, which account for most of the significant porosity within the strata that compose most of the aquifer. The site is located entirely within the recharge zone of the Edwards Aquifer and the recharge zone boundary is located approximately 1,000 feet south of the site, corresponding to the location of the San Gabriel River. Attachment B is a stratigraphic column prepared for the site. Exposure of this unit onsite is obscured by the existing roadway and commercial development. No faulting was observed on the site and the nearest mapped fault is located approximately 2,000 feet east of the site. The fault, which trends toward the northeast, is associated with the Balcones Fault zone which represents the dominant structural trend in the vicinity of the site. The completed Geologic Assessment form is attached as Attachment A.

No sensitive geologic features were observed on the site. Due to the lack of sensitive recharge features and the presence of impermeable cover over much of the site, the potential for fluid movement to the Edwards aquifer beneath the site is considered low.

No streams or springs were observed on the site. A review of the site maps contained in the City of Georgetown Ordinance 2015-14 indicated there are no known springs occupied by the Georgetown Salamander on the site, and the nearest known occupied spring is located approximately two miles west-southwest of the site (Shadow Canyon).

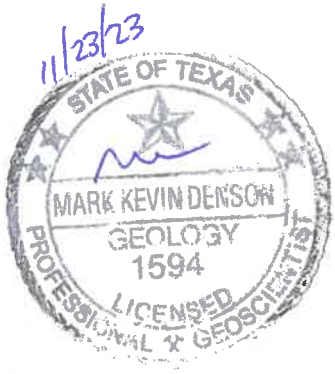

UNITED STATES – DEPARTMENT OF THE INTERIOR – GEOLOGICAL SURVEY

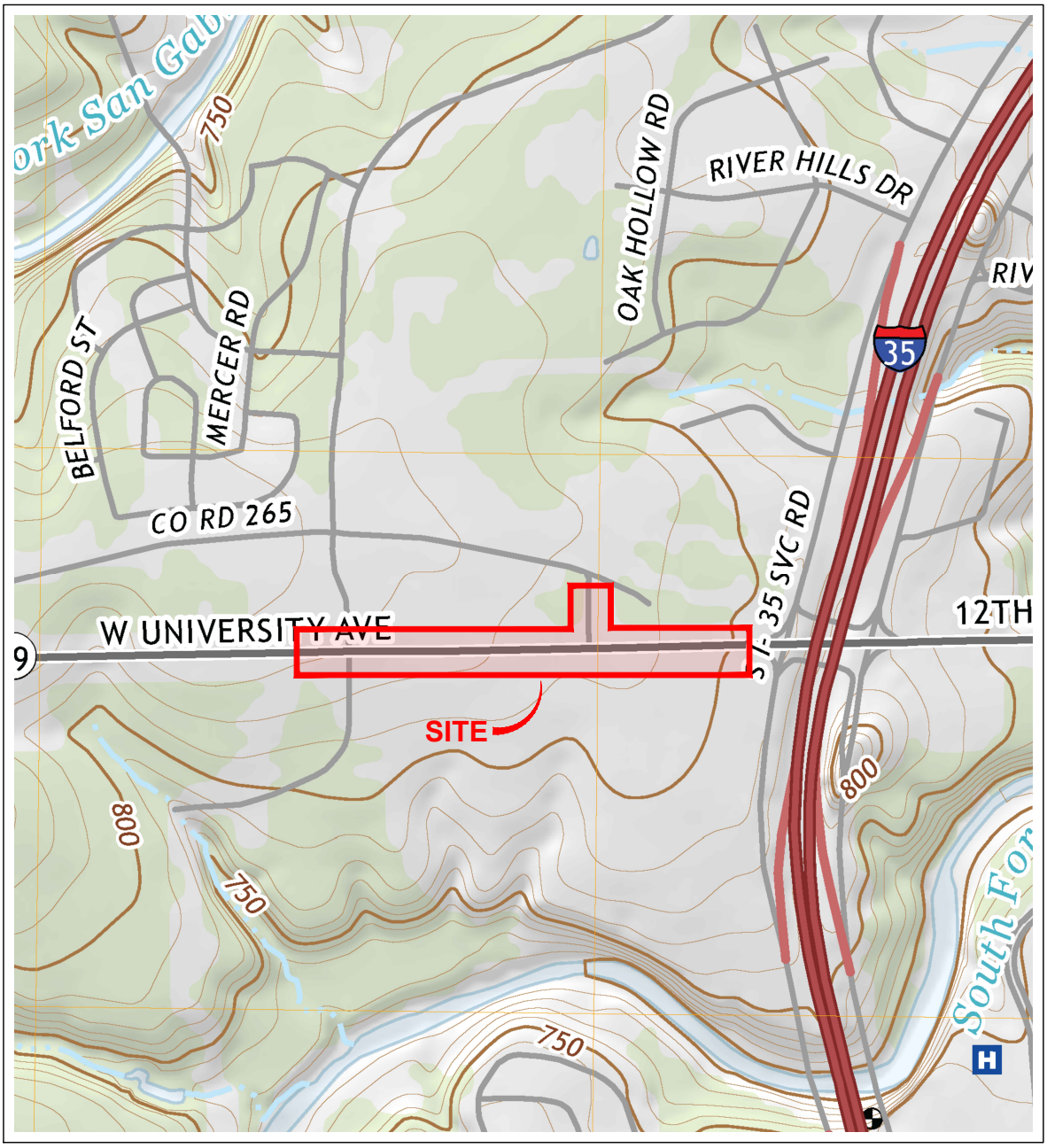

SCALE 1:12,000

KILOMETERS .5 .25 0 .5 1

METERS 500 0 500 1000

MILES .5 .25 0 .5

500 0 500 1000 1500 2000 2500 3000 3500 4000 4500 5000

CONTOUR INTERVAL 10 FEET

NATIONAL GEODETIC VERTICAL DATUM OF 1988

Georgetown, Texas

2019

7.5 MINUTE SERIES (TOPOGRAPHIC)

Project Mngr: KD	Project No. 96237226	Terracon Consulting Engineers and Scientists	TOPOGRAPHIC MAP
Drawn By: ATX Drafting	Scale: AS SHOWN	5307 INDUSTRIAL OAKS BLVD. - #160 AUSTIN, TX 78735	SH-29 Widening
Checked By: KD	File No. 96237226	PH. (512) 442-1122 FAX (512) 442-1181	State Highway 29
Approved By: KD	Date: Nov 22, 2023		Georgetown, Williamson County, Texas

EXHIBIT 1

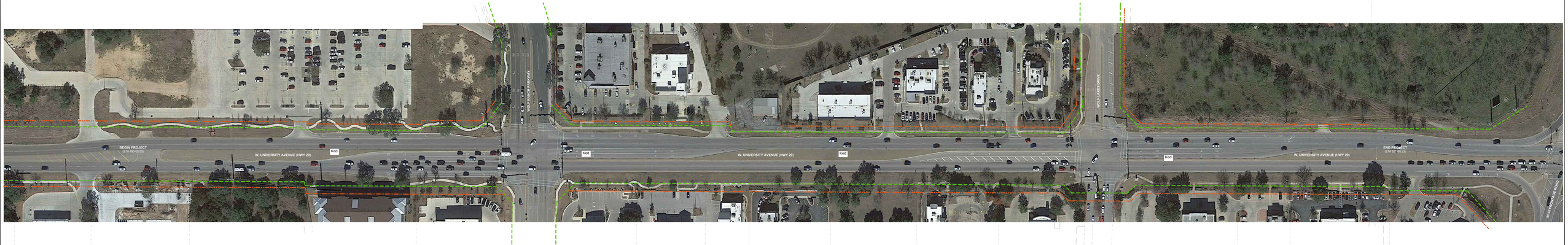

N

0 1 2 3 4 5
APPROXIMATE SCALE IN FEET

LEGEND

Existing Right-Of-Way

Proposed Right-Of-Way

Ked Edwards Formation

Date: 06	Date: 06/15/2020	Terracon	SITE DIAGRAM SH-29 Widening Mile Marker 7 Georgetown Williamson County, Texas	Sheet 2
Scale: 1:2,000	Date: 06/15/2020	Consulting Engineers and Scientists Corporate Office: 4201 Lyndon Street Lyndon, Kansas 66101		
Scale: 1:2,000	Date: 06/15/2020			
Scale: 1:2,000	Date: 06/15/2020			

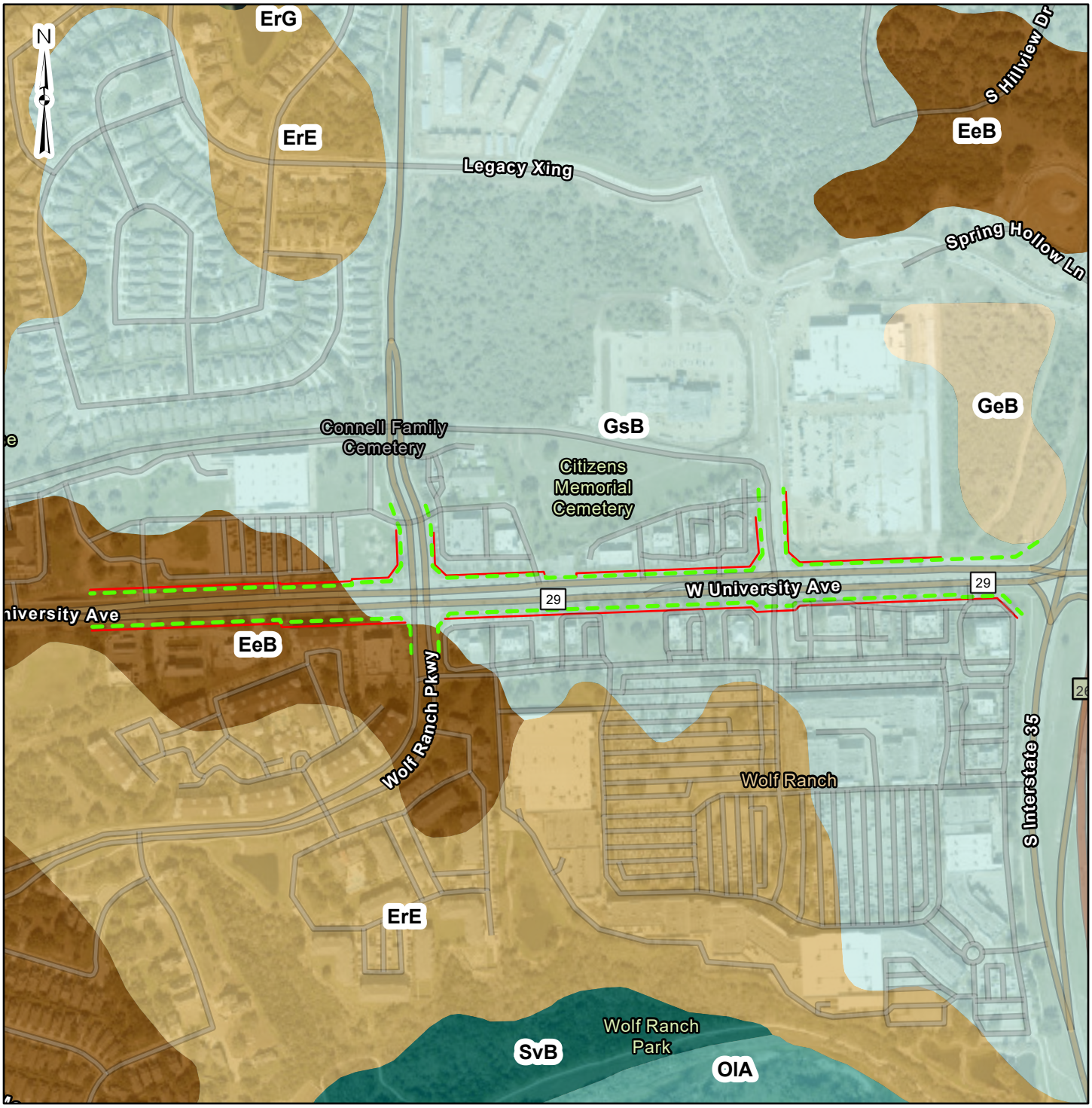

Proposed Right-Of-Way

Existing Right-of-Way

USDA WSS Soil Map Units

- Eckrant stony clay (EeB)
- Eckrant-Rock outcrop association (ErE)
- Georgetown clay loam (GeB)
- Georgetown stony clay (GsB)
- Oakalla soils (OlA)
- Sunev silty clay loam (SvB)

Feet

0 125 250 500

DATA SOURCES:
Esri Community Maps Contributors, Baylor University, County of Williamson, Texas Parks & Wildlife, © OpenStreetMap, Microsoft, CONANP, Esri, HERE, Garmin, SafeGraph, GeoTechnologies, Inc, METI/NASA, USGS,

Project No.:	96237226
Date:	Nov 2023
Drawn By:	RC
Reviewed By:	KD

Terracon
5307 Industrial Oaks Blvd. - #160 Austin, TX 78735
PH. (512) 442-1122 terracon.com

Web Soil Survey Soil Map Units

SH-29 Widening

State Highway 29
Georgetown, Williamson County, Texas

Exhibit

3.0

N:\GIS\Projects\2023\96237226\96237226.aprx

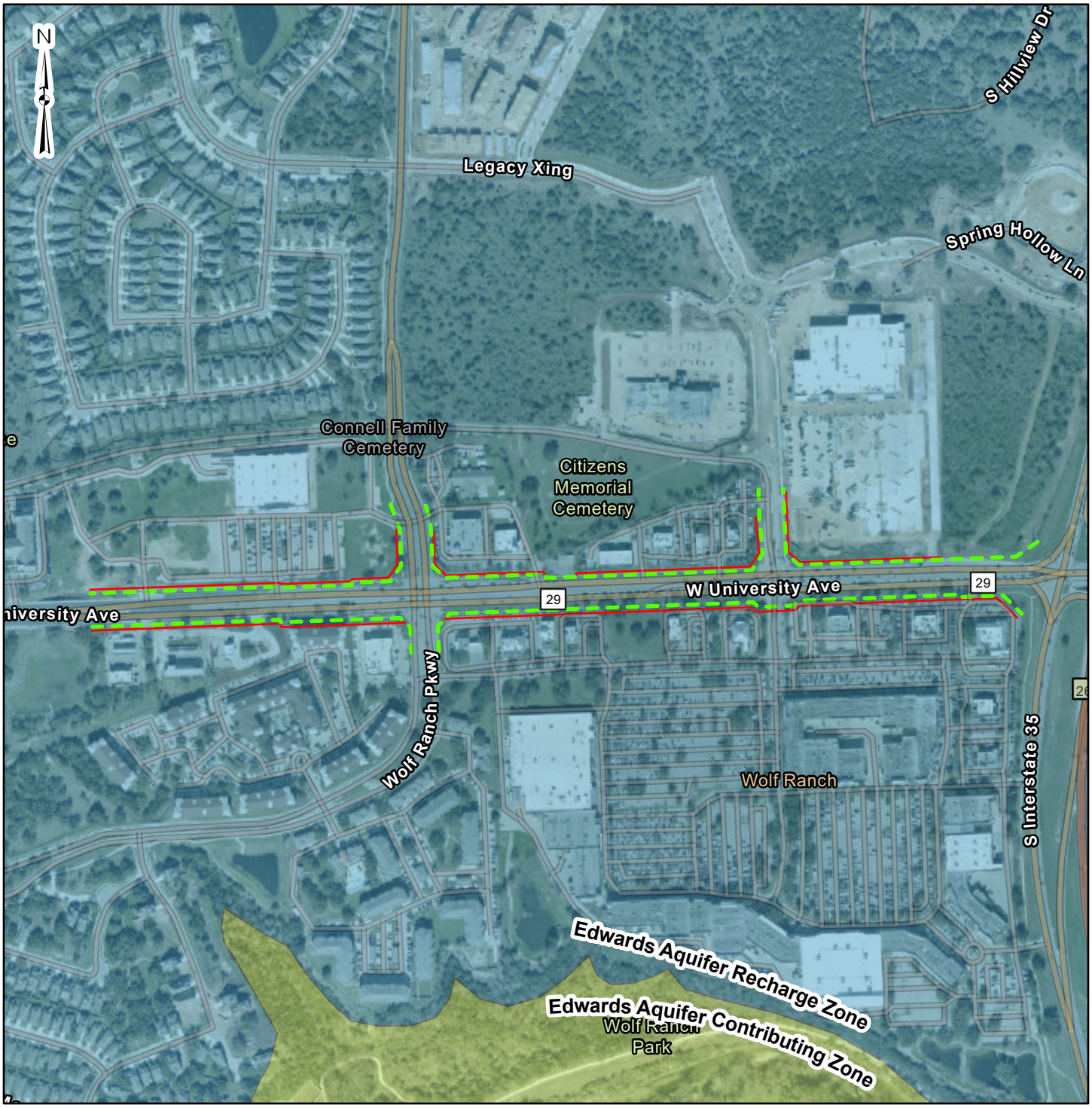

Proposed Right-Of-Way

Existing Right-of-Way

TCEQ Edwards Aquifer Zone Data

Edwards Aquifer Contributing Zone

Edwards Aquifer Recharge Zone

Feet

0 125 250 500

DATA SOURCES:
ESRI WMS - World Aerial Imagery, OpenStreetMap, FEMA
Firm Panel: 48491C0610F, effective on 12/20/2019

Project No.:	96237226
Date:	Nov 2023
Drawn By:	RC
Reviewed By:	KD

Terracon

5307 Industrial Oaks Blvd. - #160 Austin, TX 78735

PH. (512) 442-1122 terracon.com

Edwards Aquifer Zones

SH-29 Widening

State Highway 29
Georgetown, Williamson County, Texas

Exhibit

4.0

N:\GIS\Projects\2023\96237226\96237226.aprx

TEMPORARY STORMWATER

Temporary Stormwater Section

Texas Commission on Environmental Quality

for Regulated Activities on the Edwards Aquifer Recharge Zone and Relating to 30 TAC §213.5(b)(4)(A), (B), (D)(I) and (G); Effective June 1, 1999

To ensure that the application is administratively complete, confirm that all fields in the form are complete, verify that all requested information is provided, consistently reference the same site and contact person in all forms in the application, and ensure forms are signed by the appropriate party.

Note: Including all the information requested in the form and attachments contributes to more streamlined technical reviews.

Signature

To the best of my knowledge, the responses to this form accurately reflect all information requested concerning the proposed regulated activities and methods to protect the Edwards Aquifer. This **Temporary Stormwater Section** is hereby submitted for TCEQ review and executive director approval. The application was prepared by:

Print Name of Customer/Agent: Michael Curl

Date: 3/5/2026

Signature of Customer/Agent:

Michael Curl

Regulated Entity Name: SH 29 from Wolf Ranch Parkway to IH-35 SBFR

Project Information

Potential Sources of Contamination

Examples: Fuel storage and use, chemical storage and use, use of asphaltic products, construction vehicles tracking onto public roads, and existing solid waste.

1. Fuels for construction equipment and hazardous substances which will be used during construction:

   ☐ The following fuels and/or hazardous substances will be stored on the site: N/A

   These fuels and/or hazardous substances will be stored in:

   ☐ Aboveground storage tanks with a cumulative storage capacity of less than 250 gallons will be stored on the site for less than one (1) year.

☐ Aboveground storage tanks with a cumulative storage capacity between 250 gallons and 499 gallons will be stored on the site for less than one (1) year.

☐ Aboveground storage tanks with a cumulative storage capacity of 500 gallons or more will be stored on the site. An Aboveground Storage Tank Facility Plan application must be submitted to the appropriate regional office of the TCEQ prior to moving the tanks onto the project.

☒ Fuels and hazardous substances will not be stored on the site.

2. ☒ **Attachment A - Spill Response Actions**. A site specific description of the measures to be taken to contain any spill of hydrocarbons or hazardous substances is attached.

3. ☒ Temporary aboveground storage tank systems of 250 gallons or more cumulative storage capacity must be located a minimum horizontal distance of 150 feet from any domestic, industrial, irrigation, or public water supply well, or other sensitive feature.

4. ☒ **Attachment B - Potential Sources of Contamination**. A description of any activities or processes which may be a potential source of contamination affecting surface water quality is attached.

Sequence of Construction

5. ☒ **Attachment C - Sequence of Major Activities**. A description of the sequence of major activities which will disturb soils for major portions of the site (grubbing, excavation, grading, utilities, and infrastructure installation) is attached.

   ☒ For each activity described, an estimate (in acres) of the total area of the site to be disturbed by each activity is given.

   ☒ For each activity described, include a description of appropriate temporary control measures and the general timing (or sequence) during the construction process that the measures will be implemented.

6. ☒ Name the receiving water(s) at or near the site which will be disturbed or which will receive discharges from disturbed areas of the project: South Fork San Gabriel River

Temporary Best Management Practices (TBMPs)

Erosion control examples: tree protection, interceptor swales, level spreaders, outlet stabilization, blankets or matting, mulch, and sod. Sediment control examples: stabilized construction exit, silt fence, filter dikes, rock berms, buffer strips, sediment traps, and sediment basins. Please refer to the Technical Guidance Manual for guidelines and specifications. All structural BMPs must be shown on the site plan.

7. ☒ **Attachment D – Temporary Best Management Practices and Measures**. TBMPs and measures will prevent pollution of surface water, groundwater, and stormwater. The construction-phase BMPs for erosion and sediment controls have been designed to retain sediment on site to the extent practicable. The following information is attached:

☒ A description of how BMPs and measures will prevent pollution of surface water, groundwater or stormwater that originates upgradient from the site and flows across the site.

☒ A description of how BMPs and measures will prevent pollution of surface water or groundwater that originates on-site or flows off site, including pollution caused by contaminated stormwater runoff from the site.

☒ A description of how BMPs and measures will prevent pollutants from entering surface streams, sensitive features, or the aquifer.

☒ A description of how, to the maximum extent practicable, BMPs and measures will maintain flow to naturally-occurring sensitive features identified in either the geologic assessment, TCEQ inspections, or during excavation, blasting, or construction.

8. ☒ The temporary sealing of a naturally-occurring sensitive feature which accepts recharge to the Edwards Aquifer as a temporary pollution abatement measure during active construction should be avoided.

☐ **Attachment E - Request to Temporarily Seal a Feature**. A request to temporarily seal a feature is attached. The request includes justification as to why no reasonable and practicable alternative exists for each feature.

☒ There will be no temporary sealing of naturally-occurring sensitive features on the site.

9. ☒ **Attachment F - Structural Practices**. A description of the structural practices that will be used to divert flows away from exposed soils, to store flows, or to otherwise limit runoff discharge of pollutants from exposed areas of the site is attached. Placement of structural practices in floodplains has been avoided.

10. ☒ **Attachment G - Drainage Area Map**. A drainage area map supporting the following requirements is attached:

☐ For areas that will have more than 10 acres within a common drainage area disturbed at one time, a sediment basin will be provided.

☐ For areas that will have more than 10 acres within a common drainage area disturbed at one time, a smaller sediment basin and/or sediment trap(s) will be used.

☐ For areas that will have more than 10 acres within a common drainage area disturbed at one time, a sediment basin or other equivalent controls are not attainable, but other TBMPs and measures will be used in combination to protect down slope and side slope boundaries of the construction area.

☐ There are no areas greater than 10 acres within a common drainage area that will be disturbed at one time. A smaller sediment basin and/or sediment trap(s) will be used in combination with other erosion and sediment controls within each disturbed drainage area.

☒ There are no areas greater than 10 acres within a common drainage area that will be disturbed at one time. Erosion and sediment controls other than sediment basins or sediment traps within each disturbed drainage area will be used.

11. ☐ **Attachment H - Temporary Sediment Pond(s) Plans and Calculations**. Temporary sediment pond or basin construction plans and design calculations for a proposed temporary BMP or measure have been prepared by or under the direct supervision of a Texas Licensed Professional Engineer. All construction plans and design information must be signed, sealed, and dated by the Texas Licensed Professional Engineer. Construction plans for the proposed temporary BMPs and measures are attached.

☒ N/A

12. ☒ **Attachment I - Inspection and Maintenance for BMPs.** A plan for the inspection of each temporary BMP(s) and measure(s) and for their timely maintenance, repairs, and, if necessary, retrofit is attached. A description of the documentation procedures, recordkeeping practices, and inspection frequency are included in the plan and are specific to the site and/or BMP.

13. ☒ All control measures must be properly selected, installed, and maintained in accordance with the manufacturer's specifications and good engineering practices. If periodic inspections by the applicant or the executive director, or other information indicate a control has been used inappropriately, or incorrectly, the applicant must replace or modify the control for site situations.

14. ☒ If sediment escapes the construction site, off-site accumulations of sediment must be removed at a frequency sufficient to minimize offsite impacts to water quality (e.g., fugitive sediment in street being washed into surface streams or sensitive features by the next rain).

15. ☒ Sediment must be removed from sediment traps or sedimentation ponds not later than when design capacity has been reduced by 50%. A permanent stake will be provided that can indicate when the sediment occupies 50% of the basin volume.

16. ☒ Litter, construction debris, and construction chemicals exposed to stormwater shall be prevented from becoming a pollutant source for stormwater discharges (e.g., screening outfalls, picked up daily).

Soil Stabilization Practices

Examples: establishment of temporary vegetation, establishment of permanent vegetation, mulching, geotextiles, sod stabilization, vegetative buffer strips, protection of trees, or preservation of mature vegetation.

17. ☒ **Attachment J - Schedule of Interim and Permanent Soil Stabilization Practices**. A schedule of the interim and permanent soil stabilization practices for the site is attached.

18. ☒ Records must be kept at the site of the dates when major grading activities occur, the dates when construction activities temporarily or permanently cease on a portion of the site, and the dates when stabilization measures are initiated.

19. ☒ Stabilization practices must be initiated as soon as practicable where construction activities have temporarily or permanently ceased.

Administrative Information

20. ☒ All structural controls will be inspected and maintained according to the submitted and approved operation and maintenance plan for the project.

21. ☒ If any geologic or manmade features, such as caves, faults, sinkholes, etc., are discovered, all regulated activities near the feature will be immediately suspended. The appropriate TCEQ Regional Office shall be immediately notified. Regulated activities must cease and not continue until the TCEQ has reviewed and approved the methods proposed to protect the aquifer from any adverse impacts.

22. ☒ Silt fences, diversion berms, and other temporary erosion and sediment controls will be constructed and maintained as appropriate to prevent pollutants from entering sensitive features discovered during construction.

ATTACHMENT A

Spill Response Actions

In the event of an accidental spill:

- Contractor shall take action to contain spill. Contractor may use sand or other absorbent material stockpiled on site to absorb spill. Absorbent material should be spread over the spill area to absorb the spilled product.
- In the event of an uncontained discharge the contractor shall utilize onsite equipment to construct berms downgradient of the spill with sand or other absorbent material to contain and absorb the spilled product.
- Sand or material used to contain the spill should be collected and stored in such a way so as not to continue to affect additional ground. Once the spill has been contained, collected material should be placed on poly or plastic sheeting until removed from the site. In the event of potential rainfall, the material should be covered with poly or plastic sheeting.
- The contractor will be required to notify the owner, who will in turn contact TCEQ to notify them in the event of a spill. Additional notifications as required by the type and amount of spill will be conducted by the owner or owner's representative.
- The contractor will be required to report significant or hazardous spills in reportable quantities to:
    - The National Response Center at (800) 424-8802
    - The Edwards Aquifer Authority at (210) 222-2204
    - The TCEQ Regional Office (512) 339-2929 (if during business hours: 8 AM to 5 PM) or
    - The State Emergency Response Center (800) 832-8224 (if after hours)
- Contaminated soils will be sampled for waste characterization. When the analysis results are known the contaminated soil will be removed from the site and disposed in a permitted landfill in accordance with applicable regulations.

Additional guidance can be obtained from TCEQ's Technical Guidance Manual (TGM) RG-348 (2005) Section 1.4.16. Contractor shall review this section.

ATTACHMENT B

Potential Sources of Contamination

Potential sources of contamination include:

- Oil, grease, fuel and hydraulic fluid from construction equipment and vehicle drippings.
- Dirt and dust which may fall off construction vehicles.
- Hydrocarbons from asphalt paving operations.
- Miscellaneous trash and litter from construction workers and material wrappings.
- Concrete truck washout.

ATTACHMENT C

Sequence of Major Activities

Site preparation for this project will generally include the following, in the order that they appear below:

- Clearing will provide for the removal of vegetation and trees from the roadway and drainage improvements. It is anticipated that this may disturb approximately 1.86 acres.
- Excavation for the drainage improvements. It is anticipated that this may disturb approximately 0.32 acres.

Construction would generally include the following, in the order that they appear below:

- Placement of temporary erosion control devices. It is anticipated that this may disturb a negligible amount of the site area.
- Excavation of roadway embankment, preparation of subgrade for roadway construction, placement of roadway base material, and placement of curbing, asphalt, and concrete material. It is anticipated that this may disturb approximately 2.65 acres.
- Site cleanup, top dressing, and revegetation (if applicable). It is anticipated that this may disturb the whole project area, approximately 40.18 acres.

ATTACHMENT D

Temporary Best Management Practices (TBMPs)

Soil retention blankets, erosion control logs, and construction entrance/ exit(s) will be used during and/or after construction and will be installed prior to site preparation, as applicable. Prior to the initiation of construction activities, all previously installed control measures will be repaired or reestablished for their designed or intended purpose.

Engineered erosion control logs will be used to prevent pollution of surface water, groundwater, or stormwater that originates upgradient from the site and flows across the site. This will occur throughout the proposed construction area, where applicable.

Site preparation, which is the initiation of all activity on the project, will disturb the largest amount of soil. Therefore, before any work can begin, the contractor shall be responsible for the installation of all on-site control measures. The methodology for pollution prevention of on-site stormwater will include:

- Erection of erosion control logs along the downgradient boundary of construction activities for temporary erosion and sediment controls.
- Installation of stabilized construction entrance/ exit(s) to reduce the dispersion of sediment from the site.
- Installation of erosion control logs as inlet protection when there is planned construction within the drainage area that will runoff to the inlet.

Prior to the initiation of construction activities, all previously installed control measures will be repaired or reestablished for their designed or intended purpose. This work, which is the remainder of all activity on the project, may also disturb additional soil.

Temporary measures are intended to provide a method of slowing the flow of runoff from the construction site to allow sediment and suspended solids to settle out of the runoff. By containing the sediment and solids within the site, they will not enter surface streams and/or sensitive features.

No naturally occurring sensitive features were identified in the Geologic Assessment within the project limits.

BMP measures utilized in this plan are intended to allow stormwater to continue downstream after passing through the BMPs. This will allow stormwater runoff to continue downgradient to streams and/or features that may exist downstream of this site.

ATTACHMENT F

Structural Practices

Structural practices to be used include erosion control logs. Refer to Attachment D for additional details.

ATTACHMENT G

Drainage Area Map

Please see Appendix A for the project's drainage area map.

ATTACHMENT I

Inspection and Maintenance for BMP's

Inspections and maintenance will be in accordance with TCEQ construction General Permit No. TXR150000.

Road: _____

INSPECTION AND MAINTENANCE REPORT

Amount of last rainfall: _____
Date: _____

Site or Drainage Area*	Approximate Stations From	To	LT or RT of Centerline	**Date since last Disturbance	**Date of next Disturbance	Control Measures	Current Condition	Corrective Action or Remarks	Work Sequence Priority

* See Site Map for drainage areas. Site may include borrow sources, haul roads, contractor's yard, stockpiles, etc.

** Areas which will be exposed more than 21 days must be stabilized within 14 days.

Control Measures

1. Temporary Seeding	11. Diversion Swale	21. Stone Outlet Structure
2. Permanent Plant/Sod/Seed	12. Diversion Dike/Swale	22. Curbs and Gutters
3. Mulch	13. Pipe Slope Drain	23. Storm Sewers
4. Soil Retention Blanket	14. Paved Flume	24. Velocity Control Devices
5. Buffer Zone	15. Rock Bed at Constr. Exit	25. Excess Dirt Removed from Rdwy Daily
6. Preserve Natural Resource	16. Timber Mat at Constr. Exit	26. Haul Roads dampened for dust Control
7. Silt Fence	17. Channel Liner	27. Cleanup of Possible Contaminants
8. Hay Bales	18. Sediment Trap	28. _____
9. Rock Berm	19. Sediment Basin	29. _____
10. Diversion Dike	20. Storm Inlet Sediment Trap	30. _____

Condition Codes

U- Upgrade needed
R- Replacement needed
M- Maintenance needed
C- Cleaning needed
I- Increase measures
S- Stable (no action)
O1- Other: _____
O2- Other: _____
O3- Other: _____
O4- Other: _____

_____ Construction Superintendent

_____ Inspector

ATTACHMENT J

Schedule of Interim and Permanent Soil Stabilization Practices

Interim stabilization would be performed pursuant to TCEQ Construction General Permit TXR150000. All areas not planned for impervious cover (i.e. asphalt, concrete) will be permanently stabilized with seeding and/or sodding prior to completion of this project.

AGENT AUTHORIZATION

Agent Authorization Form
For Required Signature
Edwards Aquifer Protection Program
Relating to 30 TAC Chapter 213
Effective June 1, 1999

I Shane Rotter,
Print Name

TCEQ Liaison,
Title - Owner/President/Other

of Texas Department of Transportation,
Corporation/Partnership/Entity Name

have authorized Michael Curl
Print Name of Agent/Engineer

of The Estes Group, LLC
Print Name of Firm

to represent and act on the behalf of the above named Corporation, Partnership, or Entity for the purpose of preparing and submitting this plan application to the Texas Commission on Environmental Quality (TCEQ) for the review and approval consideration of regulated activities.

I also understand that:

1. The applicant is responsible for compliance with 30 Texas Administrative Code Chapter 213 and any condition of the TCEQ's approval letter. The TCEQ is authorized to assess administrative penalties of up to $10,000 per day per violation.

2. For those submitting an application who are not the property owner, but who have the right to control and possess the property, additional authorization is required from the owner.

3. Application fees are due and payable at the time the application is submitted. The application fee must be sent to the TCEQ cashier or to the appropriate regional office. The application will not be considered until the correct fee is received by the commission.

4. A notarized copy of the Agent Authorization Form must be provided for the person preparing the application, and this form must accompany the completed application.

5. No person shall commence any regulated activity on the Edwards Aquifer Recharge Zone, Contributing Zone or Transition Zone until the appropriate application for the activity has been filed with and approved by the Executive Director.

SIGNATURE PAGE:

Applicant's Signature

9/17/24
Date

THE STATE OF _____ §

County of _____ §

BEFORE ME, the undersigned authority, on this day personally appeared _____known to me to be the person whose name is subscribed to the foregoing instrument, and acknowledged to me that (s)he executed same for the purpose and consideration therein expressed.

GIVEN under my hand and seal of office on this ____ day of _____,_____.

_____
NOTARY PUBLIC

_____
Typed or Printed Name of Notary

MY COMMISSION EXPIRES: _____

CORE DATA

TCEQ Use Only

TCEQ Core Data Form

For detailed instructions on completing this form, please read the Core Data Form Instructions or call 512-239-5175.

SECTION I: General Information

1. Reason for Submission (*If other is checked please describe in space provided.*)

☒ New Permit, Registration or Authorization (*Core Data Form should be submitted with the program application.*)

☐ Renewal *(Core Data Form should be submitted with the renewal form)*

☐ Other

2. Customer Reference Number *(if issued)*	Follow this link to search for CN or RN numbers in Central Registry**	**3. Regulated Entity Reference Number** *(if issued)*
CN 600803456		**RN 0**

SECTION II: Customer Information

4. General Customer Information | **5. Effective Date for Customer Information Updates** (mm/dd/yyyy)

☐ New Customer ☐ Update to Customer Information ☐ Change in Regulated Entity Ownership
☐ Change in Legal Name (Verifiable with the Texas Secretary of State or Texas Comptroller of Public Accounts)

The Customer Name submitted here may be updated automatically based on what is current and active with the Texas Secretary of State (SOS) or Texas Comptroller of Public Accounts (CPA).

6. Customer Legal Name *(If an individual, print last name first: eg: Doe, John)* | *If new Customer, enter previous Customer below:*

7. TX SOS/CPA Filing Number	**8. TX State Tax ID** (11 digits)	**9. Federal Tax ID** (9 digits)	**10. DUNS Number** *(if applicable)*

11. Type of Customer:

☐ Corporation ☐ Individual Partnership: ☐ General ☐ Limited
Government: ☐ City ☐ County ☐ Federal ☐ Local ☐ State ☐ Other ☐ Sole Proprietorship ☐ Other:

12. Number of Employees

☐ 0-20 ☐ 21-100 ☐ 101-250 ☐ 251-500 ☐ 501 and higher

13. Independently Owned and Operated?

☐ **Yes** ☐ **No**

14. Customer Role (Proposed or Actual) – *as it relates to the Regulated Entity listed on this form. Please check one of the following*

☐ Owner ☐ Operator ☐ Owner & Operator
☐ Occupational Licensee ☐ Responsible Party ☐ VCP/BSA Applicant ☐ Other:

15. Mailing Address:							
	City		**State**		**ZIP**	**ZIP + 4**	

16. Country Mailing Information *(if outside USA)*	**17. E-Mail Address** *(if applicable)*

18. Telephone Number	19. Extension or Code	20. Fax Number *(if applicable)*
( ) -		( ) -

SECTION III: Regulated Entity Information

21. General Regulated Entity Information *(If 'New Regulated Entity" is selected, a new permit application is also required.)*

☒ New Regulated Entity ☐ Update to Regulated Entity Name ☐ Update to Regulated Entity Information

The Regulated Entity Name submitted may be updated, in order to meet TCEQ Core Data Standards (removal of organizational endings such as Inc, LP, or LLC).

22. Regulated Entity Name *(Enter name of the site where the regulated action is taking place.)*

SH 29 from Wolf Ranch Parkway to IH-35 SBFR

23. Street Address of the Regulated Entity: ***(No PO Boxes)***							
	City		**State**		**ZIP**		**ZIP + 4**
24. County	Williamson						

If no Street Address is provided, fields 25-28 are required.

25. Description to Physical Location:	SH 29 from Wolf Ranch Parkway to IH-35 SBFR				
26. Nearest City			**State**	**Nearest ZIP Code**	
Georgetown			TX	78626	

Latitude/Longitude are required and may be added/updated to meet TCEQ Core Data Standards. (Geocoding of the Physical Address may be used to supply coordinates where none have been provided or to gain accuracy).

27. Latitude (N) In Decimal:	30.633056		**28. Longitude (W) In Decimal:**	97.697222	
Degrees	Minutes	Seconds	Degrees	Minutes	Seconds
30	37	59	97	41	50

29. Primary SIC Code (4 digits)	30. Secondary SIC Code (4 digits)	31. Primary NAICS Code (5 or 6 digits)	32. Secondary NAICS Code (5 or 6 digits)

33. What is the Primary Business of this entity? *(Do not repeat the SIC or NAICS description.)*

Roadway construction

34. Mailing Address:	**Masoud Moradian**						
	2727 S Austin Ave						
	City	**Georgetown**	**State**	**TX**	**ZIP**	**78626**	**ZIP + 4**
35. E-Mail Address:	**masoud.moradian@txdot.gov**						

36. Telephone Number	37. Extension or Code	38. Fax Number *(if applicable)*
(512) 930-5402		( ) -

39. TCEQ Programs and ID Numbers Check all Programs and write in the permits/registration numbers that will be affected by the updates submitted on this form. See the Core Data Form instructions for additional guidance.

☐ Dam Safety	☐ Districts	☐ Edwards Aquifer	☐ Emissions Inventory Air	☐ Industrial Hazardous Waste
☐ Municipal Solid Waste	☐ New Source Review Air	☐ OSSF	☐ Petroleum Storage Tank	☐ PWS
☐ Sludge	☐ Storm Water	☐ Title V Air	☐ Tires	☐ Used Oil
☐ Voluntary Cleanup	☐ Wastewater	☐ Wastewater Agriculture	☐ Water Rights	☐ Other:

SECTION IV: Preparer Information

40. Name:	Michael Curl	**41. Title:**	Project Engineer

42. Telephone Number	**43. Ext./Code**	**44. Fax Number**	**45. E-Mail Address**
(361 **)** 676-0306		**( )** -	michael.curl@teg-tx.com

SECTION V: Authorized Signature

46. By my signature below, I certify, to the best of my knowledge, that the information provided in this form is true and complete, and that I have signature authority to submit this form on behalf of the entity specified in Section II, Field 6 and/or as required for the updates to the ID numbers identified in field 39.

Company:	The Estes Group, LLC	**Job Title:**	Project Engineer
Name *(In Print):*	Michael Curl	**Phone:**	**(** 361 **)** 676- **0306**
Signature:		**Date:**	3/5/2026

APPENDIX A

CONT	SECT	JOB	HIGHWAY
0337	01	053	SH 29
DIST	COUNTY		SHEET NO.
AUS	WILLIAMSON		1

STATE OF TEXAS
DEPARTMENT OF TRANSPORTATION

PLANS OF PROPOSED
STATE HIGHWAY IMPROVEMENT

STATE PROJECT NUMBER
CC 337-1-53
CSJ 0337-01-053

SH 29
WILLIAMSON COUNTY

NET LENGTH OF PROJECT = 3,241.38 FT. = 0.614 MI.

FROM: 0.161 MI W OF WOLF RANCH PARKWAY
TO: 0.075 MI W OF IH-35 FR

FOR THE CONSTRUCTION OF INTERSECTION IMPROVEMENTS WITH RIGHT AND/OR LEFT TURN LANES

ADD AND EXTEND LEFT TURN LANES AND RIGHT TURN LANES

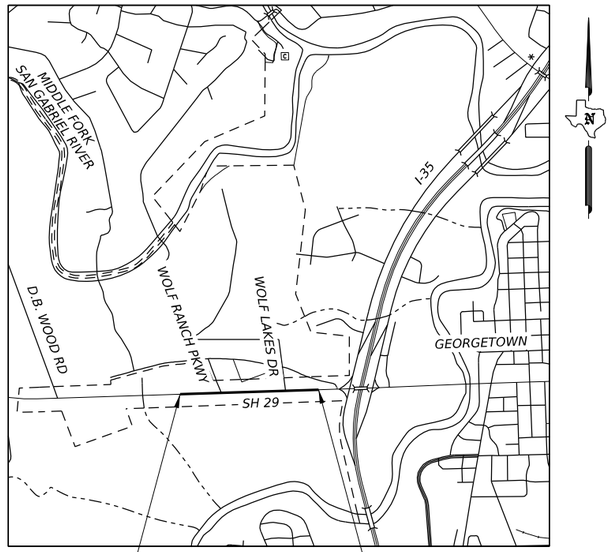

BEGIN PROJECT
℄ SH 29 STA. 149+31.22
0.161 MI W OF WOLF RANCH PARKWAY
30°37'58.24"N
97°42'13.27"W

NOT TO SCALE
EXCEPTIONS: NONE
EQUATIONS: NONE
RAILROAD CROSSINGS: NONE

END PAVEMENT WIDENING
℄ SH 29 STA. 181+53.29
0.075 MI W OF IH-35 FR
30°37'58.87"N
97°41'36.23"

DESIGN SPEED:
SH 29: 45 MPH

A.D.T.:
2022: 31,195 VPD
2042: 43,673 VPD

FINAL PLANS

LETTING DATE: _____

DATE CONTRACTOR BEGAN WORK: _____

DATE WORK WAS COMPLETED & ACCEPTED: _____

FINAL CONTRACT COST: $_____

CONTRACTOR: _____

PLANS PREPARED BY:

Kimley»Horn
TEXAS REGISTRATION F-928
SUITE 1310
501 S AUSTIN AVENUE
GEORGETOWN, TEXAS 78626

1/21/2026

STATE OF TEXAS
AUSTIN S. HELTON
124922
LICENSED
PROFESSIONAL ENGINEER

I CERTIFY THAT THIS PROJECT WAS CONSTRUCTED IN SUBSTANTIAL COMPLIANCE WITH THE FINAL AS-BUILT PLANS AND SPECIFICATIONS.

_____ P.E. _____
AREA ENGINEER DATE

CORRECT:

CONSULTING ENG. (TBPE FIRM REG. F-928)

SUBMITTED FOR LETTING:

CITY OF GEORGETOWN

RECOMMENDED FOR LETTING:

DISTRICT DESIGN ENGINEER

SUBMITTED FOR LETTING:

AREA ENGINEER

APPROVED FOR LETTING:

DIRECTOR OF TRANSPORTATION PLANNING & DEVELOPMENT

Registered Accessibility Specialist (RAS) Inspection Required

TDLR No. TABS2026009689

SPECIFICATIONS ADOPTED BY THE TEXAS DEPARTMENT OF TRANSPORTATION ON SEPTEMBER 1, 2024 AND SPECIFICATION ITEMS LISTED AND DATED AS FOLLOWS, SHALL GOVERN ON THIS PROJECT: SPECIAL LABOR PROVISIONS FOR STATE PROJECTS (000---005).

Texas Department of Transportation

©2026 by Texas Department of Transportation; all rights reserved.

DATE: 1/21/2026 2:43:59 PM
FILE: pw://kh-pw.bentley.com:kh-pw-01/Documents/01 Active Projects/TX-GEO-069284005 - SH 29 Widening/4 - Design/Plan Set/1. General/SH29_K_GEN_TITLE.dgn

DW:		DW:		CK:

GENERAL

1			TITLE SHEET
2			INDEX OF SHEETS
3	-	5	PROJECT LAYOUT
6	-	7	EXISTING TYPICAL SECTIONS
8	-	9	PROPOSED TYPICAL SECTIONS
10			GENERAL NOTES
11			ESTIMATE & QUANTITY SHEET
12	-	14	SUMMARY TABLES
15			BLUEBONNET PLAZA SUMMARY TABLES
16			DRAINAGE SUMMARY TABLES
17			EARTHWORK SUMMARY TABLE

TRAFFIC CONTROL PLAN

18			TRAFFIC CONTROL PLAN - NARRATIVE
19	-	20	CONFLICT LAYOUT
21	-	23	TRAFFIC CONTROL PLAN - TYPICAL SECTIONS
24	-	28	TRAFFIC CONTROL PLAN - PHASE 1
29	-	31	TRAFFIC CONTROL PLAN - PHASE 2
32	-	36	TRAFFIC CONTROL PLAN - PHASE 3
37	-	38	TRAFFIC CONTROL PLAN - PHASE 4
39			TRAFFIC CONTROL PLAN - PHASE 5
40	-	43	TRAFFIC CONTROL PLAN - PHASE 6
44	-	47	TRAFFIC CONTROL PLAN - PHASE 7

TRAFFIC CONTROL STANDARDS

48	-	59	*	BC(1)-21 THRU BC (12)-21
60	-	61	*	LPCB-13
62			*	TCP(1-5)-18
63			*	TCP(2-4)-18
64			*	TCP(2-5)-18
65			*	TCP(3-2)-13
66			*	TCP(3-3)-14
67			*	TCP(3-4)-13
68	-	69	*	WZ(BTS-1)-13 THRU WZ(BTS-2)-13
70			*	WZ(STPM)-23
71			*	WZ(UL)-13
72			*	WZ(TD)-17
73			*	WZ(RCD)-13
74			*	WZ(BRK)-13
75			*	WZ(RS)-22

ROADWAY DETAILS

76	-	77	SURVEY CONTROL SHEETS
78			HORIZONTAL ALIGNMENT DATA
79	-	82	REMOVAL LAYOUT
83	-	89	ROADWAY PLAN AND PROFILE
90			WOLF RANCH PRKY INTERSECTION LAYOUT
91			WOLF LAKES DR INTERSECTION LAYOUT
92			INTERSECTION LAYOUT POINT TABLES
93	-	94	DRIVEWAY PLAN AND PROFILE
95	-	98	SIDEWALK CONNECTION DETAILS
99			MISCELLANEOUS DETAILS
100			ASSET MANAGEMENT PLAN SHEET

ROADWAY STANDARDS

101			*	CITY OF GEORGETOWN CONSTRUCTION STANDARDS AND DETAILS
102			*	MCPSWMD-25(AUS)
103			*	DWMB-24 (AUS)
104			*	CCCG-22
105	-	106	*	CRCP(1)-24
107			*	JS-25
108	-	110	*	PED-18
111	-	113	*	PRD-13
114			*	TRANS-20
115			*	FLEXPAVE(2)-22 (AUS)

DRAINAGE DETAILS

116	-	118	DRAINAGE AREAS
119			HYDROLOGIC DATA
120	-	121	HYDRAULIC DATA - INLETS
122	-	123	HYDRAULIC DATA - STORM SEWER
124	-	133	DRAINAGE PLAN AND PROFILE
134	-	136	DRAINAGE PROFILES
137			DRAINAGE DETAILS

DRAINAGE STANDARDS

138	-	139	***	PCO
140			***	CGT-PCO
141	-	142	***	PCU
143			***	CGT-PCU
144			***	PB
145			***	PBGC
146			***	PDD
147			***	PJB
148	-	149	***	PSL

TRAFFIC ITEMS

150			WOLF RANCH PRKY EXISTING TRAFFIC SIGNAL LAYOUT
151			WOLF RANCH PRKY PROPOSED TRAFFIC SIGNAL LAYOUT
152			WOLF RANCH PRKY TRAFFIC SIGNAL ELEVATION VIEWS
153			WOLF RANCH PKWY TRAFFIC SIGNAL ELECTRIC DATA
154			WOLF RANCH PKWY TRAFFIC SIGNAL PHASING, DETECTION & LOAD SWITCH LAYOUT
155			WOLF LAKES DR EXISTING TRAFFIC SIGNAL LAYOUT
156			WOLF LAKES DR PROPOSED TRAFFIC SIGNAL LAYOUT
157			WOLF LAKES DR TRAFFIC SIGNAL ELEVATION VIEWS
158	-	159	WOLF LAKES DR TRAFFIC SIGNAL ELECTRICAL DATA
160			WOLF LAKES DR TRAFFIC SIGNAL PHASING, DETECTION & LOAD SWITCH LAYOUT
161	-	162	I-35 EXISTING TRAFFIC SIGNAL LAYOUT
163	-	164	I-35 PROPOSED TRAFFIC SIGNAL LAYOUT
165	-	166	I-35 TRAFFIC SIGNAL ELEVATION VIEWS
167			I-35 TRAFFIC SIGNAL ELECTRICAL DATA
168	-	169	I-35 TRAFFIC SIGNAL PHASING, DETECTION & LOAD SWITCH LAYOUT
170			MISCELLANEOUS SIGNAL DETAILS
171			SPREAD FOOTING PEDESTRIAN POLE DETAIL
172	-	176	SUMMARY OF SMALL SIGNS

TRAFFIC ITEMS CONTINUED

177	-	178	BLUEBONNET PLAZA TRAFFIC SIGNAL GENERAL NOTES
179			BLUEBONNET PLAZA EXISTING TRAFFIC SIGNAL CONDITIONS & REMOVAL LAYOUT
180			BLUEBONNET PLAZA PROPOSED TRAFFIC SIGNAL LAYOUT
181	-	186	BLUEBONNET PLAZA PROPOSED TRAFFIC SIGNAL TABLES
187			BLUEBONNET PLAZA PROPOSED NORTHWEST CORNER LAYOUT
188			BLUEBONNET PLAZA PROPOSED NORTHEAST CORNER LAYOUT
189			BLUEBONNET PLAZA PROPOSED SOUTHEAST CORNER LAYOUT
190			BLUEBONNET PLAZA PROPOSED SOUTHWEST CORNER LAYOUT
191			BLUEBONNET PLAZA PROPOSED PAVEMENT MARKING LAYOUT
192			BLUEBONNET PLAZA PROPOSED CURB RAMP AND SIDEWALK LAYOUT
193	-	197	SIGNING AND PAVEMENT MARKINGS

TRAFFIC STANDARDS

198	-	199	**	SMA-80(1)-12
200			**	SMA-80(2)-12
201			**	LMA(1)-12
202			**	LMA(2)-12
203			**	LMA(3)-12
204			**	LMA(4)-12
205			**	LMA(5)-12
206			**	MA-D-12
207			**	MA-DPD-20
208			**	MA-C-12
209			**	MA-C(ILSN)-12
210			**	LUM-A-12
211			**	CFA-12
212			**	TS-BP-20
213			**	ILSN-25
214			**	TS-FD-12
215			**	WV & IZ-14
216			**	TS-CF-21
217			**	ED(1)-25
218			**	ED(3)-25
219			**	ED(4)-25
220			**	ED(5)-25
221			**	ED(6)-25
222			**	ED(8)-25
223			**	ED(9)-25
224			*	CPM(1)-23
225			*	PM(1)-22
226			*	PM(2)-22
227			*	PM(3)-22
228			*	PM(4)-22A
229			*	D & OM(4)-25
230			*	SMD(GEN)-08
231			*	SMD(SLIP-1)
232			*	SMD(SLIP-2)
233			*	SMD(SLIP-3)
234	-	237	*	TLRS(1-4) 17
238			*	TS-CD-22
239			*	TSR(3)-13
240			*	TSR(4)-13

UTILITIES

241	-	248	SUE PLAN SHEETS
249	-	255	COMPLETED UTILITY RELOCATION LAYOUTS

ENVIRONMENTAL ITEMS

256	-	257	EPIC
258	-	259	STORMWATER POLLUTION PREVENTION PLAN
260	-	263	EROSION CONTROL PLAN

ENVIRONMENTAL STANDARDS

264			*	EC(1)-16
265			*	EC(3)-16
266	-	268	*	EC(9)-16
269			*	TPD-19(AUS)

WATER QUALIY ITEMS

270	-	271	WATER QUALITY BASIN MAP
272			WATER QUALITY CALCULATIONS

WATER QUALIY DETAILS

273			TCEQ REQUIREMENTS FOR RECHARGE ZONE OF EDWARDS AQUIFER (AUS)
274			TCEQ WPAP GENERAL CONSTRUCTION NOTES
275			STORMTROOPER A

* THE STANDARD SHEETS SPECIFICALLY IDENTIFIED ABOVE HAVE BEEN SELECTED BY ME OR UNDER MY SUPERVISION AND ARE APPLICABLE TO THIS PROJECT.

STATE OF TEXAS · TYLER G. MITCHELL · 139240 · LICENSED PROFESSIONAL ENGINEER

TYLER G. MITCHELL — P.E. — 12/18/2025

TYLER G. MITCHELL — DATE

** THE STANDARD SHEETS SPECIFICALLY IDENTIFIED ABOVE HAVE BEEN SELECTED BY ME OR UNDER MY SUPERVISION AND ARE APPLICABLE TO THIS PROJECT.

STATE OF TEXAS · MATTHEW A. GAAL · 140753 · LICENSED PROFESSIONAL ENGINEER

MATTHEW A. GAAL — P.E. — 12/18/2025

MATTHEW A. GAAL — DATE

***THE STANDARD SHEETS SPECIFICALLY IDENTIFIED ABOVE HAVE BEEN SELECTED BY ME OR UNDER MY SUPERVISION AND ARE APPLICABLE TO THIS PROJECT.

STATE OF TEXAS · MICHAEL CURL · 126986 · LICENSED PROFESSIONAL ENGINEER

MICHAEL R. CURL — P.E. — 12/18/2025

MICHAEL R. CURL — DATE

GEORGETOWN TEXAS
more than welcome

Kimley»Horn F-928

Texas Department of Transportation

SH 29

INDEX OF SHEETS

SHEET 1 OF 1

CONT	SECT	JOB	HIGHWAY
0337	01	053	SH 29
DIST	COUNTY		SHEET NO.
AUS	WILLIAMSON		2

DATE: 12/18/2025 7:36:57 PM
FILE: pw://kh-pw.bentley.com:kh-pw-01/Documents/01 Active Projects/TX-GEO-069284005 - SH 29 Widening/4 - Design/Plan Set/1. General/SH29_K_GEN_INDEX01.dgn

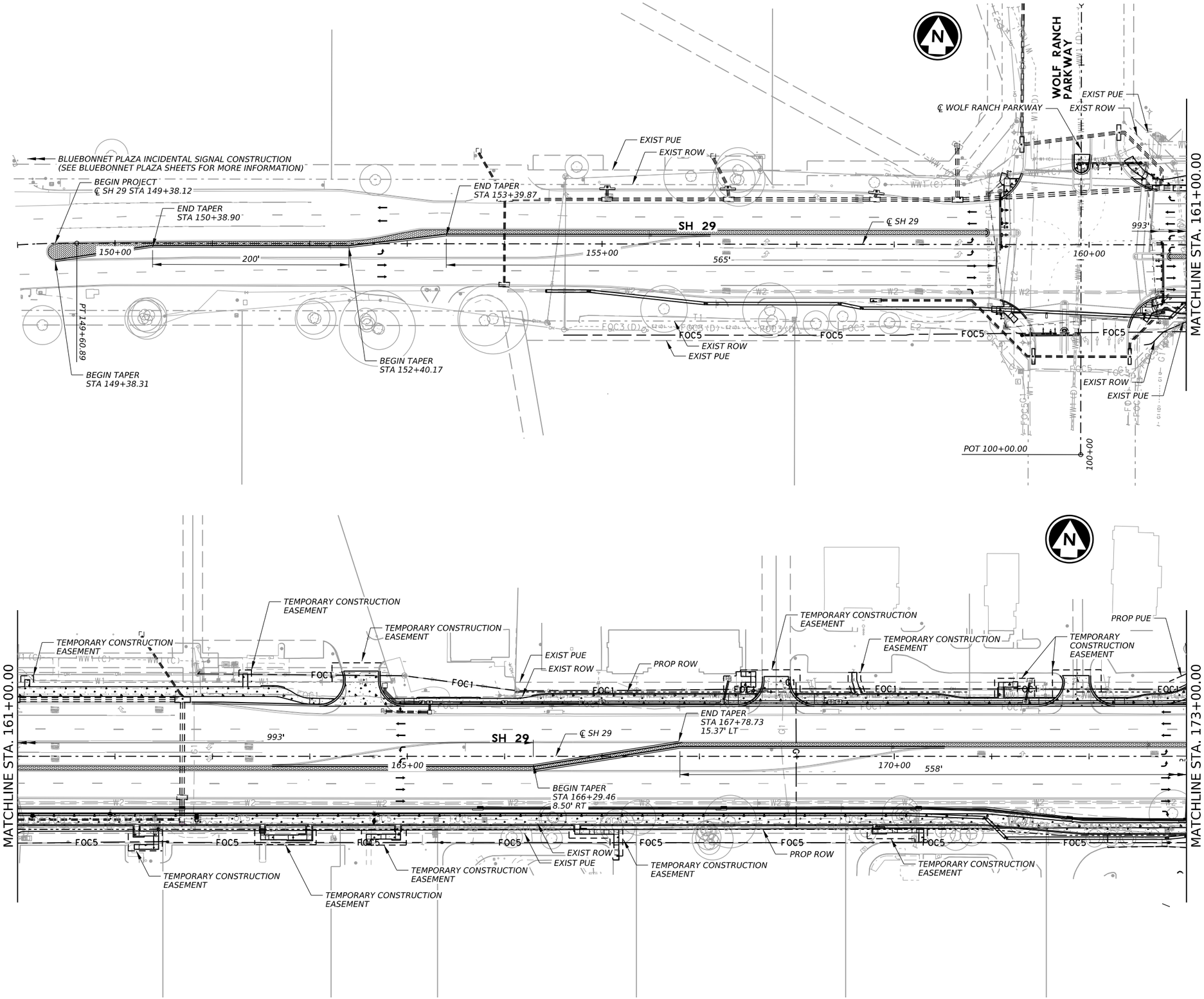

LEGEND

- EXIST ROW
- PROP ROW
- EXIST PUE
- PROP PUE
- TEMP CONSTRUCTION EASEMENT
- PROP IMPROVEMENTS

NOTES:

1. REFER TO SURVEY CONTROL SHEETS FOR VERTICAL AND HORIZONTAL CONTROL INFORMATION.
2. REFER TO THE HORIZONTAL ALIGNMENT DATA SHEETS FOR MORE INFORMATION.
3. TURN LANE LENGTH ARE MEASURED TO THE PROPOSED STOP BAR.
4. REFER TO DRAINAGE PLAN AND PROFILES FOR MORE INFORMATION.
5. REFER TO COMPLETED UTILITY RELOCATION LAYOUTS FOR MORE INFORMATION.

HORIZ. 0' 50' 100'

1/21/2026

TYLER G. MITCHELL
139240
LICENSED
PROFESSIONAL ENGINEER
STATE OF TEXAS

GEORGETOWN
TEXAS
more than welcome

Kimley»Horn
F-928

Texas Department of Transportation

SH 29

PROJECT LAYOUT

BEGIN TO STA. 173+00

SHEET 1 OF 3

CONT	SECT	JOB	HIGHWAY
0337	01	053	SH 29
DIST	COUNTY		SHEET NO.
AUS	WILLIAMSON		3

DATE: 1/21/2026 8:11:33 AM
FILE: pw://kh-pw.bentley.com:kh-pw-01/Documents/01 Active Projects/TX-GEO-069284005 - SH 29 Widening/4 - Design/Plan Set/1. General/SH29_K_GEN_PLAY01.dgn

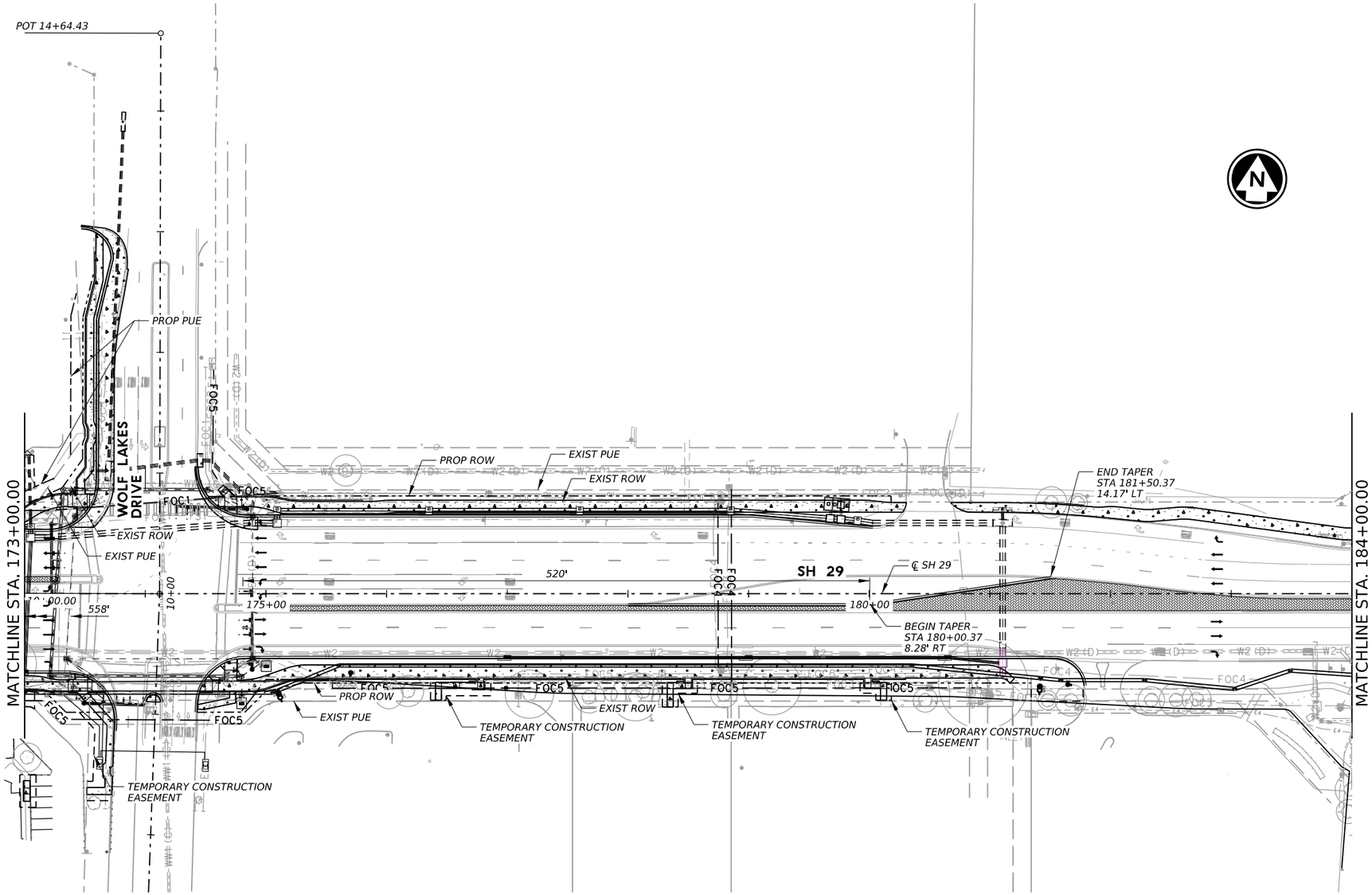

LEGEND

- EXIST ROW
- PROP ROW
- EXIST PUE
- PROP PUE
- TEMP CONSTRUCTION EASEMENT
- PROP IMPROVEMENTS

NOTES:

1. REFER TO SURVEY CONTROL SHEETS FOR VERTICAL AND HORIZONTAL CONTROL INFORMATION.
2. REFER TO THE HORIZONTAL ALIGNMENT DATA SHEETS FOR MORE INFORMATION.
3. TURN LANE LENGTH ARE MEASURED TO THE PROPOSED STOP BAR.
4. REFER TO DRAINAGE PLAN AND PROFILES FOR MORE INFORMATION.
5. REFER TO COMPLETED UTILITY RELOCATION LAYOUTS FOR MORE INFORMATION.

HORIZ. 0' 50' 100'

12/18/2025

STATE OF TEXAS
TYLER G. MITCHELL
139240
LICENSED
PROFESSIONAL ENGINEER

GEORGETOWN TEXAS
more than welcome

Kimley»Horn F-928

Texas Department of Transportation

SH 29

PROJECT LAYOUT
STA. 173+00 TO STA. 184+00

SHEET 2 OF 3

CONT	SECT	JOB	HIGHWAY
0337	01	053	SH 29
DIST		COUNTY	SHEET NO.
AUS		WILLIAMSON	4

DATE: 12/18/2025 1:35:21 PM
FILE: pw://kh-pw.bentley.com:kh-pw-01/Documents/01 Active Projects/TX-GEO-069284005 - SH 29 Widening/4 - Design/Plan Set/1. General/SH29_K_GEN_PLAY03.dgn

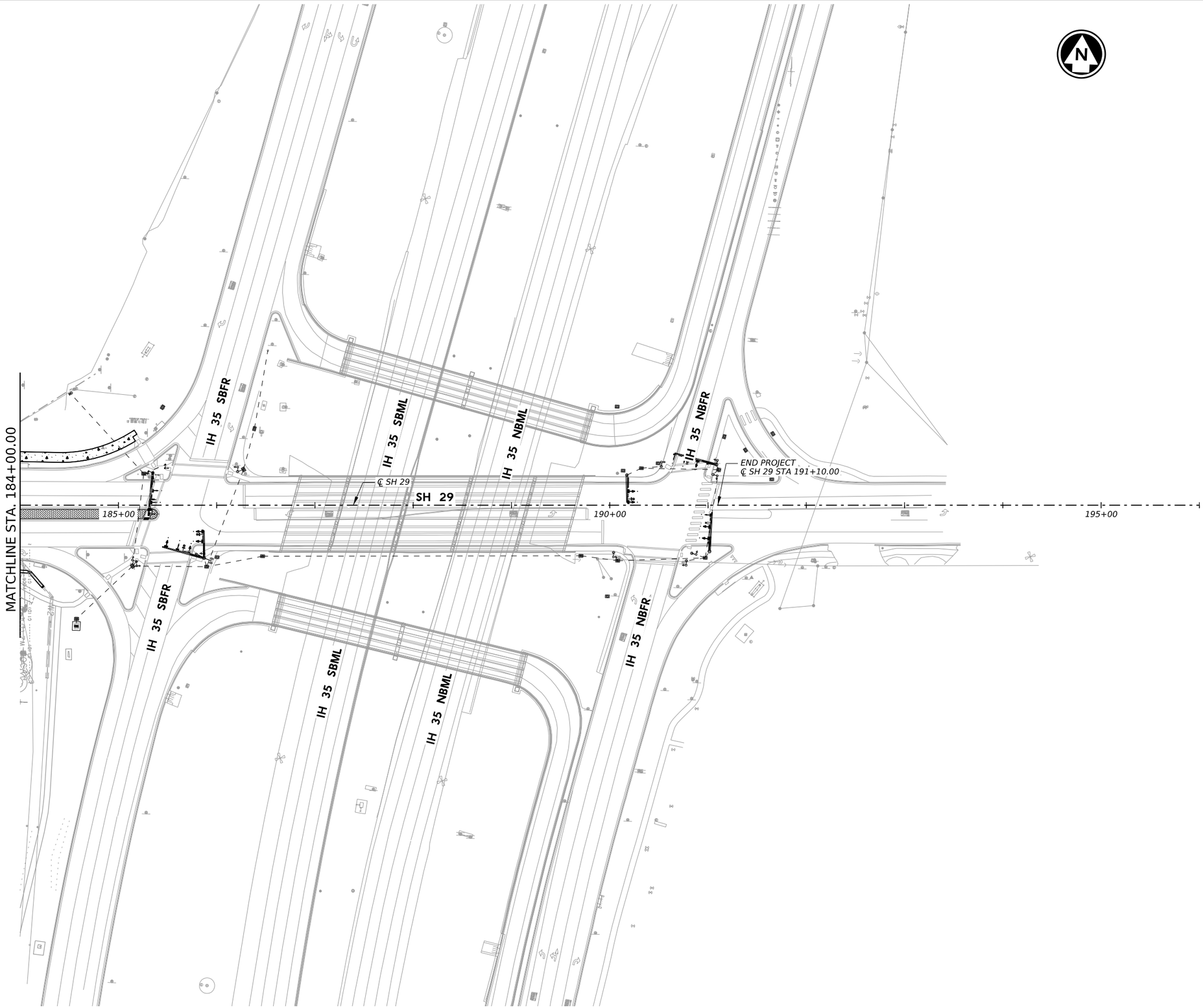

LEGEND

- *EXIST ROW*
- *PROP ROW*
- *EXIST PUE*
- *PROP PUE*
- *TEMP CONSTRUCTION EASEMENT*
- *PROP IMPROVEMENTS*

NOTES:

1. REFER TO SURVEY CONTROL SHEETS FOR VERTICAL AND HORIZONTAL CONTROL INFORMATION.
2. REFER TO THE HORIZONTAL ALIGNMENT DATA SHEETS FOR MORE INFORMATION.
3. TURN LANE LENGTH ARE MEASURED TO THE PROPOSED STOP BAR.
4. REFER TO DRAINAGE PLAN AND PROFILES FOR MORE INFORMATION.
5. REFER TO COMPLETED UTILITY RELOCATION LAYOUTS FOR MORE INFORMATION.

HORIZ. 0' 50' 100'

12/18/2025

STATE OF TEXAS
TYLER G. MITCHELL
139240
LICENSED
PROFESSIONAL ENGINEER

GEORGETOWN TEXAS
more than welcome

Kimley»Horn F-928

Texas Department of Transportation

SH 29

PROJECT LAYOUT
STA. 184+00 TO END

SHEET 3 OF 3

CONT	SECT	JOB	HIGHWAY
0337	01	053	SH 29
DIST	COUNTY		SHEET NO.
AUS	WILLIAMSON		5

DW: CK: DW: CK:

DATE: 12/18/2025 1:35:41 PM
FILE: pw://kh-pw.bentley.com:kh-pw-01/Documents/01 Active Projects/TX-GEO-069284005 - SH 29 Widening/4 - Design/Plan Set/1. General/SH29_K_GEN_PLAY04.dgn

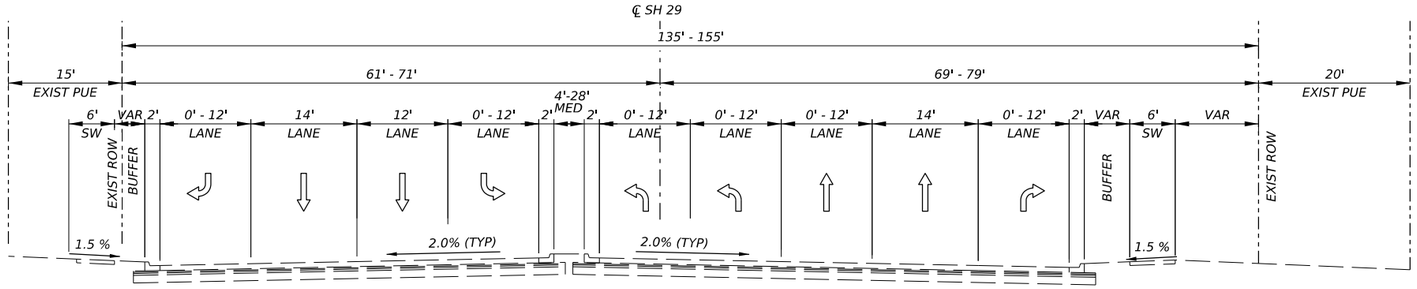

EXISTING TYPICAL SECTION - SH 29
℄ SH 29 BEGIN TO STA. 165+60.00

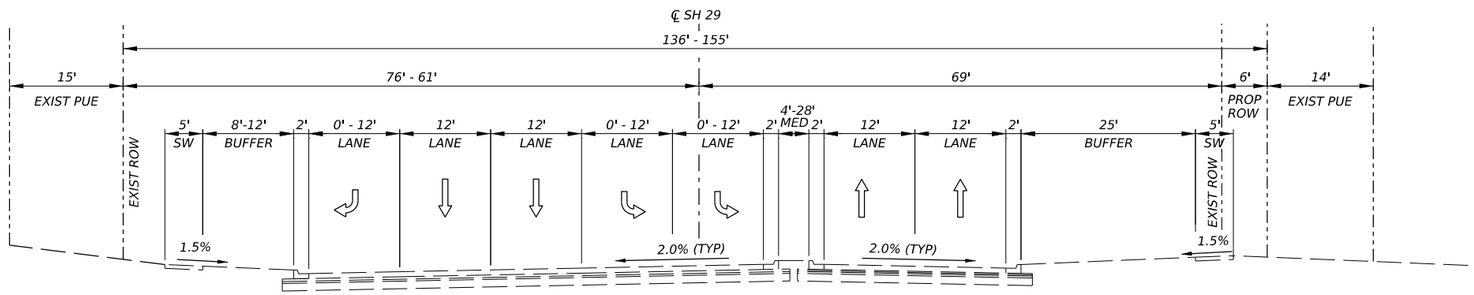

EXISTING TYPICAL SECTION - SH 29
℄ SH 29 STA. 165+60.00 TO END PROJECT

12/18/2025

STATE OF TEXAS
TYLER G. MITCHELL
139240
LICENSED
PROFESSIONAL ENGINEER

GEORGETOWN
TEXAS
more than welcome

Kimley»Horn
F-928

Texas Department of Transportation

SH 29

EXISTING
TYPICAL SECTIONS

SHEET 1 OF 2

CONT	SECT	JOB	HIGHWAY
0337	01	053	SH 29
DIST		COUNTY	SHEET NO.
AUS		WILLIAMSON	6

DATE: 12/18/2025 1:35:59 PM
FILE: pw:\\kimley-horn.com:kh-pw-01/Documents/01 Active Projects/TX-GEO-069284005 - SH 29 Widening/4 - Design/Plan Set/1. General/SH29_K_GEN_TYP01.dgn

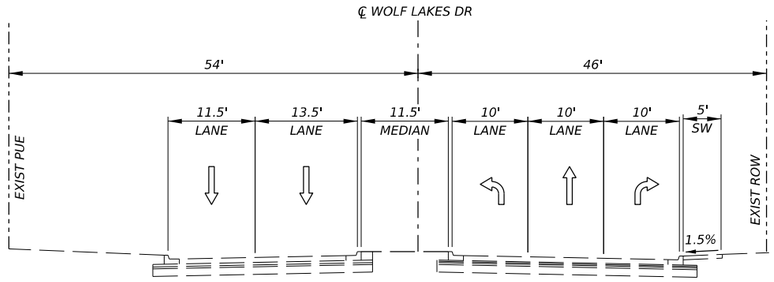

EXISTING TYPICAL SECTION - WOLF LAKES DR
℄ WOLF LAKES DR STA. 8+85.00 TO STA. 9+45.00

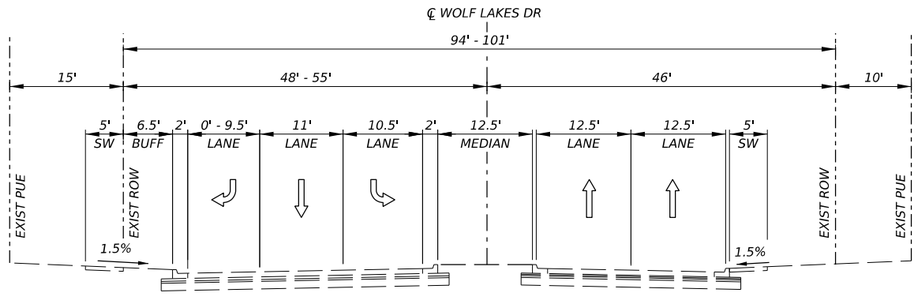

EXISTING TYPICAL SECTION - WOLF LAKES DR
℄ WOLF LAKES DR STA. 10+56.00 TO STA. 13+04.00

12/18/2025

STATE OF TEXAS
TYLER G. MITCHELL
139240
LICENSED
PROFESSIONAL ENGINEER

GEORGETOWN
TEXAS
more than welcome

Kimley»Horn
F-928

Texas Department of Transportation

SH 29

EXISTING
TYPICAL SECTIONS

SHEET 2 OF 2

CONT	SECT	JOB	HIGHWAY
0337	01	053	SH 29
DIST		COUNTY	SHEET NO.
AUS		WILLIAMSON	7

DATE: 12/18/2025 1:36:17 PM
FILE: pw://kh-pw-01/Documents/01 Active Projects/TX-GEO-069284005 - SH 29 Widening/4 - Design/Plan Set/1. General/SH29_K_GEN_TYP02.dgn

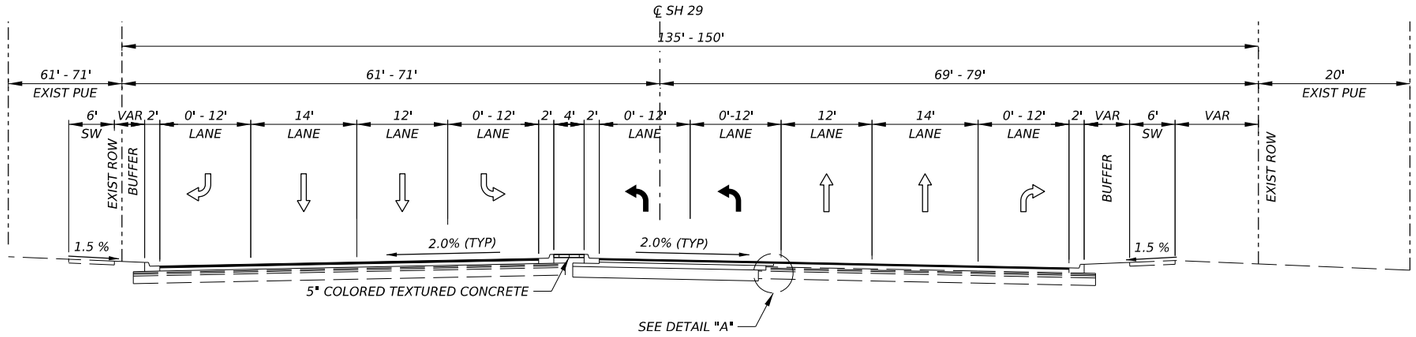

PROPOSED TYPICAL SECTION - SH 29
℄ SH 29 BEGIN TO STA. 159+90.00

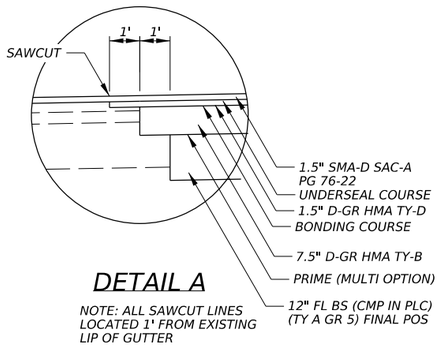

DETAIL A

NOTE: ALL SAWCUT LINES LOCATED 1' FROM EXISTING LIP OF GUTTER

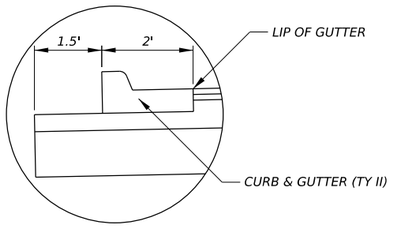

DETAIL B

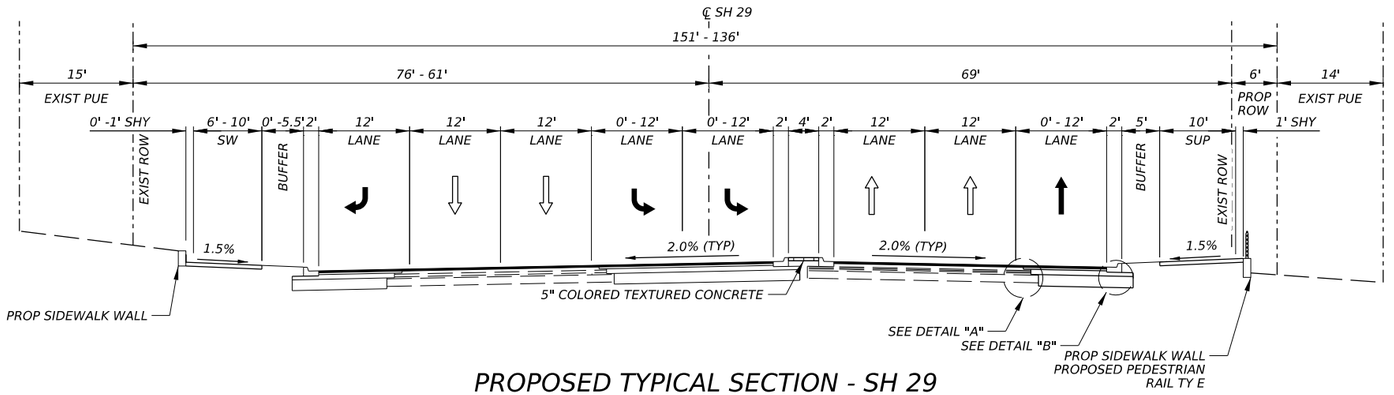

PROPOSED TYPICAL SECTION - SH 29
℄ SH 29 STA. 159+90.00 TO STA. 166+00.00

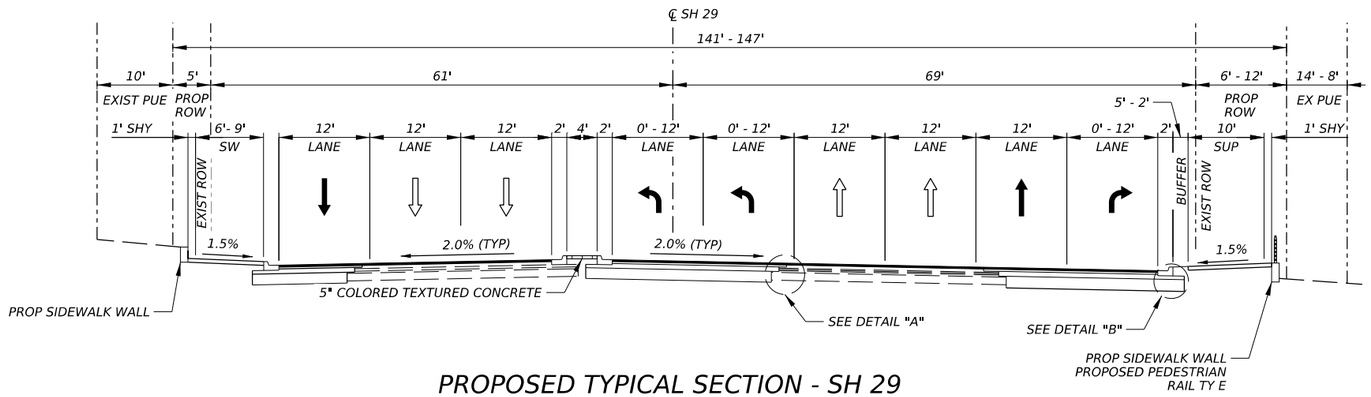

PROPOSED TYPICAL SECTION - SH 29
℄ SH 29 STA. 166+00.00 TO STA. 174+11.81

NOTES:

1. FOR PROPOSED WIDENING AREAS LESS THAN 6 FT, CONTRACTOR TO UTILIZE FLOWABLE FILL IN LIEU OF FLEXIBLE BASE.

12/18/2025

STATE OF TEXAS
TYLER G. MITCHELL
139240
LICENSED
PROFESSIONAL ENGINEER

GEORGETOWN TEXAS
more than welcome

Kimley»Horn F-928

Texas Department of Transportation

SH 29

PROPOSED
TYPICAL SECTIONS

SHEET 1 OF 2

CONT	SECT	JOB	HIGHWAY
0337	01	053	SH 29
DIST	COUNTY		SHEET NO.
AUS	WILLIAMSON		8

DATE: 12/18/2025 8:58:10 PM
FILE: pw://kh-pw.bentley.com:kh-pw-01/Documents/01 Active Projects/TX-GEO-069284005 - SH 29 Widening/4 - Design/Plan Set/1. General/SH29_K_GEN_TYP03.dgn

DW: CK: DW: CK:

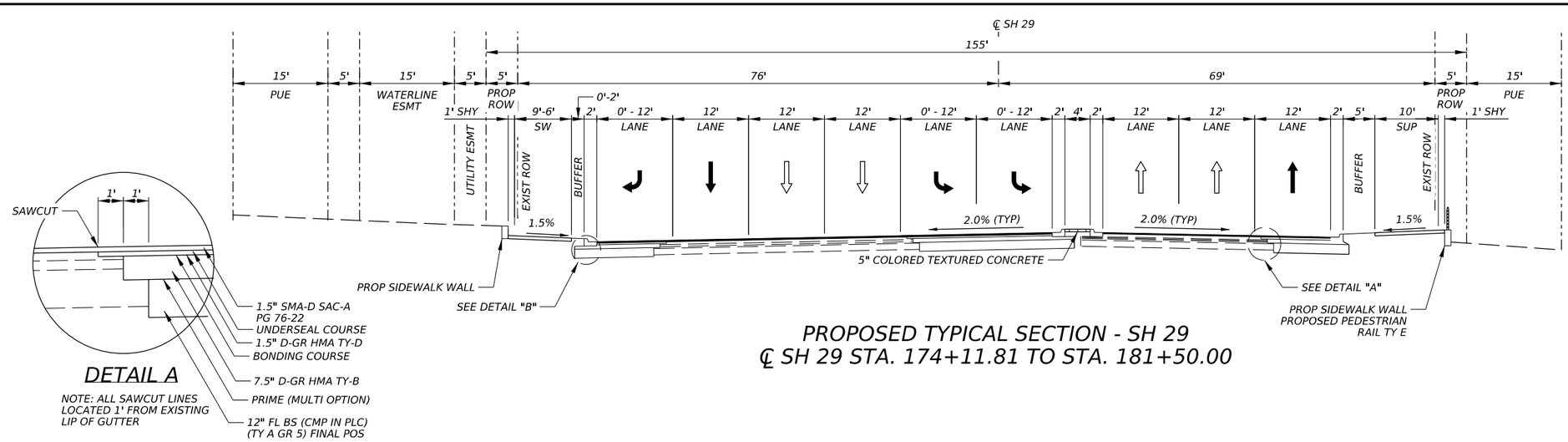

PROPOSED TYPICAL SECTION - SH 29
℄ SH 29 STA. 174+11.81 TO STA. 181+50.00

DETAIL A

NOTE: ALL SAWCUT LINES LOCATED 1' FROM EXISTING LIP OF GUTTER

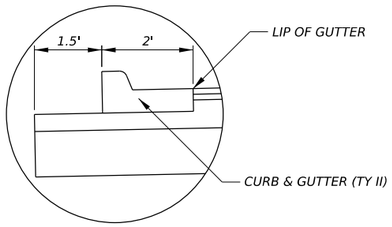

DETAIL B

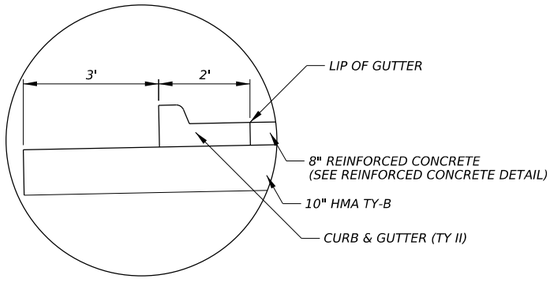

DETAIL C

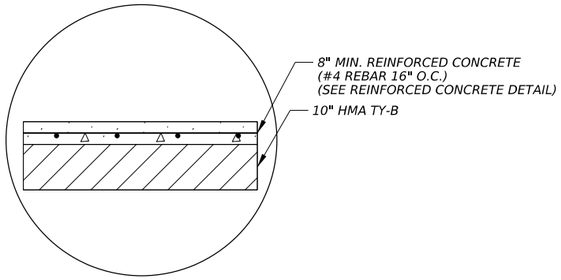

REINFORCED CONCRETE DETAIL

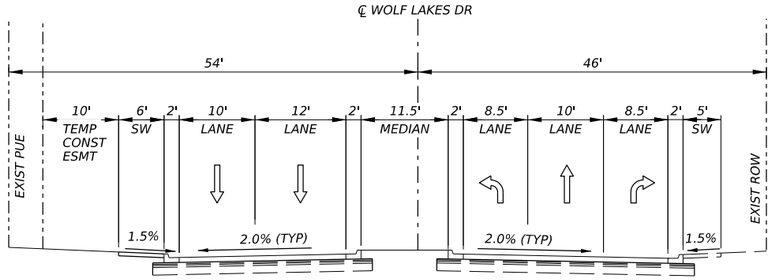

PROPOSED TYPICAL SECTION - WOLF LAKES DR
℄ WOLF LAKES DR STA. 8+85.00 TO STA. 9+18.00

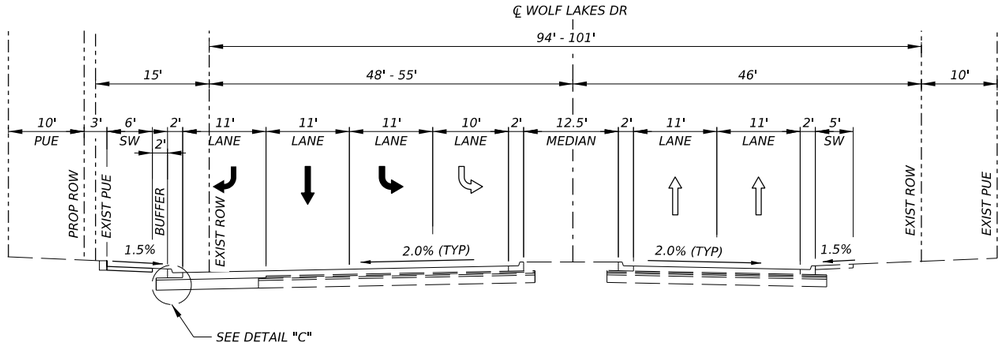

PROPOSED TYPICAL SECTION - WOLF LAKES DR
℄ WOLF LAKES DR STA. 10+51.00 TO STA. 13+04.00

NOTES:

1. FOR PROPOSED WIDENING AREAS LESS THAN 6 FT, CONTRACTOR TO UTILIZE FLOWABLE FILL IN LIEU OF FLEXIBLE BASE.

TYLER G. MITCHELL
139240
LICENSED PROFESSIONAL ENGINEER
STATE OF TEXAS
12/18/2025

GEORGETOWN TEXAS
more than welcome

Kimley»Horn F-928

Texas Department of Transportation

SH 29

PROPOSED TYPICAL SECTIONS

CONT	SECT	JOB	HIGHWAY
0337	01	053	SH 29
DIST	COUNTY		SHEET NO.
AUS	WILLIAMSON		9

DATE: 12/18/2025 1:36:54 PM
FILE: pw://kh-pw.bentley.com:kh-pw-01/Documents/01 Active Projects/TX-GEO-069284005 - SH 29 Widening/4 - Design/Plan Set/1. General/SH29_K_GEN_TYP04.dgn

SUMMARY OF MOBILIZATION ITEMS		
LOCATION	500 7001	502 7001
	MOBILIZATION	BARRICADES, SIGNS AND TRAFFIC HANDLING
	LS	MO
	1.00	10.00
PROJECT TOTALS	1	10

SUMMARY OF WORKZONE TRAFFIC CONTROL ITEMS																				
LOCATION	503 7002	505 7001	505 7003	512 7009	512 7010	512 7033	512 7034	512 7057	512 7058	662 7005	662 7006	662 7008	662 7017	662 7065	662 7068	662 7077	662 7082	662 7092	677 7002	662 7100	662 7112
	PORTABLE CHANGEABLE MESSAGE SIGN	TMA (STATIONARY)	TMA (MOBILE OPERATION)	PORT CTB (FUR & INST)(LOW PROF)(TY 1)	PORT CTB (FUR & INST)(LOW PROF)(TY 2)	PORT CTB (MOVE)(LOW PROF)(TY 1)	PORT CTB (MOVE)(LOW PROF)(TY 2)	PORT CTB (REMOVE)(LOW PROF)(TY 1)	PORT CTB (REMOVE)(LOW PROF)(TY 2)	WK ZN PAV MRK NON-REMOV (W)6"(BRK)	WK ZN PAV MRK NON-REMOV (W)6"(DOT)	WK ZN PAV MRK NON-REMOV (W)6"(SLD)	WK ZN PAV MRK NON-REMOV (W)24"(SLD)	WK ZN PAV MRK REMOV (W)6"(BRK)	WK ZN PAV MRK REMOV (W)6"(SLD)	WK ZN PAV MRK REMOV (W)24"(SLD)	WK ZN PAV MRK REMOV (W)(ARROW)	WK ZN PAV MRK REMOV (W)(WORD)	ELIM EXT PM & MRKS (6")	WK ZN PAV MRK REMOV (Y)6"(SLD)	WK ZN PAV MRK SHT TERM (TAB)TYW
	EA	DAY	DAY	LF	LF	LF	LF	LF	LF	LF	LF	LF	LF	LF	LF	LF	EA	EA	LF	LF	EA
TCP PHASE 1														997					995	3337	300
TCP PHASE 2				1200	200				120	541	42	1326			2376				246		681
TCP PHASE 3				500		1200	80	1700	80	807		3467			1087				281		471
TCP PHASE 4										437					627				211		164
TCP PHASE 5															442						23
TCP PHASE 6													240			193	3	1			
TCP PHASE 7																					
PROJECT TOTALS	4	332	84	1700	200	1200	80	1700	200	1785	42	4793	240	997	4532	193	3	1	1733	3337	1639

SUMMARY OF WORKZONE TRAFFIC CONTROL ITEMS				
LOCATION	662 7113	677 7008	677 7009	677 7015
	WK ZN PAV MRK SHT TERM (TAB)TYY	ELIM EXT PM & MRKS (24")	ELIM EXT PM & MRKS (ARROW)	ELIM EXT PM & MRKS (WORD)
	EA	LF	EA	EA
TCP PHASE 1	167			
TCP PHASE 2				
TCP PHASE 3			3	3
TCP PHASE 4				
TCP PHASE 5				
TCP PHASE 6		429	1	1
TCP PHASE 7				
PROJECT TOTALS	167	429	4	4

SUMMARY OF ROADWAY ITEMS									
LOCATION	100 7002	247 7179	310 7015	341 7003	341 7065	346 7009	351 7005	360 7002	360 7031
	PREPARING ROW	FL BS (CMP IN PLC)(TY A GR 5)(FNAL POS)	PRIME COAT (MULTI OPTION)	D-GR HMA TY-B PG64-22 (EXEMPT)	D-GR HMA TY-D PG 76-22 (EXEMPT)	STONE-MTRX-ASPH SMA-D SAC-A PG76-22	FLEXIBLE PAVEMENT STRUCTURE REPAIR(6")	CONC PVMT (CRCP) (8")	CONC PVMT(TRANSITION SLAB) (8")
	STA	CY	GAL	TON	TON	TON	SY	SY	SY
SH 29 BEGIN TO STA. 153+00	4	171	103	196	39	40			
SH 29 STA. 153+00 TO STA. 159+00	6	216	130	255	51	505			
SH 29 STA. 159+00 TO STA. 165+00	6	349	206	418	87	675			
SH 29 STA. 165+00 TO STA. 171+00	6	1004	603	1128	224	544			
SH 29 STA. 171+00 TO STA. 177+00	6	558	335	988	132	656		428	80
SH 29 STA. 177+00 TO STA. 183+00	6	493	296	572	113	370			
SH 29 STA. 183+00 TO END	3								
PROJECT TOTALS	37	2791	1673	3557	646	2790	1500	428	80

	401 7001	450 7062	479 7001	479 7007
	FLOWABLE BACKFILL	RAIL (HANDRAIL)(TY E)	ADJUSTING MANHOLES	ADJUSTING MANHOLES (WATER VALVE BOX)
	CY	LF	EA	EA
SH 29 BEGIN TO STA. 153+00	5			
SH 29 STA. 153+00 TO STA. 159+00	6			
SH 29 STA. 159+00 TO STA. 165+00	17	528	2	4
SH 29 STA. 165+00 TO STA. 171+00	13	631	2	
SH 29 STA. 171+00 TO STA. 177+00	19	270	5	
SH 29 STA. 177+00 TO STA. 183+00	27	343	1	1
SH 29 STA. 183+00 TO END				
PROJECT TOTALS	87	1772	10	5

SUMMARY OF ROADWAY ITEMS															
LOCATION	527 7002	529 7009	529 7015	529 7016	529 7022	530 7006	531 7002	531 7005	531 7006	531 7007	3006 7001	3007 7001	5031 7002	7019 7001	7019 7002
	COLORED TEXTURED CONC (5")	CONC CURB & GUTTER (TY II)	CONC CURB (TY F2)	CONC CURB (TY C1)	CONC CURB (TY F3)	DRIVEWAYS (CONC)	CONC SIDEWALKS (5")	CURB RAMPS (TY 1)	CURB RAMPS (TY 2)	CURB RAMPS (TY 3)	UNDERSEAL COURSE	BONDING COURSE	RETROFIT DET WARN SURF (SURF APPLIED)	SUBSURFACE UTIL LOCATE (OUTSIDE RDBED)	SUBSURFACE UTIL LOCATE (WITHIN RDBED)
	SY	LF	LF	LF	LF	SY	SY	EA	EA	EA	GAL	EA	EA	EA	EA
SH 29 BEGIN TO STA. 153+00	239	364									94	90			
SH 29 STA. 153+00 TO STA. 159+00	287	319						2		6	1191	115			
SH 29 STA. 159+00 TO STA. 165+00	216	888	348	25	180	171	1043				1591	193			
SH 29 STA. 165+00 TO STA. 171+00	242	1869	238	511	393	119	1388				1284	514			
SH 29 STA. 171+00 TO STA. 177+00	211	1264	45	508	225	122	1289	2	1	6	1547	295			
SH 29 STA. 177+00 TO STA. 183+00	703	1146	343	78			1131				873	263			
SH 29 STA. 183+00 TO END	245						247						2	20	10
PROJECT TOTALS	2143	5850	974	1122	798	412	5098	4	1	12	6580	1470	2	20	10

SUMMARY OF TRAFFIC SIGNAL ITEMS																	
LOCATION	416 7044	416 7046	618 7030	618 7031	618 7036	618 7037	618 7090	620 7008	620 7010	621 7005	624 7008	628 7147	636 7001	680 7003	680 7011	680 7004	682 7001
	DRILL SHAFT (TRF SIG POLE) (36 IN)	DRILL SHAFT (TRF SIG POLE) (48 IN)	CONDT (PVC) (SCH 40) (2")	CONDT (PVC) (SCH 40) (2") (BORE)	CONDT (PVC) (SCH 40) (3")	CONDT (PVC) (SCH 40) (3") (BORE)	CONDUIT (PREPARE)	ELEC CONDR (NO.8) INSULATED	ELEC CONDR (NO.6) INSULATED	TRAY CABLE (4 CONDR) (14 AWG)	GROUND BOX TY D (162922)W/APRON	ELC SRV TY D 120/240 060(NS)SS(E)PS(U)	ALUMINUM SIGNS (TY A)	INSTALL HWY TRF SIG (SYSTEM)	INSTALL HWY TRF SIG (UPGRADE)	REMOVING TRAFFIC SIGNALS	VEH SIG SEC (12")LED(GRN)
	LF	LF	LF	LF	LF	LF	LF	LF	LF	LF	EA	EA	SF	EA	EA	EA	EA
WOLF RANCH		66	140		110		520	1170		615			56		1		6
WOLF LAKES		88	235	160	320	1335		3530	585	650	5	1	56	1		1	10
I-35	13		35		20		1115	365		3320			34		1		4
PROJECT TOTALS	13	154	410	160	450	1335	1635	5065	585	4585	5	1	146	1	2	1	20

GEORGETOWN TEXAS
more than welcome

Kimley»Horn F-928

Texas Department of Transportation

SH 29

SUMMARY TABLES

SHEET 1 OF 3

CONT	SECT	JOB	HIGHWAY
0337	01	053	SH 29
DIST	COUNTY		SHEET NO.
AUS	WILLIAMSON		12

DATE: 2/2/2026 10:07:27 AM
FILE: pw://kh-pw.bentley.com:kh-pw-01/Documents/01 Active Projects/TX-GEO-069284005 - SH 29 Widening/4 - Design/Plan Set/1. General/SH29_K_GEN_SUM01.dgn

CK: DW: CK: DW:

SUMMARY OF TRAFFIC SIGNAL ITEMS																				
LOCATION	682 7002	682 7003	682 7004	682 7005	682 7006	682 7018	682 7042	682 7043	682 7044	682 7045	684 7007	684 7031	684 7033	686 7002	686 7048	686 7056	686 7064	686 7068	686 7313	686 7319	687 7001
	VEH SIG SEC (12")LED(GRN ARW)	VEH SIG SEC (12")LED(YEL)	VEH SIG SEC (12")LED(YEL ARW)	VEH SIG SEC (12")LED(RED)	VEH SIG SEC (12")LED(RED ARW)	PED SIG SEC (LED)(COUNT DOWN)	BACKPLATE W/REF BRDR(3 SEC)(VENT)A LUM	BACKPLATE W/REF BRDR(4 SEC)(VENT)A LUM	BACKPLATE W/REF BRDR(5 SEC)(VENT)A LUM	RETROFIT REFL BRDR SHEETING (3 SEC)	TRF SIG CBL (TY A)(12 AWG)(2 CONDR)	TRF SIG CBL (TY A)(14 AWG)(5 CONDR)	TRF SIG CBL (TY A)(14 AWG)(7 CONDR)	INS TRF SIG PL AM (S)ILSN ARM(9')	INS TRF SIG PL AM(S)1 ARM(44')LUM &ILSN	INS TRF SIG PL AM(S)1 ARM(50')LUM &ILSN	INS TRF SIG PL AM(S)1 ARM(60')LUM &ILSN	INS TRF SIG PL AM(S)1 ARM(65')LUM &ILSN	REMOVE TRF SIG PL	INS TRF SIG PL AM (S)ILSN ARM(11')	PED POLE ASSEMBLY
	EA	EA	EA	EA	EA	EA	EA	EA	EA	EA	LF	LF	LF	EA	EA	EA	EA	EA	EA	EA	EA
WOLF RANCH	10	6	14	6	12		12	4		4	1190	1965	1400				2	1	3	1	4
WOLF LAKES	11	10	13	10	9	8	15	2	2		2310	3095	2870			1	2	1			5
I-35	5	4	5	4	4		3	4		9	135	350	865	2	1				1	2	1
PROJECT TOTALS	26	20	32	20	25	8	30	10	2	13	3635	5410	5135	2	1	1	4	2	4	3	10

SUMMARY OF TRAFFIC SIGNAL ITEMS																					
LOCATION	687 7002	687 7005	688 7001	688 7003	690 7024	690 7027	690 7030	690 7091	6001 7003	6001 7005	6005 7001	6006 7001	6006 7002	6006 7005	6006 7014	6006 7018	6007 7001	6013 7006	6014 7001	6014 7006	6017 7015
	PEDESTRIAN PUSH BUTTON POLE	REMOVE PED POLE ASSEMBLY	PED DETECT PUSH BUTTON (APS)	PED DETECTOR CONTROLLER UNIT	REMOVAL OF SIGNAL HEAD ASSM	REMOVAL OF SIGNAL RELATED SIGNS	REMOVAL OF PEDESTRIAN PUSH BUTTONS	REMOVE LED TRAF SIG LAMP UNIT	ILSN (8S)	ILSN (10S)	ITS COM CBL (ETHERNET)	VIVDS PROSR SYS	VIVDS CAM ASSY FXD LNS	VIVDS CNTRL SOFTWARE	VIVDS CAM ASSY (RELOCATE)	VIVDS CAM ASSY (REMOVE)	BBU SYSTEM (EXTERNAL BATTERY CABINET)	GROUND BOX (PREPARE)	ITS RADIO(SNGL)(5 GHZ)-I-U	RELOCATE ITS RADIO	VIDEO IMAGING AND RADAR DETECTOR
	EA	EA	EA	EA	EA	EA	EA	EA	EA	EA	LF	EA	EA	EA	EA	EA	EA	EA	EA	EA	EA
WOLF RANCH	1	2	8	1		3	2	2		4	1060				2	1	1	4		1	2
WOLF LAKES			8	1						4	1480	1	2	1			1		1		2
I-35			12	1	4	6	10	1	4	2	2050				1	4	1	11			4
PROJECT TOTALS	1	2	28	3	4	9	12	3	4	10	4590	1	2	1	3	5	3	15	1	1	8

SUMMARY OF TRAFFIC SIGNAL ITEMS			
LOCATION	6017 7016	6017 7018	6103 7001
	VIDEO IMAGING AND RADAR SET-UP SYS	VID IMAGE AND RADAR DET PROCESSOR SYS	MODIFY EXISTING ELECTRICAL SERVICE
	EA	EA	EA
WOLF RANCH	1	1	1
WOLF LAKES	1	1	
I-35	1	1	1
PROJECT TOTALS	3	3	2

SUMMARY OF SIGNING ITEMS				
LOCATION	644 7001	644 7004	644 7007	644 7065
	IN SM RD SN SUP&AM TY10BWG(1)SA (P)	IN SM RD SN SUP&AM TY10BWG(1)SA (T)	IN SM RD SN SUP&AM TY10BWG(1)SA (U)	RELOCATE SM RD SN SUP&AM TY 10BWG
	EA	EA	EA	EA
SH 29 BEGIN TO STA. 153+00	2			1
SH 29 STA. 153+00 TO STA. 159+00	5	3		
SH 29 STA. 159+00 TO STA. 165+00	3			5
SH 29 STA. 165+00 TO STA. 171+00	3			4
SH 29 STA. 171+00 TO STA. 177+00	6		1	1
SH 29 STA. 177+00 TO STA. 183+00	2	1		3
SH 29 STA. 183+00 TO END	1			
PROJECT TOTALS	22	4	1	14

SUMMARY OF PAVEMENT MARKING ITEMS																	
LOCATION	666 7018	666 7024	666 7036	666 7042	666 7066	666 7137	666 7172	666 7175	666 7177	666 7179	666 7184	666 7186	666 7194	666 7213	666 7221	666 7348	666 7352
	REFL PAV MRK TY I (W)8"(DOT)(100MIL)	REFL PAV MRK TY I (W)8"(SLD)(100MIL)	REFL PAV MRK TY I (W)24"(SLD)(100MIL)	REFL PAV MRK TY I (W)(ARROW)(100MIL)	REFL PAV MRK TY I (W)(WORD)(100MIL)	RE PV MRK TY I(BLACK)6"(SHADOW)(090ML)	RE PM TY II (W) 6" (BRK)	RE PM TY II (W) 6" (SLD)	RE PM TY II (W) 8" (DOT)	RE PM TY II (W) 8" (SLD)	RE PM TY II (W) 24" (SLD)	RE PM TY II (W) (ARROW)	RE PM TY II (W) (WORD)	RE PM TY II (Y) 6" (SLD)	RE PM TY II (Y) (CURB)	PAVEMENT SLER 8"	PAVEMENT SLER 24"
	LF	LF	LF	EA	EA	LF	LF	LF	LF	LF	LF	EA	EA	LF	LF	LF	LF
SH 29 BEGIN TO STA. 153+00	35	259		1	1		125		35	259		1	1				
SH 29 STA. 153+00 TO STA. 159+00	41	1727		10	10		297		41	1727		10	10				
SH 29 STA. 159+00 TO STA. 165+00	122	1413	1057	11	6		318	164	122	1413	1057	11	6	156			
SH 29 STA. 165+00 TO STA. 171+00	79	898		2	6		599		79	898		2	6				
SH 29 STA. 171+00 TO STA. 177+00	113	1616	927	17	10	206	593		113	1616	927	17	10	105		187	190
SH 29 STA. 177+00 TO STA. 183+00	69	994	76	3	6		532		69	994	76	3	6		325		
SH 29 STA. 183+00 TO STA. 190+00	23		365				27		23		365				100		
SH 29 STA. 190+00 TO END			164								164						
PROJECT TOTALS	482	6907	2589	44	39	206	2491	164	482	6907	2589	44	39	261	425	187	190

GEORGETOWN TEXAS
more than welcome

Kimley»Horn F-928

Texas Department of Transportation

SH 29

SUMMARY TABLES

SHEET 2 OF 3

CONT	SECT	JOB	HIGHWAY
0337	01	053	SH 29
DIST	COUNTY		SHEET NO.
AUS	WILLIAMSON		13

DATE: 1/5/2026 11:42:17 AM
FILE: pw://kh-pw.bentley.com:kh-pw-01/Documents/01 Active Projects/TX-GEO-069284005 - SH 29 Widening/4 - Design/Plan Set/1. General/SH29_K_GEN_SUM02.dgn

DW: CK: DW: CK:

CK:
DW:
CK:
DW:

SUMMARY OF PAVEMENT MARKING ITEMS

LOCATION	666 7353	666 7354	666 7408	666 7411	666 7423	668 7012	672 7004	672 7006	678 7002	678 7004	678 7008	678 7009	678 7016
	PAVEMENT SLER (ARROW)	PAVEMENT SLER (WORD)	REFL PAV MRK TY I (W)6"(BRK)(100MIL)	REFL PAV MRK TY I (W) 6" (SLD)	REFL PAV MRK TY I (Y) 6" (SLD)	PREFAB PM TY B (W)(6")(BRK)CONTRAST	REFL PAV MRKR TY II-A-A	REFL PAV MRKR TY II-C-R	PAV SURF PREP FOR MRK (6")	PAV SURF PREP FOR MRK (8")	PAV SURF PREP FOR MRK (24")	PAV SURF PREP FOR MRK (ARROW)	PAV SURF PREP FOR MRK (WORD)
	EA	EA	LF	LF	LF	LF	EA	EA	LF	LF	LF	EA	EA
SH 29 BEGIN TO STA. 153+00			125					22	125	294		1	1
SH 29 STA. 153+00 TO STA. 159+00			297					104	297	1768		10	10
SH 29 STA. 159+00 TO STA. 165+00			318	164	156			93	638	1535	1057	11	6
SH 29 STA. 165+00 TO STA. 171+00			599					79	599	977		2	6
SH 29 STA. 171+00 TO STA. 177+00	3	1	593		105	10		117	698	1729	927	17	10
SH 29 STA. 177+00 TO STA. 183+00			532				8	81	532	1063	76	3	6
SH 29 STA. 183+00 TO STA. 190+00			27				2	4	27	23	365		
SH 29 STA. 190+00 TO END											164		
PROJECT TOTALS	3	1	2491	164	261	10	10	500	2916	7389	2589	44	39

SUMMARY OF EROSION CONTROL ITEMS

LOCATION	100 7013	100 7015	160 7002	162 7002	164 7007	164 7012	168 7001	169 7002	506 7002	506 7004	506 7011	506 7020	506 7024	506 7039	506 7041	506 7044	506 7046
	TREE PROTECTION (INSTALL)	TREE PROTECTION (REMOVE)	FURN & PLACE TOPSOIL (4")	BLOCK SODDING	BROADCAST SEED (TEMP_WARM_COOL)	DRILL SEED (PERM_URBAN_CLAY)	VEGETATIVE WATERING	SOIL RET BLKT(SL_MOD_CLAY_LONG)	ROCK FILTER DAMS (INSTALL) (TY 2)	ROCK FILTER DAMS (INSTALL) (TY 4)	ROCK FILTER DAMS (REMOVE)	CONSTRUCTION EXITS (INSTALL) (TY 1)	CONSTRUCTION EXITS (REMOVE)	TEMP SEDMT CONT FENCE (INSTALL)	TEMP SEDMT CONT FENCE (REMOVE)	BIODEG EROSN CONT LOGS (INSTL) (12")	BIODEG EROSN CONT LOGS (REMOVE)
	EA	EA	SY	SY	SY	SY	TGL	SY	LF	LF	LF	SY	SY	LF	LF	LF	LF
SH 29 BEGIN TO STA. 153+00																164	164
SH 29 STA. 153+00 TO STA. 159+00			1163	1163	582	582	20	1163								1290	1290
SH 29 STA. 159+00 TO STA. 165+00			876	876	438	438	15	876				78	78			1569	1569
SH 29 STA. 165+00 TO STA. 171+00	7	7	1361	1361	681	681	23	1361								1761	1761
SH 29 STA. 171+00 TO STA. 177+00	6	6	976	976	488	488	17	976								1251	1251
SH 29 STA. 177+00 TO END	10	10	219	219	110	110	4	219				78	78			295	295
PROJECT TOTALS	23	23	4595	4595	2299	2299	79	4595	100	100	200	156	156	100	100	6330	6330

SUMMARY OF REMOVAL ITEMS

LOCATION	104 7001	104 7010	104 7011	104 7013	104 7016	104 7017	105 7016	354 7032	496 7019	752 7005	752 7006	752 7007	752 7008
	REMOV CONC (PAV)	REMOV CONC (PAVERS)	REMOV CONC (DRIVEWAYS)	REMOV CONC (SIDEWALK, RAMP OR SUP)	REMOV CONC (CURB)	REMOV CONC (CURB & GUTTER)	RMV (16"-20") TRT/UNTRT BASE & ASPH PAV	PLANE ASPH CONC PAV(0" TO 2")	REMOV STR (RET WALL)	TREE REMOVAL (4" - 12" DIA)	TREE REMOVAL (12" - 18" DIA)	TREE REMOVAL (18" - 24" DIA)	TREE REMOVAL (24" - 30" DIA)
	SY	SY	SY	SY	LF	LF	SY	SY	LF	EA	EA	EA	EA
SH 29 BEGIN TO STA. 153+00		682				362	34						
SH 29 STA. 153+00 TO STA. 159+00		872				326	41	5342					
SH 29 STA. 159+00 TO STA. 165+00		427	205	717	123	1132	278	6935					
SH 29 STA. 165+00 TO STA. 171+00		1485	139	652	91	1778	218	3712		1	5	2	
SH 29 STA. 171+00 TO STA. 177+00	2	267	135	855	81	1547	306	6035	135	2	2	1	
SH 29 STA. 177+00 TO STA. 183+00		1234		480		1133	125	3672		1			1
SH 29 STA. 183+00 TO STA. 189+00		245											
PROJECT TOTALS	2	5212	479	2704	295	6278	1002	25696	135	4	7	3	1

GEORGETOWN TEXAS
more than welcome

Kimley»Horn F-928

Texas Department of Transportation

SH 29

SUMMARY TABLES

SHEET 3 OF 3

CONT	SECT	JOB	HIGHWAY
0337	01	053	SH 29
DIST	COUNTY		SHEET NO.
AUS	WILLIAMSON		14

DATE: 1/21/2026 9:09:34 AM
FILE: pw://kh-pw.bentley.com:kh-pw-01/Documents/01 Active Projects/TX-GEO-069284005 - SH 29 Widening/4 - Design/Plan Set/1. General/SH29_K_GEN_SUM03.dgn

QUANTITY SUMMARY - SH 29 (UNIVERSITY AVE) AT BLUEBONNET PLAZA TRAFFIC SIGNAL INSTALLATION

TxDOT Bid Item	TxDOT Desc. Code	Description	Unit	Total Quantities
529	7002	CONC CURB (TY II)	LF	10
531	7010	CURB RAMPS (TY 7)	EA	1
618	7090	CONDUIT (PREPARE)	LF	2,155
620	7008	ELEC CONDR (NO. 8) INSULATED	LF	3,610
620	7009	ELEC CONDR (NO. 6) BARE	LF	2,155
620	7010	ELEC COND (NO. 6) INSULATED	LF	280
636	7001	ALUMINUM SIGNS (TY A)	SF	74
644	7001	IN SM RD SN SUP&AM TY10BWG(1)SA(P)	EA	1
644	7073	REMOVE SM RD SN SUP & AM	EA	1
666	7024	REFL PAV MRK TY I (W)8"(SLD)(100 MIL)	LF	104
666	7036	REFL PAV MRK TY I (W)24"(SLD)(100 MIL)	LF	365
666	7042	REFL PAV MRK TY I (W)(ARROW)(100 MIL)	EA	2
666	7066	REFL PAV MRK TY I (W)(WORD)(100 MIL)	EA	1
666	7347	PAVEMENT SLER 6"	LF	162
666	7348	PAVEMENT SLER 8"	LF	104
666	7352	PAVEMENT SLER 24"	LF	365
666	7353	PAVEMENT SLER (ARROW)	EA	2
666	7354	PAVEMENT SLER (WORD)	EA	1
666	7423	REFL PAV MRK TY I (Y)6"(SLD) (100 MIL)	LF	162
677	7001	ELIM EXT PM & MRKS (4")	LF	60
677	7004	ELIM EXT PM & MRKS (8")	LF	5
677	7008	ELIM EXT PM & MRKS (24")	LF	24
678	7002	PAV SURF PREP FOR MRK (6")	LF	162
678	7004	PAV SURF PREP FOR MRK (8")	LF	104
678	7008	PAV SURF PREP FOR MRK (24")	LF	365
678	7009	PAV SURF PREP FOR MRK (ARROW)	EA	2
678	7016	PAV SURF PREP FOR MRK (WORD)	EA	1
680	7002	INSTALL HWY TRF SIG (ISOLATED)	EA	1
682	7001	VEH SIG SEC (12") LED (GRN)	EA	9
682	7002	VEH SIG SEC (12") LED (GRN ARW)	EA	4
682	7003	VEH SIG SEC (12") LED (YEL)	EA	9
682	7004	VEH SIG SEC (12") LED (YEL ARW)	EA	8
682	7005	VEH SIG SEC (12") LED (RED)	EA	9
682	7006	VEH SIG SEC (12") LED (RED ARW)	EA	4
682	7018	PED SIG SEC (LED) (COUNTDOWN)	EA	6
682	7042	BACKPLATE W/REF BRDR(3 SEC)(VENT)ALUM	EA	9
682	7043	BACKPLATE W/REF BRDR(4 SEC)(VENT)ALUM	EA	4
684	7031	TRF SIG CBL (TY A) (14 AWG) (5 CONDR)	LF	3,406
684	7033	TRF SIG CBL (TY A) (14 AWG) (7 CONDR)	LF	1,043
684	7079	TRF SIG CBL (TY C) (12 AWG) (2 CONDR)	LF	1,160
686	7328	INS TRF SIG PL AM (S) 1 ARM (32')MAST ONLY	EA	1
686	7329	INS TRF SIG PL AM (S) 1 ARM (44')MAST ONLY	EA	2
686	7330	INS TRF SIG PL AM (S) 1 ARM (48')MAST ONLY	EA	1
688	7001	PED DETECT PUSH BUTTON (APS)	EA	6
688	7003	PED DETECTOR CONTROLLER UNIT	EA	1
6001	7005	ILSN (10S)	EA	2
6007	7001	BBU SYSTEM (EXTERNAL BATT CABINET)	EA	1
6006	7001	VIVDS PROSR SYS	EA	1
6006	7002	VIVDS CAM ASSY FXD LNS	EA	4
6006	7005	VIVDS CNTRL SOFTWAE	EA	1
6006	7007	VIVDS CABLING	LF	1,012
6013	7006	GROUND BOX (PREPARE)	EA	5
**		THRUGREEN COMMUNICATION SYSTEM	LS	1

** PAID FOR SUBSIDIARY TO ITEM 680-7002.

STATE OF TEXAS
CHRISTOPHER J. PIERCE
92541
LICENSED PROFESSIONAL ENGINEER

Digitally signed by Christopher Pierce
Date: 2026.01.08 11:42:14-06'00'

CHRISTOPHER J. PIERCE, P.E.

LEE ENGINEERING
3030 LBJ FREEWAY, SUITE 1660
DALLAS, TX 75234
972.248.3006
TBPE FIRM #F-450

SH 29 (UNIVERSITY AVE)
AT BLUEBONNET PLAZA

QUANTITY SUMMARY

STATE	CITY	COUNTY	HIGHWAY NO.	SHEET NO.
TEXAS	GEORGETOWN	WILLIAMSON	SH 29	15

CK:
DW:
CC:
DW:

SUMMARY OF DRAINAGE ITEMS

LOCATION	401 7001	402 7001	464 7003	464 7005	464 7007	464 7009	464 7011	464 7042	465 7005	465 7006	465 7011	465 7013	465 7014
	FLOWABLE BACKFILL	TRENCH EXCAVATION PROTECTION	RC PIPE (CL III)(18 IN)	RC PIPE (CL III)(24 IN)	RC PIPE (CL III)(30 IN)	RC PIPE (CL III)(36 IN)	RC PIPE (CL III)(48 IN)	RC PIPE (ARCH)(CL III)(DES 3)	JCTBOX(COMPL)(PJB)(3FTX3FT)	JCTBOX(COMPL)(PJB)(4FTX4FT)	JCTBOX(COMPL)(PJB)(6FTX6FT)	INLET (COMPL)(PCO)(3FT)(NONE)	INLET (COMPL)(PCO)(3FT)(LEFT)
	CY	LF	LF	LF	LF	LF	LF	LF	EA	EA	EA	EA	EA
SH 29 STA. 153+00 TO 159+00													
SH 29 STA. 159+00 TO 165+00		19		31						1			
SH 29 STA. 165+00 TO 171+00	6	1135	551	183	120	263			1			1	2
SH 29 STA. 171+00 TO 177+00	6	502	219	107		201	213				2		
SH 29 STA. 177+00 TO END		719	395				272				1		
WLD BEGIN TO END								8					
PROJECT TOTALS	12	2375	1165	321	120	464	485	8	1	1	3	1	2

SUMMARY OF DRAINAGE ITEMS

LOCATION	465 7016	465 7017	465 7018	465 7026	465 7031	476 7011	479 7001	479 7006	4036 7001	496 7002	496 7007
	INLET (COMPL)(PCO)(3FT)(BOTH)	INLET (COMPL)(PCO)(4FT)(NONE)	INLET (COMPL)(PCO)(4FT)(LEFT)	INLET (COMPL)(PCO)(6FT)(LEFT)	INLET (COMPL)(PCU)(3FT)(RIGHT)	JACK BOR OR TUN PIPE(24 IN)(RC)(CL III)	ADJUSTING MANHOLES	ADJUSTING INLET (CAP)	SWAQ-110 BYPASS	REMOV STR (INLET)	REMOV STR (PIPE)
	EA	EA	EA	EA	EA	LF	LF	EA	EA	EA	LF
SH 29 STA. 153+00 TO 159+00											
SH 29 STA. 159+00 TO 165+00					1		1	1			
SH 29 STA. 165+00 TO 171+00		1	3		3					5	553
SH 29 STA. 171+00 TO 177+00			2	2	2	99				4	564
SH 29 STA. 177+00 TO END				3	3				1	2	490
WLD BEGIN TO END	1							1			
PROJECT TOTALS	1	1	5	5	9	99	1	2	1	11	1607

DATE: 9/24/2025 10:33:02 AM
FILE: pw://kh-pw.bentley.com:kh-pw-01/Documents/01 Active Projects/TX-GEO-069284005 - SH 29 Widening/4 - Design/Plan Set/1. General/SH29_T_GEN_DRN_SUM01.dgn

GEORGETOWN TEXAS
more than welcome

THE ESTES GROUP
TBPE FIRM REG. NO. F-20926

Texas Department of Transportation

SH 29
DRAINAGE
SUMMARY TABLES

SHEET 1 OF 1

CONT	SECT	JOB	HIGHWAY
0337	01	053	SH 29
DIST	COUNTY		SHEET NO.
AUS	WILLIAMSON		16

DW:	CK:	DW:	CK:

DATE: 12/18/2025 1:38:10 PM
FILE: pw://kh-pw.bentley.com:kh-pw-01/Documents/01 Active Projects/TX-GEO-069284005 - SH 29 Widening/4 - Design/Plan Set/1. General/SH29_K_GEN_SUM04.dgn

SUMMARY OF EARTHWORK

LOCATION	110 7001	132 7003
	EXCAVATION (ROADWAY)	EMBANKMENT (FNL)(OC)(TY B)
	CY	CY
SH 29 STA. 149+00.00	0	0
SH 29 STA. 150+00.00	48	0
SH 29 STA. 151+00.00	112	0
SH 29 STA. 152+00.00	131	0
SH 29 STA. 153+00.00	161	0
SH 29 STA. 154+00.00	208	0
SH 29 STA. 155+00.00	199	0
SH 29 STA. 156+00.00	102	0
SH 29 STA. 157+00.00	18	0
SH 29 STA. 158+00.00	0	0
SH 29 STA. 159+00.00	0	0
SH 29 STA. 160+00.00	42	0
SH 29 STA. 161+00.00	117	15
SH 29 STA. 162+00.00	133	54
SH 29 STA. 163+00.00	152	82
SH 29 STA. 164+00.00	255	154
SH 29 STA. 165+00.00	379	164
SH 29 STA. 166+00.00	459	98
SH 29 STA. 167+00.00	527	90
SH 29 STA. 168+00.00	551	77
SH 29 STA. 169+00.00	497	66
SH 29 STA. 170+00.00	420	85
SH 29 STA. 171+00.00	327	95
SH 29 STA. 172+00.00	292	81
SH 29 STA. 173+00.00	335	81
SH 29 STA. 174+00.00	236	44
SH 29 STA. 175+00.00	212	30
SH 29 STA. 176+00.00	289	72
SH 29 STA. 177+00.00	256	79
SH 29 STA. 178+00.00	256	71
SH 29 STA. 179+00.00	333	53
SH 29 STA. 180+00.00	390	47
SH 29 STA. 181+00.00	298	28
SH 29 STA. 182+00.00	117	1
SH 29 STA. 183+00.00	6	7
SH 29 STA. 184+00.00	3	10
SH 29 STA. 185+00.00	9	3
PROJECT TOTALS	7870	1587

GEORGETOWN TEXAS
more than welcome

Kimley»Horn F-928

Texas Department of Transportation

SH 29

EARTHWORK SUMMARY TABLE

SHEET 1 OF 1

CONT	SECT	JOB	HIGHWAY
0337	01	053	SH 29
DIST	COUNTY		SHEET NO.
AUS	WILLIAMSON		17

CK:
DW:
CK:
DW:

DATE: 1/7/2026 9:53:57 AM
FILE: pw://kh-pw.bentley.com:kh-pw-01/Documents/01 Active Projects/TX-GEO-069284005 - SH 29 Widening/4 - Design/Plan Set/2. TCP/SH29_K_TCP_NAR.dgn

BARRICADES, WARNING SIGNS, SEQUENCE OF WORK, ETC.

1. GENERAL

TRAFFIC MUST BE HANDLED THROUGHOUT THE PROJECT DURING CONSTRUCTION. THE CONTRACTOR IS RESPONSIBLE FOR PROVIDING A SAFE AND COMFORTABLE PASSAGE FOR VEHICULAR AND PEDESTRIAN TRAFFIC WITH MINIMAL INCONVENIENCE TO THE PUBLIC, AS SHOWN IN THE PLANS OR AS DIRECTED/APPROVED BY THE ENGINEER.

THE CONTRACTOR MAY PROPOSE/RECOMMEND MODIFICATIONS TO THE SEQUENCE OF WORK FOR CONSIDERATION BY THE ENGINEER. ANY MAJOR RECOMMENDED MODIFICATION BY THE CONTRACTOR SHALL INCLUDE ANY CHANGES TO THE VARIOUS BID ITEMS, IMPACT TO TRAFFIC, EFFECT OF OVERALL PROJECT IN TIME AND COST, ETC. IF THIS PROPOSAL IS IMPLEMENTED, THE CONTRACTOR WILL BE RESPONSIBLE FOR DEVELOPING DETAILED PLAN SHEETS TO BE SEALED BY A LICENSED PROFESSIONAL ENGINEER FOR INCLUSION WITH THE CHANGE ORDER. THE CONTRACTOR CANNOT PROCEED WITH ANY CONSTRUCTION OPERATIONS BASED ON A REVISED PHASE/SEQUENCE UNTIL WRITTEN APPROVAL IS OBTAINED FROM THE ENGINEER. IF AT ANY TIME DURING CONSTRUCTION THE CONTRACTOR'S PROPOSED PLAN OF OPERATION FOR HANDLING TRAFFIC DOES NOT PROVIDE FOR SAFE AND COMFORTABLE MOVEMENT, THE CONTRACTOR WILL IMMEDIATELY CHANGE THEIR OPERATION TO CORRECT THE UNSATISFACTORY CONDITION.

DO NOT STORE ANY CONSTRUCTION MATERIAL OR EQUIPMENT AT ANY LOCATION THAT WILL CONSTITUTE A HAZARD AND WILL ENDANGER TRAFFIC.

THE CONTRACTOR WILL PROVIDE ADVANCE NOTIFICATION TO THE ENGINEER AND CITY OF IMPENDING/ UPCOMING LANE CLOSURES FOR ALL TEMPORARY AND / OR PERMANENT LANE, SHOULDER, ETC. CLOSURES OR DETOURS.

CONTRACTOR TO FIELD VERIFY ALL UTILITIES HORIZONTALLY AND VERTICALLY PRIOR TO CONSTRUCTION.

ACCESS TO ADJOINING PROPERTY MUST BE MAINTAINED AT ALL TIMES. PROPERTY OWNERS TO BE NOTIFIED AT LEAST 48 HOURS IN ADVANCE OF WORK ON THEIR DRIVEWAYS.

TEMPORARY DRAINAGE IS THE RESPONSIBILITY OF THE CONTRACTOR.

AT NO TIME SHALL AN INTERSECTION OR DRIVEWAY BE COMPLETELY CLOSED DURING CONSTRUCTION. EACH INTERSECTION OR DRIVEWAY SHALL BE PHASE CONSTRUCTED TO MAINTAIN ACCESS FOR PROPERTY OWNERS. COORDINATE WITH TXDOT IF SIGNAGE IS REQUIRED TO DESIGNATE AT DRIVEWAY LOCATIONS. IF REQUIRED BY TXDOT, CONTRACTOR TO PROVIDE ACCESS SIGNS AT ALL TIMES DURING CONSTRUCTION.

ALL CONSTRUCTION AND CONSTRUCTION RELATED ACTIVITIES WILL BE PERFORMED UTILIZING A STANDARD WORK WEEK. NIGHT TIME WORK AND LANE CLOSURES WILL ONLY BE ALLOWED BETWEEN 8:00PM TO 5:00AM AS APPROVED BY THE CITY AND ENGINEER.

REMOVAL AND DISPOSAL OF EXISTING ABANDONED UTILITIES (EITHER PREVIOUSLY ABANDONED OR ABANDONED DURING THIS PROJECT) REQUIRED TO SUPPORT THIS PROJECT'S CONSTRUCTION SHALL BE PERFORMED UNDER THE OVERALL PREPARE RIGHT-OF-WAY ITEM.

COVER PERMANENT SIGNS IF NOT USED. THIS IS SUBSIDIARY TO BARRICADES, SIGNS AND TRAFFIC HANDLING ITEMS.

PRIOR TO EACH PHASE, CONTRACTOR TO ADJUST PROJECT BARRICADES, SIGNS AND STORM WATER POLLUTION PREVENTION MEASURES AS NECESSARY.

CONTRACTOR TO INFORM TxDOT AREA OFFICE 10 BUSINESS DAYS PRIOR TO ANY LANE CLOSURES ON SH 29 AS SHOWN IN PLANS.

UTILIZE TXDOT STANDARD WZ (BTS-2)-13 FOR SIDEWALK AND DETOURS, SIDEWALKS SHALL NOT BE CLOSED FOR PERIODS OF MORE THAN 7 DAYS, UNLESS OTHERWISE APPROVED BY THE ENGINEER. CONTRACTOR TO PROVIDE SAFETY FENCE TO SEPARATE COSNTRUCTION AREAS FROM PEDESTRIAN. CONTRACTOR SHALL PHASE CONSTRUCT AND UTILIZE EXISTING RAMPS TO MAINTAIN PEDESTRIAN CROSSINGS.

THE CONTRACTOR SHALL NOT WORK IN ANY AREAS WHERE ROW AND UTILITY CONFLICTS HAVE NOT BEEN RESOLVED.

2. SEQUENCE OF WORK

THIS PROJECT WILL BE CONSTRUCTED IN (8)PHASES. BEFORE THE COMMENCEMENT OF EACH PHASE, VERIFY ROW HAS BEEN ACQUIRED, INSTALL ADVANCE WARNING SIGNS, TEMPORARY SIGNS AND BARRICADES AS SHOWN ON THE PLANS AND/OR AS DIRECTED/APPROVED BY THE ENGINEER. THE CONTRACTOR MAY NOT CONSTRUCT OUT OF SEQUENCE UNLESS DIRECTED/APPROVED BY THE ENGINEER . LANE CLOSURES WILL BE USED IN ACCORDANCE WITH STATE TCP STANDARDS. DROP OFF CONDITIONS OF GREATER THAN 2" MUST HAVE A 3:1 SLOPE AT THE END OF EACH DAY, AS WELL AS THROUGHOUT THE PROJECT WHERE ACCESS TO ADJACENT PROPERTIES IS ALLOWED TO DRIVEWAYS AND SIDE STREETS.

CONTRACTOR TO EXECUTE TCP IN ORDER AND WORK MAY NOT BEGIN UNTIL ROW AND UTILITIES ARE CLEAR.

PREPARING ROW / REMOVAL OF EXISTING ITEMS TO BE DONE ONLY IN AREAS WHERE WORK IS OCCURRING, AS PER THE PHASES NOTED BELOW.

CONTRACTOR TO INSTALL R10-7 "DO NOT BLOCK INTERSECTION" SIGNS AT EACH INTERSECTION DURING CONSTRUCTION, CONSIDERED SUBSIDIARY TO ITEM 502-7001.

PLANING, SURFACE TREATMENTS AND OVERLAYS SHALL BE PERFORMED IN THE DIRECTION OF TRAFFIC. MAINTAIN POSITIVE DRAINAGE DURING CONSTRUCTION TO AVOID WATER PONDING ISSUES. A BRIEF DESCRIPTION OF THESE PHASES ARE AS FOLLOWS:

PHASE I - CONSTRUCT SH 29 MEDIAN ROAD IMPROVEMENTS FROM 1,060' WEST OF WOLF RANCH PARKWAY TO 370' WEST OF IH 35 SB FRONTAGE ROAD.

PHASE II - CONSTRUCT THE WB RIGHT-TURN/THRU LANE OF THE SH 29 ROAD IMPROVEMENTS FROM WOLF RANCH PARKWAY TO 370' WEST OF IH 35 SB FRONTAGE ROAD, INCLUDING DRIVEWAYS FOR THE NORTH SIDE AS SHOWN IN THE PLANS.

PHASE III - CONSTRUCT THE EB RIGHT-TURN/THRU LANE OF THE SH 29 ROAD IMPROVEMENTS FROM WOLF RANCH PARKWAY TO WEST OF IH 35 SB FRONTAGE ROAD AS SHOWN IN PLANS.

PHASE IV - CONSTRUCT WOLF RANCH PKWY, WOLF LAKES DR, IH-35 SBFR AND NBFR, AND BLUEBONNET PLAZA SIGNAL IMPROVEMENTS, AND PED RAMPS AS SHOWN IN THE PLANS.

PHASE V - CONSTRUCT WOLF LAKES DR WIDENING AS SHOWN IN THE PLANS. PHASE CAN BE COMBINED WITH PH 4 IF ROW HAS BEEN ACQUIRED.

PHASE VI - CONSTRUCT THE SIDEWALK ALONG WB SH29 AND WOLF LAKES DR. PHASE CAN BE COMBINED WITH PH 2 IF ROW HAS BEEN ACQUIRED.

PHASE VII - CONSTRUCT THE SUP ALONG EB SH29 AND WOLF LAKES DR. PHASE CAN BE COMBINED WITH PH 3 IF ROW HAS BEEN ACQUIRED.

PHASE VIII - CONSTRUCT THE FINAL 1.5" OF SMA-D PAVEMENT SURFACE AND FINAL PAVEMENT MARKINGS FROM 1,060' WEST OF WOLF RANCH PARKWAY TO 370' WEST OF IH 35 SB FRONTAGE ROAD.

APPROVED TXDOT STANDARDS AND ATTACHED TCP TYPICAL SECTIONS SHOULD BE USED.

PORTABLE MESSAGE BOARDS TO PROVIDE A MINIMUM 10 DAY ADVANCE NOTICE OF TRAFFIC CHANGES.

PHASE I

THE INTENT OF PHASE I IS TO EXTEND SH 29 LEFT-TURN LANES BY RECONSTRUCTING THE MEDIAN. THE FULL PAVEMENT SECTION, UP TO BUT NOT INCLUDING THE FINAL 1.5" OF SMA-D, WILL BE CONSTRUCTED FOR SH 29. NIGHT TIME LANE CLOSURES MAY BE UTILIZED TO KEEP EXISTING DUAL LEFT TURN LANES OPEN DURING PEAK TRAFFIC HOURS, AS APPROVED BY THE CITY AND ENGINEER.

-MOBILIZATION
-SET UP PROJECT BARRICADES AND SIGNS
-PLACE STORM WATER POLLUTION PREVENTION MEASURES ALONG THE CONSTRUCTION ZONE.
-REMOVE EXIST PAVEMENT MARKINGS IN CONFLICT, INSTALL WORKZONE MARKINGS, AND SHIFT TRAFFIC AS SHOWN IN THE PLANS.
-CONSTRUCT LEFT-TURN LANE EXTENSIONS, PROPOSED CURB, AND MEDIAN 5" COLORED TEXTURED CONCRETE AS SHOWN IN PLANS.
-CONSTRUCT MEDIAN 5" COLORED TEXTURED CONCRETE AT TURN LANES USING NIGHT TIME LANE CLOSURES.
-PHASE I MUST BE COMPLETED PRIOR TO STARTING PHASE II.

PHASE II

THE INTENT OF PHASE II IS TO CONSTRUCT SH 29 WB WIDENING ONLY. THE FULL PAVEMENT SECTION, UP TO BUT NOT INCLUDING THE FINAL 1.5" OF SMA-D, WILL BE CONSTRUCTED FOR SH 29.

-REMOVE EXIST PAVEMENT MARKINGS IN CONFLICT WITH THIS PHASE & INSTALL WORKZONE MARKINGS, AND SHIFT WB TRAFFIC AS SHOWN IN THE PLANS.
-INSTALL LOW PROFILE BARRIER AS SHOWN IN THE PLANS.
-CONSTRUCT STORM DRAIN INLETS AND PIPE AS SHOWN IN PLANS. CONTRACTOR SHALL BORE PROPOSED 24" RCP LATERAL UNDER SH 29 AS SHOWN IN THE PLANS.
-CONSTRUCT TEMPORARY DITCH ON THE SOUTH SIDE OF SH 29. REMOVE INLETS, LEAVE OPENING IN EXISTING CURB & GUTTER AS SHOWN IN PLANS, AND GRADE TO TEMPORARY DITCH TO INLET PCU US29 D-5.
-CONSTRUCT PROPOSED CURB AND SH 29 WIDENING AS SHOWN IN THE PLANS.
-PHASE CONSTRUCT DRIVEWAYS TO MAINTAIN ACCESS AT ALL TIMES.
-PHASE II MUST BE COMPLETED PRIOR TO STARTING PHASE III.

PHASE III

THE INTENT OF PHASE III IS TO CONSTRUCT SH 29 EB WIDENING. THE FULL PAVEMENT SECTION, UP TO BUT NOT INCLUDING THE FINAL 1.5" OF SMA-D, WILL BE CONSTRUCTED FOR SH 29.

-REMOVE EXIST PAVEMENT MARKINGS IN CONFLICT WITH THIS PHASE & INSTALL WORKZONE MARKINGS, AND SHIFT WB TRAFFIC AS SHOWN IN THE PLANS.
-ADJUST STORM WATER POLLUTION PREVENTION MEASURES ALONG THE CONSTRUCTION ZONE.
-INSTALL LOW PROFILE BARRIER AS SHOWN IN THE PLANS.
-CONSTRUCT STORM DRAIN INLETS AND PIPE AS SHOWN IN PLANS.
-CONSTRUCT PROPOSED CURB, AND SH 29 WIDENING AS SHOWN IN THE PLANS.
-PHASE III MUST BE COMPLETED PRIOR TO STARTING PHASE IV.

PHASE IV

THE INTENT OF PHASE IV IS TO CONSTRUCT WOLF RANCH PARKWAY SIGNAL POLES, WOLF LAKES DR SIGNAL POLES, IH-35 SBFR AND NBFR SIGNAL IMPROVEMENTS, BLUEBONNET PLAZA SIGNAL IMPROVEMENTS, PED RAMPS, AND RADIUS RETURN. THE FULL PAVEMENT SECTION, UP TO BUT NOT INCLUDING THE FINAL 1.5" OF SMA-D, WILL BE CONSTRUCTED FOR SH 29. THIS WORK WILL NOT BEGIN UNTIL ROW HAS BEEN ACQUIRED.

-REMOVE EXIST PAVEMENT MARKINGS IN CONFLICT WITH THIS PHASE & INSTALL WORKZONE MARKINGS, AND SHIFT WB TRAFFIC AS SHOWN IN THE PLANS.
-ADJUST STORM WATER POLLUTION PREVENTION MEASURES ALONG THE CONSTRUCTION ZONE.
-INSTALL CHANNELIZING DEVICES AS SHOWN IN THE PLANS.
-CONSTRUCT STORM DRAIN INLETS AND PIPE AS SHOWN IN PLANS.
-CONSTRUCT PROPOSED WOLF RANCH PARKWAY SIGNAL POLES AND PED RAMPS.
-CONSTRUCT PROPOSED WOLF LAKES DR SIGNAL POLES, PED RAMPS, AND RADIUS RETURN.
-CONSTRUCT PROPOSED BLUEBONNET PLAZA SIGNAL IMPROVEMENTS.
-CONSTRUCT IH-35 SBFR AND NBFR SIGNAL IMPROVEMENTS PER WZ(BTS)(1-2)-13 STANDARDS.
-PHASE IV MUST BE COMPLETED PRIOR TO STARTING PHASE V.

PHASE V

THE INTENT OF PHASE V IS TO CONSTRUCT WOLF LAKES DR WIDENING AND SIDEWALK AS SHOWN IN THE PLANS. FOR THE WOLF LAKES DR RIGHT TURN LANE CONSTRUCT FULL CONCRETE SECTION. FOR THE SH 29 FULL PAVEMENT SECTION, BUILD UP TO BUT NOT INCLUDING THE FINAL 1.5" OF SMA-D. THIS WORK WILL NOT BEGIN UNTIL ROW HAS BEEN ACQUIRED.

-ADVANCE WARNING SIGNS EAST OF WOLF LAKES DR FROM PHASE I TO REMAIN FOR PHASE II.
-ADJUST STORM WATER POLLUTION PREVENTION MEASURES ALONG THE CONSTRUCTION ZONE.
-ADJUST PHASE I LOW PROFILE BARRIER WITH BARRELS IN PHASE II AS SHOWN IN THE PLANS.
-PHASE I WORK ZONE PAVEMENT MARKINGS TO REMAIN FOR PHASE II
-REMOVE EXIST PAVEMENT MARKINGS IN CONFLICT WITH THIS PHASE, INSTALL WORKZONE MARKINGS, AND SHIFT SB TRAFFIC AS SHOWN IN THE PLANS.
-CONSTRUCT STORM DRAIN INLETS AND PIPE AS SHOWN IN PLANS.
-CONSTRUCT PROPOSED CURB, SIDEWALK, AND WOLF LAKES DR WIDENING AS SHOWN IN THE PLANS.
-PHASE V MUST BE COMPLETED PRIOR TO STARTING PHASE VI.

PHASE VI

THE INTENT OF PHASE VI IS TO CONSTRUCT THE WB SIDEWALK ALONG SH29. THIS WORK WILL NOT BEGIN UNTIL ROW HAS BEEN ACQUIRED.

-ADJUST STORM WATER POLLUTION PREVENTION MEASURES ALONG THE CONSTRUCTION ZONE.
-CONSTRUCT PROPOSED SIDEWALK AND RAMPS AS SHOWN IN THE PLANS.

PHASE VII

THE INTENT OF PHASE VII IS TO CONSTRUCT THE EB SUP ALONG SH29. THIS WORK WILL NOT BEGIN UNTIL ROW HAS BEEN ACQUIRED.

-ADJUST STORM WATER POLLUTION PREVENTION MEASURES ALONG THE CONSTRUCTION ZONE.
-CONSTRUCT PROPOSED SUP AND RAMPS AS SHOWN IN THE PLANS.

PHASE VIII

THE INTENT OF PHASE VIII IS TO CONSTRUCT THE FINAL RIDING SURFACE AND PAVEMENT MARKINGS FOR SH 29 USING MOBILE OPERATIONS.

-MILL OFF 1.5" OF EXISTING HMA.
-CONSTRUCT FINAL 1.5" OF SMA-D THROUGHOUT THE LIMITS OF THE PROJECT UTILIZING TCP (3-2)-13, TCP(3-3)-14, AND TCP (3-4)-13.
-PLACE FINAL TY II PAVEMENT MARKINGS AS SHOWN IN THE PLANS.
-WAIT A MINIMUM OF 10 DAYS BEFORE PLACING FINAL TY I PAVEMENT MARKINGS AS SHOWN IN THE PLANS.
-INSTALL PERMANENT SIGNS AS SHOWN IN THE PLANS.
-PLACE TOPSOIL AND PERMANENT SEEDING.
-AFTER THE ESTABLISHMENT OF VEGETATION, REMOVE ALL TEMPORARY EROSION CONTROL MEASURES AND RESEED ANY AREAS DISTURBED BY THEIR REMOVAL.
-PERFORM FINAL CLEANUP.
-OPEN TO TRAFFIC UNRESTRICTED.

3. SAFETY

THE CONTRACTOR WILL PROVIDE, CONSTRUCT AND MAINTAIN BARRICADES AND SIGNS IN ACCORDANCE WITH STATE STANDARDS BC(1-12)-21. ANY SIGNS REQUIRED THAT ARE NOT DETAILED IN THE STANDARD SHEETS SHALL BE IN CONFORMANCE WITH THE "TEXAS MANUAL ON UNIFORM TRAFFIC CONTROL DEVICES FOR STREETS AND HIGHWAYS" AND THE "STANDARD HIGHWAY SIGN DESIGNS FOR TEXAS."

BARRICADES AND WARNING SIGNS SHALL BE PLACED AS INDICATED ON THE PLANS. THIS SHALL BE CONSIDERED THE MINIMUM REQUIRED TO PROVIDE FOR THE SAFETY OF TRAFFIC DURING CONSTRUCTION. THE CONTRACTOR SHALL PROVIDE AND MAINTAIN OTHER SUCH BARRICADES AND SIGNS DEEMED NECESSARY BY THE ENGINEER OR AS DIRECTED BY FIELD CONDITIONS TO PROVIDE FOR THE SAFE PASSAGE OF TRAFFIC AT ALL TIMES.

THE CONTRACTOR SHALL PROVIDE AND MAINTAIN FLAGGERS AS DIRECTED/ APPROVED BY THE ENGINEER, AT SUCH POINTS, AND FOR SUCH PERIODS OF TIME AS MAY BE REQUIRED, TO PROVIDE FOR THE SAFETY OF THE TRAVELING PUBLIC AND THE CONTRACTOR'S PERSONNEL.

THE CONTRACTOR SHALL KEEP THE ROADWAY CLEAN AND FREE OF DIRT OR OTHER MATERIALS DURING THE HAULING OPERATIONS. IF THE CONTRACTOR DOES NOT MAINTAIN A CLEAN ROADWAY, THEY SHALL CEASE ALL CONSTRUCTION OPERATIONS, WHEN DIRECTED BY THE ENGINEER, TO CLEAN THE ROADWAY TO THE SATISFACTION OF THE ENGINEER.

4. HAULING EQUIPMENT

THE USE OF RUBBER -TIRED EQUIPMENT WILL BE REQUIRED FOR MOVING DIRT OR OTHER MATERIALS ALONG OR ACROSS PAVED SURFACES. WHERE THE CONTRACTOR DESIRES TO MOVE ANY EQUIPMENT NOT LICENSED FOR OPERATION ON PUBLIC HIGHWAYS, ON OR ACROSS PAVEMENT, THEY SHALL PROTECT THE PAVEMENT FROM DAMAGE AS DIRECTED/APPROVED BY THE ENGINEER.

THROUGHOUT CONSTRUCTION OPERATIONS, THE CONTRACTOR WILL BE REQUIRED TO CONDUCT THEIR HAULING OPERATION IN A MANNER SUCH THAT VEHICLES WILL NOT HAUL OVER PERVIOUSLY RE-COMPACTED SUBGRADE OR COMPACTED BASE MATERIAL, EXCEPT IN SHORT SECTIONS FOR DUMPING MANIPULATIONS.

5. FINAL CLEAN UP

UPON COMPLETION OF THE WORK AND BEFORE FINAL ACCEPTANCE AND FINAL PAYMENT IS MADE. THE CONTRACTOR SHALL CLEAR AND REMOVE FROM THE SITE ALL SURPLUS AND DISCARDED MATERIALS AND DEBRIS OF EVERY KIND AND LEAVE THE ENTIRE PROJECT IN A SMOOTH, NEAT, AND SIGHTLY CONDITION.

6. PAYMENT

ALL BARRICADES, SIGNS, AND FLAGGERS SHALL BE SUBSIDIARY TO BARRICADES, SIGN AND TRAFFIC HANDLING. ALL WORK ZONE PAVEMENT MARKINGS WILL BE PAID FOR UNDER WORK ZONE PAVEMENT MARKINGS. ALL OTHER WORK AND MATERIALS SHALL BE SUBSIDIARY TO THE VARIOUS BID ITEMS UNLESS OTHERWISE INDICATED IN THE PLANS.

1/7/2026

STATE OF TEXAS
TYLER G. MITCHELL
139240
LICENSED
PROFESSIONAL ENGINEER

GEORGETOWN TEXAS
more than welcome

Kimley»Horn F-928

Texas Department of Transportation

SH 29

TRAFFIC CONTROL PLAN NARRATIVE

SHEET 1 OF 1

CONT	SECT	JOB	HIGHWAY
0337	01	053	SH 29
DIST	COUNTY		SHEET NO.
AUS	WILLIAMSON		18

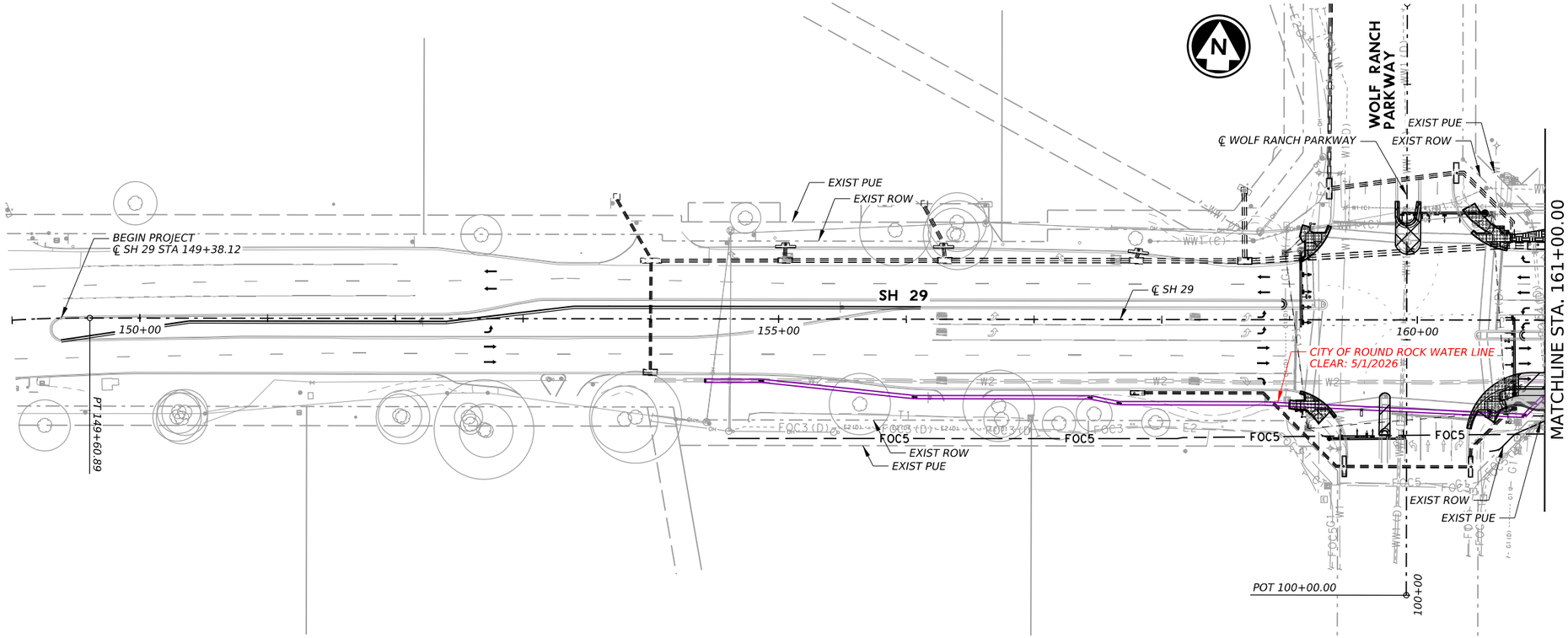

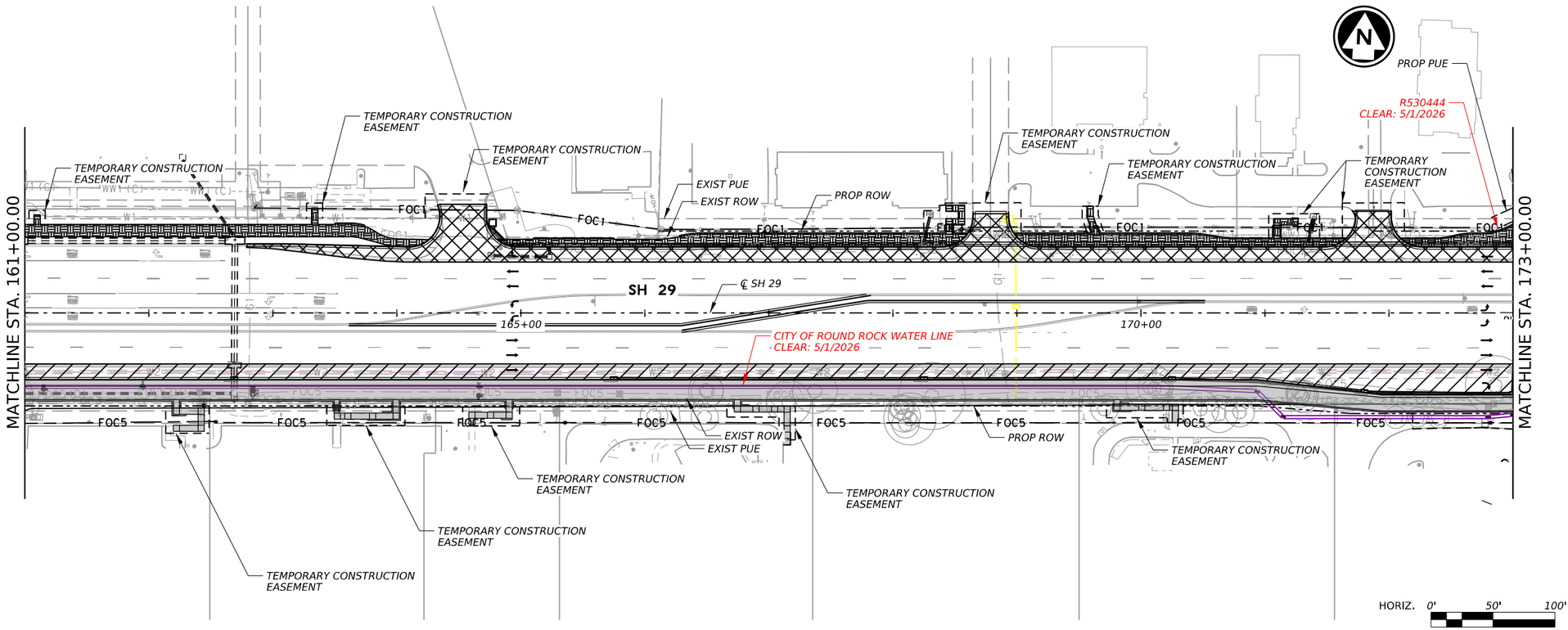

LEGEND

- PHASE 2
- PHASE 3
- PHASE 4
- PHASE 5
- PHASE 6
- PHASE 7

NOTES:

THE PURPOSE OF THESE PLANS IS TO PROVIDE AN OVERVIEW OF THE EXPECTED UTILITY ACCOMODATIONS ON THIS PROJECT. THESE PLANS SHOW, WHAT TXDOT BELIEVES TO BE, THE APPROXIMATE LOCATIONS AND ESTIMATED CLEAR DATES OF THE EXISTING UTILITITES, AND PROPOSED RELOCATIONS, OR ADJUSTMENTS. THESE PLANS ARE PROVIDED FOR INFORMATION PURPOSES ONLY AND SHOULD NOT BE SOLELY RELIED UPON WITHOUT FIELD VERIFICATION.

THE LOCATIONS OF EXISTING AND PROPOSED WATER MAINS, GAS MAINS, STORM SEWERS, SANITARY SEWERS, ELECTRIC, FIBER OPTICS LINES, AND OTHER UTILITIES AS SHOWN ON THESE PLANS ARE BASED ON THE BEST INFORMATION AVAILABLE TO TXDOT AND MAY NOT INCLUDE ALL UTILITIES ACTUALLY LOCATED WITHIN THE PROJECT. THE INFORMATION SHOWN CONCERNING TYPE AND LOCATION OF UTILITIES IS NOT GUARANTEED TO BE ACCURATE OR ALL INCLUSIVE. IT SHALL BE THE CONTRACTOR'S RESPONSIBILITY TO FIELD VERIFY ALL EXACT UTILITY TYPES AND LOCATIONS PRIOR TO PERFORMING THE WORK.

STATE OF TEXAS
TYLER G. MITCHELL
139240
LICENSED
PROFESSIONAL ENGINEER
1/29/2026

GEORGETOWN TEXAS
more than welcome

Kimley»Horn F-928

Texas Department of Transportation

SH 29

CONFLICT LAYOUT
BEGIN TO STA. 173+00

SHEET 1 OF 2

CONT	SECT	JOB	HIGHWAY
0337	01	053	SH 29
DIST	COUNTY		SHEET NO.
AUS	WILLIAMSON		19

DW: CK: DW: CK:

DATE: 1/29/2026 8:23:38 AM
FILE: pw://kh-pw.bentley.com:kh-pw-01/Documents/01 Active Projects/TX-GEO-069284005 - SH 29 Widening/4 - Design/Plan Set/2. TCP/CMP TCP Sheets/SH29_K_CMP_PLAY01.dgn

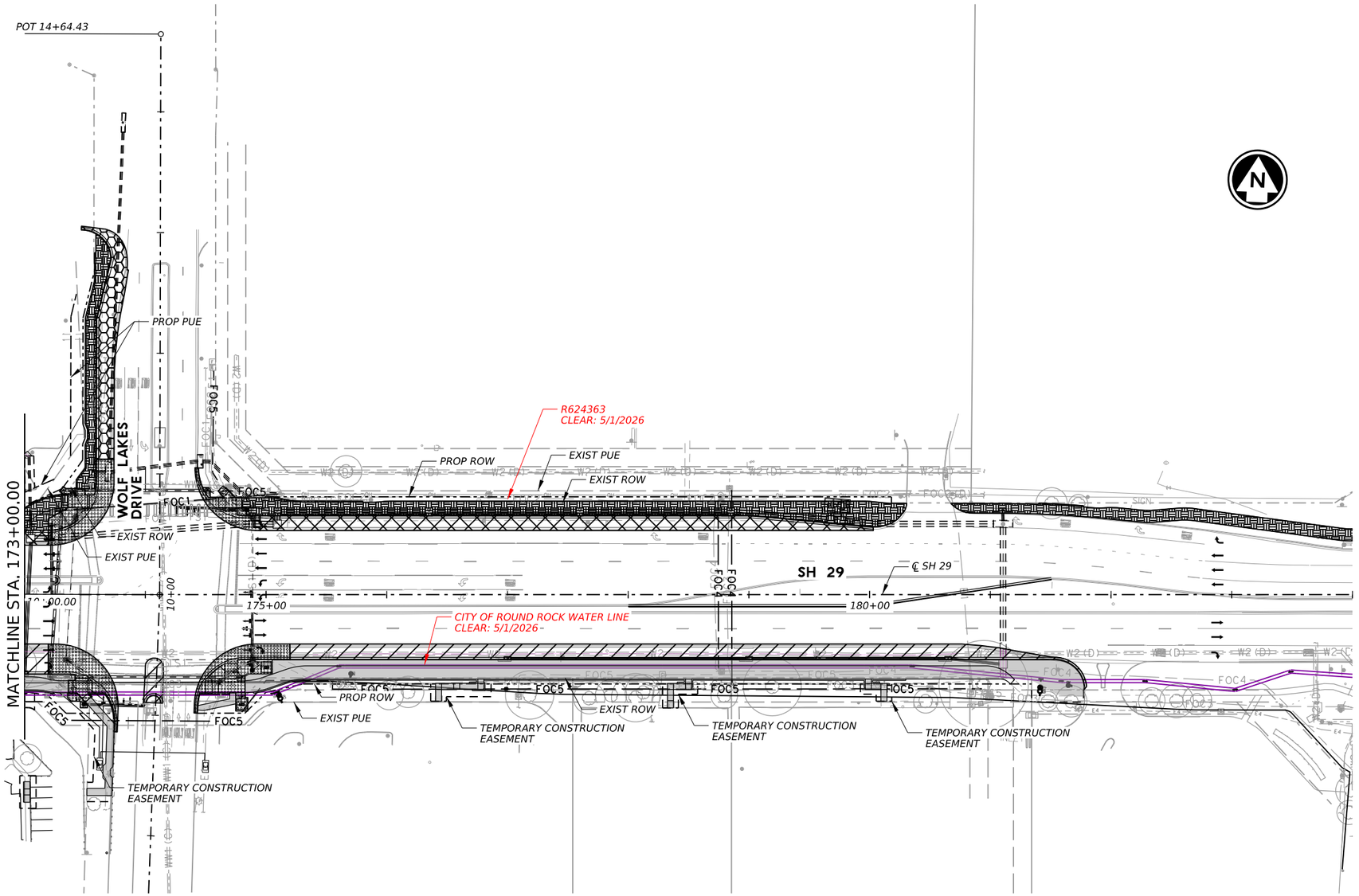

HORIZ. 0' 50' 100'

LEGEND

- PHASE 2
- PHASE 3
- PHASE 4
- PHASE 5
- PHASE 6
- PHASE 7

NOTES:

THE PURPOSE OF THESE PLANS IS TO PROVIDE AN OVERVIEW OF THE EXPECTED UTILITY ACCOMODATIONS ON THIS PROJECT. THESE PLANS SHOW, WHAT TXDOT BELIEVES TO BE, THE APPROXIMATE LOCATIONS AND ESTIMATED CLEAR DATES OF THE EXISTING UTILITITES, AND PROPOSED RELOCATIONS, OR ADJUSTMENTS. THESE PLANS ARE PROVIDED FOR INFORMATION PURPOSES ONLY AND SHOULD NOT BE SOLELY RELIED UPON WITHOUT FIELD VERIFICATION.

THE LOCATIONS OF EXISTING AND PROPOSED WATER MAINS, GAS MAINS, STORM SEWERS, SANITARY SEWERS, ELECTRIC, FIBER OPTICS LINES, AND OTHER UTILITIES AS SHOWN ON THESE PLANS ARE BASED ON THE BEST INFORMATION AVAILABLE TO TXDOT AND MAY NOT INCLUDE ALL UTILITIES ACTUALLY LOCATED WITHIN THE PROJECT. THE INFORMATION SHOWN CONCERNING TYPE AND LOCATION OF UTILITIES IS NOT GUARANTEED TO BE ACCURATE OR ALL INCLUSIVE. IT SHALL BE THE CONTRACTOR'S RESPONSIBILITY TO FIELD VERIFY ALL EXACT UTILITY TYPES AND LOCATIONS PRIOR TO PERFORMING THE WORK.

TYLER G. MITCHELL
139240
LICENSED PROFESSIONAL ENGINEER
STATE OF TEXAS
1/29/2026

GEORGETOWN TEXAS
more than welcome

Kimley»Horn
F-928

Texas Department of Transportation

SH 29

CONFLICT LAYOUT
STA. 173+00 TO STA. 184+00

SHEET 2 OF 2

CONT	SECT	JOB	HIGHWAY
0337	01	053	SH 29
DIST	COUNTY		SHEET NO.
AUS	WILLIAMSON		20

DATE: 1/29/2026 8:25:04 AM
FILE: pw://kh-pw.bentley.com:kh-pw-01/Documents/01 Active Projects/TX-GEO-069284005 - SH 29 Widening/4 - Design/Plan Set/2. TCP/CMP TCP Sheets/SH29_K_CMP_PLAY03.dgn

DW: CK: DW: CK:

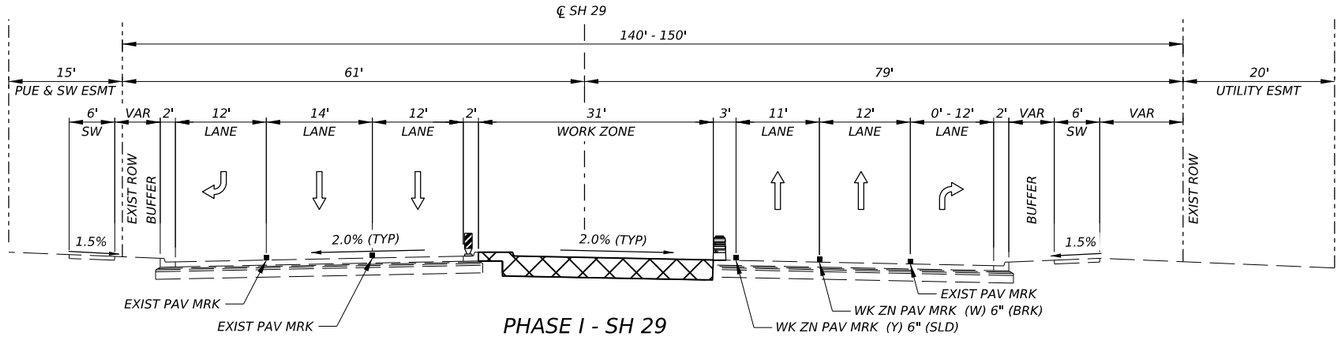

PHASE I - SH 29
℄ SH 29 BEGIN TO STA. 159+30.00

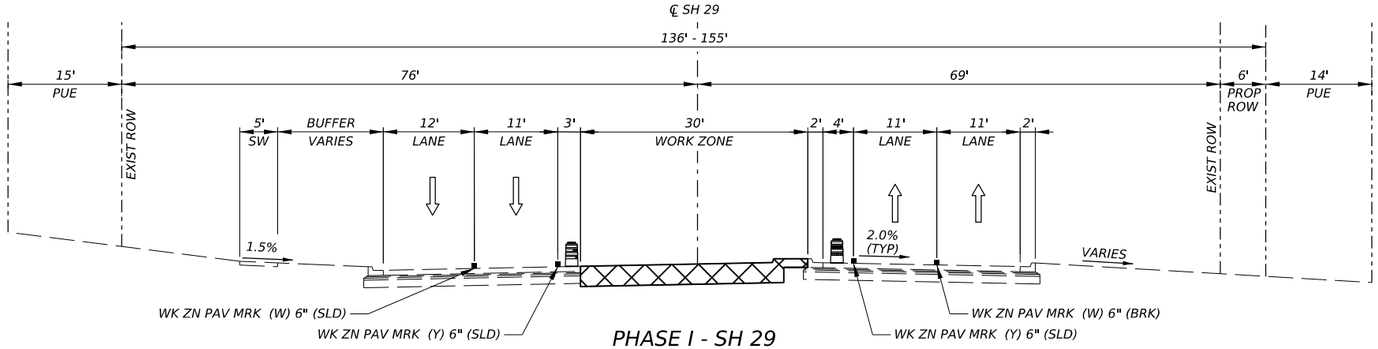

PHASE I - SH 29
℄ SH 29 STA. 160+44.00 TO STA. 167+04.00
℄ SH 29 STA. 174+55.00 TO STA. 185+40.00

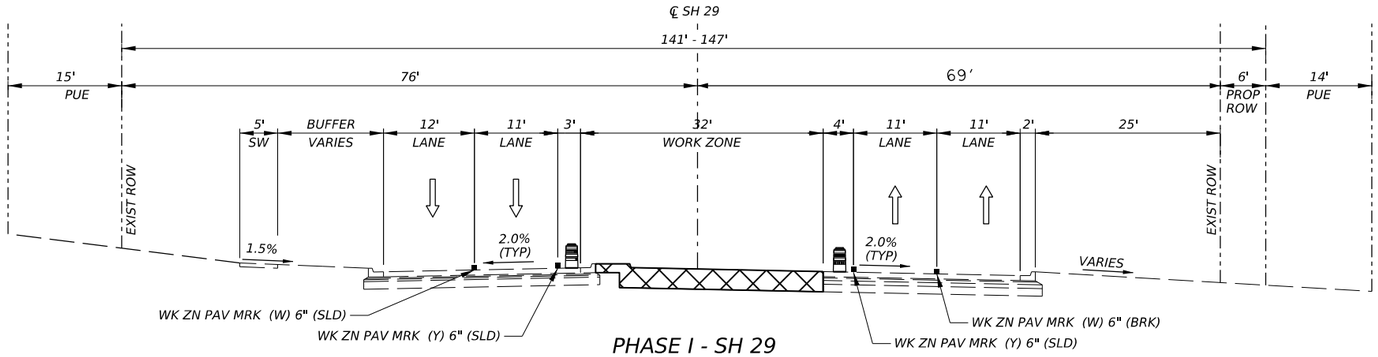

PHASE I - SH 29
℄ SH 29 STA. 167+04.00 TO STA. 173+66.00

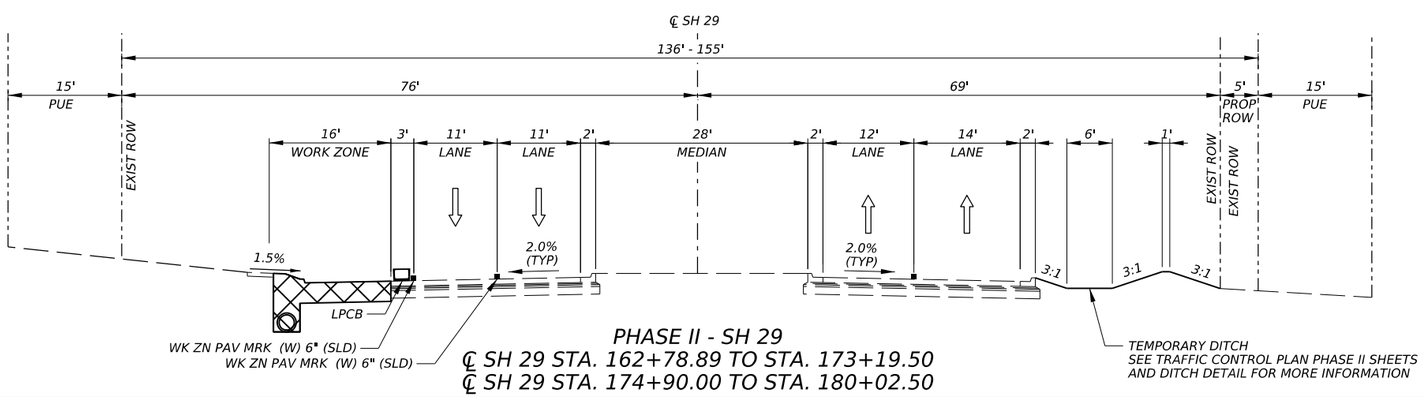

PHASE II - SH 29
℄ SH 29 STA. 162+78.89 TO STA. 173+19.50
℄ SH 29 STA. 174+90.00 TO STA. 180+02.50

LEGEND

	CONSTRUCTION THIS PHASE
	CONSTRUCTION PREVIOUS PHASE
	LOW PROFILE CONCRETE BARRIER
	VERTICAL PANEL CHANNELIZING DEVICE
	BARREL CHANNELIZING DEVICE

12/18/2025

STATE OF TEXAS
TYLER G. MITCHELL
139240
LICENSED
PROFESSIONAL ENGINEER

GEORGETOWN TEXAS
more than welcome

Kimley»Horn
F-928

Texas Department of Transportation

SH 29

TRAFFIC CONTROL PLAN TYPICAL SECTIONS

SHEET 1 OF 3

CONT	SECT	JOB	HIGHWAY
0337	01	053	SH 29
DIST		COUNTY	SHEET NO.
AUS		WILLIAMSON	21

DATE: 12/18/2025 1:39:32 PM
FILE: pw:\\kimley-horn.com:kh-pw-01/Documents/01 Active Projects/TX-GEO-069284005 - SH 29 Widening/4 - Design/Plan Set/2. TCP/SH29_K_TCP_TYP01.dgn

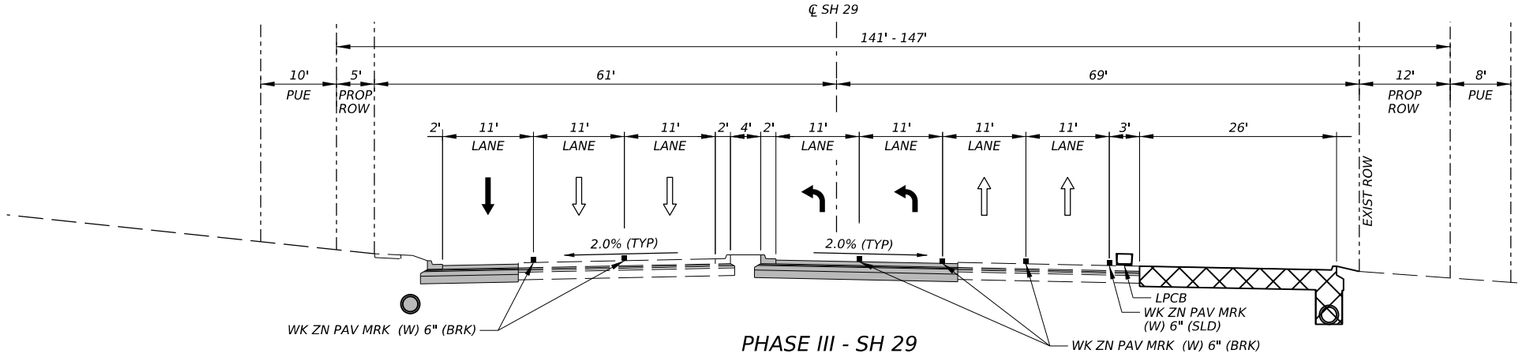

PHASE III - SH 29
℄ SH 29 STA. 160+79.00 TO STA. 174+19.50

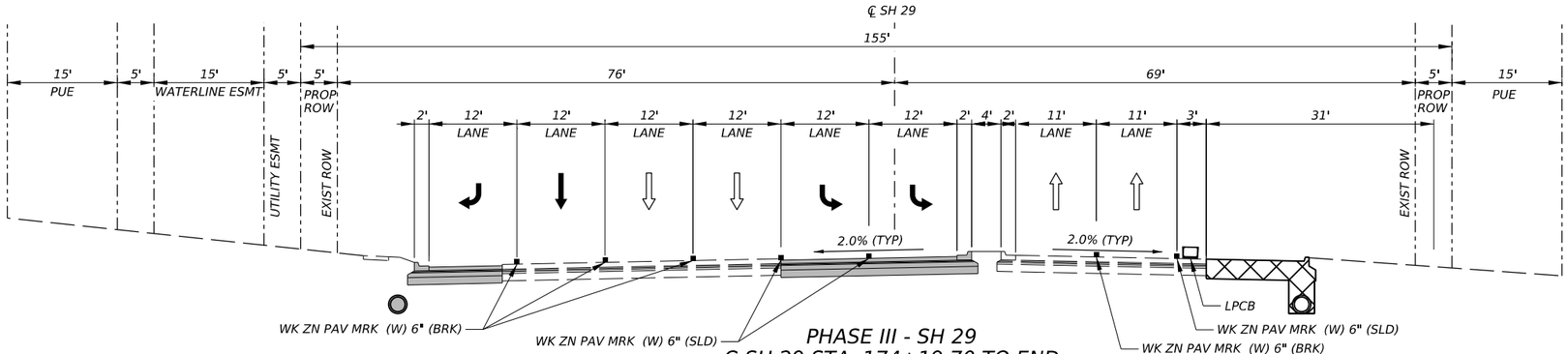

PHASE III - SH 29
℄ SH 29 STA. 174+19.70 TO END

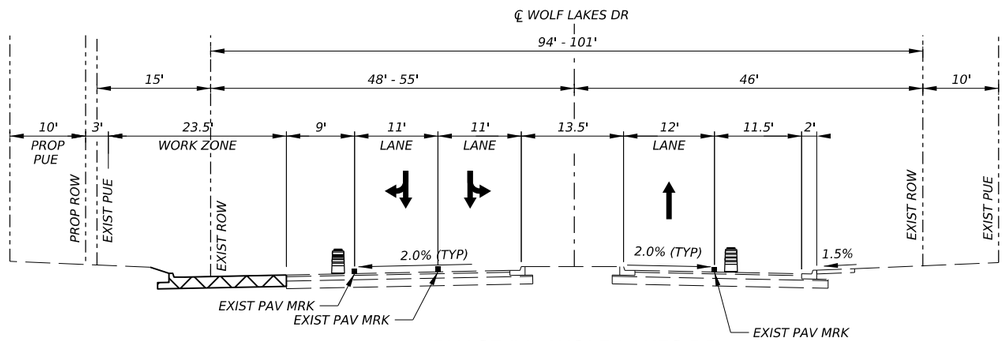

PHASE IV - WOLF LAKES DR
℄ WOLF LAKES DR STA. 8+85.00 TO STA. 11+12.00
PHASE V - WOLF LAKES DR
℄ WOLF LAKES DR STA. 11+12.00 TO STA. 13+05.00

LEGEND

	CONSTRUCTION THIS PHASE
	CONSTRUCTION PREVIOUS PHASE
	LOW PROFILE CONCRETE BARRIER
	VERTICAL PANEL CHANNELIZING DEVICE
	BARREL CHANNELIZING DEVICE

12/18/2025

STATE OF TEXAS
TYLER G. MITCHELL
139240
LICENSED
PROFESSIONAL ENGINEER

GEORGETOWN TEXAS
more than welcome

Kimley»Horn F-928

Texas Department of Transportation

SH 29

TRAFFIC CONTROL PLAN TYPICAL SECTIONS

SHEET 2 OF 3

CONT	SECT	JOB	HIGHWAY
0337	01	053	SH 29
DIST		COUNTY	SHEET NO.
AUS		WILLIAMSON	22

DATE: 12/18/2025 1:39:51 PM
FILE: pw:\\kh-pw-01.bentley.com:kh-pw-01/Documents/01 Active Projects/TX-GEO-069284005 - SH 29 Widening/4 - Design/Plan Set/2. TCP/SH29_K_TCP_TYP02.dgn

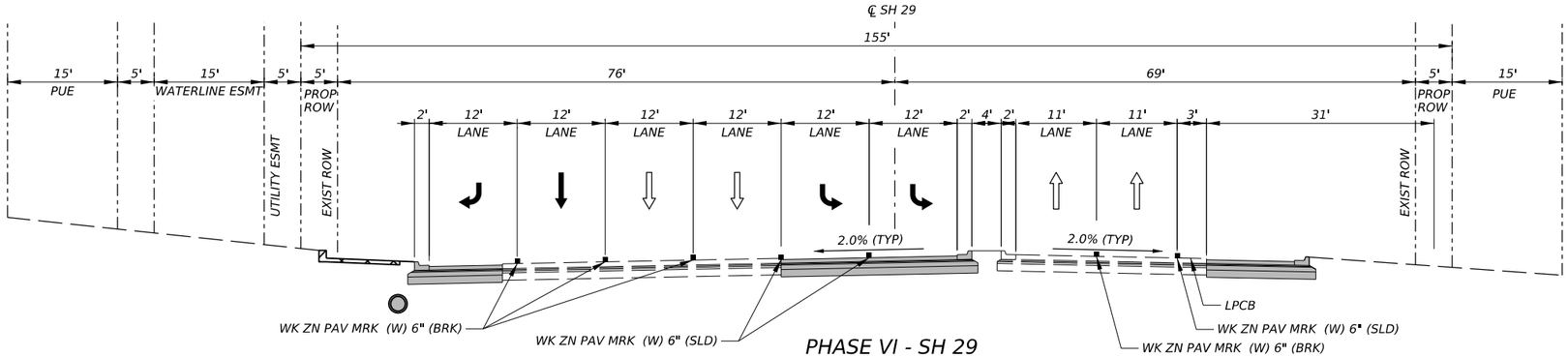

PHASE VI - SH 29
℄ SH 29 STA. 160+73.00 TO STA. 173+36.00
℄ SH 29 STA. 174+79.00 TO STA. 185+19.00

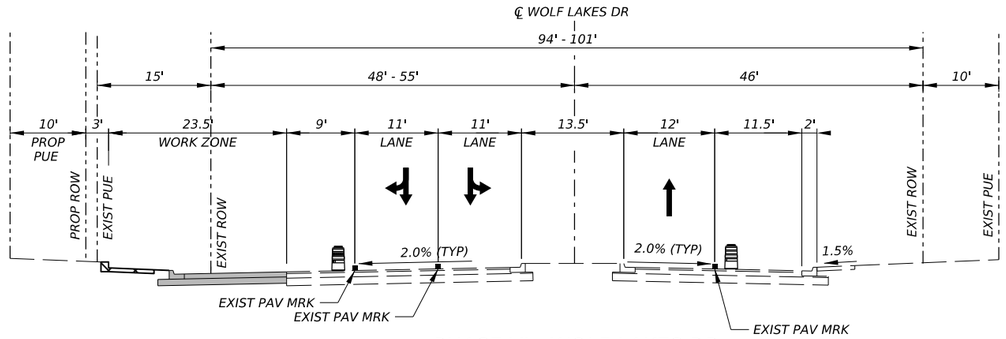

PHASE VI - WOLF LAKES DR
℄ WOLF LAKES DR STA. 10+87.77 TO STA. 12+98.82

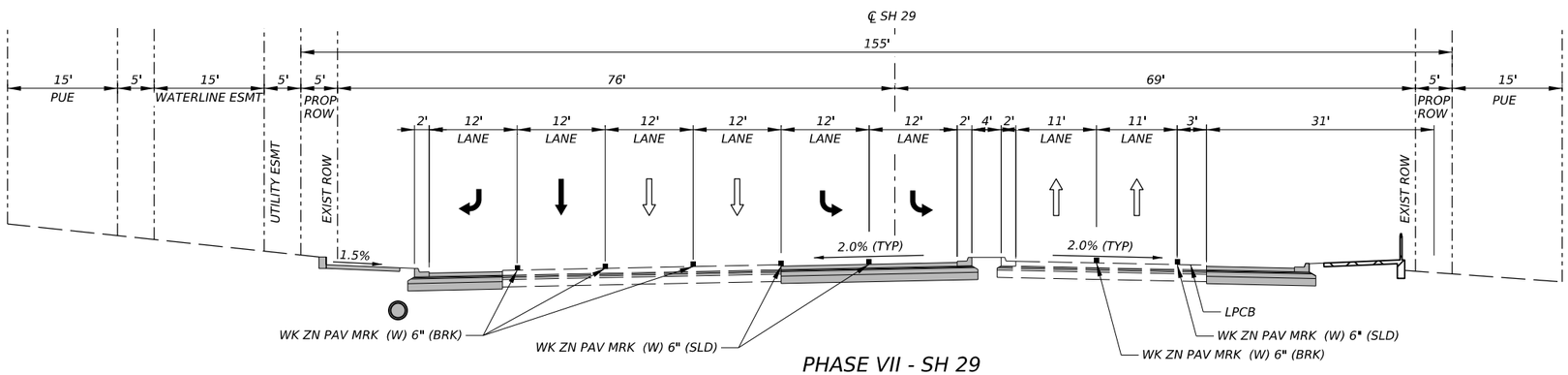

PHASE VII - SH 29
℄ SH 29 STA. 160+68.00 TO STA. 181+77.00

LEGEND

	CONSTRUCTION THIS PHASE
	CONSTRUCTION PREVIOUS PHASE
	LOW PROFILE CONCRETE BARRIER
	VERTICAL PANEL CHANNELIZING DEVICE
	BARREL CHANNELIZING DEVICE

12/18/2025

STATE OF TEXAS
TYLER G. MITCHELL
139240
LICENSED
PROFESSIONAL ENGINEER

GEORGETOWN TEXAS
more than welcome

Kimley»Horn F-928

Texas Department of Transportation

SH 29

TRAFFIC CONTROL PLAN
TYPICAL SECTIONS

SHEET 3 OF 3

CONT	SECT	JOB	HIGHWAY
0337	01	053	SH 29
DIST		COUNTY	SHEET NO.
AUS		WILLIAMSON	23

DATE: 12/18/2025 1:40:14 PM
FILE: pw:\\kimley-horn.com:kh-pw-01/Documents/01 Active Projects/TX-GEO-069284005 - SH 29 Widening/4 - Design/Plan Set/2. TCP/SH29_K_TCP_TYP03.dgn

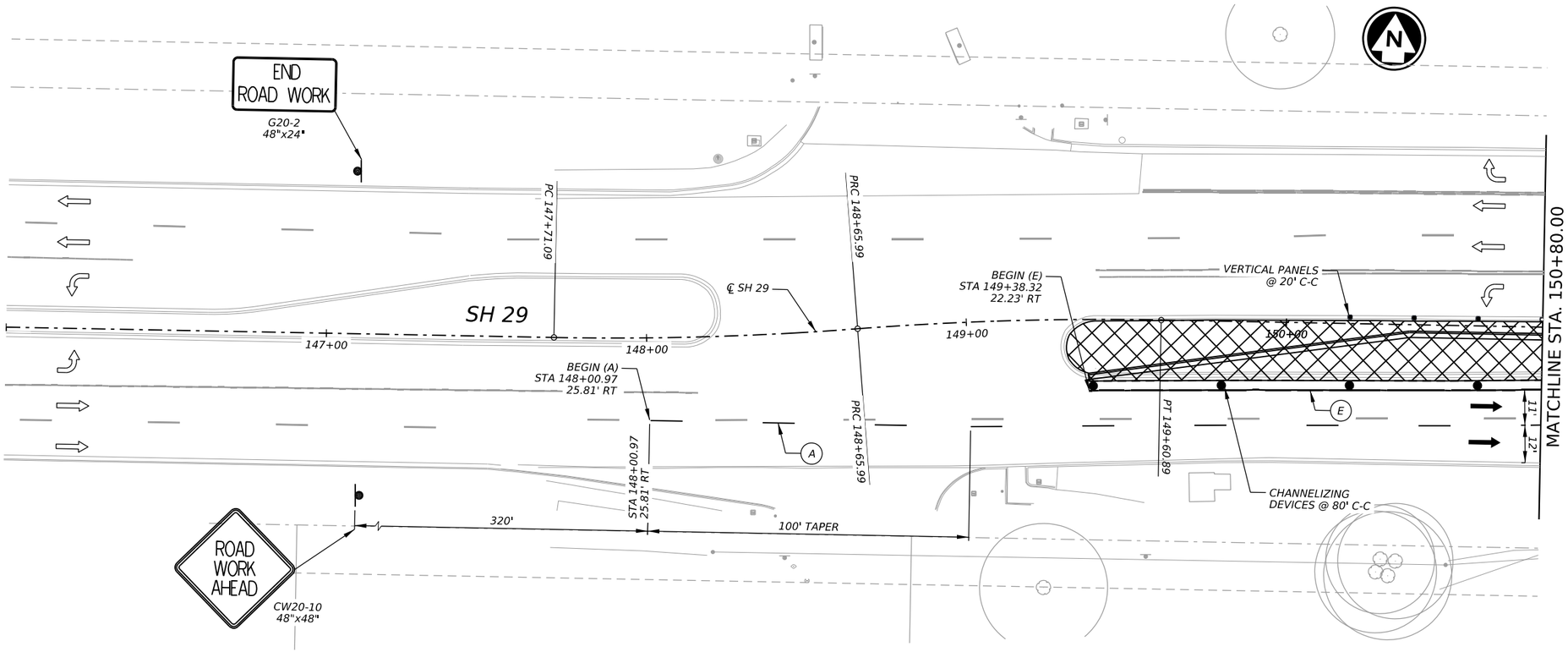

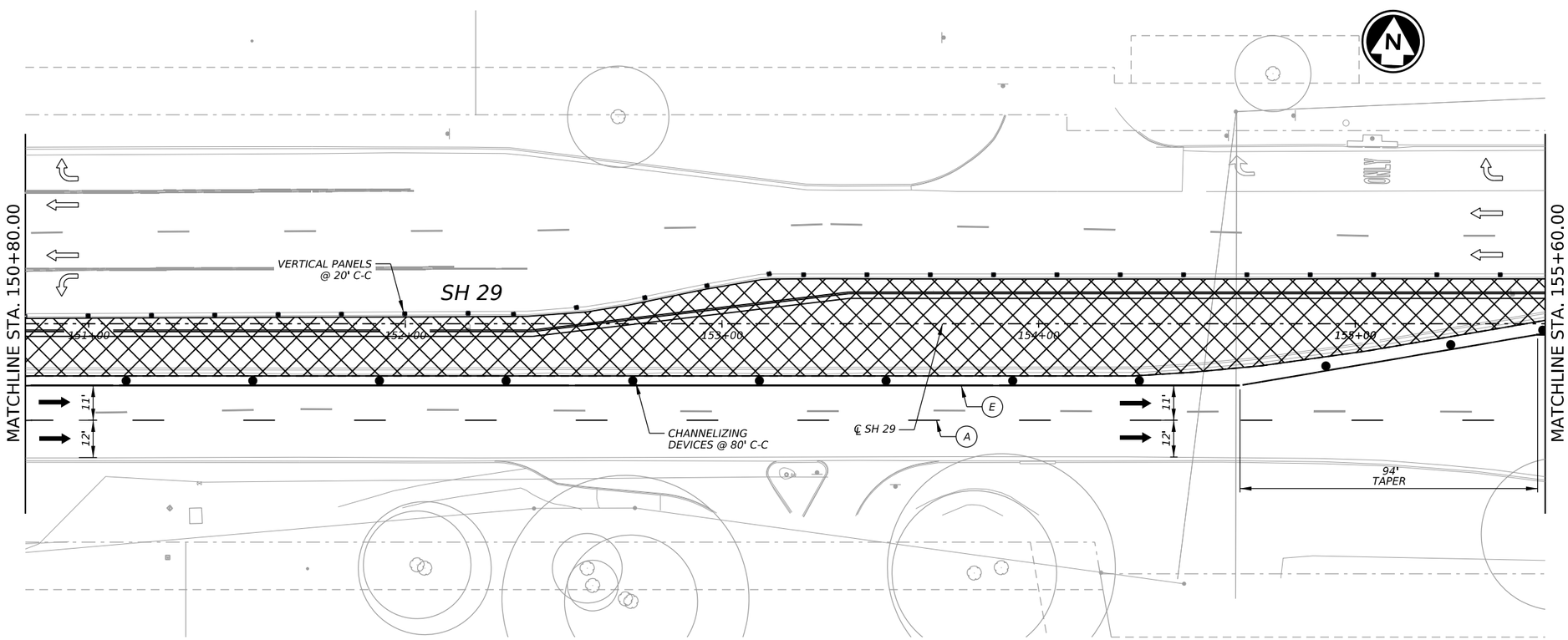

LEGEND

●	CHANNELIZING DEVICES
→	TRAFFIC FLOW INSIDE WORK ZONE
◎	WORK ZONE SIGN POST
	CONSTRUCTION THIS PHASE
	BORED LOCATION
	CONSTRUCTION PREVIOUS PHASE
A	WK ZN PAV MRK REMOVABLE (W) 6" (BRK)
B	WK ZN PAV MRK REMOVABLE (W) 6" (SLD)
C	WK ZN PAV MRK NON-REMOVABLE (W) 6" (BRK)
D	WK ZN PAV MRK NON-REMOVABLE (W) 6" (SLD)
E	WK ZN PAV MRK REMOVABLE (Y) 6" (SLD)
F	WK ZN PAV MRK NON-REMOVABLE (Y) 6" (SLD)
G	WK ZN PAV MRK REMOVABLE (W) 6" (DOT)
H	WK ZN PAV MRK NON-REMOVABLE (W) 24" (SLD)
I	WK ZN PAV MRK REMOVABLE (W) 24" (SLD)

NOTES:
1. CONTRACTOR TO PHASE CONSTRUCT AND UTILIZE EXISTING RAMPS TO MAINTAIN PEDESTRIAN CROSSING. SEE TCP NARRATIVE FOR ADDITIONAL INFORMATION.
2. CONTRACTOR TO PROVIDE BUSINESS ACCESS SIGNS DURING CONSTRUCTION.

HORIZ. 0' 20' 40'

12/18/2025

STATE OF TEXAS
TYLER G. MITCHELL
139240
LICENSED
PROFESSIONAL ENGINEER

GEORGETOWN TEXAS
more than welcome

Kimley»Horn F-928

Texas Department of Transportation

SH 29

TRAFFIC CONTROL PLAN PHASE I

SHEET 1 OF 5

CONT	SECT	JOB	HIGHWAY
0337	01	053	SH 29
DIST		COUNTY	SHEET NO.
AUS		WILLIAMSON	24

DATE: 12/18/2025 1:40:37 PM
FILE: pw:\\KHDENVER.com:kh-pw-01/Documents/01 Active Projects/TX-GEO-069284005 - SH 29 Widening/4 - Design/Plan Set/2. TCP/SH29_K_TCP_PH1_01.dgn

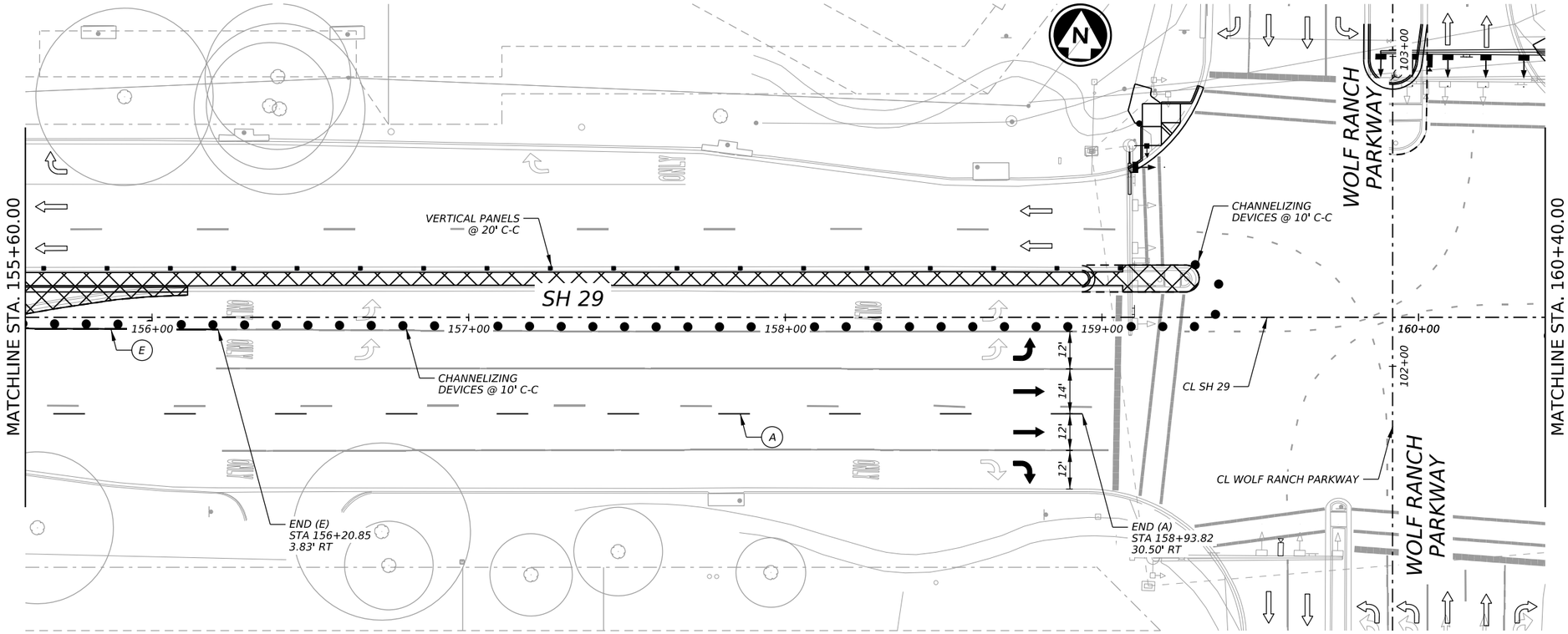

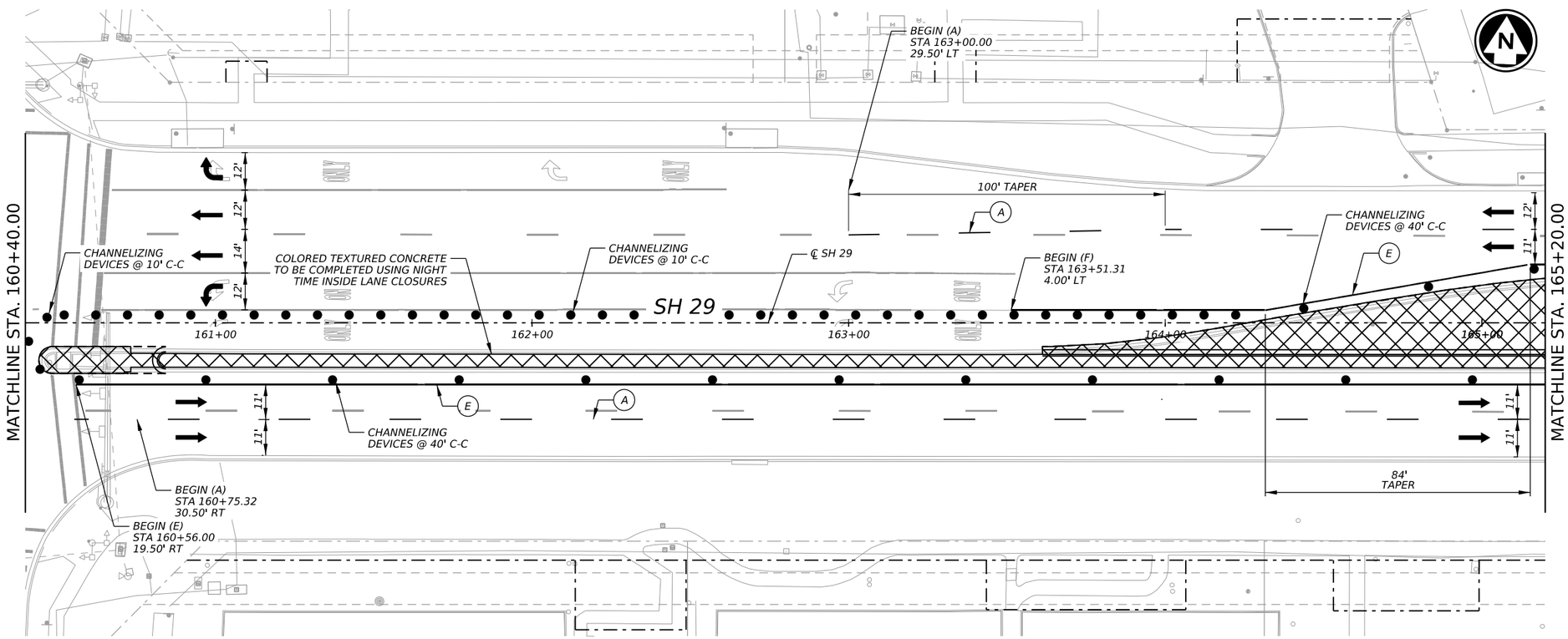

LEGEND

●	CHANNELIZING DEVICES
→	TRAFFIC FLOW INSIDE WORK ZONE
◎	WORK ZONE SIGN POST
	CONSTRUCTION THIS PHASE
	BORED LOCATION
	CONSTRUCTION PREVIOUS PHASE
A	WK ZN PAV MRK REMOVABLE (W) 6" (BRK)
B	WK ZN PAV MRK REMOVABLE (W) 6" (SLD)
C	WK ZN PAV MRK NON-REMOVABLE (W) 6" (BRK)
D	WK ZN PAV MRK NON-REMOVABLE (W) 6" (SLD)
E	WK ZN PAV MRK REMOVABLE (Y) 6" (SLD)
F	WK ZN PAV MRK NON-REMOVABLE (Y) 6" (SLD)
G	WK ZN PAV MRK REMOVABLE (W) 6" (DOT)
H	WK ZN PAV MRK NON-REMOVABLE (W) 24" (SLD)
I	WK ZN PAV MRK REMOVABLE (W) 24" (SLD)

NOTES:
1. CONTRACTOR TO PHASE CONSTRUCT AND UTILIZE EXISTING RAMPS TO MAINTAIN PEDESTRIAN CROSSING. SEE TCP NARRATIVE FOR ADDITIONAL INFORMATION.
2. CONTRACTOR TO PROVIDE BUSINESS ACCESS SIGNS DURING CONSTRUCTION.

HORIZ. 0' 20' 40'

12/18/2025

STATE OF TEXAS
TYLER G. MITCHELL
139240
LICENSED
PROFESSIONAL ENGINEER

GEORGETOWN TEXAS
more than welcome

Kimley»Horn F-928

Texas Department of Transportation

SH 29

TRAFFIC CONTROL PLAN PHASE I

SHEET 2 OF 5

CONT	SECT	JOB	HIGHWAY
0337	01	053	SH 29
DIST		COUNTY	SHEET NO.
AUS		WILLIAMSON	25

DATE: 12/18/2025 1:41:02 PM
FILE: pw:\\kh-pw-01\Documents\01 Active Projects\TX-GEO-069284005 - SH 29 Widening\4 - Design\Plan Set\2. TCP\SH29_K_TCP_PH1_03.dgn

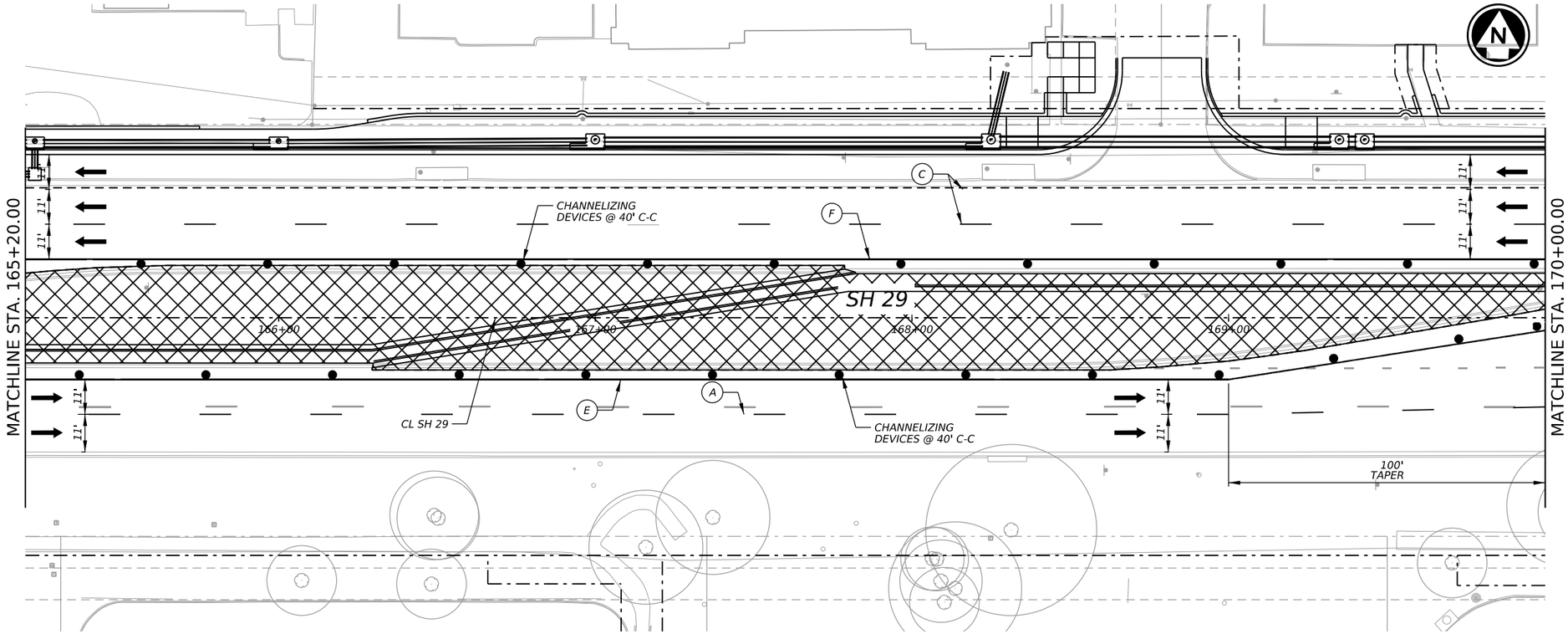

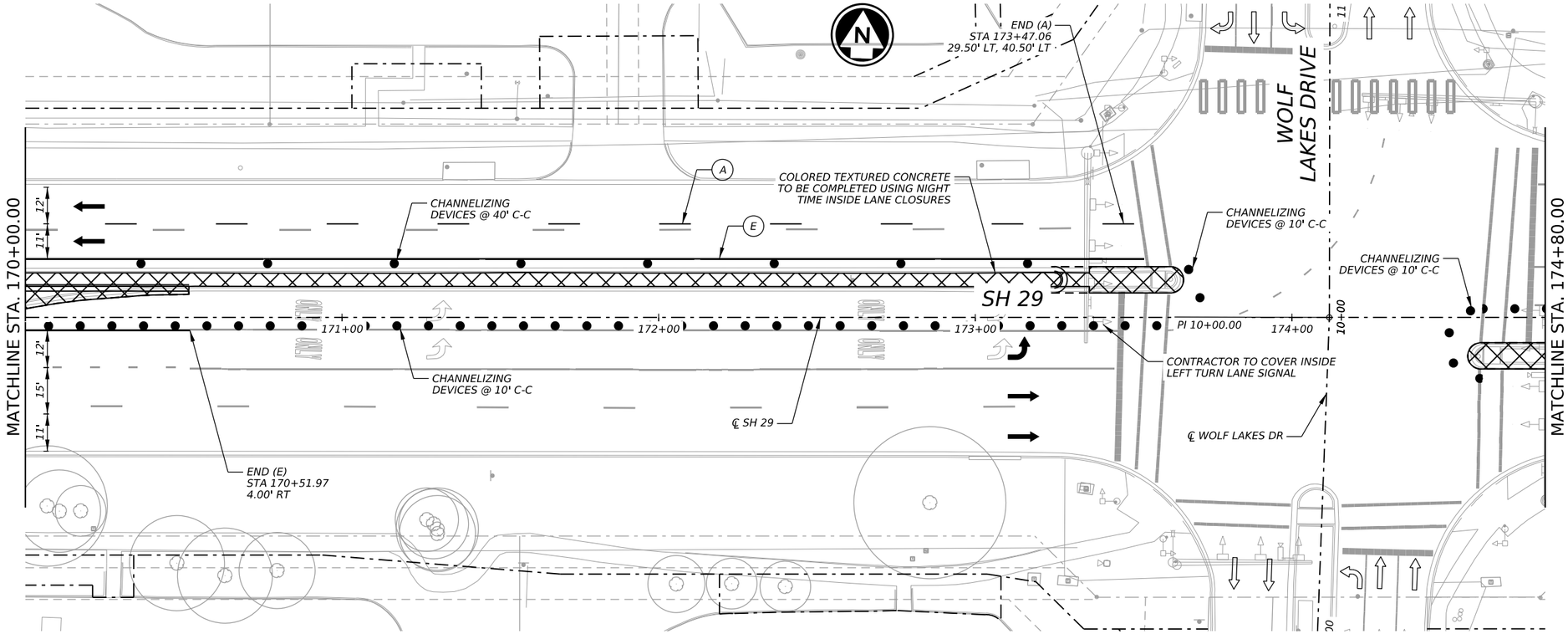

LEGEND

●	CHANNELIZING DEVICES
→	TRAFFIC FLOW INSIDE WORK ZONE
◎	WORK ZONE SIGN POST
	CONSTRUCTION THIS PHASE
	BORED LOCATION
	CONSTRUCTION PREVIOUS PHASE
A	WK ZN PAV MRK REMOVABLE (W) 6" (BRK)
B	WK ZN PAV MRK REMOVABLE (W) 6" (SLD)
C	WK ZN PAV MRK NON-REMOVABLE (W) 6" (BRK)
D	WK ZN PAV MRK NON-REMOVABLE (W) 6" (SLD)
E	WK ZN PAV MRK REMOVABLE (Y) 6" (SLD)
F	WK ZN PAV MRK NON-REMOVABLE (Y) 6" (SLD)
G	WK ZN PAV MRK REMOVABLE (W) 6" (DOT)
H	WK ZN PAV MRK NON-REMOVABLE (W) 24" (SLD)
I	WK ZN PAV MRK REMOVABLE (W) 24" (SLD)

NOTES:
1. CONTRACTOR TO PHASE CONSTRUCT AND UTILIZE EXISTING RAMPS TO MAINTAIN PEDESTRIAN CROSSING. SEE TCP NARRATIVE FOR ADDITIONAL INFORMATION.
2. CONTRACTOR TO PROVIDE BUSINESS ACCESS SIGNS DURING CONSTRUCTION.

HORIZ. 0' 20' 40'

12/18/2025

STATE OF TEXAS
TYLER G. MITCHELL
139240
LICENSED PROFESSIONAL ENGINEER

GEORGETOWN TEXAS
more than welcome

Kimley»Horn F-928

Texas Department of Transportation

SH 29

TRAFFIC CONTROL PLAN PHASE I

SHEET 3 OF 5

CONT	SECT	JOB	HIGHWAY
0337	01	053	SH 29
DIST		COUNTY	SHEET NO.
AUS		WILLIAMSON	26

DATE: 12/18/2025 1:41:23 PM
FILE: pw:\\kh-pw-01.bentley.com:kh-pw-01/Documents/01 Active Projects/TX-GEO-069284005 - SH 29 Widening/4 - Design/Plan Set/2. TCP/SH29_K_TCP_PH1_05.dgn

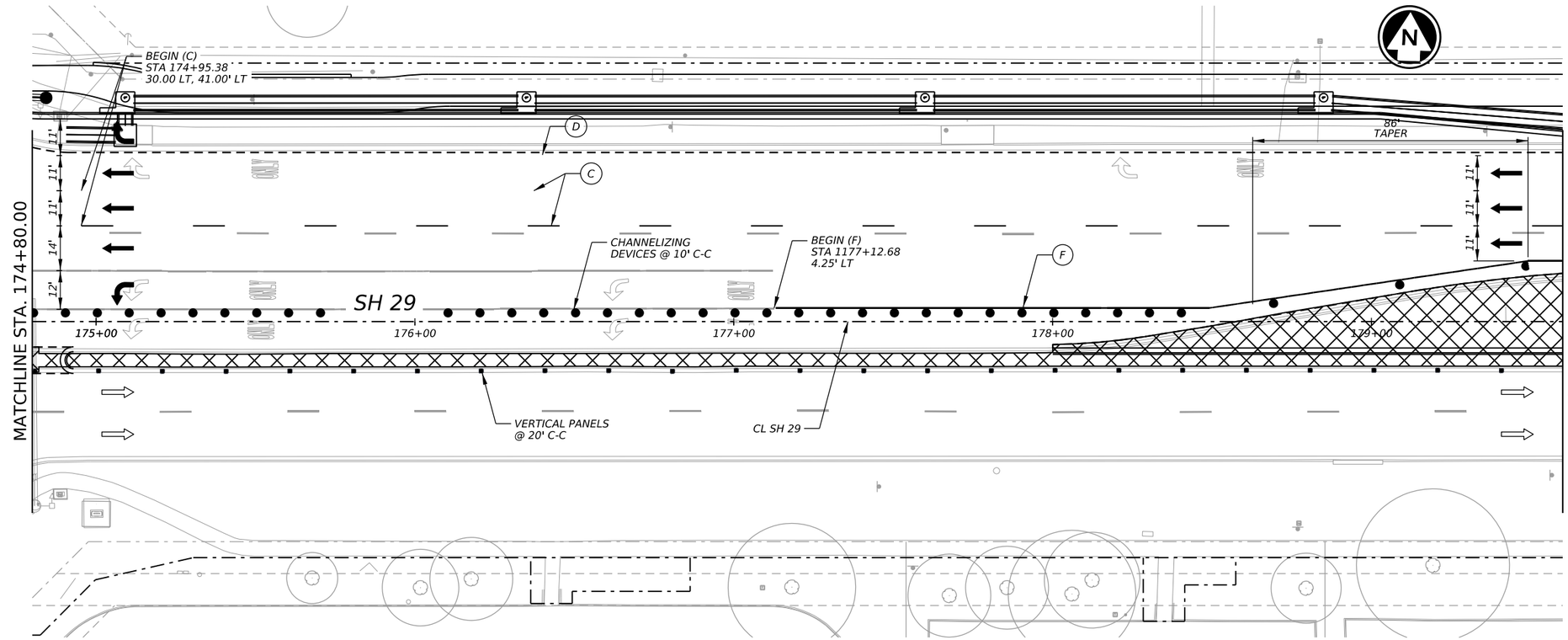

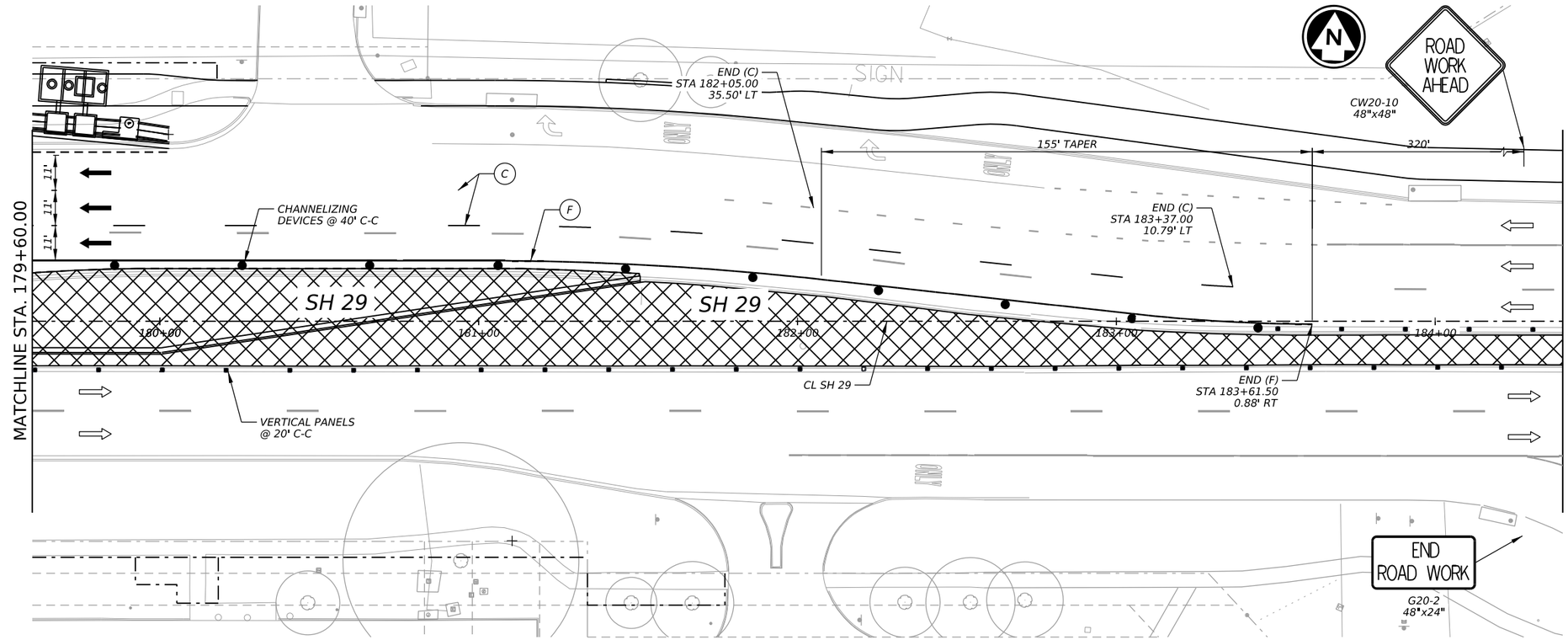

LEGEND

●	CHANNELIZING DEVICES
→	TRAFFIC FLOW INSIDE WORK ZONE
◎	WORK ZONE SIGN POST
	CONSTRUCTION THIS PHASE
	BORED LOCATION
	CONSTRUCTION PREVIOUS PHASE
A	WK ZN PAV MRK REMOVABLE (W) 6" (BRK)
B	WK ZN PAV MRK REMOVABLE (W) 6" (SLD)
C	WK ZN PAV MRK NON-REMOVABLE (W) 6" (BRK)
D	WK ZN PAV MRK NON-REMOVABLE (W) 6" (SLD)
E	WK ZN PAV MRK REMOVABLE (Y) 6" (SLD)
F	WK ZN PAV MRK NON-REMOVABLE (Y) 6" (SLD)
G	WK ZN PAV MRK REMOVABLE (W) 6" (DOT)
H	WK ZN PAV MRK NON-REMOVABLE (W) 24" (SLD)
I	WK ZN PAV MRK REMOVABLE (W) 24" (SLD)

NOTES:
1. CONTRACTOR TO PHASE CONSTRUCT AND UTILIZE EXISTING RAMPS TO MAINTAIN PEDESTRIAN CROSSING. SEE TCP NARRATIVE FOR ADDITIONAL INFORMATION.
2. CONTRACTOR TO PROVIDE BUSINESS ACCESS SIGNS DURING CONSTRUCTION.

HORIZ. 0' 20' 40'

12/18/2025

STATE OF TEXAS
TYLER G. MITCHELL
139240
LICENSED
PROFESSIONAL ENGINEER

GEORGETOWN
TEXAS
more than welcome

Kimley»Horn
F-928

Texas Department of Transportation

SH 29

TRAFFIC CONTROL
PLAN
PHASE I

SHEET 4 OF 5

CONT	SECT	JOB	HIGHWAY
0337	01	053	SH 29
DIST		COUNTY	SHEET NO.
AUS		WILLIAMSON	27

DATE: 1/18/2025 1:41:42 PM
FILE: pw:\\kimley-horn.com:kh-pw-01/Documents/01 Active Projects/TX-GEO-069284005 - SH 29 Widening/4 - Design/Plan Set/2. TCP/SH29_K_TCP_PH1_07.dgn

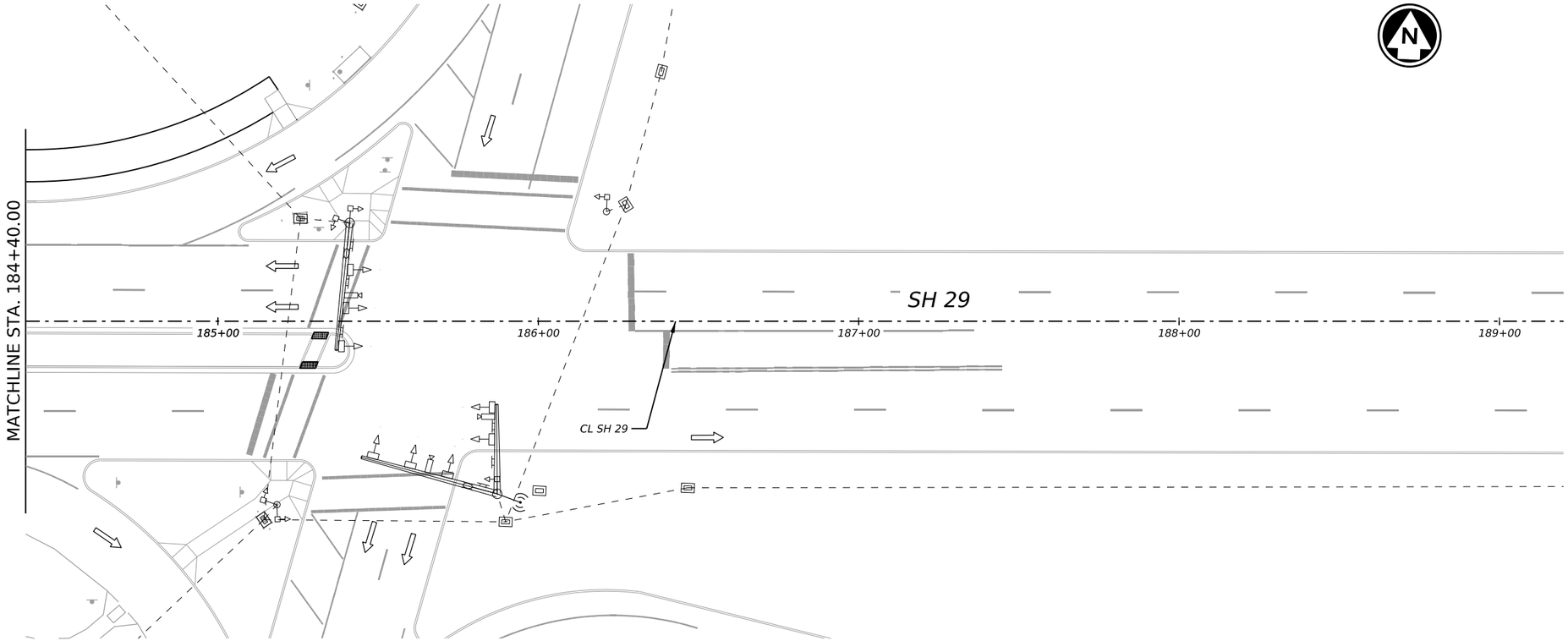

LEGEND

●	CHANNELIZING DEVICES
→	TRAFFIC FLOW INSIDE WORK ZONE
	WORK ZONE SIGN POST
	CONSTRUCTION THIS PHASE
	BORED LOCATION
	CONSTRUCTION PREVIOUS PHASE
Ⓐ	WK ZN PAV MRK REMOVABLE (W) 6" (BRK)
Ⓑ	WK ZN PAV MRK REMOVABLE (W) 6" (SLD)
Ⓒ	WK ZN PAV MRK NON-REMOVABLE (W) 6" (BRK)
Ⓓ	WK ZN PAV MRK NON-REMOVABLE (W) 6" (SLD)
Ⓔ	WK ZN PAV MRK REMOVABLE (Y) 6" (SLD)
Ⓕ	WK ZN PAV MRK NON-REMOVABLE (Y) 6" (SLD)
Ⓖ	WK ZN PAV MRK REMOVABLE (W) 6" (DOT)
Ⓗ	WK ZN PAV MRK NON-REMOVABLE (W) 24" (SLD)
Ⓘ	WK ZN PAV MRK REMOVABLE (W) 24" (SLD)

NOTES:
1. CONTRACTOR TO PHASE CONSTRUCT AND UTILIZE EXISTING RAMPS TO MAINTAIN PEDESTRIAN CROSSING. SEE TCP NARRATIVE FOR ADDITIONAL INFORMATION.
2. CONTRACTOR TO PROVIDE BUSINESS ACCESS SIGNS DURING CONSTRUCTION.

HORIZ. 0' 20' 40'

TYLER G. MITCHELL
139240
LICENSED
PROFESSIONAL ENGINEER
STATE OF TEXAS
12/18/2025

GEORGETOWN TEXAS
more than welcome

Kimley»Horn F-928

Texas Department of Transportation

SH 29

TRAFFIC CONTROL PLAN PHASE I

SHEET 5 OF 5

CONT	SECT	JOB	HIGHWAY
0337	01	053	SH 29
DIST	COUNTY		SHEET NO.
AUS	WILLIAMSON		28

DATE: 12/18/2025 1:42:01 PM
FILE: p:\0337\01\053\Design\Plan Set\2. TCP\SH29_K_TCP_PH1_09.dgn

DW: CK: DW: CK:

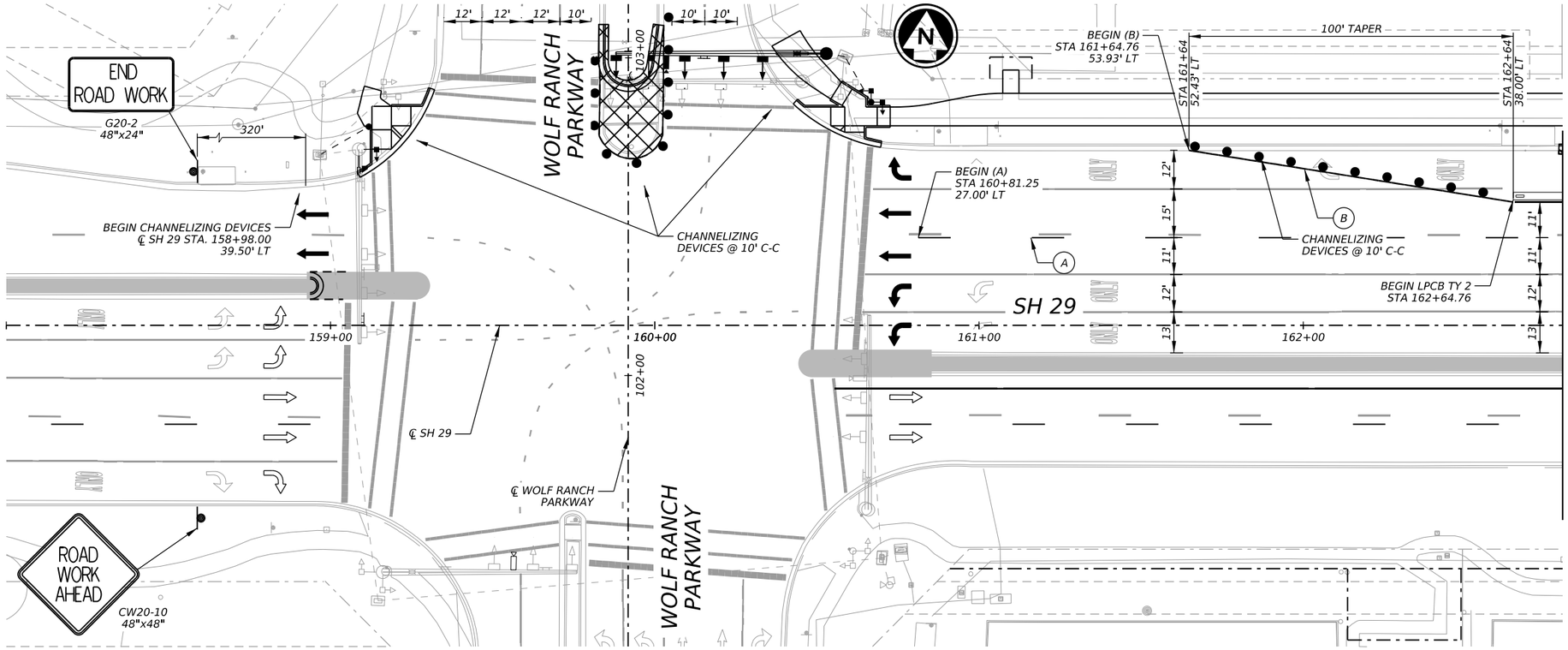

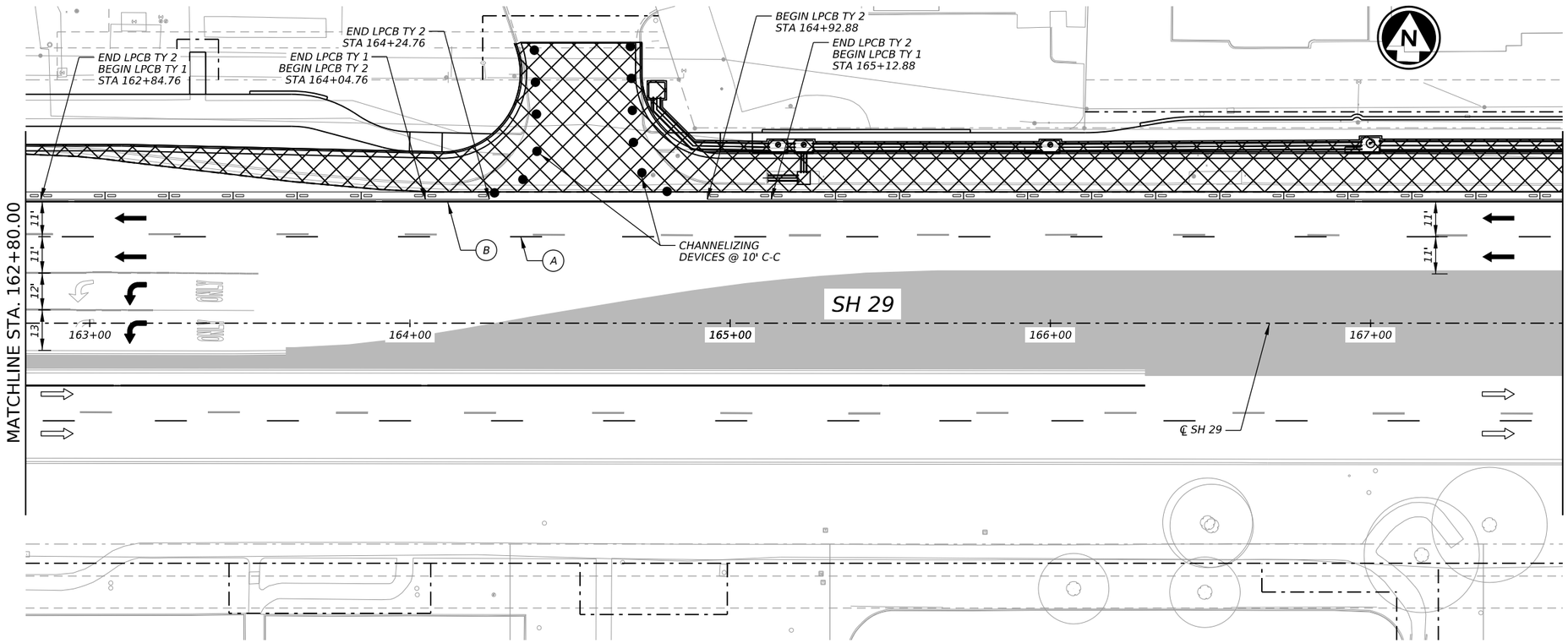

LEGEND

●	CHANNELIZING DEVICES
→	TRAFFIC FLOW INSIDE WORK ZONE
◎	WORK ZONE SIGN POST
▨	CONSTRUCTION THIS PHASE
▨	BORED LOCATION
▨	CONSTRUCTION PREVIOUS PHASE
Ⓐ	WK ZN PAV MRK REMOVABLE (W) 6" (BRK)
Ⓑ	WK ZN PAV MRK REMOVABLE (W) 6" (SLD)
Ⓒ	WK ZN PAV MRK NON-REMOVABLE (W) 6" (BRK)
Ⓓ	WK ZN PAV MRK NON-REMOVABLE (W) 6" (SLD)
Ⓔ	WK ZN PAV MRK REMOVABLE (Y) 6" (SLD)
Ⓕ	WK ZN PAV MRK NON-REMOVABLE (Y) 6" (SLD)
Ⓖ	WK ZN PAV MRK REMOVABLE (W) 6" (DOT)
Ⓗ	WK ZN PAV MRK NON-REMOVABLE (W) 24" (SLD)
Ⓘ	WK ZN PAV MRK REMOVABLE (W) 24" (SLD)

NOTES:
1. CONTRACTOR TO PHASE CONSTRUCT AND UTILIZE EXISTING RAMPS TO MAINTAIN PEDESTRIAN CROSSING. SEE TCP NARRATIVE FOR ADDITIONAL INFORMATION.
2. CONTRACTOR TO PROVIDE BUSINESS ACCESS SIGNS DURING CONSTRUCTION.

HORIZ. 0' 20' 40'

12/18/2025

TYLER G. MITCHELL
139240
LICENSED
PROFESSIONAL ENGINEER
STATE OF TEXAS

GEORGETOWN TEXAS
more than welcome

Kimley»Horn F-928

Texas Department of Transportation

SH 29

TRAFFIC CONTROL PLAN PHASE II

SHEET 1 OF 3

CONT	SECT	JOB	HIGHWAY
0337	01	053	SH 29
DIST	COUNTY		SHEET NO.
AUS	WILLIAMSON		29

DATE: 12/18/2025 1:42:21 PM
FILE: pw://kh-pw.bentley.com:kh-pw-01/Documents/01 Active Projects/TX-GEO-069284005 - SH 29 Widening/4 - Design/Plan Set/2. TCP/SH29_K_TCP_PH2_01.dgn

CK DW CK DW

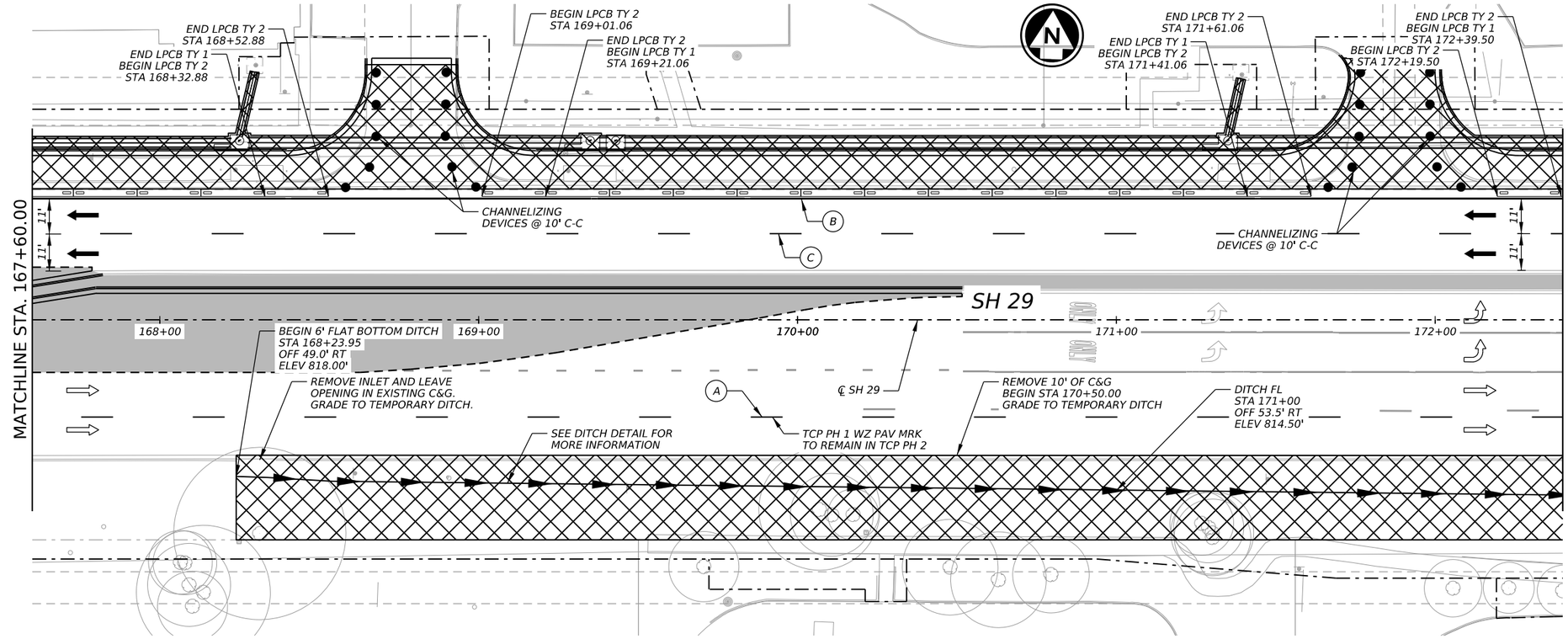

LEGEND

●	CHANNELIZING DEVICES
→	TRAFFIC FLOW INSIDE WORK ZONE
◎	WORK ZONE SIGN POST
	CONSTRUCTION THIS PHASE
	BORED LOCATION
	CONSTRUCTION PREVIOUS PHASE
A	WK ZN PAV MRK REMOVABLE (W) 6" (BRK)
B	WK ZN PAV MRK REMOVABLE (W) 6" (SLD)
C	WK ZN PAV MRK NON-REMOVABLE (W) 6" (BRK)
D	WK ZN PAV MRK NON-REMOVABLE (W) 6" (SLD)
E	WK ZN PAV MRK REMOVABLE (Y) 6" (SLD)
F	WK ZN PAV MRK NON-REMOVABLE (Y) 6" (SLD)
G	WK ZN PAV MRK REMOVABLE (W) 6" (DOT)
H	WK ZN PAV MRK NON-REMOVABLE (W) 24" (SLD)
I	WK ZN PAV MRK REMOVABLE (W) 24" (SLD)

NOTES:
1. CONTRACTOR TO PHASE CONSTRUCT AND UTILIZE EXISTING RAMPS TO MAINTAIN PEDESTRIAN CROSSING. SEE TCP NARRATIVE FOR ADDITIONAL INFORMATION.
2. CONTRACTOR TO PROVIDE BUSINESS ACCESS SIGNS DURING CONSTRUCTION.

HORIZ. 0' 20' 40'

12/18/2025

STATE OF TEXAS
TYLER G. MITCHELL
139240
LICENSED PROFESSIONAL ENGINEER

GEORGETOWN TEXAS
more than welcome

Kimley»Horn F-928

Texas Department of Transportation

SH 29

TRAFFIC CONTROL PLAN PHASE II

SHEET 2 OF 3

CONT	SECT	JOB	HIGHWAY
0337	01	053	SH 29
DIST		COUNTY	SHEET NO.
AUS		WILLIAMSON	30

DATE: 12/18/2025 1:42:41 PM
FILE: pw:\\kimley-horn.com:kh-pw-01/Documents/01 Active Projects/TX-GEO-069284005 - SH 29 Widening/4 - Design/Plan Set/2. TCP/SH29_K_TCP_PH2_03.dgn

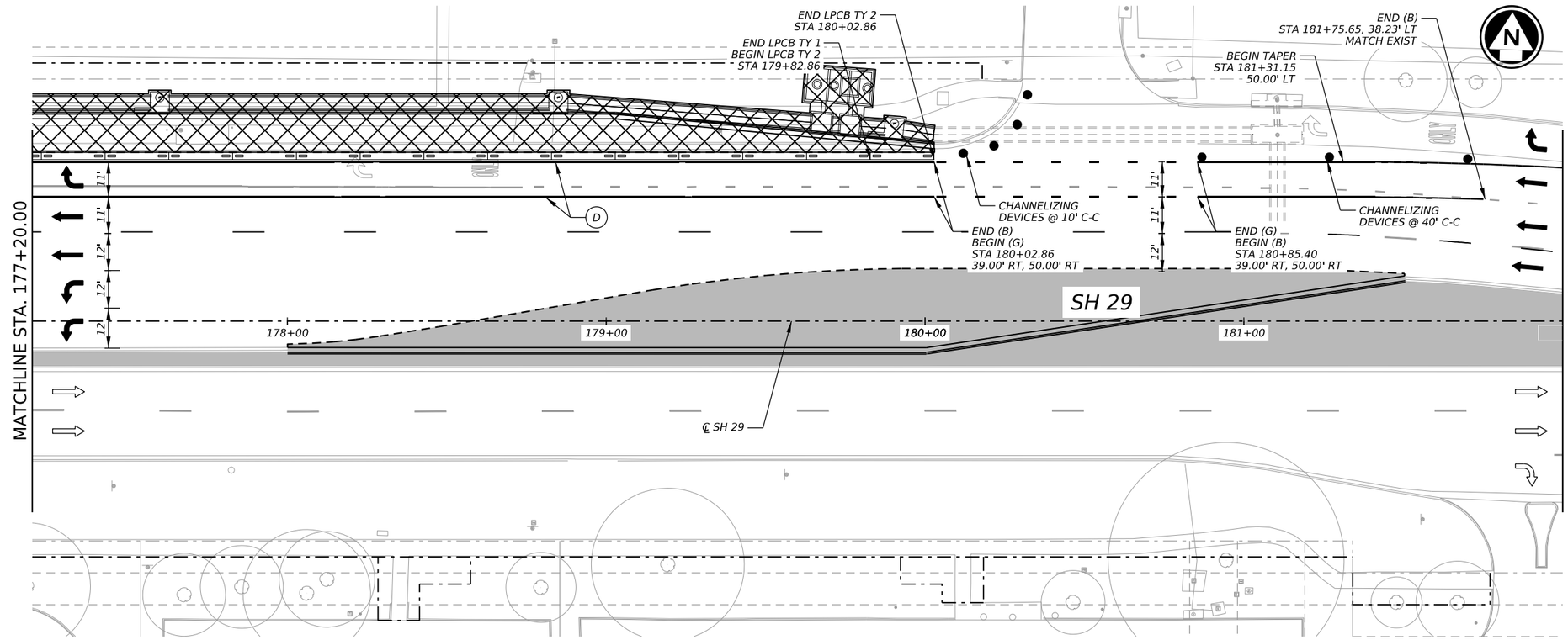

LEGEND

●	CHANNELIZING DEVICES
→	TRAFFIC FLOW INSIDE WORK ZONE
◎	WORK ZONE SIGN POST
▨	CONSTRUCTION THIS PHASE
▨	BORED LOCATION
▨	CONSTRUCTION PREVIOUS PHASE
Ⓐ	WK ZN PAV MRK REMOVABLE (W) 6" (BRK)
Ⓑ	WK ZN PAV MRK REMOVABLE (W) 6" (SLD)
Ⓒ	WK ZN PAV MRK NON-REMOVABLE (W) 6" (BRK)
Ⓓ	WK ZN PAV MRK NON-REMOVABLE (W) 6" (SLD)
Ⓔ	WK ZN PAV MRK REMOVABLE (Y) 6" (SLD)
Ⓕ	WK ZN PAV MRK NON-REMOVABLE (Y) 6" (SLD)
Ⓖ	WK ZN PAV MRK REMOVABLE (W) 6" (DOT)
Ⓗ	WK ZN PAV MRK NON-REMOVABLE (W) 24" (SLD)
Ⓘ	WK ZN PAV MRK REMOVABLE (W) 24" (SLD)

NOTES:
1. CONTRACTOR TO PHASE CONSTRUCT AND UTILIZE EXISTING RAMPS TO MAINTAIN PEDESTRIAN CROSSING. SEE TCP NARRATIVE FOR ADDITIONAL INFORMATION.
2. CONTRACTOR TO PROVIDE BUSINESS ACCESS SIGNS DURING CONSTRUCTION.

HORIZ. 0' 20' 40'

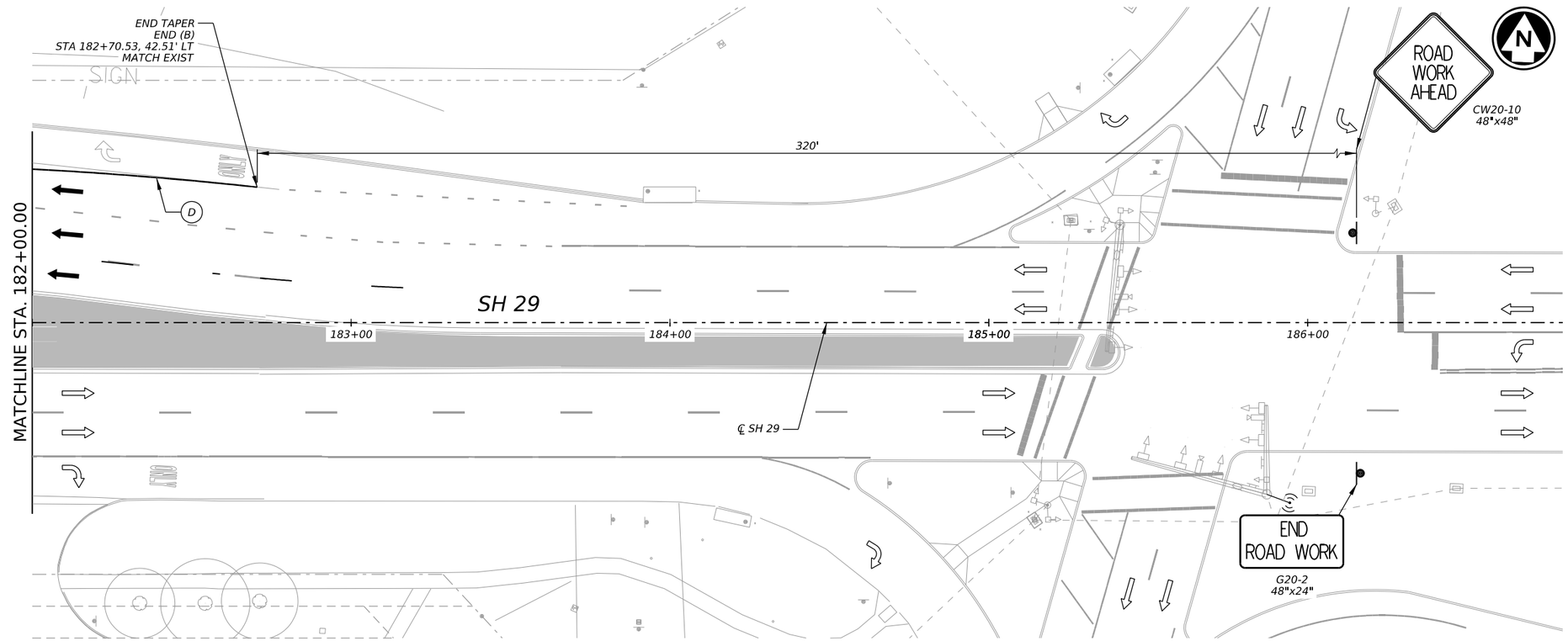

Tyler G. Mitchell
12/18/2025

STATE OF TEXAS
TYLER G. MITCHELL
139240
LICENSED
PROFESSIONAL ENGINEER

GEORGETOWN
TEXAS
more than welcome

Kimley»Horn
F-928

Texas Department of Transportation

SH 29

TRAFFIC CONTROL PLAN PHASE II

SHEET 3 OF 3

CONT	SECT	JOB	HIGHWAY
0337	01	053	SH 29
DIST	COUNTY		SHEET NO.
AUS	WILLIAMSON		31

DATE: 12/18/2025 1:43:01 PM
FILE: p:\0337\01\053\Design\Plan Set\2. TCP\SH29_K_TCP_PH2_05.dgn

DW: CK: DW: CK:

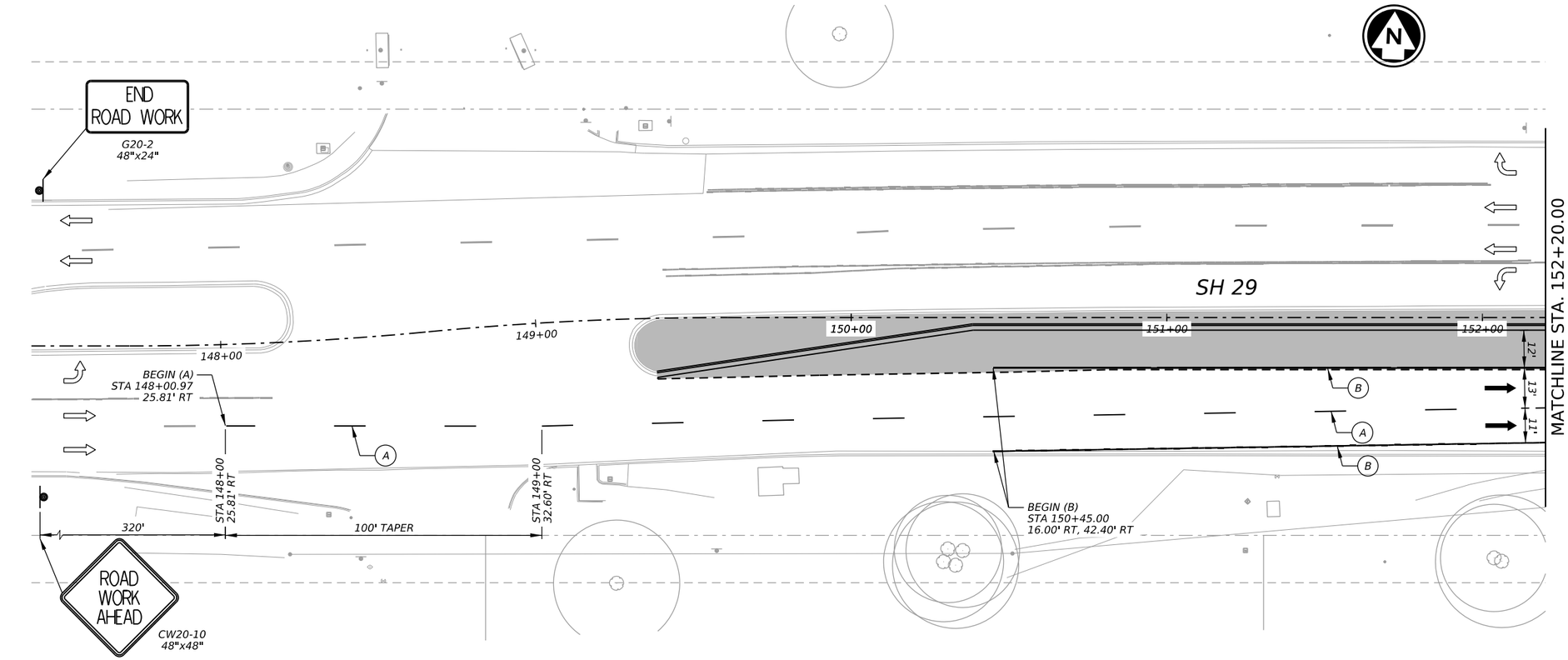

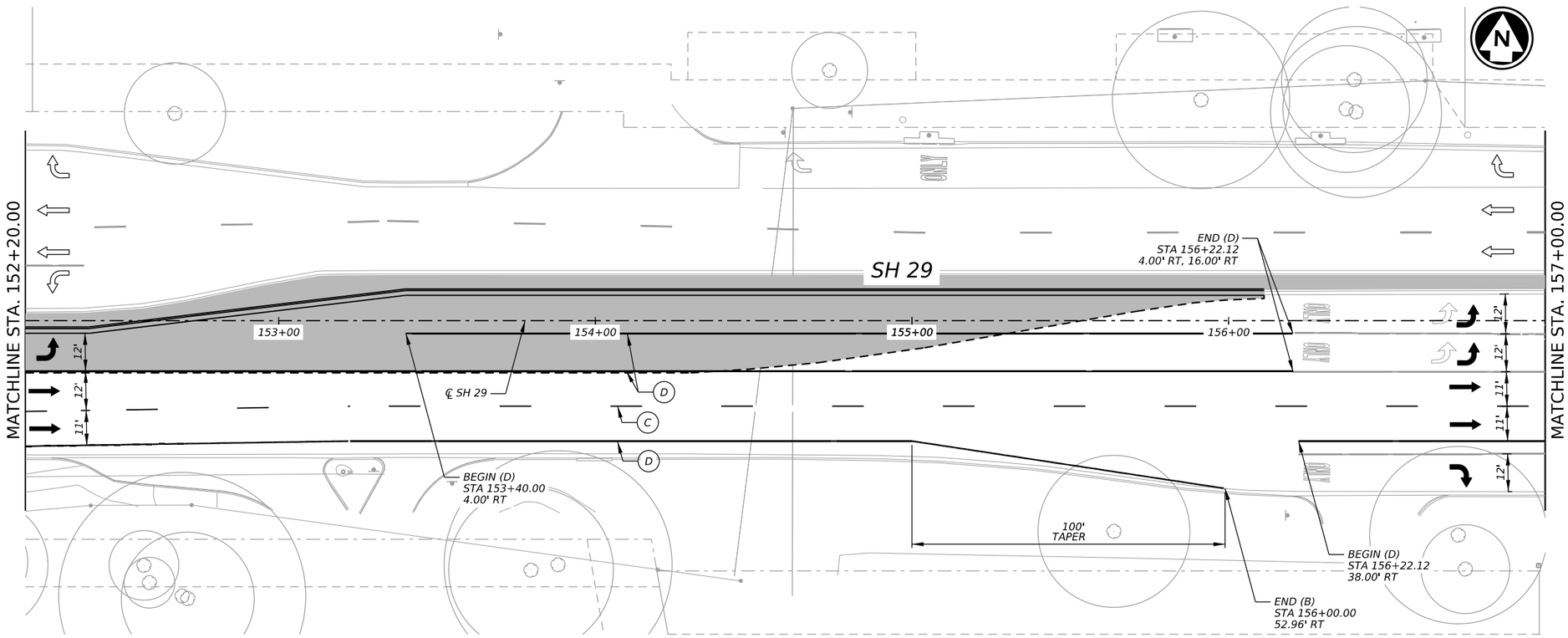

LEGEND

●	CHANNELIZING DEVICES
→	TRAFFIC FLOW INSIDE WORK ZONE
◎	WORK ZONE SIGN POST
	CONSTRUCTION THIS PHASE
	BORED LOCATION
	CONSTRUCTION PREVIOUS PHASE
A	WK ZN PAV MRK REMOVABLE (W) 6" (BRK)
B	WK ZN PAV MRK REMOVABLE (W) 6" (SLD)
C	WK ZN PAV MRK NON-REMOVABLE (W) 6" (BRK)
D	WK ZN PAV MRK NON-REMOVABLE (W) 6" (SLD)
E	WK ZN PAV MRK REMOVABLE (Y) 6" (SLD)
F	WK ZN PAV MRK NON-REMOVABLE (Y) 6" (SLD)
G	WK ZN PAV MRK REMOVABLE (W) 6" (DOT)
H	WK ZN PAV MRK NON-REMOVABLE (W) 24" (SLD)
I	WK ZN PAV MRK REMOVABLE (W) 24" (SLD)

NOTES:
1. CONTRACTOR TO PHASE CONSTRUCT AND UTILIZE EXISTING RAMPS TO MAINTAIN PEDESTRIAN CROSSING. SEE TCP NARRATIVE FOR ADDITIONAL INFORMATION.
2. CONTRACTOR TO PROVIDE BUSINESS ACCESS SIGNS DURING CONSTRUCTION.

HORIZ. 0' 20' 40'

12/18/2025

STATE OF TEXAS
TYLER G. MITCHELL
139240
LICENSED
PROFESSIONAL ENGINEER

GEORGETOWN TEXAS
more than welcome

Kimley»Horn F-928

Texas Department of Transportation

SH 29

TRAFFIC CONTROL PLAN PHASE III

SHEET 1 OF 5

CONT	SECT	JOB	HIGHWAY
0337	01	053	SH 29
DIST		COUNTY	SHEET NO.
AUS		WILLIAMSON	32

DATE: 12/18/2025 1:43:23 PM
FILE: pw://kh-pw-01/Documents/01 Active Projects/TX-GEO-069284005 - SH 29 Widening/4 - Design/Plan Set/2. TCP/SH29_K_TCP_PH3_01.dgn

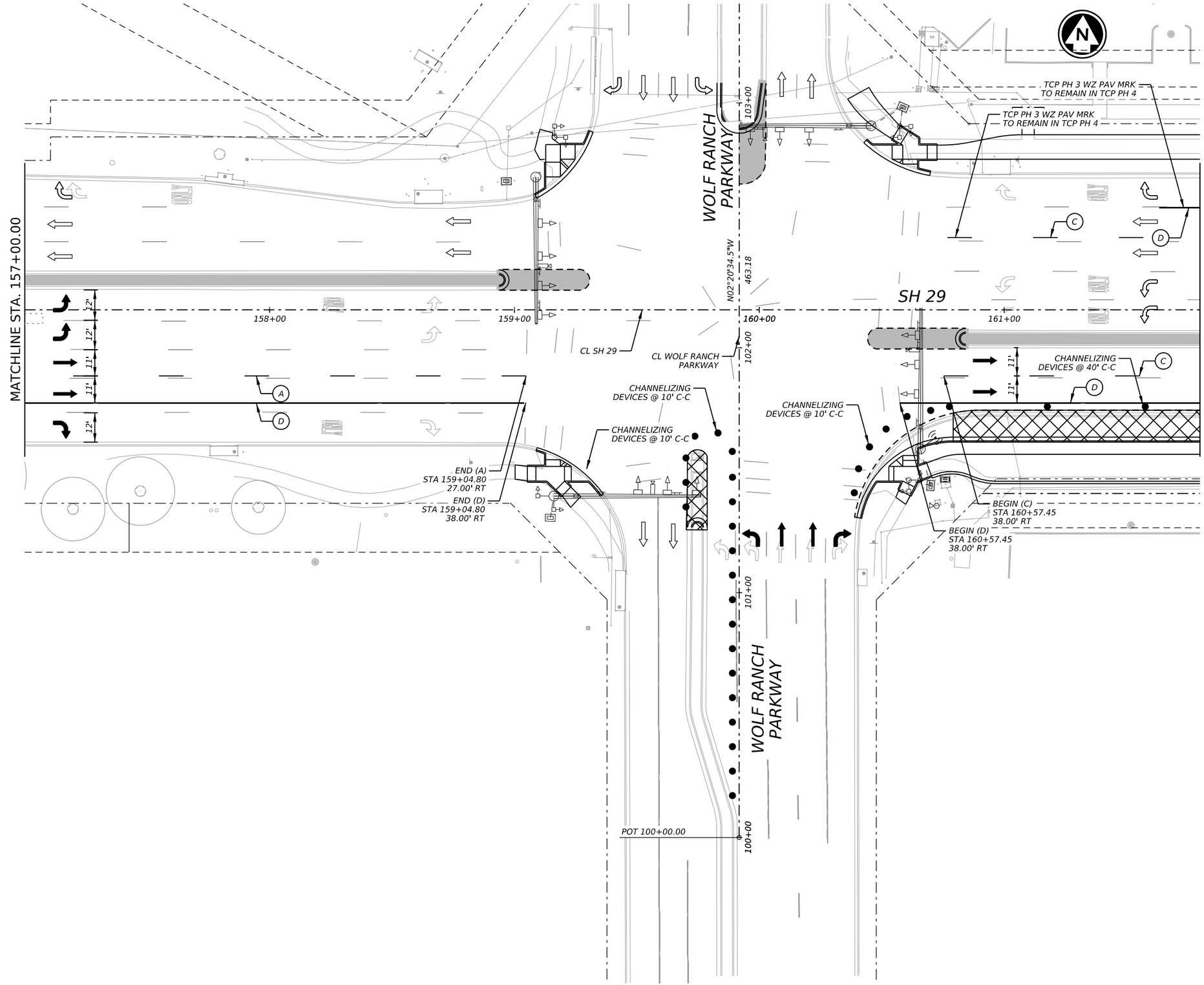

LEGEND

●	CHANNELIZING DEVICES
→	TRAFFIC FLOW INSIDE WORK ZONE
◎	WORK ZONE SIGN POST
	CONSTRUCTION THIS PHASE
	BORED LOCATION
	CONSTRUCTION PREVIOUS PHASE
A	WK ZN PAV MRK REMOVABLE (W) 6" (BRK)
B	WK ZN PAV MRK REMOVABLE (W) 6" (SLD)
C	WK ZN PAV MRK NON-REMOVABLE (W) 6" (BRK)
D	WK ZN PAV MRK NON-REMOVABLE (W) 6" (SLD)
E	WK ZN PAV MRK REMOVABLE (Y) 6" (SLD)
F	WK ZN PAV MRK NON-REMOVABLE (Y) 6" (SLD)
G	WK ZN PAV MRK REMOVABLE (W) 6" (DOT)
H	WK ZN PAV MRK NON-REMOVABLE (W) 24" (SLD)
I	WK ZN PAV MRK REMOVABLE (W) 24" (SLD)

NOTES:
1. CONTRACTOR TO PHASE CONSTRUCT AND UTILIZE EXISTING RAMPS TO MAINTAIN PEDESTRIAN CROSSING. SEE TCP NARRATIVE FOR ADDITIONAL INFORMATION.
2. CONTRACTOR TO PROVIDE BUSINESS ACCESS SIGNS DURING CONSTRUCTION.

HORIZ. 0' 20' 40'

12/18/2025

STATE OF TEXAS
TYLER G. MITCHELL
139240
LICENSED PROFESSIONAL ENGINEER

GEORGETOWN TEXAS
more than welcome

Kimley»Horn F-928

Texas Department of Transportation

SH 29

TRAFFIC CONTROL PLAN PHASE III

SHEET 2 OF 5

CONT	SECT	JOB	HIGHWAY
0337	01	053	SH 29
DIST		COUNTY	SHEET NO.
AUS		WILLIAMSON	33

DATE: 12/18/2025 1:43:43 PM
FILE: pw:\\kimley-horn.com:kh-pw-01/Documents/01 Active Projects/TX-GEO-069284005 - SH 29 Widening/4 - Design/Plan Set/2. TCP/SH29_K_TCP_PH3_02.dgn

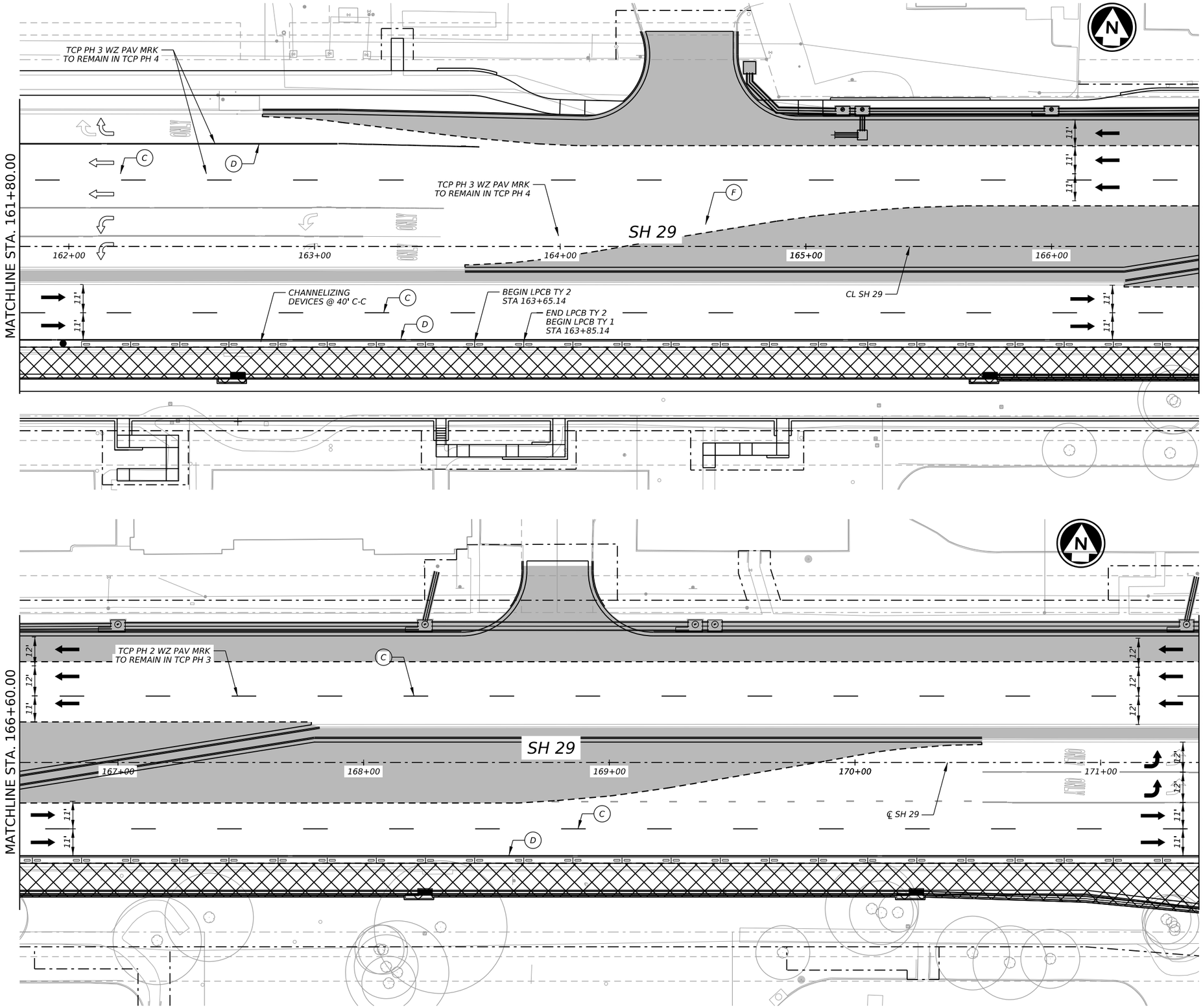

LEGEND

●	CHANNELIZING DEVICES
→	TRAFFIC FLOW INSIDE WORK ZONE
◎	WORK ZONE SIGN POST
▨	CONSTRUCTION THIS PHASE
▨	BORED LOCATION
▨	CONSTRUCTION PREVIOUS PHASE
Ⓐ	WK ZN PAV MRK REMOVABLE (W) 6" (BRK)
Ⓑ	WK ZN PAV MRK REMOVABLE (W) 6" (SLD)
Ⓒ	WK ZN PAV MRK NON-REMOVABLE (W) 6" (BRK)
Ⓓ	WK ZN PAV MRK NON-REMOVABLE (W) 6" (SLD)
Ⓔ	WK ZN PAV MRK REMOVABLE (Y) 6" (SLD)
Ⓕ	WK ZN PAV MRK NON-REMOVABLE (Y) 6" (SLD)
Ⓖ	WK ZN PAV MRK REMOVABLE (W) 6" (DOT)
Ⓗ	WK ZN PAV MRK NON-REMOVABLE (W) 24" (SLD)
Ⓘ	WK ZN PAV MRK REMOVABLE (W) 24" (SLD)

NOTES:
1. CONTRACTOR TO PHASE CONSTRUCT AND UTILIZE EXISTING RAMPS TO MAINTAIN PEDESTRIAN CROSSING. SEE TCP NARRATIVE FOR ADDITIONAL INFORMATION.
2. CONTRACTOR TO PROVIDE BUSINESS ACCESS SIGNS DURING CONSTRUCTION.

HORIZ. 0' 20' 40'

12/18/2025

TYLER G. MITCHELL
139240
LICENSED
PROFESSIONAL ENGINEER
STATE OF TEXAS

GEORGETOWN
TEXAS
more than welcome

Kimley»Horn
F-928

Texas Department of Transportation

SH 29

TRAFFIC CONTROL PLAN PHASE III

SHEET 3 OF 5

CONT	SECT	JOB	HIGHWAY
0337	01	053	SH 29
DIST	COUNTY		SHEET NO.
AUS	WILLIAMSON		34

DATE: 12/18/2025 1:44:09 PM
FILE: p:\0337\01\053\Design\Plan Set\2. TCP\SH29_K_TCP_PH3_03.dgn

DW:
CK:
DW:
CK:

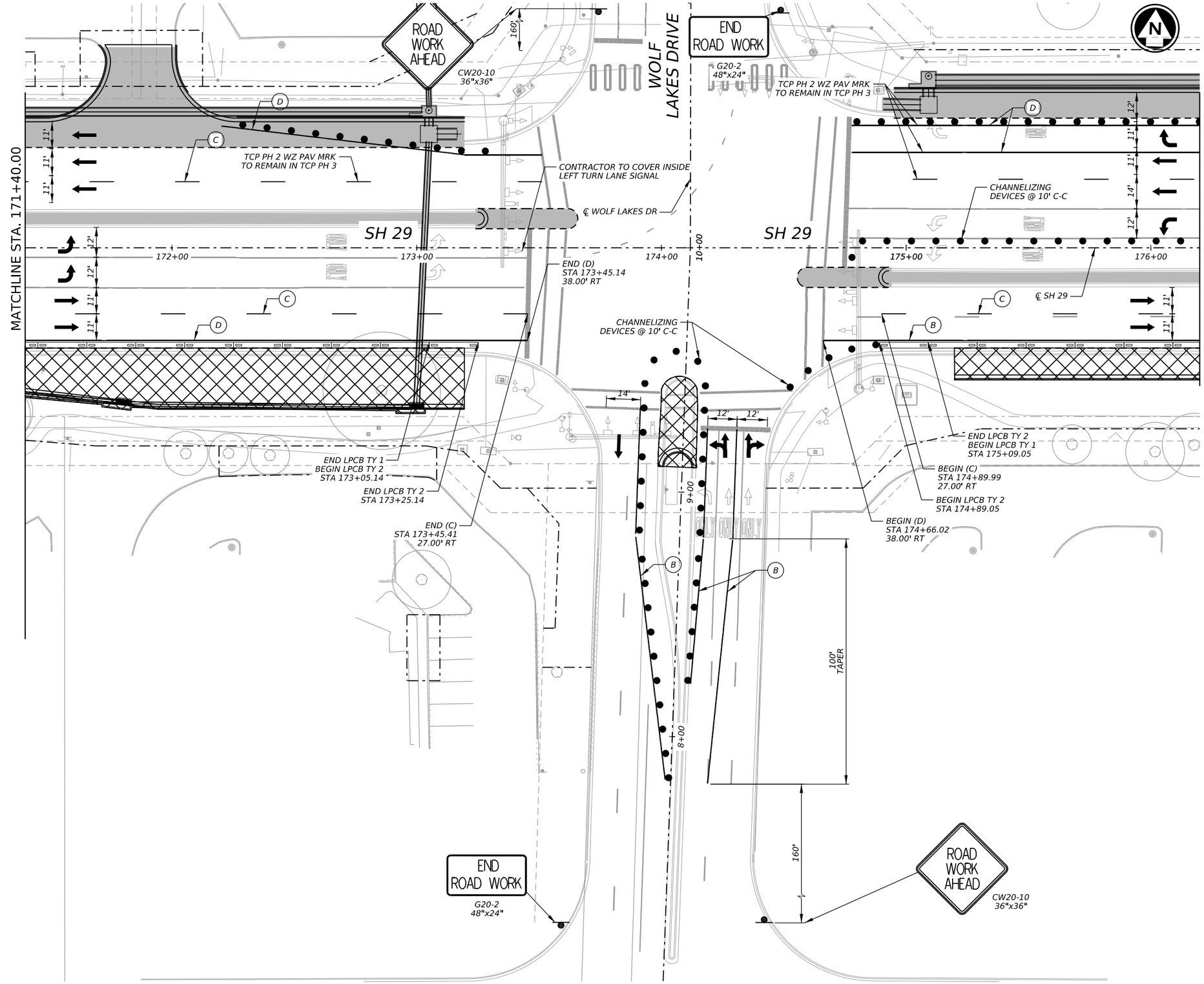

LEGEND

●	CHANNELIZING DEVICES
→	TRAFFIC FLOW INSIDE WORK ZONE
◎	WORK ZONE SIGN POST
	CONSTRUCTION THIS PHASE
	BORED LOCATION
	CONSTRUCTION PREVIOUS PHASE
A	WK ZN PAV MRK REMOVABLE (W) 6" (BRK)
B	WK ZN PAV MRK REMOVABLE (W) 6" (SLD)
C	WK ZN PAV MRK NON-REMOVABLE (W) 6" (BRK)
D	WK ZN PAV MRK NON-REMOVABLE (W) 6" (SLD)
E	WK ZN PAV MRK REMOVABLE (Y) 6" (SLD)
F	WK ZN PAV MRK NON-REMOVABLE (Y) 6" (SLD)
G	WK ZN PAV MRK REMOVABLE (W) 6" (DOT)
H	WK ZN PAV MRK NON-REMOVABLE (W) 24" (SLD)
I	WK ZN PAV MRK REMOVABLE (W) 24" (SLD)

NOTES:
1. CONTRACTOR TO PHASE CONSTRUCT AND UTILIZE EXISTING RAMPS TO MAINTAIN PEDESTRIAN CROSSING. SEE TCP NARRATIVE FOR ADDITIONAL INFORMATION.
2. CONTRACTOR TO PROVIDE BUSINESS ACCESS SIGNS DURING CONSTRUCTION.

HORIZ. 0' 20' 40'

12/18/2025

STATE OF TEXAS
TYLER G. MITCHELL
139240
LICENSED
PROFESSIONAL ENGINEER

GEORGETOWN TEXAS
more than welcome

Kimley»Horn F-928

Texas Department of Transportation

SH 29

TRAFFIC CONTROL PLAN PHASE III

SHEET 4 OF 5

CONT	SECT	JOB	HIGHWAY
0337	01	053	SH 29
DIST		COUNTY	SHEET NO.
AUS		WILLIAMSON	35

DATE: 12/18/2025 1:44:30 PM
FILE: pw:\\KHPW-01\Documents\01 Active Projects\TX-GEO-069284005 - SH 29 Widening\4 - Design\Plan Set\2. TCP\SH29_K_TCP_PH3_04.dgn

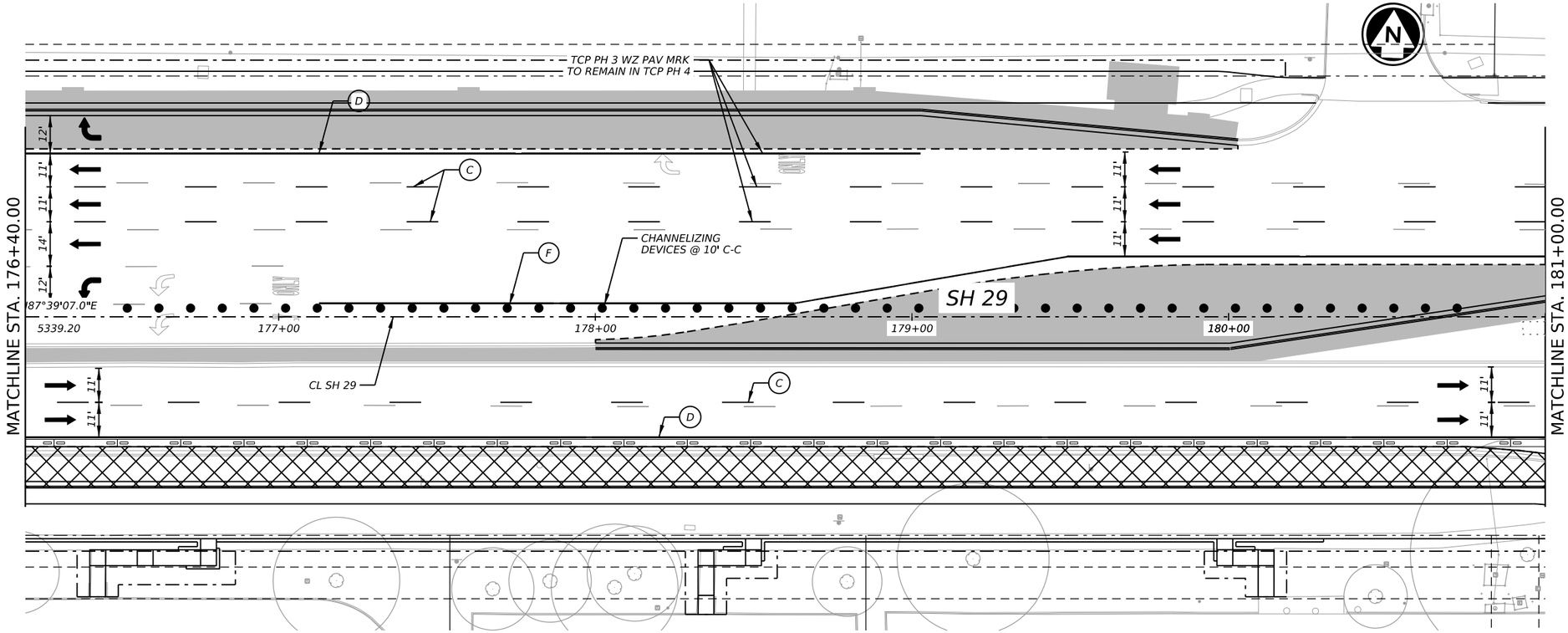

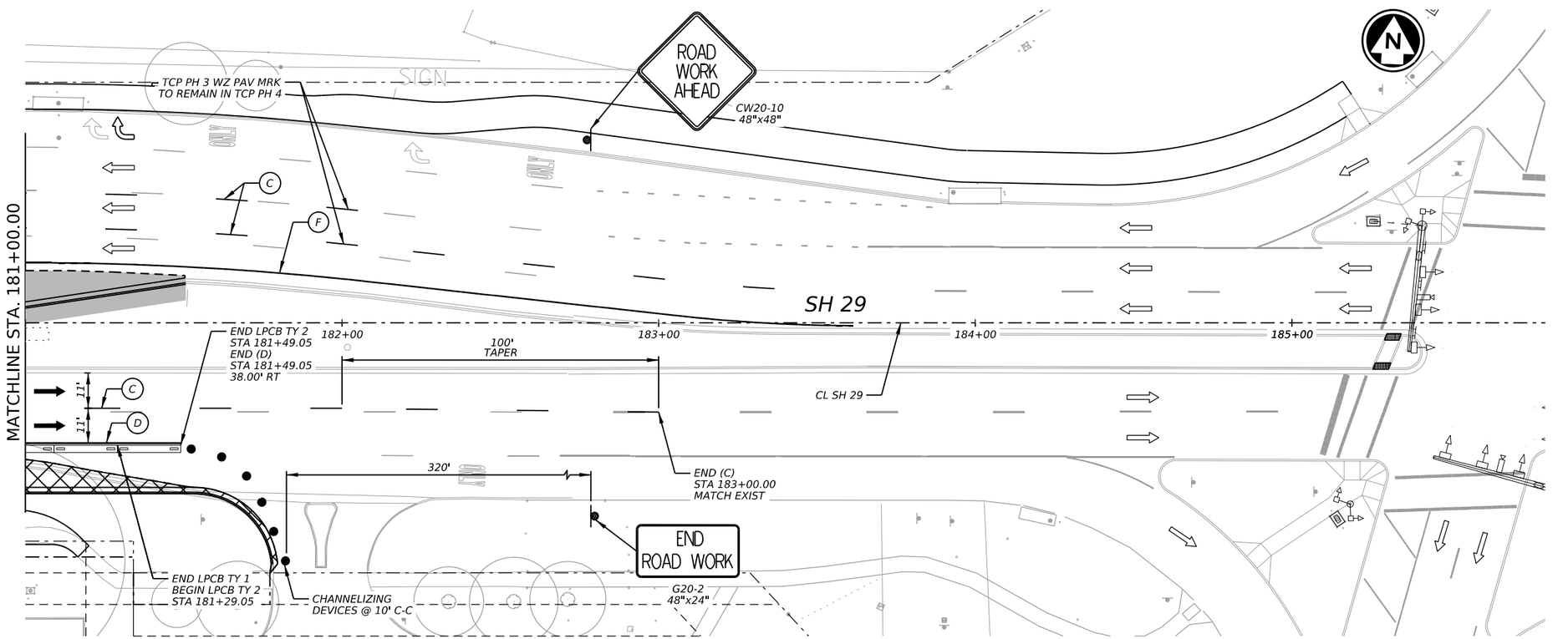

LEGEND

●	CHANNELIZING DEVICES
→	TRAFFIC FLOW INSIDE WORK ZONE
◎	WORK ZONE SIGN POST
	CONSTRUCTION THIS PHASE
	BORED LOCATION
	CONSTRUCTION PREVIOUS PHASE
A	WK ZN PAV MRK REMOVABLE (W) 6" (BRK)
B	WK ZN PAV MRK REMOVABLE (W) 6" (SLD)
C	WK ZN PAV MRK NON-REMOVABLE (W) 6" (BRK)
D	WK ZN PAV MRK NON-REMOVABLE (W) 6" (SLD)
E	WK ZN PAV MRK REMOVABLE (Y) 6" (SLD)
F	WK ZN PAV MRK NON-REMOVABLE (Y) 6" (SLD)
G	WK ZN PAV MRK REMOVABLE (W) 6" (DOT)
H	WK ZN PAV MRK NON-REMOVABLE (W) 24" (SLD)
I	WK ZN PAV MRK REMOVABLE (W) 24" (SLD)

NOTES:
1. CONTRACTOR TO PHASE CONSTRUCT AND UTILIZE EXISTING RAMPS TO MAINTAIN PEDESTRIAN CROSSING. SEE TCP NARRATIVE FOR ADDITIONAL INFORMATION.
2. CONTRACTOR TO PROVIDE BUSINESS ACCESS SIGNS DURING CONSTRUCTION.

HORIZ. 0' 20' 40'

12/18/2025

STATE OF TEXAS
TYLER G. MITCHELL
139240
LICENSED
PROFESSIONAL ENGINEER

GEORGETOWN
TEXAS
more than welcome

Kimley»Horn
F-928

Texas Department of Transportation

SH 29

TRAFFIC CONTROL
PLAN
PHASE III

SHEET 5 OF 5

CONT	SECT	JOB	HIGHWAY
0337	01	053	SH 29
DIST		COUNTY	SHEET NO.
AUS		WILLIAMSON	36

DATE: 12/18/2025 1:44:50 PM
FILE: pw:\\kimleyhorn.com:kh-pw-01/Documents/01 Active Projects/TX-GEO-069284005 - SH 29 Widening/4 - Design/Plan Set/2. TCP/SH29_K_TCP_PH3_05.dgn

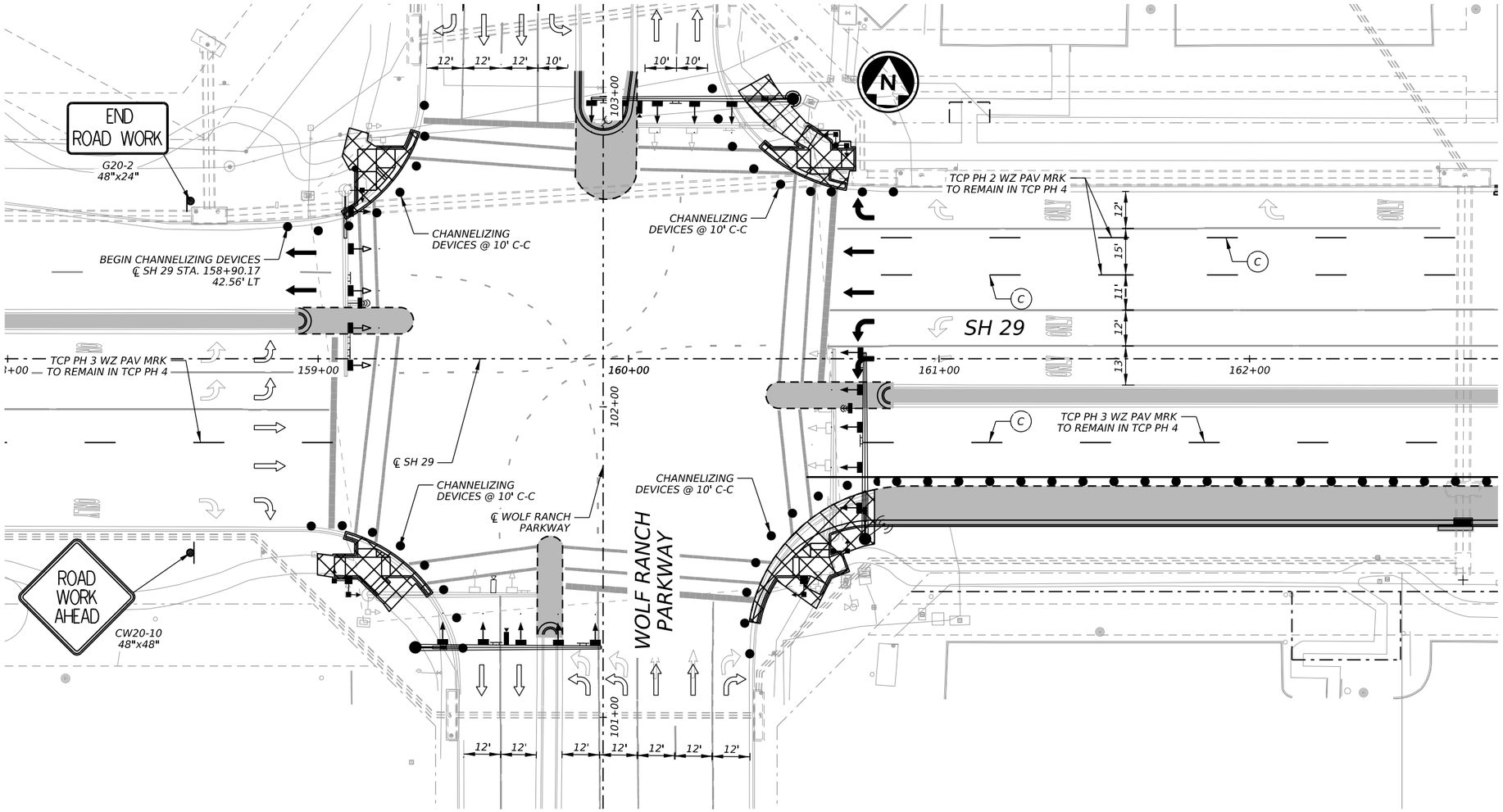

LEGEND

●	CHANNELIZING DEVICES
→	TRAFFIC FLOW INSIDE WORK ZONE
◎	WORK ZONE SIGN POST
▨	CONSTRUCTION THIS PHASE
▨	BORED LOCATION
▨	CONSTRUCTION PREVIOUS PHASE
Ⓐ	WK ZN PAV MRK REMOVABLE (W) 6" (BRK)
Ⓑ	WK ZN PAV MRK REMOVABLE (W) 6" (SLD)
Ⓒ	WK ZN PAV MRK NON-REMOVABLE (W) 6" (BRK)
Ⓓ	WK ZN PAV MRK NON-REMOVABLE (W) 6" (SLD)
Ⓔ	WK ZN PAV MRK REMOVABLE (Y) 6" (SLD)
Ⓕ	WK ZN PAV MRK NON-REMOVABLE (Y) 6" (SLD)
Ⓖ	WK ZN PAV MRK REMOVABLE (W) 6" (DOT)
Ⓗ	WK ZN PAV MRK NON-REMOVABLE (W) 24" (SLD)
Ⓘ	WK ZN PAV MRK REMOVABLE (W) 24" (SLD)

NOTES:
1. CONTRACTOR TO PHASE CONSTRUCT AND UTILIZE EXISTING RAMPS TO MAINTAIN PEDESTRIAN CROSSING. SEE TCP NARRATIVE FOR ADDITIONAL INFORMATION.
2. CONTRACTOR TO PROVIDE BUSINESS ACCESS SIGNS DURING CONSTRUCTION.

HORIZ. 0' 20' 40'

12/18/2025

TYLER G. MITCHELL
139240
LICENSED
PROFESSIONAL ENGINEER
STATE OF TEXAS

GEORGETOWN
TEXAS
more than welcome

Kimley»Horn F-928

Texas Department of Transportation

SH 29

TRAFFIC CONTROL PLAN PHASE IV

SHEET 1 OF 2

CONT	SECT	JOB	HIGHWAY
0337	01	053	SH 29

DIST	COUNTY	SHEET NO.
AUS	WILLIAMSON	37

DATE: 12/18/2025 1:45:11 PM
FILE: pw://kh-pw.bentley.com:kh-pw-01/Documents/01 Active Projects/TX-GEO-069284005 - SH 29 Widening/4 - Design/Plan Set/2. TCP/SH29_K_TCP_PH4_01.dgn

DW: CK: DW: CK:

MATCHLINE STA. 11+30.00

BEGIN (D)
STA 172+20.02
49.75' LT

END (D)
STA 173+51.27, 38.00' LT
END (C)
STA 173+51.27, 27.00' LT

TCP PH 3 WZ PAV MRK
TO REMAIN IN TCP PH 4

TCP PH 2 WZ PAV MRK
TO REMAIN IN TCP PH 4

CHANNELIZING
DEVICES @ 10' C-C

320'

100'
TAPER

SH 29

175+00

NOTE: CONTRACTOR TO BARREL
OFF INSIDE LEFT TURN LANE

CHANNELIZING
DEVICES @ 10' C-C

WOLF
LAKES DRIVE

11+00

10+00

9+00

8+00

11'

12'

174+00

CONTRACTOR TO COVER INSIDE
LEFT TURN LANE SIGNAL

℄ WOLF LAKES DR

CHANNELIZING
DEVICES @ 10' C-C

BEGIN (D)
STA 174+77.70
39.00' LT, 50.00' LT

℄ SH 29

CONTRACTOR TO COVER
INSIDE LEFT TURN
LANE SIGNAL

175+00

TCP PH 3 WZ PAV MRK
TO REMAIN IN TCP PH 4

320'

ROAD
WORK
AHEAD

CW20-10
48"x48"

TCP PH 2 WZ PAV MRK
TO REMAIN IN TCP PH 4

320'

CHANNELIZING
DEVICES @ 10' C-C

END
ROAD WORK

G20-2
48"x24"

ONLY ONLY ONLY

ROAD
WORK
AHEAD

CW20-10
48"x48"

END CHANNELIZING DEVICES
℄ WOLF LAKES DR STA. 12+48.17

℄ WOLF LAKES DR

END CHANNELIZING DEVICES
℄ WOLF LAKES DR STA. 11+99.56

12+00

100' TAPER

END
ROAD WORK

G20-2
48"x24"

ROAD
WORK
AHEAD

CW20-10
48"x48"

END
ROAD WORK

G20-2
48"x24"

MATCHLINE STA. 11+30.00

LEGEND

●	CHANNELIZING DEVICES
→	TRAFFIC FLOW INSIDE WORK ZONE
◎	WORK ZONE SIGN POST
▨	CONSTRUCTION THIS PHASE
▨	BORED LOCATION
▨	CONSTRUCTION PREVIOUS PHASE
(A)	WK ZN PAV MRK REMOVABLE (W) 6" (BRK)
(B)	WK ZN PAV MRK REMOVABLE (W) 6" (SLD)
(C)	WK ZN PAV MRK NON-REMOVABLE (W) 6" (BRK)
(D)	WK ZN PAV MRK NON-REMOVABLE (W) 6" (SLD)
(E)	WK ZN PAV MRK REMOVABLE (Y) 6" (SLD)
(F)	WK ZN PAV MRK NON-REMOVABLE (Y) 6" (SLD)
(G)	WK ZN PAV MRK REMOVABLE (W) 6" (DOT)
(H)	WK ZN PAV MRK NON-REMOVABLE (W) 24" (SLD)
(I)	WK ZN PAV MRK REMOVABLE (W) 24" (SLD)

NOTES:
1. CONTRACTOR TO PHASE CONSTRUCT AND UTILIZE EXISTING RAMPS TO MAINTAIN PEDESTRIAN CROSSING. SEE TCP NARRATIVE FOR ADDITIONAL INFORMATION.
2. CONTRACTOR TO PROVIDE BUSINESS ACCESS SIGNS DURING CONSTRUCTION.

HORIZ. 0' 20' 40'

12/18/2025

TYLER G. MITCHELL
139240
LICENSED
PROFESSIONAL ENGINEER
STATE OF TEXAS

GEORGETOWN
TEXAS
more than welcome

Kimley»Horn F-928

Texas Department of Transportation

SH 29

TRAFFIC CONTROL PLAN PHASE IV

SHEET 2 OF 2

CONT	SECT	JOB	HIGHWAY
0337	01	053	SH 29
DIST	COUNTY		SHEET NO.
AUS	WILLIAMSON		38

DATE: 12/18/2025 1:45:31 PM
FILE: pw://kh-pw.bentley.com:kh-pw-01/Documents/01 Active Projects/TX-GEO-069284005 - SH 29 Widening/4 - Design/Plan Set/2. TCP/SH29_K_TCP_PH4_02.dgn

DW: CK: DW: CK:

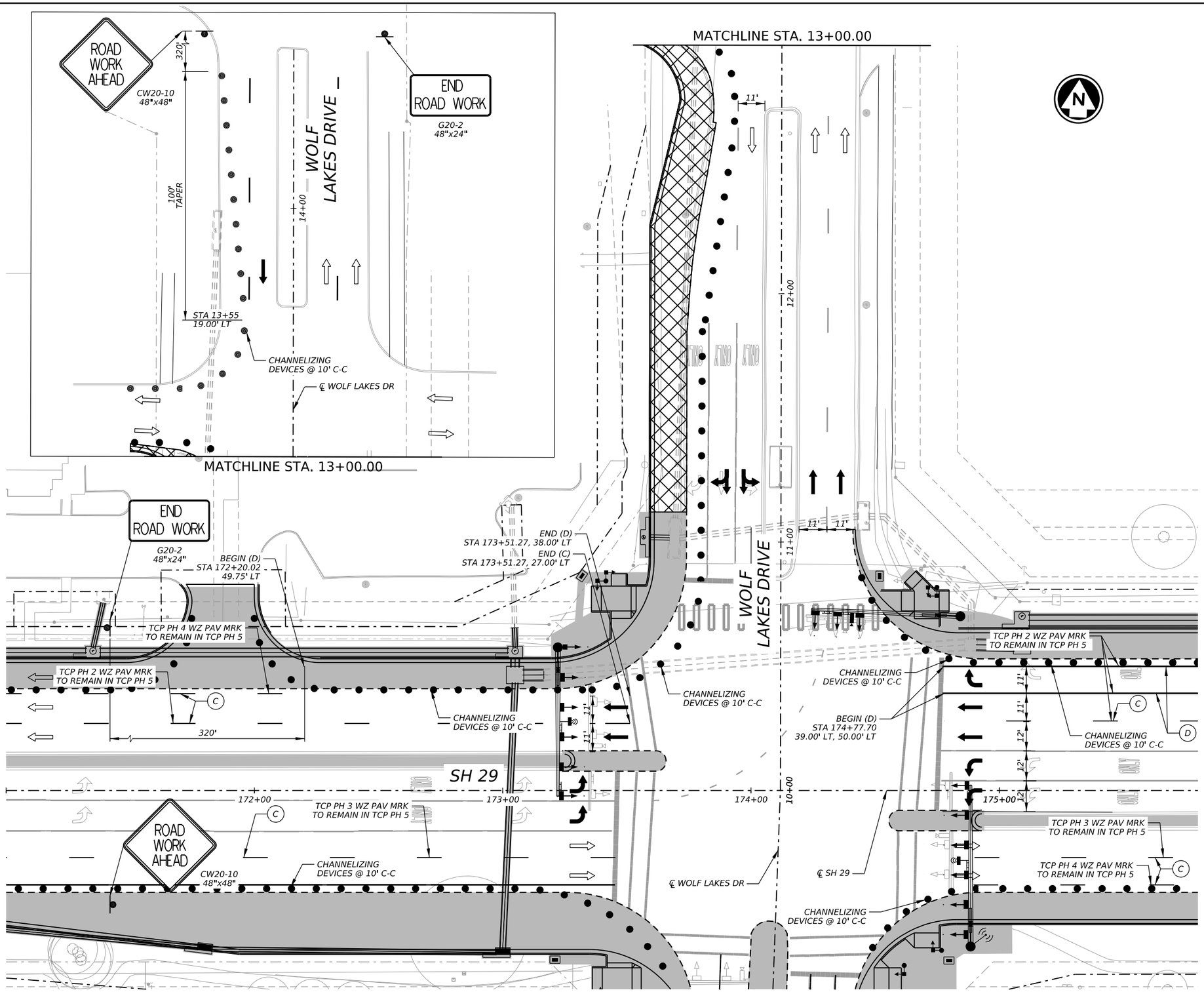

LEGEND

●	CHANNELIZING DEVICES
→	TRAFFIC FLOW INSIDE WORK ZONE
◎	WORK ZONE SIGN POST
	CONSTRUCTION THIS PHASE
	BORED LOCATION
	CONSTRUCTION PREVIOUS PHASE
A	WK ZN PAV MRK REMOVABLE (W) 6" (BRK)
B	WK ZN PAV MRK REMOVABLE (W) 6" (SLD)
C	WK ZN PAV MRK NON-REMOVABLE (W) 6" (BRK)
D	WK ZN PAV MRK NON-REMOVABLE (W) 6" (SLD)
E	WK ZN PAV MRK REMOVABLE (Y) 6" (SLD)
F	WK ZN PAV MRK NON-REMOVABLE (Y) 6" (SLD)
G	WK ZN PAV MRK REMOVABLE (W) 6" (DOT)
H	WK ZN PAV MRK NON-REMOVABLE (W) 24" (SLD)
I	WK ZN PAV MRK REMOVABLE (W) 24" (SLD)

NOTES:
1. CONTRACTOR TO PHASE CONSTRUCT AND UTILIZE EXISTING RAMPS TO MAINTAIN PEDESTRIAN CROSSING. SEE TCP NARRATIVE FOR ADDITIONAL INFORMATION.
2. CONTRACTOR TO PROVIDE BUSINESS ACCESS SIGNS DURING CONSTRUCTION.

HORIZ. 0' 20' 40'

STATE OF TEXAS
TYLER G. MITCHELL
139240
LICENSED
PROFESSIONAL ENGINEER

12/18/2025

GEORGETOWN TEXAS
more than welcome

Kimley»Horn F-928

Texas Department of Transportation

SH 29

TRAFFIC CONTROL PLAN PHASE V

SHEET 1 OF 1

CONT	SECT	JOB	HIGHWAY
0337	01	053	SH 29
DIST		COUNTY	SHEET NO.
AUS		WILLIAMSON	39

DATE: 12/18/2025 1:45:52 PM
FILE: pw:\\KHDENVER.com:kh-pw-01/Documents/01 Active Projects/TX-GEO-069284005 - SH 29 Widening/4 - Design/Plan Set/2. TCP/SH29_K_TCP_PH5_01.dgn

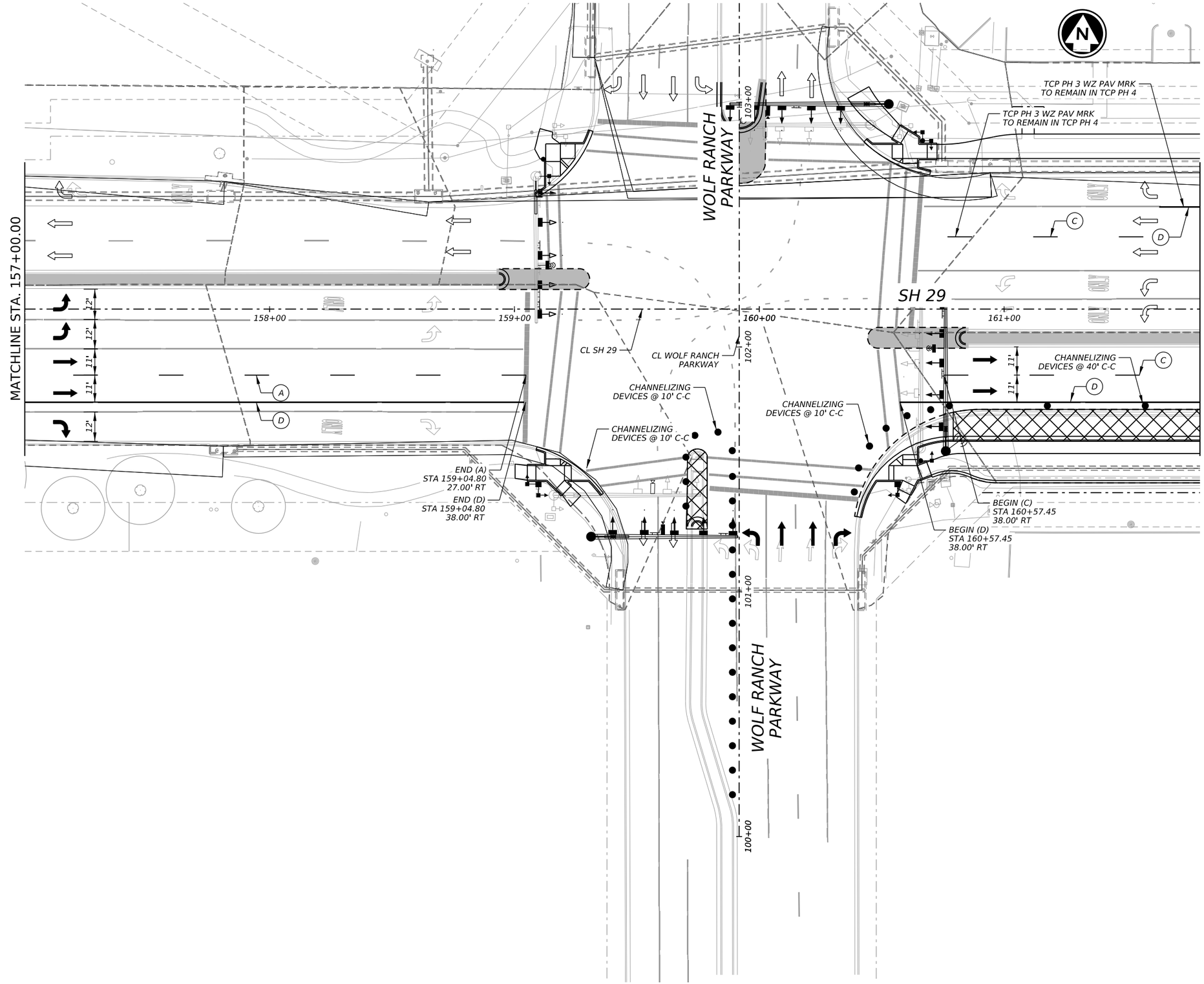

LEGEND

●	CHANNELIZING DEVICES
→	TRAFFIC FLOW INSIDE WORK ZONE
◎	WORK ZONE SIGN POST
	CONSTRUCTION THIS PHASE
	BORED LOCATION
	CONSTRUCTION PREVIOUS PHASE
A	WK ZN PAV MRK REMOVABLE (W) 6" (BRK)
B	WK ZN PAV MRK REMOVABLE (W) 6" (SLD)
C	WK ZN PAV MRK NON-REMOVABLE (W) 6" (BRK)
D	WK ZN PAV MRK NON-REMOVABLE (W) 6" (SLD)
E	WK ZN PAV MRK REMOVABLE (Y) 6" (SLD)
F	WK ZN PAV MRK NON-REMOVABLE (Y) 6" (SLD)
G	WK ZN PAV MRK REMOVABLE (W) 6" (DOT)
H	WK ZN PAV MRK NON-REMOVABLE (W) 24" (SLD)
I	WK ZN PAV MRK REMOVABLE (W) 24" (SLD)

NOTES:
1. CONTRACTOR TO PHASE CONSTRUCT AND UTILIZE EXISTING RAMPS TO MAINTAIN PEDESTRIAN CROSSING. SEE TCP NARRATIVE FOR ADDITIONAL INFORMATION.
2. CONTRACTOR TO PROVIDE BUSINESS ACCESS SIGNS DURING CONSTRUCTION.

HORIZ. 0' 20' 40'

12/18/2025

STATE OF TEXAS
TYLER G. MITCHELL
139240
LICENSED PROFESSIONAL ENGINEER

GEORGETOWN TEXAS
more than welcome

Kimley»Horn F-928

Texas Department of Transportation

SH 29

TRAFFIC CONTROL PLAN PHASE VI

SHEET 1 OF 4

CONT	SECT	JOB	HIGHWAY
0337	01	053	SH 29
DIST		COUNTY	SHEET NO.
AUS		WILLIAMSON	40

DATE: 12/18/2025 1:46:14 PM
FILE: pw:\\KHPW-01\Documents\01 Active Projects\TX-GEO-069284005 - SH 29 Widening\4 - Design\Plan Set\2. TCP\SH29_K_TCP_PH6_01.dgn

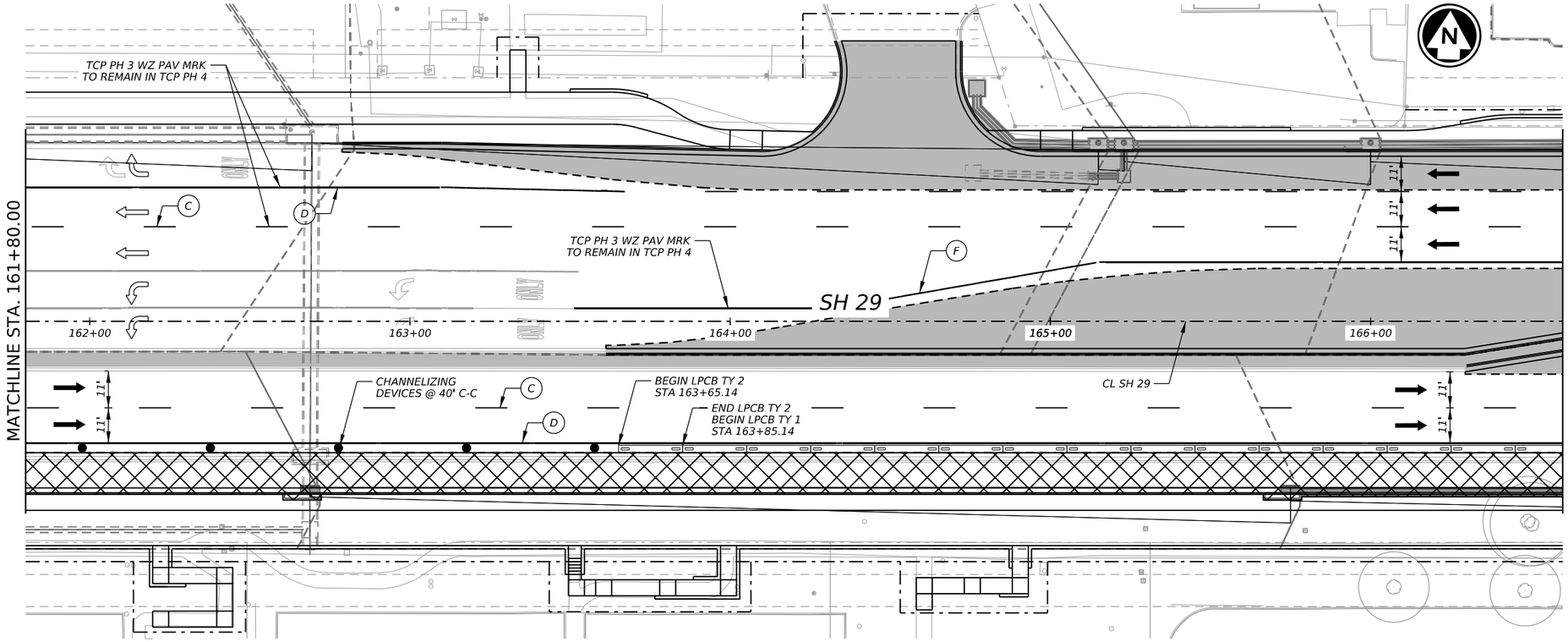

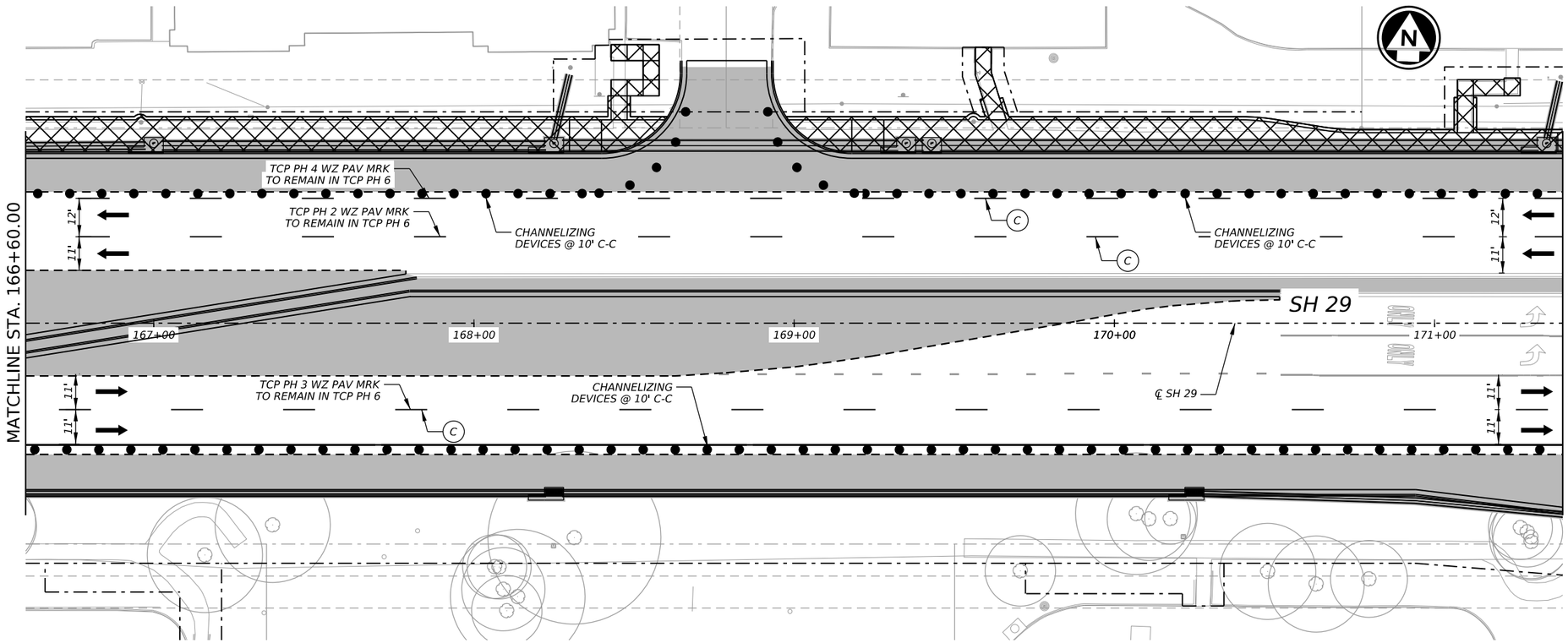

LEGEND

●	CHANNELIZING DEVICES
➡	TRAFFIC FLOW INSIDE WORK ZONE
◎	WORK ZONE SIGN POST
▨	CONSTRUCTION THIS PHASE
▨	BORED LOCATION
▩	CONSTRUCTION PREVIOUS PHASE
Ⓐ	WK ZN PAV MRK REMOVABLE (W) 6" (BRK)
Ⓑ	WK ZN PAV MRK REMOVABLE (W) 6" (SLD)
Ⓒ	WK ZN PAV MRK NON-REMOVABLE (W) 6" (BRK)
Ⓓ	WK ZN PAV MRK NON-REMOVABLE (W) 6" (SLD)
Ⓔ	WK ZN PAV MRK REMOVABLE (Y) 6" (SLD)
Ⓕ	WK ZN PAV MRK NON-REMOVABLE (Y) 6" (SLD)
Ⓖ	WK ZN PAV MRK REMOVABLE (W) 6" (DOT)
Ⓗ	WK ZN PAV MRK NON-REMOVABLE (W) 24" (SLD)
Ⓘ	WK ZN PAV MRK REMOVABLE (W) 24" (SLD)

NOTES:
1. CONTRACTOR TO PHASE CONSTRUCT AND UTILIZE EXISTING RAMPS TO MAINTAIN PEDESTRIAN CROSSING. SEE TCP NARRATIVE FOR ADDITIONAL INFORMATION.
2. CONTRACTOR TO PROVIDE BUSINESS ACCESS SIGNS DURING CONSTRUCTION.

HORIZ. 0' 20' 40'

1/21/2026

TYLER G. MITCHELL
139240
LICENSED
PROFESSIONAL ENGINEER
STATE OF TEXAS

GEORGETOWN
TEXAS
more than welcome

Kimley»Horn
F-928

Texas Department of Transportation

SH 29

TRAFFIC CONTROL PLAN PHASE VI

SHEET 2 OF 4

CONT	SECT	JOB	HIGHWAY
0337	01	053	SH 29
DIST	COUNTY		SHEET NO.
AUS	WILLIAMSON		41

DATE: 1/21/2026 9:27:19 AM
FILE: p:\0337-01-053\Design\Plan Set\2. TCP\SH29_K_TCP_PH6_02.dgn

DW: CK: DW: CK:

MATCHLINE STA. 11+00.00

END (B)
STA 173+51.27, 38.00' LT
END (A)
STA 173+51.27, 27.00' LT

WOLF LAKES DRIVE

MATCHLINE STA. 171+40.00

MATCHLINE STA. 180+20.00

SH 29

172+00 173+00 174+00 175+00 176+00

10+00

℄ SH 29

℄ WOLF LAKES DR

TCP PH 4 WZ PAV MRK
TO REMAIN IN TCP PH 6

TCP PH 2 WZ PAV MRK
TO REMAIN IN TCP PH 6

CHANNELIZING
DEVICES @ 10' C-C

TCP PH 3 WZ PAV MRK
TO REMAIN IN TCP PH 6

11' 11' 12' 12' 12' 12'

10' 10' 10'

ONLY ONLY ONLY

13+00

12+00

9+00

8+00

320'

END
ROAD WORK
G20-2
48"x24"

ROAD
WORK
AHEAD
CW20-10
48"x48"

MATCHLINE STA. 11+00.00

LEGEND

●	CHANNELIZING DEVICES
→	TRAFFIC FLOW INSIDE WORK ZONE
◎	WORK ZONE SIGN POST
▨	CONSTRUCTION THIS PHASE
▨	BORED LOCATION
▨	CONSTRUCTION PREVIOUS PHASE
Ⓐ	WK ZN PAV MRK REMOVABLE (W) 6" (BRK)
Ⓑ	WK ZN PAV MRK REMOVABLE (W) 6" (SLD)
Ⓒ	WK ZN PAV MRK NON-REMOVABLE (W) 6" (BRK)
Ⓓ	WK ZN PAV MRK NON-REMOVABLE (W) 6" (SLD)
Ⓔ	WK ZN PAV MRK REMOVABLE (Y) 6" (SLD)
Ⓕ	WK ZN PAV MRK NON-REMOVABLE (Y) 6" (SLD)
Ⓖ	WK ZN PAV MRK REMOVABLE (W) 6" (DOT)
Ⓗ	WK ZN PAV MRK NON-REMOVABLE (W) 24" (SLD)
Ⓘ	WK ZN PAV MRK REMOVABLE (W) 24" (SLD)

NOTES:
1. CONTRACTOR TO PHASE CONSTRUCT AND UTILIZE EXISTING RAMPS TO MAINTAIN PEDESTRIAN CROSSING. SEE TCP NARRATIVE FOR ADDITIONAL INFORMATION.
2. CONTRACTOR TO PROVIDE BUSINESS ACCESS SIGNS DURING CONSTRUCTION.

HORIZ. 0' 20' 40'

1/21/2026

TYLER G. MITCHELL
139240
LICENSED
PROFESSIONAL ENGINEER
STATE OF TEXAS

GEORGETOWN
TEXAS
more than welcome

Kimley»Horn F-928

Texas Department of Transportation

SH 29

TRAFFIC CONTROL
PLAN
PHASE VI

SHEET 3 OF 4

CONT	SECT	JOB	HIGHWAY
0337	01	053	SH 29
DIST	COUNTY		SHEET NO.
AUS	WILLIAMSON		42

DATE: 1/21/2026 9:28:49 AM
FILE: pw://kimley-horn.com:kh-pw-01/Documents/01 Active Projects/TX-GEO-069284005 - SH 29 Widening/4 - Design/Plan Set/2. TCP/SH29_K_TCP_PH6_03.dgn

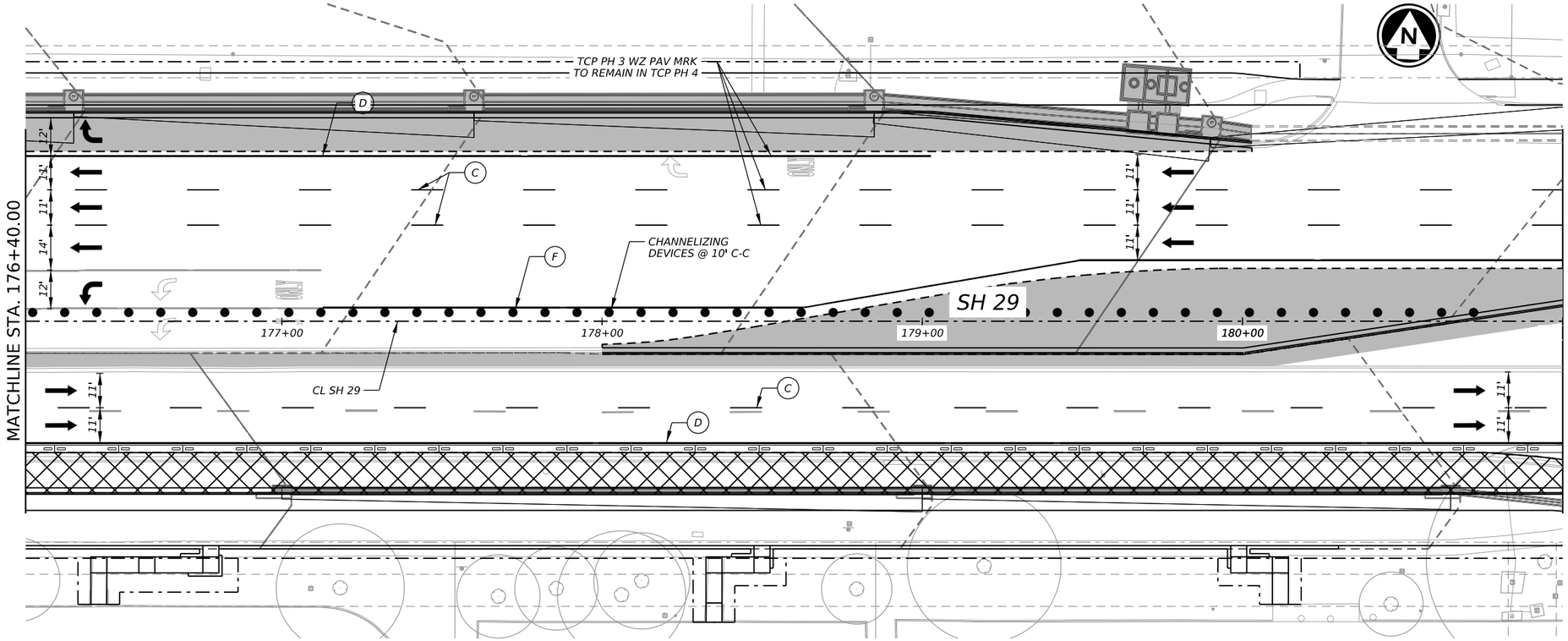

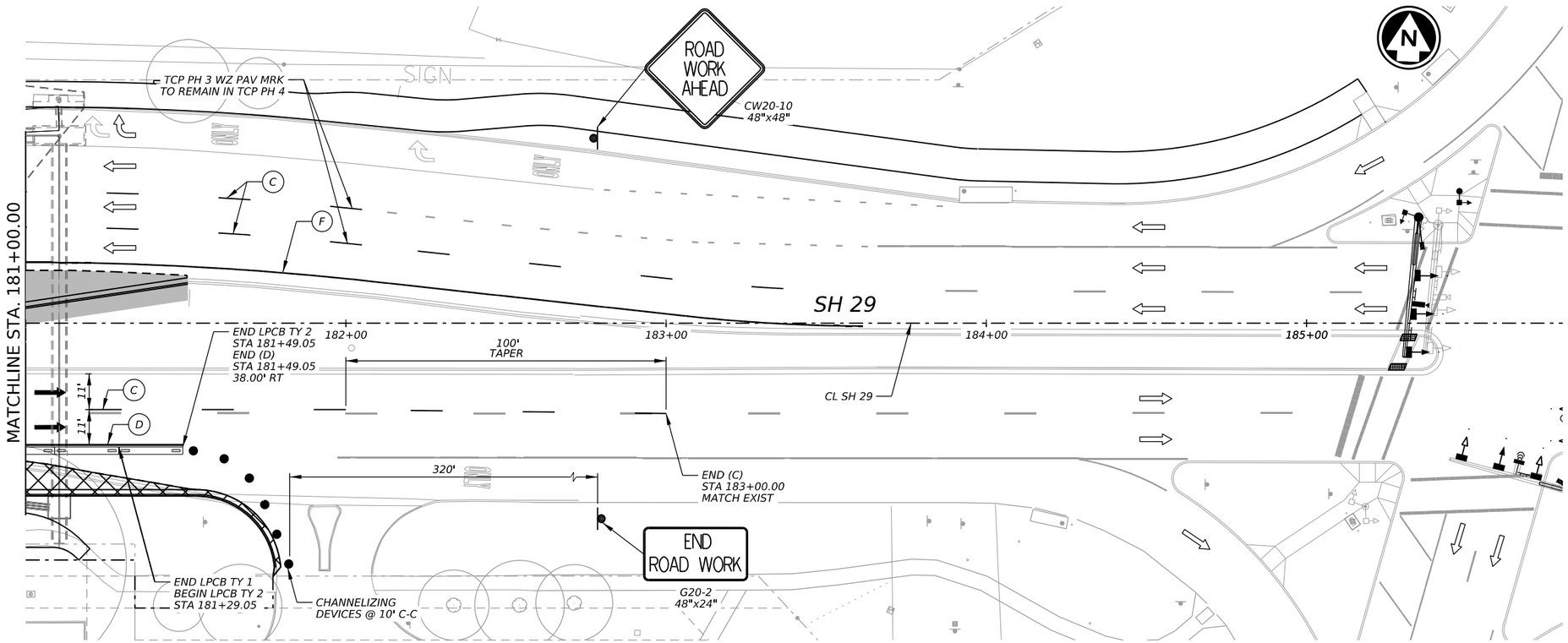

LEGEND

●	CHANNELIZING DEVICES
→	TRAFFIC FLOW INSIDE WORK ZONE
◎	WORK ZONE SIGN POST
	CONSTRUCTION THIS PHASE
	BORED LOCATION
	CONSTRUCTION PREVIOUS PHASE
A	WK ZN PAV MRK REMOVABLE (W) 6" (BRK)
B	WK ZN PAV MRK REMOVABLE (W) 6" (SLD)
C	WK ZN PAV MRK NON-REMOVABLE (W) 6" (BRK)
D	WK ZN PAV MRK NON-REMOVABLE (W) 6" (SLD)
E	WK ZN PAV MRK REMOVABLE (Y) 6" (SLD)
F	WK ZN PAV MRK NON-REMOVABLE (Y) 6" (SLD)
G	WK ZN PAV MRK REMOVABLE (W) 6" (DOT)
H	WK ZN PAV MRK NON-REMOVABLE (W) 24" (SLD)
I	WK ZN PAV MRK REMOVABLE (W) 24" (SLD)

NOTES:
1. CONTRACTOR TO PHASE CONSTRUCT AND UTILIZE EXISTING RAMPS TO MAINTAIN PEDESTRIAN CROSSING. SEE TCP NARRATIVE FOR ADDITIONAL INFORMATION.
2. CONTRACTOR TO PROVIDE BUSINESS ACCESS SIGNS DURING CONSTRUCTION.

HORIZ. 0' 20' 40'

12/18/2025

STATE OF TEXAS
TYLER G. MITCHELL
139240
LICENSED
PROFESSIONAL ENGINEER

GEORGETOWN
TEXAS
more than welcome

Kimley»Horn
F-928

Texas Department of Transportation

SH 29

TRAFFIC CONTROL
PLAN
PHASE VI

SHEET 4 OF 4

CONT	SECT	JOB	HIGHWAY
0337	01	053	SH 29
DIST		COUNTY	SHEET NO.
AUS		WILLIAMSON	43

DATE: 12/18/2025 1:47:14 PM
FILE: pw://kimleyhorn.com:kh-pw-01/Documents/01 Active Projects/TX-GEO-069284005 - SH 29 Widening/4 - Design/Plan Set/2. TCP/SH29_K_TCP_PH6_04.dgn

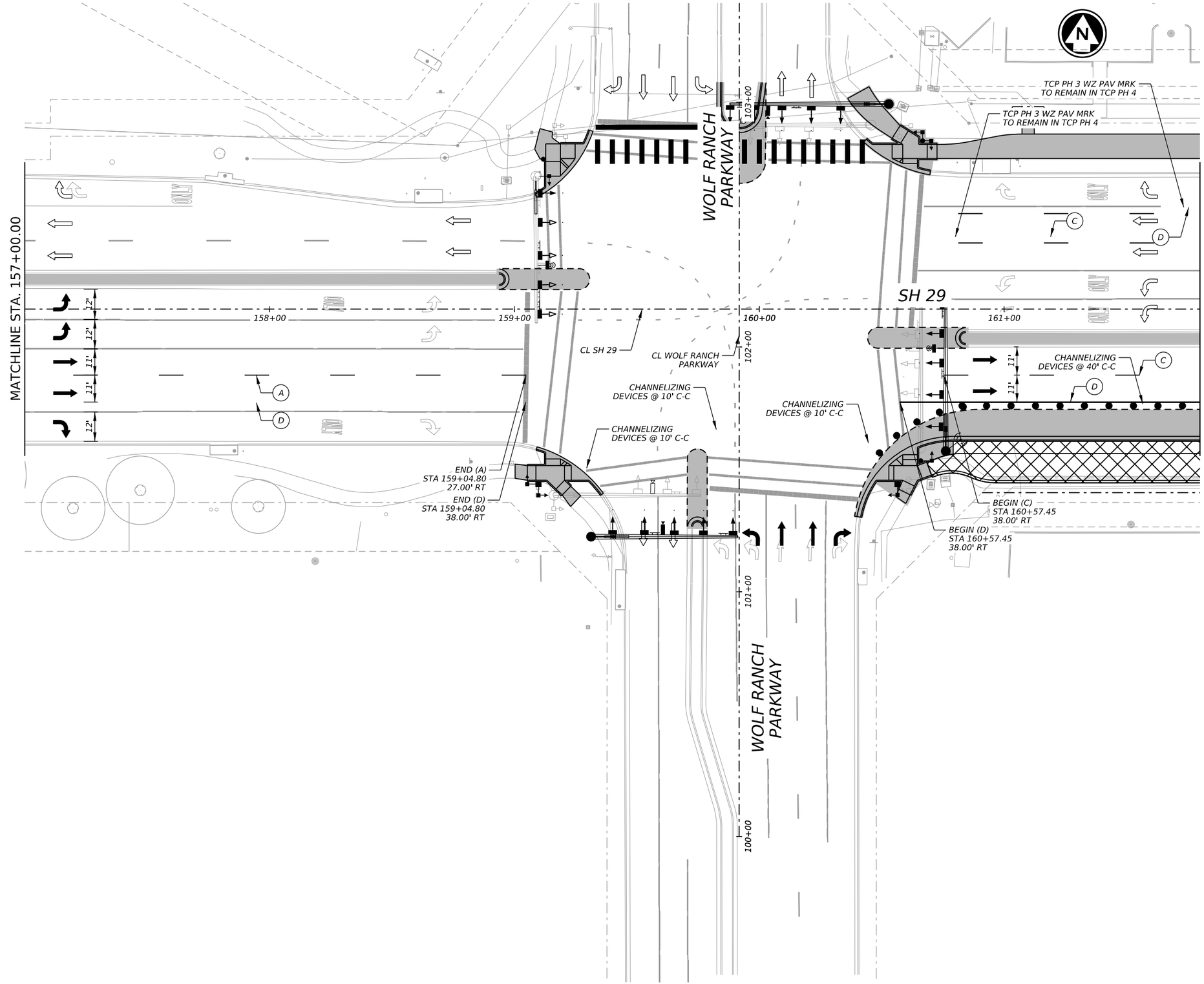

LEGEND

●	CHANNELIZING DEVICES
→	TRAFFIC FLOW INSIDE WORK ZONE
◎	WORK ZONE SIGN POST
	CONSTRUCTION THIS PHASE
	BORED LOCATION
	CONSTRUCTION PREVIOUS PHASE
A	WK ZN PAV MRK REMOVABLE (W) 6" (BRK)
B	WK ZN PAV MRK REMOVABLE (W) 6" (SLD)
C	WK ZN PAV MRK NON-REMOVABLE (W) 6" (BRK)
D	WK ZN PAV MRK NON-REMOVABLE (W) 6" (SLD)
E	WK ZN PAV MRK REMOVABLE (Y) 6" (SLD)
F	WK ZN PAV MRK NON-REMOVABLE (Y) 6" (SLD)
G	WK ZN PAV MRK REMOVABLE (W) 6" (DOT)
H	WK ZN PAV MRK NON-REMOVABLE (W) 24" (SLD)
I	WK ZN PAV MRK REMOVABLE (W) 24" (SLD)

NOTES:
1. CONTRACTOR TO PHASE CONSTRUCT AND UTILIZE EXISTING RAMPS TO MAINTAIN PEDESTRIAN CROSSING. SEE TCP NARRATIVE FOR ADDITIONAL INFORMATION.
2. CONTRACTOR TO PROVIDE BUSINESS ACCESS SIGNS DURING CONSTRUCTION.

HORIZ. 0' 20' 40'

12/18/2025

STATE OF TEXAS
TYLER G. MITCHELL
139240
LICENSED PROFESSIONAL ENGINEER

GEORGETOWN TEXAS
more than welcome

Kimley»Horn F-928

Texas Department of Transportation

SH 29

TRAFFIC CONTROL PLAN PHASE VII

SHEET 1 OF 4

CONT	SECT	JOB	HIGHWAY
0337	01	053	SH 29
DIST		COUNTY	SHEET NO.
AUS		WILLIAMSON	44

DATE: 12/18/2025 1:47:34 PM
FILE: pw:\\KHPW-01\Documents\01 Active Projects\TX-GEO-069284005 - SH 29 Widening\4 - Design\Plan Set\2. TCP\SH29_K_TCP_PH7_01.dgn

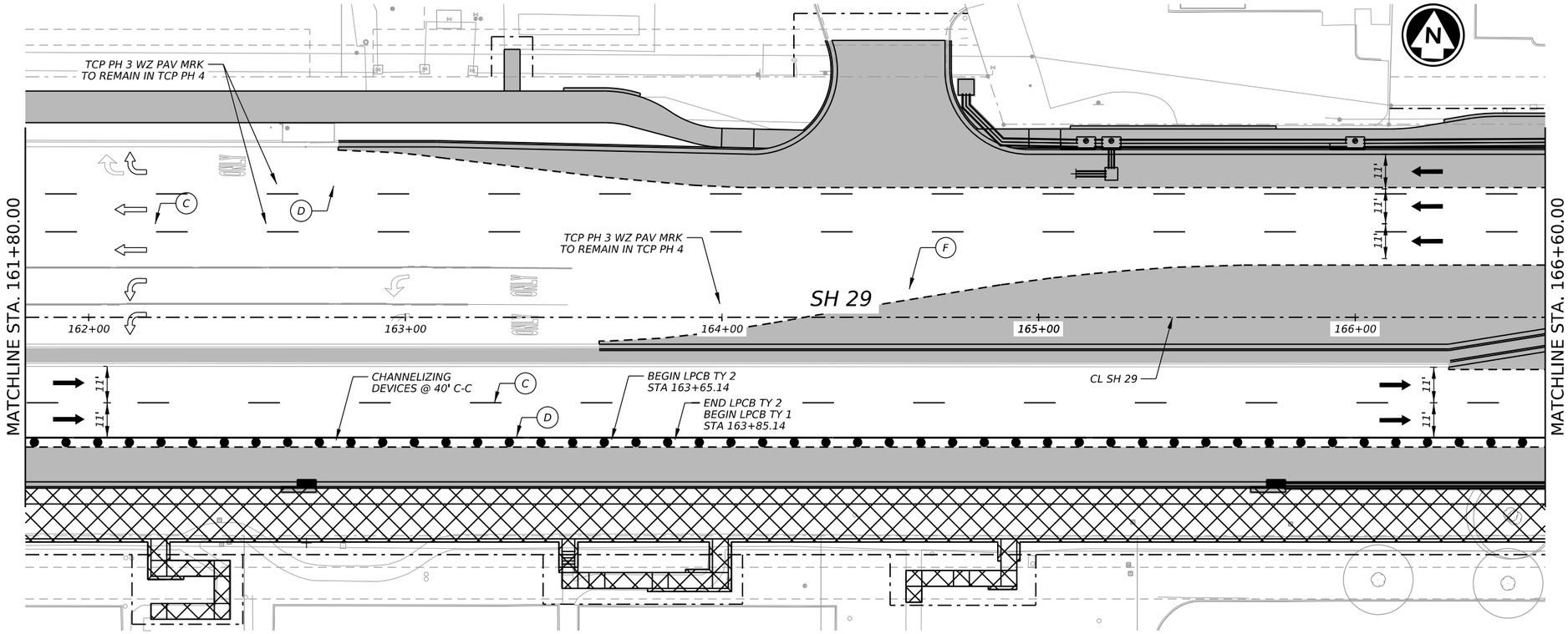

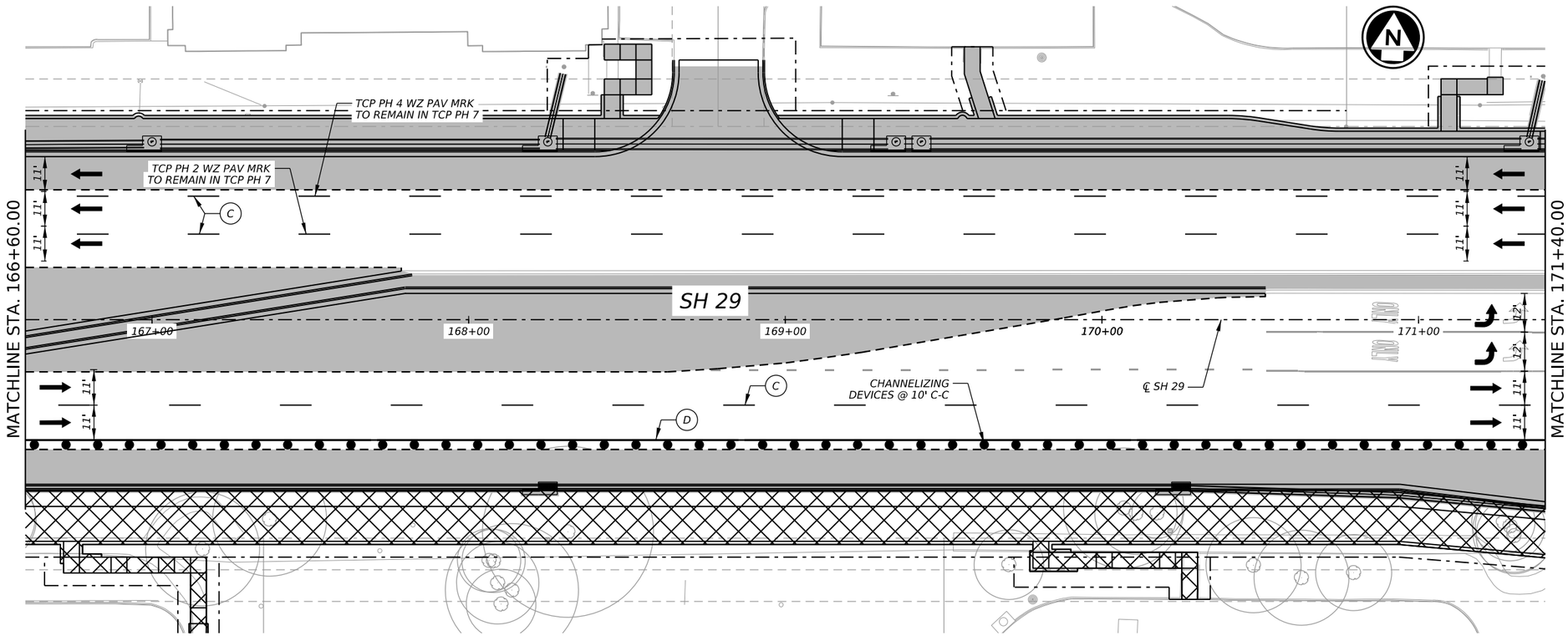

LEGEND

●	CHANNELIZING DEVICES
➡	TRAFFIC FLOW INSIDE WORK ZONE
◎	WORK ZONE SIGN POST
▨	CONSTRUCTION THIS PHASE
▨	BORED LOCATION
▭	CONSTRUCTION PREVIOUS PHASE
Ⓐ	WK ZN PAV MRK REMOVABLE (W) 6" (BRK)
Ⓑ	WK ZN PAV MRK REMOVABLE (W) 6" (SLD)
Ⓒ	WK ZN PAV MRK NON-REMOVABLE (W) 6" (BRK)
Ⓓ	WK ZN PAV MRK NON-REMOVABLE (W) 6" (SLD)
Ⓔ	WK ZN PAV MRK REMOVABLE (Y) 6" (SLD)
Ⓕ	WK ZN PAV MRK NON-REMOVABLE (Y) 6" (SLD)
Ⓖ	WK ZN PAV MRK REMOVABLE (W) 6" (DOT)
Ⓗ	WK ZN PAV MRK NON-REMOVABLE (W) 24" (SLD)
Ⓘ	WK ZN PAV MRK REMOVABLE (W) 24" (SLD)

NOTES:
1. CONTRACTOR TO PHASE CONSTRUCT AND UTILIZE EXISTING RAMPS TO MAINTAIN PEDESTRIAN CROSSING. SEE TCP NARRATIVE FOR ADDITIONAL INFORMATION.
2. CONTRACTOR TO PROVIDE BUSINESS ACCESS SIGNS DURING CONSTRUCTION.

HORIZ. 0' 20' 40'

1/21/2026

TYLER G. MITCHELL
139240
LICENSED
PROFESSIONAL ENGINEER
STATE OF TEXAS

GEORGETOWN
TEXAS
more than welcome

Kimley»Horn
F-928

Texas Department of Transportation

SH 29

TRAFFIC CONTROL PLAN PHASE VII

SHEET 2 OF 4

CONT	SECT	JOB	HIGHWAY
0337	01	053	SH 29
DIST	COUNTY		SHEET NO.
AUS	WILLIAMSON		45

DATE: 1/21/2026 9:33:27 AM
FILE: p:\0337-01-053\Design\Plan Set\2. TCP\SH29_K_TCP_PH7_02.dgn

DW: CK: DW: CK:

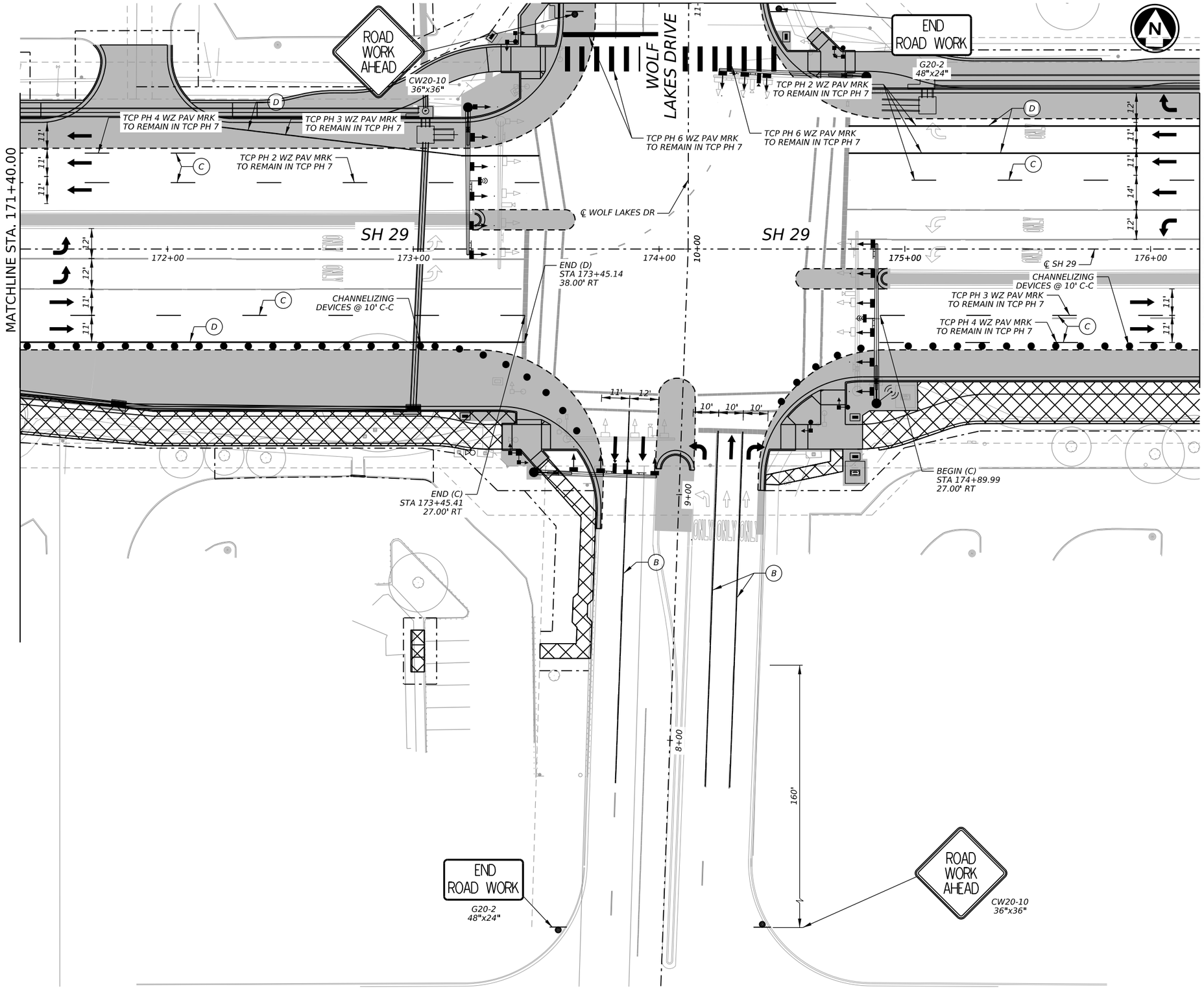

LEGEND

●	CHANNELIZING DEVICES
→	TRAFFIC FLOW INSIDE WORK ZONE
◎	WORK ZONE SIGN POST
	CONSTRUCTION THIS PHASE
	BORED LOCATION
	CONSTRUCTION PREVIOUS PHASE
A	WK ZN PAV MRK REMOVABLE (W) 6" (BRK)
B	WK ZN PAV MRK REMOVABLE (W) 6" (SLD)
C	WK ZN PAV MRK NON-REMOVABLE (W) 6" (BRK)
D	WK ZN PAV MRK NON-REMOVABLE (W) 6" (SLD)
E	WK ZN PAV MRK REMOVABLE (Y) 6" (SLD)
F	WK ZN PAV MRK NON-REMOVABLE (Y) 6" (SLD)
G	WK ZN PAV MRK REMOVABLE (W) 6" (DOT)
H	WK ZN PAV MRK NON-REMOVABLE (W) 24" (SLD)
I	WK ZN PAV MRK REMOVABLE (W) 24" (SLD)

NOTES:
1. CONTRACTOR TO PHASE CONSTRUCT AND UTILIZE EXISTING RAMPS TO MAINTAIN PEDESTRIAN CROSSING. SEE TCP NARRATIVE FOR ADDITIONAL INFORMATION.
2. CONTRACTOR TO PROVIDE BUSINESS ACCESS SIGNS DURING CONSTRUCTION.

HORIZ. 0' 20' 40'

1/21/2026

STATE OF TEXAS
TYLER G. MITCHELL
139240
LICENSED PROFESSIONAL ENGINEER

GEORGETOWN TEXAS
more than welcome

Kimley»Horn F-928

Texas Department of Transportation

SH 29

TRAFFIC CONTROL PLAN PHASE VII

SHEET 3 OF 4

CONT	SECT	JOB	HIGHWAY
0337	01	053	SH 29
DIST		COUNTY	SHEET NO.
AUS		WILLIAMSON	46

DATE: 1/21/2026 9:34:21 AM
FILE: pw://kh-pw-01/Documents/01 Active Projects/TX-GEO-069284005 - SH 29 Widening/4 - Design/Plan Set/2. TCP/SH29_K_TCP_PH7_03.dgn

CK
DW
CK
DW

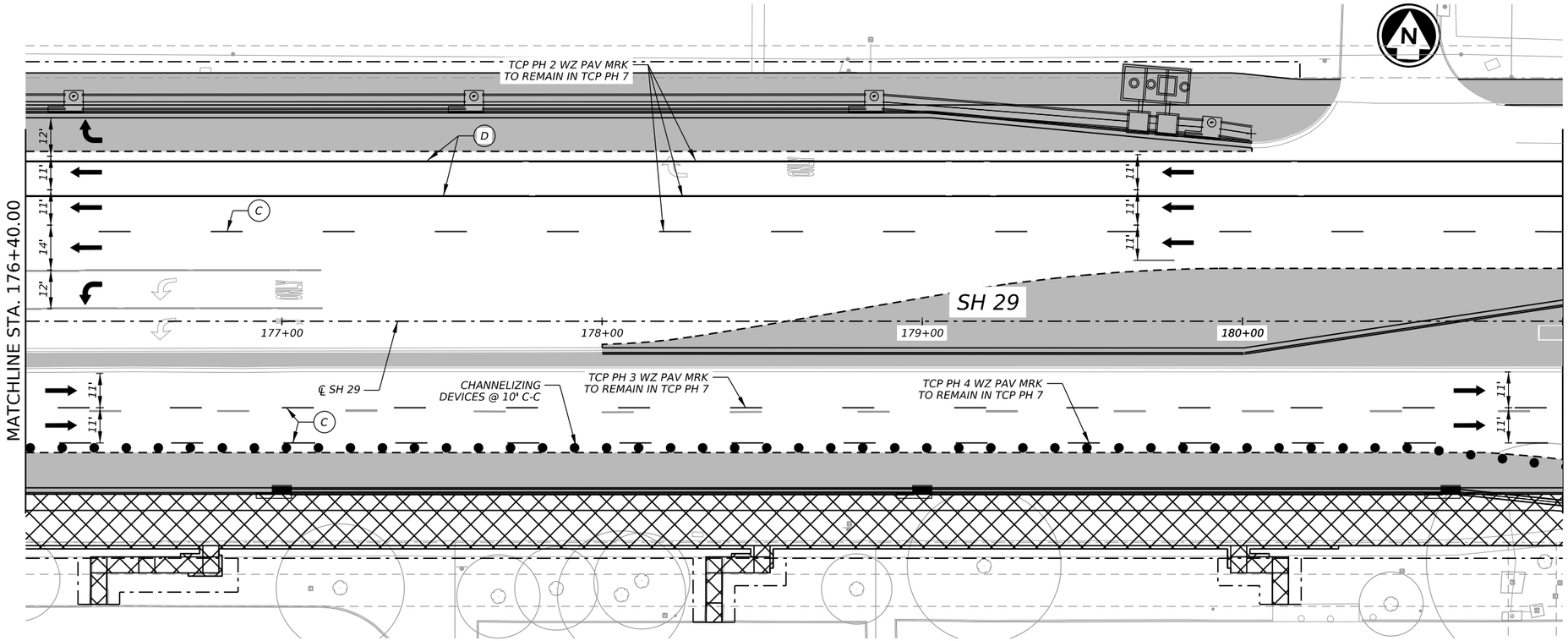

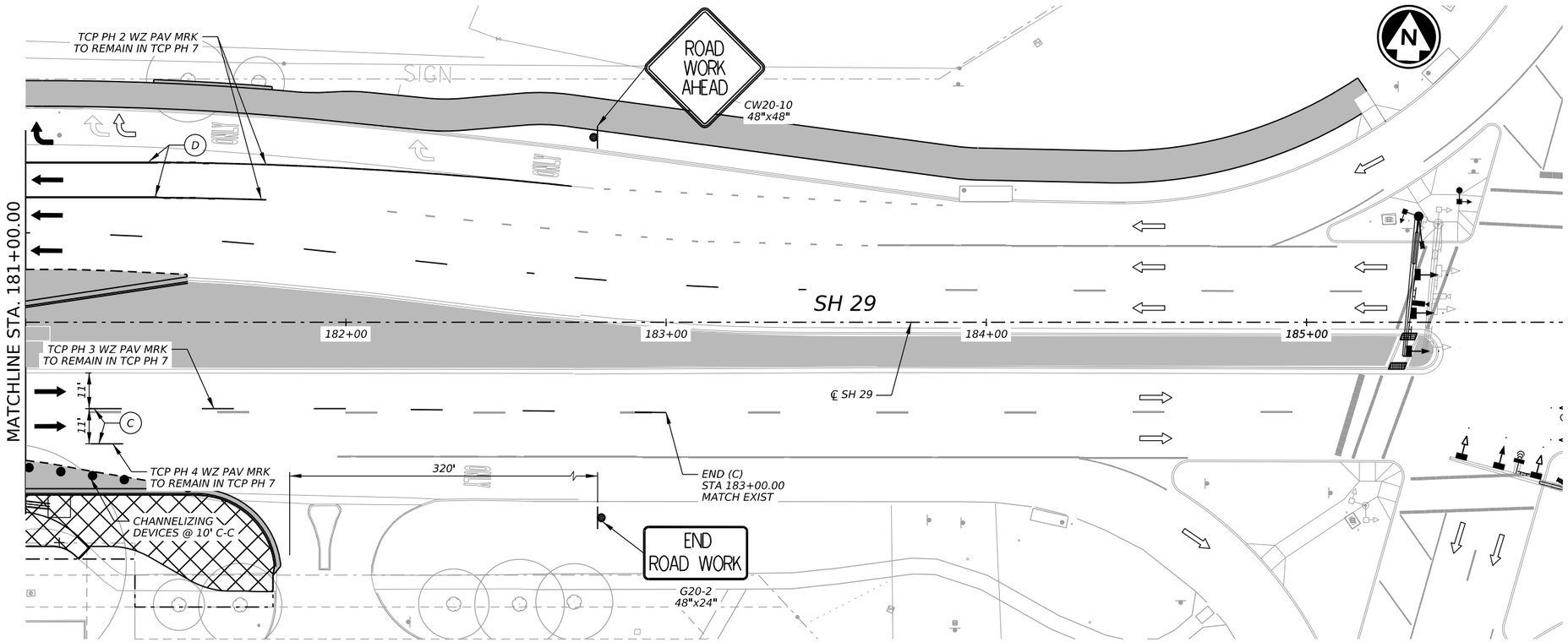

LEGEND

●	CHANNELIZING DEVICES
→	TRAFFIC FLOW INSIDE WORK ZONE
◎	WORK ZONE SIGN POST
▨	CONSTRUCTION THIS PHASE
▨	BORED LOCATION
▭	CONSTRUCTION PREVIOUS PHASE
Ⓐ	WK ZN PAV MRK REMOVABLE (W) 6" (BRK)
Ⓑ	WK ZN PAV MRK REMOVABLE (W) 6" (SLD)
Ⓒ	WK ZN PAV MRK NON-REMOVABLE (W) 6" (BRK)
Ⓓ	WK ZN PAV MRK NON-REMOVABLE (W) 6" (SLD)
Ⓔ	WK ZN PAV MRK REMOVABLE (Y) 6" (SLD)
Ⓕ	WK ZN PAV MRK NON-REMOVABLE (Y) 6" (SLD)
Ⓖ	WK ZN PAV MRK REMOVABLE (W) 6" (DOT)
Ⓗ	WK ZN PAV MRK NON-REMOVABLE (W) 24" (SLD)
Ⓘ	WK ZN PAV MRK REMOVABLE (W) 24" (SLD)

NOTES:
1. CONTRACTOR TO PHASE CONSTRUCT AND UTILIZE EXISTING RAMPS TO MAINTAIN PEDESTRIAN CROSSING. SEE TCP NARRATIVE FOR ADDITIONAL INFORMATION.
2. CONTRACTOR TO PROVIDE BUSINESS ACCESS SIGNS DURING CONSTRUCTION.

HORIZ. 0' 20' 40'

TYLER G. MITCHELL
139240
LICENSED
PROFESSIONAL ENGINEER
STATE OF TEXAS
12/18/2025

GEORGETOWN
TEXAS
more than welcome

Kimley»Horn
F-928

Texas Department of Transportation

SH 29

TRAFFIC CONTROL
PLAN
PHASE VII

SHEET 4 OF 4

CONT	SECT	JOB	HIGHWAY
0337	01	053	SH 29
DIST	COUNTY		SHEET NO.
AUS	WILLIAMSON		47

DATE: 12/18/2025 1:48:34 PM
FILE: pw://kh-pw.bentley.com:kh-pw-01/Documents/01 Active Projects/TX-GEO-069284005 - SH 29 Widening/4 - Design/Plan Set/2. TCP/SH29_K_TCP_PH7_04.dgn

DISCLAIMER:
The use of this standard is governed by the "Texas Engineering Practice Act". No warranty of any kind is made by TxDOT for any purpose whatsoever. TxDOT assumes no responsibility for the conversion of this standard to other formats or for incorrect results or damages resulting from its use.

DATE: 12/18/2025 1:48:54 PM
FILE: pw://kh-pw.bentley.com:kh-pw-01/Documents/01 Active Projects/TX-GEO-06928400S - SH 29 Widening/4 - Design/Plan Set/2. TCP/STANDARDS/bc-21.dgn

BARRICADE AND CONSTRUCTION (BC) STANDARD SHEETS GENERAL NOTES:

1. The Barricade and Construction Standard Sheets (BC sheets) are intended to show typical examples for placement of temporary traffic control devices, construction pavement markings, and typical work zone signs. The information contained in these sheets meet or exceed the requirements shown in the "Texas Manual on Uniform Traffic Control Devices" (TMUTCD).

2. The development and design of the Traffic Control Plan (TCP)is the responsibility of the Engineer.

3. The Contractor may propose changes to the TCP that are signed and sealed by a licensed professional engineer for approval. The Engineer may develop, sign and seal Contractor proposed changes.

4. The Contractor is responsible for installing and maintaining the traffic control devices as shown in the plans. The Contractor may not move or change the approximate location of any device without the approval of the Engineer.

5. Geometric design of lane shifts and detours should, when possible, meet the applicable design criteria contained in manuals such as the American Association of State Highway and Transportation Officials (AASHTO), "A Policy on Geometric Design of Highways and Streets," the TxDOT "Roadway Design Manual" or engineering judgment.

6. When projects abut, the Engineer(s) may omit the END ROAD WORK, TRAFFIC FINES DOUBLE, and other advance warning signs if the signing would be redundant and the work areas appear continuous to the motorists. If the adjacent project is completed first, the Contractor shall erect the necessary warning signs as shown on these sheets, the TCP sheets or as directed by the Engineer. The BEGIN ROAD WORK NEXT X MILES sign shall be revised to show appropriate work zone distance.

7. The Engineer may require duplicate warning signs on the median side of divided highways where median width will permit and traffic volumes justify the signing.

8. All signs shall be constructed in accordance with the details found in the "Standard Highway Sign Designs for Texas," latest edition. Sign details not shown in this manual shall be shown in the plans or the Engineer shall provide a detail to the Contractor before the sign is manufactured.

9. The temporary traffic control devices shown in the illustrations of the BC sheets are examples. As necessary, the Engineer will determine the most appropriate traffic control devices to be used.

10. Where highway construction or maintenance work is being undertaken, other than mobile operations as defined by the Texas Manual on Uniform Traffic Control Devices, CSJ limit signs are required. CSJ limit signs are shown on BC(2). The OBEY WARNING SIGNS STATE LAW sign, STAY ALERT TALK OR TEXT LATER and the WORK ZONE TRAFFIC FINES DOUBLE sign with plaque shall be erected in advance of the CSJ limits. The BEGIN ROAD WORK NEXT X MILES, CONTRACTOR and END ROAD WORK signs shall be erected at or near the CSJ limits. For mobile operations, CSJ limit signs are not required.

11. Traffic control devices should be in place only while work is actually in progress or a definite need exists.

12. The Engineer has the final decision on the location of all traffic control devices.

13. Inactive equipment and work vehicles, including workers' private vehicles must be parked away from travel lanes. They should be as close to the right-of-way line as possible, or located behind a barrier or guardrail, or as approved by the Engineer.

WORKER SAFETY NOTES:

1. Workers on foot who are exposed to traffic or to construction equipment within the right-of-way shall wear high-visibility safety apparel meeting the requirements of ISEA "American National Standard for High-Visibility Apparel," or equivalent revisions, and labeled as ANSI 107-2004 standard performance for Class 2 or 3 risk exposure. Class 3 garments should be considered for high traffic volume work areas or night time work.

2. Except in emergency situations, flagger stations shall be illuminated when flagging is used at night.

COMPLIANT WORKZONE TRAFFIC CONTROL DEVICES

1. Only pre-qualified products shall be used. The "Compliant Work Zone Traffic Control Devices List" (CWZTCD) describes pre-qualified products and their sources.

2. Work zone traffic control devices shall be compliant with the Manual for Assessing safety Hardware (MASH).

THE DOCUMENTS BELOW CAN BE FOUND ON-LINE AT http://www.txdot.gov
COMPLIANT WORK ZONE TRAFFIC CONTROL DEVICES LIST (CWZTCD)
DEPARTMENTAL MATERIAL SPECIFICATIONS (DMS)
MATERIAL PRODUCER LIST (MPL)
ROADWAY DESIGN MANUAL - SEE "MANUALS (ONLINE MANUALS)"
STANDARD HIGHWAY SIGN DESIGNS FOR TEXAS (SHSD)
TEXAS MANUAL ON UNIFORM TRAFFIC CONTROL DEVICES (TMUTCD)
TRAFFIC ENGINEERING STANDARD SHEETS

SHEET 1 OF 12

Texas Department of Transportation | Traffic Safety Division Standard

BARRICADE AND CONSTRUCTION GENERAL NOTES AND REQUIREMENTS

BC(1)-21

FILE: bc-21.dgn	DN: TxDOT	CK: TxDOT	DW: TxDOT	CK: TxDOT
©TxDOT November 2002	CONT	SECT	JOB	HIGHWAY
REVISIONS 4-03 7-13 9-07 8-14 5-10 5-21	0337	01	053	SH 29
	DIST	COUNTY		SHEET NO.
	AUS	WILLIAMSON		48

DISCLAIMER:
The use of this standard is governed by the "Texas Engineering Practice Act". No warranty of any kind is made by TxDOT for any purpose whatsoever. TxDOT assumes no responsibility for the conversion of this standard to other formats or for incorrect results or damages resulting from its use.

DATE: 12/18/2025 1:48:54 PM
FILE: pw://kn-pw.bentley.com:kn-pw-01/Documents/01 Active Projects/TX-GEO-069284005 - SH 29 Widening/4 - Design/Plan Set/2. TCP/ST ANDARDS/bc-21.dgn

TYPICAL LOCATION OF CROSSROAD SIGNS

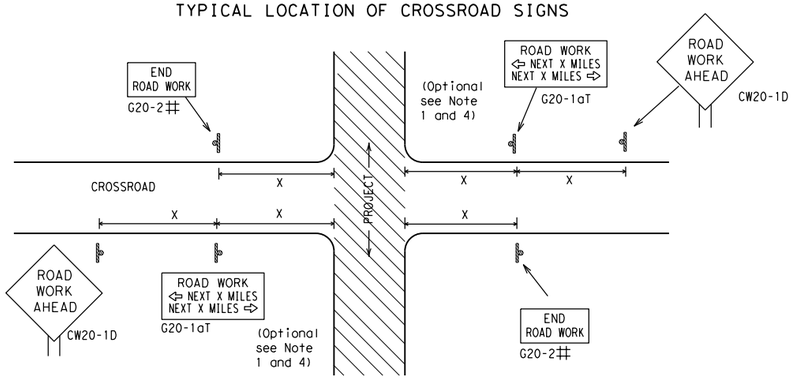

WORK AREAS IN MULTIPLE LOCATIONS WITHIN CSJ LIMITS

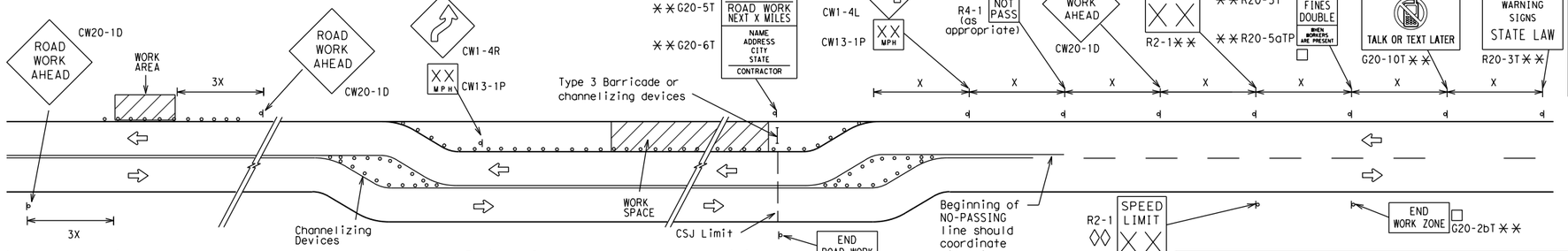

When extended distances occur between minimal work spaces, the Engineer/Inspector should ensure additional "ROAD WORK AHEAD"(CW20-1D)signs are placed in advance of these work areas to remind drivers they are still within the project limits. See the applicable TCP sheets for exact location and spacing of signs and channelizing devices.

SAMPLE LAYOUT OF SIGNING FOR WORK BEGINNING DOWNSTREAM OF THE CSJ LIMITS

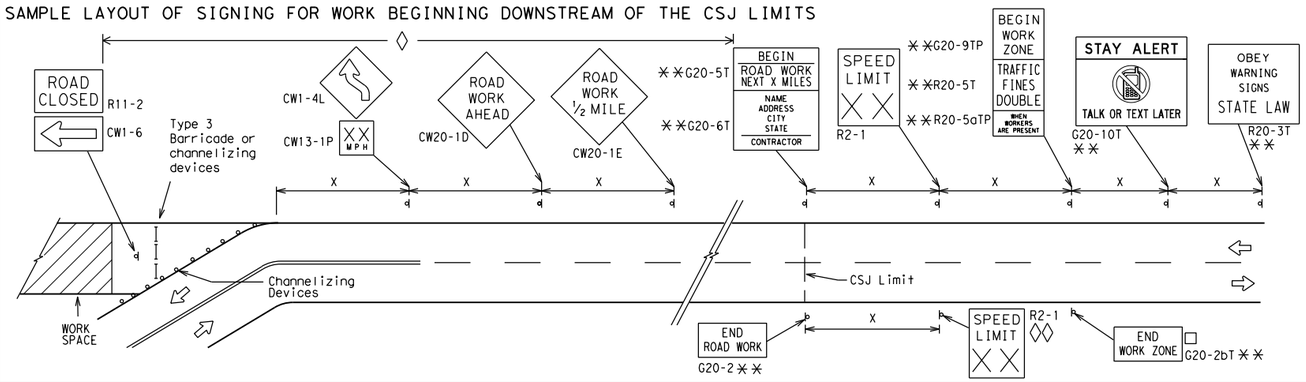

T-INTERSECTION

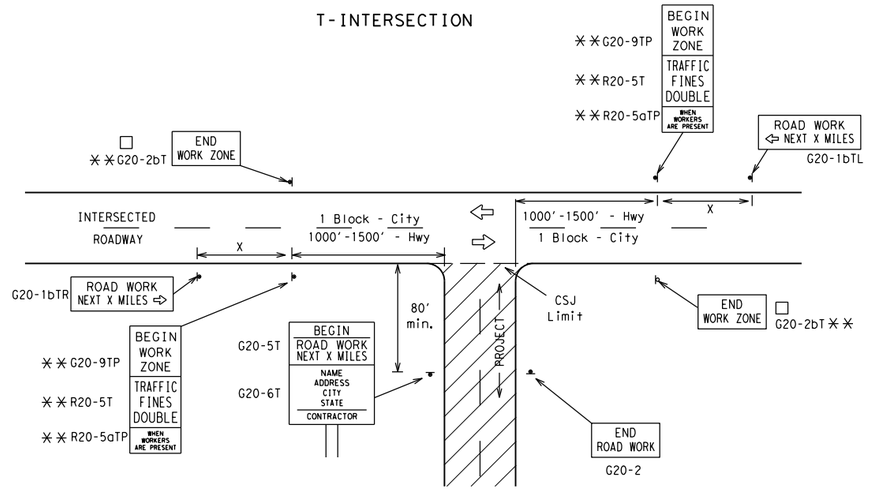

CSJ LIMITS AT T-INTERSECTION

1. The Engineer will determine the types and location of any additional traffic control devices, such as a flagger and accompanying signs, or other signs, that should be used when work is being performed at or near an intersection.

2. If construction closes the road at a T-intersection, the Contractor shall place the "CONTRACTOR NAME"(G20-6T) sign behind the Type 3 Barricades for the road closure (see BC(10) also). The "ROAD WORK NEXT X MILES" left arrow(G20-1bTL) and "ROAD WORK NEXT X MILES" right arrow (G20-1bTR)" signs shall be replaced by the detour signing called for in the plans.

TYPICAL CONSTRUCTION WARNING SIGN SIZE AND SPACING[1,5,6]

SIZE

Sign Number or Series	Conventional Road	Expressway/ Freeway
CW20[4] CW21 CW22 CW23 CW25	48" x 48"	48" x 48"
CW1, CW2, CW7, CW8, CW9, CW11, CW14	36" x 36"	48" x 48"
CW3, CW4, CW5, CW6, CW8-3, CW10, CW12	48" x 48"	48" x 48"

SPACING

Posted Speed	Sign △ Spacing "X"
MPH	Feet (Apprx.)
30	120
35	160
40	240
45	320
50	400
55	500[2]
60	600[2]
65	700[2]
70	800[2]
75	900[2]
80	1000[2]
*	*[3]

* For typical sign spacings on divided highways, expressways and freeways, see Part 6 of the "Texas Manual on Uniform Traffic Control Devices" (TMUTCD) typical application diagrams or TCP Standard Sheets.

△ Minimum distance from work area to first Advance Warning sign nearest the work area and/or distance between each additional sign.

GENERAL NOTES

1. Special or larger size signs may be used as necessary.

2. Distance between signs should be increased as required to have 1500 feet advance warning.

3. Distance between signs should be increased as required to have 1/2 mile or more advance warning.

4. 36" x 36" "ROAD WORK AHEAD" (CW20-1D)signs may be used on low volume crossroads at the discretion of the Engineer as per TMUTCD Part 5. See Note 2 under "Typical Location of Crossroad Signs".

5. Only diamond shaped warning sign sizes are indicated.

6. See sign size listing in "TMUTCD", Sign Appendix or the "Standard Highway Sign Designs for Texas" manual for complete list of available sign design sizes.

NOTES

The Contractor shall determine the appropriate distance to be placed on the G20-1 series signs and "BEGIN ROAD WORK NEXT X MILES"(G20-5T)sign for each specific project. This distance shall replace the "X" and shall be rounded to the nearest whole mile with the approval of the Engineer. No decimals shall be used.

□ The "BEGIN WORK ZONE"(G20-9TP) and "END WORK ZONE" (G20-2bT) shall be used as shown on the sample layout when advance signs are required outside the CSJ Limits. They inform the motorist of entering or leaving a part of the work zone lying outside the CSJ Limits where traffic fines may double if workers are present.

** CSJ limit signing is required for highway construction and maintenance work, with the exception of mobile operations.

◊ Area for placement of "ROAD WORK AHEAD" (CW20-1D)sign and other signs or devices as called for on the Traffic Control Plan.

◊◊ Contractor will install a regulatory speed limit sign at the end of the work zone.

LEGEND	
⊢⊣	Type 3 Barricade
○ ○ ○	Channelizing Devices
▬	Sign
X	See Typical Construction Warning Sign Size and Spacing chart or the TMUTCD for sign spacing requirements.

Texas Department of Transportation

Traffic Safety Division Standard

BARRICADE AND CONSTRUCTION PROJECT LIMIT

BC(2)-21

FILE: bc-21.dgn	DN: TxDOT	CK: TxDOT	DW: TxDOT	CK: TxDOT
©TxDOT November 2002	CONT	SECT	JOB	HIGHWAY
REVISIONS	0337	01	053	SH 29
9-07 8-14	DIST	COUNTY		SHEET NO.
7-13 5-21	AUS	WILLIAMSON		49

DISCLAIMER:
The use of this standard is governed by the "Texas Engineering Practice Act". No warranty of any kind is made by TxDOT for any purpose whatsoever. TxDOT assumes no responsibility for the conversion of this standard to other formats or for incorrect results or damages resulting from its use.

DATE: 12/18/2025 1:48:55 PM
FILE: pw://kh-pw.bentley.com:kh-pw-01/Documents/01 Active Projects/TX-GEO-0692840005 - SH 29 Widening/4 - Design/Plan Set/2. TCP/STANDARDS/bc-21.dgn

TYPICAL APPLICATION OF WORK ZONE SPEED LIMIT SIGNS

Work zone speed limits shall be regulatory, established in accordance with the "Procedures for Establishing Speed Zones," and approved by the Texas Transportation Commission, or by City Ordinance when within Incorporated City Limits.

Reduced speeds should only be posted in the vicinity of work activity and not throughout the entire project.

Regulatory work zone speed signs (R2-1) shall be removed or covered during periods when they are not needed.

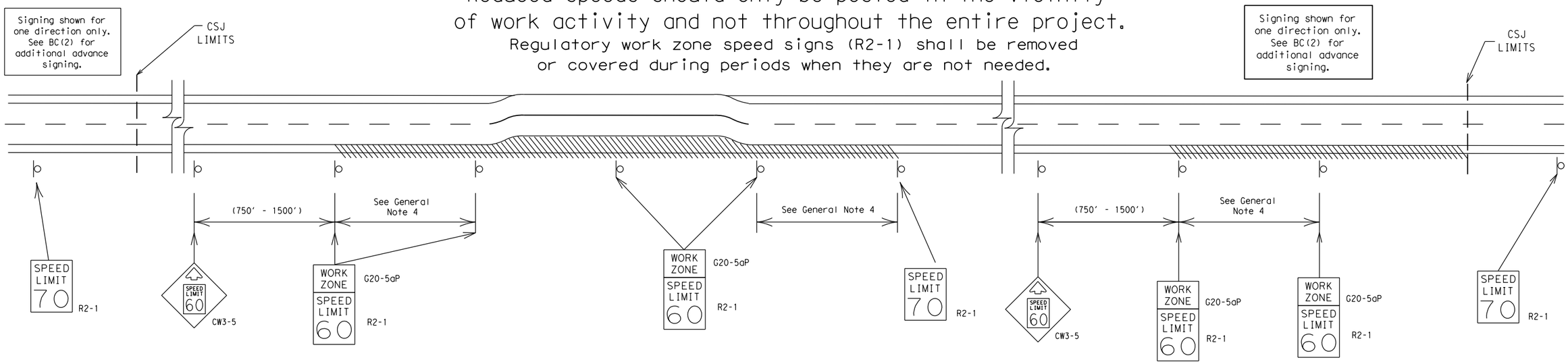

GUIDANCE FOR USE:

LONG/INTERMEDIATE TERM WORK ZONE SPEED LIMITS

This type of work zone speed limit should be included on the design of the traffic control plans when restricted geometrics with a lower design speed are present in the work zone and modification of the geometrics to a higher design speed is not feasible.

Long/Intermediate Term Work Zone Speed Limit signs, when approved as described above, should be posted and visible to the motorist when work activity is present. Work activity may also be defined as a change in the roadway that requires a reduced speed for motorists to safely negotiate the work area, including:

a) rough road or damaged pavement surface
b) substantial alteration of roadway geometrics (diversions)
c) construction detours
d) grade
e) width
f) other conditions readily apparent to the driver

As long as any of these conditions exist, the work zone speed limit signs should remain in place.

SHORT TERM WORK ZONE SPEED LIMITS

This type of work zone speed limit may be included on the design of the traffic control plans when workers or equipment are not behind concrete barrier, when work activity is within 10 feet of the traveled way or actually in the traveled way.

Short Term Work Zone Speed Limit signs should be posted and visible to the motorists only when work activity is present. When work activity is not present, signs shall be removed or covered.
(See Removing or Covering on BC(4)).

GENERAL NOTES

1. Regulatory work zone speed limits should be used only for sections of construction projects where speed control is of major importance.
2. Regulatory work zone speed limit signs shall be placed on supports at a 7 foot minimum mounting height.
3. Speed zone signs are illustrated for one direction of travel and are normally posted for each direction of travel.
4. Frequency of work zone speed limit signs should be:
   40 mph and greater 0.2 to 2 miles
   35 mph and less 0.2 to 1 mile
5. Regulatory speed limit signs shall have black legend and border on a white reflective background (See "Reflective Sheeting" on BC(4)).
6. Fabrication, erection and maintenance of the"ADVANCE SPEED LIMIT"(CW3-5)sign, "WORK ZONE"(G20-5aP) plaque and the "SPEED LIMIT"(R2-1)signs shall not be paid for directly, but shall be considered subsidiary to Item 502.
7. Turning signs from view, laying signs over or down will not be allowed, unless as otherwise noted under "REMOVING OR COVERING" on BC(4).
8. Techniques that may help reduce traffic speeds include but are not limited to:
   A. Law enforcement.
   B. Flagger stationed next to sign.
   C. Portable changeable message sign (PCMS).
   D. Low-power (drone) radar transmitter.
   E. Speed monitor trailers or signs.
9. Speeds shown on details above are for illustration only. Work Zone Speed Limits should only be posted as approved for each project.
10. For more specific guidance concerning the type of work, work zone conditions and factors impacting allowable regulatory construction speed zone reduction see TxDOT form #1204 in the TxDOT e-form system.

Texas Department of Transportation

Traffic Safety Division Standard

BARRICADE AND CONSTRUCTION WORK ZONE SPEED LIMIT

BC(3)-21

FILE: bc-21.dgn	DN: TxDOT	CK: TxDOT	DW: TxDOT	CK: TxDOT
©TxDOT November 2002	CONT	SECT	JOB	HIGHWAY
REVISIONS	0337	01	053	SH 29
9-07 8-14	DIST	COUNTY		SHEET NO.
7-13 5-21	AUS	WILLIAMSON		50

DISCLAIMER:
The use of this standard is governed by the "Texas Engineering Practice Act". No warranty of any kind is made by TxDOT for any purpose whatsoever. TxDOT assumes no responsibility for the conversion of this standard to other formats or for incorrect results or damages resulting from its use.

DATE: 12/18/2025 1:48:56 PM
FILE: pw://kh-pw.bentley.com:kh-pw-01/Documents/01 Active Projects/TX-GEO-069284005 - SH 29 Widening/4 - Design/Plan Set/2. TCP/STANDARDS/bc-21.dgn

TYPICAL MINIMUM CLEARANCES FOR LONG TERM AND INTERMEDIATE TERM SIGNS

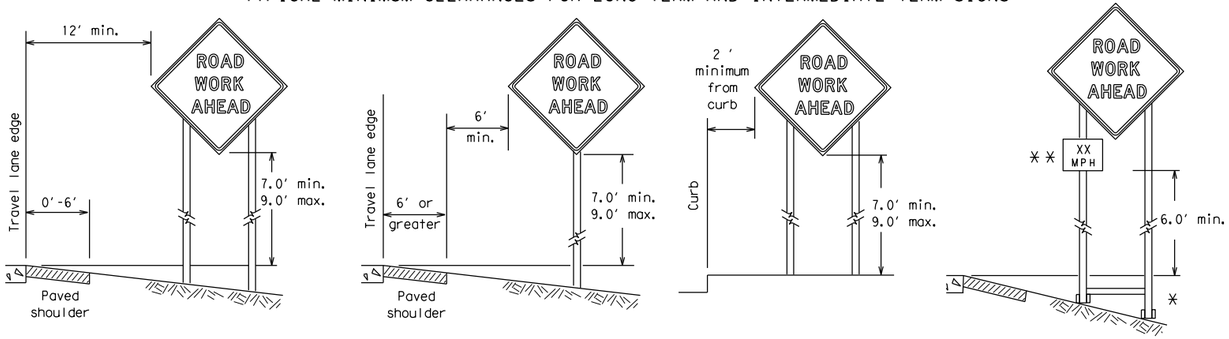

⁎ When placing skid supports on unlevel ground, the leg post lengths must be adjusted so the sign appears straight and plumb. Objects shall NOT be placed under skids as a means of leveling.

⁎⁎ When plaques are placed on dual-leg supports, they should be attached to the upright nearest the travel lane. Supplemental plaques (advisory or distance) should not cover the surface of the parent sign.

ATTACHMENT FOR SIGN SUPPORTS

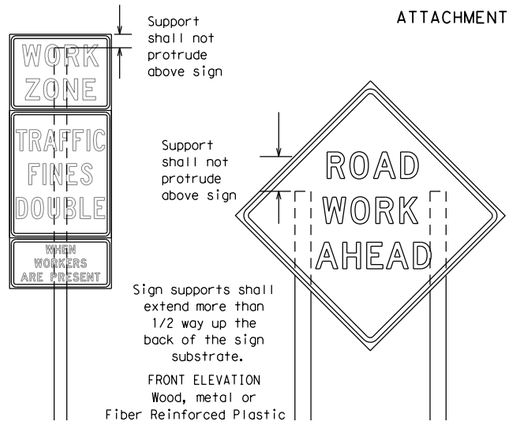

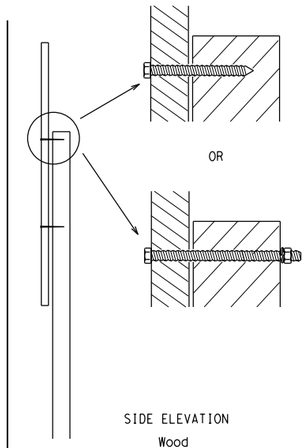

Attachment to wooden supports will be by bolts and nuts or screws. Use TxDOT's or manufacturer's recommended procedures for attaching sign substrates to other types of sign supports

Nails shall NOT be allowed. Each sign shall be attached directly to the sign support. Multiple signs shall not be joined or spliced by any means. Wood supports shall not be extended or repaired by splicing or other means.

Splicing embedded perforated square metal tubing in order to extend post height will only be allowed when the splice is made using four bolts, two above and two below the spice point. Splice must be located entirely behind the sign substrate, not near the base of the support. Splice insert lengths should be at least 5 times nominal post size, centered on the splice and of at least the same gauge material.

STOP/SLOW PADDLES

1. STOP/SLOW paddles are the primary method to control traffic by flaggers. The STOP/SLOW paddle size should be 24" x 24".
2. STOP/SLOW paddles shall be retroreflectorized when used at night.
3. STOP/SLOW paddles may be attached to a staff with a minimum length of 6′ to the bottom of the sign.
4. Any lights incorporated into the STOP or SLOW paddle faces shall only be as specifically described in Section 6E.03 Hand Signaling Devices in the TMUTCD.

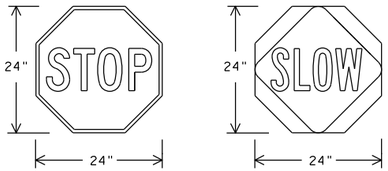

SHEETING REQUIREMENTS (WHEN USED AT NIGHT)		
USAGE	COLOR	SIGN FACE MATERIAL
BACKGROUND	RED	TYPE B OR C SHEETING
BACKGROUND	ORANGE	TYPE B_{FL} OR C_{FL} SHEETING
LEGEND & BORDER	WHITE	TYPE B OR C SHEETING
LEGEND & BORDER	BLACK	ACRYLIC NON-REFLECTIVE FILM

CONTRACTOR REQUIREMENTS FOR MAINTAINING PERMANENT SIGNS WITHIN THE PROJECT LIMITS

1. Permanent signs are used to give notice of traffic laws or regulations, call attention to conditions that are potentially hazardous to traffic operations, show route designations, destinations, directions, distances, services, points of interest, and other geographical, recreational, specific service (LOGO), or cultural information. Drivers proceeding through a work zone need the same, if not better route guidance as normally installed on a roadway without construction.
2. When permanent regulatory or warning signs conflict with work zone conditions, remove or cover the permanent signs until the permanent sign message matches the roadway condition. For details for covering large guide signs see the TS-CD standard.
3. When existing permanent signs are moved and relocated due to construction purposes, they shall be visible to motorists at all times.
4. If existing signs are to be relocated on their original supports, they shall be installed on crashworthy bases as shown on the SMD Standard sheets. The signs shall meet the required mounting heights shown on the BC Sheets or the SMD Standards. This work should be paid for under the appropriate pay item for relocating existing signs.
5. If permanent signs are to be removed and relocated using temporary supports, the Contractor shall use crashworthy supports as shown on the BC standard sheets, TLRS standard sheets or the CWZTCD list. The signs shall meet the required mounting heights shown on the BC, or the SMD standard sheets during construction. This work should be paid for under the appropriate pay item for relocating existing signs.
6. Any sign or traffic control device that is struck or damaged by the Contractor or his/her construction equipment shall be replaced as soon as possible by the Contractor to ensure proper guidance for the motorists. This will be subsidiary to Item 502.

GENERAL NOTES FOR WORK ZONE SIGNS

1. Contractor shall install and maintain signs in a straight and plumb condition and/or as directed by the Engineer.
2. Wooden sign posts shall be painted white.
3. Barricades shall NOT be used as sign supports.
4. All signs shall be installed in accordance with the plans or as directed by the Engineer. Signs shall be used to regulate, warn, and guide the traveling public safely through the work zone.
5. The Contractor may furnish either the sign design shown in the plans or in the "Standard Highway Sign Designs for Texas" (SHSD). The Engineer/Inspector may require the Contractor to furnish other work zone signs that are shown in the TMUTCD but may have been omitted from the plans. Any variation in the plans shall be documented by written agreement between the Engineer and the Contractor's Responsible Person. All changes must be documented in writing before being implemented. This can include documenting the changes in the Inspector's TxDOT diary and having both the Inspector and Contractor initial and date the agreed upon changes.
6. The Contractor shall furnish sign supports listed in the "Compliant Work Zone Traffic Control Device List" (CWZTCD) for small roadside signs. Supports for temporary large roadside signs shall meet the requirements detailed on the Temporary Large Roadside Signs (TLRS) standard sheets.The Contractor shall install the sign support in accordance with the manufacturer's recommendations. If there is a question regarding installation procedures, the Contractor shall furnish the Engineer a copy of the manufacturer's installation recommendations so the Engineer can verify the correct procedures are being followed.
7. The Contractor is responsible for installing signs on approved supports and replacing signs with damaged or cracked substrates and/or damaged or marred reflective sheeting as directed by the Engineer/Inspector.
8. Identification markings may be shown only on the back of the sign substrate. The maximum height of letters and/or company logos used for identification shall be 1 inch.
9. The Contractor shall replace damaged wood posts. New or damaged wood sign posts shall not be spliced.

DURATION OF WORK (as defined by the "Texas Manual on Uniform Traffic Control Devices" Part 6)

1. The types of sign supports, sign mounting height,the size of signs, and the type of sign substrates can vary based on the type of work being performed. The Engineer is responsible for selecting the appropriate size sign for the type of work being performed. The Contractor is responsible for ensuring the sign support, sign mounting height and substrate meets manufacturer's recommendations in regard to crashworthiness and duration of work requirements.
   a. Long-term stationary - work that occupies a location more than 3 days.
   b. Intermediate-term stationary - work that occupies a location more than one daylight period up to 3 days, or nighttime work lasting more than one hour.
   c. Short-term stationary - daytime work that occupies a location for more than 1 hour in a single daylight period.
   d. Short, duration - work that occupies a location up to 1 hour.
   e. Mobile - work that moves continuously or intermittently (stopping for up to approximately 15 minutes.)

SIGN MOUNTING HEIGHT

1. The bottom of Long-term/Intermediate-term signs shall be at least 7 feet, but not more than 9 feet, above the paved surface, except as shown for supplemental plaques mounted below other signs.
2. The bottom of Short-term/Short Duration signs shall be a minimum of 1 foot above the pavement surface but no more than 2 feet above the ground.
3. Long-term/Intermediate-term Signs may be used in lieu of Short-term/Short Duration signing.
4. Short-term/Short Duration signs shall be used only during daylight and shall be removed at the end of the workday or raised to appropriate Long-term/Intermediate sign height.
5. Regulatory signs shall be mounted at least 7 feet, but not more than 9 feet, above the paved surface regardless of work duration.

SIZE OF SIGNS

1. The Contractor shall furnish the sign sizes shown on BC (2) unless otherwise shown in the plans or as directed by the Engineer.

SIGN SUBSTRATES

1. The Contractor shall ensure the sign substrate is installed in accordance with the manufacturer's recommendations for the type of sign support that is being used. The CWZTCD lists each substrate that can be used on the different types and models of sign supports.
2. "Mesh" type materials are NOT an approved sign substrate, regardless of the tightness of the weave.
3. All wooden individual sign panels fabricated from 2 or more pieces shall have one or more plywood cleat, 1/2" thick by 6" wide, fastened to the back of the sign and extending fully across the sign. The cleat shall be attached to the back of the sign using wood screws that do not penetrate the face of the sign panel. The screws shall be placed on both sides of the splice and spaced at 6" centers. The Engineer may approve other methods of splicing the sign face.

REFLECTIVE SHEETING

1. All signs shall be retroreflective and constructed of sheeting meeting the color and retro-reflectivity requirements of DMS-8300 for rigid signs or DMS-8310 for roll-up signs. The web address for DMS specifications is shown on BC(1).
2. White sheeting, meeting the requirements of DMS-8300 Type A, shall be used for signs with a white background.
3. Orange sheeting, meeting the requirements of DMS-8300 Type B_{FL} or Type C_{FL}, shall be used for rigid signs with orange backgrounds.

SIGN LETTERS

1. All sign letters and numbers shall be clear, and open rounded type uppercase alphabet letters as approved by the Federal Highway Administration (FHWA) and as published in the "Standard Highway Sign Design for Texas" manual. Signs, letters and numbers shall be of first class workmanship in accordance with Department Standards and Specifications.

REMOVING OR COVERING

1. When sign messages may be confusing or do not apply, the signs shall be removed or completely covered.
2. Long-term stationary or intermediate stationary signs installed on square metal tubing may be turned away from traffic 90 degrees when the sign message is not applicable. This technique may not be used for signs installed in the median of divided highways or near any intersections where the sign may be seen from approaching traffic.
3. Signs installed on wooden skids shall not be turned at 90 degree angles to the roadway. These signs should be removed or completely covered when not required.
4. When signs are covered, the material used shall be opaque, such as heavy mil black plastic, or other materials which will cover the entire sign face and maintain their opaque properties under automobile headlights at night, without damaging the sign sheeting.
5. Burlap shall NOT be used to cover signs.
6. Duct tape or other adhesive material shall NOT be affixed to a sign face.
7. Signs and anchor stubs shall be removed and holes backfilled upon completion of work.

SIGN SUPPORT WEIGHTS

1. Where sign supports require the use of weights to keep from turning over, the use of sandbags with dry, cohesionless sand should be used.
2. The sandbags will be tied shut to keep the sand from spilling and to maintain a constant weight.
3. Rock, concrete, iron, steel or other solid objects shall not be permitted for use as sign support weights.
4. Sandbags should weigh a minimum of 35 lbs and a maximum of 50 lbs.
5. Sandbags shall be made of a durable material that tears upon vehicular impact. Rubber (such as tire inner tubes) shall NOT be used.
6. Rubber ballasts designed for channelizing devices should not be used for ballast on portable sign supports. Sign supports designed and manufactured with rubber bases may be used when shown on the CWZTCD list.
7. Sandbags shall only be placed along or laid over the base supports of the traffic control device and shall not be suspended above ground level or hung with rope, wire, chains or other fasteners. Sandbags shall be placed along the length of the skids to weigh down the sign support.
8. Sandbags shall NOT be placed under the skid and shall not be used to level sign supports placed on slopes.

FLAGS ON SIGNS

1. Flags may be used to draw attention to warning signs. When used, the flag shall be 16 inches square or larger and shall be orange or fluorescent red-orange in color. Flags shall not be allowed to cover any portion of the sign face.

Texas Department of Transportation — Traffic Safety Division Standard

BARRICADE AND CONSTRUCTION TEMPORARY SIGN NOTES

BC(4)-21

FILE: bc-21.dgn	DN: TxDOT	CK: TxDOT	DW: TxDOT	CK: TxDOT
©TxDOT November 2002	CONT	SECT	JOB	HIGHWAY
REVISIONS	0337	01	053	SH 29
9-07 8-14	DIST	COUNTY		SHEET NO.
7-13 5-21	AUS	WILLIAMSON		51

DISCLAIMER:
The use of this standard is governed by the "Texas Engineering Practice Act". No warranty of any kind is made by TxDOT for any purpose whatsoever. TxDOT assumes no responsibility for the conversion of this standard to other formats or for incorrect results or damages resulting from its use.

DATE: 12/18/2025 1:48:56 PM
FILE: pw://kh-pw.bentley.com:kh-pw-01/Documents/01 Active Projects/TX-GEO-069284005 - SH 29 Widening/4 - Design/Plan Set/2. TCP/STANDARDS/bc-21.dgn

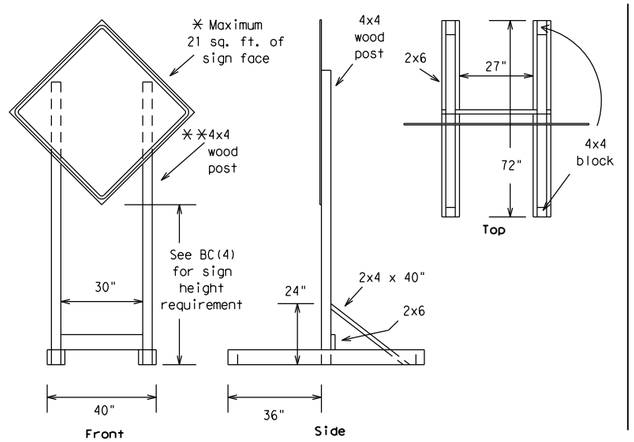

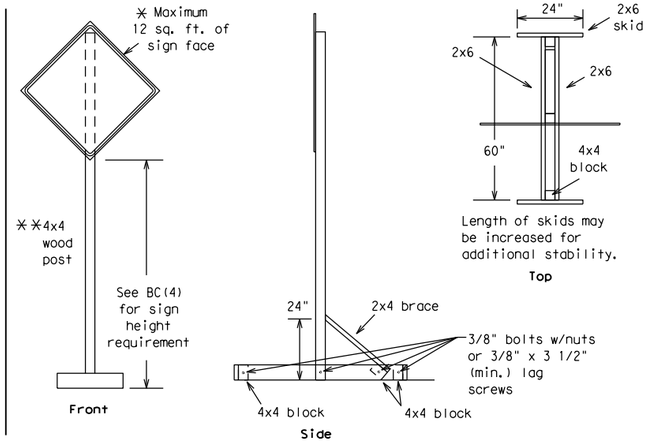

SKID MOUNTED WOOD SIGN SUPPORTS

* LONG/INTERMEDIATE TERM STATIONARY - PORTABLE SKID MOUNTED SIGN SUPPORTS

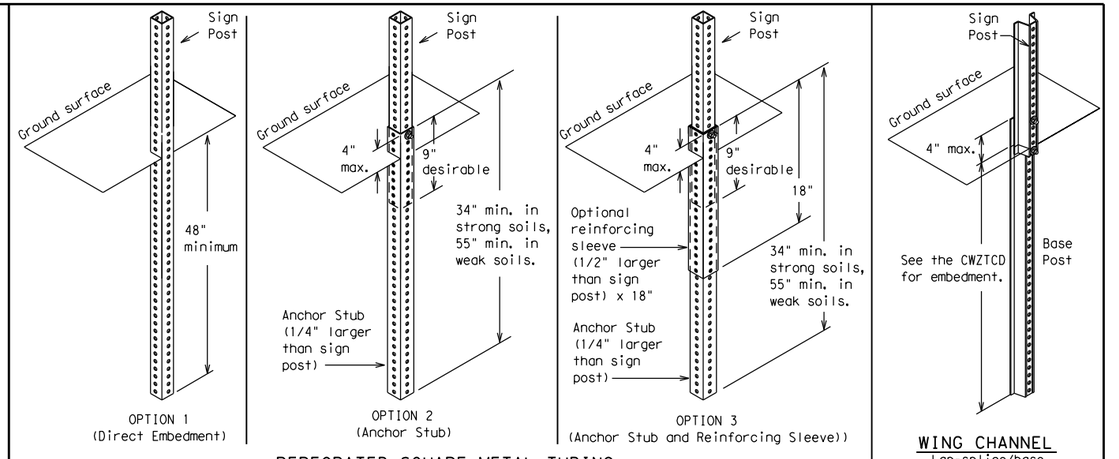

GROUND MOUNTED SIGN SUPPORTS

Refer to the CWZTCD and the manufacturer's installation procedure for each type sign support.
The maximum sign square footage shall adhere to the manufacturer's recommendation.
Two post installations can be used for larger signs.

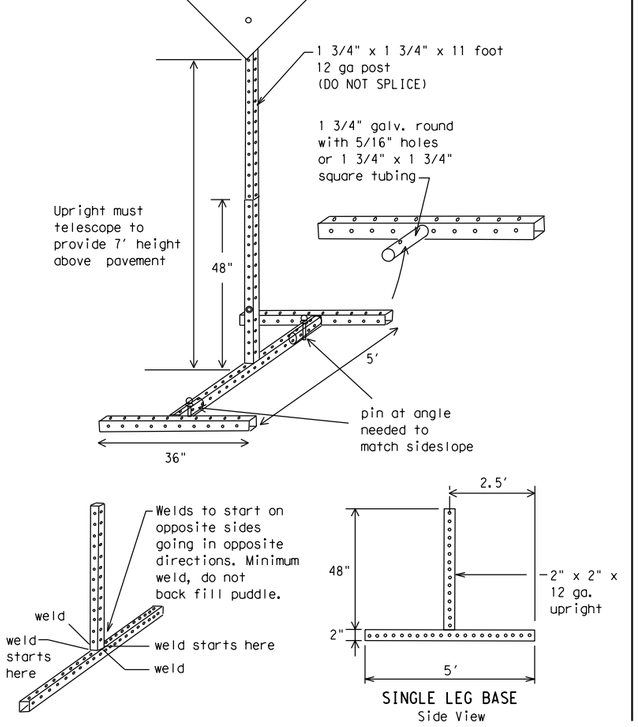

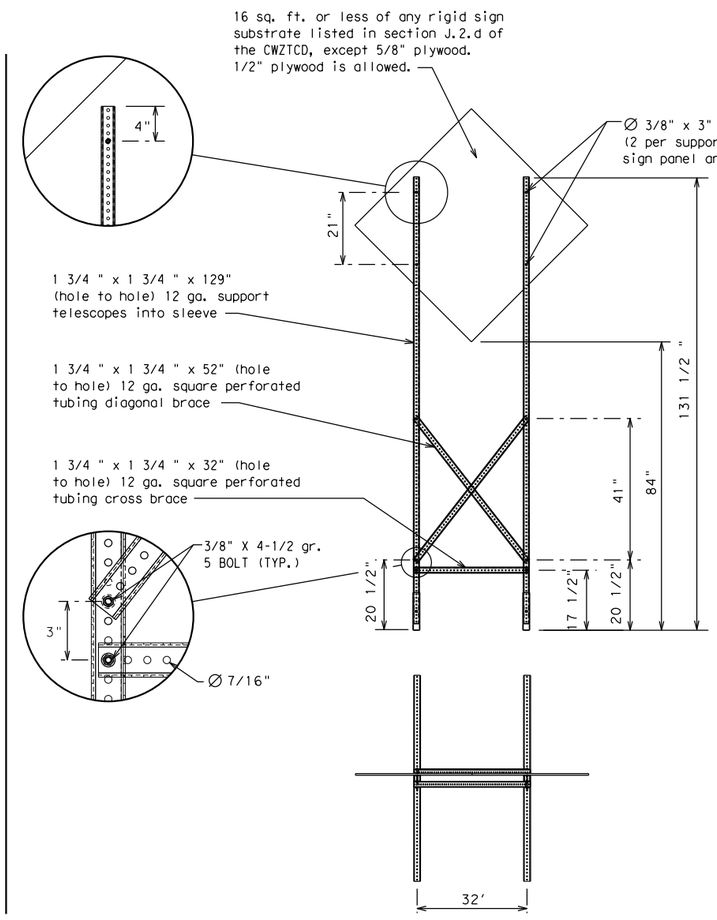

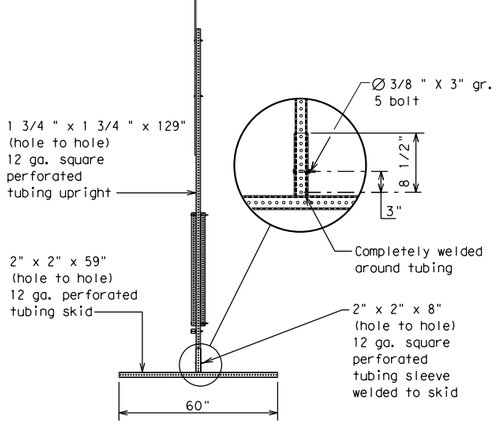

SKID MOUNTED PERFORATED SQUARE STEEL TUBING SIGN SUPPORTS

* LONG/INTERMEDIATE TERM STATIONARY - PORTABLE SKID MOUNTED SIGN SUPPORTS

WEDGE ANCHORS

Both steel and plastic Wedge Anchor Systems as shown on the SMD Standard Sheets may be used as temporary sign supports for signs up to 10 square feet of sign face. They may be set in concrete or in sturdy soils if approved by the Engineer. (See web address for "Traffic Engineering Standard Sheets" on BC(1)).

OTHER DESIGNS

MORE DETAILS OF APPROVED LONG/INTERMEDIATE AND SHORT TERM SUPPORTS CAN BE FOUND ON THE CWZTCD LIST. SEE BC(1) FOR WEBSITE LOCATION.

GENERAL NOTES

1. Nails may be used in the assembly of wooden sign supports, but 3/8" bolts with nuts or 3/8" x 3 1/2" lag screws must be used on every joint for final connection.
2. No more than 2 sign posts shall be placed within a 7 ft. circle, except for specific materials noted on the CWZTCD List.
3. When project is completed, all sign supports and foundations shall be removed from the project site. This will be considered subsidiary to Item 502.

* See BC(4) for definition of "Work Duration."

** Wood sign posts MUST be one piece. Splicing will NOT be allowed. Posts shall be painted white.

☐ See the CWZTCD for the type of sign substrate that can be used for each approved sign support.

Texas Department of Transportation

Traffic Safety Division Standard

BARRICADE AND CONSTRUCTION TYPICAL SIGN SUPPORT

BC(5)-21

FILE: bc-21.dgn	DN: TxDOT	CK: TxDOT	DW: TxDOT	CK: TxDOT
©TxDOT November 2002	CONT	SECT	JOB	HIGHWAY
REVISIONS	0337	01	053	SH 29
9-07 8-14	DIST	COUNTY		SHEET NO.
7-13 5-21	AUS	WILLIAMSON		52

DISCLAIMER:
The use of this standard is governed by the "Texas Engineering Practice Act". No warranty of any kind is made by TxDOT for any purpose whatsoever. TxDOT assumes no responsibility for the conversion of this standard to other formats or for incorrect results or damages resulting from its use.

DATE: 12/18/2025 1:48:57 PM
FILE: pw://kh-pw.bentley.com:kh-pw-01/Documents/01 Active Projects/TX-GEO-069284005 - SH 29 Widening/4 - Design/Plan Set/2. TCP/STANDARDS/bc-21.dgn

WHEN NOT IN USE, REMOVE THE PCMS FROM THE RIGHT-OF-WAY OR PLACE THE PCMS BEHIND BARRIER OR GUARDRAIL WITH SIGN PANEL TURNED PARALLEL TO TRAFFIC

PORTABLE CHANGEABLE MESSAGE SIGNS

1. The Engineer/Inspector shall approve all messages used on portable changeable message signs (PCMS).
2. Messages on PCMS should contain no more than 8 words (about four to eight characters per word), not including simple words such as "TO," "FOR," "AT," etc.
3. Messages should consist of a single phase, or two phases that alternate. Three-phase messages are not allowed. Each phase of the message should convey a single thought, and must be understood by itself.
4. Use the word "EXIT" to refer to an exit ramp on a freeway; i.e., "EXIT CLOSED." Do not use the term "RAMP."
5. Always use the route or interstate designation (IH, US, SH, FM) along with the number when referring to a roadway.
6. When in use, the bottom of a stationary PCMS message panel should be a minimum 7 feet above the roadway, where possible.
7. The message term "WEEKEND" should be used only if the work is to start on Saturday morning and end by Sunday evening at midnight. Actual days and hours of work should be displayed on the PCMS if work is to begin on Friday evening and/or continue into Monday morning.
8. The Engineer/Inspector may select one of two options which are available for displaying a two-phase message on a PCMS. Each phase may be displayed for either four seconds each or for three seconds each.
9. Do not "flash" messages or words included in a message. The message should be steady burn or continuous while displayed.
10. Do not present redundant information on a two-phase message; i.e., keeping two lines of the message the same and changing the third line.
11. Do not use the word "Danger" in message.
12. Do not display the message "LANES SHIFT LEFT" or "LANES SHIFT RIGHT" on a PCMS. Drivers do not understand the message.
13. Do not display messages that scroll horizontally or vertically across the face of the sign.
14. The following table lists abbreviated words and two-word phrases that are acceptable for use on a PCMS. Both words in a phrase must be displayed together. Words or phrases not on this list should not be abbreviated, unless shown in the TMUTCD.
15. PCMS character height should be at least 18 inches for trailer mounted units. They should be visible from at least 1/2 (.5) mile and the text should be legible from at least 600 feet at night and 800 feet in daylight. Truck mounted units must have a character height of 10 inches and must be legible from at least 400 feet.
16. Each line of text should be centered on the message board rather than left or right justified.
17. If disabled, the PCMS should default to an illegible display that will not alarm motorists and will only be used to alert workers that the PCMS has malfunctioned. A pattern such as a series of horizontal solid bars is appropriate.

WORD OR PHRASE	ABBREVIATION
Access Road	ACCS RD
Alternate	ALT
Avenue	AVE
Best Route	BEST RTE
Boulevard	BLVD
Bridge	BRDG
Cannot	CANT
Center	CTR
Construction Ahead	CONST AHD
CROSSING	XING
Detour Route	DETOUR RTE
Do Not	DONT
East	E
Eastbound	(route) E
Emergency	EMER
Emergency Vehicle	EMER VEH
Entrance, Enter	ENT
Express Lane	EXP LN
Expressway	EXPWY
XXXX Feet	XXXX FT
Fog Ahead	FOG AHD
Freeway	FRWY, FWY
Freeway Blocked	FWY BLKD
Friday	FRI
Hazardous Driving	HAZ DRIVING
Hazardous Material	HAZMAT
High-Occupancy	HOV
Vehicle Highway	HWY
Hour(s)	HR, HRS
Information	INFO
It Is	ITS
Junction	JCT
Left	LFT
Left Lane	LFT LN
Lane Closed	LN CLOSED
Lower Level	LWR LEVEL
Maintenance	MAINT

WORD OR PHRASE	ABBREVIATION
Major	MAJ
Miles	MI
Miles Per Hour	MPH
Minor	MNR
Monday	MON
Normal	NORM
North	N
Northbound	(route) N
Parking	PKING
Road	RD
Right Lane	RT LN
Saturday	SAT
Service Road	SERV RD
Shoulder	SHLDR
Slippery	SLIP
South	S
Southbound	(route) S
Speed	SPD
Street	ST
Sunday	SUN
Telephone	PHONE
Temporary	TEMP
Thursday	THURS
To Downtown	TO DWNTN
Traffic	TRAF
Travelers	TRVLRS
Tuesday	TUES
Time Minutes	TIME MIN
Upper Level	UPR LEVEL
Vehicles (s)	VEH, VEHS
Warning	WARN
Wednesday	WED
Weight Limit	WT LIMIT
West	W
Westbound	(route) W
Wet Pavement	WET PVMT
Will Not	WONT

Roadway designation ≠ IH-number, US-number, SH-number, FM-number

RECOMMENDED PHASES AND FORMATS FOR PCMS MESSAGES DURING ROADWORK ACTIVITIES

(The Engineer may approve other messages not specifically covered here.)

Phase 1: Condition Lists

Road/Lane/Ramp Closure List

- FREEWAY CLOSED X MILE
- FRONTAGE ROAD CLOSED
- ROAD CLOSED AT SH XXX
- SHOULDER CLOSED XXX FT
- ROAD CLSD AT FM XXXX
- RIGHT LN CLOSED XXX FT
- RIGHT X LANES CLOSED
- RIGHT X LANES OPEN
- CENTER LANE CLOSED
- DAYTIME LANE CLOSURES
- NIGHT LANE CLOSURES
- I-XX SOUTH EXIT CLOSED
- VARIOUS LANES CLOSED
- EXIT XXX CLOSED X MILE
- EXIT CLOSED
- RIGHT LN TO BE CLOSED
- MALL DRIVEWAY CLOSED
- X LANES CLOSED TUE - FRI
- XXXXXXXX BLVD CLOSED

Other Condition List

- ROADWORK XXX FT
- ROAD REPAIRS XXXX FT
- FLAGGER XXXX FT
- LANE NARROWS XXXX FT
- RIGHT LN NARROWS XXXX FT
- TWO-WAY TRAFFIC XX MILE
- MERGING TRAFFIC XXXX FT
- CONST TRAFFIC XXX FT
- LOOSE GRAVEL XXXX FT
- UNEVEN LANES XXXX FT
- DETOUR X MILE
- ROUGH ROAD XXXX FT
- ROADWORK PAST SH XXXX
- ROADWORK NEXT FRI-SUN
- BUMP XXXX FT
- US XXX EXIT X MILES
- TRAFFIC SIGNAL XXXX FT
- LANES SHIFT *

* LANES SHIFT in Phase 1 must be used with STAY IN LANE in Phase 2.

Phase 2: Possible Component Lists

Action to Take/Effect on Travel List

- MERGE RIGHT
- FORM X LINES RIGHT
- DETOUR NEXT X EXITS
- USE XXXXX RD EXIT
- USE EXIT XXX
- USE EXIT I-XX NORTH
- STAY ON US XXX SOUTH
- USE I-XX E TO I-XX N
- TRUCKS USE US XXX N
- WATCH FOR TRUCKS
- WATCH FOR TRUCKS
- EXPECT DELAYS
- EXPECT DELAYS
- PREPARE TO STOP
- REDUCE SPEED XXX FT
- END SHOULDER USE
- USE OTHER ROUTES
- WATCH FOR WORKERS
- STAY IN LANE *

Location List

- AT FM XXXX
- BEFORE RAILROAD CROSSING
- NEXT X MILES
- PAST US XXX EXIT
- XXXXXXX TO XXXXXXX
- US XXX TO FM XXXX

Warning List

- SPEED LIMIT XX MPH
- MAXIMUM SPEED XX MPH
- MINIMUM SPEED XX MPH
- ADVISORY SPEED XX MPH
- RIGHT LANE EXIT
- USE CAUTION
- DRIVE SAFELY
- DRIVE WITH CARE

** Advance Notice List

- TUE-FRI XX AM- X PM
- APR XX-XX X PM-X AM
- BEGINS MONDAY
- BEGINS MAY XX
- MAY X-X XX PM - XX AM
- NEXT FRI-SUN
- XX AM TO XX PM
- NEXT TUE AUG XX
- TONIGHT XX PM- XX AM

* LANES SHIFT in Phase 1 must be used with STAY IN LANE in Phase 2.

** See Application Guidelines Note 6.

APPLICATION GUIDELINES

1. Only 1 or 2 phases are to be used on a PCMS.
2. The 1st phase (or both) should be selected from the "Road/Lane/Ramp Closure List" and the "Other Condition List".
3. A 2nd phase can be selected from the "Action to Take/Effect on Travel, Location, General Warning, or Advance Notice Phase Lists".
4. A Location Phase is necessary only if a distance or location is not included in the first phase selected.
5. If two PCMS are used in sequence, they must be separated by a minimum of 1000 ft. Each PCMS shall be limited to two phases, and should be understandable by themselves.
6. For advance notice, when the current date is within seven days of the actual work date, calendar days should be replaced with days of the week. Advance notification should typically be for no more than one week prior to the work.

WORDING ALTERNATIVES

1. The words RIGHT, LEFT and ALL can be interchanged as appropriate.
2. Roadway designations IH, US, SH, FM and LP can be interchanged as appropriate.
3. EAST, WEST, NORTH and SOUTH (or abbreviations E, W, N and S) can be interchanged as appropriate.
4. Highway names and numbers replaced as appropriate.
5. ROAD, HIGHWAY and FREEWAY can be interchanged as needed.
6. AHEAD may be used instead of distances if necessary.
7. FT and MI, MILE and MILES interchanged as appropriate.
8. AT, BEFORE and PAST interchanged as needed.
9. Distances or AHEAD can be eliminated from the message if a location phase is used.

PCMS SIGNS WITHIN THE R.O.W. SHALL BE BEHIND GUARDRAIL OR CONCRETE BARRIER OR SHALL HAVE A MINIMUM OF FOUR (4) PLASTIC DRUMS PLACED PERPENDICULAR TO TRAFFIC ON THE UPSTREAM SIDE OF THE PCMS, WHEN EXPOSED TO ONE DIRECTION OF TRAFFIC. WHEN EXPOSED TO TWO WAY TRAFFIC, THE FOUR DRUMS SHOULD BE PLACED WITH ONE DRUM AT EACH OF THE FOUR CORNERS OF THE UNIT.

FULL MATRIX PCMS SIGNS

1. When Full Matrix PCMS signs are used, the character height and legibility/visibility requirements shall be maintained as listed in Note 15 under "PORTABLE CHANGEABLE MESSAGE SIGNS" above.
2. When symbol signs, such as the "Flagger Symbol"(CW20-7) are represented graphically on the Full Matrix PCMS sign and, with the approval of the Engineer, it shall maintain the legibility/visibility requirement listed above.
3. When symbol signs are represented graphically on the Full Matrix PCMS, they shall only supplement the use of the static sign represented, and shall not substitute for, or replace that sign.
4. A full matrix PCMS may be used to simulate a flashing arrow board provided it meets the visibility, flash rate and dimming requirements on BC(7), for the same size arrow.

Texas Department of Transportation

Traffic Safety Division Standard

BARRICADE AND CONSTRUCTION PORTABLE CHANGEABLE MESSAGE SIGN (PCMS)

BC(6)-21

FILE: bc-21.dgn	DN: TxDOT	CK: TxDOT	DW: TxDOT	CK: TxDOT
©TxDOT November 2002	CONT	SECT	JOB	HIGHWAY
REVISIONS	0337	01	053	SH 29
9-07 8-14	DIST	COUNTY		SHEET NO.
7-13 5-21	AUS	WILLIAMSON		53

100

DISCLAIMER:
The use of this standard is governed by the "Texas Engineering Practice Act". No warranty of any kind is made by TxDOT for any purpose whatsoever. TxDOT assumes no responsibility for the conversion of this standard to other formats or for incorrect results or damages resulting from its use.

DATE: 12/18/2025 1:48:57 PM
FILE: pw://KH-pw.bentley.com:kh-pw-01/Documents/01 Active Projects/TX-GEO-069284005 - SH 29 Widening/4 - Design/Plan Set/2. TCP/STANDARDS/bc-21.dgn

1. Barrier Reflectors shall be pre-qualified, and conform to the color and reflectivity requirements of DMS-8600. A list of prequalified Barrier Reflectors can be found at the Material Producer List web address shown on BC(1).
2. Color of Barrier Reflectors shall be as specified in the TMUTCD. The cost of the reflectors shall be considered subsidiary to Item 512.

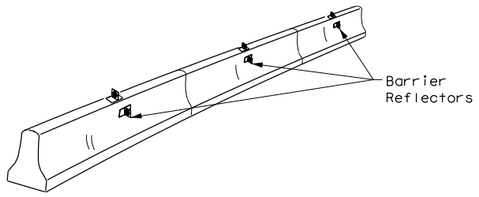

CONCRETE TRAFFIC BARRIER (CTB)

3. Where traffic is on one side of the CTB, two (2) Barrier Reflectors shall be mounted in approximately the midsection of each section of CTB. An alternate mounting location is uniformly spaced at one end of each CTB. This will allow for attachment of a barrier grapple without damaging the reflector. The Barrier Reflector mounted on the side of the CTB shall be located directly below the reflector mounted on top of the barrier, as shown in the detail above.
4. Where CTB separates two-way traffic, three barrier reflectors shall be mounted on each section of CTB. The reflector unit on top shall have two yellow reflective faces (Bi-Directional)while the reflectors on each side of the barrier shall have one yellow reflective face, as shown in the detail above.
5. When CTB separates traffic traveling in the same direction, no barrier reflectors will be required on top of the CTB.
6. Barrier Reflector units shall be yellow or white in color to match the edgeline being supplemented.
7. Maximum spacing of Barrier Reflectors is forty (40) feet.
8. Pavement markers or temporary flexible-reflective roadway marker tabs shall NOT be used as CTB delineation.
9. Attachment of Barrier Reflectors to CTB shall be per manufacturer's recommendations.
10. Missing or damaged Barrier Reflectors shall be replaced as directed by the Engineer.
11. Single slope barriers shall be delineated as shown on the above detail.

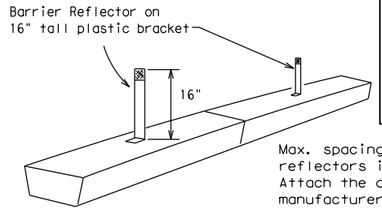

Max. spacing of barrier reflectors is 20 feet. Attach the delineators as per manufacturer's recommendations.

LOW PROFILE CONCRETE BARRIER (LPCB)

LOW PROFILE CONCRETE BARRIER (LPCB) USED IN WORK ZONES

LPCB is approved for use in work zone locations, where the posted speed is 45mph, or less. See Roadway Standard Sheet LPCB.

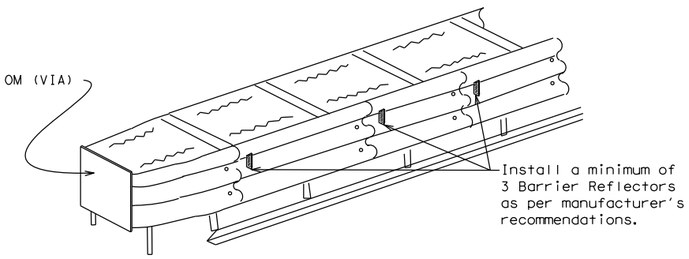

DELINEATION OF END TREATMENTS

END TREATMENTS FOR CTB'S USED IN WORK ZONES

End treatments used on CTB's in work zones shall meet the apppropriate crashworthy standards as defined in the Manual for Assessing Safety Hardware (MASH). Refer to the CWZTCD List for approved end treatments and manufacturers.

BARRIER REFLECTORS FOR CONCRETE TRAFFIC BARRIER AND ATTENUATORS

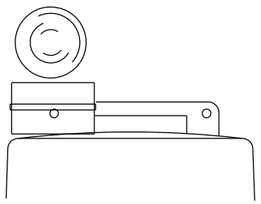

Type C Warning Light or approved substitute mounted on a drum adjacent to the travel way.

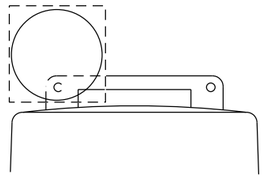

Warning reflector may be round or square.Must have a yellow reflective surface area of at least 30 square inches

WARNING LIGHTS

1. Warning lights shall meet the requirements of the TMUTCD.
2. Warning lights shall NOT be installed on barricades.
3. Type A-Low Intensity Flashing Warning Lights are commonly used with drums. They are intended to warn of or mark a potentially hazardous area. Their use shall be as indicated on this sheet and/or other sheets of the plans by the designation "FL". The Type A Warning Lights shall not be used with signs manufactured with Type B_{FL} or C_{FL} Sheeting meeting the requirements of Departmental Material Specification DMS-8300.
4. Type-C and Type D 360 degree Steady Burn Lights are intended to be used in a series for delineation to supplement other traffic control devices. Their use shall be as indicated on this sheet and/or other sheets of the plans by the designation "SB".
5. The Engineer/Inspector or the plans shall specify the location and type of warning lights to be installed on the traffic control devices.
6. When required by the Engineer, the Contractor shall furnish a copy of the warning lights certification. The warning light manufacturer will certify the warning lights meet the requirements of the latest ITE Purchase Specifications for Flashing and Steady-Burn Warning Lights.
7. When used to delineate curves, Type-C and Type D Steady Burn Lights should only be placed on the outside of the curve, not the inside.
8. The location of warning lights and warning reflectors on drums shall be as shown elsewhere in the plans.

WARNING LIGHTS MOUNTED ON PLASTIC DRUMS

1. Type A flashing warning lights are intended to warn drivers that they are approaching or are in a potentially hazardous area.
2. Type A random flashing warning lights are not intended for delineation and shall not be used in a series.
3. A series of sequential flashing warning lights placed on channelizing devices to form a merging taper may be used for delineation. If used, the successive flashing of the sequential warning lights should occur from the beginning of the taper to the end of the merging taper in order to identify the desired vehicle path. The rate of flashing for each light shall be 65 flashes per minute, plus or minus 10 flashes.
4. Type C and D steady-burn warning lights are intended to be used in a series to delineate the edge of the travel lane on detours, on lane changes, on lane closures, and on other similar conditions.
5. Type A, Type C and Type D warning lights shall be installed at locations as detailed on other sheets in the plans.
6. Warning lights shall not be installed on a drum that has a sign, chevron or vertical panel.
7. The maximum spacing for warning lights on drums should be identical to the channelizing device spacing.

WARNING REFLECTORS MOUNTED ON PLASTIC DRUMS AS A SUBSTITUTE FOR TYPE C (STEADY BURN) WARNING LIGHTS

1. A warning reflector or approved substitute may be mounted on a plastic drum as a substitute for a Type C, steady burn warning light at the discretion of the Contractor unless otherwise noted in the plans.
2. The warning reflector shall be yellow in color and shall be manufactured using a sign substrate approved for use with plastic drums listed on the CWZTCD.
3. The warning reflector shall have a minimum retroreflective surface area (one-side) of 30 square inches.
4. Round reflectors shall be fully reflectorized, including the area where attached to the drum.
5. Square substrates must have a minimum of 30 square inches of reflectorized sheeting. They do not have to be reflectorized where it attaches to the drum.
6. The side of the warning reflector facing approaching traffic shall have sheeting meeting the color and retroreflectivity requirements for DMS 8300-Type B or Type C.
7. When used near two-way traffic, both sides of the warning reflector shall be reflectorized.
8. The warning reflector should be mounted on the side of the handle nearest approaching traffic.
9. The maximum spacing for warning reflectors should be identical to the channelizing device spacing requirements.

Arrow Boards may be located behind channelizing devices in place for a shoulder taper or merging taper, otherwise they shall be delineated with four (4) channelizing devices placed perpendicular to traffic on the upstream side of traffic.

1. The Flashing Arrow Board should be used for all lane closures on multi-lane roadways, or slow moving maintenance or construction activities on the travel lanes.
2. Flashing Arrow Boards should not be used on two-lane, two-way roadways, detours, diversions or work on shoulders unless the "CAUTION" display (see detail below) is used.
3. The Engineer/Inspector shall choose all appropriate signs, barricades and/or other traffic control devices that should be used in conjunction with the Flashing Arrow Board.
4. The Flashing Arrow Board should be able to display the following symbols:

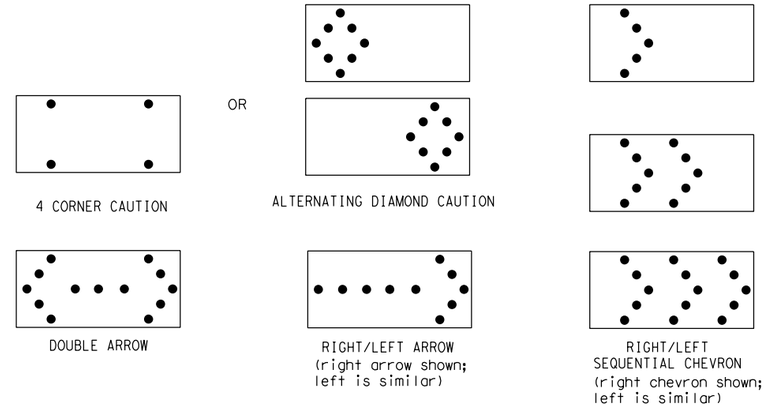

5. The "CAUTION" display consists of four corner lamps flashing simultaneously, or the Alternating Diamond Caution mode as shown.
6. The straight line caution display is NOT ALLOWED.
7. The Flashing Arrow Board shall be capable of minimum 50 percent dimming from rated lamp voltage. The flashing rate of the lamps shall not be less than 25 nor more than 40 flashes per minute.
8. Minimum lamp "on time" shall be approximately 50 percent for the flashing arrow and equal intervals of 25 percent for each sequential phase of the flashing chevron.
9. The sequential arrow display is NOT ALLOWED.
10. The flashing arrow display is the TxDOT standard; however, the sequential chevron display may be used during daylight operations.
11. The Flashing Arrow Board shall be mounted on a vehicle, trailer or other suitable support.
12. A Flashing Arrow Board SHALL NOT BE USED to laterally shift traffic.
13. A full matrix PCMS may be used to simulate a Flashing Arrow Board provided it meets visibility, flash rate and dimming requirements on this sheet for the same size arrow.
14. Minimum mounting height of trailer mounted Arrow Boards should be 7 feet from roadway to bottom of panel.

REQUIREMENTS			
TYPE	MINIMUM SIZE	MINIMUM NUMBER OF PANEL LAMPS	MINIMUM VISIBILITY DISTANCE
B	30 x 60	13	3/4 mile
C	48 x 96	15	1 mile

ATTENTION

Flashing Arrow Boards shall be equipped with automatic dimming devices.

WHEN NOT IN USE, REMOVE THE ARROW BOARD FROM THE RIGHT-OF-WAY OR PLACE THE ARROW BOARD BEHIND CONCRETE TRAFFIC BARRIER OR GUARDRAIL.

FLASHING ARROW BOARDS

TRUCK-MOUNTED ATTENUATORS

1. Truck-mounted attenuators (TMA) used on TxDOT facilities must meet the requirements outlined in the Manual for Assessing Safety Hardware (MASH).
2. Refer to the CWZTCD for the requirements of Level 2 or Level 3 TMAs.
3. Refer to the CWZTCD for a list of approved TMAs.
4. TMAs are required on freeways unless otherwise noted in the plans.
5. A TMA should be used anytime that it can be positioned 30 to 100 feet in advance of the area of crew exposure without adversely affecting the work performance.
6. The only reason a TMA should not be required is when a work area is spread down the roadway and the work crew is an extended distance from the TMA.

Texas Department of Transportation — Traffic Safety Division Standard

BARRICADE AND CONSTRUCTION ARROW PANEL, REFLECTORS, WARNING LIGHTS & ATTENUATOR

BC(7)-21

FILE: bc-21.dgn	DN: TxDOT	CK: TxDOT	DW: TxDOT	CK: TxDOT
©TxDOT November 2002	CONT	SECT	JOB	HIGHWAY
REVISIONS	0337	01	053	SH 29
9-07 8-14	DIST	COUNTY		SHEET NO.
7-13 5-21	AUS	WILLIAMSON		54

101

DISCLAIMER:
The use of this standard is governed by the "Texas Engineering Practice Act". No warranty of any kind is made by TxDOT for any purpose whatsoever. TxDOT assumes no responsibility for the conversion of this standard to other formats or for incorrect results or damages resulting from its use.

DATE: 12/18/2025 1:48:58 PM
FILE: pw://kh-pw.bentley.com:kh-pw-01/Documents/01 Active Projects/TX-GEO-069284005 - SH 29 Widening/4 - Design/Plan Set/2. TCP/STANDARDS/bc-21.dgn

GENERAL NOTES

1. For long term stationary work zones on freeways, drums shall be used as the primary channelizing device.
2. For intermediate term stationary work zones on freeways, drums should be used as the primary channelizing device but may be replaced in tangent sections by vertical panels, or 42" two-piece cones. In tangent sections, one-piece cones may be used with the approval of the Engineer but only if personnel are present on the project at all times to maintain the cones in proper position and location.
3. For short term stationary work zones on freeways, drums are the preferred channelizing device but may be replaced in tapers, transitions and tangent sections by vertical panels, two-piece cones or one-piece cones as approved by the Engineer.
4. Drums and all related items shall comply with the requirements of the current version of the "Texas Manual on Uniform Traffic Control Devices" (TMUTCD) and the "Compliant Work Zone Traffic Control Devices List" (CWZTCD).
5. Drums, bases, and related materials shall exhibit good workmanship and shall be free from objectionable marks or defects that would adversely affect their appearance or serviceability.
6. The Contractor shall have a maximum of 24 hours to replace any plastic drums identified for replacement by the Engineer/Inspector. The replacement device must be an approved device.

GENERAL DESIGN REQUIREMENTS

Pre-qualified plastic drums shall meet the following requirements:

1. Plastic drums shall be a two-piece design; the "body" of the drum shall be the top portion and the "base" shall be the bottom.
2. The body and base shall lock together in such a manner that the body separates from the base when impacted by a vehicle traveling at a speed of 20 MPH or greater but prevents accidental separation due to normal handling and/or air turbulence created by passing vehicles.
3. Plastic drums shall be constructed of lightweight flexible, and deformable materials. The Contractor shall NOT use metal drums or single piece plastic drums as channelization devices or sign supports.
4. Drums shall present a profile that is a minimum of 18 inches in width at the 36 inch height when viewed from any direction. The height of drum unit (body installed on base) shall be a minimum of 36 inches and a maximum of 42 inches.
5. The top of the drum shall have a built-in handle for easy pickup and shall be designed to drain water and not collect debris. The handle shall have a minimum of two widely spaced 9/16 inch diameter holes to allow attachment of a warning light, warning reflector unit or approved compliant sign.
6. The exterior of the drum body shall have a minimum of four alternating orange and white retroreflective circumferential stripes not less than 4 inches nor greater than 8 inches in width. Any non-reflectorized space between any two adjacent stripes shall not exceed 2 inches in width.
7. Bases shall have a maximum width of 36 inches, a maximum height of 4 inches, and a minimum of two footholds of sufficient size to allow base to be held down while separating the drum body from the base.
8. Plastic drums shall be constructed of ultra-violet stabilized, orange, high-density polyethylene (HDPE) or other approved material.
9. Drum body shall have a maximum unballasted weight of 11 lbs.
10. Drum and base shall be marked with manufacturer's name and model number.

RETROREFLECTIVE SHEETING

1. The stripes used on drums shall be constructed of sheeting meeting the color and retroreflectivity requirements of Departmental Materials Specification DMS-8300, "Sign Face Materials," Type A or Type B reflective sheeting shall be supplied unless otherwise specified in the plans.
2. The sheeting shall be suitable for use on and shall adhere to the drum surface such that, upon vehicular impact, the sheeting shall remain adhered in-place and exhibit no delaminating, cracking, or loss of retroreflectivity other than that loss due to abrasion of the sheeting surface.

BALLAST

1. Unballasted bases shall be large enough to hold up to 50 lbs. of sand. This base, when filled with the ballast material, should weigh between 35 lbs (minimum) and 50 lbs (maximum). The ballast may be sand in one to three sandbags separate from the base, sand in a sand-filled plastic base, or other ballasting devices as approved by the Engineer. Stacking of sandbags will be allowed, however height of sandbags above pavement surface may not exceed 12 inches.
2. Bases with built-in ballast shall weigh between 40 lbs. and 50 lbs. Built-in ballast can be constructed of an integral crumb rubber base or a solid rubber base.
3. Recycled truck tire sidewalls may be used for ballast on drums approved for this type of ballast on the CWZTCD list.
4. The ballast shall not be heavy objects, water, or any material that would become hazardous to motorists, pedestrians, or workers when the drum is struck by a vehicle.
5. When used in regions susceptible to freezing, drums shall have drainage holes in the bottoms so that water will not collect and freeze becoming a hazard when struck by a vehicle.
6. Ballast shall not be placed on top of drums.
7. Adhesives may be used to secure base of drums to pavement.

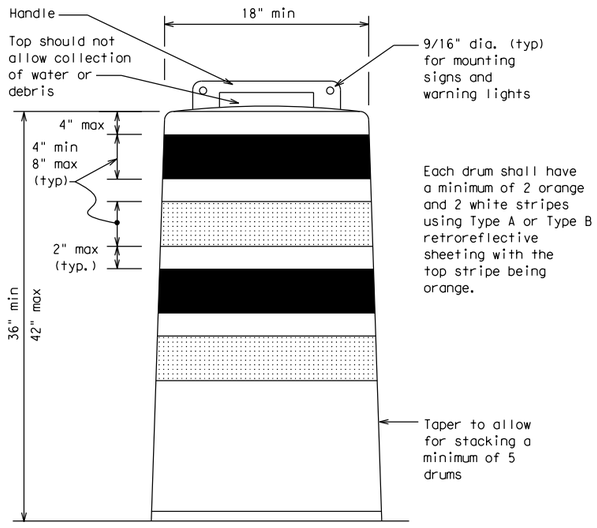

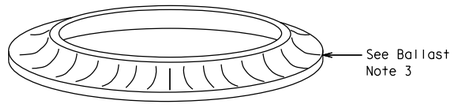

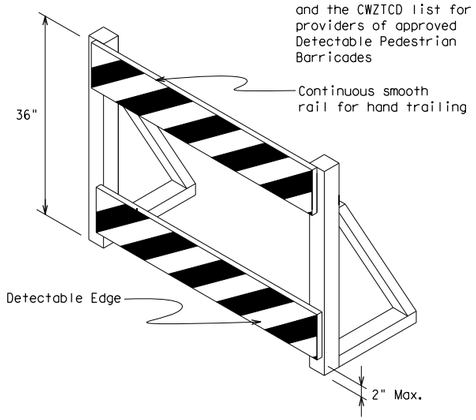

DETECTABLE PEDESTRIAN BARRICADES

1. When existing pedestrian facilities are disrupted, closed, or relocated in a TTC zone, the temporary facilities shall be detectable and include accessibility features consistent with the features present in the existing pedestrian facility. Refer to WZ(BTS-2) for Pedestrian Control requirements for Sidewalk Diversions, Sidewalk Detours and Crosswalk Closures.
2. Where pedestrians with visual disabilities normally use the closed sidewalk, a Detectable Pedestrian Barricade shall be placed across the full width of the closed sidewalk instead of a Type 3 Barricade.
3. Detectable pedestrian barricades similar to the one pictured above, longitudinal channelizing devices, some concrete barriers, and wood or chain link fencing with a continuous detectable edging can satisfactorily delineate a pedestrian path.
4. Tape, rope, or plastic chain strung between devices are not detectable, do not comply with the design standards in the "Americans with Disabilities Act Accessibility Guidelines (ADAAG)" and should not be used as a control for pedestrian movements.
5. Warning lights shall not be attached to detectable pedestrian barricades.
6. Detectable pedestrian barricades should use 8" nominal barricade rails as shown on BC(10) provided that the top rail provides a smooth continuous rail suitable for hand trailing with no splinters, burrs, or sharp edges.

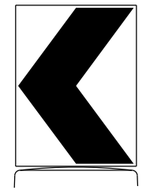

18" x 24" Sign
(Maximum Sign Dimension)
Chevron CW1-8, Opposing Traffic Lane Divider, Driveway sign D70a, Keep Right R4 series or other signs as approved by Engineer

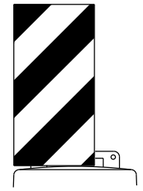

12" x 24"
Vertical Panel
mount with diagonals sloping down towards travel way

Plywood, Aluminum or Metal sign substrates shall NOT be used on plastic drums

SIGNS, CHEVRONS, AND VERTICAL PANELS MOUNTED ON PLASTIC DRUMS

.

1. Signs used on plastic drums shall be manufactured using substrates listed on the CWZTCD.
2. Chevrons and other work zone signs with an orange background shall be manufactured with Type B_{FL} or Type C_{FL} Orange sheeting meeting the color and retroreflectivity requirements of DMS-8300, "Sign Face Material," unless otherwise specified in the plans.
3. Vertical Panels shall be manufactured with orange and white sheeting meeting the requirements of DMS-8300 Type A or Type B. Diagonal stripes on Vertical Panels shall slope down toward the intended traveled lane.
4. Other sign messages (text or symbolic) may be used as approved by the Engineer. Sign dimensions shall not exceed 18 inches in width or 24 inches in height, except for the R9 series signs discussed in note 8 below.
5. Signs shall be installed using a 1/2 inch bolt (nominal) and nut, two washers, and one locking washer for each connection.
6. Mounting bolts and nuts shall be fully engaged and adequately torqued. Bolts should not extend more than 1/2 inch beyond nuts.
7. Chevrons may be placed on drums on the outside of curves, on merging tapers or on shifting tapers. When used in these locations, they may be placed on every drum or spaced not more than on every third drum. A minimum of three (3) should be used at each location called for in the plans.
8. R9-9, R9-10, R9-11 and R9-11a Sidewalk Closed signs which are 24 inches wide may be mounted on plastic drums, with approval of the Engineer.

Texas Department of Transportation | Traffic Safety Division Standard

BARRICADE AND CONSTRUCTION CHANNELIZING DEVICES

BC(8)-21

FILE: bc-21.dgn	DN: TxDOT	CK: TxDOT	DW: TxDOT	CK: TxDOT
©TxDOT November 2002	CONT	SECT	JOB	HIGHWAY
REVISIONS	0337	01	053	SH 29
4-03 8-14	DIST	COUNTY		SHEET NO.
9-07 5-21	AUS	WILLIAMSON		55
7-13				

102

DISCLAIMER:
The use of this standard is governed by the "Texas Engineering Practice Act". No warranty of any kind is made by TxDOT for any purpose whatsoever. TxDOT assumes no responsibility for the conversion of this standard to other formats or for incorrect results or damages resulting from its use.

DATE: 12/18/2025 1:48:59 PM
FILE: pw://kh-pw.bentley.com:kh-pw-01/Documents/01 Active Projects/TX-GEO-069284005 - SH 29 Widening/4 - Design/Plan Set/2. TCP/STANDARDS/bc-21.dgn

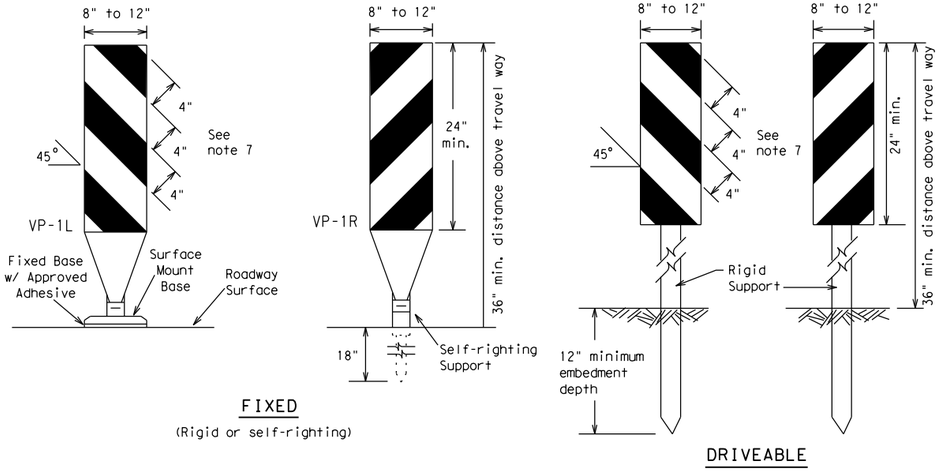

FIXED
(Rigid or self-righting)

DRIVEABLE

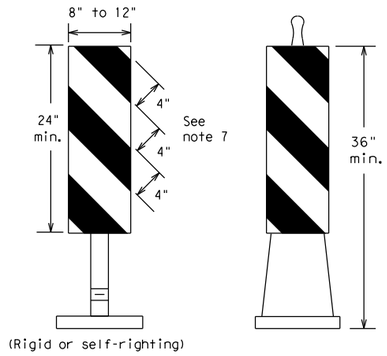

(Rigid or self-righting)

PORTABLE

1. Vertical Panels (VP's) are normally used to channelize traffic or divide opposing lanes of traffic.
2. VP's may be used in daytime or nighttime situations. They may be used at the edge of shoulder drop-offs and other areas such as lane transitions where positive daytime and nighttime delineation is required. The Engineer/Inspector shall refer to the Roadway Design Manual for additional requirements on the use VP's for drop-offs.
3. VP's should be mounted back to back if used at the edge of cuts adjacent to two-way two lane roadways. Stripes are to be reflective orange and reflective white and should always slope downward toward the travel lane.
4. VP's used on expressways and freeways or other high speed roadways, may have more than 270 square inches of retroreflective area facing traffic.
5. Self-righting supports are available with portable base. See "Compliant Work Zone Traffic Control Devices List" (CWZTCD).
6. Sheeting for the VP's shall be retroreflective Type A or Type B conforming to Departmental Material Specification DMS-8300, unless noted otherwise.
7. Where the height of reflective material on the vertical panel is 36 inches or greater, a panel stripe of 6 inches shall be used.

VERTICAL PANELS (VPs)

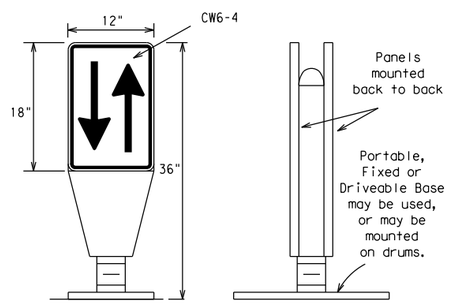

1. Opposing Traffic Lane Dividers (OTLD) are delineation devices designed to convert a normal one-way roadway section to two-way operation. OTLD's are used on temporary centerlines. The upward and downward arrows on the sign's face indicate the direction of traffic on either side of the divider. The base is secured to the pavement with an adhesive or rubber weight to minimize movement caused by a vehicle impact or wind gust.
2. The OTLD may be used in combination with 42" cones or VPs.
3. Spacing between the OTLD shall not exceed 500 feet. 42" cones or VPs placed between the OTLD's should not exceed 100 foot spacing.
4. The OTLD shall be orange with a black non-reflective legend. Sheeting for the OTLD shall be retroreflective Type B_{FL} or Type C_{FL} conforming to Departmental Material Specification DMS-8300, unless noted otherwise. The legend shall meet the requirements of DMS-8300.

OPPOSING TRAFFIC LANE DIVIDERS (OTLD)

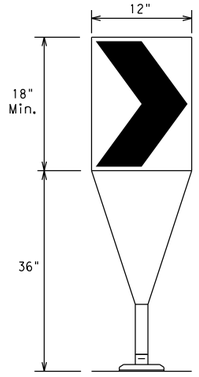

Fixed Base w/ Approved Adhesive (Driveable Base, or Flexible Support can be used)

1. The chevron shall be a vertical rectangle with a minimum size of 12 by 18 inches.
2. Chevrons are intended to give notice of a sharp change of alignment with the direction of travel and provide additional emphasis and guidance for vehicle operators with regard to changes in horizontal alignment of the roadway.
3. Chevrons, when used, shall be erected on the outside of a sharp curve or turn, or on the far side of an intersection. They shall be in line with and at right angles to approaching traffic. Spacing should be such that the motorist always has three in view, until the change in alignment eliminates its need.
4. To be effective, the chevron should be visible for at least 500 feet.
5. Chevrons shall be orange with a black nonreflective legend. Sheeting for the chevron shall be retroreflective Type B_{FL} or Type C_{FL} conforming to Departmental Material Specification DMS-8300, unless noted otherwise. The legend shall meet the requirements of DMS-8300.
6. For Long Term Stationary use on tapers or transitions on freeways and divided highways, self-righting chevrons may be used to supplement plastic drums but not to replace plastic drums.

CHEVRONS

GENERAL NOTES

1. Work Zone channelizing devices illustrated on this sheet may be installed in close proximity to traffic and are suitable for use on high or low speed roadways. The Engineer/Inspector shall ensure that spacing and placement is uniform and in accordance with the "Texas Manual on Uniform Traffic Control Devices" (TMUTCD).
2. Channelizing devices shown on this sheet may have a driveable, fixed or portable base. The requirement for self-righting channelizing devices must be specified in the General Notes or other plan sheets.
3. Channelizing devices on self-righting supports should be used in work zone areas where channelizing devices are frequently impacted by errant vehicles or vehicle related wind gusts making alignment of the channelizing devices difficult to maintain. Locations of these devices shall be detailed elsewhere in the plans. These devices shall conform to the TMUTCD and the "Compliant Work Zone Traffic Control Devices List" (CWZTCD).
4. The Contractor shall maintain devices in a clean condition and replace damaged, nonreflective, faded, or broken devices and bases as required by the Engineer/Inspector. The Contractor shall be required to maintain proper device spacing and alignment.
5. Portable bases shall be fabricated from virgin and/or recycled rubber. The portable bases shall weigh a minimum of 30 lbs.
6. Pavement surfaces shall be prepared in a manner that ensures proper bonding between the adhesives, the fixed mount bases and the pavement surface. Adhesives shall be prepared and applied according to the manufacturer's recommendations.
7. The installation and removal of channelizing devices shall not cause detrimental effects to the final pavement surfaces, including pavement surface discoloration or surface integrity. Driveable bases shall not be permitted on final pavement surfaces. The Engineer/Inspector shall approve all application and removal procedures of fixed bases.

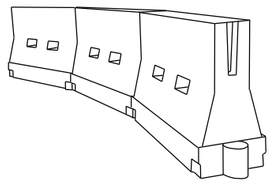

LONGITUDINAL CHANNELIZING DEVICES (LCD)

1. LCDs are crashworthy, lightweight, deformable devices that are highly visible, have good target value and can be connected together. They are not designed to contain or redirect a vehicle on impact.
2. LCDs may be used instead of a line of cones or drums.
3. LCDs shall be placed in accordance to application and installation requirements specific to the device, and used only when shown on the CWZTCD list.
4. LCDs should not be used to provide positive protection for obstacles, pedestrians or workers.
5. LCDs shall be supplemented with retroreflective delineation as required for temporary barriers on BC(7) when placed roughly parallel to the travel lanes.
6. LCDs used as barricades placed perpendicular to traffic should have at least one row of reflective sheeting meeting the requirements for barricade rails as shown on BC(10). Place reflective sheeting near the top of the LCD along the full length of the device.

WATER BALLASTED SYSTEMS USED AS BARRIERS

1. Water ballasted systems used as barriers shall not be used solely to channelize road users, but also to protect the work space per the appropriate Manual for Assessing Safety Hardware (MASH) crashworthiness requirements based on roadway speed and barrier application.
2. Water ballasted systems used to channelize vehicular traffic shall be supplemented with retroreflective delineation or channelizing devices to improve daytime/nighttime visibility. They may also be supplemented with pavement markings.
3. Water ballasted systems used as barriers shall be placed in accordance to application and installation requirements specific to the device, and used only when shown on the CWZTCD list.
4. Water ballasted systems used as barriers should not be used for a merging taper except in low speed (less than 45 MPH) urban areas. When used on a taper in a low speed urban area, the taper shall be delineated and the taper length should be designed to optimize road user operations considering the available geometric conditions.
5. When water ballasted systems used as barriers have blunt ends exposed to traffic, they should be attenuated as per manufacturer recommendations or flared to a point outside the clear zone.

If used to channelize pedestrians, longitudinal channelizing devices or water ballasted systems must have a continuous detectable bottom for users of long canes and the top of the unit shall not be less than 32 inches in height.

HOLLOW OR WATER BALLASTED SYSTEMS USED AS LONGITUDINAL CHANNELIZING DEVICES OR BARRIERS

Posted Speed	Formula	Minimum Desirable Taper Lengths ** 10' Offset	11' Offset	12' Offset	Suggested Maximum Spacing of Channelizing Devices On a Taper	On a Tangent
30	$L = \frac{WS^2}{60}$	150'	165'	180'	30'	60'
35		205'	225'	245'	35'	70'
40		265'	295'	320'	40'	80'
45	L = WS	450'	495'	540'	45'	90'
50		500'	550'	600'	50'	100'
55		550'	605'	660'	55'	110'
60		600'	660'	720'	60'	120'
65		650'	715'	780'	65'	130'
70		700'	770'	840'	70'	140'
75		750'	825'	900'	75'	150'
80		800'	880'	960'	80'	160'

** Taper lengths have been rounded off.
L=Length of Taper (FT.) W=Width of Offset (FT.)
S=Posted Speed (MPH)

SUGGESTED MAXIMUM SPACING OF CHANNELIZING DEVICES AND MINIMUM DESIRABLE TAPER LENGTHS

SHEET 9 OF 12

Texas Department of Transportation | Traffic Safety Division Standard

BARRICADE AND CONSTRUCTION CHANNELIZING DEVICES

BC(9)-21

FILE: bc-21.dgn	DN: TxDOT	CK: TxDOT	DW: TxDOT	CK: TxDOT
© TxDOT November 2002	CONT	SECT	JOB	HIGHWAY
REVISIONS	0337	01	053	SH 29
9-07 8-14	DIST	COUNTY		SHEET NO.
7-13 5-21	AUS	WILLIAMSON		56

DISCLAIMER:
The use of this standard is governed by the "Texas Engineering Practice Act". No warranty of any kind is made by TxDOT for any purpose whatsoever. TxDOT assumes no responsibility for the conversion of this standard to other formats or for incorrect results or damages resulting from its use.

DATE: 12/18/2025 1:48:59 PM
FILE: pw://kh-pw.bentley.com:kh-pw-01/Documents/01 Active Projects/TX-GEO-069284005 - SH 29 Widening/4 - Design/Plan Set/2. TCP/STANDARDS/bc-21.dgn

TYPE 3 BARRICADES

1. Refer to the Compliant Work Zone Traffic Control Devices List (CWZTCD) for details of the Type 3 Barricades and a list of all materials used in the construction of Type 3 Barricades.
2. Type 3 Barricades shall be used at each end of construction projects closed to all traffic.
3. Barricades extending across a roadway should have stripes that slope downward in the direction toward which traffic must turn in detouring. When both right and left turns are provided, the chevron striping may slope downward in both directions from the center of the barricade. Where no turns are provided at a closed road, striping should slope downward in both directions toward the center of roadway.
4. Striping of rails, for the right side of the roadway, should slope downward to the left. For the left side of the roadway, striping should slope downward to the right.
5. Identification markings may be shown only on the back of the barricade rails. The maximum height of letters and/or company logos used for identification shall be 1".
6. Barricades shall not be placed parallel to traffic unless an adequate clear zone is provided.
7. Warning lights shall NOT be installed on barricades.
8. Where barricades require the use of weights to keep from turning over, the use of sandbags with dry, cohesionless sand is recommended. The sandbags will be tied shut to keep the sand from spilling and to maintain a constant weight. Sand bags shall not be stacked in a manner that covers any portion of a barricade rails reflective sheeting. Rock, concrete, iron, steel or other solid objects will NOT be permitted. Sandbags should weigh a minimum of 35 lbs and a maximum of 50 lbs. Sandbags shall be made of a durable material that tears upon vehicular impact. Rubber (such as tire inner tubes) shall not be used for sandbags. Sandbags shall only be placed along or upon the base supports of the device and shall not be suspended above ground level or hung with rope, wire, chains or other fasteners.
9. Sheeting for barricades shall be retroreflective Type A or Type B conforming to Departmental Material Specification DMS-8300 unless otherwise noted.

Barricades shall NOT be used as a sign support.

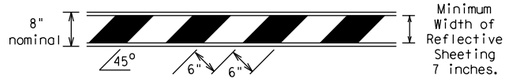

TYPICAL STRIPING DETAIL FOR BARRICADE RAIL

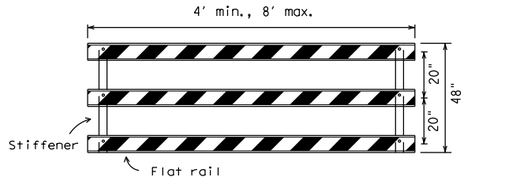

Stiffener may be inside or outside of support, but no more than 2 stiffeners shall be allowed on one barricade.

TYPICAL PANEL DETAIL
FOR SKID OR POST TYPE BARRICADES

Each roadway of a divided highway shall be barricaded in the same manner.

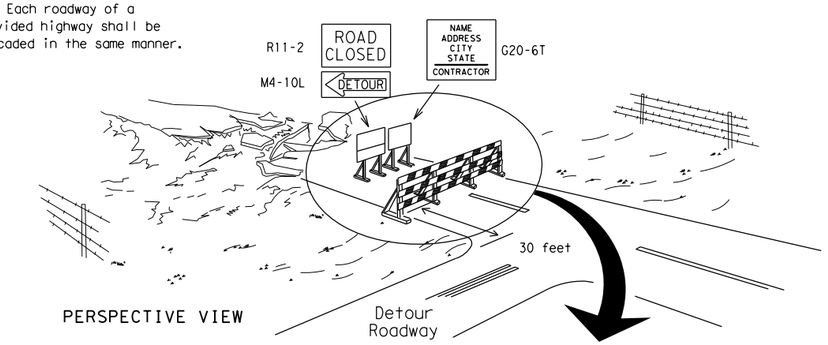

PERSPECTIVE VIEW

The three rails on Type 3 barricades shall be reflectorized orange and reflective white stripes on one side facing one-way traffic and both sides for two-way traffic.

Barricade striping should slant downward in the direction of detour.

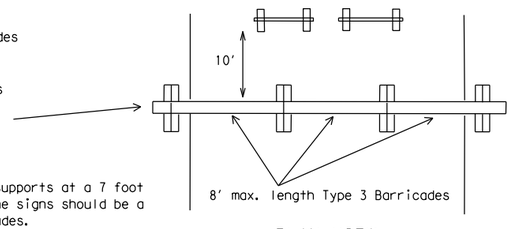

PLAN VIEW

1. Signs should be mounted on independent supports at a 7 foot mounting height in center of roadway. The signs should be a minimum of 10 feet behind Type 3 Barricades.
2. Advance signing shall be as specified elsewhere in the plans.

TYPE 3 BARRICADE (POST AND SKID) TYPICAL APPLICATION

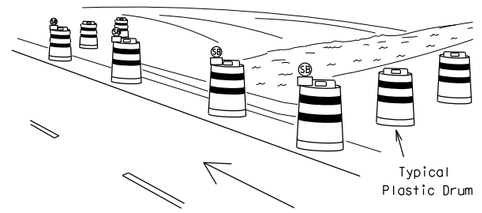

PERSPECTIVE VIEW

1. Where positive redirectional capability is provided, drums may be omitted.
2. Plastic construction fencing may be used with drums for safety as required in the plans.
3. Vertical Panels on flexible support may be substituted for drums when the shoulder width is less than 4 feet.
4. When the shoulder width is greater than 12 feet, steady-burn lights may be omitted if drums are used.
5. Drums must extend the length of the culvert widening.

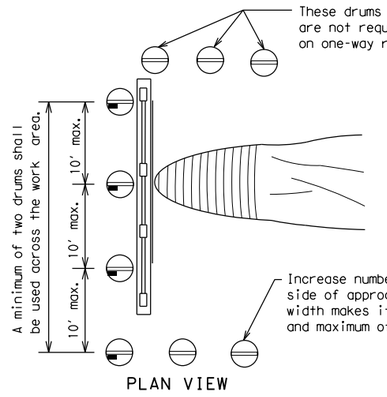

PLAN VIEW

LEGEND	
	Plastic drum
	Plastic drum with steady burn light or yellow warning reflector
SB	Steady burn warning light or yellow warning reflector

CULVERT WIDENING OR OTHER ISOLATED WORK WITHIN THE PROJECT LIMITS

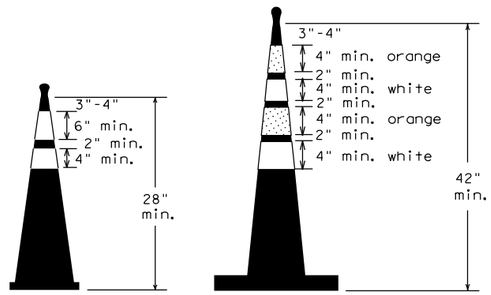

Two-Piece cones

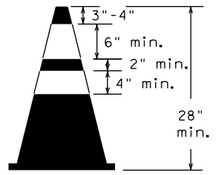

One-Piece cones

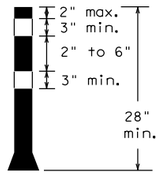

Tubular Marker

28" Cones shall have a minimum weight of 9 1/2 lbs.

42" 2-piece cones shall have a minimum weight of 30 lbs. including base.

1. Traffic cones and tubular markers shall be predominantly orange, and meet the height and weight requirements shown above.
2. One-piece cones have the body and base of the cone molded in one consolidated unit. Two-piece cones have a cone shaped body and a separate rubber base, or ballast, that is added to keep the device upright and in place.
3. Two-piece cones may have a handle or loop extending up to 8" above the minimum height shown, in order to aid in retrieving the device.
4. Cones or tubular markers shall have white or white and orange reflective bands as shown above. The reflective bands shall have a smooth, sealed outer surface and meet the requirements of Departmental Material Specification DMS-8300 Type A or Type B.
5. 28" cones and tubular markers are generally suitable for short duration and short-term stationary work as defined on BC(4). These should not be used for intermediate-term or long-term stationary work unless personnel is on-site to maintain them in their proper upright position.
6. 42" two-piece cones, vertical panels or drums are suitable for all work zone durations.
7. Cones or tubular markers used on each project should be of the same size and shape.

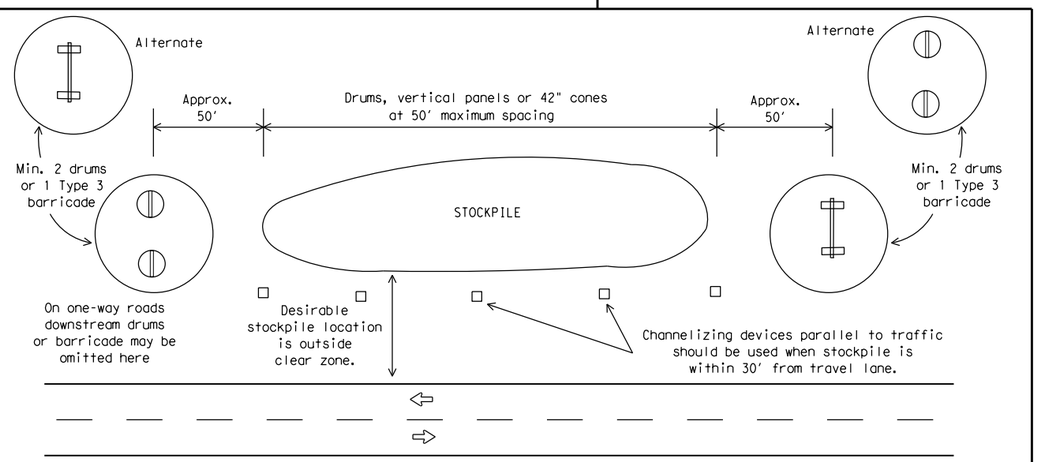

TRAFFIC CONTROL FOR MATERIAL STOCKPILES

SHEET 10 OF 12

Texas Department of Transportation

Traffic Safety Division Standard

BARRICADE AND CONSTRUCTION CHANNELIZING DEVICES

BC(10)-21

FILE: bc-21.dgn	DN: TxDOT	CK: TxDOT	DW: TxDOT	CK: TxDOT
©TxDOT November 2002	CONT	SECT	JOB	HIGHWAY
REVISIONS	0337	01	053	SH 29
9-07 8-14	DIST	COUNTY		SHEET NO.
7-13 5-21	AUS	WILLIAMSON		57

104

DISCLAIMER:
The use of this standard is governed by the "Texas Engineering Practice Act". No warranty of any kind is made by TxDOT for any purpose whatsoever. TxDOT assumes no responsibility for the conversion of this standard to other formats or for incorrect results or damages resulting from its use.
DATE: 12/18/2025 1:49:00 PM
FILE: pw://kh-pw.bentley.com:kh-pw-01/Documents/01 Active Projects/TX-GEO-069284005 - SH 29 Widening/4 - Design/Plan Set/2. TCP/STANDARDS/bc-21.dgn

WORK ZONE PAVEMENT MARKINGS

GENERAL

1. The Contractor shall be responsible for maintaining work zone and existing pavement markings, in accordance with the standard specifications and special provisions, on all roadways open to traffic within the CSJ limits unless otherwise stated in the plans.
2. Color, patterns and dimensions shall be in conformance with the "Texas Manual on Uniform Traffic Control Devices" (TMUTCD).
3. Additional supplemental pavement marking details may be found in the plans or specifications.
4. Pavement markings shall be installed in accordance with the TMUTCD and as shown on the plans.
5. When short term markings are required on the plans, short term markings shall conform with the TMUTCD, the plans and details as shown on the Standard Plan Sheet WZ(STPM).
6. When standard pavement markings are not in place and the roadway is opened to traffic, DO NOT PASS signs shall be erected to mark the beginning of the sections where passing is prohibited and PASS WITH CARE signs at the beginning of sections where passing is permitted.
7. All work zone pavement markings shall be installed in accordance with Item 662, "Work Zone Pavement Markings."

RAISED PAVEMENT MARKERS

1. Raised pavement markers are to be placed according to the patterns on BC(12).
2. All raised pavement markers used for work zone markings shall meet the requirements of Item 672, "RAISED PAVEMENT MARKERS" and Departmental Material Specification DMS-4200 or DMS-4300.

PREFABRICATED PAVEMENT MARKINGS

1. Removable prefabricated pavement markings shall meet the requirements of DMS-8241.
2. Non-removable prefabricated pavement markings (foil back) shall meet the requirements of DMS-8240.

MAINTAINING WORK ZONE PAVEMENT MARKINGS

1. The Contractor will be responsible for maintaining work zone pavement markings within the work limits.
2. Work zone pavement markings shall be inspected in accordance with the frequency and reporting requirements of work zone traffic control device inspections as required by Form 599.
3. The markings should provide a visible reference for a minimum distance of 300 feet during normal daylight hours and 160 feet when illuminated by automobile low-beam headlights at night, unless sight distance is restricted by roadway geometrics.
4. Markings failing to meet this criteria within the first 30 days after placement shall be replaced at the expense of the Contractor as per Specification Item 662.

REMOVAL OF PAVEMENT MARKINGS

1. Pavement markings that are no longer applicable, could create confusion or direct a motorist toward or into the closed portion of the roadway shall be removed or obliterated before the roadway is opened to traffic.
2. The above shall not apply to detours in place for less than three days, where flaggers and/or sufficient channelizing devices are used in lieu of markings to outline the detour route.
3. Pavement markings shall be removed to the fullest extent possible, so as not to leave a discernable marking. This shall be by any method approved by TxDOT Specification Item 677 for "Eliminating Existing Pavement Markings and Markers".
4. The removal of pavement markings may require resurfacing or seal coating portions of the roadway as described in Item 677.
5. Subject to the approval of the Engineer, any method that proves to be successful on a particular type pavement may be used.
6. Blast cleaning may be used but will not be required unless specifically shown in the plans.
7. Over-painting of the markings SHALL NOT BE permitted.
8. Removal of raised pavement markers shall be as directed by the Engineer.
9. Removal of existing pavement markings and markers will be paid for directly in accordance with Item 677, "ELIMINATING EXISTING PAVEMENT MARKINGS AND MARKERS," unless otherwise stated in the plans.
10. Black-out marking tape may be used to cover conflicting existing markings for periods less than two weeks when approved by the Engineer.

Temporary Flexible-Reflective Roadway Marker Tabs

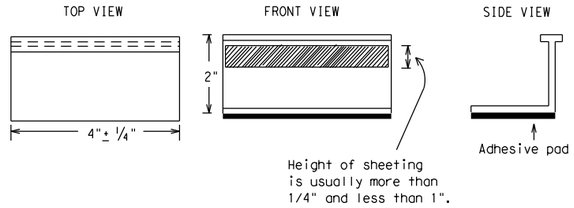

STAPLES OR NAILS SHALL NOT BE USED TO SECURE TEMPORARY FLEXIBLE-REFLECTIVE ROADWAY MARKER TABS TO THE PAVEMENT SURFACE

1. Temporary flexible-reflective roadway marker tabs used as guidemarks shall meet the requirements of DMS-8242.
2. Tabs detailed on this sheet are to be inspected and accepted by the Engineer or designated representative. Sampling and testing is not normally required, however at the option of the Engineer, either "A" or "B" below may be imposed to assure quality before placement on the roadway.
   A. Select five (5) or more tabs at random from each lot or shipment and submit to the Construction Division, Materials and Pavement Section to determine specification compliance.
   B. Select five (5) tabs and perform the following test. Affix five (5) tabs at 24 inch intervals on an asphaltic pavement in a straight line. Using a medium size passenger vehicle or pickup, run over the markers with the front and rear tires at a speed of 35 to 40 miles per hour, four (4) times in each direction. No more than one (1) out of the five (5) reflective surfaces shall be lost or displaced as a result of this test.
3. Small design variances may be noted between tab manufacturers.
4. See Standard Sheet WZ(STPM) for tab placement on new pavements. See Standard Sheet TCP(7-1) for tab placement on seal coat work.

RAISED PAVEMENT MARKERS USED AS GUIDEMARKS

1. Raised pavement markers used as guidemarks shall be from the approved product list, and meet the requirements of DMS-4200.
2. All temporary construction raised pavement markers provided on a project shall be of the same manufacturer.
3. Adhesive for guidemarks shall be bituminous material hot applied or butyl rubber pad for all surfaces, or thermoplastic for concrete surfaces.

Guidemarks shall be designated as:
YELLOW - (two amber reflective surfaces with yellow body).
WHITE - (one silver reflective surface with white body).

DEPARTMENTAL MATERIAL SPECIFICATIONS	
PAVEMENT MARKERS (REFLECTORIZED)	DMS-4200
TRAFFIC BUTTONS	DMS-4300
EPOXY AND ADHESIVES	DMS-6100
BITUMINOUS ADHESIVE FOR PAVEMENT MARKERS	DMS-6130
PERMANENT PREFABRICATED PAVEMENT MARKINGS	DMS-8240
TEMPORARY REMOVABLE, PREFABRICATED PAVEMENT MARKINGS	DMS-8241
TEMPORARY FLEXIBLE, REFLECTIVE ROADWAY MARKER TABS	DMS-8242

A list of prequalified reflective raised pavement markers, non-reflective traffic buttons, roadway marker tabs and other pavement markings can be found at the Material Producer List web address shown on BC(1).

Texas Department of Transportation

Traffic Safety Division Standard

BARRICADE AND CONSTRUCTION PAVEMENT MARKINGS

BC(11)-21

FILE: bc-21.dgn	DN: TxDOT	CK: TxDOT	DW: TxDOT	CK: TxDOT
©TxDOT February 1998	CONT	SECT	JOB	HIGHWAY
REVISIONS	0337	01	053	SH 29
2-98 9-07 5-21	DIST	COUNTY		SHEET NO.
1-02 7-13	AUS	WILLIAMSON		58
11-02 8-14				

105

DISCLAIMER:
The use of this standard is governed by the "Texas Engineering Practice Act". No warranty of any kind is made by TxDOT for any purpose whatsoever. TxDOT assumes no responsibility for the conversion of this standard to other formats or for incorrect results or damages resulting from its use.

DATE: 12/18/2025 1:49:00 PM
FILE: pw://kh-pw.bentley.com:kh-pw-01/Documents/01 Active Projects/TX-GEO-069284005 - SH 29 Widening/4 - Design/Plan Set/2. TCP/STANDARDS/bc-21.dgn

PAVEMENT MARKING PATTERNS

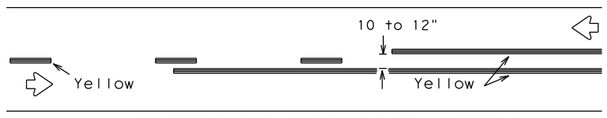

REFLECTORIZED PAVEMENT MARKINGS - PATTERN A

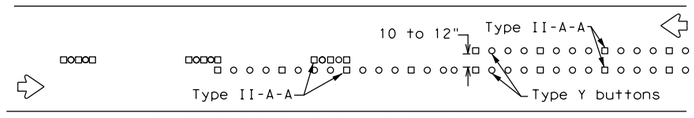

RAISED PAVEMENT MARKERS - PATTERN A

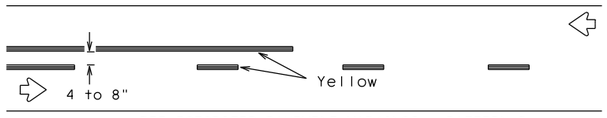

REFLECTORIZED PAVEMENT MARKINGS - PATTERN B

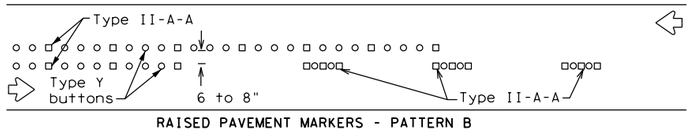

RAISED PAVEMENT MARKERS - PATTERN B

Pattern A is the TXDOT Standard, however Pattern B may be used if approved by the Engineer.
Prefabricated markings may be substituted for reflectorized pavement markings.

CENTER LINE & NO-PASSING ZONE BARRIER LINES FOR TWO-LANE, TWO-WAY HIGHWAYS

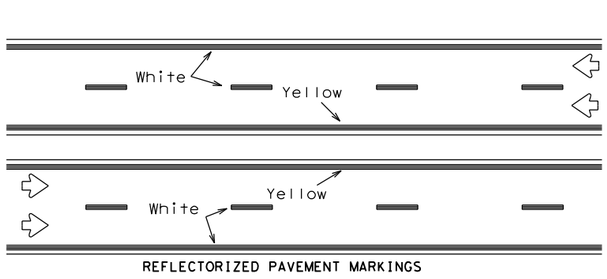

REFLECTORIZED PAVEMENT MARKINGS

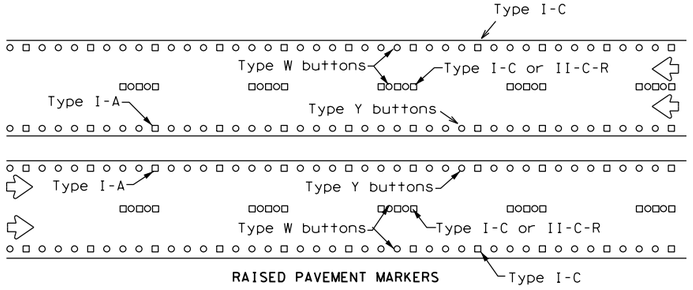

RAISED PAVEMENT MARKERS

Prefabricated markings may be substituted for reflectorized pavement markings.

EDGE & LANE LINES FOR DIVIDED HIGHWAY

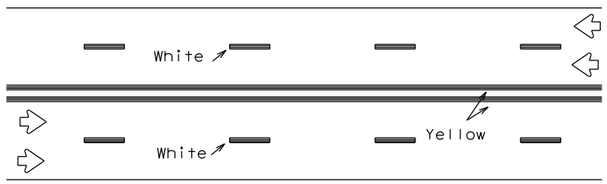

REFLECTORIZED PAVEMENT MARKINGS

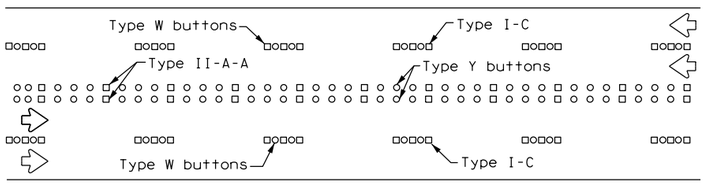

RAISED PAVEMENT MARKERS

Prefabricated markings may be substituted for reflectorized pavement markings.

LANE & CENTER LINES FOR MULTILANE UNDIVIDED HIGHWAYS

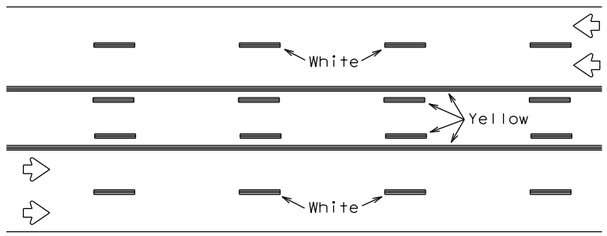

REFLECTORIZED PAVEMENT MARKINGS

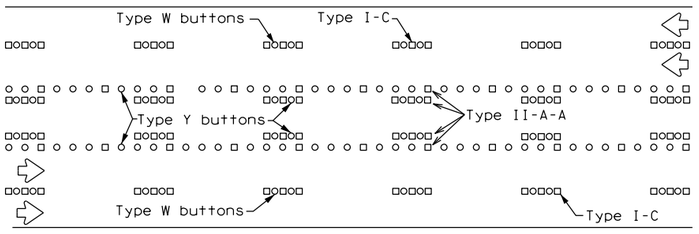

RAISED PAVEMENT MARKERS

Prefabricated markings may be substituted for reflectorized pavement markings.

TWO-WAY LEFT TURN LANE

STANDARD WORK ZONE PAVEMENT MARKINGS DETAILS

SOLID LINES

DOUBLE NO-PASSING LINE

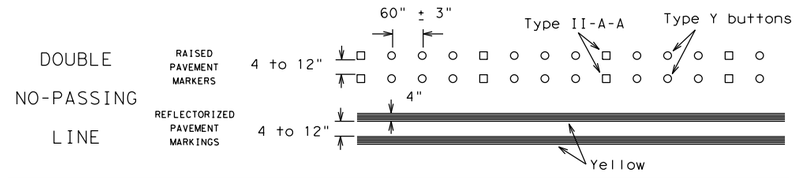

EDGE LINE OR SINGLE NO-PASSING LINE

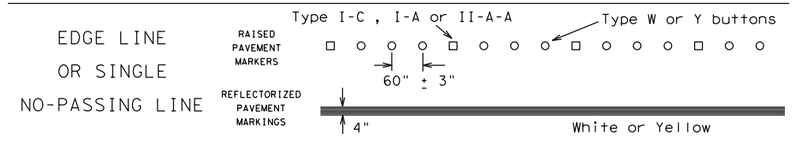

WIDE LINE

(FOR LEFT TURN CHANNELIZING LINE OR CHANNELIZING LINE USED TO DISCOURAGE LANE CHANGING.)

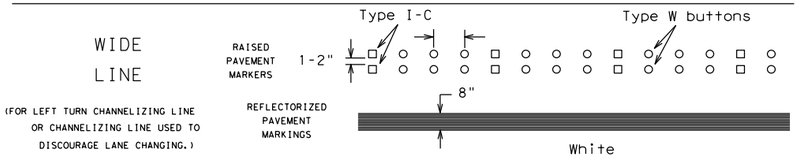

BROKEN LINES

CENTER LINE OR LANE LINE

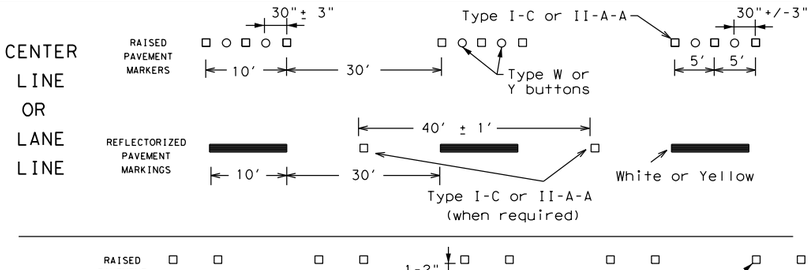

AUXILIARY OR LANEDROP LINE

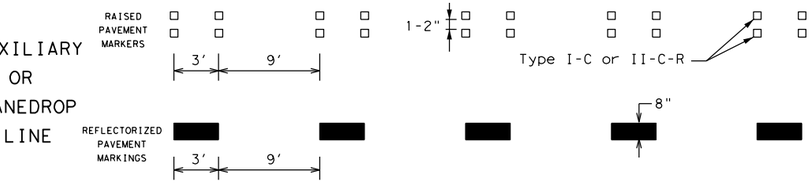

REMOVABLE MARKINGS WITH RAISED PAVEMENT MARKERS

If raised pavement markers are used to supplement REMOVABLE markings, the markers shall be applied to the top of the tape at the approximate mid length of tape used for broken lines or at 20 foot spacing for solid lines. This allows an easier removal of raised pavement markers and tape.

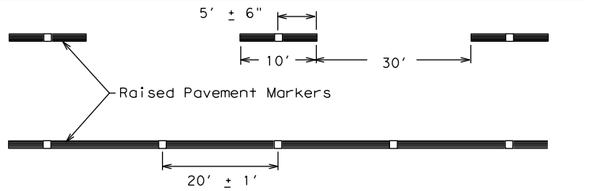

Centerline only - not to be used on edge lines

Raised pavement markers used as standard pavement markings shall be from the approved products list and meet the requirements of Item 672 "RAISED PAVEMENT MARKERS."

Texas Department of Transportation

Traffic Safety Division Standard

BARRICADE AND CONSTRUCTION PAVEMENT MARKING PATTERNS

BC(12)-21

FILE: bc-21.dgn	DN: TxDOT	CK: TxDOT	DW: TxDOT	CK: TxDOT
©TxDOT February 1998	CONT	SECT	JOB	HIGHWAY
REVISIONS 1-97 9-07 5-21 2-98 7-13 11-02 8-14	0337	01	053	SH 29
	DIST	COUNTY		SHEET NO.
	AUS	WILLIAMSON		59

DISCLAIMER:
The use of this standard is governed by the "Texas Engineering Practice Act". No warranty of any kind is made by TxDOT for any purpose whatsoever. TxDOT assumes no responsibility for the conversion of this standard to other formats or for incorrect results or damages resulting from its use.

DATE: 12/18/2025
FILE: pw://kh-pw.bentley.com:kh-pw-01/Documents/01 Active Projects/TX-GEO-069284005 - SH 29 Widening/4 - Design/Plan Set/2. TCP/STANDARDS/lpcb13.dgn

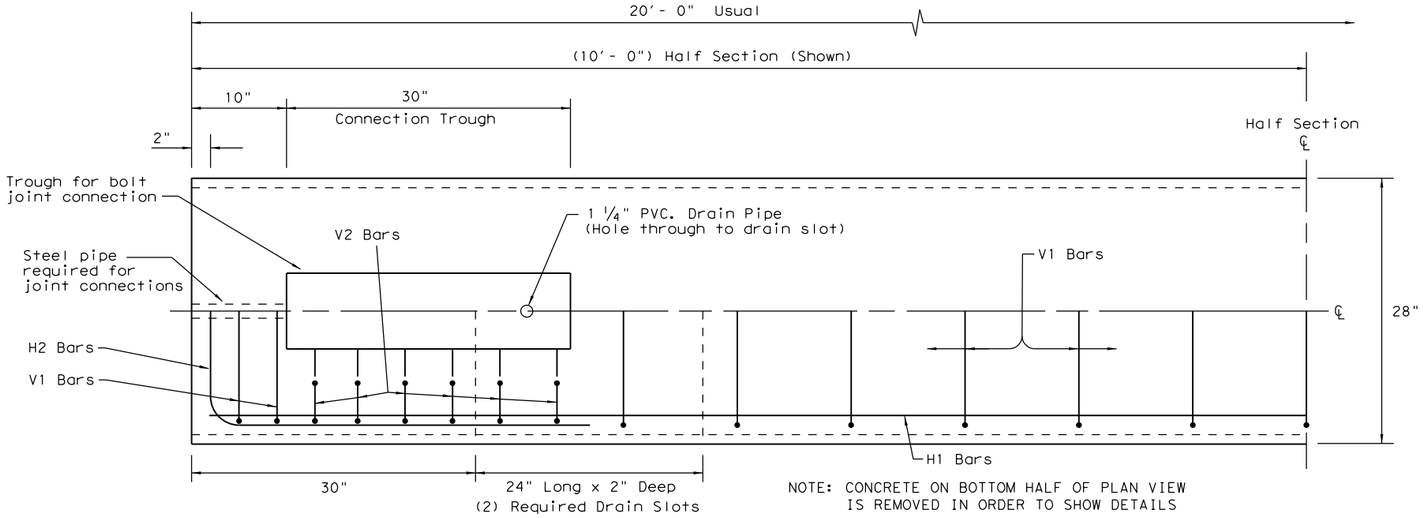

PLAN
(TYPE 1) BARRIER SEGMENT
(SYMMETRICAL ABOUT CENTER LINES)

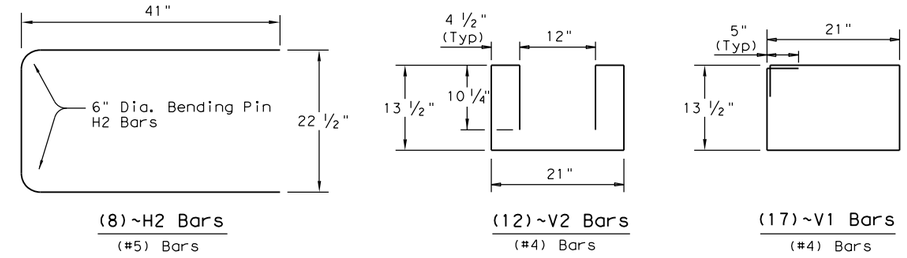

(8)~H2 Bars (#5) Bars

(12)~V2 Bars (#4) Bars

(17)~V1 Bars (#4) Bars

REINFORCING STEEL DETAILS
TYPE 1 - BARRIER SEGMENT

Note: Use 2" Dia. Bending Pin, unless otherwise shown

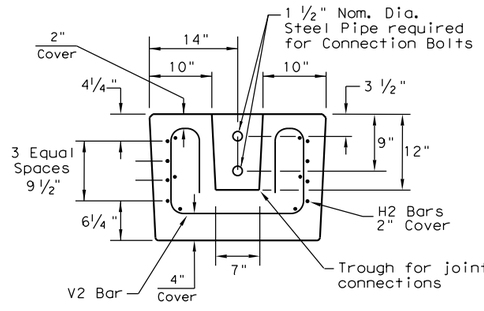

SECTION A-A

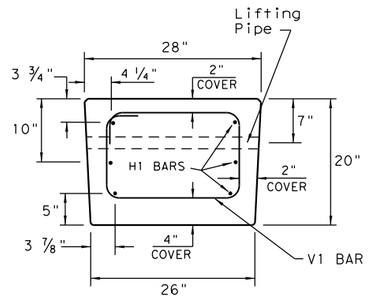

SECTION B-B

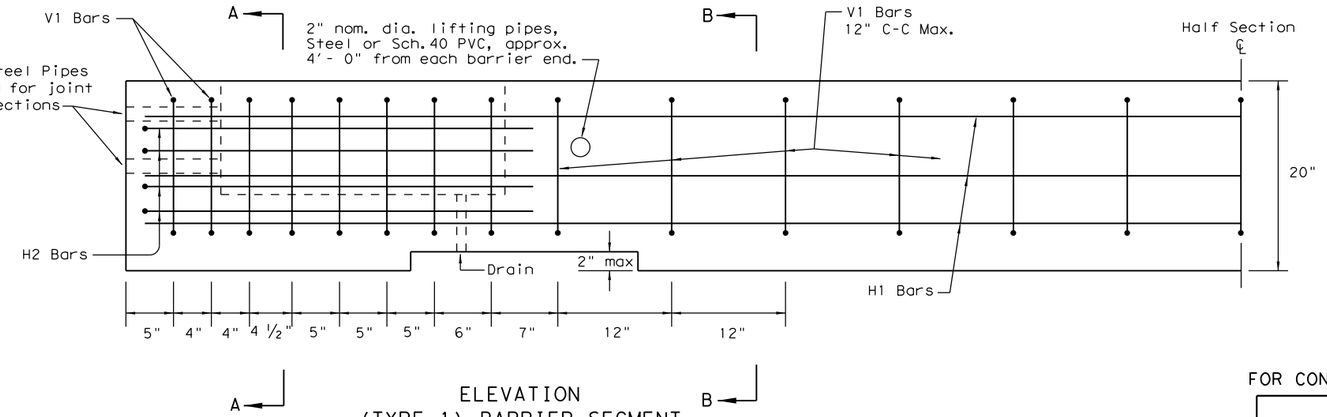

ELEVATION
(TYPE 1) BARRIER SEGMENT
(SYMMETRICAL ABOUT CENTER LINES)

GENERAL NOTES

1. Low Profile Concrete Barrier (LPCB), is approved for use in temporary work zone locations, where the posted speed is 45 mph, or less.
2. Concrete shall be Class H for precast barrier with a minimum compressive strength of 3,600 psi.
3. Where used, rebar reinforcement shall be Grade 60 and conform to ASTM A615.
4. Precast LPCB barrier length shall be 20 ft.
5. All barrier edges shall have ¾" chamfer or a tooled radius.
6. Joint connection hardware shall be in accordance with Item 449, "Anchor Bolts." and is considered subsidiary.
7. Steel pipe required for joint connection bolts shall be galvanized in accordance with Item 445,"Galvanizing."
8. Welded wire reinforcement (WWR) may be used in lieu of conventional reinforcement for Type 1 barrier, and shall meet the requirements shown.

FOR CONTRACTORS INFORMATION ONLY

(TYPE 1) APPROX. QUANTITIES 20 FT. SECTION		
CONCRETE	CY	2.6
REINFORCING STEEL	LBS	330
TOTAL BARRIER WT.	LBS	11000

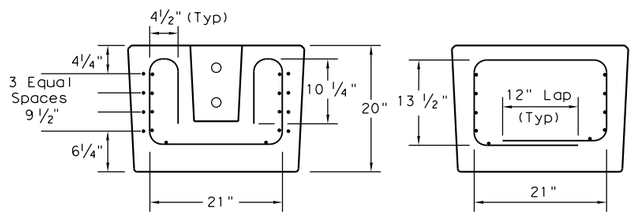

SECTION A-A

SECTION B-B

(WWR) GENERAL NOTES

1. Deformed Welded Wire Reinforcement shall conform to ASTM A497.
2. Welded wire cage may be cut or bent, if necessary, but must be approved by the Engineer.
3. Combinations of reinforcing steel and WWR are permitted, as directed by the Engineer. The dimensions from the end of the barrier section to the first wire shall not exceed 3".

REQUIRED (WWR) WIRE DESIGN

8 ~ (D31) Horizontal Wires (Equally spaced)
10 ~ (D20) Horizontal Wires (Equally spaced)
29 ~ (D20) Vertical Wires (Spaced as shown in Elevation View)

WELDED WIRE REINFORCEMENT (WWR)- OPTIONAL REINFORCING

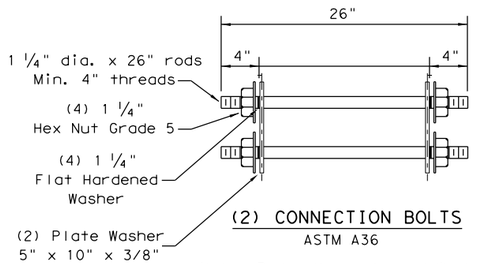

(2) CONNECTION BOLTS
ASTM A36

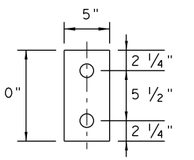

PLATE WASHER
5" x 10" x ⅜"

Note: Rods, Hex nuts and Washers shall be Galvanized.

SHEET 1 OF 2

Texas Department of Transportation

Design Division Standard

LOW PROFILE CONCRETE BARRIER
PRECAST BARRIER (TYPE 1)
LPCB-13

FILE: lpcb13.dgn	DN: TxDOT	CK: AM	DW: VP	CK:
©TxDOT December 2010	CONT	SECT	JOB	HIGHWAY
REVISIONS	0337	01	053	SH 29
	DIST	COUNTY		SHEET NO.
	AUS	WILLIAMSON		60

DISCLAIMER:
The use of this standard is governed by the "Texas Engineering Practice Act". No warranty of any kind is made by TxDOT for any purpose whatsoever. TxDOT assumes no responsibility for the conversion of this standard to other formats or for incorrect results or damages resulting from its use.

DATE: 12/18/2025
FILE: pw://kh-pw.bentley.com:kh-pw-01/Documents/01 Active Projects/TX-GEO-069284005 - SH 29 Widening/4 - Design/Plan Set/2. TCP/STANDARDS/lpcb13.dgn

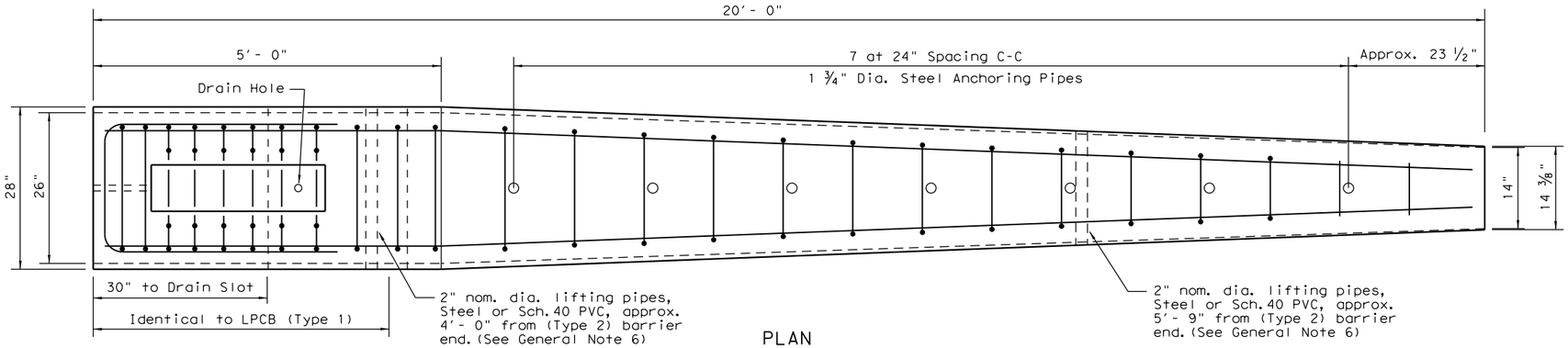

PLAN
(TYPE 2) END TERMINAL

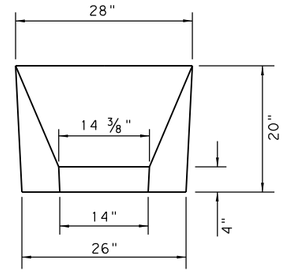

APPROACH VIEW

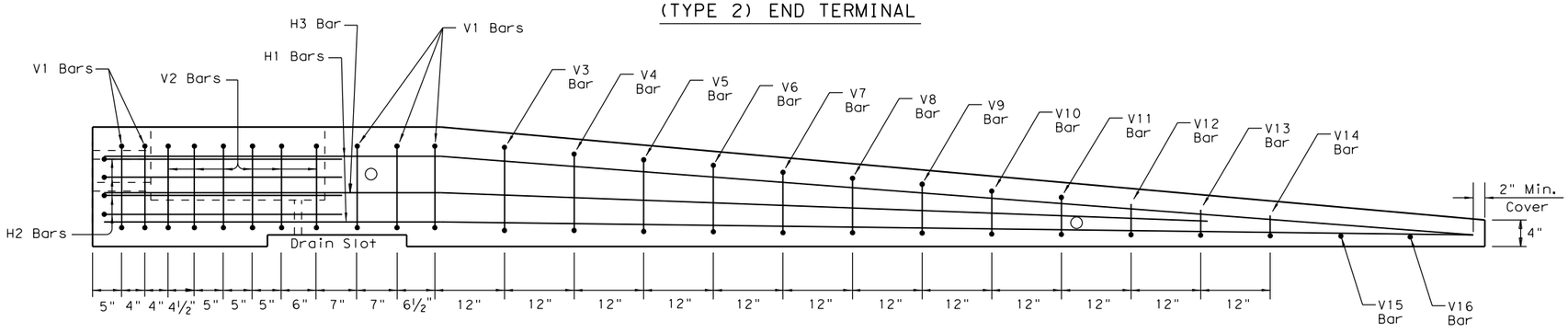

ELEVATION
(TYPE 2) END TERMINAL

Note:
Anchoring pipes not shown in Elevation View

TYPE 2 - NOTES

1. Welded wire reinforcment (WWR) is "not" an option for Type 2 Barrier.
2. Type 2 Barrier shall be used as an end treatment for the Type 1 barrier segments, when applicable.
3. The end treatment can be used without the anchor pins in locations that can accommodate approximately 4 ft. of lateral displacement of the end treatment. The use of non-pinned end treatment does not affect the performance or the deflection of the Low-Profile barrier system.
4. The anchor pins are all the same length and are to be driven flush with the top of the (Type 2) barrier surface.
5. The bends in the H3 and H1 bars are slight, no formal bend is necessary.
6. The Type 2 barrier segment must be lifted from the rear first, to prevent cracking of sloped section.
7. See LPCB sheet 1 for additional information.

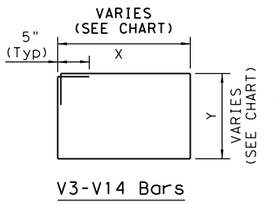

V3-V14 Bars

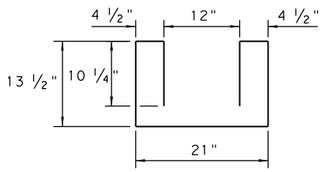

(6)~V2 Bars

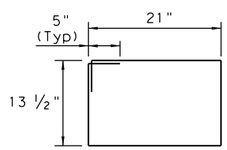

(5)~V1 Bars

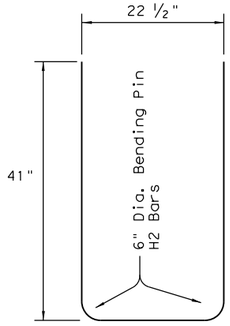

(4)~H2 Bars
(#5) Bars

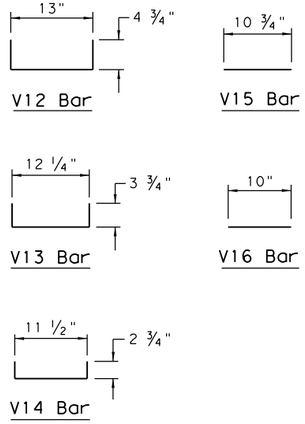

Note: All V Bars are (#4)

BAR(#4)	X (IN.)	Y (IN.)
V3 BAR	20 ¼	14 ½
V4 BAR	19 ½	13 ½
V5 BAR	18 ½	12 ¼
V6 BAR	17 ½	11 ¼
V7 BAR	17	10 ¼
V8 BAR	16 ¼	9
V9 BAR	15 ½	8
V10 BAR	14 ½	7
V11 BAR	13 ¾	6

REINFORCING STEEL DETAILS
TYPE 2 - END TERMINAL

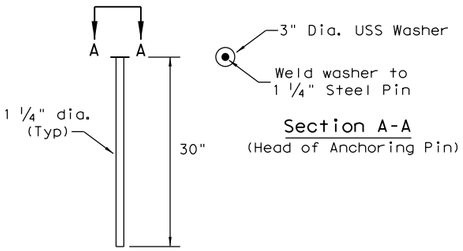

Section A-A
(Head of Anchoring Pin)

(7) Anchor Pins
ASTM A36 Steel
(See Note 3)

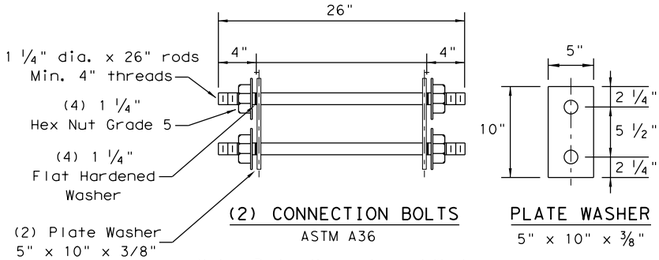

(2) CONNECTION BOLTS
ASTM A36

PLATE WASHER
5" x 10" x ⅜"

Note: Rods, Hex nuts and Washers shall be Galvanized.

Note: Use 2" Dia. Bending Pin, unless otherwise shown

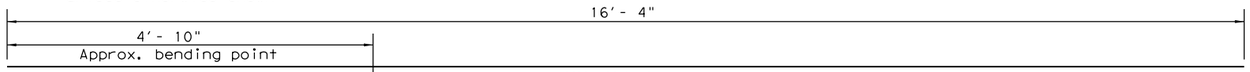

(2)~H3 Bars
(#5) Bar

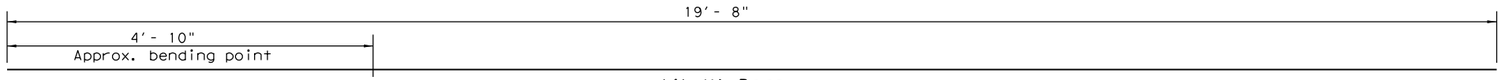

Note: Bends on H1 and H3 bars are slight and do not require formal bends.

(4)~H1 Bars
(#5) Bar

FOR CONTRACTORS INFORMATION ONLY

(TYPE 2) APPROX. QUANTITIES	20 FT. SECTION	
CONCRETE	CY	1.65
REINFORCING STEEL	LBS	240
TOTAL BARRIER WT.	LBS	7000

Texas Department of Transportation
Design Division Standard

LOW PROFILE CONCRETE BARRIER
PRECAST BARRIER (TYPE 2)
LPCB-13

FILE: lpcb13.dgn	DN: TxDOT	CK: AM	DW: VP	CK:
© TxDOT December 2010	CONT	SECT	JOB	HIGHWAY
REVISIONS	0337	01	053	SH 29
	DIST	COUNTY		SHEET NO.
	AUS	WILLIAMSON		61

DISCLAIMER:
The use of this standard is governed by the "Texas Engineering Practice Act". No warranty of any kind is made by TxDOT for any purpose whatsoever. TxDOT assumes no responsibility for the conversion of this standard to other formats or for incorrect results from its use.

DATE: 12/18/2025 1:49:38 PM
FILE: pw://kn-pw.bentley.com:kn-pw-01/Documents/01 Active Projects/TX-GEO-0692840/05 Roadway Design/Part 6/Sht TCP 1-5 ANDAR05_Feb11.dgn

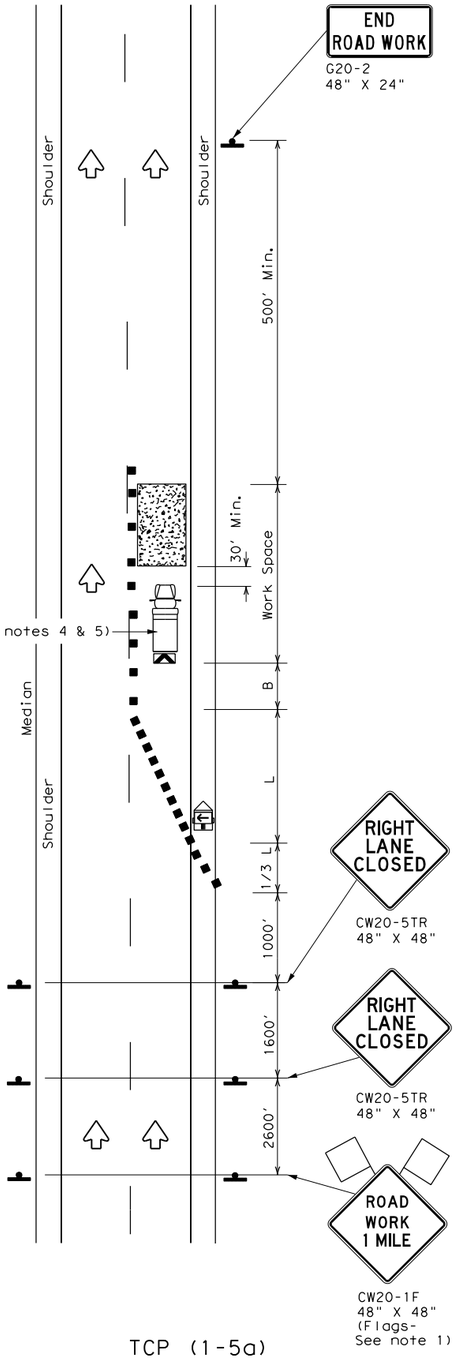

TCP (1-5a)

ONE LANE CLOSURE

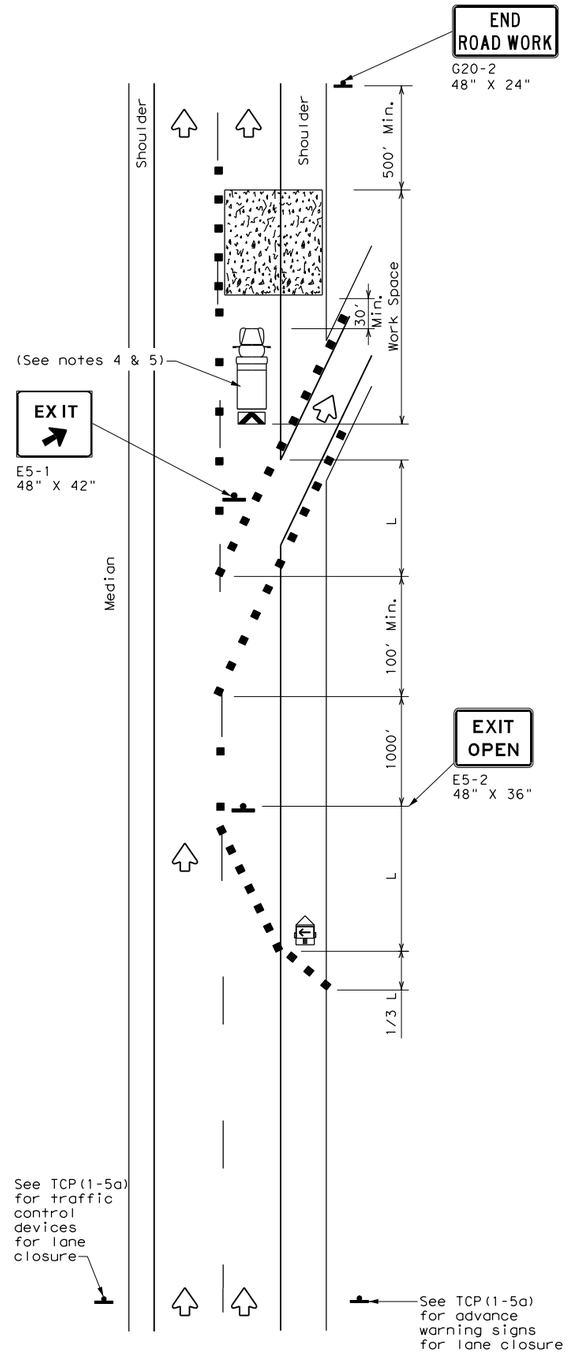

TCP (1-5b)

LANE CLOSURE NEAR EXIT RAMPS

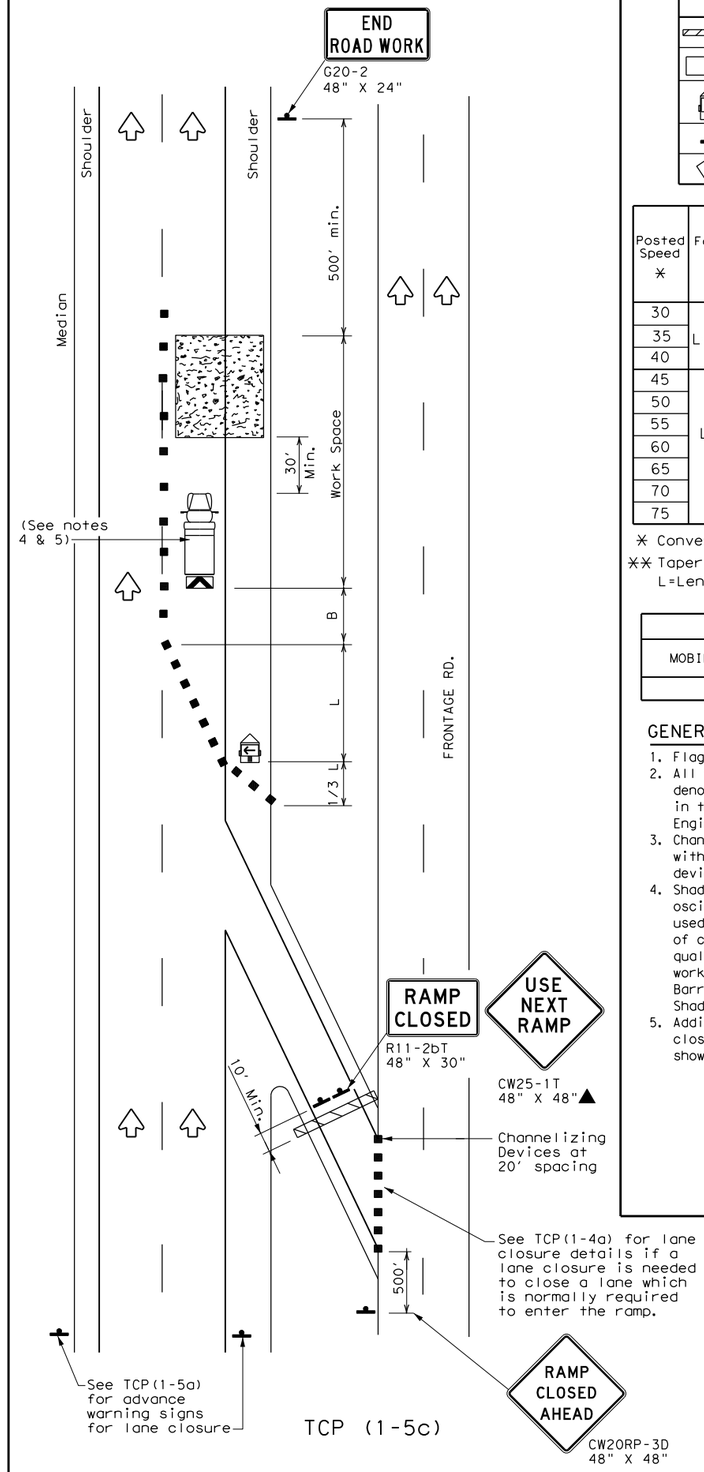

TCP (1-5c)

LANE CLOSURE NEAR ENTRANCE RAMPS

LEGEND			
	Type 3 Barricade		Channelizing Devices
	Heavy Work Vehicle		Truck Mounted Attenuator (TMA)
	Trailer Mounted Flashing Arrow Board	M	Portable Changeable Message Sign (PCMS)
	Sign		Traffic Flow
	Flag		Flagger

Posted Speed *	Formula	Minimum Desirable Taper Lengths ** 10' Offset	11' Offset	12' Offset	Suggested Maximum Spacing of Channelizing Devices: On a Taper	On a Tangent	Minimum Sign Spacing "X" Distance	Suggested Longitudinal Buffer Space "B"
30	$L=\frac{WS^2}{60}$	150'	165'	180'	30'	60'	120'	90'
35		205'	225'	245'	35'	70'	160'	120'
40		265'	295'	320'	40'	80'	240'	155'
45	L=WS	450'	495'	540'	45'	90'	320'	195'
50		500'	550'	600'	50'	100'	400'	240'
55		550'	605'	660'	55'	110'	500'	295'
60		600'	660'	720'	60'	120'	600'	350'
65		650'	715'	780'	65'	130'	700'	410'
70		700'	770'	840'	70'	140'	800'	475'
75		750'	825'	900'	75'	150'	900'	540'

* Conventional Roads Only

** Taper lengths have been rounded off.
L=Length of Taper(FT) W=Width of Offset(FT) S=Posted Speed(MPH)

TYPICAL USAGE				
MOBILE	SHORT DURATION	SHORT TERM STATIONARY	INTERMEDIATE TERM STATIONARY	LONG TERM STATIONARY
		✓		

GENERAL NOTES

1. Flags attached to signs where shown, are REQUIRED.
2. All traffic control devices illustrated are REQUIRED, except those denoted with the triangle symbol may be omitted when stated elsewhere in the plans, or for routine maintenance work, when approved by the Engineer.
3. Channelizing devices used to close lanes may be supplemented with the Chevron Alignment Sign placed on every other channelizing device. Chevrons may be attached to plastic drums as per BC Standards.
4. Shadow Vehicle with TMA and high intensity rotating, flashing, oscillating or strobe lights. A Shadow Vehicle with a TMA should be used anytime it can be positioned 30 to 100 feet in advance of the area of crew exposure without adversely affecting the performance or quality of the work. If workers are no longer present but road or work conditions require the traffic control to remain in place, Type 3 Barricades or other channelizing devices may be substituted for the Shadow Vehicle and TMA.
5. Additional Shadow Vehicles with TMAs may be positioned in each closed lane, on the shoulder or off the paved surface, next to those shown in order to protect a wider work space.

Texas Department of Transportation

Traffic Operations Division Standard

TRAFFIC CONTROL PLAN LANE CLOSURES FOR DIVIDED HIGHWAYS

TCP(1-5)-18

FILE: tcp1-5-18.dgn	DN:	CK:	DW:	CK:
©TxDOT February 2012	CONT	SECT	JOB	HIGHWAY
REVISIONS 2-18	0337	01	053	SH 29
	DIST	COUNTY		SHEET NO.
	AUS	WILLIAMSON		62

DISCLAIMER:
The use of this standard is governed by the "Texas Engineering Practice Act". No warranty of any kind is made by TxDOT for any purpose whatsoever. TxDOT assumes no responsibility for the conversion of this standard to other formats or for incorrect results or damages resulting from its use.

DATE: 12/18/2025 1:49:57 PM
FILE: pw://kh-pw.bentley.com:kh-pw-01/Documents/01 Active Projects/TX-GEO-069284/05 Design/Plans Design/Part 2/Sub Part 4/TCP (2-4)-18.dgn

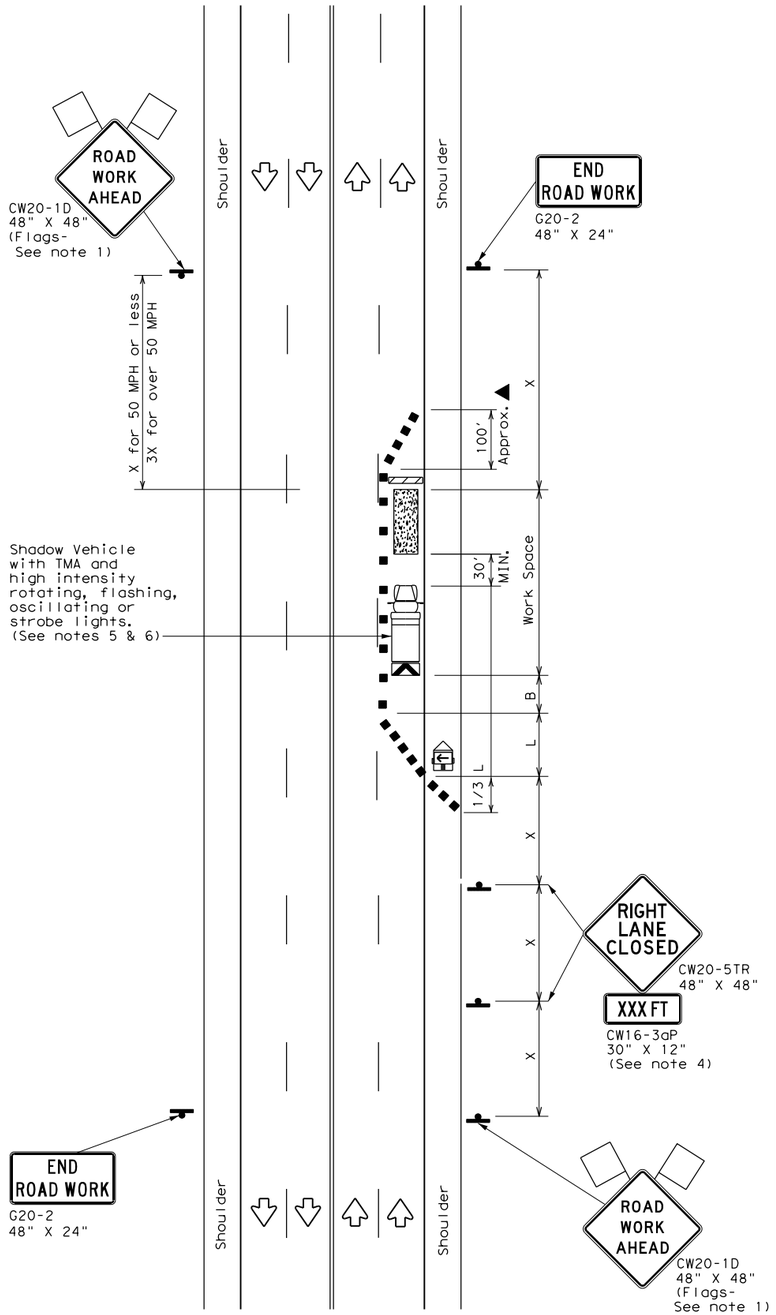

TCP (2-4a)

ONE LANE CLOSED

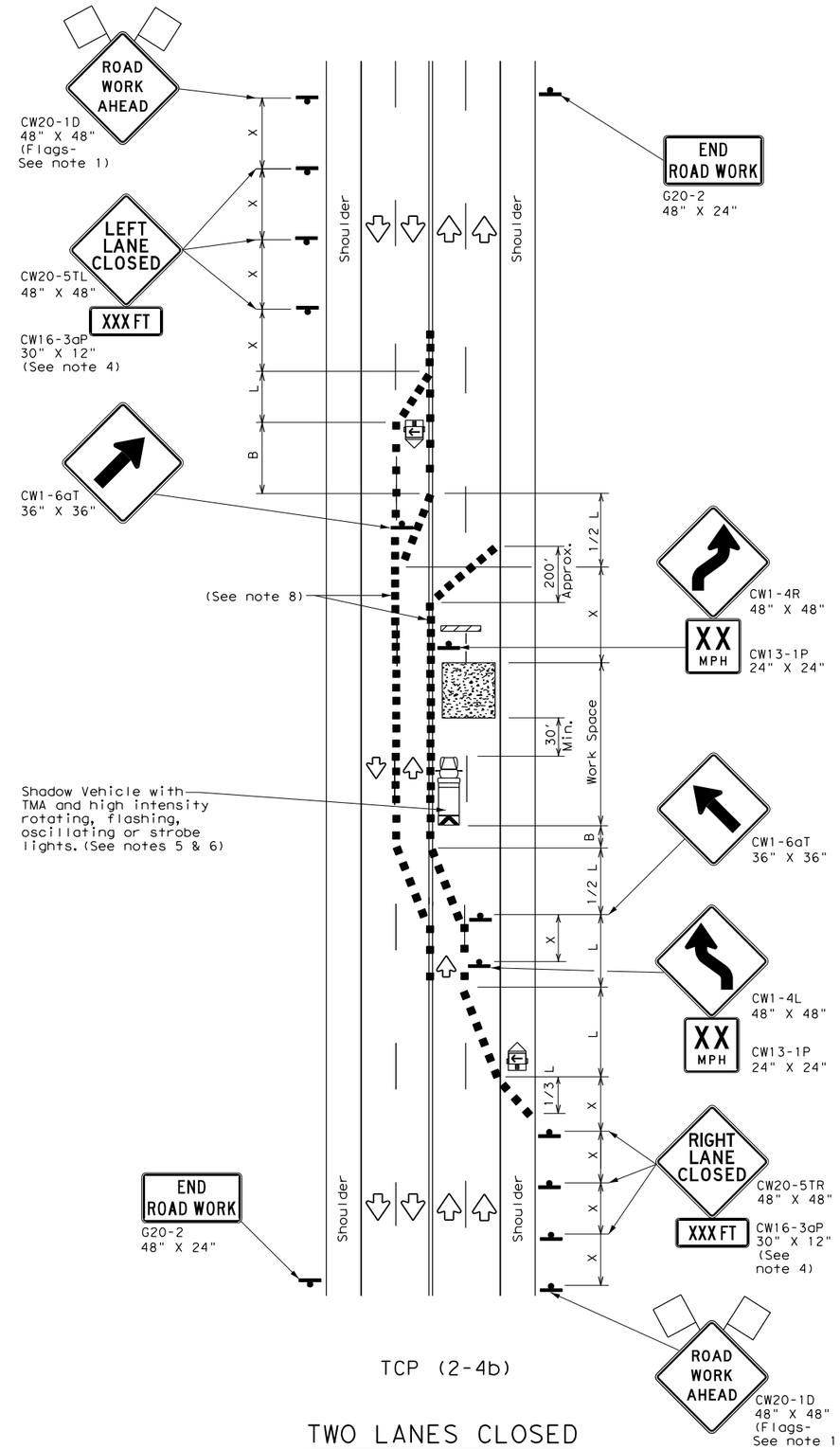

TCP (2-4b)

TWO LANES CLOSED

LEGEND			
	Type 3 Barricade		Channelizing Devices
	Heavy Work Vehicle		Truck Mounted Attenuator (TMA)
	Trailer Mounted Flashing Arrow Board	M	Portable Changeable Message Sign (PCMS)
	Sign		Traffic Flow
	Flag		Flagger

Posted Speed *	Formula	Minimum Desirable Taper Lengths ** 10' Offset	11' Offset	12' Offset	Suggested Maximum Spacing of Channelizing Devices: On a Taper	On a Tangent	Minimum Sign Spacing "X" Distance	Suggested Longitudinal Buffer Space "B"
30	$L=\frac{WS^2}{60}$	150'	165'	180'	30'	60'	120'	90'
35		205'	225'	245'	35'	70'	160'	120'
40		265'	295'	320'	40'	80'	240'	155'
45	L=WS	450'	495'	540'	45'	90'	320'	195'
50		500'	550'	600'	50'	100'	400'	240'
55		550'	605'	660'	55'	110'	500'	295'
60		600'	660'	720'	60'	120'	600'	350'
65		650'	715'	780'	65'	130'	700'	410'
70		700'	770'	840'	70'	140'	800'	475'
75		750'	825'	900'	75'	150'	900'	540'

* Conventional Roads Only

** Taper lengths have been rounded off.
L=Length of Taper(FT) W=Width of Offset(FT) S=Posted Speed(MPH)

TYPICAL USAGE				
MOBILE	SHORT DURATION	SHORT TERM STATIONARY	INTERMEDIATE TERM STATIONARY	LONG TERM STATIONARY
		✓	✓	

GENERAL NOTES

1. Flags attached to signs where shown, are REQUIRED.
2. All traffic control devices illustrated are REQUIRED, except those denoted with the triangle symbol may be omitted when stated elsewhere in the plans, or for routine maintenance work, when approved by the Engineer.
3. The downstream taper is optional. When used, it should be 100 feet minimum length per lane.
4. For short term applications, when post mounted signs are not used, the distance legend may be shown on the sign face rather than on a CW16-3aP supplemental plaque.
5. A Shadow Vehicle with a TMA should be used anytime it can be positioned 30 to 100 feet in advance of the area of crew exposure without adversely affecting the performance or quality of the work. If workers are no longer present but road or work conditions require the traffic control to remain in place, Type 3 Barricades or other channelizing devices may be substituted for the Shadow Vehicle and TMA.
6. Additional Shadow Vehicles with TMAs may be positioned in each closed lane, on the shoulder or off the paved surface, next to those shown in order to protect a wider work space.

TCP (2-4a)

7. If this TCP is used for a left lane closure, CW20-5TL "LEFT LANE CLOSED"signs shall be used and channelizing devices shall be placed on the centerline to protect the work space from opposing traffic with the arrow board placed in the closed lane near the end of the merging taper.

TCP (2-4b)

8. For shorter durations where traffic is directed over a yellow centerline, channelizing devices which separate two-way traffic should be spaced on tapers at 20' or 15' if posted speeds are 35 mph or slower, and for tangent sections, at 1/2(S) where S is the speed in mph. This tighter devices spacing is intended for the area of conflicting markings, not the entire work zone.

Texas Department of Transportation

Traffic Operations Division Standard

TRAFFIC CONTROL PLAN LANE CLOSURES ON MULTILANE CONVENTIONAL ROADS

TCP(2-4)-18

FILE: tcp2-4-18.dgn	DN:	CK:	DW:	CK:
© TxDOT December 1985	CONT	SECT	JOB	HIGHWAY
REVISIONS	0337	01	053	SH 29
8-95 3-03	DIST	COUNTY		SHEET NO.
1-97 2-12	AUS	WILLIAMSON		63
4-98 2-18				

DISCLAIMER:
The use of this standard is governed by the "Texas Engineering Practice Act". No warranty of any kind is made by TxDOT for any purpose whatsoever. TxDOT assumes no responsibility for the conversion of this standard to other formats or for incorrect results or damages resulting from its use.

DATE: 12/18/2025 1:50:18 PM
FILE: pw://kn-pw.bentley.com:kn-pw-01/Documents/01 Active Projects/TX-GEO-069218 05 Design/Plans Design/Part 7/Sheets/TCP (2-5)-18.dgn

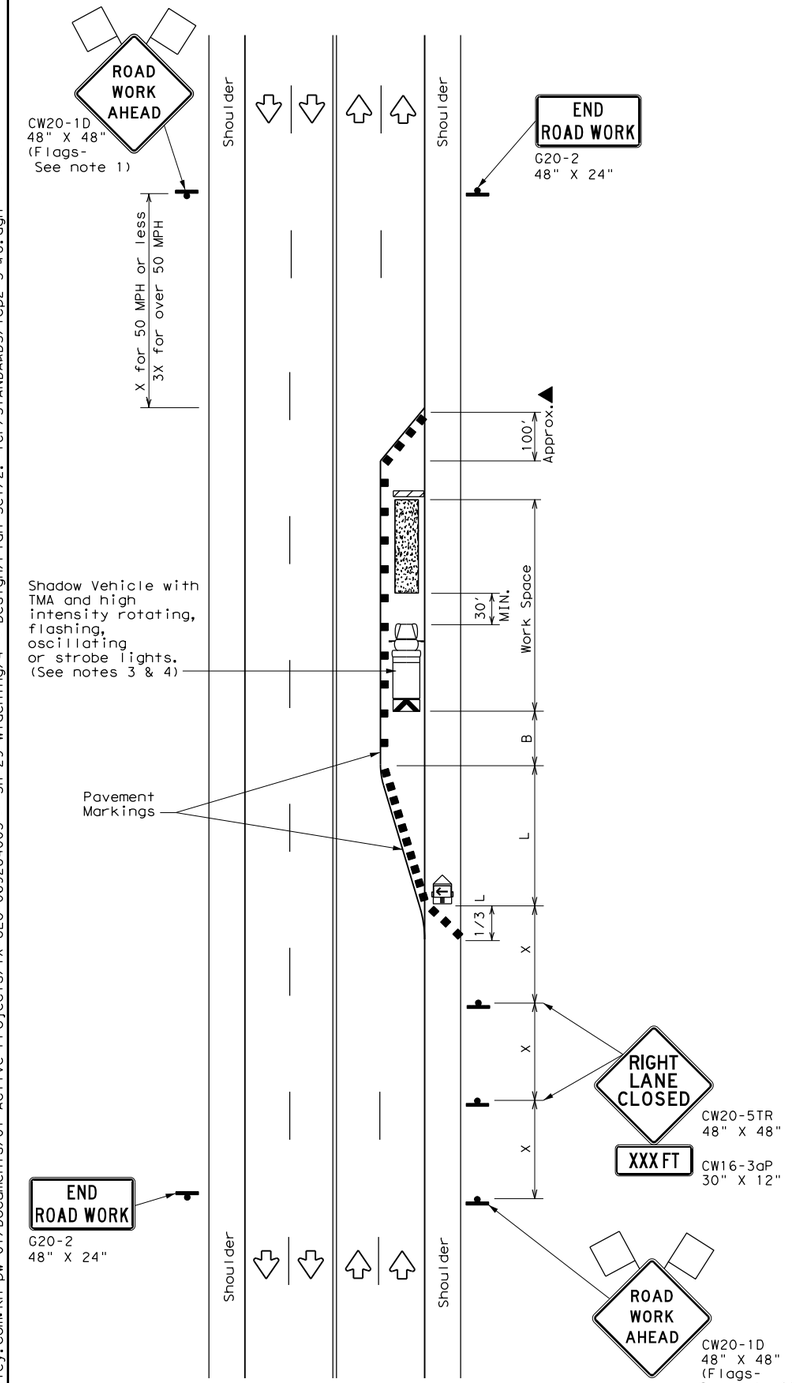

TCP (2-5a)

ONE LANE CLOSED

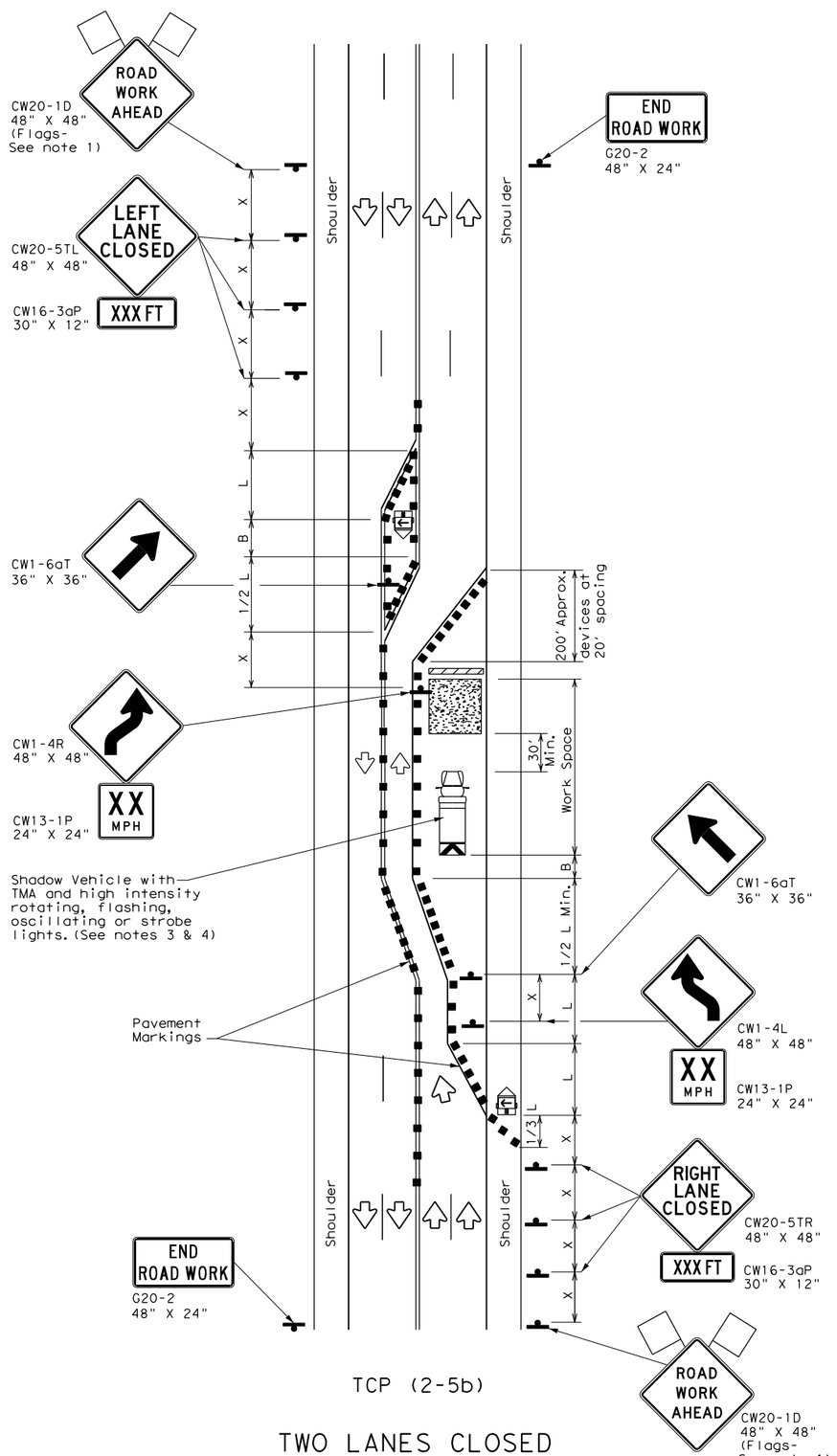

TCP (2-5b)

TWO LANES CLOSED

LEGEND			
	Type 3 Barricade		Channelizing Devices
	Heavy Work Vehicle		Truck Mounted Attenuator (TMA)
	Trailer Mounted Flashing Arrow Board	M	Portable Changeable Message Sign (PCMS)
	Sign		Traffic Flow
	Flag		Flagger

Posted Speed *	Formula	Minimum Desirable Taper Lengths ** 10' Offset	11' Offset	12' Offset	Suggested Maximum Spacing of Channelizing Devices: On a Taper	On a Tangent	Minimum Sign Spacing "X" Distance	Suggested Longitudinal Buffer Space "B"
30	$L = \frac{WS^2}{60}$	150'	165'	180'	30'	60'	120'	90'
35		205'	225'	245'	35'	70'	160'	120'
40		265'	295'	320'	40'	80'	240'	155'
45	L = WS	450'	495'	540'	45'	90'	320'	195'
50		500'	550'	600'	50'	100'	400'	240'
55		550'	605'	660'	55'	110'	500'	295'
60		600'	660'	720'	60'	120'	600'	350'
65		650'	715'	780'	65'	130'	700'	410'
70		700'	770'	840'	70'	140'	800'	475'
75		750'	825'	900'	75'	150'	900'	540'

* Conventional Roads Only

** Taper lengths have been rounded off.
L=Length of Taper(FT) W=Width of Offset(FT) S=Posted Speed(MPH)

TYPICAL USAGE				
MOBILE	SHORT DURATION	SHORT TERM STATIONARY	INTERMEDIATE TERM STATIONARY	LONG TERM STATIONARY
			✓	✓

GENERAL NOTES

1. Flags attached to signs where shown, are REQUIRED.
2. All traffic control devices illustrated are REQUIRED, except those denoted with the triangle symbol may be omitted when stated elsewhere in the plans, or for routine maintenance work, when approved by the Engineer.
3. A Shadow Vehicle with a TMA should be used anytime it can be positioned 30 to 100 feet in advance of the area of crew eposure without adversely affecting the performance or quality of the work. If workers are no longer present but road or work conditions require the traffic control to remain in place, Type 3 Barricades or other channelizing devices may be substitutued for the Shadow Vehicle and TMA.
4. Additional Shadow Vehicles with TMAs may be positioned in each closed lane, on the shoulder or off the paved surface, next to those shown in order to protect a wider work space.
5. The downstream taper is optional. When used, it should be 100 feet approximately per lane, with channelizing devices spaced at 20 feet.

TCP (2-5a)

6. If this TCP is used for a left lane closure, CW20-5TL "LEFT LANE CLOSED" signs shall be used and channelizing devices shall be placed on the centerline to protect the work space from opposing traffic, with the arrow board placed in the closed lane near the end of the merging taper.

TCP (2-5b)

7. Conflicting pavement markings shall be removed for long-term projects.

Texas Department of Transportation

Traffic Operations Division Standard

TRAFFIC CONTROL PLAN
LONG TERM LANE CLOSURES
MULTILANE CONVENTIONAL RDS.

TCP(2-5)-18

FILE: tcp2-5-18.dgn	DN:	CK:	DW:	CK:
©TxDOT December 1985	CONT	SECT	JOB	HIGHWAY
REVISIONS 8-95 2-12	0337	01	053	SH 29
1-97 3-03	DIST	COUNTY		SHEET NO.
4-98 2-18	AUS	WILLIAMSON		64

165

DISCLAIMER:
The use of this standard is governed by the "Texas Engineering Practice Act". No warranty of any kind is made by TxDOT for any purpose whatsoever. TxDOT assumes no responsibility for the conversion of this standard to other formats or for incorrect results or damages resulting from its use.

DATE:
FILE:

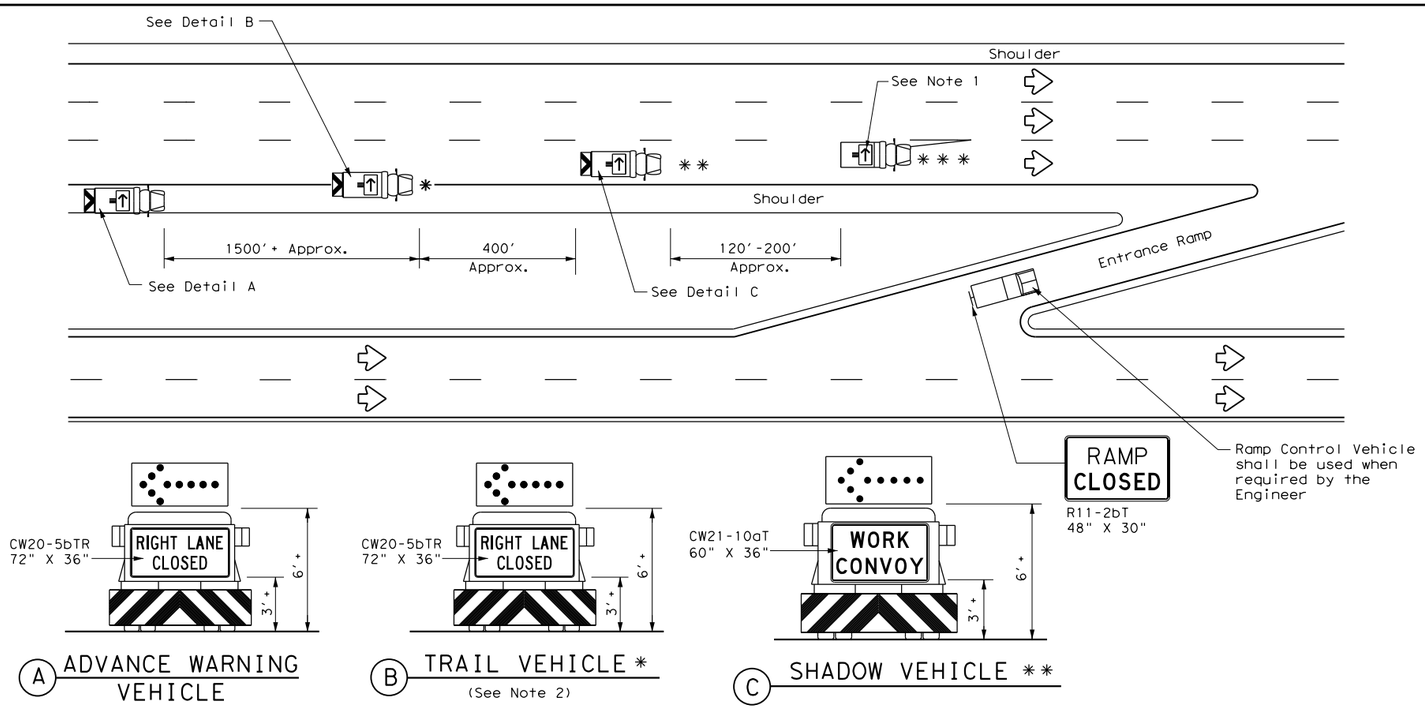

RIGHT LANE CLOSURE ON DIVIDED HIGHWAY - TCP(3-2a)

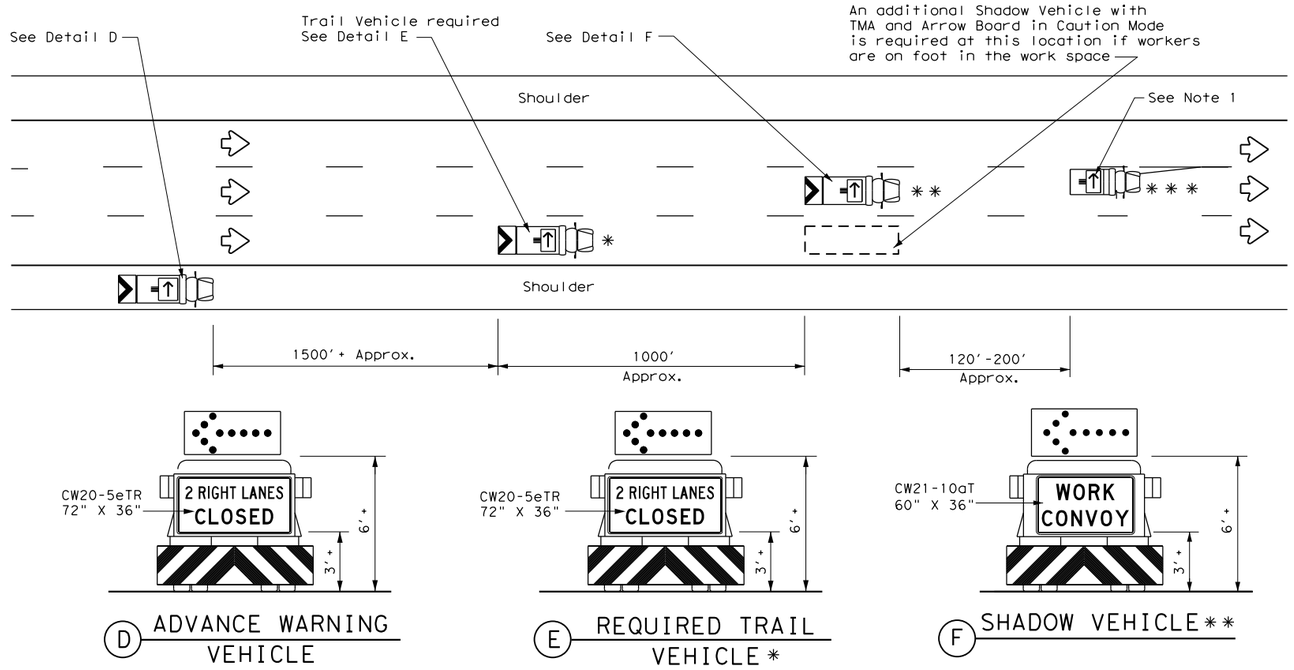

INTERIOR LANE CLOSURE ON MULTI-LANE DIVIDED HIGHWAY - TCP(3-2b)

LEGEND

*	Trail Vehicle	ARROW BOARD DISPLAY	
**	Shadow Vehicle		
***	Work Vehicle		RIGHT Directional
	Heavy Work Vehicle		LEFT Directional
	Truck Mounted Attenuator (TMA)		Double Arrow
	Traffic Flow		CAUTION (Alternating Diamond or 4 Corner Flash)

TYPICAL USAGE				
MOBILE	SHORT DURATION	SHORT TERM STATIONARY	INTERMEDIATE TERM STATIONARY	LONG TERM STATIONARY
✓				

GENERAL NOTES

1. ADVANCE WARNING, TRAIL and SHADOW vehicles shall be equipped with Type B or Type C flashing arrow boards as per the Barricade and Construction (BC) standards. Arrow boards on WORK vehicles will be optional based on the type of work being performed. The arrow boards shall be operated from inside the vehicle.
2. For TCP(3-2a) the Engineer will determine if the TRAIL VEHICLE is required based on prevailing roadway conditions, traffic volume, and sight distance restrictions. All other vehicles shown for both TCP(3-2a) and TCP(3-2b) are required.
3. The use of amber high intensity rotating, flashing, oscillating, or strobe lights on vehicles are required. Blue high intensity rotating, flashing, oscillating or strobe lights when mounted on the driver's side of the vehicle may be operated simultaneously with the amber beacons or strobe lights.
4. The use of truck mounted attenuators (TMA) on the ADVANCE WARNING, SHADOW, and TRAIL vehicles are required.
5. Reflective sheeting on the rear of the TMA shall meet or exceed the reflectivity and color requirements of DMS 8300, Type A.
6. Each vehicle shall have two-way radio communication capability.
7. When work convoys must change lanes, the TRAIL VEHICLE should change lanes first to shadow the other convoy vehicles.
8. Vehicle spacing between the TRAIL VEHICLE and the SHADOW VEHICLE will vary depending on sight distance restrictions. Motorists approaching the work convoy should be able to see the TRAIL VEHICLE in time to slow down and/or change lanes as they approach the TRAIL VEHICLE. Vehicle spacing between the WORK VEHICLE and SHADOW VEHICLE may vary according to terrain, work activity and other factors.
9. Standard 48" X 48" diamond shaped warning signs with the same message as those shown may be used where adequate mounting space exists.
10. The signs shown should be used on the Advance Warning Vehicle. As an option, a portable changeable message sign (PCMS) or a truck mounted changeable message sign (TMCMS) with a minimum character height of 12", and displaying the same legend may be substituted for these signs. An appropriate directional arrow display, simulating the size and legibility of the flashing arrow board, must be used in the second phase of the PCMS/TMCMS message. When this is done, the arrow board will not be required on the Advance Warning Vehicle.
11. Standard diamond shape versions of the CW20-5 series signs may be used as an option if the rectangular signs shown are not available.
12. The principles on this sheet may be used to close lanes from the left side of the roadway considering the number of lanes, shoulder width, sight distance, and ramp frequency.
13. Signs and flashing arrow board modes shall be appropriately altered when implementing left lane closures or interior closures which close the left lanes.
14. The Advance Warning Vehicle may straddle the edgeline when shoulder width makes it necessary.

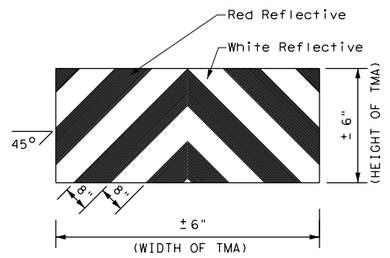

STRIPING FOR TMA

Texas Department of Transportation

Traffic Operations Division Standard

TRAFFIC CONTROL PLAN MOBILE OPERATIONS DIVIDED HIGHWAYS

TCP(3-2)-13

FILE: tcp3-2.dgn	DN: TxDOT	CK: TxDOT	DW: TxDOT	CK: TxDOT
© TxDOT December 1985	CONT	SECT	JOB	HIGHWAY
REVISIONS 2-94 4-98 8-95 7-13 1-97	0337	01	053	SH 29
	DIST	COUNTY		SHEET NO.
	AUS	WILLIAMSON		65

176

DISCLAIMER:
The use of this standard is governed by the "Texas Engineering Practice Act". No warranty of any kind is made by TxDOT for any purpose whatsoever. TxDOT assumes no responsibility for the conversion of this standard for any purpose whatsoever. TxDOT assumes no responsibility for the conversion made by TxDOT from its use.
DATE: 12/18/2025 1:50:56 PM
FILE: pw://kn-pw.bentley.com:kn-pw-01/Documents/01 Active Projects/TX-GEO-0692814/05 Design/Prefer Set/Sheets/TCP(3-3)-14.dgn

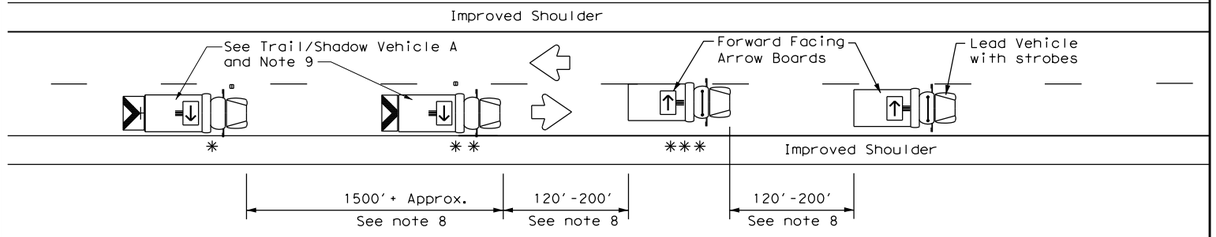

TCP (3-3a)

TWO LANE HIGHWAY WITH PAVED SHOULDERS (WORK ON TRAVEL LANE)

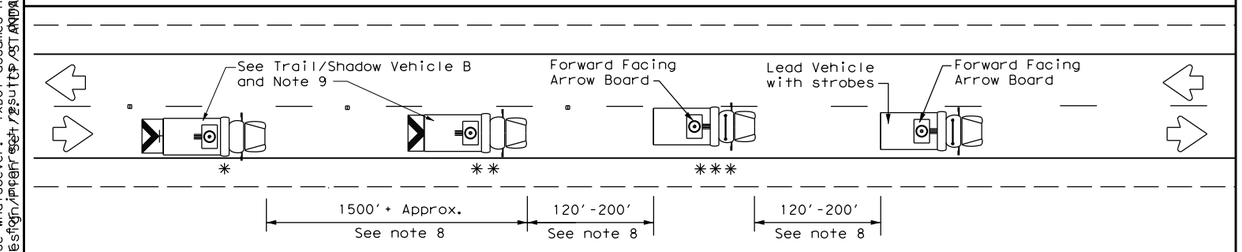

TCP (3-3b)

TWO LANE HIGHWAY WITHOUT PAVED SHOULDERS (WORK ON TRAVEL LANE)

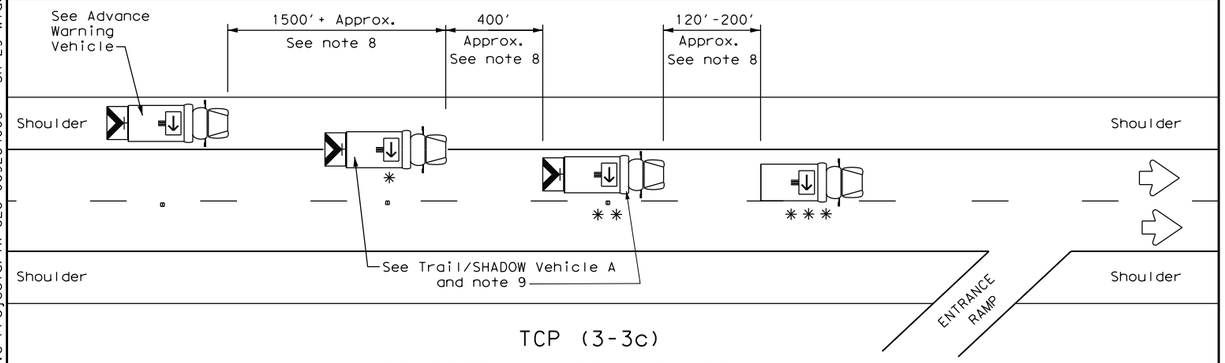

TCP (3-3c)

DIVIDED MULTILANE HIGHWAY

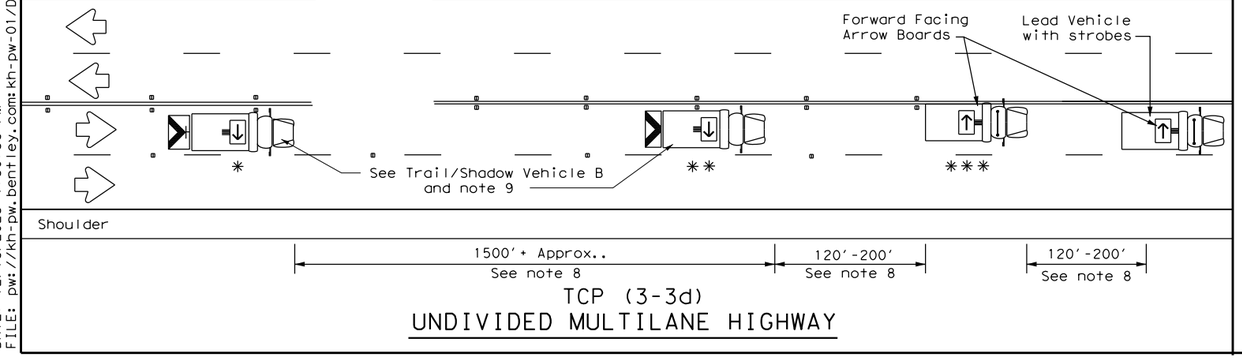

TCP (3-3d)

UNDIVIDED MULTILANE HIGHWAY

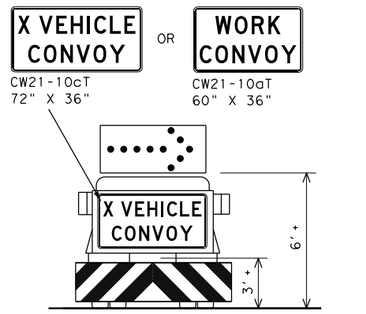

TRAIL/SHADOW VEHICLE A

with RIGHT Directional display
Flashing Arrow Board

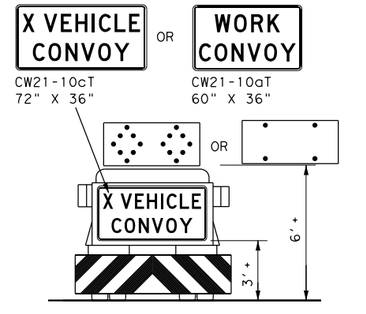

TRAIL/SHADOW VEHICLE B

with Flashing Arrow Board
in Caution Mode

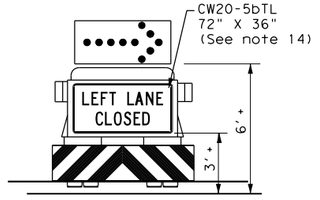

ADVANCE WARNING VEHICLE

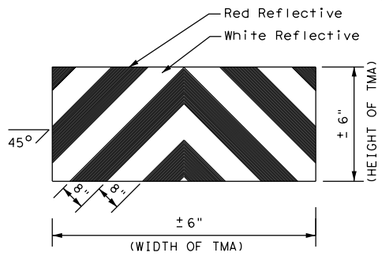

STRIPING FOR TMA

LEGEND			
*	Trail Vehicle	ARROW BOARD DISPLAY	
**	Shadow Vehicle		
***	Work Vehicle		RIGHT Directional
	Heavy Work Vehicle		LEFT Directional
	Truck Mounted Attenuator (TMA)		Double Arrow
	Traffic Flow		CAUTION (Alternating Diamond or 4 Corner Flash)

TYPICAL USAGE				
MOBILE	SHORT DURATION	SHORT TERM STATIONARY	INTERMEDIATE TERM STATIONARY	LONG TERM STATIONARY
✓				

GENERAL NOTES

1. TRAIL, SHADOW, and LEAD vehicles shall be equipped with arrow boards as illustrated. When a LEAD vehicle is not used on two way roads the WORK vehicle must have an arrow board. For divided roadways, the arrow board on the WORK vehicle is optional based on the type of work being performed. The Engineer will determine if the LEAD vehicle and/or TRAIL vehicle are required based on prevailing roadway conditions, traffic volume, and sight distance restrictions.
2. The use of amber high intensity rotating, flashing, oscillating, or strobe lights on vehicles are required. Blue high intensity rotating, flashing, oscillating, or strobe lights when mounted on the driver's side of the vehicle may be operated simultaneously with the amber beacons or strobe lights.
3. The use of truck mounted attenuators (TMA) on the SHADOW VEHICLE, ADVANCE WARNING and TRAIL VEHICLE are required.
4. Reflective sheeting on the rear of the TMA shall meet or exceed the reflectivity and color requirements of DEPARTMENTAL MATERIAL SPECIFICATION DMS 8300, Type A.
5. Flashing arrow boards shall be Type B or Type C as per the Barricade and Construction (BC) standards. The board shall be controlled from inside the vehicle.
6. Each vehicle shall have two-way radio communication capability.
7. When work convoys must change lanes, the TRAIL VEHICLE should change lanes first to shadow the other convoy vehicles.
8. Vehicle spacing between the TRAIL VEHICLE and the SHADOW VEHICLE will vary depending on sight distance restrictions. Motorists approaching the convoy should be able to see the TRAIL VEHICLE in time to slow down and/or change lanes as they approach the TRAIL VEHICLE. Vehicle spacing between the WORK VEHICLE and SHADOW VEHICLE and vehicle spacing between WORK VEHICLE and LEAD VEHICLE may vary according to terrain, work activity and other factors.
9. X VEHICLE CONVOY (CW21-10cT) or WORK CONVOY (CW21-10aT) signs shall be used on TRAIL VEHICLES and SHADOW VEHICLES as shown. As an option 48" x 48" diamond shaped WORK CONVOY (CW21-10T) or X VEHICLE CONVOY (CW21-10bT) signs may be used where adequate mounting space exists. When used, the X VEHICLE CONVOY sign shall have the number of the convoy vehicles displayed on the sign in the number designation "X" location. The X VEHICLE CONVOY sign shall not be used on the SHADOW VEHICLE if a TRAIL VEHICLE is used.
10. For divided highways with two or three lanes in one direction, the appropriate LEFT LANE CLOSED (CW20-5bTL), RIGHT LANE CLOSED (CW20-5bTR), or CENTER LANE CLOSED (CW20-5dT) sign should be used on the Advance Warning Vehicle. As an option, a portable changeable message sign (PCMS) or truck mounted changeable message sign (TMCMS) with a minimum character height of 12", and displaying the same legend may be substituted for these signs. An appropriate directional arrow display, simulating the size and legibility of the flashing arrow board may be used in the second phase of the PCMS/TMCMS message. When this is done, the arrow board will not be required on the Advance Warning Vehicle.
11. A double arrow shall not be displayed on the arrow board on the Advance Warning Vehicle.
12. For divided highways with three or four lanes in each direction, use TCP(3-2).
13. Standard diamond shape versions of the CW20-5 series signs may be used as an option if the rectangular signs shown are not available.
14. The Advance Warning Vehicle may straddle the edgeline when Shoulder width makes it necessary.
15. On two-lane two-way roadways, the work and protection vehicles should pull over periodically to allow motor vehicle traffic to pass. If motorists are not allowed to pass the work convoy, a DO NOT PASS (R4-1) sign should be placed on the back of the rearmost protection vehicle.

Texas Department of Transportation

Traffic Operations Division Standard

TRAFFIC CONTROL PLAN MOBILE OPERATIONS RAISED PAVEMENT MARKER INSTALLATION/ REMOVAL

TCP(3-3)-14

FILE: tcp3-3.dgn	DN: TxDOT	CK: TxDOT	DW: TxDOT	CK: TxDOT
©TxDOT September 1987	CONT	SECT	JOB	HIGHWAY
REVISIONS	0337	01	053	SH 29
2-94 4-98	DIST	COUNTY		SHEET NO.
8-95 7-13	AUS	WILLIAMSON		66
1-97 7-14				

177

DISCLAIMER:
The use of this standard is governed by the "Texas Engineering Practice Act". No warranty of any kind is made by TxDOT for any purpose whatsoever. TxDOT assumes no responsibility for the conversion of this standard to other formats or for incorporation of this standard in other computer programs.

DATE: 12/18/2025 1:51:15 PM
FILE: pw://kh-pw.bentley.com:kh-pw-01/Documents/01 Active Projects/TX-GEO-0692B4@05 arcgyd 29 WP then in Projects\Traffic Design\Project Set 72\STANDARDS_Feb 3 Plots.dgn

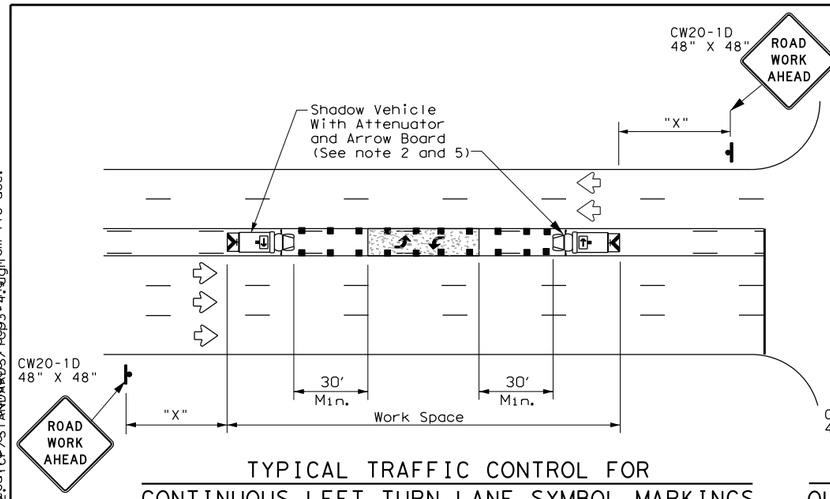

TYPICAL TRAFFIC CONTROL FOR
CONTINUOUS LEFT TURN LANE SYMBOL MARKINGS

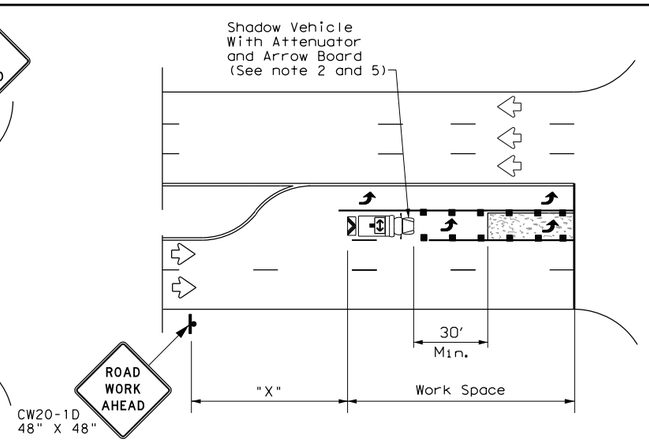

TYPICAL TRAFFIC CONTROL FOR
OUTSIDE DUAL LEFT TURN LANE SYMBOL MARKINGS

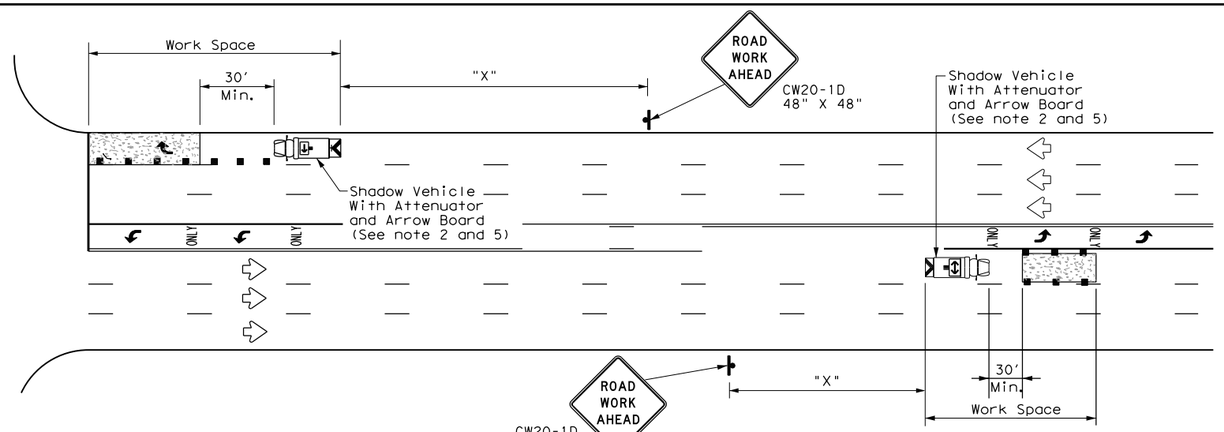

TYPICAL TRAFFIC CONTROL FOR
OUTSIDE LANE MARKINGS

TYPICAL TRAFFIC CONTROL FOR
INSIDE LANE MARKINGS

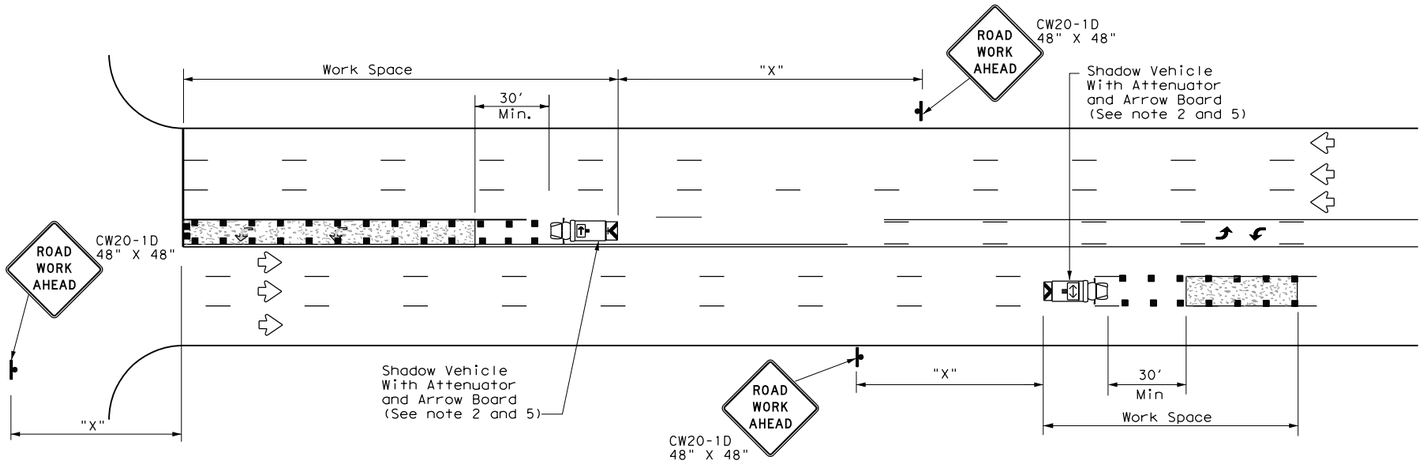

TYPICAL TRAFFIC CONTROL FOR
LEFT TURN LANE MARKINGS

TYPICAL TRAFFIC CONTROL FOR
CENTER LANE MARKINGS

LEGEND			
✳	Trail Vehicle	ARROW BOARD DISPLAY	
✳✳	Shadow Vehicle		
✳✳✳	Work Vehicle		RIGHT Directional
	Heavy Work Vehicle		LEFT Directional
	Truck Mounted Attenuator (TMA)		Double Arrow
	Traffic Flow	■ ■ ■	Channelizing Devices

Posted Speed ✳	Formula	Minimum Desirable Taper Lengths ✳✳ 10′ Offset	11′ Offset	12′ Offset	Suggested Maximum Spacing of Channelizing Devices: On a Taper	On a Tangent	Minimum Sign Spacing "X" Distance	Suggested Longitudinal Buffer Space "B"
30	$L=\frac{WS^2}{60}$	150′	165′	180′	30′	60′	120′	90′
35		205′	225′	245′	35′	70′	160′	120′
40		265′	295′	320′	40′	80′	240′	155′
45	L=WS	450′	495′	540′	45′	90′	320′	195′
50		500′	550′	600′	50′	100′	400′	240′
55		550′	605′	660′	55′	110′	500′	295′
60		600′	660′	720′	60′	120′	600′	350′
65		650′	715′	780′	65′	130′	700′	410′
70		700′	770′	840′	70′	140′	800′	475′
75		750′	825′	900′	75′	150′	900′	540′

✳ Conventional Roads Only

✳✳ Taper lengths have been rounded off.
L=Length of Taper(FT) W=Width of Offset(FT) S=Posted Speed(MPH)

TYPICAL USAGE				
MOBILE	SHORT DURATION	SHORT TERM STATIONARY	INTERMEDIATE TERM STATIONARY	LONG TERM STATIONARY
✓				

GENERAL NOTES

1. This traffic control plan is for use on conventional roads posted at 45 mph or less and is intended for mobile operations that move continuously or intermittently (stopping up to approximately 15 minutes) such as short-line striping and in-lane rumble strips. When activities are anticipated to take longer amounts of time or traffic conditions warrant, a short duration or short-term stationary traffic control plan should be used.

2. A Truck Mounted Attenuator shall be used on Shadow Vehicle. Striping on the back panel of all truck mounted attenuators shall be 8" red and white reflective sheeting placed in an inverted "V" design. Reflective sheeting shall meet or exceed the reflectivity and color requirements of departmental material specification DMS-8300, Type A.

3. All traffic control devices shall be in accordance with the "Texas Manual on Uniform Traffic Control Devices" (TMUTCD), latest edition.

4. The use of yellow rotating beacons or strobe lights on vehicles are required. Blue high intensity rotating, flashing, oscillating or strobe lights when mounted on the drivers side of the vehicle may be operated simultaneously with the amber beacons or strobe lights.

5. Flashing arrow board shall be used on Shadow Vehicle. Flashing arrow board shall be Type B or Type C as per BC Standards. The arrow board operation shall be controlled from inside the truck.

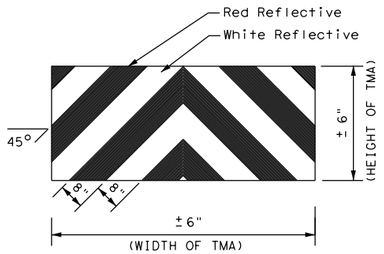

STRIPING FOR TMA

Texas Department of Transportation

Traffic Operations Division Standard

TRAFFIC CONTROL PLAN MOBILE OPERATIONS FOR ISOLATED WORK AREAS UNDIVIDED HIGHWAYS

TCP(3-4)-13

FILE: tcp3-4.dgn	DN: TxDOT	CK: TxDOT	DW: TxDOT	CK: TxDOT
©TxDOT July, 2013	CONT	SECT	JOB	HIGHWAY
REVISIONS	0337	01	053	SH 29
	DIST	COUNTY		SHEET NO.
	AUS	WILLIAMSON		67

DISCLAIMER:
The use of this standard is governed by the "Texas Engineering Practice Act". No warranty of any kind is made by TxDOT for any purpose whatsoever. TxDOT assumes no responsibility for the conversion of this standard to other formats or for incorrect results or damages resulting from its use.

DATE: 12/18/2025 1:51:33 PM
FILE: pw://kh-pw.bentley.com:kh-pw-01/Documents/01 Active Projects/TX-GEO-069284@05/d

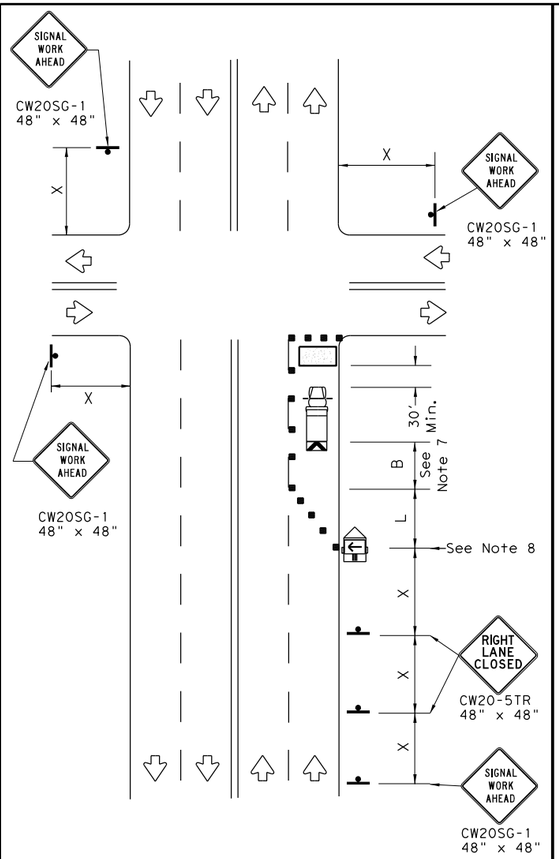

NEAR SIDE LANE CLOSURE

SHORT DURATION OR SHORT TERM STATIONARY

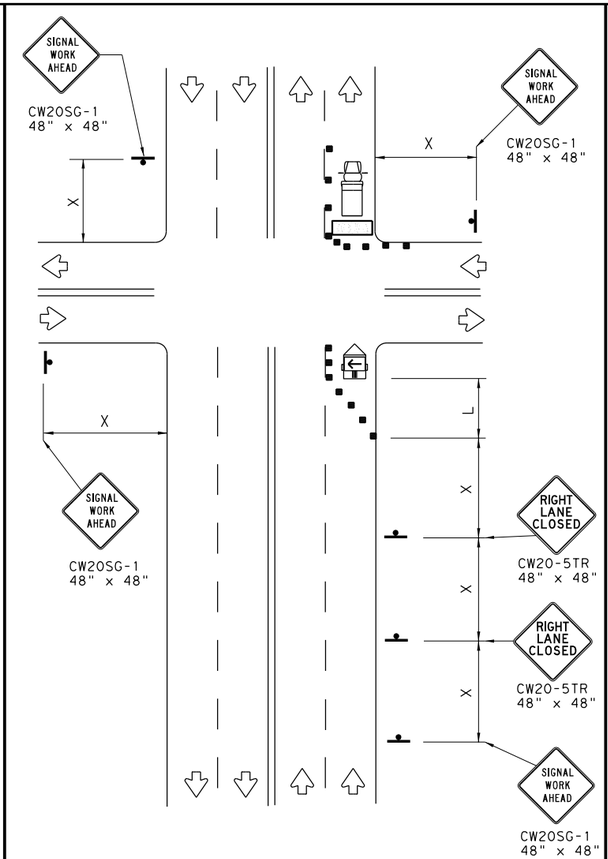

FAR SIDE RIGHT LANE CLOSURE

SHORT DURATION OR SHORT TERM STATIONARY

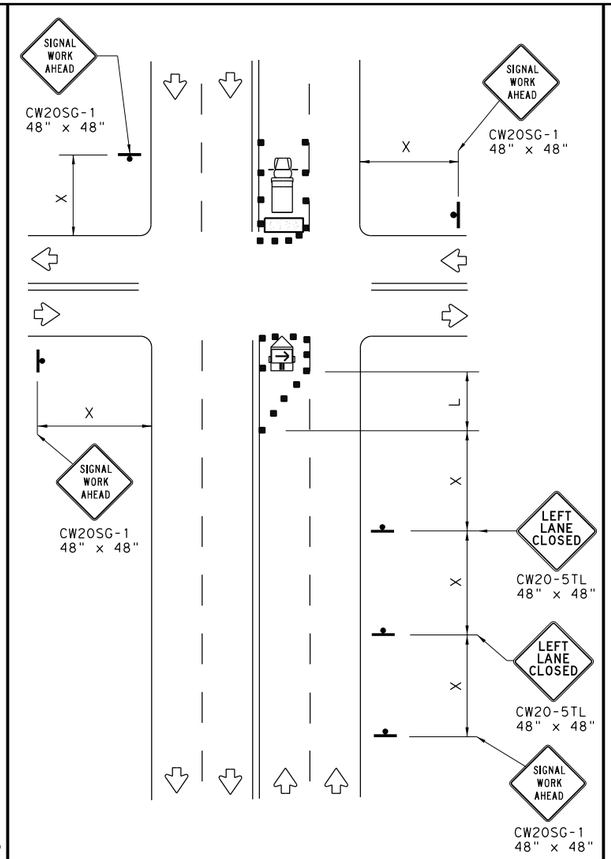

FAR SIDE LEFT LANE CLOSURE

SHORT DURATION OR SHORT TERM STATIONARY

LEGEND			
	Type 3 Barricade		Channelizing Devices
	Heavy Work Vehicle		Truck Mounted Attenuator (TMA)
	Trailer Mounted Flashing Arrow Board	M	Portable Changeable Message Sign (PCMS)
	Sign		Traffic Flow
	Flag		Flagger

Posted Speed *	Formula	Minimum Desirable Taper Lengths ** 10' Offset	11' Offset	12' Offset	Suggested Maximum Spacing of Channelizing Devices On a Taper	On a Tangent	Minimum Sign Spacing "X" Distance	Suggested Longitudinal Buffer Space "B"
30	$L = \frac{WS^2}{60}$	150'	165'	180'	30'	60'	120'	90'
35		205'	225'	245'	35'	70'	160'	120'
40		265'	295'	320'	40'	80'	240'	155'
45	L = WS	450'	495'	540'	45'	90'	320'	195'
50		500'	550'	600'	50'	100'	400'	240'
55		550'	605'	660'	55'	110'	500'	295'
60		600'	660'	720'	60'	120'	600'	350'
65		650'	715'	780'	65'	130'	700'	410'
70		700'	770'	840'	70'	140'	800'	475'
75		750'	825'	900'	75'	150'	900'	540'

* Conventional Roads Only

** Taper lengths have been rounded off.
L=Length of Taper(FT) W=Width of Offset(FT) S=Posted Speed(MPH)

WORKERS IN BUCKET TRUCKS SHALL NOT WORK ABOVE OPEN LANES OF TRAFFIC.

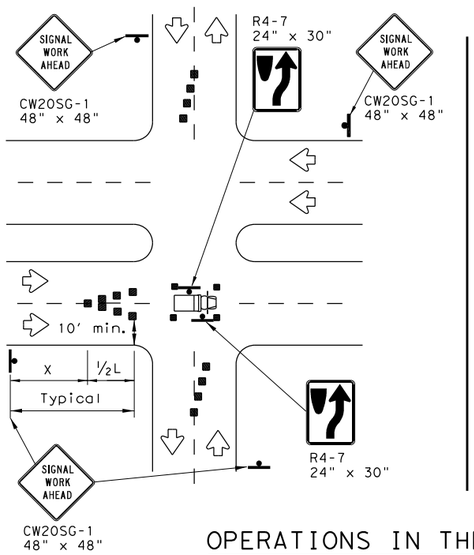

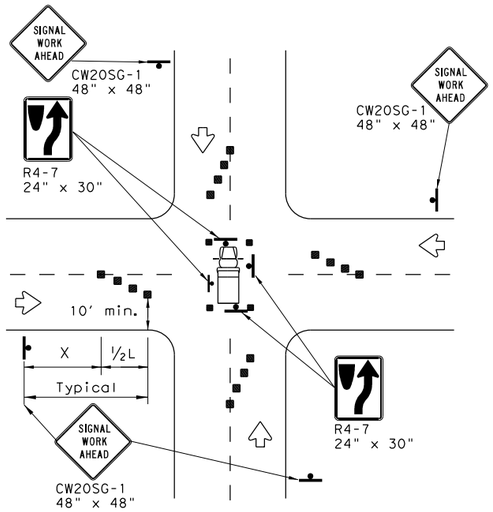

OPERATIONS IN THE INTERSECTION

SHORT DURATION

GENERAL NOTES

1. The minimum size channelizing device is the 28" cone. 42" Two-piece cones, drums, vertical panels or barricades will be required when the device must be left unattended at night.
2. Obstructions or hazards at the work area shall be clearly marked and delineated at all times.
3. Flaggers and Flagger Symbol (CW20-7) signs may be required according to field conditions.
4. Vehicles parked in roadway shall be equipped with at least two high intensity rotating, flashing, oscillating or strobe type lights.
5. High level warning devices (flag trees) may be used at corners of the vehicle.
6. When work operations are performed on existing signals, the signals may be placed in flashing red mode when approved by the engineer. If existing signals do not have power, All-Way Stop (R1-1 and R1-3P) signs may be implemented when approved by the engineer.
7. For Short-Term Stationary work the buffer space "B" from the above table should be used if field conditions permit. For Short Duration (less than 1 hour) any buffer space provided will enhance the safety of the setup.
8. The arrow board at this location may be omitted for Short Duration work if the work vehicle has an arrow board in operation. As an option, the arrow board may be placed at the end of the taper in the closed lane if space is not available at the beginning of the taper.
9. Signs and devices for the NEAR SIDE LANE CLOSURE may be altered for a left lane closure by using a LEFT LANE CLOSED (CW20-5TL) and adding channelizing devices on the centerline to protect the work space from opposing traffic.

Texas Department of Transportation

Traffic Operations Division Standard

TRAFFIC SIGNAL WORK TYPICAL DETAILS

WZ(BTS-1)-13

FILE: wzbts-13.dgn	DN: TxDOT	CK: TxDOT	DW: TxDOT	CK: TxDOT
©TxDOT April 1992	CONT	SECT	JOB	HIGHWAY
REVISIONS	0337	01	053	SH 29
2-98 10-99 7-13	DIST	COUNTY		SHEET NO.
4-98 3-03	AUS	WILLIAMSON		68

DISCLAIMER:
The use of this standard is governed by the "Texas Engineering Practice Act". No warranty of any kind is made by TxDOT for any purpose whatsoever. TxDOT assumes no responsibility for the conversion of this standard to other formats or for incorporation of this standard in other documents which are not the property of TxDOT.

DATE: 12/18/2025 1:51:34 PM
FILE: pw://kh-pw.bentley.com:kh-pw-01/Documents/01 Active Projects/TX-GEO-069284605 and 29 WZ Benefits/Traffic Design/Project Set 2/Suite/ASTANDARDS/wzbts13.dgn

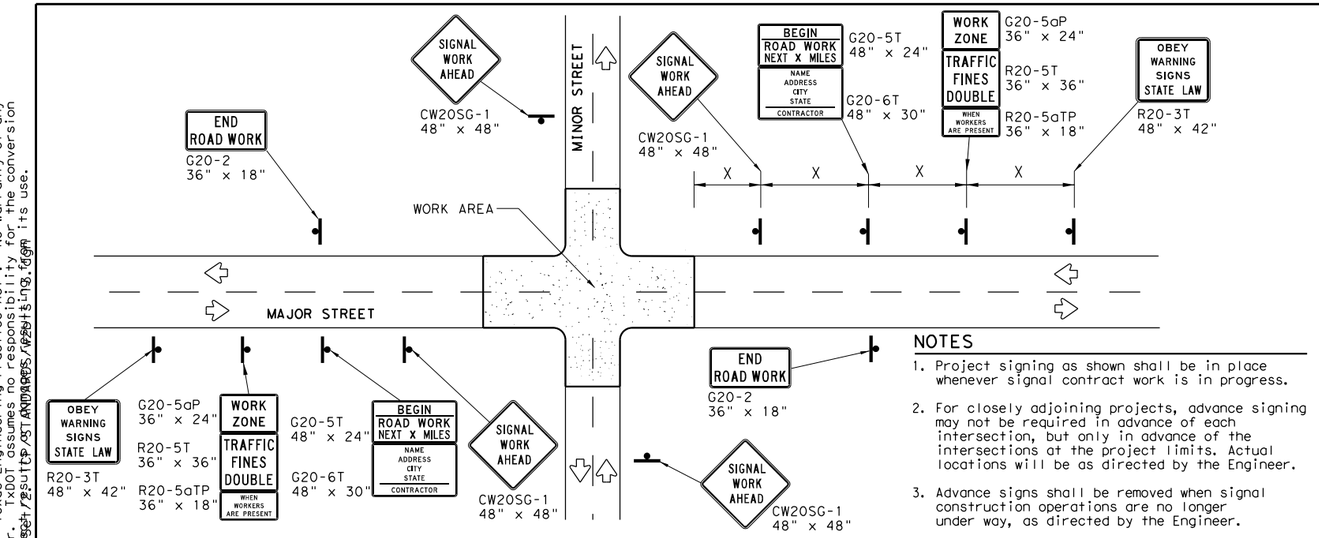

TYPICAL ADVANCE SIGNAL PROJECT SIGNING

FOR LONG TERM and INTERMEDIATE-TERM STATIONARY WORK OPERATIONS

NOTES

1. Project signing as shown shall be in place whenever signal contract work is in progress.
2. For closely adjoining projects, advance signing may not be required in advance of each intersection, but only in advance of the intersections at the project limits. Actual locations will be as directed by the Engineer.
3. Advance signs shall be removed when signal construction operations are no longer under way, as directed by the Engineer.
4. Warning sign spacing shown is typical for both directions.
5. See the Table on sheet 1 of 2 for Typical warning sign spacing.

GENERAL NOTES FOR WORK ZONE SIGNS

1. Signs shall be installed and maintained in a straight and plumb condition.
2. Wooden sign posts shall be painted white.
3. Barricades shall NOT be used as sign supports.
4. Nails shall NOT be used to attach signs to any support.
5. All signs shall be installed in accordance with the plans or as directed by the Engineer.
6. The Contractor shall furnish the sign design shown in the plans or in the "Standard Highway Sign Designs for Texas" (SHSD).
7. The Contractor shall furnish sign supports and substrates listed in the "Compliant Work Zone Traffic Control Device List" (CWZTCD), installed as per the manufacturer's recommendations.
8. Temporary signs that have damaged or cracked substrates and/or damaged or marred reflective sheeting shall be replaced as directed by the Engineer.
9. Identification markings may be shown only on the back of the sign substrate. The maximum height of letters and/or company logos used for identification shall be 1".
10. Damaged wood posts shall be replaced. Splicing wood posts will not be allowed.

DURATION OF WORK

1. Work zone durations are defined in Part 6, Section 6G.02 of the Texas Manual on Uniform Traffic Control Devices (TMUTCD).

SIGN MOUNTING HEIGHT

1. Sign height of Long-term/Intermediate-term warning signs shall be as shown on Figure 6F-1 of the TMUTCD.
2. Sign height of Short-term/Short Duration warning signs shall be as shown on Figure 6F-2 of the TMUTCD.
3. Regulatory signs shall be mounted at least 7 feet, but not more than 9 feet, above the paved surface regardless of work duration.

REMOVING OR COVERING

1. When sign messages may be confusing or do not apply, the signs shall be removed or completely covered, unless otherwise approved by the Engineer.
2. When signs are covered, the material used shall be opaque, such as heavy mil black plastic, or other materials which will cover the entire sign face and maintain their opaque properties under automobile headlights at night without damaging the sign sheeting. Burlap, or heavy materials such as plywood or aluminum shall not be used to cover signs.
3. Duct tape or other adhesive material shall NOT be affixed to a sign face.
4. Signs and anchor stubs shall be removed and holes back filled upon completion of the work.

REFLECTIVE SHEETING

1. All signs shall be retroreflective and constructed of sheeting meeting the requirements of the DMS and color usage table shown on this sheet.

SIGN SUPPORT WEIGHTS

1. Weights used to keep signs from turning over should be sandbags filled with dry, cohesionless material.
2. The sandbags will be tied shut to keep the sand from spilling and to maintain a constant weight.
3. Rock, concrete, iron, steel or other solid objects will not be permitted for use as sign support weights.
4. Sandbags should weigh a minimum of 35 lbs and a maximum of 50 lbs.
5. Sandbags shall be made of a durable material that tears upon vehicular impact. Rubber, such as tire inner tubes, shall not be used.
6. Rubber ballasts designed for channelizing devices should not be used for ballast on portable sign supports. Sign supports designed and manufactured with rubber bases may be used when shown on the CWZTCD list.
7. Sandbags shall only be placed along or laid over the base supports of the traffic control device and shall not be suspended above ground level or hung with rope, wire, chains or other fastners. Sandbags shall be placed along the length of the skids to weigh down the sign support.
8. Sandbags shall NOT be placed under the skid and shall not be used to level sign supports placed on slopes.

LEGEND	
	Sign
	Channelizing Devices
	Type 3 Barricade

DEPARTMENTAL MATERIAL SPECIFICATIONS	
SIGN FACE MATERIALS	DMS-8300
FLEXIBLE ROLL-UP REFLECTIVE SIGNS	DMS-8310

COLOR	USAGE	SHEETING MATERIAL
ORANGE	BACKGROUND	TYPE B_{FL} OR TYPE C_{FL} SHEETING
WHITE	BACKGROUND	TYPE A SHEETING
BLACK	LEGEND & BORDERS	ACRYLIC NON-REFLECTIVE SHEETING

Only pre-qualified products shall be used. A copy of the "Compliant Work Zone Traffic Control Devices List" (CWZTCD) describes pre-qualified products and their sources and may be found at the following web address:
http://www.txdot.gov/txdot_library/publications/construction.htm

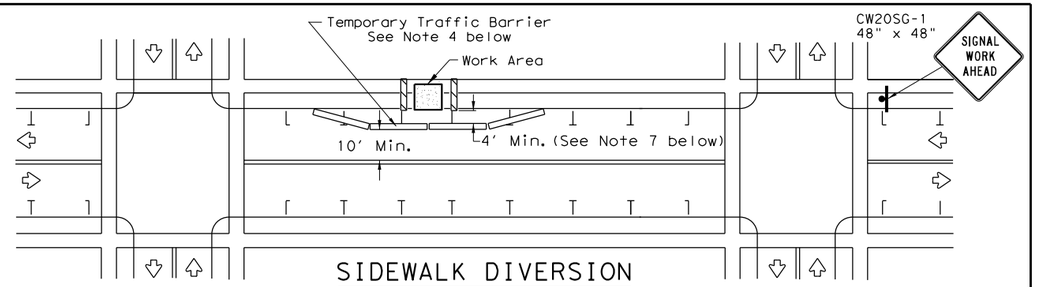

SIDEWALK DIVERSION

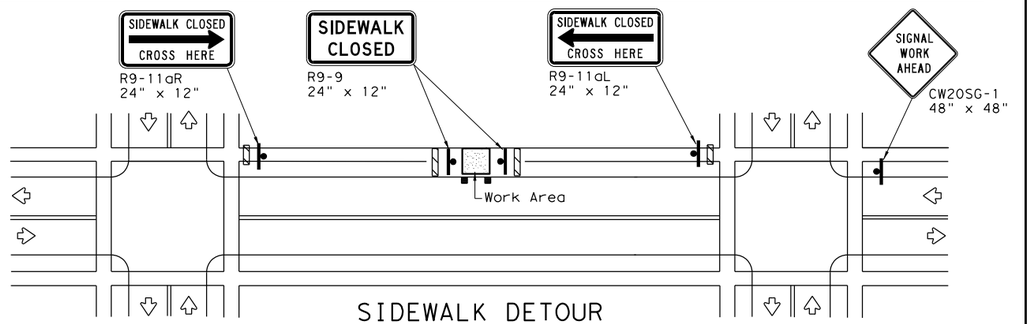

SIDEWALK DETOUR

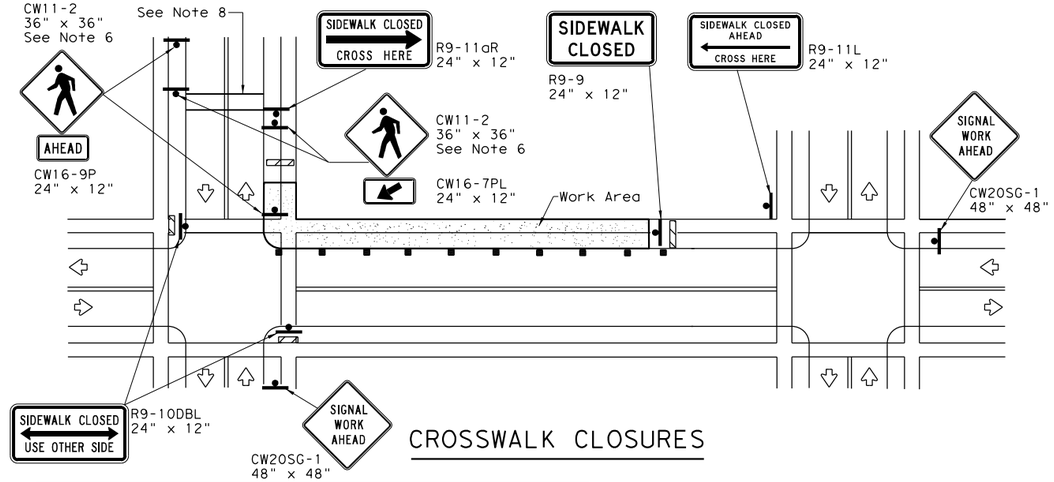

CROSSWALK CLOSURES

PEDESTRIAN CONTROL

1. Holes, trenches or other hazards shall be adequately protected by covering, delineating or surrounding the hazard with orange plastic pedestrian fencing or longitudinal channelizing devices, or as directed by the Engineer.
2. "CROSSWALK CLOSURES" as detailed above will require the Engineer's approval prior to installation.
3. R9 series signs shown may be placed on supports detailed on the BC standards or CWZTCD list, or when fabricated from approved lightweight plastic substrates, they may be mounted on top of a plastic drum at or near the location shown.
4. For speeds less than 45 mph longitudinal channelizing devices may be used instead of traffic barriers when approved by the Engineer. Attenuation of blunt ends and installation of water filled devices shall be as per BC(9) and manufacturer's recommendations.
5. Location of devices are for general guidance. Actual device spacing and location must be field adjusted to meet actual conditions.
6. Where pedestrians with visual disabilities normally use the closed sidewalk Detectable Pedestrian Barricades should be used instead of the Type 3 Barricades shown.
7. The width of existing sidewalk should be maintained if practical.
8. Pavement markings for mid-block crosswalks shall be paid for under the appropriate bid items.
9. When crosswalks or other pedestrian facilities are closed or relocated, temporary facilities shall be detectable and shall include accessibility features consistent with the features present in the existing pedestrian facility.

Texas Department of Transportation

Traffic Operations Division Standard

TRAFFIC SIGNAL WORK BARRICADES AND SIGNS

WZ(BTS-2)-13

FILE: wzbts-13.dgn	DN: TxDOT	CK: TxDOT	DW: TxDOT	CK: TxDOT
©TxDOT April 1992	CONT	SECT	JOB	HIGHWAY
REVISIONS	0337	01	053	SH 29
2-98 10-99 7-13	DIST	COUNTY		SHEET NO.
4-98 3-03	AUS	WILLIAMSON		69

DISCLAIMER:
The use of this standard is governed by the "Texas Engineering Practice Act". No warranty of any kind is made by TxDOT for any purpose whatsoever. TxDOT assumes no responsibility for the conversion of this standard to other formats or for incorrect results or damages resulting from its use.

DATE: 12/18/2025 1:51:52 PM
FILE: pw://kh-pw.bentley.com:kh-pw-01/Documents/01 Active Projects/TX-GEO-069284005 - SH 29 Widening/4 - Design/Plan Set/1 - CPSTM/ASA/wzstpm-23.dgn

WORK ZONE SHORT TERM PAVEMENT MARKINGS DETAILS

SOLID LINES

DOUBLE NO-PASSING LINE

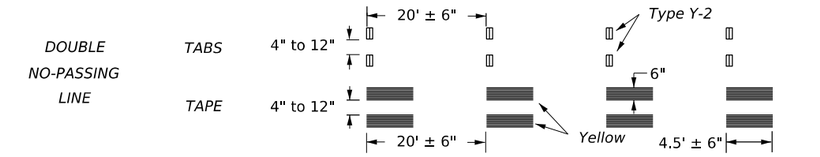

SINGLE NO-PASSING LINE or CHANNELIZATION LINE

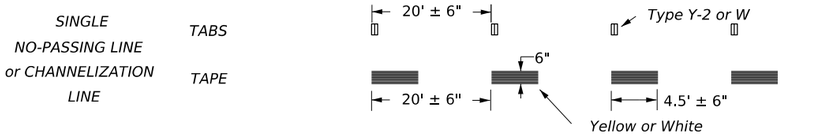

BROKEN LINES

(FOR CENTER LINE OR LANE LINE)

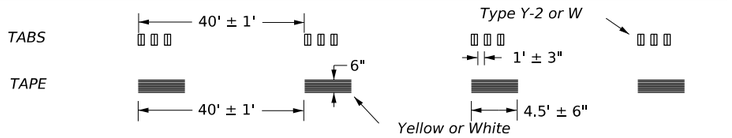

WIDE DOTTED LINES

(FOR LANE DROP LINES)

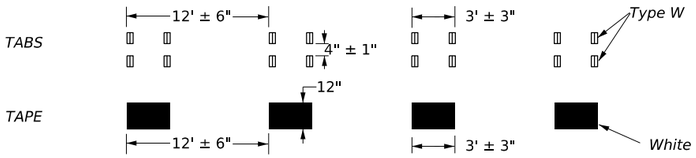

WIDE GORE MARKINGS

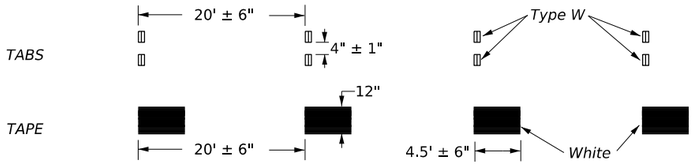

NOTES:

1. Short term pavement markings may be prefabricated markings (stick down tape) or temporary flexible reflective roadway marker tabs unless otherwise specified elsewhere in plans.
2. Short term pavement markings shall NOT be used to simulate edge lines.
3. Dimensions indicated on this sheet are typical and approximate. Variations in size and height may occur between markers or devices made by manufacturers, by as much as 1/4 inch, unless otherwise noted.
4. Temporary flexible-reflective roadway marker tabs will require normal maintenance replacement when used on roadways with an ADT per lane of up to 7500 vehicles with no more than 10% truck mix. When roadways exceed these values, additional maintenance replacement of devices should be planned.
5. No segment of roadway open to traffic shall remain without permanent pavement markings for a period greater than 14 calendar days. The Contractor will be responsible for maintaining short term pavement markings until permanent pavement markings are in place. When the Contractor is responsible for placement of permanent pavement markings, no segment of roadway shall remain without permanent pavement markings for a period greater than 14 calendar days unless weather conditions prohibit placement. Permanent pavement markings shall be placed as soon as weather permits.
6. For two lane, two-way roadways, DO NOT PASS signs shall be erected to mark the beginning of sections where passing is prohibited and PASS WITH CARE signs shall be erected to mark the beginning of sections where passing is permitted. Signs shall be in accordance with the "Texas Manual on Uniform Traffic Control Devices" (TMUTCD) and may be used to indicate the limits of no-passing zones for up to 14 calendar days. Permanent pavement markings should then be placed.
7. For low volume two lane, two-way roadways of 4000 ADT or less, no-passing lines may be omitted when approved by the Engineer. DO NOT PASS and PASS WITH CARE signs shall be erected (see note 6).
8. For exit gores where a lane is being dropped place wide gore markings or retroreflective channelizing devices to guide motorist through the exit. If channelizing devices are to be used it should be noted elsewhere in the plans. One piece cones are not allowed for this purpose.

TEMPORARY FLEXIBLE, REFLECTIVE ROADWAY MARKER TABS (TABS)

1. Temporary flexible-reflective roadway marker tabs detailed on this sheet will be designated Type Y-2 (two amber reflective surfaces with yellow body); Type Y (one amber reflective surface with yellow body); and Type W (one white or silver reflective surface with white body). Additional details may be found on BC(11).
2. Tabs shall meet requirements of Departmental Material Specification DMS-8242.
3. When dry, tabs shall be visible for a minimum distance of 200 feet during normal daylight hours and when illuminated by automobile low-beam head light at night, unless sight distance is restricted by roadway geometrics.
4. No two consecutive tabs nor four tabs per 1000 feet of line shall be missing or fail to meet the visual performance requirements of Note 3.

WORK ZONE SHORT TERM PAVEMENT MARKINGS PATTERNS

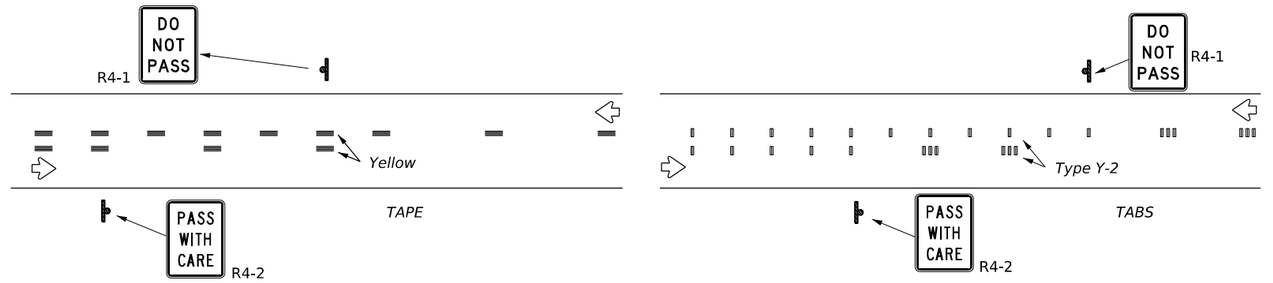

CENTER LINE & NO-PASSING ZONE BARRIER LINES FOR TWO LANE TWO-WAY HIGHWAYS

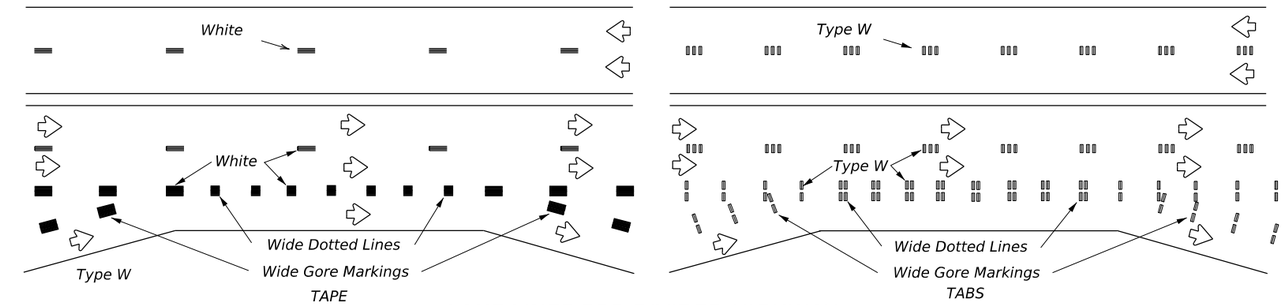

LANE LINES FOR DIVIDED HIGHWAY

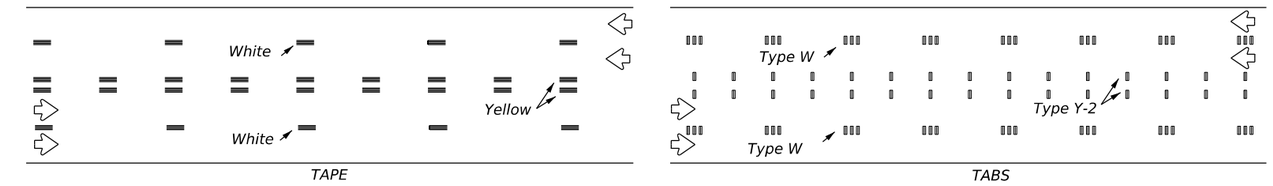

LANE & CENTER LINES FOR MULTILANE UNDIVIDED HIGHWAYS

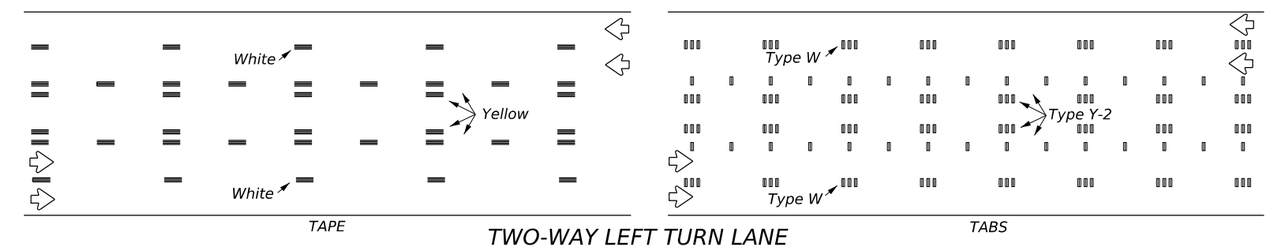

TWO-WAY LEFT TURN LANE

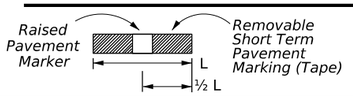

If raised pavement markers are used to supplement REMOVABLE short term markings, the markers shall be applied to the top of the tape at the approximate mid length of the tape. This allows an easier removal of raised markers and tape.

PREFABRICATED PAVEMENT MARKINGS

1. Temporary Removable Prefabricated Pavement Markings shall meet the requirements of DMS-8241.
2. Non-removable Prefabricated Pavement Markings shall meet the requirements of either DMS-8240 "Permanent Prefabricated Pavement Markings" or DMS-8243 "Temporary Costruction-Grade Prefabricated Pavement Markings."

RAISED PAVEMENT MARKERS

1. All raised pavement markers used for work zone markings shall meet the requirements of Item 672, "RAISED PAVEMENT MARKERS" and DMS-4200.

DEPARTMENTAL MATERIAL SPECIFICATIONS (DMS) & MATERIAL PRODUCER LISTS (MPL)

1. DMSs referenced above can be found along with embedded links to their respective MPLs at the following website:

http://www.txdot.gov/business/contractors_consultants/material_specifications/default.htm

Texas Department of Transportation

Traffic Safety Division Standard

WORK ZONE SHORT TERM PAVEMENT MARKINGS

WZ(STPM)-23

FILE: wzstpm-23.dgn	DN:	CK:	DW:	CK:
©TxDOT February 2023	CONT	SECT	JOB	HIGHWAY
REVISIONS	0337	01	053	SH 29
4-92 7-13 1-97 2-23 3-03	DIST	COUNTY		SHEET NO.
	AUS	WILLIAMSON		70

111

DISCLAIMER:
The use of this standard is governed by the "Texas Engineering Practice Act". No warranty of any kind is made by TxDOT for any purpose whatsoever. TxDOT assumes no responsibility for the conversion of this standard to other formats or for incorrect results from its use.

DATE: 12/18/2025 1:52:14 PM
FILE: pw://kh-pw.bentley.com:kh-pw-01/Documents/01 Active Projects/TX-GEO-0693940/05 Graphics/29 WMB&H/Traffic Design/Part 6/Suite/TCP ASTANDARDS.dgn

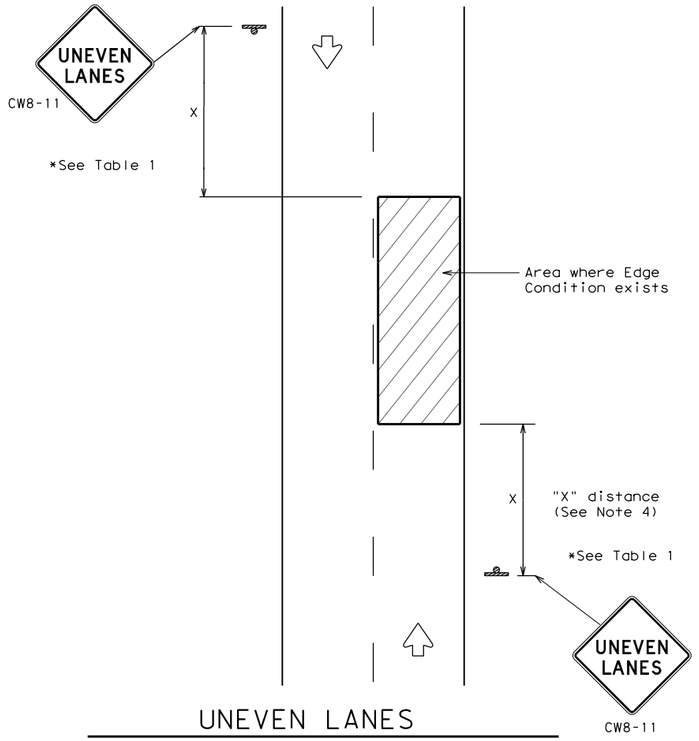

UNEVEN LANES
TWO LANE CONVENTIONAL ROAD

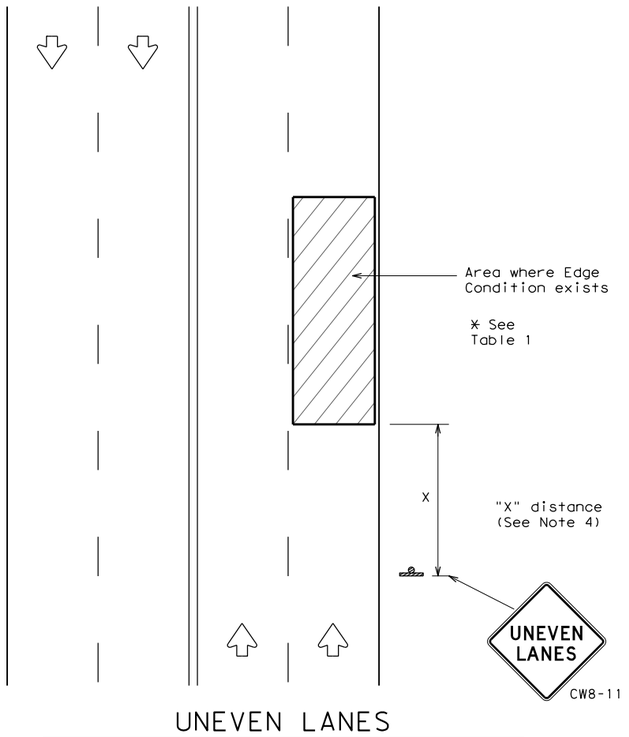

UNEVEN LANES
FOUR LANE CONVENTIONAL ROAD

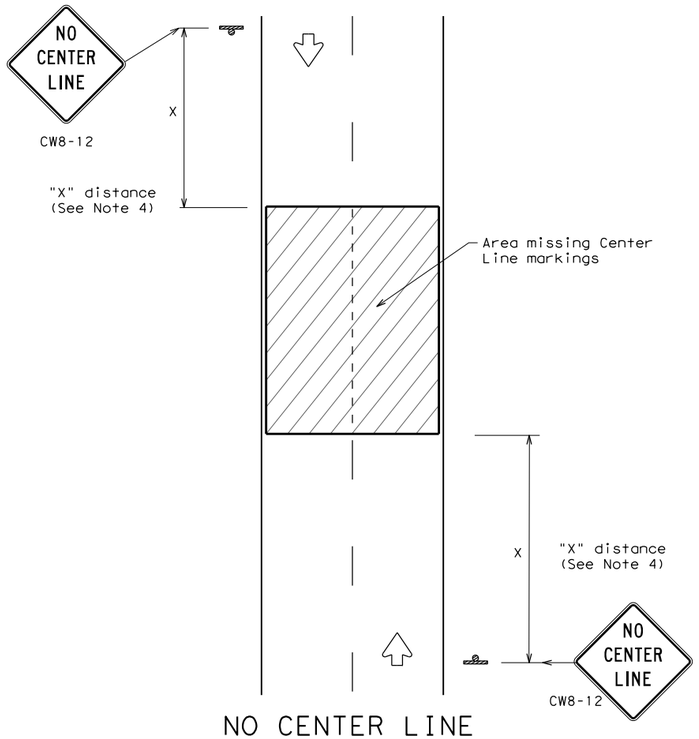

NO CENTER LINE
TWO LANE CONVENTIONAL ROAD

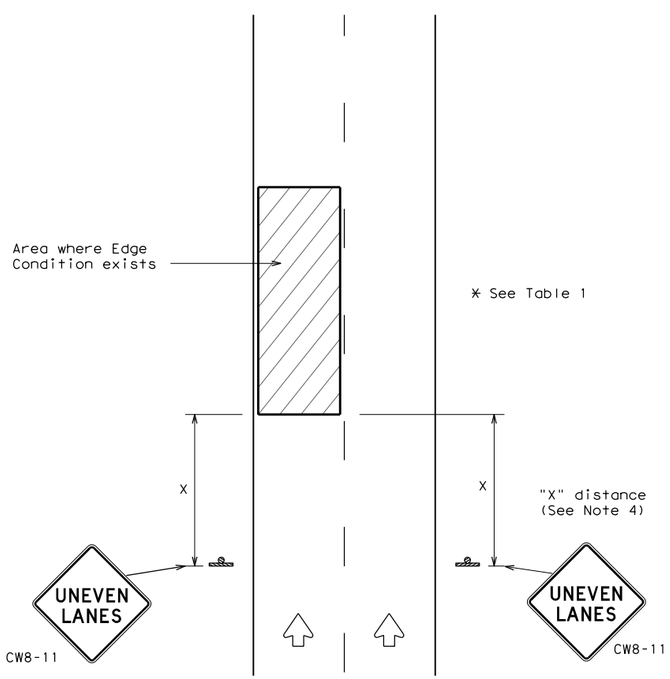

UNEVEN LANES
DIVIDED ROADWAY

DEPARTMENTAL MATERIAL SPECIFICATIONS	
PERMANENT PREFABRICATED PAVEMENT MARKINGS	DMS-8240
TEMPORARY (REMOVABLE) PREFABRICATED PAVEMENT MARKINGS	DMS-8241
SIGN FACE MATERIALS	DMS-8300

COLOR	USAGE	SHEETING MATERIAL
ORANGE	BACKGROUND	TYPE B_{FL} OR TYPE C_{FL} SHEETING
BLACK	LEGEND & BORDERS	ACRYLIC NON-REFLECTIVE SHEETING

GENERAL NOTES

1. If spalling or holes occur, ROUGH ROAD (CW8-8) signs should be placed in advance of the condition and be repeated every two miles where the condition persists.
2. UNEVEN LANES (CW8-11) signs shall be installed in advance of the condition and repeated every mile. Signs installed along the uneven lane condition may be supplemented with the NEXT XX MILES (CW7-3aP) plaque or Advisory Speed (CW13-1P) plaque.
3. NO CENTER LINE (CW8-12) signs and temporary pavement markings as per the WZ(STPM) standard shall be installed if yellow centerlines separating two way traffic are obscured or obliterated. Repeat NO CENTER LINE signs every two miles where the center line markings are not in place. The signs and markings shall remain in place until permanent pavement markings are installed.
4. Signs shall be spaced at the distances recommended as per BC standards.
5. Additional signs may be required as directed by the Engineer. Signs shall remain in place until final surface is applied. Signs shall be considered subsidiary to Item 502 "BARRICADES, SIGNS AND TRAFFIC HANDLING."
6. Signs shall be fabricated and mounted on supports as shown on the BC standards and/or listed on the "Compliant Work Zone Traffic Control Devices" list.
7. Short term markings shall not be used to simulate edge lines.
8. All signs shall be constructed in accordance with the details found in the "Standard Highway Sign Designs for Texas," latest edition.

TABLE 1

Edge Condition	Edge Height (D)	* Warning Devices
① 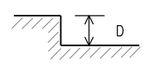	Less than or equal to: 1¼" (maximum-planing) 1½" (typical-overlay)	Sign: CW8-11
	Distance "D" may be a maximum of 1 1/4 " for planing operations and 2" for overlay operations if uneven lanes with edge condition 1 are open to traffic after work operations cease.	
② 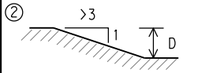	Less than or equal to 3"	Sign: CW8-11
③ 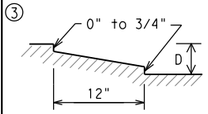 Notched Wedge Joint	Distance "D" may be a maximum of 3" if uneven lanes with edge condition 2 or 3 are open to traffic after work operations cease. Uneven lanes should not be open to traffic when "D" is greater than 3".	

TRAFFIC CONTROL DURING PLANING, OVERLAY AND LEVELING OPERATIONS ARE SHOWN ELSEWHERE IN THE PLANS.

MINIMUM WARNING SIGN SIZE	
Conventional roads	36" x 36"
Freeways/expressways, divided roadways	48" x 48"

Texas Department of Transportation

Traffic Operations Division Standard

SIGNING FOR UNEVEN LANES

WZ(UL)-13

FILE: wzul-13.dgn	DN: TxDOT	CK: TxDOT	DW: TxDOT	CK: TxDOT
©TxDOT April 1992	CONT	SECT	JOB	HIGHWAY
REVISIONS	0337	01	053	SH 29
8-95 2-98 7-13	DIST	COUNTY		SHEET NO.
1-97 3-03	AUS	WILLIAMSON		71

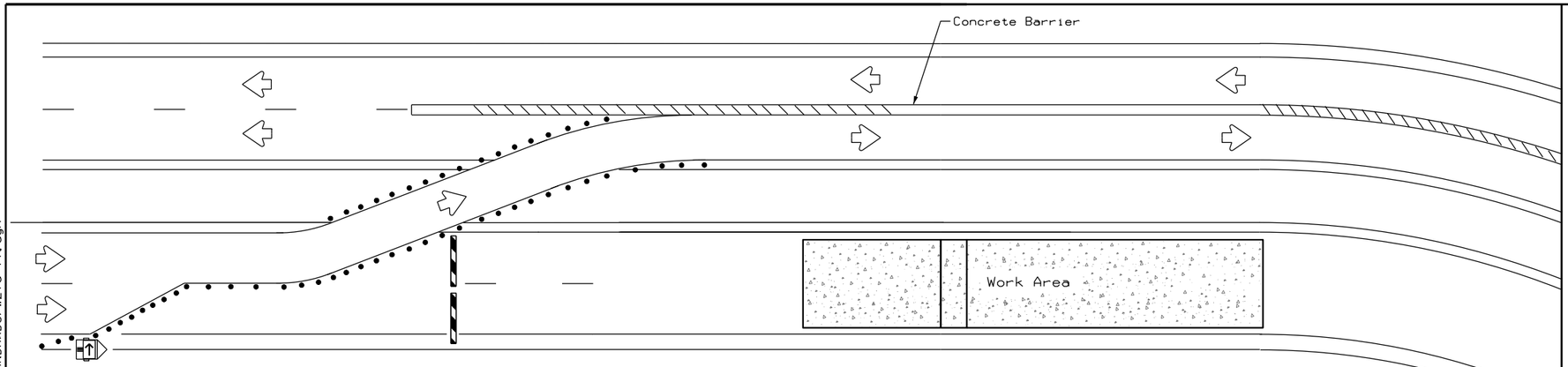

NOTES:

1. Length of Safety Glare screen will be specified elsewhere in the plans.
2. The cumulative nominal length of the modular safety glare screen units shall equal the length of the individual sections of temporary concrete traffic barrier on which they are installed so the joint between barrier sections will not be spanned by any one safety glare screen unit.
3. Screen Panel/blades will be designed such that reflective sheeting conforming with Departmental Material Specification DMS-8300, Sign Face Materials, Type B or C Yellow, minimum size of 2 inches by 12 inches can be attached to the edge of the panel/blade. The sheeting shall be attached to one glare screen panel/blade per section of concrete barrier not to exceed a spacing of 30 feet. Barrier reflectors are not necessary when panel/blades are installed with reflective sheeting as described.
4. Payment for these devices will be under statewide Special Specification "Modular Glare Screens for Headlight Barrier."
5. This detail is only intended to show types of locations where Glare Screens would be appropriate. Required signing and other devices shall be as shown elsewhere in the plans.

BARRIER DELINEATION WITH MODULAR GLARE SCREENS

LEGEND	
	Type 3 Barricade
• • •	Channelizing Devices
	Trailer Mounted Flashing Arrow Board
	Sign
\\\\	Safety glare screen

DEPARTMENTAL MATERIAL SPECIFICATIONS	
SIGN FACE MATERIALS	DMS-8300
DELINEATORS AND OBJECT MARKERS	DMS-8600
MODULAR GLARE SCREENS FOR HEADLIGHT BARRIER	DMS-8610

Only pre-qualified products shall be used. A copy of the Compliant Work Zone Traffic Control Devices List" CWZTCD) describes pre-qualified products and their sources and may be found at the following web address:

http://www.txdot.gov/business/resources/producer-list.html

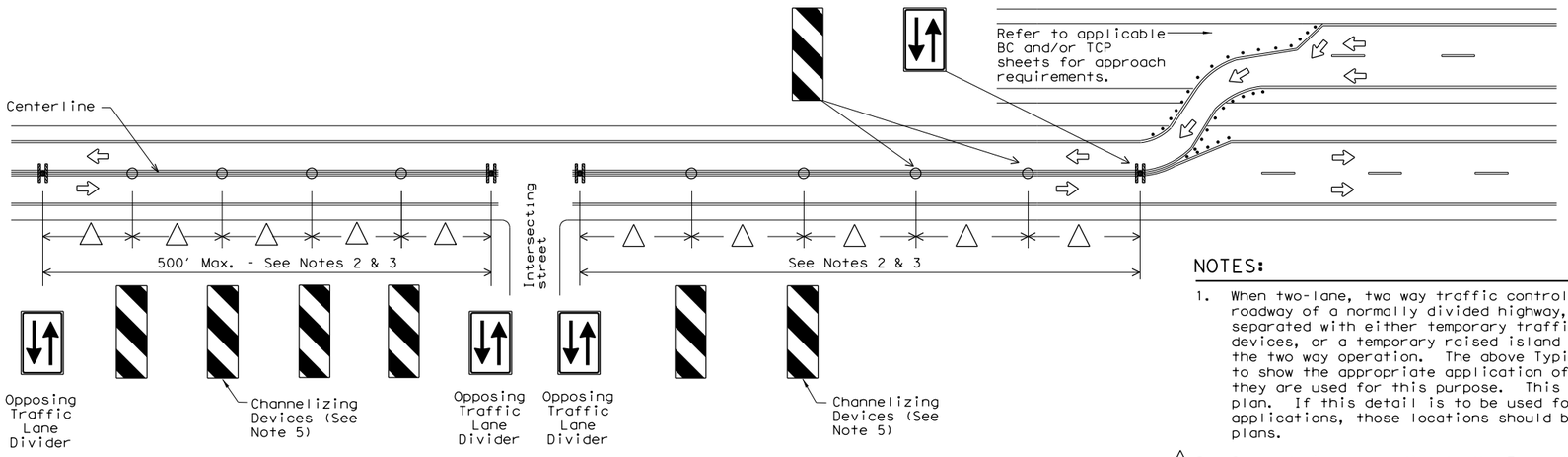

VERTICAL PANELS & OPPOSING TRAFFIC LANE DIVIDERS (OTLD) SEPARATING TWO-WAY TRAFFIC ON NORMALLY DIVIDED HIGHWAYS

NOTES:

1. When two-lane, two way traffic control must be maintained on one roadway of a normally divided highway, opposing traffic shall be separated with either temporary traffic barriers, channelizing devices, or a temporary raised island throughout the length of the two way operation. The above Typical Application is intended to show the appropriate application of channelizing devices when they are used for this purpose. This is not a traffic control plan. If this detail is to be used for other types of roads or applications, those locations should be stated elsewhere in the plans.
2. △ Space devices according to the Tangent Spacing shown on the Device Spacing table on BC(9) but not exceeding 100'.
3. Every fifth device should be an OTLD except when spaced closer to accommodate an intersection. An OTLD should be the first device on each side of intersecting streets or roads.
4. Locations where surface mount bases with adhesives or self-righting devices will be required in order to maintain them in their proper position should be noted elsewhere in the plans.
5. Channelizing devices are to be vertical panels, 42" cones or tubular markers that are at least 36" tall. Tubular markers used to separate traffic should have a rubber base weighing at least 30 pounds. Tubular markers that are 42" tall or more shall have four bands of reflective material as detailed for 42" cones on BC(10). Tubular markers less than 42" but at least 36" tall shall have three bands of 3" wide white reflective material spaced 2" apart. Reflective material shall meet DMS-8300, Type A.

Texas Department of Transportation | Traffic Operations Division Standard

TRAFFIC CONTROL PLAN TYPICAL DETAILS

WZ(TD)-17

FILE: wztd-17.dgn	DN: TxDOT	CK: TxDOT	DW: TxDOT	CK: TxDOT
© TxDOT February 1998	CONT	SECT	JOB	HIGHWAY
REVISIONS 4-98 2-17 3-03 7-13	0337	01	053	SH 29
	DIST		COUNTY	SHEET NO.
	AUS		WILLIAMSON	72

110

DISCLAIMER:
The use of this standard is governed by the "Texas Engineering Practice Act". No warranty of any kind is made by TxDOT for any purpose whatsoever. TxDOT assumes no responsibility for the conversion of this standard to other formats or for incorrect results or damages resulting from its use.

DATE: 12/18/2025 1:52:31 PM
FILE: pw://kh-pw.bentley.com:kh-pw-01/Documents/01 Active Projects/TX-GEO-06928405 Standard 29 Widening/Plans Design/Incorrect/2.0 STANDARDS/WZTD-17.dgn

DISCLAIMER:
The use of this standard is governed by the "Texas Engineering Practice Act". No warranty of any kind is made by TxDOT for any purpose whatsoever. TxDOT assumes no responsibility for the conversion of this standard to other formats or for incorrect results or damages resulting from its use.

DATE: 12/18/2025 1:52:49 PM
FILE: pw://kh-pw.bentley.com:kh-pw-01/Documents/01 Active Projects/TX-GEO-0692814/05 STANDARDS/wzrcd-13.dgn
Design/Project Set/Sheet Set: STANDARDS/wzrcd-13.dgn

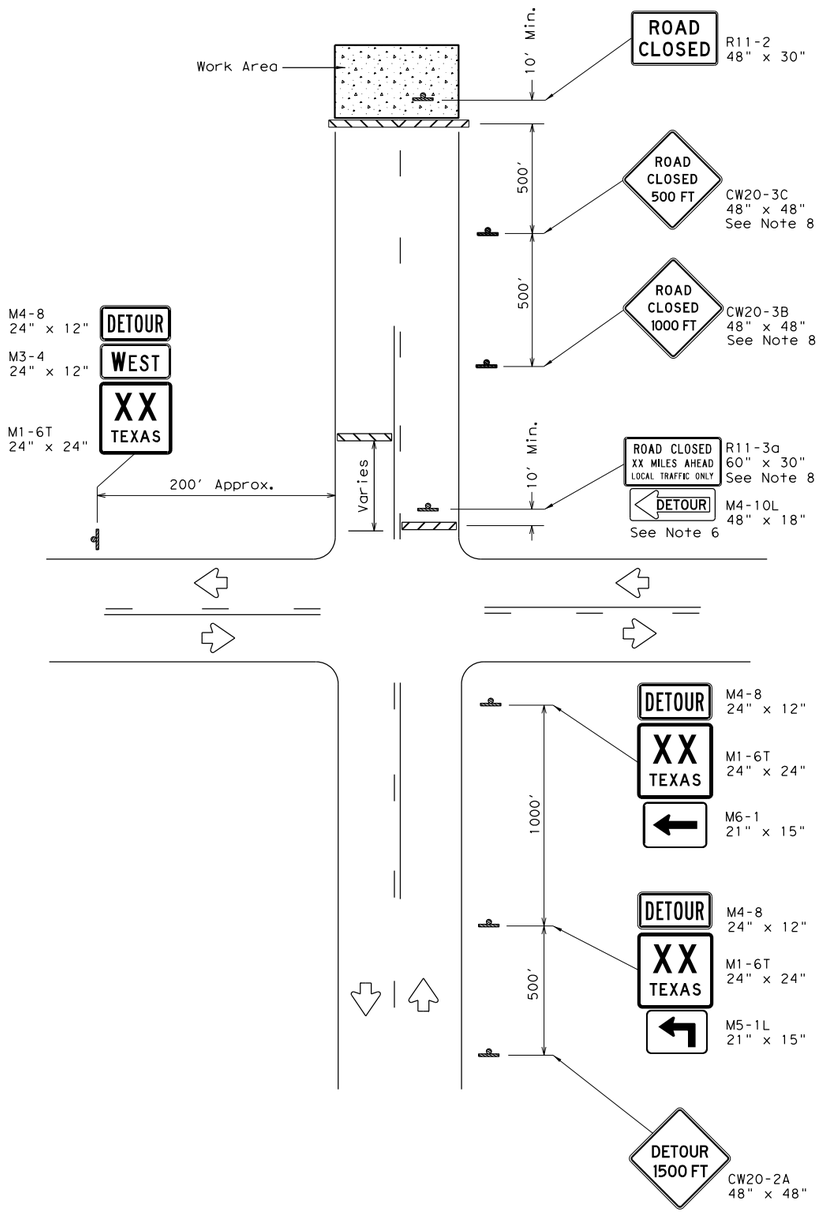

ROAD CLOSURE BEYOND THE INTERSECTION

Signing for a Numbered Route with an Off-Site Detour

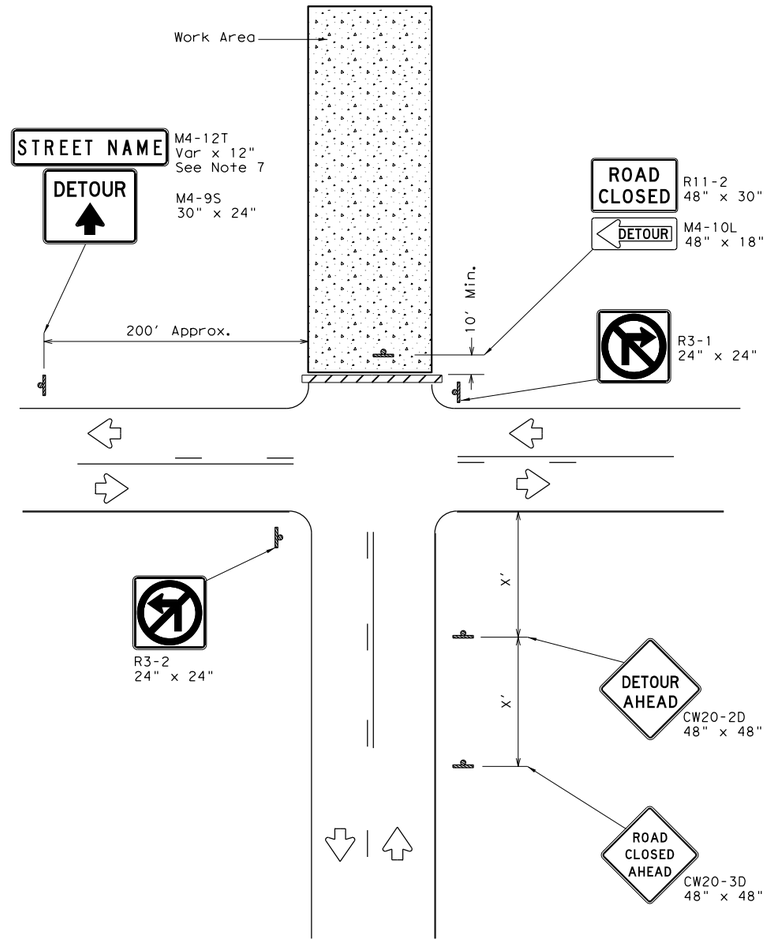

ROAD CLOSURE AT THE INTERSECTION

Signing for an Un-numbered Route with an Off-Site Detour

LEGEND	
	Type 3 Barricade
	Sign

Posted Speed *	Minimum Sign Spacing "X" Distance
30	120'
35	160'
40	240'
45	320'
50	400'
55	500'
60	600'
65	700'
70	800'
75	900'

* Conventional Roads Only

GENERAL NOTES

1. This sheet is intended to provide details for temporary work zone road closures. For permanent road closure details see the D&OM standards.
2. Barricades used shall meet the requirements shown on Barricade and Construction Standard BC(10) and listed on the Compliant Work Zone Traffic Control Devices list (CWZTCD).
3. Stockpiled materials shall not be placed on the traffic side of barricades.
4. Barricades at the road closure should extend from pavement edge to pavement edge.
5. Detour signing shown is intended to illustrate the type of signing that is appropriate for numbered routes or un-numbered routes as labeled. It does not indicate the full extent of detour signing required. Detour routes should be signed as shown elsewhere in the plans.
6. If the road is open for a significant distance beyond the intersection or there are significant origin/destination points beyond the intersection, the signs and barricades at this location should be located at the edge of the traveled way.
7. The Street Name (M4-12T) sign is to be placed above the DETOUR (M4-9S) sign.
8. For urban areas where there is a shorter distance between the intersection and the actual closure location, the ROAD CLOSED XX MILES AHEAD (R11-3a) sign may be replaced with a ROAD CLOSED TO THRU TRAFFIC (R11-4) sign. If adequate space does not exist between the intersection and the closure a single ROAD CLOSED AHEAD (CW20-3D) sign spaced as per the table above may replace the ROAD CLOSED 1000 FT (CW20-3B) and ROAD CLOSED 500 FT (CW20-3C) signs.
9. Signs and barricades shown shall be subsidiary to Item 502. Locations where these details will be required shall be as shown elsewhere in the plans.

Texas Department of Transportation

Traffic Operations Division Standard

WORK ZONE ROAD CLOSURE DETAILS

WZ(RCD)-13

FILE: wzrcd-13.dgn	DN: TxDOT	CK: TxDOT	DW: TxDOT	CK: TxDOT
©TxDOT August 1995	CONT	SECT	JOB	HIGHWAY
REVISIONS	0337	01	053	SH 29
1-97 4-98 7-13	DIST	COUNTY		SHEET NO.
2-98 3-03	AUS	WILLIAMSON		73

113

DISCLAIMER:
The use of this standard is governed by the "Texas Engineering Practice Act". No warranty of any kind is made by TxDOT for any purpose whatsoever. TxDOT assumes no responsibility for the conversion of this standard to other formats or for incorrect results or damages resulting from its use.

DATE: 12/18/2025 1:53:07 PM
FILE: pw://kh-pw.bentley.com:kh-pw-01/Documents/01 Active Projects/TX-GEO-0692840/05 Standards/wzbrk-13.dgn
User:gad29 Workflow:Projects Design/Projects Set 2/Suite/STANDARDS/wzbrk-13.dgn

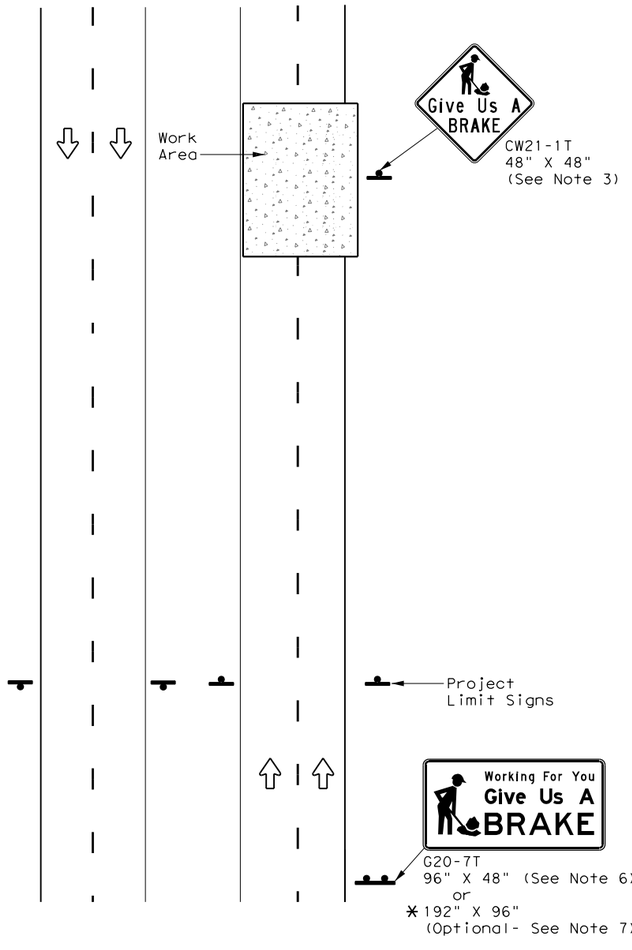

DIVIDED HIGHWAY

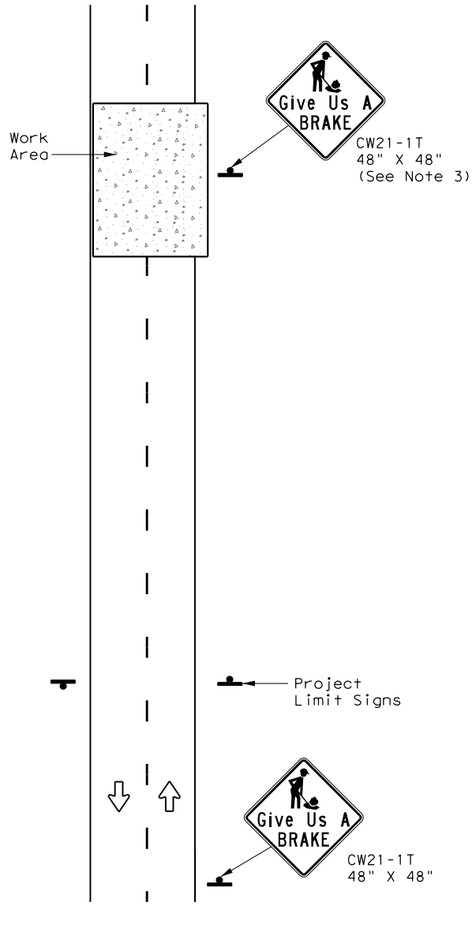

UNDIVIDED HIGHWAY

SIGNS ARE SHOWN FOR ONE DIRECTION OF TRAVEL

* When the optional larger WORKING FOR YOU GIVE US A BRAKE (G20-7T) 192" x 96" sign is required, the locations shall be noted elsewhere in the plans.

SUMMARY OF LARGE SIGNS

BACKGROUND COLOR	SIGN DESIGNATION	SIGN	SIGN DIMENSIONS	REFLECTIVE SHEETING	SQ FT	GALVANIZED STRUCTURAL STEEL			DRILLED SHAFT 24" DIA. (LF)
						Size	(LF) ①	(LF) ②	
Orange	G20-7T	Working For You Give Us A BRAKE	96" X 48"	Type B_{FL} or C_{FL}	32	▲	▲	▲	▲
Orange	G20-7T	Working For You Give Us A BRAKE	192" X 96"	Type B_{FL} or C_{FL}	128	W8x18	16	17	12

▲ See Note 6 Below

LEGEND	
	Sign
	Large Sign
	Traffic Flow

DEPARTMENTAL MATERIAL SPECIFICATIONS	
PLYWOOD SIGN BLANKS	DMS-7100
ALUMINUM SIGN BLANKS	DMS-7110
SIGN FACE MATERIALS	DMS-8300

COLOR	USAGE	SHEETING MATERIAL
ORANGE	BACKGROUND	TYPE B_{FL} OR TYPE C_{FL}
BLACK	LEGEND & BORDERS	NON-REFLECTIVE ACRYLIC FILM

GENERAL NOTES

1. See BC and SMD sheets for additional sign support details.
2. Sign locations shall be approved by the Engineer.
3. For projects more than two miles in length, Give Us a BRAKE signs should be repeated halfway through the project. The Give Us a Brake (CW21-1T) may be used for this purpose.
4. Work zone speed limits are sometimes used in conjunction with GIVE US A BRAKE signing. See BC(3) for location and spacing of construction speed zone signing when required.
5. Give Us a Brake (CW21-1T) signs and supports shall be considered subsidiary to Item 502, "Barricades, Signs and Traffic Handling."
6. The 96" X 48" Working For You Give Us A BRAKE (G20-7T) may use a 1/2" or 5/8" plywood substrate or 0.125" aluminum sheeting substrate and may be supported by two 4" x 6" wood posts with drilled holes for breakaway as per BC(5) and will be subsidiary to Item 502.
7. The Working For You Give Us A BRAKE (G20-7T) 192" X 96" sign shall be paid for under the following specification items:
   Item 636 - Aluminum Signs
   Item 647 - Large Roadside Sign Supports and Assemblies.
   Item 416 - Drilled Shaft Foundations
8. All signs shall be constructed in accordance with the details found in the "Standard Highway Sign Designs for Texas," latest edition. Sign details not shown in this manual shall be shown in the plans or the Engineer shall provide a detail to the Contractor before the sign is manufactured.

Texas Department of Transportation

Traffic Operations Division Standard

WORK ZONE "GIVE US A BRAKE" SIGNS

WZ(BRK)-13

FILE: wzbrk-13.dgn	DN: TxDOT	CK: TxDOT	DW: TxDOT	CK: TxDOT
©TxDOT August 1995	CONT	SECT	JOB	HIGHWAY
REVISIONS	0337	01	053	SH 29
6-96 5-98 7-13	DIST	COUNTY		SHEET NO.
8-96 3-03	AUS	WILLIAMSON		74

116

DISCLAIMER:
The use of this standard is governed by the "Texas Engineering Practice Act". No warranty of any kind is made by TxDOT for any purpose whatsoever. TxDOT assumes no responsibility for the conversion of this standard to other formats or for incorrect results or damages resulting from its use.

DATE: 12/18/2025 1:53:27 PM
FILE: pw://kh-pw.bentley.com:kh-pw-01/Documents/01 Active Projects/TX-GEO-069281605/Design/Part 7/Sheets/STANDARDS/wzrs22.dgn

Warning sign and rumble strip sequence in opposite direction is same as below.

TABLE 1		
Flagger to Flagger (Length of Work Area)	ADT	# of Rumble Strip Arrays
1/8 Mile	< 4,500	1
	≥ 4,500	2
1/4 Mile	< 3,500	1
	≥ 3,500	2
1/2 Mile	< 2,600	1
	≥ 2,600	2
1 Mile	< 1,600	1
	≥ 1,600	2
> 1 Mile	N/A	2

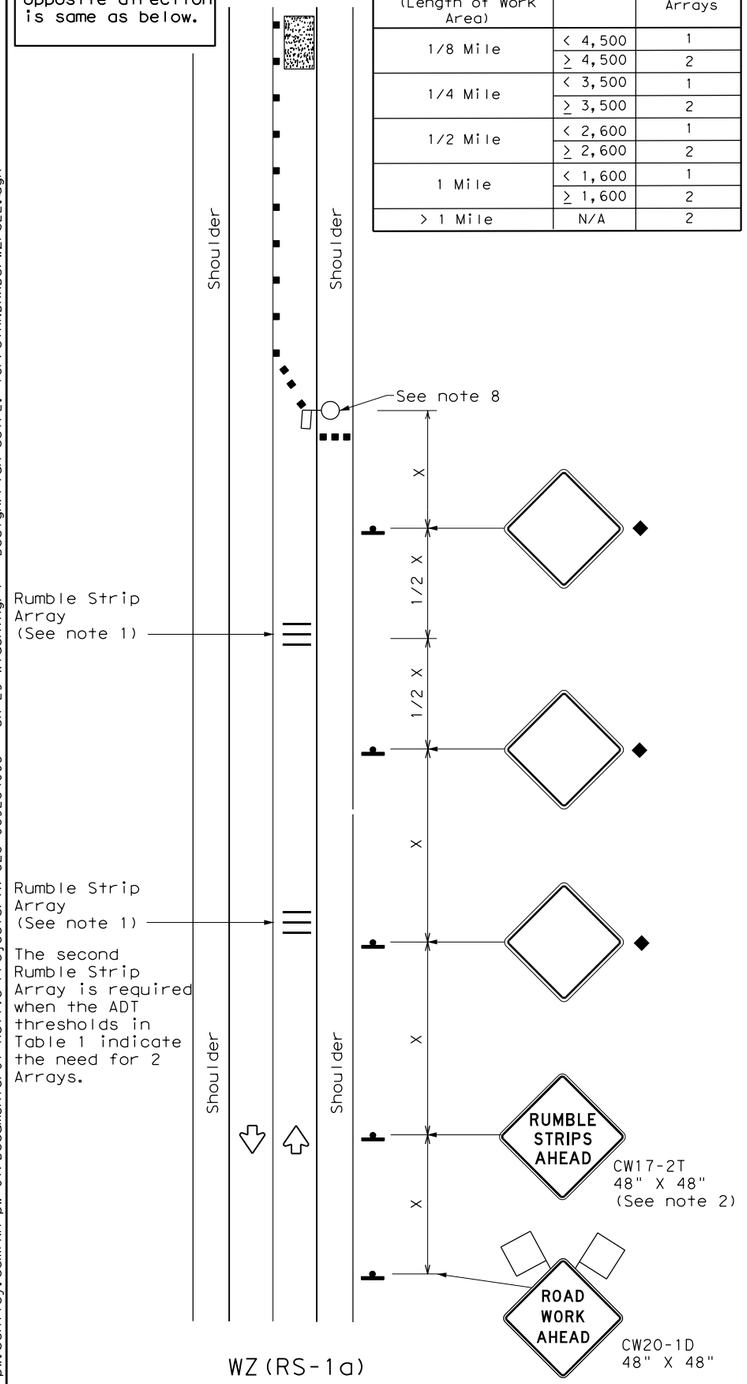

WZ(RS-1a)

RUMBLE STRIPS ON ONE-LANE TWO-WAY APPLICATION

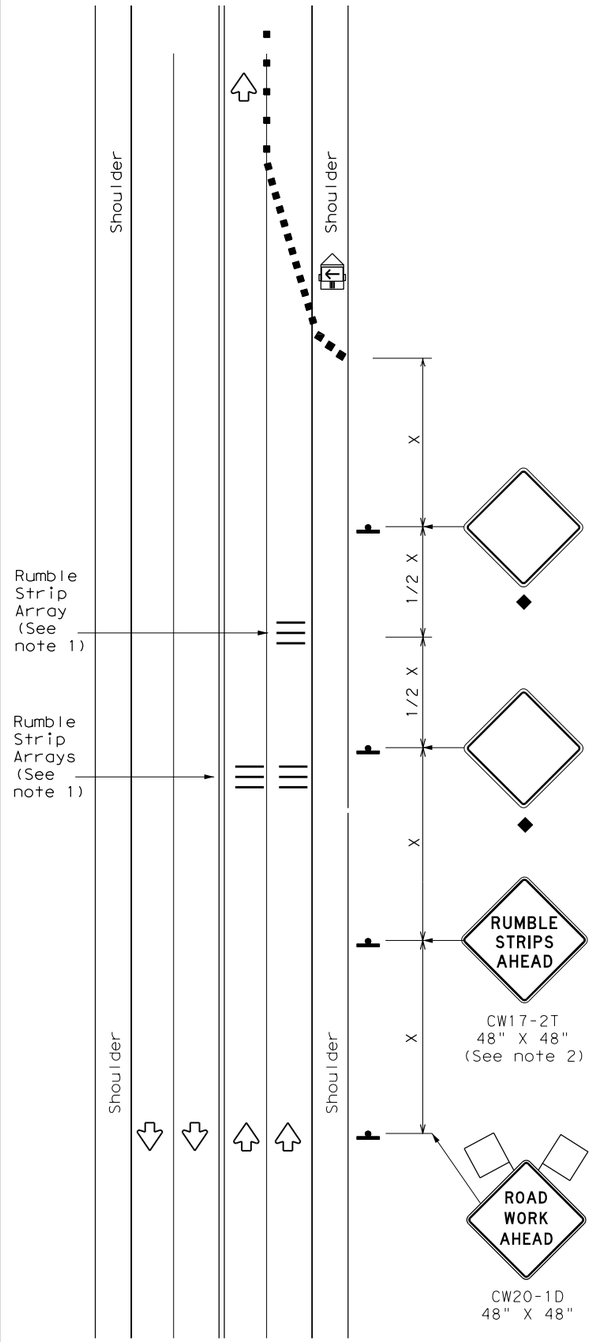

WZ(RS-1b)

RUMBLE STRIPS FOR LANE CLOSURE ON CONVENTIONAL ROADWAY

GENERAL NOTES

1. Each Rumble Strip Array should consist of three rumble strips spaced center to center at the spacing shown in Table 2, placed transverse across the lane at locations shown.
2. The CW17-2T "RUMBLE STRIPS AHEAD" sign should be located after the CW20-1D "ROAD WORK AHEAD sign and spaced as shown. If traffic is observed to be queuing, or is expected to queue beyond the Rumble Strips, the CW17-2T sign and the first Rumble Strip Array may be located upstream of the CW20-1D sign as necessary to provide needed warning.
3. Temporary Rumble Strips will be considered subsidiary to Item 502, and shall be a product listed on the Compliant Work Zone Traffic Control Devices.
4. Remove Temporary Rumble Strips before removing the advanced warning signs.
5. Temporary Rumble Strips should not be used on horizontal curves, loose gravel, soft or bleeding asphalt, heavily rutted pavements or unpaved surfaces.
6. Temporary Rumble Strips shall be installed and maintained as per manufacturer's recommendations.
7. This standard sheet shall be used in conjunction with other appropriate TCP standard, TMUTCD typical application or project specific detail for the project.
8. The one-lane two-way application may utilize a flagger, an Automated Flagger Assistance Device (AFAD) or a Portable Traffic Signal (PTS).
9. Replace defective Temporary Rumble Strips as directed by the Engineer.
10. Temporary Rumble Strips may be used on freeways or expressways based on engineering judgment and written direction from the Engineer.

LEGEND			
	Type 3 Barricade		Channelizing Devices
	Heavy Work Vehicle		Truck Mounted Attenuator (TMA)
	Trailer Mounted Flashing Arrow Panel	M	Portable Changeable Message Sign (PCMS)
	Sign		Traffic Flow
	Flag		Flagger

Posted Speed *	Formula	Minimum Desirable Taper Lengths ** 10' Offset	11' Offset	12' Offset	Suggested Maximum Spacing of Channelizing Devices On a Taper	On a Tangent	Minimum Sign Spacing "X" Distance	Suggested Longitudinal Buffer Space "B"
30	$L=\frac{WS^2}{60}$	150'	165'	180'	30'	60'	120'	90'
35		205'	225'	245'	35'	70'	160'	120'
40		265'	295'	320'	40'	80'	240'	155'
45	L=WS	450'	495'	540'	45'	90'	320'	195'
50		500'	550'	600'	50'	100'	400'	240'
55		550'	605'	660'	55'	110'	500'	295'
60		600'	660'	720'	60'	120'	600'	350'
65		650'	715'	780'	65'	130'	700'	410'
70		700'	770'	840'	70'	140'	800'	475'
75		750'	825'	900'	75'	150'	900'	540'

* Conventional Roads Only

** Taper lengths have been rounded off.
L=Length of Taper(FT) W=Width of Offset(FT)
S=Posted Speed(MPH)

TYPICAL USAGE				
MOBILE	SHORT DURATION	SHORT TERM STATIONARY	INTERMEDIATE TERM STATIONARY	LONG TERM STATIONARY
	✓	✓		

◆ Signs are for illustrative purposes only. Signs required may vary depending on the TCP, TMUTCD Typical Application, or project specific details for the project.

* For posted speeds in excess of 65 MPH, it is recommended that spacing is increased as speed limits increase. Increasing space between rumble strips will improve effectiveness.

TABLE 2	
Speed	Approximate distance between strips in an array
≤ 40 MPH	10'
> 40 MPH & ≤ 55 MPH	15'
= 60 MPH	20'
≥ 65 MPH	* 35' +

Texas Department of Transportation — Traffic Safety Division Standard

TEMPORARY RUMBLE STRIPS

WZ(RS)-22

FILE: wzrs22.dgn	DN: TxDOT	CK: TxDOT	DW: TxDOT	CK: TxDOT
©TxDOT November 2012	CONT	SECT	JOB	HIGHWAY
REVISIONS 2-14 1-22 4-16	0337	01	053	SH 29
	DIST	COUNTY		SHEET NO.
	AUS	WILLIAMSON		75

117



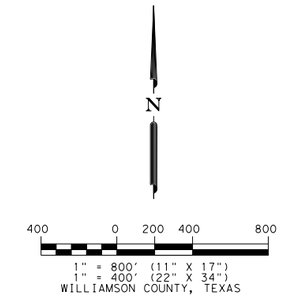

STATE OF TEXAS
REGISTERED
SCOTT C. BRASHEAR
6660
PROFESSIONAL
LAND SURVEYOR

10/26/2023

Survey Date: July, 2023

SAM
4801 Southwest Parkway
Building Two, Suite 100
Austin, Texas 78735
(512) 447-0575
Fax: (512) 326-3029
Texas Firm Registration No. 10064300

© 2023
Texas Department of Transportation

NOTES:

1) ALL COORDINATES SHOWN HEREON ARE BASED OFF THE TEXAS COORDINATE SYSTEM, CENTRAL ZONE (4203), NAD83 / NAVD88, GEOID12A. ALL COORDINATES SHOWN HEREON ARE IN SURFACE COORDINATES AND MAY BE CONVERTED TO GRID BY DIVIDING BY A SURFACE ADJUSTMENT FACTOR OF 1.00011.
UNITS: U.S.SURVEY FEET

2) EXISTING CONTROL POINTS 246-2042 AND 246-2043 WERE RECOVREED AND FOUND TO BE OUT OF TOLERANCE. COORDINATE VALUES WERE RE-ESTABLISHED UTILIZING STATIC SURVEY PROCESSED TO CORS STATIONS TXBU, TXC2 AND SAM2. RE-ESTABLISHED COORDINATE VALUES FOR CONTROL POINTS 246-2042 AND 246-2043 WERE HELD AS A BASIS TO ESTABLISH COORDINATES FOR CONTROL POINTS 246-2042 AND 246-2043.

3) A CALIBRATION SHOULD BE PERFORMED WHEN USING ANY OF THE CONTROL SHOWN HEREON.

HORIZONTAL & VERTICAL CONTROL - GRID COORDINATES

PNT	NORTHING	EASTING	ELEV.	DESCRIPTION
246-2042	10,203,630.89	3,126,986.98	797.09'	TxDOT 3-1/4" ALUMINUM DISK ON A 5/8" IRON ROD FOUND IN CONCRETE STAMPED "246-2042"
246-2043	10,209,215.74	3,130,755.70	737.94'	TxDOT 3-1/4" ALUMINUM DISK ON A 5/8" IRON ROD FOUND IN CONCRETE STAMPED "246-2043"
246-2071	10,203,460.50	3,124,649.52	818.88'	TxDOT 3-1/4" ALUMINUM DISK ON A 5/8" IRON ROD SET IN CONCRETE STAMPED "246-2071"
246-2072	10,203,791.80	3,123,527.51	836.97'	TxDOT 3-1/4" ALUMINUM DISK ON A 5/8" IRON ROD SET IN CONCRETE STAMPED "246-2072"

HORIZONTAL & VERTICAL CONTROL - SURFACE COORDINATES

PNT	NORTHING	EASTING	ELEV.	DESCRIPTION
246-2042	10,204,753.29	3,127,330.95	797.09'	TxDOT 3-1/4" ALUMINUM DISK ON A 5/8" IRON ROD FOUND IN CONCRETE STAMPED "246-2042"
246-2043	10,210,338.75	3,131,100.08	737.94'	TxDOT 3-1/4" ALUMINUM DISK ON A 5/8" IRON ROD FOUND IN CONCRETE STAMPED "246-2043"
246-2071	10,204,582.88	3,124,993.23	818.88'	TxDOT 3-1/4" ALUMINUM DISK ON A 5/8" IRON ROD SET IN CONCRETE STAMPED "246-2071"
246-2072	10,204,914.22	3,123,871.10	836.97'	TxDOT 3-1/4" ALUMINUM DISK ON A 5/8" IRON ROD SET IN CONCRETE STAMPED "246-2072"

S.H. 29
CONTROL LAYOUT

FHWA TEXAS DIVISION	FEDERAL AID PROJECT NO.	SHEET NO.
		76

STATE	DISTRICT	COUNTY	
TEXAS	AUS	WILLIAMSON	
CONTROL	SECTION	JOB	HIGHWAY NO.
0337	01	053	S.H. 29

FILE:\\saminc\AUS\PROJECTS\101905224SF\100\Survey\02Base\Control\52245F_SH 29 Control_TX_C_1.00011_ORD_01.dgn

246-2042

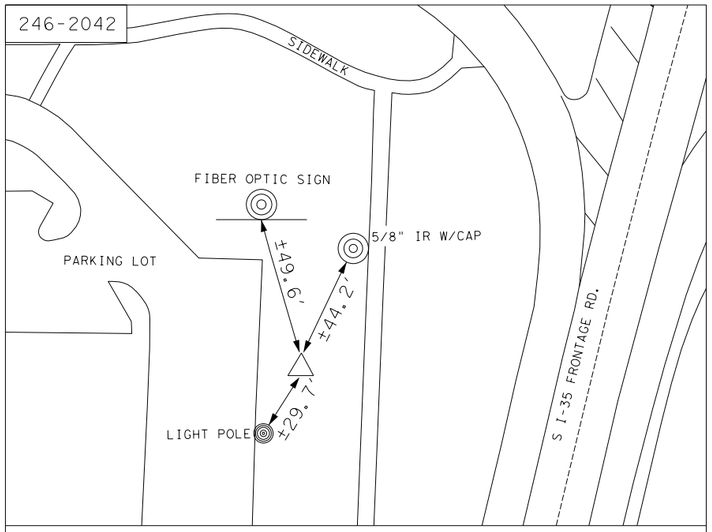

POINT 246-2042 IS A 3-1/4" ALUMINUM DISK ON A 5/8" IRON ROD IN CONCRETE STAMPED "246-2042" FOUND IN THE NORTHWEST RIGHT-OF-WAY OF THE SOUTH I-35 FRONTAGE ROAD, ±49.6 FEET SOUTHEAST OF A FIBER OPTIC SIGN, ±44.2 FEET SOUTHWEST OF A 5/8" IRON ROD W/CAP AND ±29.7 FEET NORTHEAST OF A LIGHT POLE.

SURFACE COORDINATES	GRID COORDINATES
N=10,204,753.29	N=10,203,630.89
E=3,127,330.95	E=3,126,986.98
ELEV.=797.09'	ELEV.=797.09'

TxDOT 3-1/4" ALUMINUM DISK ON A 5/8" IRON ROD IN CONCRETE STAMPED "246-2042" FOUND

246-2043

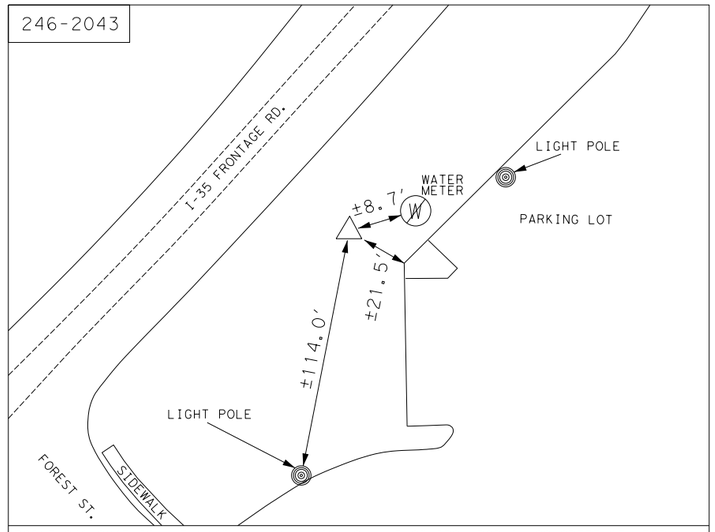

POINT 246-2043 IS A 3-1/4" ALUMINUM DISK ON A 5/8" IRON ROD IN CONCRETE STAMPED "246-2043" FOUND IN THE SOUTHEAST RIGHT-OF-WAY OF THE NORTH I-35 FRONTAGE ROAD, ±114.0 FEET NORTHEAST OF A LIGHT POLE, ±21.5 FEET NORTHWEST OF THE BACK OF CURB, AND ±8.7 FEET SOUTHWEST OF A WATER METER.

SURFACE COORDINATES	GRID COORDINATES
N=10,210,338.75	N=10,209,215.74
E=3,131,100.08	E=3,130,755.70
ELEV.=737.94'	ELEV.=737.94'

TxDOT 3-1/4" ALUMINUM DISK ON A 5/8" IRON ROD IN CONCRETE STAMPED "246-2043" FOUND

246-2071

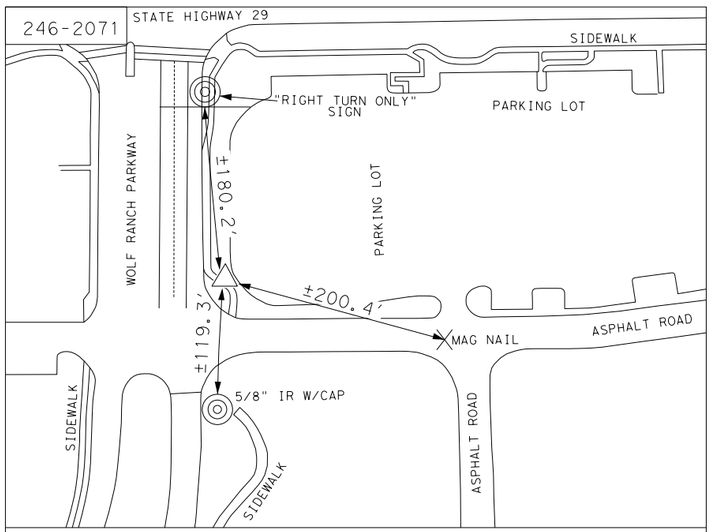

POINT 246-2071 IS A 3-1/4" ALUMINUM DISK ON A 5/8" IRON ROD IN CONCRETE STAMPED "246-2071" SET IN THE EAST RIGHT-OF-WAY OF WOLF RANCH PARKWAY, ±180.2 FEET SOUTHEAST OF A "RIGHT TURN ONLY" SIGN, ±200.4 FEET NORTHWEST OF A MAG NAIL AND ±119.3 FEET NORTH OF AN IRON ROD.

SURFACE COORDINATES	GRID COORDINATES
N=10,204,582.88	N=10,203,460.50
E=3,124,993.23	E=3,124,649.52
ELEV.=818.88'	ELEV.=818.88'

TxDOT 3-1/4" ALUMINUM DISK ON A 5/8" IRON ROD SET IN CONCRETE STAMPED "246-2071"

246-2072

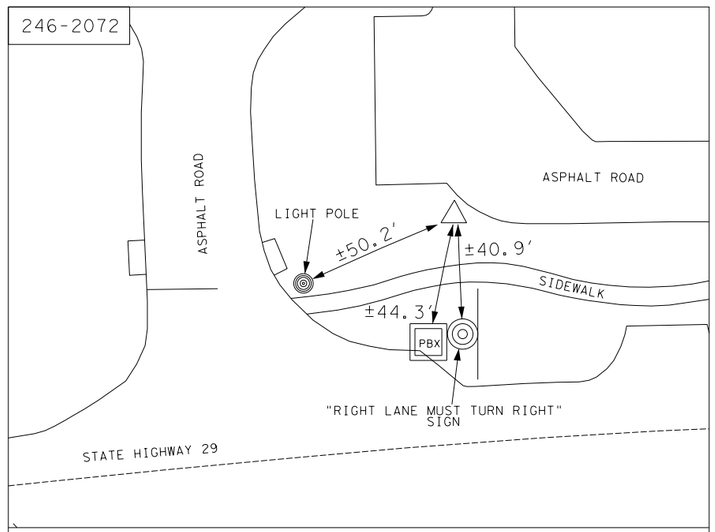

POINT 246-2072 IS A 3-1/4" ALUMINUM DISK ON A 5/8" IRON ROD IN CONCRETE STAMPED "246-2072" SET IN THE NORTH RIGHT-OF-WAY OF STATE HIGHWAY 29, ±50.2 FEET NORTHEAST OF A LIGHT POLE, ±44.3 FEET NORTHEAST OF A PULL BOX AND ±40.9 FEET NORTHWEST OF A "RIGHT LANE MUST TURN RIGHT" SIGN.

SURFACE COORDINATES	GRID COORDINATES
N=10,204,914.22	N=10,203,791.80
E=3,123,871.10	E=3,123,527.51
ELEV.=836.97'	ELEV.=836.97'

TxDOT 3-1/4" ALUMINUM DISK ON A 5/8" IRON ROD SET IN CONCRETE STAMPED "246-2072"

NOTES:

1) ALL COORDINATES SHOWN HEREON ARE BASED OFF THE TEXAS COORDINATE SYSTEM, CENTRAL ZONE (4203), NAD83 / NAVD88, GEOID12A. ALL COORDINATES SHOWN HEREON ARE IN SURFACE COORDINATES AND MAY BE CONVERTED TO GRID BY DIVIDING BY A SURFACE ADJUSTMENT FACTOR OF 1.00011.
UNITS: U.S. SURVEY FEET

2) EXISTING CONTROL POINTS 246-2042 AND 246-2043 WERE RECOVREED AND FOUND TO BE OUT OF TOLERANCE. COORDINATE VALUES WERE RE-ESTABLISHED UTILIZING STATIC SURVEY PROCESSED TO CORS STATIONS TXBU, TXC2 AND SAM2. RE-ESTABLISHED COORDINATE VALUES FOR CONTROL POINTS 246-2042 AND 246-2043 WERE HELD AS A BASIS TO ESTABLISH COORDINATES FOR CONTROL POINTS 246-2042 AND 246-2043.

3) A CALIBRATION SHOULD BE PERFORMED WHEN USING ANY OF THE CONTROL SHOWN HEREON.

N

NOT TO SCALE

STATE OF TEXAS
REGISTERED
SCOTT C. BRASHEAR
6660
PROFESSIONAL
LAND SURVEYOR

Scott C. Brashear 10/26/2023

Survey Date: July, 2023

SAM
4801 Southwest Parkway
Building Two, Suite 100
Austin, Texas 78735
(512) 447-0575
Fax: (512) 326-3029
Texas Firm Registration No. 10064300

© 2023
Texas Department of Transportation

S.H. 29
HORIZONTAL & VERTICAL CONTROL SHEET

FHWA TEXAS DIVISION	FEDERAL AID PROJECT NO.	SHEET NO.
		77

STATE	DISTRICT	COUNTY	
TEXAS	AUS	WILLIAMSON	
CONTROL	SECTION	JOB	HIGHWAY NO.
0337	01	053	S.H. 29

FILE:\\sgmlnc\AUS\PROJECTS\1019052245F\100\Survey\02Base\Control\52245F_SH 29 Control_TX_C_1_00011_ORD_01.dgn

* ALIGNMENT NAME: CL_SH29

* ALIGNMENT DESCRIPTION:
* ALIGNMENT STYLE: ALIGNMENT\BASELINE
*

	STATION	NORTHING	EASTING
ELEMENT: LINEAR			
POT( )	142+71.09 R1	10204775.22	3123197.72
PC( )	147+71.09 R1	10204795.70	3123697.30
TANGENTIAL DIRECTION:	N87°39'07.02"E		
TANGENTIAL LENGTH:	500.00		
ELEMENT: CIRCULAR			
PC( )	147+71.09 R1	10204795.70	3123697.30
PI( )	148+18.58 R1	10204797.65	3123744.75
CC( )	10205794.86	3123656.33	
PRC( )	148+65.99 R1	10204804.08	3123791.79
RADIUS:	1000.00		
DELTA:	05°26'14.53" LEFT		
DEGREE OF CURVATURE(ARC):	05°43'46.48"		
LENGTH:	94.90		
TANGENT:	47.49		
CHORD:	94.86		
MIDDLE ORDINATE:	1.13		
EXTERNAL:	1.13		
TANGENT DIRECTION:	N87°39'07.01"E		
RADIAL DIRECTION:	S02°20'52.99"E		
CHORD DIRECTION:	N84°55'59.75"E		
RADIAL DIRECTION:	S07°47'07.52"E		
TANGENT DIRECTION:	N82°12'52.48"E		
ELEMENT: CIRCULAR			
PRC( )	148+65.99 R1	10204804.08	3123791.79
PI( )	149+13.48 R1	10204810.51	3123838.84
CC( )	10203813.30	3123927.26	
PT( )	149+60.89 R1	10204812.46	3123886.29
RADIUS:	1000.00		
DELTA:	05°26'14.53" RIGHT		
DEGREE OF CURVATURE(ARC):	05°43'46.48"		
LENGTH:	94.90		
TANGENT:	47.49		
CHORD:	94.86		
MIDDLE ORDINATE:	1.13		
EXTERNAL:	1.13		
TANGENT DIRECTION:	N82°12'52.48"E		
RADIAL DIRECTION:	S07°47'07.52"E		
CHORD DIRECTION:	N84°55'59.75"E		
RADIAL DIRECTION:	S02°20'52.99"E		
TANGENT DIRECTION:	N87°39'07.01"E		
ELEMENT: LINEAR			
PT( )	149+60.89 R1	10204812.46	3123886.29
POT( )	203+00.09 R1	10205031.20	3129221.00
TANGENTIAL DIRECTION:	N87°39'07.02"E		
TANGENTIAL LENGTH:	5339.20		

* ALIGNMENT NAME: CL_WRP

* ALIGNMENT DESCRIPTION:
* ALIGNMENT STYLE: ALIGNMENT\BASELINE
*

	STATION	NORTHING	EASTING
ELEMENT: LINEAR			
POT( )	100+00.00 R1	10204639.40	3124925.15
POT( )	104+63.18 R1	10205102.19	3124906.22
TANGENTIAL DIRECTION:	N02°20'34.50"W		
TANGENTIAL LENGTH:	463.18		

* ALIGNMENT NAME: CL_WLD

* ALIGNMENT DESCRIPTION:
* ALIGNMENT STYLE: ALIGNMENT\BASELINE
*

	STATION	NORTHING	EASTING
ELEMENT: LINEAR			
POT( )	7+00.00 R1	10204612.87	3126336.32
PI( )	10+00.00 R1	10204912.87	3126335.15
TANGENTIAL DIRECTION:	N00°13'26.56"W		
TANGENTIAL LENGTH:	300.00		
ELEMENT: LINEAR			
PI( )	10+00.00 R1	10204912.87	3126335.15
POT( )	14+64.43 R1	10205376.95	3126317.10
TANGENTIAL DIRECTION:	N02°13'39.47"W		
TANGENTIAL LENGTH:	464.43		

* ALIGNMENT NAME: DRW_01

* ALIGNMENT DESCRIPTION:
* ALIGNMENT STYLE: ALIGNMENT\DRIVEWAY
*

	STATION	NORTHING	EASTING
ELEMENT: LINEAR			
POT( )	10+00.00 R1	10204873.61	3125377.61
POT( )	11+36.68 R1	10205010.17	3125372.01
TANGENTIAL DIRECTION:	N02°20'52.98"W		
TANGENTIAL LENGTH:	136.68		

* ALIGNMENT NAME: DRW_02

* ALIGNMENT DESCRIPTION:
* ALIGNMENT STYLE: ALIGNMENT\DRIVEWAY
*

	STATION	NORTHING	EASTING
ELEMENT: LINEAR			
POT( )	10+00.00 R1	10204891.04	3125802.72
POT( )	11+36.68 R1	10205027.61	3125797.12
TANGENTIAL DIRECTION:	N02°20'52.98"W		
TANGENTIAL LENGTH:	136.68		

* ALIGNMENT NAME: DRW_03

* ALIGNMENT DESCRIPTION:
* ALIGNMENT STYLE: ALIGNMENT\DRIVEWAY
*

	STATION	NORTHING	EASTING
ELEMENT: LINEAR			
POT( )	10+00.00 R1	10204903.68	3126110.96
POT( )	11+36.68 R1	10205040.25	3126105.36
TANGENTIAL DIRECTION:	N02°20'52.98"W		
TANGENTIAL LENGTH:	136.68		

12/18/2025

STATE OF TEXAS
TYLER G. MITCHELL
139240
LICENSED
PROFESSIONAL ENGINEER

GEORGETOWN
TEXAS
more than welcome

Kimley»Horn F-928

Texas Department of Transportation

SH 29

HORIZONTAL
ALIGNMENT DATA

SHEET 1 OF 1

CONT	SECT	JOB	HIGHWAY
0337	01	053	SH 29
DIST	COUNTY		SHEET NO.
AUS	WILLIAMSON		78

DATE: 12/18/2025 1:53:46 PM
FILE: pw://Documents.bentley.com:kh-pw-01/Documents/01 Active Projects/TX-GEO-069284005 - SH 29 Widening/4 - Design/Plan Set/3. Roadway/SH29_K_ROW_HAD01.dgn

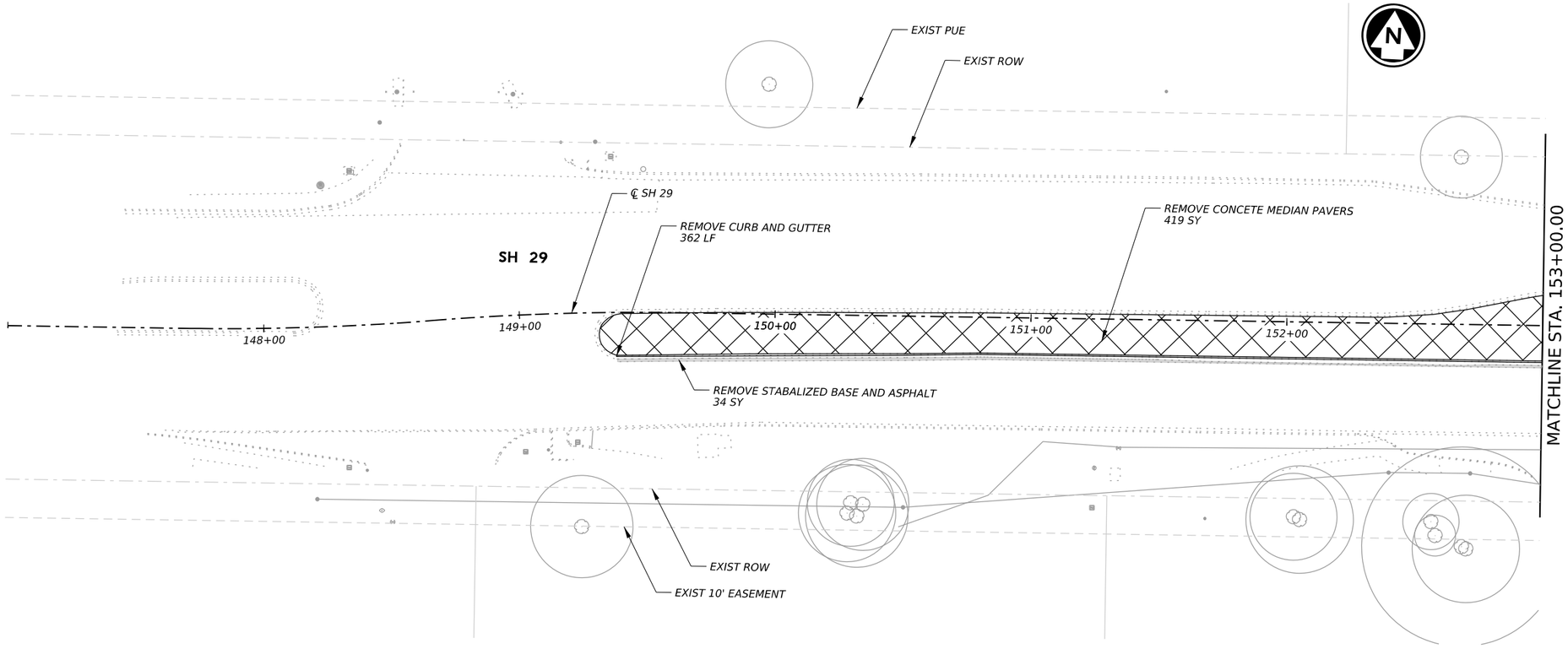

LEGEND

- REMOVE ASPHALT & STABILIZED BASE
- REMOVE MEDIAN PAVERS
- REMOVE CONCRETE SIDEWALK, CONCRETE DRIVEWAY
- REMOVE CURB,CURB & GUTTER
- SAW CUT

HORIZ. 0' 25' 50'

NOTES:

1. SEE ROADWAY PLAN AND PROFILE SHEETS FOR MILL & OVERLAY LIMITS.

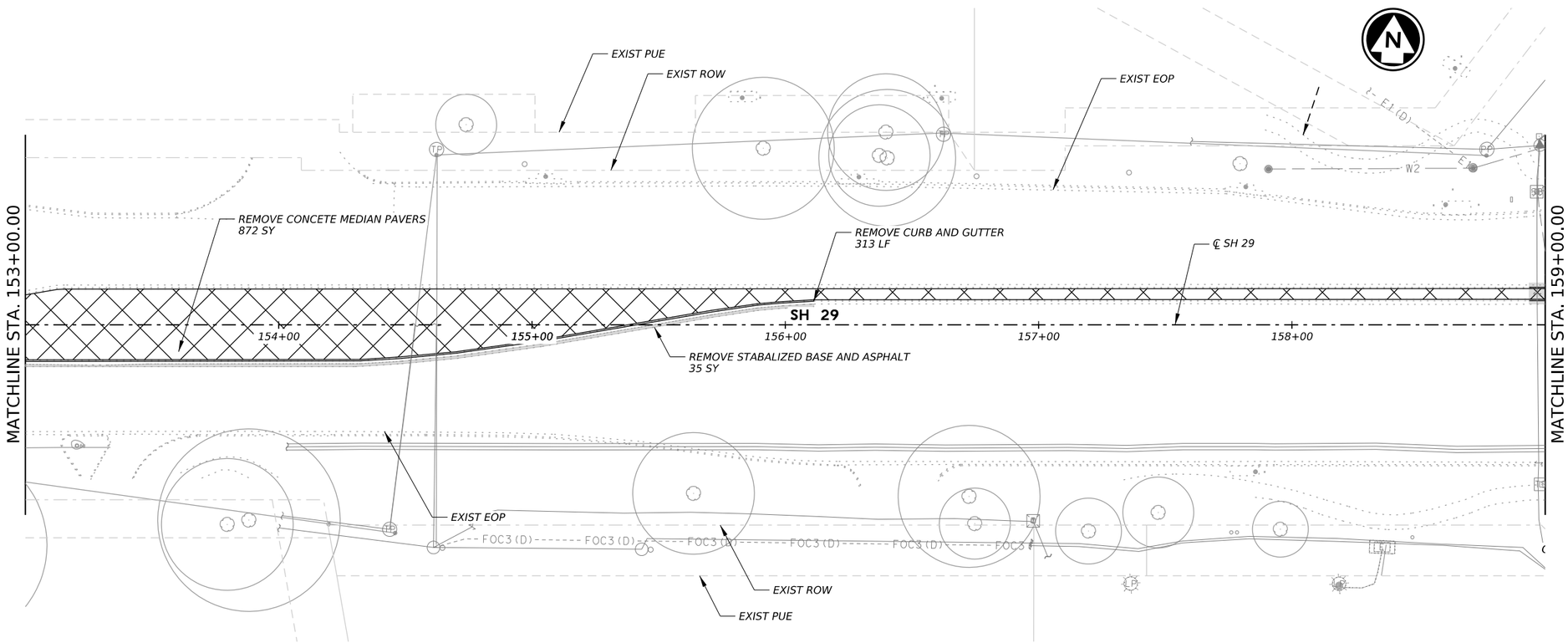

12/18/2025

STATE OF TEXAS
TYLER G. MITCHELL
139240
LICENSED
PROFESSIONAL ENGINEER

GEORGETOWN TEXAS
more than welcome

Kimley»Horn F-928

Texas Department of Transportation

SH 29

REMOVAL LAYOUT
BEGIN TO STA 159+00

SHEET 1 OF 4

CONT	SECT	JOB	HIGHWAY
0337	01	053	SH 29
DIST		COUNTY	SHEET NO.
AUS		WILLIAMSON	79

DATE: 12/18/2025 1:54:07 PM
FILE: pw://kh-pw.bentley.com:kh-pw-01/Documents/01 Active Projects/TX-GEO-069284005 - SH 29 Widening/4 - Design/Plan Set/10. Miscellaneous/SH_29_K_REM_01.dgn

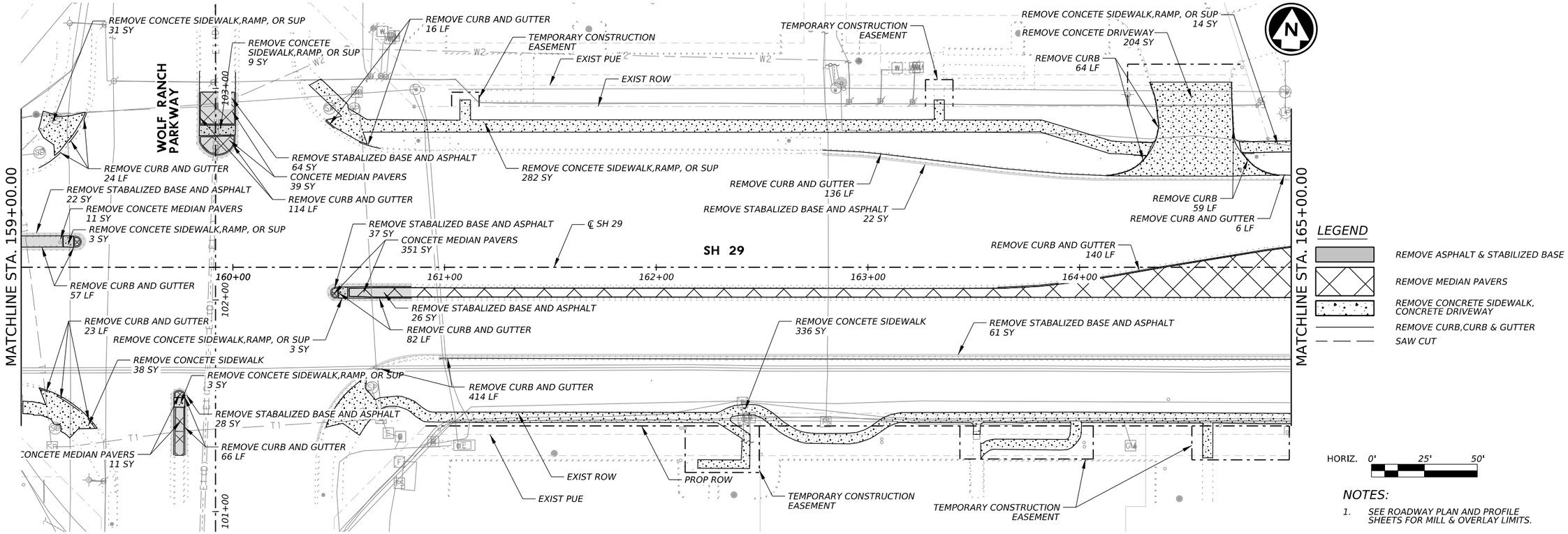

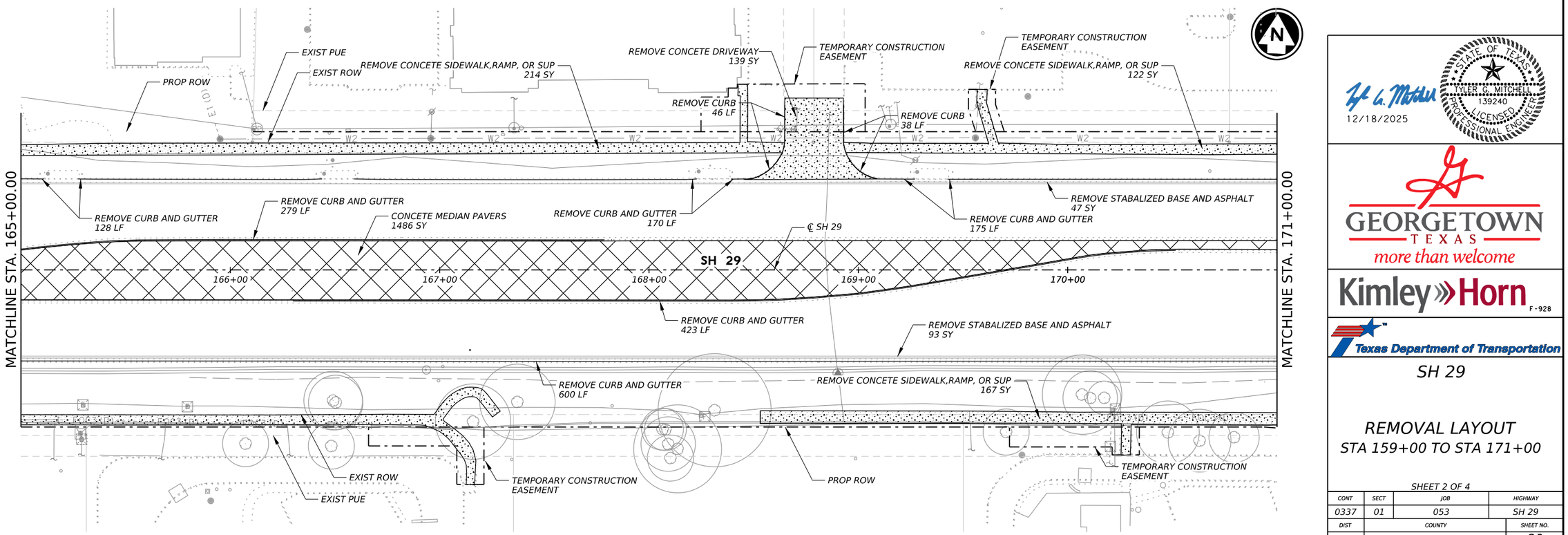

DATE: 12/18/2025 1:54:26 PM
FILE: pw://kh-pw.bentley.com:kh-pw-01/Documents/01 Active Projects/TX-GEO-069284005 - SH 29 Widening/4 - Design/Plan Set/10. Miscellaneous/SH_29_K_REM_02.dgn

DW: CK: DW: CK:

12/18/2025

STATE OF TEXAS
TYLER G. MITCHELL
139240
LICENSED
PROFESSIONAL ENGINEER

GEORGETOWN TEXAS
more than welcome

Kimley»Horn F-928

Texas Department of Transportation

SH 29

REMOVAL LAYOUT
STA 159+00 TO STA 171+00

SHEET 2 OF 4

CONT	SECT	JOB	HIGHWAY
0337	01	053	SH 29
DIST	COUNTY		SHEET NO.
AUS	WILLIAMSON		80

MATCHLINE STA. 8+75.00

REMOVE CURB AND GUTTER
11 LF

℄ WOLF LAKES DR

WOLF LAKES DRIVE

8+00

W2

W2 (D)

EXIST PUE

PROP ROW

EXIST ROW

REMOVE CURB AND GUTTER
82 LF

REMOVE CONCETE SIDEWALK,RAMP, OR SUP
239 SY

REMOVE CONCETE DRIVEWAY
134 SY

TEMPORARY CONSTRUCTION
EASEMENT

PROP PUE

PROP ROW

REMOVE CONCETE SIDEWALK,RAMP, OR SUP
175 SY

EXIST PUE

TEMPORARY CONSTRUCTION
EASEMENT

EXIST ROW

REMOVE CURB
36 LF

REMOVE CURB
35 LF

REMOVE CONCETE SIDEWALK,RAMP, OR SUP
188 SY

REMOVE CURB AND GUTTER
183 LF

REMOVE STABALIZED BASE AND ASPHALT
20 SY

REMOVE CURB AND GUTTER
46 LF

REMOVE CURB AND GUTTER
88 LF

REMOVE CURB AND GUTTER
322 LF

CONCETE MEDIAN PAVERS
123 SY

REMOVE STABALIZED BASE AND ASPHALT
60 SY

REMOVE STABALIZED BASE AND ASPHALT
37 SY

REMOVE CONCETE SIDEWALK,RAMP, OR SUP
3 SY

CONCETE MEDIAN PAVERS
109 SY

REMOVE STABALIZED BASE AND ASPHALT
34 SY

SH 29

172+00

173+00

174+00

175+00

176+00

℄ SH 29

REMOVE CURB AND GUTTER
61 LF

REMOVE CONCETE SIDEWALK,RAMP, OR SUP
3 SY

REMOVE CURB AND GUTTER
72 LF

REMOVE CURB AND GUTTER
281 LF

REMOVE STABALIZED BASE AND ASPHALT
48 SY

REMOVE CURB AND GUTTER
315 LF

REMOVE CURB AND GUTTER
150 LF

REMOVE
CONCETE
SIDEWALK,
RAMP,
OR SUP
6 SY

REMOVE STABALIZED BASE AND ASPHALT
47 SY

REMOVE CONCETE SIDEWALK,RAMP, OR SUP
195 SY

REMOVE CONCETE SIDEWALK,RAMP, OR SUP
179 SY

EXIST PUE

PROP ROW

EXIST ROW

REMOVAL OF EXISTING BUSINESS SIGN
CONSIDERED SUBSIDIARY TO PREP ROW

REMOVE STONE RETAINING WALL
135 LF

REMOVE STABALIZED BASE AND ASPHALT
60 SY

TEMPORARY CONSTRUCTION
EASEMENT

CONCETE MEDIAN PAVERS
35 SY

EXIST PUE

PROP ROW

EXIST ROW

TEMPORARY
CONSTRUCTION
EASEMENT

MATCHLINE STA. 171+00.00

MATCHLINE STA. 177+00.00

MATCHLINE STA. 8+75.00

13+00

12+00

11+00

10+00

9+00

WOLF LAKES DRIVE

LEGEND

- REMOVE ASPHALT & STABILIZED BASE
- REMOVE MEDIAN PAVERS
- REMOVE CONCRETE SIDEWALK, CONCRETE DRIVEWAY
- REMOVE CURB,CURB & GUTTER
- SAW CUT

HORIZ. 0' 25' 50'

NOTES:

1. SEE ROADWAY PLAN AND PROFILE SHEETS FOR MILL & OVERLAY LIMITS.

STATE OF TEXAS
TYLER G. MITCHELL
139240
LICENSED
PROFESSIONAL ENGINEER

12/18/2025

GEORGETOWN
TEXAS
more than welcome

Kimley»Horn F-928

Texas Department of Transportation

SH 29

REMOVAL LAYOUT
STA 171+00 TO STA 177+00

SHEET 3 OF 4

CONT	SECT	JOB	HIGHWAY
0337	01	053	SH 29
DIST	COUNTY		SHEET NO.
AUS	WILLIAMSON		81

DATE: 12/18/2025 1:54:44 PM
FILE: pw://kh-pw.bentley.com:kh-pw-01/Documents/01 Active Projects/TX-GEO-069284005 - SH 29 Widening/4 - Design/Plan Set/10. Miscellaneous/SH 29_K_REM_03.dgn

DW: CK: DW: CK:

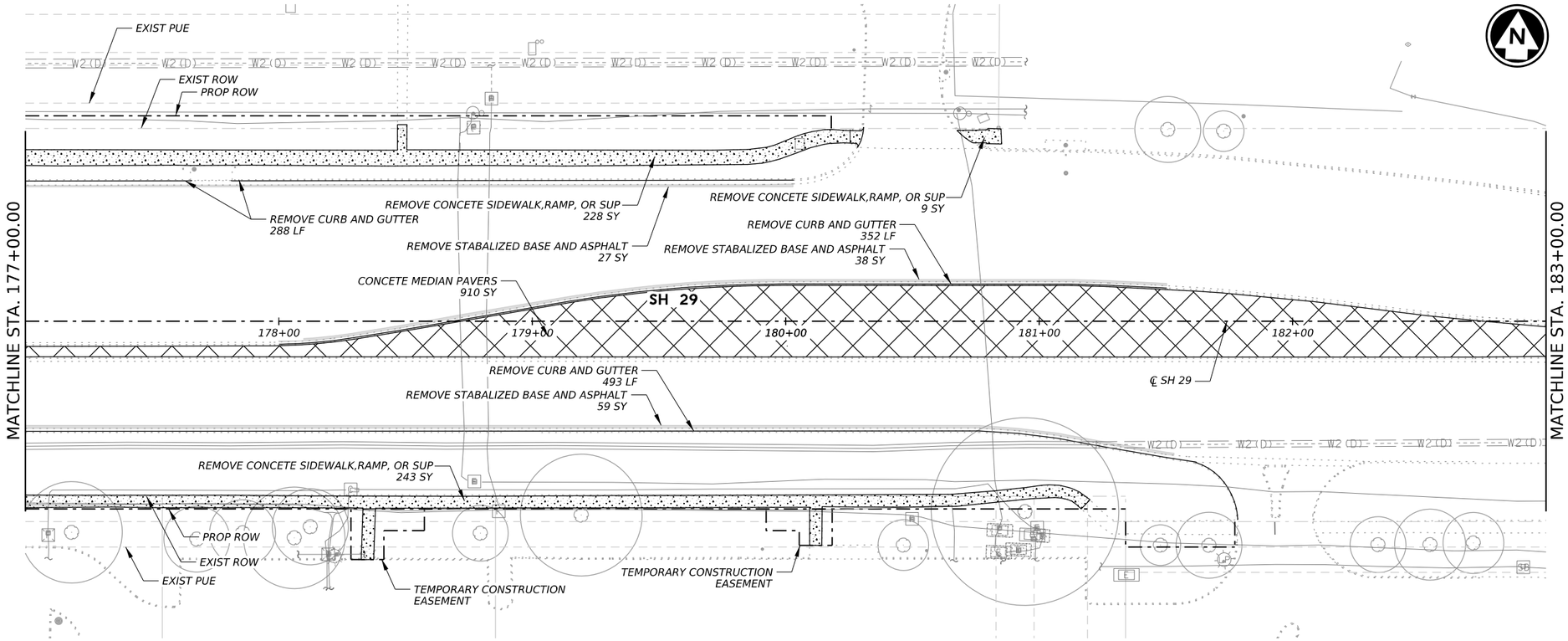

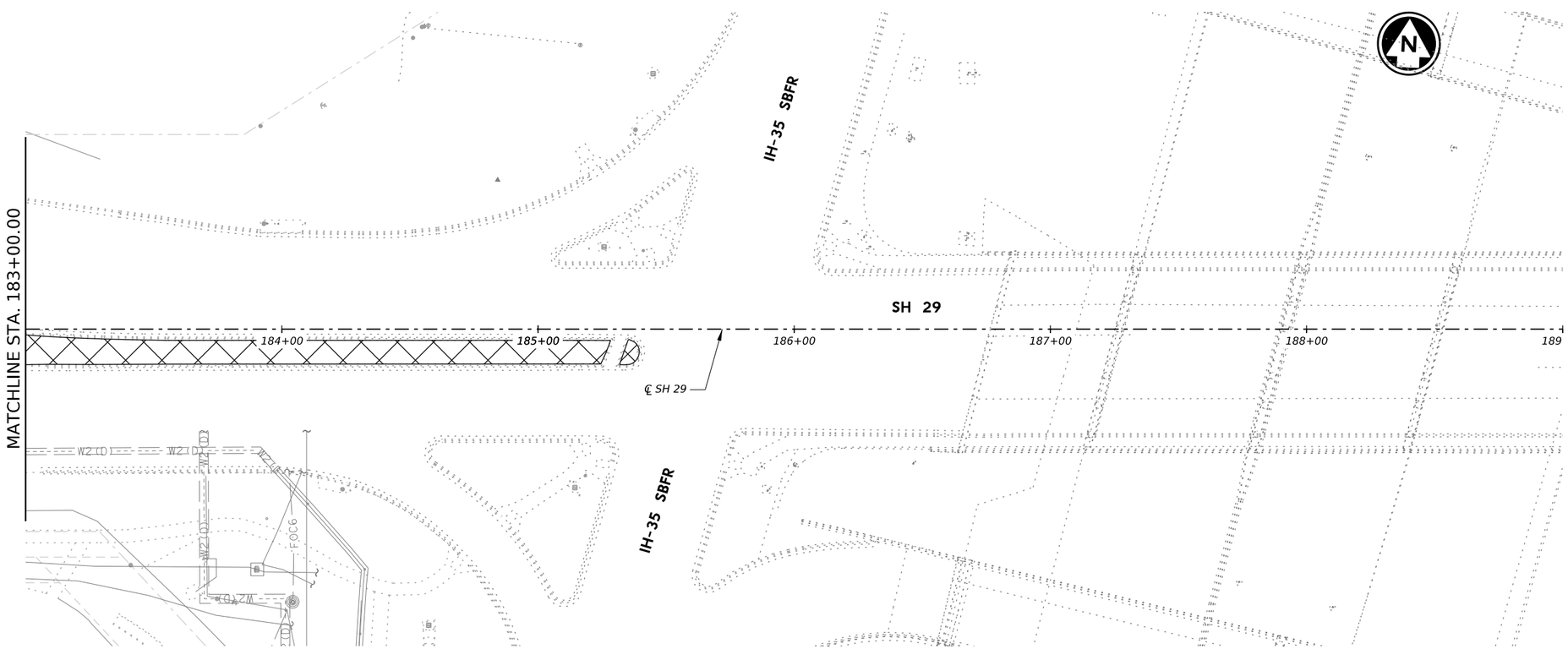

LEGEND

- REMOVE ASPHALT & STABILIZED BASE
- REMOVE MEDIAN PAVERS
- REMOVE CONCRETE SIDEWALK, CONCRETE DRIVEWAY
- REMOVE CURB,CURB & GUTTER
- SAW CUT

HORIZ. 0' 25' 50'

NOTES:

1. SEE ROADWAY PLAN AND PROFILE SHEETS FOR MILL & OVERLAY LIMITS.

TYLER G. MITCHELL
139240
LICENSED PROFESSIONAL ENGINEER
STATE OF TEXAS
12/18/2025

GEORGETOWN TEXAS
more than welcome

Kimley»Horn F-928

Texas Department of Transportation

SH 29

REMOVAL LAYOUT
STA 177+00 TO END

SHEET 4 OF 4

CONT	SECT	JOB	HIGHWAY
0337	01	053	SH 29
DIST	COUNTY		SHEET NO.
AUS	WILLIAMSON		82

DATE: 12/18/2025 1:55:03 PM
FILE: pw://kh-pw.bentley.com:kh-pw-01/Documents/01 Active Projects/TX-GEO-069284005 - SH 29 Widening/4 - Design/Plan Set/10. Miscellaneous/SH 29_K_REM_04.dgn

DW: CK: DW: CK:

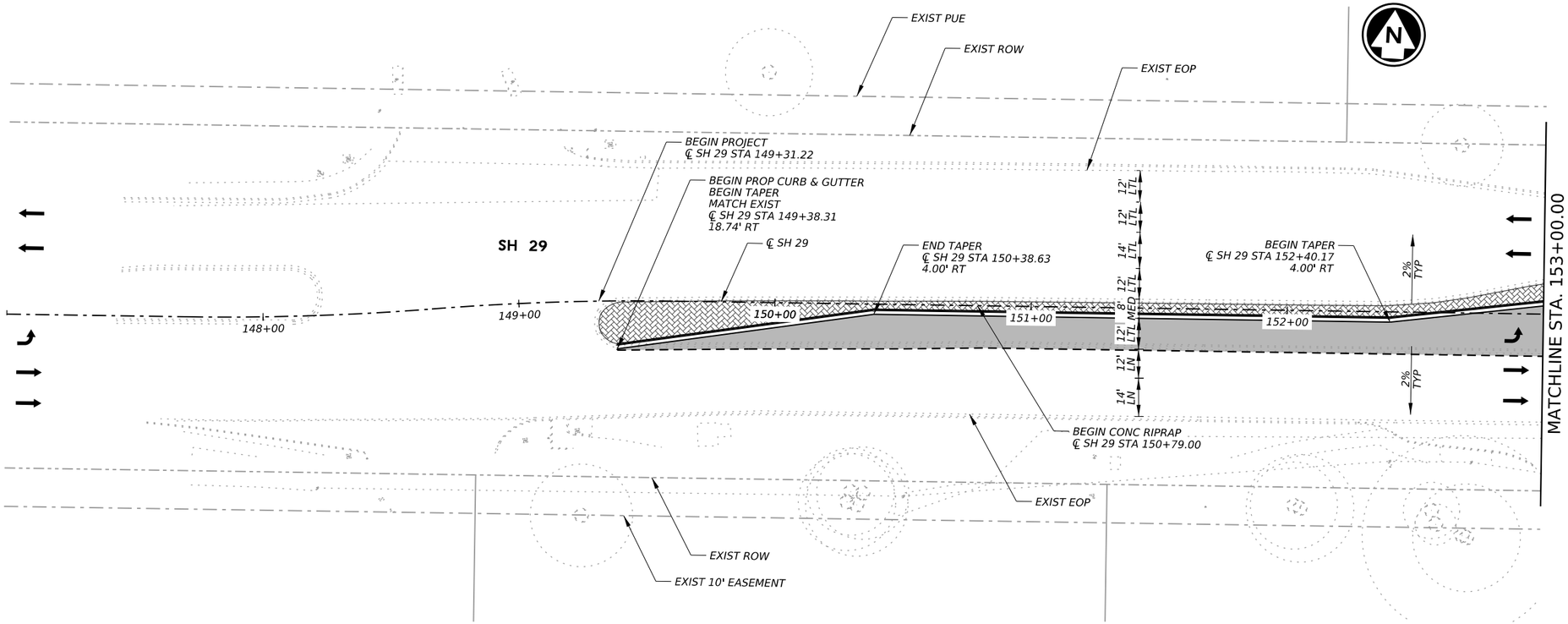

LEGEND

- GEOR OVERHEAD ELECTRIC
- GEOR UTILITY SYSTEM ELECTRIC
- PEC ELECTRIC
- PRIVATE ELECTRIC
- TXDOT TRAFFIC SIGNAL
- ATT FIBER OPTIC
- FIBERLIGHT FIBER OPTIC
- FRONTIER FIBER OPTIC
- MCI FIBER OPTIC
- OPTIMUM FIBER OPTIC
- CITY OF GEORGETOWN WATER
- CITY OF ROUND ROCK WATER
- ATMOS GAS
- CITY OF GEORGETOWN WW
- CITY OF GEORGETOWN WW
- UNKNOWN
- EXIST PROPERTY LINE
- EXIST ROW
- EXIST PUBLIC UTILITY EASEMENT
- PROP ROW
- TEMP CONSTRUCTION EASEMENT
- PROP PUBLIC UTILITY EASEMENT
- SAWCUT
- PROP WIDENING
- PROP MILL & OVERLAY
- PROP CONCRETE DRIVEWAY & SUP
- PROP STAMPED CONCRETE

NOTES:

1. REFER TO DRIVEWAY PLAN AND PROFILE SHEETS FOR MORE INFORMATION.
2. DIMENSIONS AND OFFSETS ARE TO LIP OF GUTTER UNLESS NOTED OTHERWISE.
3. REFER TO INTERSECTION LAYOUTS AND SIDEWALK DETAILS FOR MORE INFORMATION.
4. ALL SAWCUT LINES LOCATED 1' FROM EXISTING LIP OF GUTTER.

0' 25' 50' HORZ
0' 2.5' 5' VERT

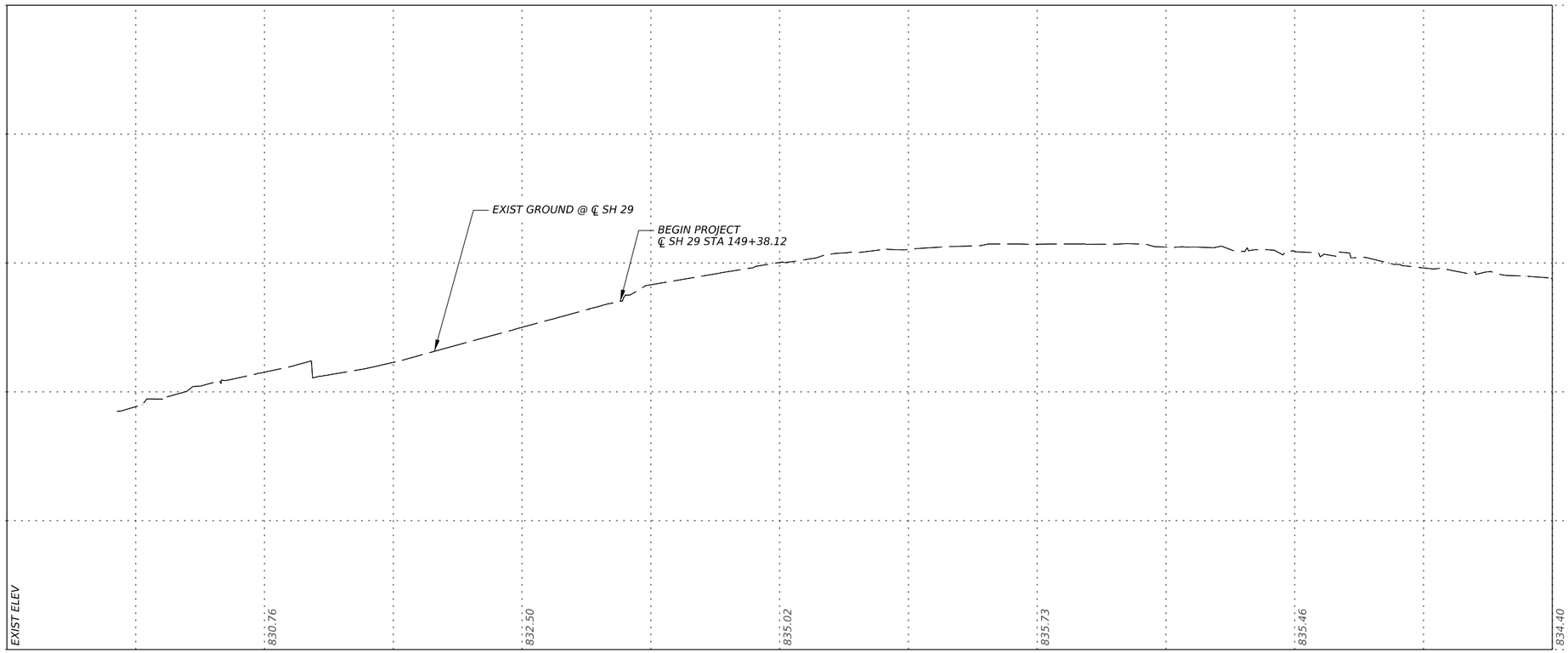

12/18/2025

STATE OF TEXAS
TYLER G. MITCHELL
139240
LICENSED
PROFESSIONAL ENGINEER

GEORGETOWN TEXAS
more than welcome

Kimley»Horn F-928

Texas Department of Transportation

SH 29

ROADWAY PLAN & PROFILE
BEGIN TO STA 153+00

SHEET 1 OF 6

CONT	SECT	JOB	HIGHWAY
0337	01	053	SH 29
DIST	COUNTY		SHEET NO.
AUS	WILLIAMSON		83

DATE: 12/18/2025 1:55:27 PM
FILE: pw://kh-pw.bentley.com:kh-pw-01/Documents/01 Active Projects/TX-GEO-069284005 - SH 29 Widening/4 - Design/Plan Set/3. Roadway/SH29_K_ROW_PP01

DW: CK: DW: CK:

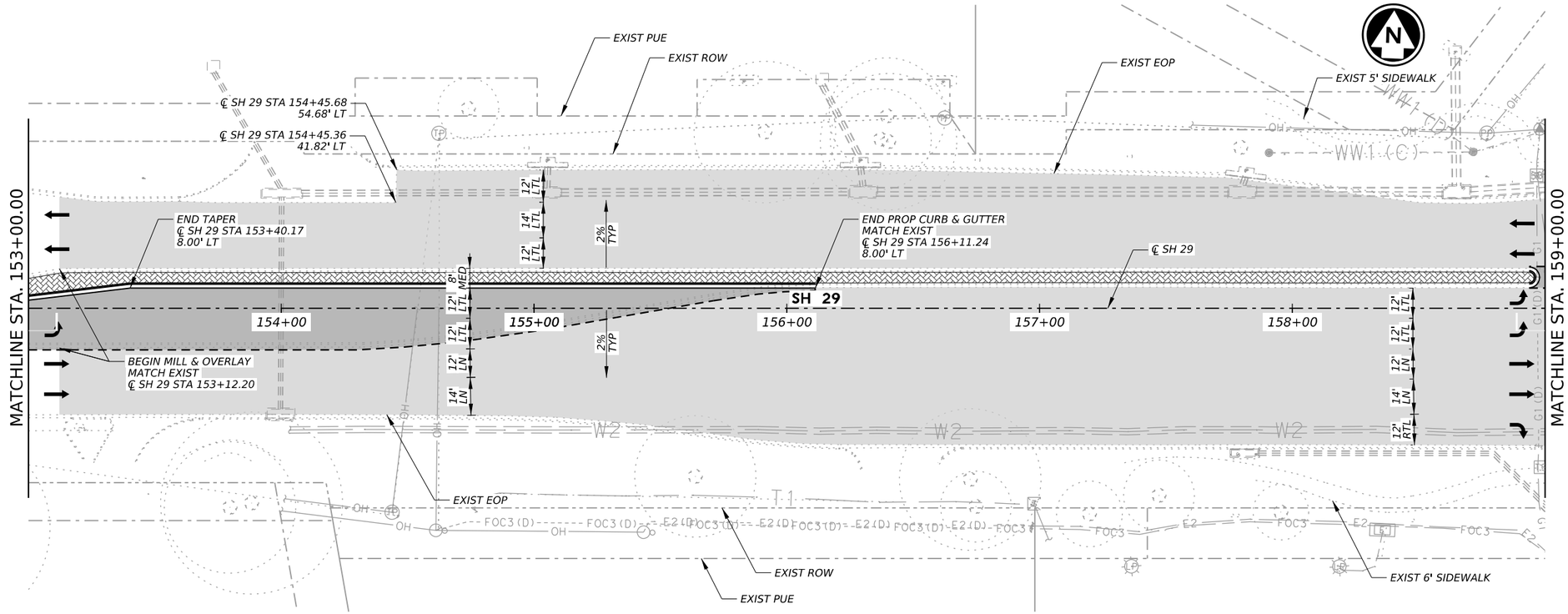

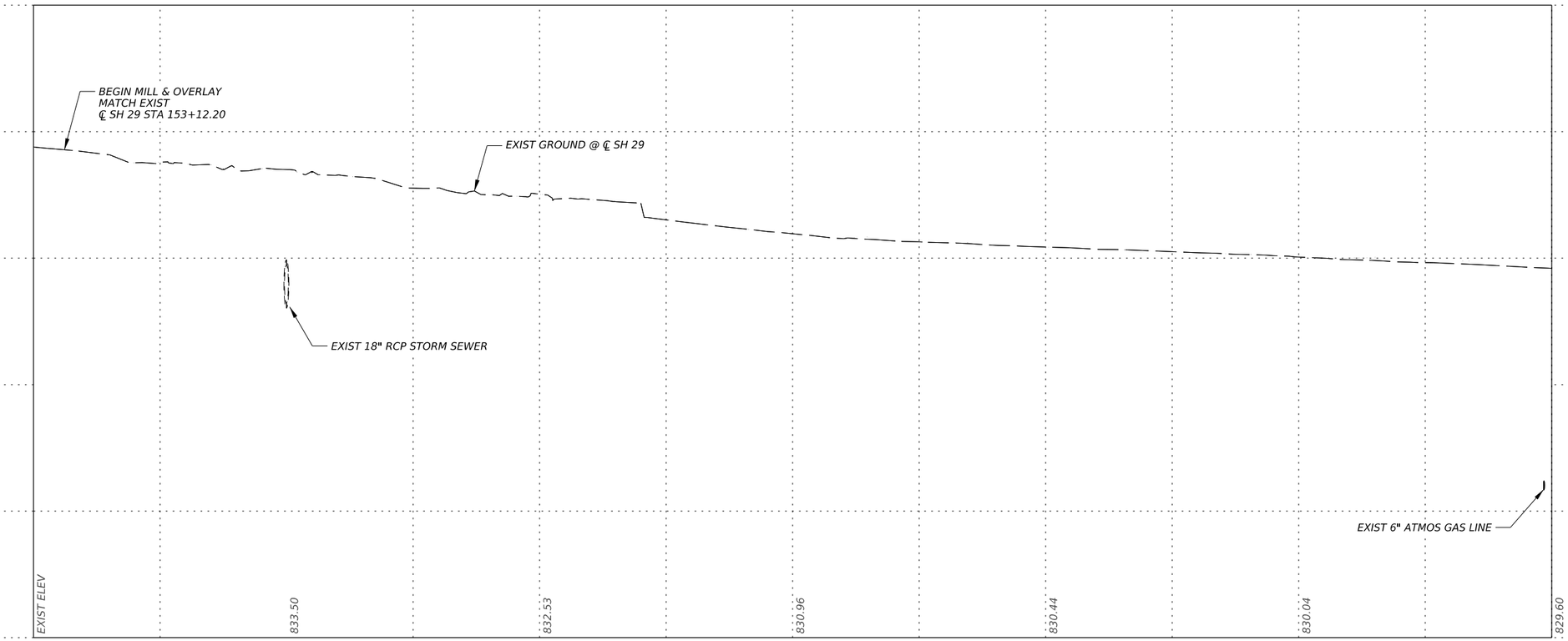

LEGEND

OH	GEOR OVERHEAD ELECTRIC
E1	GEOR UTILITY SYSTEM ELECTRIC
E2	PEC ELECTRIC
E3	PRIVATE ELECTRIC
TS1	TXDOT TRAFFIC SIGNAL
FOC1	ATT FIBER OPTIC
FOC2	FIBERLIGHT FIBER OPTIC
FOC3	FRONTIER FIBER OPTIC
FOC4	MCI FIBER OPTIC
FOC5	OPTIMUM FIBER OPTIC
W1	CITY OF GEORGETOWN WATER
W2	CITY OF ROUND ROCK WATER
G1	ATMOS GAS
WW1 (C)	CITY OF GEORGETOWN WW
WW1 (D)	CITY OF GEORGETOWN WW
	UNKNOWN
	EXIST PROPERTY LINE
	EXIST ROW
	EXIST PUBLIC UTILITY EASEMENT
	PROP ROW
	TEMP CONSTRUCTION EASEMENT
	PROP PUBLIC UTILITY EASEMENT
	SAWCUT
	PROP WIDENING
	PROP MILL & OVERLAY
	PROP CONCRETE DRIVEWAY & SUP
	PROP STAMPED CONCRETE

NOTES:

1. REFER TO DRIVEWAY PLAN AND PROFILE SHEETS FOR MORE INFORMATION.
2. DIMENSIONS AND OFFSETS ARE TO LIP OF GUTTER UNLESS NOTED OTHERWISE.
3. REFER TO INTERSECTION LAYOUTS AND SIDEWALK DETAILS FOR MORE INFORMATION.
4. ALL SAWCUT LINES LOCATED 1' FROM EXISTING LIP OF GUTTER.

0' 25' 50' HORZ
0' 2.5' 5' VERT

STATE OF TEXAS
TYLER G. MITCHELL
139240
LICENSED
PROFESSIONAL ENGINEER
12/18/2025

GEORGETOWN TEXAS
more than welcome

Kimley»Horn F-928

Texas Department of Transportation

SH 29

ROADWAY PLAN & PROFILE
STA 153+00 TO STA 159+00

SHEET 2 OF 7

CONT	SECT	JOB	HIGHWAY
0337	01	053	SH 29
DIST	COUNTY		SHEET NO.
AUS	WILLIAMSON		84

DATE: 12/18/2025 1:55:49 PM
FILE: pw://kh-pw.bentley.com:kh-pw-01/Documents/01 Active Projects/TX-GEO-069284005 - SH 29 Widening/4 - Design/Plan Set/3. Roadway/SH29_K_ROW_PP02

DW: CK: DW: CK:

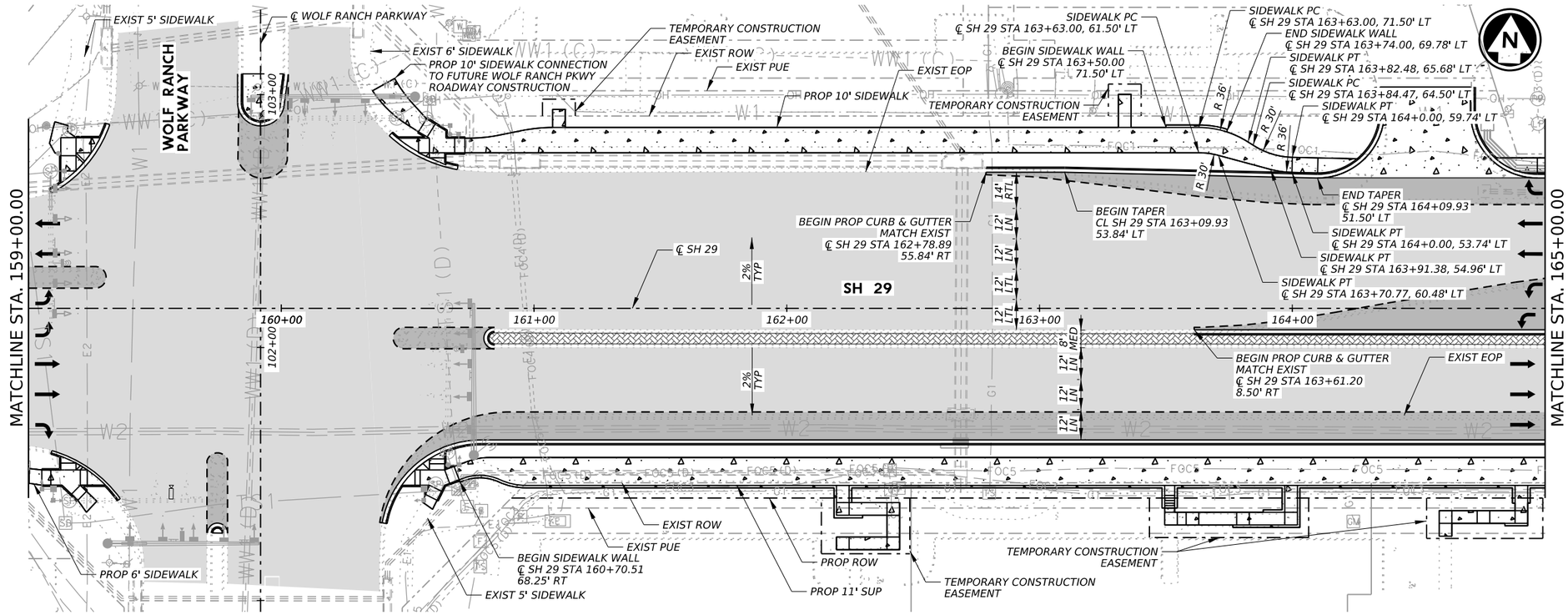

LEGEND

OH	GEOR OVERHEAD ELECTRIC
E1	GEOR UTILITY SYSTEM ELECTRIC
E2	PEC ELECTRIC
E3	PRIVATE ELECTRIC
TS1	TXDOT TRAFFIC SIGNAL
FOC1	ATT FIBER OPTIC
FOC2	FIBERLIGHT FIBER OPTIC
FOC3	FRONTIER FIBER OPTIC
FOC4	MCI FIBER OPTIC
FOC5	OPTIMUM FIBER OPTIC
W1	CITY OF GEORGETOWN WATER
W2	CITY OF ROUND ROCK WATER
G1	ATMOS GAS
WW1 (C)	CITY OF GEORGETOWN WW
WW1 (D)	CITY OF GEORGETOWN WW
	UNKNOWN
	EXIST PROPERTY LINE
	EXIST ROW
	EXIST PUBLIC UTILITY EASEMENT
	PROP ROW
	TEMP CONSTRUCTION EASEMENT
	PROP PUBLIC UTILITY EASEMENT
	SAWCUT
	PROP WIDENING
	PROP MILL & OVERLAY
	PROP CONCRETE DRIVEWAY & SUP
	PROP STAMPED CONCRETE

NOTES:

1. REFER TO DRIVEWAY PLAN AND PROFILE SHEETS FOR MORE INFORMATION.
2. DIMENSIONS AND OFFSETS ARE TO LIP OF GUTTER UNLESS NOTED OTHERWISE.
3. REFER TO INTERSECTION LAYOUTS AND SIDEWALK DETAILS FOR MORE INFORMATION.
4. ALL SAWCUT LINES LOCATED 1' FROM EXISTING LIP OF GUTTER.

0' 25' 50' HORZ
0' 2.5' 5' VERT

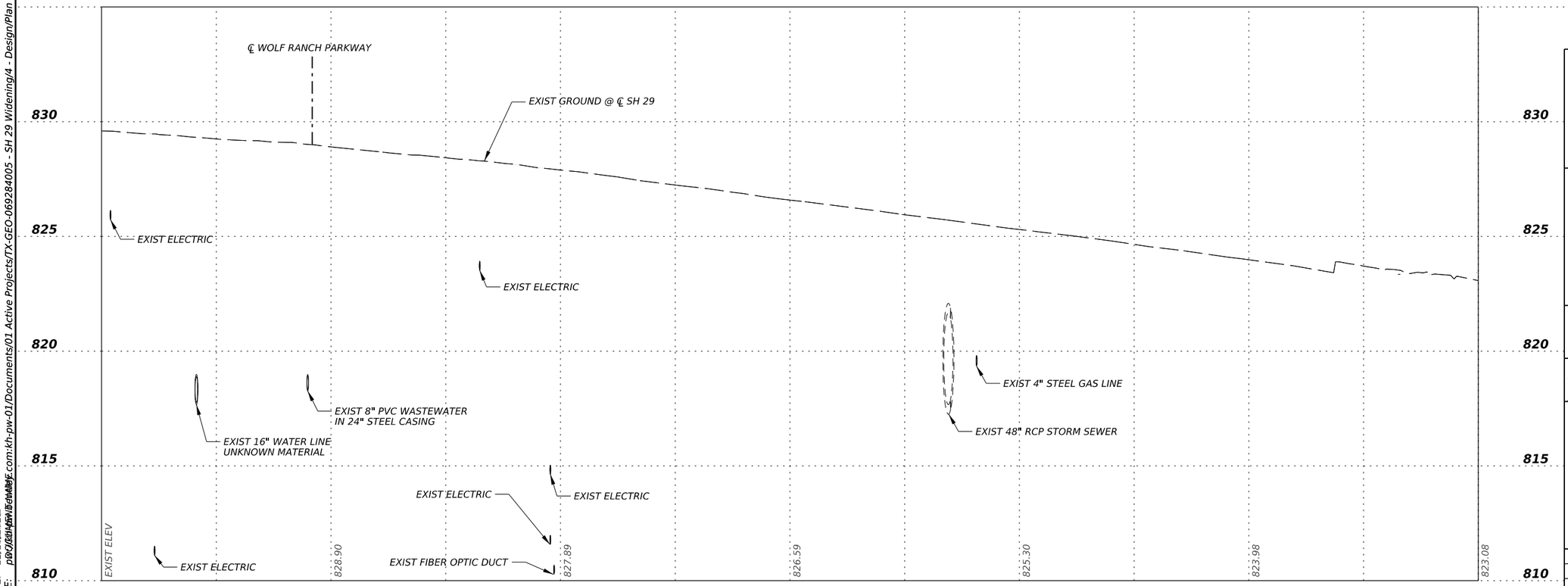

12/18/2025

STATE OF TEXAS
TYLER G. MITCHELL
139240
LICENSED
PROFESSIONAL ENGINEER

GEORGETOWN TEXAS
more than welcome

Kimley»Horn F-928

Texas Department of Transportation

SH 29

ROADWAY PLAN & PROFILE
STA 159+00 TO 165+00

SHEET 3 OF 7

CONT	SECT	JOB	HIGHWAY
0337	01	053	SH 29
DIST		COUNTY	SHEET NO.
AUS		WILLIAMSON	85

DATE: 12/18/2025 1:56:08 PM
FILE: pw:\\kimley-horn.com:kh-pw-01/Documents/01 Active Projects/TX-GEO-069284005 - SH 29 Widening/4 - Design/Plan Set/3. Roadway/SH29_K_RDW_PP03

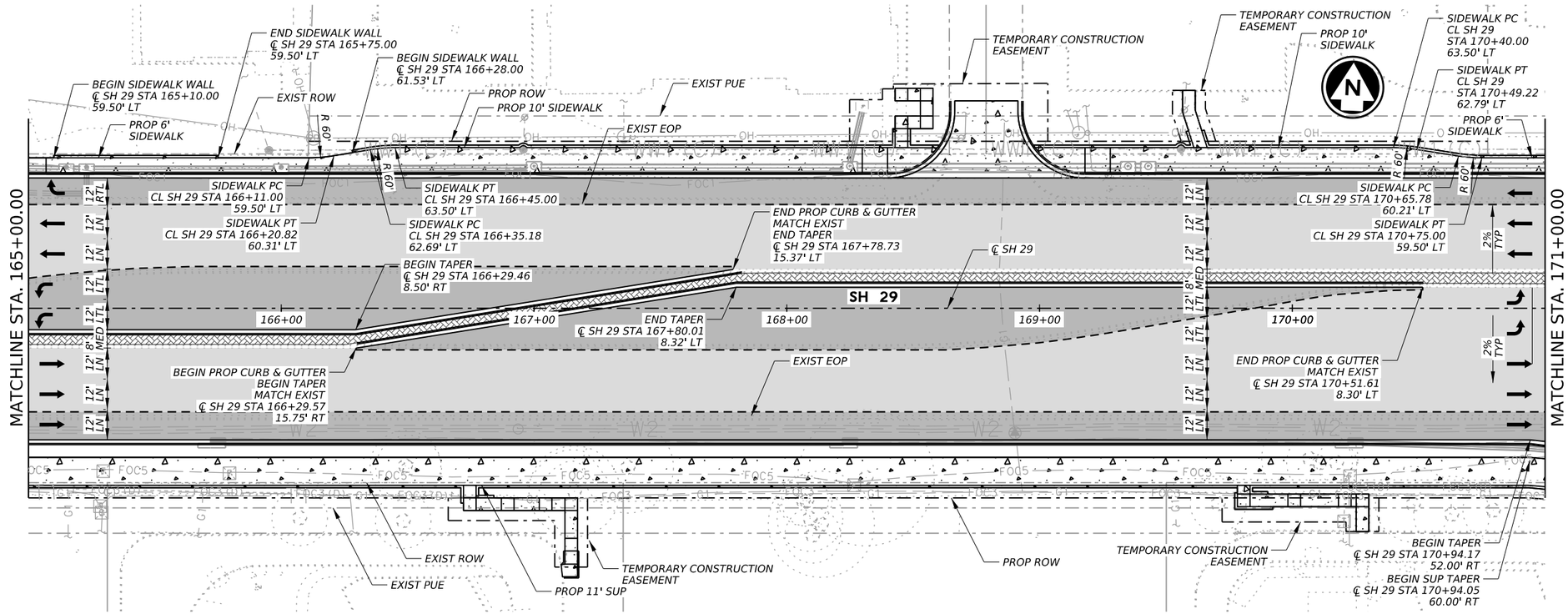

LEGEND

- OH — GEOR OVERHEAD ELECTRIC
- E1 — GEOR UTILITY SYSTEM ELECTRIC
- E2 — PEC ELECTRIC
- E3 — PRIVATE ELECTRIC
- TS1 — TXDOT TRAFFIC SIGNAL
- FOC1 — ATT FIBER OPTIC
- FOC2 — FIBERLIGHT FIBER OPTIC
- FOC3 — FRONTIER FIBER OPTIC
- FOC4 — MCI FIBER OPTIC
- FOC5 — OPTIMUM FIBER OPTIC
- W1 — CITY OF GEORGETOWN WATER
- W2 — CITY OF ROUND ROCK WATER
- G1 — ATMOS GAS
- WW1 (C) — CITY OF GEORGETOWN WW
- WW1 (D) — CITY OF GEORGETOWN WW
- UNKNOWN
- EXIST PROPERTY LINE
- EXIST ROW
- EXIST PUBLIC UTILITY EASEMENT
- PROP ROW
- TEMP CONSTRUCTION EASEMENT
- PROP PUBLIC UTILITY EASEMENT
- SAWCUT
- PROP WIDENING
- PROP MILL & OVERLAY
- PROP CONCRETE DRIVEWAY & SUP
- PROP STAMPED CONCRETE

NOTES:

1. REFER TO DRIVEWAY PLAN AND PROFILE SHEETS FOR MORE INFORMATION.
2. DIMENSIONS AND OFFSETS ARE TO LIP OF GUTTER UNLESS NOTED OTHERWISE.
3. REFER TO INTERSECTION LAYOUTS AND SIDEWALK DETAILS FOR MORE INFORMATION.
4. ALL SAWCUT LINES LOCATED 1' FROM EXISTING LIP OF GUTTER.

0' 25' 50' HORZ
0' 2.5' 5' VERT

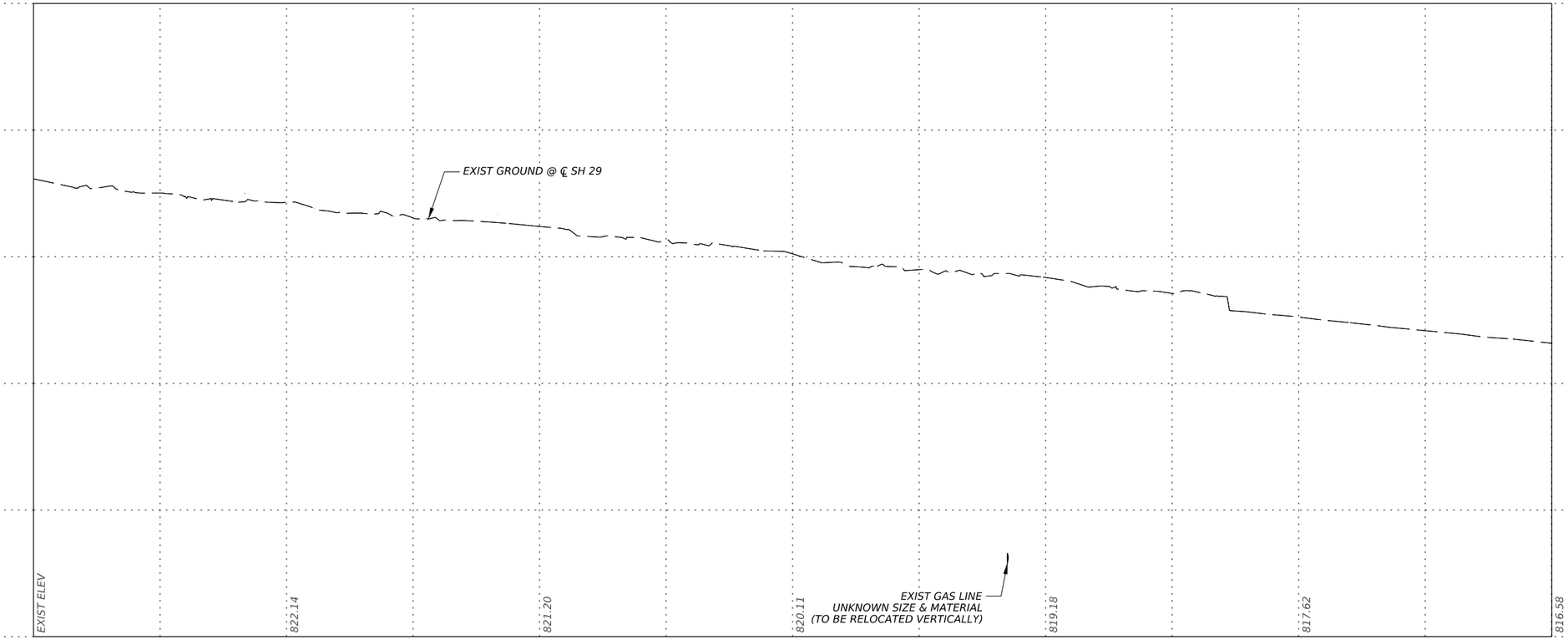

1/21/2026

STATE OF TEXAS
TYLER G. MITCHELL
139240
LICENSED
PROFESSIONAL ENGINEER

GEORGETOWN
TEXAS
more than welcome

Kimley»Horn F-928

Texas Department of Transportation

SH 29

ROADWAY PLAN & PROFILE
STA 165+00 TO STA 171+00

SHEET 4 OF 7

CONT	SECT	JOB	HIGHWAY
0337	01	053	SH 29
DIST	COUNTY		SHEET NO.
AUS	WILLIAMSON		86

DATE: 1/21/2026 9:40:33 AM
FILE: pw://kh-pw.bentley.com:kh-pw-01/Documents/01 Active Projects/TX-GEO-069284005 - SH 29 Widening/4 - Design/Plan Set/3. Roadway/SH29_K_ROW_PP04

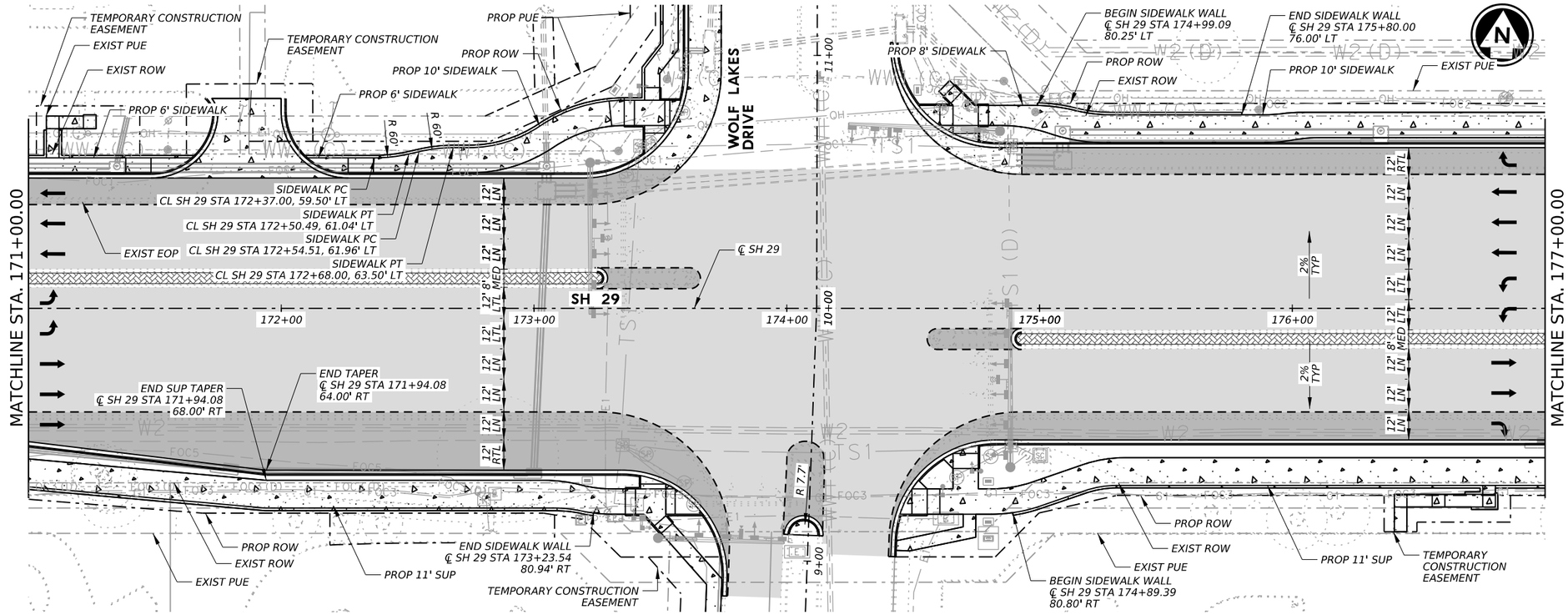

LEGEND

- GEOR OVERHEAD ELECTRIC
- GEOR UTILITY SYSTEM ELECTRIC
- PEC ELECTRIC
- PRIVATE ELECTRIC
- TXDOT TRAFFIC SIGNAL
- ATT FIBER OPTIC
- FIBERLIGHT FIBER OPTIC
- FRONTIER FIBER OPTIC
- MCI FIBER OPTIC
- OPTIMUM FIBER OPTIC
- CITY OF GEORGETOWN WATER
- CITY OF ROUND ROCK WATER
- ATMOS GAS
- CITY OF GEORGETOWN WW
- CITY OF GEORGETOWN WW
- UNKNOWN
- EXIST PROPERTY LINE
- EXIST ROW
- EXIST PUBLIC UTILITY EASEMENT
- PROP ROW
- TEMP CONSTRUCTION EASEMENT
- PROP PUBLIC UTILITY EASEMENT
- SAWCUT
- PROP WIDENING
- PROP MILL & OVERLAY
- PROP CONCRETE DRIVEWAY & SUP
- PROP STAMPED CONCRETE

NOTES:

1. REFER TO DRIVEWAY PLAN AND PROFILE SHEETS FOR MORE INFORMATION.
2. DIMENSIONS AND OFFSETS ARE TO LIP OF GUTTER UNLESS NOTED OTHERWISE.
3. REFER TO INTERSECTION LAYOUTS AND SIDEWALK DETAILS FOR MORE INFORMATION.
4. ALL SAWCUT LINES LOCATED 1' FROM EXISTING LIP OF GUTTER.

0' 25' 50' HORZ
0' 2.5' 5' VERT

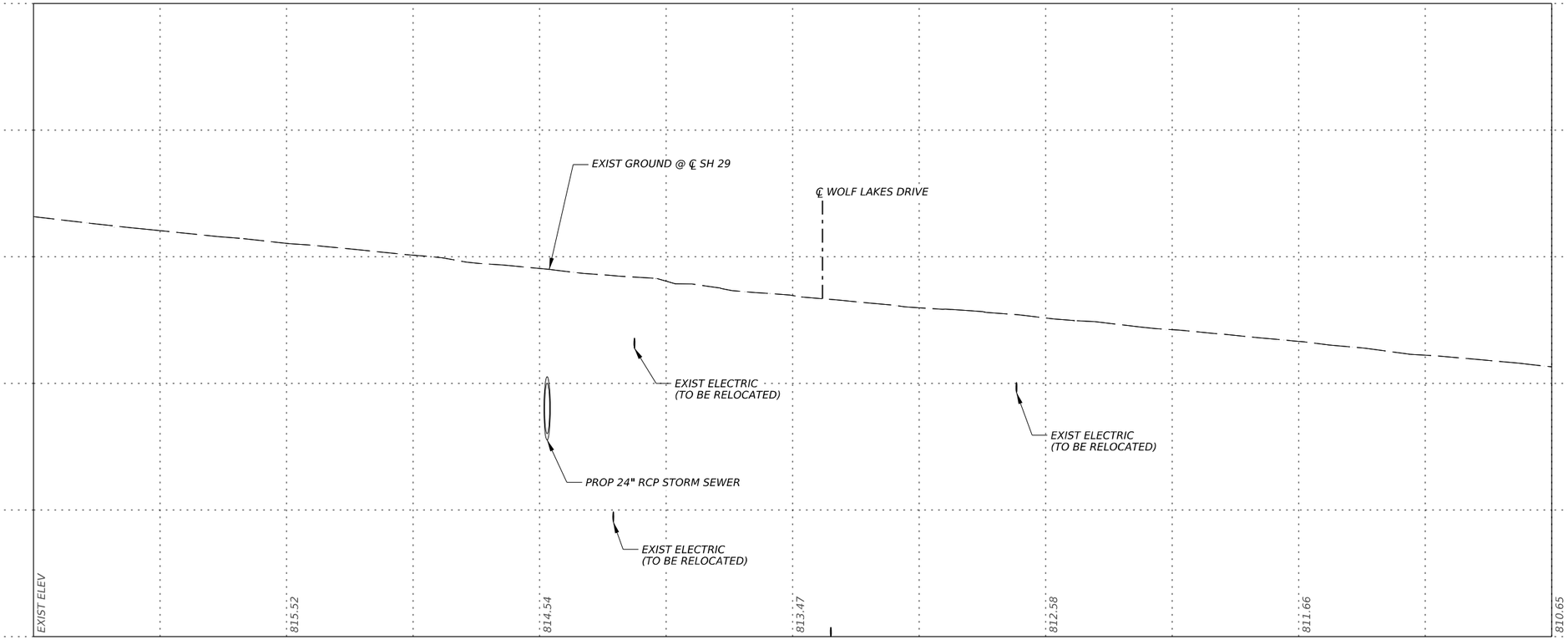

1/21/2026

STATE OF TEXAS
TYLER G. MITCHELL
139240
LICENSED
PROFESSIONAL ENGINEER

GEORGETOWN TEXAS
more than welcome

Kimley»Horn F-928

Texas Department of Transportation

SH 29

ROADWAY PLAN & PROFILE
STA 171+00 TO STA 177+00

SHEET 5 OF 7

CONT	SECT	JOB	HIGHWAY
0337	01	053	SH 29
DIST	COUNTY		SHEET NO.
AUS	WILLIAMSON		87

DATE: 1/21/2026 9:41:44 AM
FILE: pw://kh-pw.bentley.com:kh-pw-01/Documents/01 Active Projects/TX-GEO-069284005 - SH 29 Widening/4 - Design/Plan Set/3. Roadway/SH29_K_ROW_PP05

DW: CK: DW: CK:

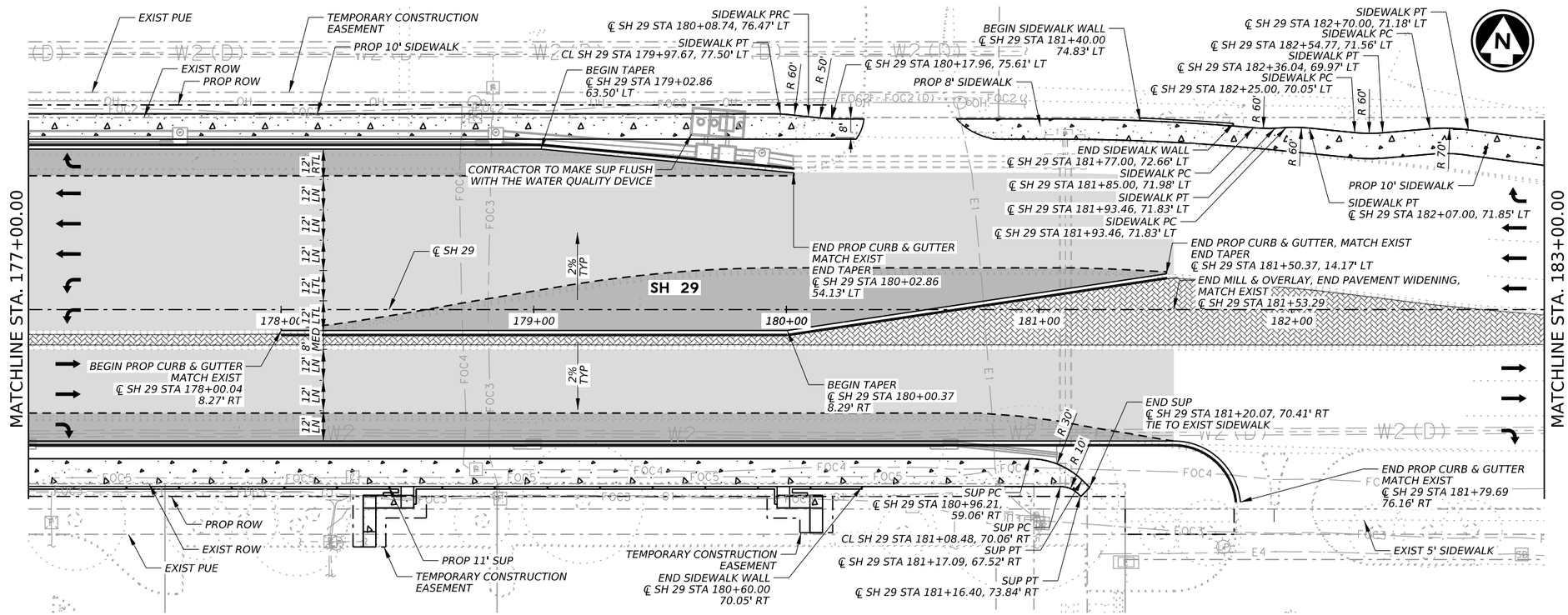

LEGEND

- GEOR OVERHEAD ELECTRIC
- GEOR UTILITY SYSTEM ELECTRIC
- PEC ELECTRIC
- PRIVATE ELECTRIC
- TXDOT TRAFFIC SIGNAL
- ATT FIBER OPTIC
- FIBERLIGHT FIBER OPTIC
- FRONTIER FIBER OPTIC
- MCI FIBER OPTIC
- OPTIMUM FIBER OPTIC
- CITY OF GEORGETOWN WATER
- CITY OF ROUND ROCK WATER
- ATMOS GAS
- CITY OF GEORGETOWN WW
- CITY OF GEORGETOWN WW
- UNKNOWN
- EXIST PROPERTY LINE
- EXIST ROW
- EXIST PUBLIC UTILITY EASEMENT
- PROP ROW
- TEMP CONSTRUCTION EASEMENT
- PROP PUBLIC UTILITY EASEMENT
- SAWCUT
- PROP WIDENING
- PROP MILL & OVERLAY
- PROP CONCRETE DRIVEWAY & SUP
- PROP STAMPED CONCRETE

NOTES:

1. REFER TO DRIVEWAY PLAN AND PROFILE SHEETS FOR MORE INFORMATION.
2. DIMENSIONS AND OFFSETS ARE TO LIP OF GUTTER UNLESS NOTED OTHERWISE.
3. REFER TO INTERSECTION LAYOUTS AND SIDEWALK DETAILS FOR MORE INFORMATION.
4. ALL SAWCUT LINES LOCATED 1' FROM EXISTING LIP OF GUTTER.

0' 25' 50' HORZ
0' 2.5' 5' VERT

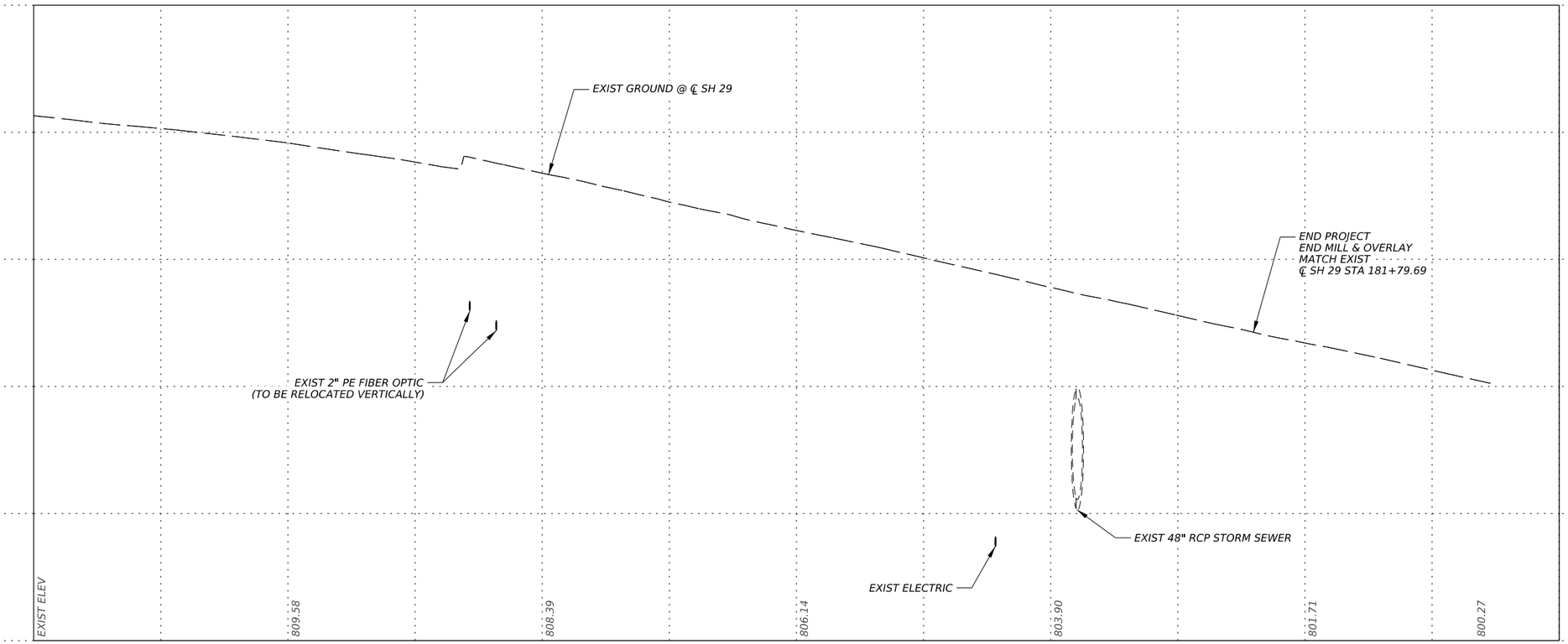

12/18/2025

STATE OF TEXAS
TYLER G. MITCHELL
139240
LICENSED
PROFESSIONAL ENGINEER

GEORGETOWN TEXAS
more than welcome

Kimley»Horn F-928

Texas Department of Transportation

SH 29

ROADWAY PLAN & PROFILE
STA 177+00 TO STA 183+00

SHEET 6 OF 7

CONT	SECT	JOB	HIGHWAY
0337	01	053	SH 29
DIST	COUNTY		SHEET NO.
AUS	WILLIAMSON		88

DATE: 12/18/2025 1:57:11 PM
FILE: pw://kh-pw.bentley.com:kh-pw-01/Documents/01 Active Projects/TX-GEO-069284005 - SH 29 Widening/4 - Design/Plan Set/3. Roadway/SH29_K_ROW_PP06

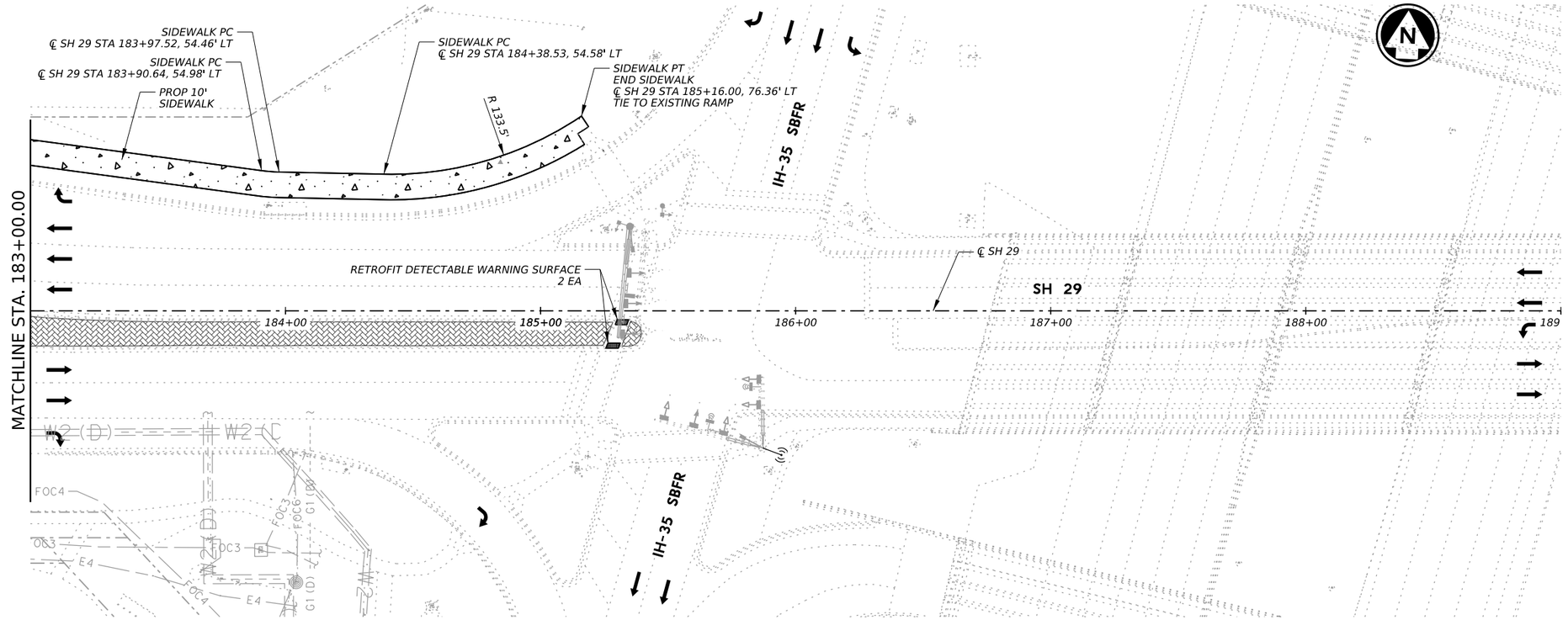

LEGEND

OH	GEOR OVERHEAD ELECTRIC
E1	GEOR UTILITY SYSTEM ELECTRIC
E2	PEC ELECTRIC
E3	PRIVATE ELECTRIC
TS1	TXDOT TRAFFIC SIGNAL
FOC1	ATT FIBER OPTIC
FOC2	FIBERLIGHT FIBER OPTIC
FOC3	FRONTIER FIBER OPTIC
FOC4	MCI FIBER OPTIC
FOC5	OPTIMUM FIBER OPTIC
W1	CITY OF GEORGETOWN WATER
W2	CITY OF ROUND ROCK WATER
G1	ATMOS GAS
WW1 (C)	CITY OF GEORGETOWN WW
WW1 (D)	CITY OF GEORGETOWN WW
	UNKNOWN
	EXIST PROPERTY LINE
	EXIST ROW
	EXIST PUBLIC UTILITY EASEMENT
	PROP ROW
	TEMP CONSTRUCTION EASEMENT
	PROP PUBLIC UTILITY EASEMENT
	SAWCUT
	PROP WIDENING
	PROP MILL & OVERLAY
	PROP CONCRETE DRIVEWAY & SUP
	PROP STAMPED CONCRETE

NOTES:

1. REFER TO DRIVEWAY PLAN AND PROFILE SHEETS FOR MORE INFORMATION.
2. DIMENSIONS AND OFFSETS ARE TO LIP OF GUTTER UNLESS NOTED OTHERWISE.
3. REFER TO INTERSECTION LAYOUTS AND SIDEWALK DETAILS FOR MORE INFORMATION.
4. ALL SAWCUT LINES LOCATED 1' FROM EXISTING LIP OF GUTTER.

0' 25' 50' HORZ
0' 2.5' 5' VERT

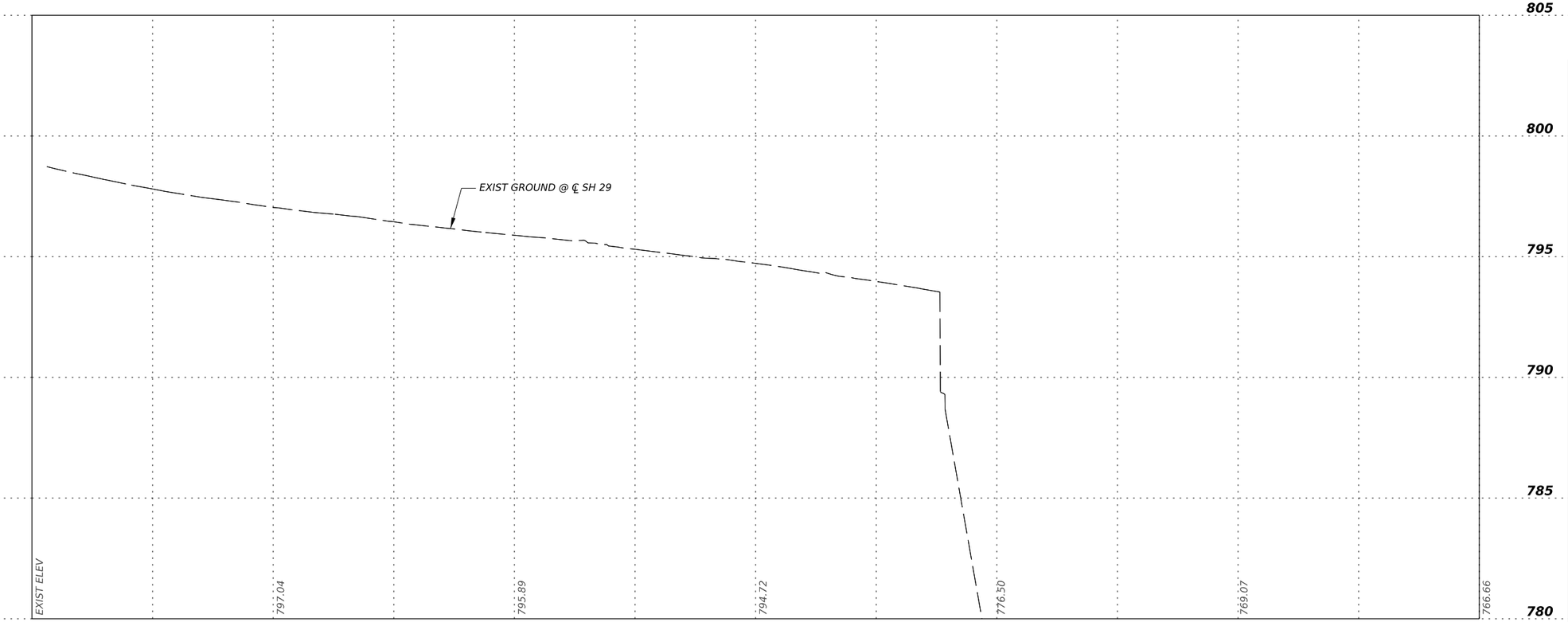

1/15/2026

STATE OF TEXAS
TYLER G. MITCHELL
139240
LICENSED
PROFESSIONAL ENGINEER

GEORGETOWN TEXAS
more than welcome

Kimley»Horn F-928

Texas Department of Transportation

SH 29

ROADWAY PLAN & PROFILE
STA 183+00 TO END

SHEET 7 OF 7

CONT	SECT	JOB	HIGHWAY
0337	01	053	SH 29
DIST		COUNTY	SHEET NO.
AUS		WILLIAMSON	89

DATE: 1/15/2026 8:42:11 AM
FILE: pw://kh-pw-01/Documents/01 Active Projects/TX-GEO-069284005 - SH 29 Widening/4 - Design/Plan Set/3. Roadway/SH29_K_RDW_PP07

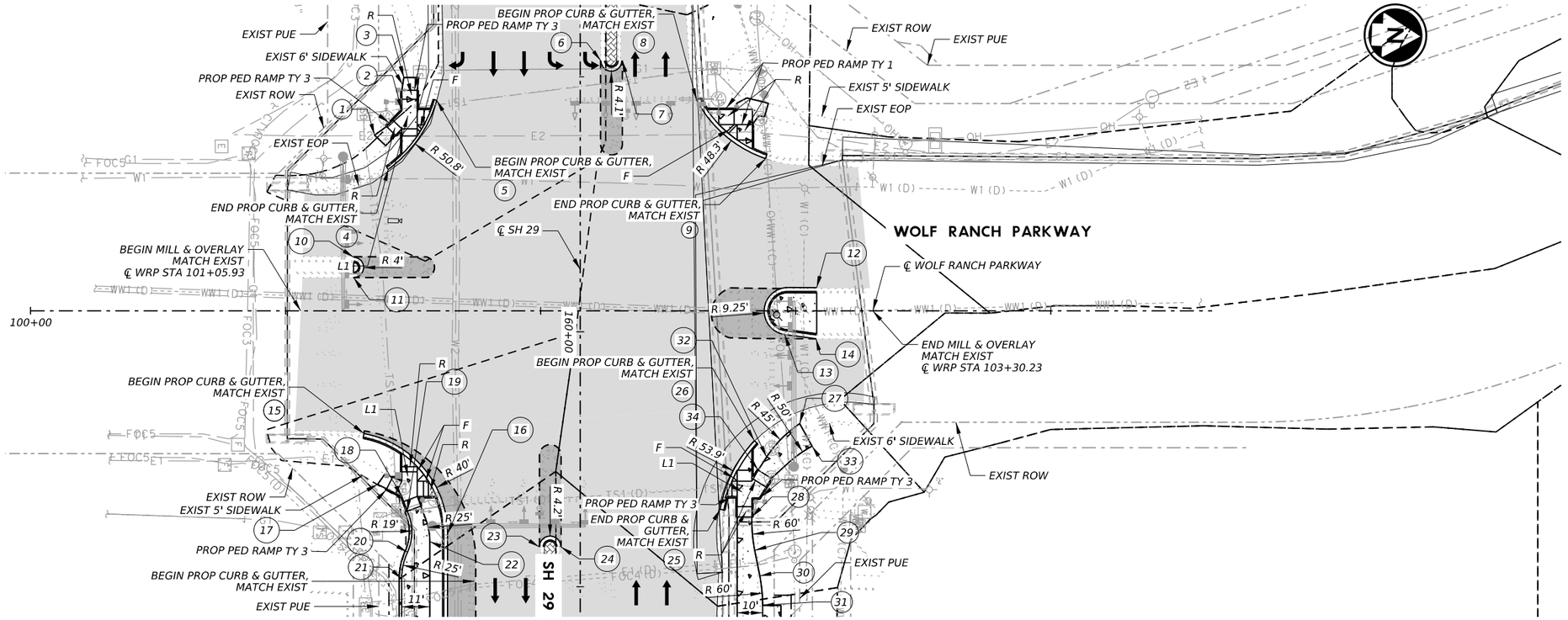

NOTES:

1. DIMENSIONS AND OFFSETS ARE TO LIP OF GUTTER UNLESS NOTED OTHERWISE.
2. ALL SAWCUT LINES LOCATED AT LIP OF GUTTER.
3. FOR PEDESTRIAN IMPROVEMENTS, R=RAMP, F=FLARE, L=LANDING, L1=SHARED LANDING.
4. SEE INTERSECTION LAYOUT POINT TABLE FOR MORE INFORMATION

0′ 25′ 50′ HORZ
0′ 2.5′ 5′ VERT

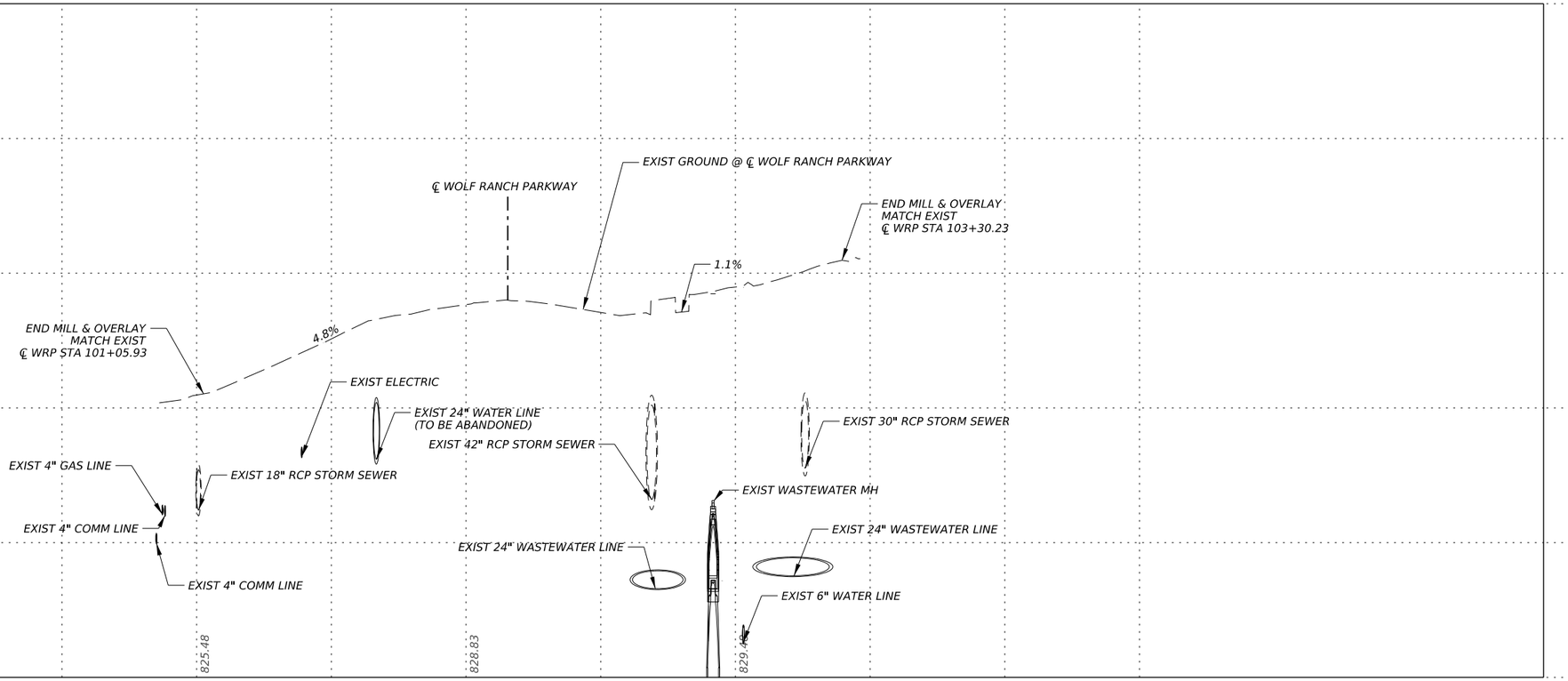

12/18/2025

STATE OF TEXAS
TYLER G. MITCHELL
139240
LICENSED
PROFESSIONAL ENGINEER

GEORGETOWN TEXAS
more than welcome

Kimley»Horn F-928

Texas Department of Transportation

SH 29

WOLF RANCH PARKWAY INTERSECTION PLAN & PROFILE

SHEET 1 OF 2

CONT	SECT	JOB	HIGHWAY
0337	01	053	SH 29
DIST	COUNTY		SHEET NO.
AUS	WILLIAMSON		90

DATE: 12/18/2025 1:57:52 PM
FILE: pw://kh-pw.bentley.com:kh-pw-01/Documents/01 Active Projects/TX-GEO-069284005 - SH 29 Widening/4 - Design/Plan Set/3. Roadway/SH29_K_ROW_INT01.dgn

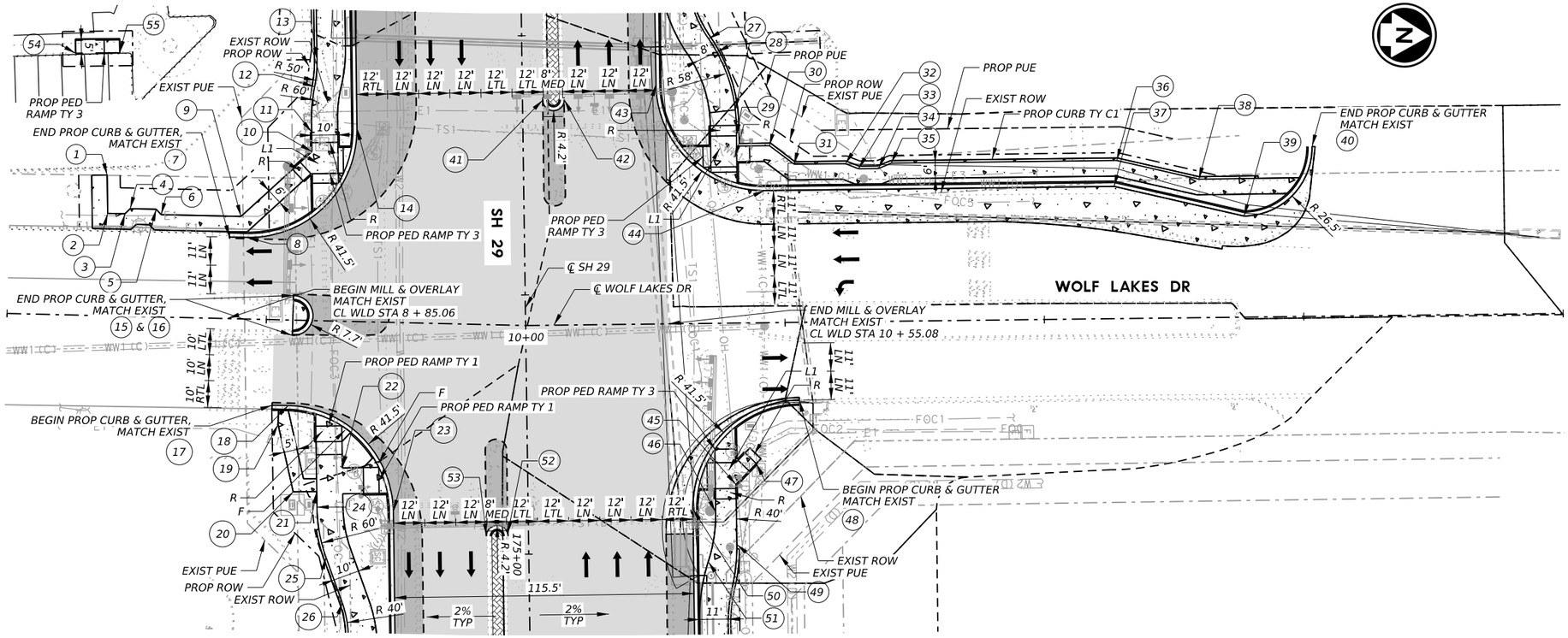

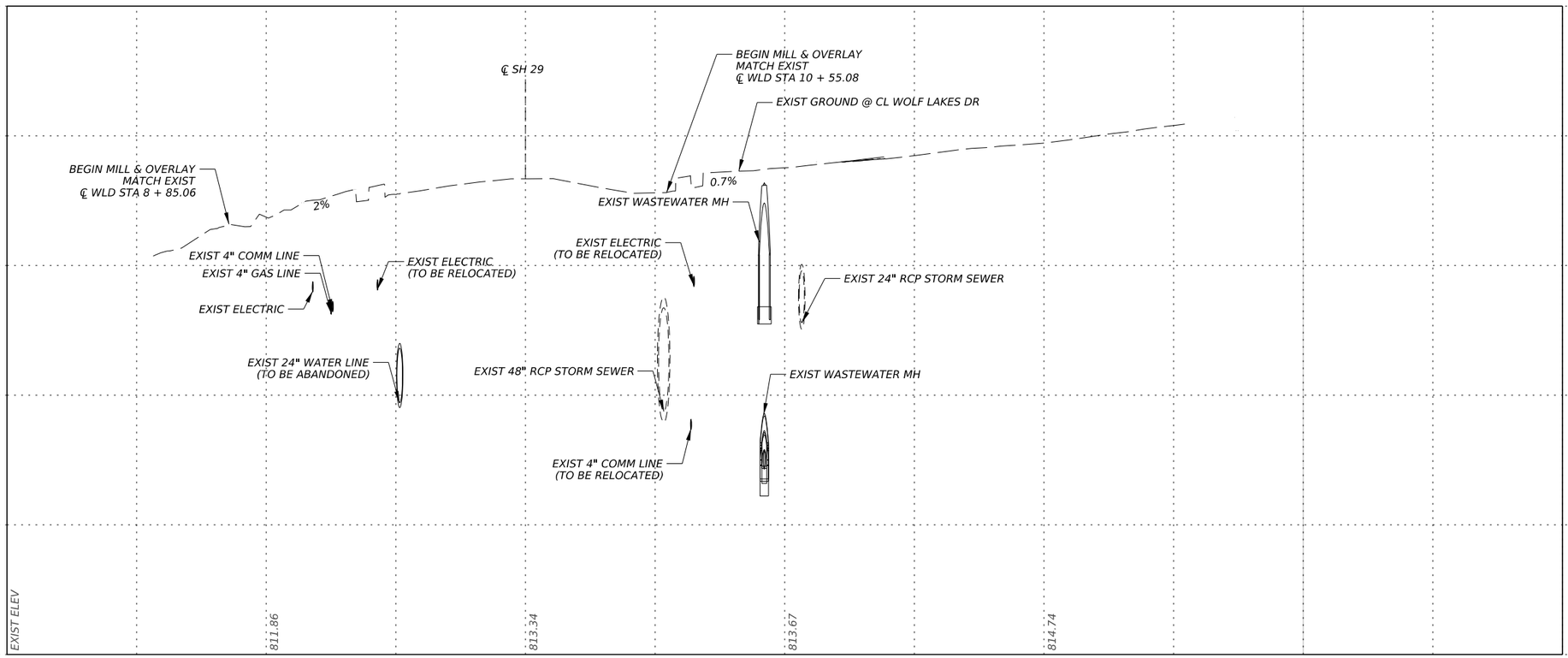

LEGEND

- OH — GEOR OVERHEAD ELECTRIC
- E1 — GEOR UTILITY SYSTEM ELECTRIC
- E2 — PEC ELECTRIC
- E3 — PRIVATE ELECTRIC
- TS1 — TXDOT TRAFFIC SIGNAL
- FOC1 — ATT FIBER OPTIC
- FOC2 — FIBERLIGHT FIBER OPTIC
- FOC3 — FRONTIER FIBER OPTIC
- FOC4 — MCI FIBER OPTIC
- FOC5 — OPTIMUM FIBER OPTIC
- W1 — CITY OF GEORGETOWN WATER
- W2 — CITY OF ROUND ROCK WATER
- G1 — ATMOS GAS
- WW1 (C) — CITY OF GEORGETOWN WW
- WW1 (D) — CITY OF GEORGETOWN WW
- UNKNOWN
- EXIST PROPERTY LINE
- EXIST ROW
- EXIST PUBLIC UTILITY EASEMENT
- PROP ROW
- TEMP CONSTRUCTION EASEMENT
- PROP PUBLIC UTILITY EASEMENT
- SAWCUT
- PROP WIDENING
- PROP MILL & OVERLAY
- PROP CONCRETE DRIVEWAY & SUP
- PROP STAMPED CONCRETE

NOTES:

1. DIMENSIONS AND OFFSETS ARE TO LIP OF GUTTER UNLESS NOTED OTHERWISE.
2. ALL SAWCUT LINES LOCATED AT LIP OF GUTTER.
3. FOR PEDESTRIAN IMPROVEMENTS, R=RAMP, F=FLARE, L=LANDING, L1=SHARED LANDING.
4. SEE INTERSECTION LAYOUT POINT TABLE FOR MORE INFORMATION

0′ 25′ 50′ HORZ
0′ 2.5′ 5′ VERT

12/18/2025

GEORGETOWN TEXAS more than welcome

Kimley»Horn F-928

Texas Department of Transportation

SH 29

WOLF LAKES DRIVE INTERSECTION PLAN & PROFILE

SHEET 2 OF 2

CONT	SECT	JOB	HIGHWAY
0337	01	053	SH 29
DIST	COUNTY		SHEET NO.
AUS	WILLIAMSON		91

DATE: 12/18/2025 1:58:14 PM
FILE: pw://kh-pw.bentley.com:kh-pw-01/Documents/01 Active Projects/TX-GEO-069284005 - SH 29 Widening/4 - Design/Plan Set/3. Roadway/SH29_K_ROW_INT02.dgn

WOLF RANCH PARKWAY			
ALIGNMENT	PT	STA	OFFSET
CL WOLF RANCH PARKWAY	1	101+34.83	68.87' LT
CL WOLF RANCH PARKWAY	2	101+45.56	78.55' LT
CL WOLF RANCH PARKWAY	3	101+46.30	91.51' LT
CL WOLF RANCH PARKWAY	4	101+40.23	55.50' LT
CL WOLF RANCH PARKWAY	5	101+59.24	82.59' LT
CL SH 29	6	158+93.68	8.09' LT
CL SH 29	7	158+93.66	16.34' LT
CL SH 29	8	159+09.10	45.62' LT
CL WOLF RANCH PARKWAY	9	102+88.11	59.70' LT
CL WOLF RANCH PARKWAY	10	101+26.64	21.00' LT
CL WOLF RANCH PARKWAY	11	101+26.59	13.08' LT
CL WOLF RANCH PARKWAY	12	103+08.20	9.11' LT
CL WOLF RANCH PARKWAY	13	102+95.62	9.28' RT
CL WOLF RANCH PARKWAY	14	103+07.89	10.92' RT
CL WOLF RANCH PARKWAY	15	101+30.70	48.10' RT
CL WOLF RANCH PARKWAY	16	101+63.49	87.44' RT
CL WOLF RANCH PARKWAY	17	101+37.07	68.04' RT
CL WOLF RANCH PARKWAY	18	101+45.58	72.82' RT
CL WOLF RANCH PARKWAY	19	101+47.71	78.53' RT
CL SH 29	20	160+86.45	67.73' RT
CL SH 29	21	160+96.87	70.00' RT
CL SH 29	22	160+82.30	59.00' RT
CL SH 29	23	160+84.38	16.04' RT
CL SH 29	24	160+84.39	7.60' RT
CL SH 29	25	160+69.66	54.84' LT
CL WOLF RANCH PARKWAY	26	102+83.73	50.88' RT
CL WOLF RANCH PARKWAY	27	103+01.54	44.27' RT
CL SH 29	28	160+72.63	67.28' RT
CL SH 29	29	160+85.72	68.40' LT
CL SH 29	30	160+95.76	70.37' LT
CL SH 29	31	161+07.33	71.50' LT
CL WOLF RANCH PARKWAY	32	102+88.55	57.37' RT
CL WOLF RANCH PARKWAY	33	103+06.36	53.04' RT
CL WOLF RANCH PARKWAY	34	102+85.25	62.47' RT

WOLF LAKES DR			
ALIGNMENT	PT	STA	OFFSET
CL WOLF LAKES DR	1	8+37.36	54.28' LT
CL WOLF LAKES DR	2	8+37.90	39.50' LT
CL WOLF LAKES DR	3	8+44.54	39.50' LT
CL WOLF LAKES DR	4	8+46.54	41.50' LT
CL WOLF LAKES DR	5	8+56.51	41.50' LT
CL WOLF LAKES DR	6	8+58.51	39.50' LT
CL WOLF LAKES DR	7	8+85.00	31.50' LT
CL WOLF LAKES DR	8	8+91.72	31.50' LT
CL WOLF LAKES DR	9	8+89.31	39.50' LT
CL SH 29	10	173+43.56	81.43' RT
CL SH 29	11	173+36.13	81.43' RT
CL SH 29	12	173+18.60	80.10' RT
CL SH 29	13	173+08.16	79.00' RT
CL SH 29	14	173+34.85	64.00' RT
CL WOLF LAKES DR	15	9+10.23	9.50' LT
CL WOLF LAKES DR	16	9+10.17	5.89' RT
CL WOLF LAKES DR	17	9+03.00	33.00' RT
CL WOLF LAKES DR	18	9+09.20	33.00' RT
CL WOLF LAKES DR	19	9+05.50	40.39' RT
CL WOLF LAKES DR	20	9+11.90	66.26' RT
CL WOLF LAKES DR	21	9+20.96	65.92' RT
CL WOLF LAKES DR	22	9+30.62	56.56' RT
CL SH 29	23	174+82.89	52.00' RT
CL SH 29	24	174+80.77	81.43' RT
CL SH 29	25	175+00.20	78.19' RT
CL SH 29	26	175+17.79	72.16' RT
CL SH 29	27	173+02.19	72.03' LT
CL SH 29	28	173+29.72	81.97' LT
CL WOLF LAKES DR	29	10+82.12	72.27' LT
CL WOLF LAKES DR	30	10+94.80	68.30' LT
CL WOLF LAKES DR	31	11+04.21	61.00' LT
CL WOLF LAKES DR	32	11+24.00	61.00' LT
CL WOLF LAKES DR	33	11+29.00	59.00' LT
CL WOLF LAKES DR	34	11+36.69	59.00' LT
CL WOLF LAKES DR	35	11+41.69	61.00 LT'
CL WOLF LAKES DR	36	12+28.62	61.00' LT
CL WOLF LAKES DR	37	12+27.43	51.00' LT
CL WOLF LAKES DR	38	12+60.17	53.43' LT
CL WOLF LAKES DR	39	12+77.46	39.00' LT
CL WOLF LAKES DR	40	13+03.96	65.55' LT
CL SH 29	41	173+24.93	7.77' LT
CL SH 29	42	173+24.96	16.07' LT
CL SH 29	43	173+19.50	51.50' LT
CL WOLF LAKES DR	44	10+92.81	51.00' LT
CL SH 29	45	174+74.26	80.27' LT
CL SH 29	46	174+84.76	72.27' LT
CL SH 29	47	174+66.27	88.19' LT
CL WOLF LAKES DR	48	11+05.15	30.00' RT
CL SH 29	49	174+97.33	80.27' LT
CL SH 29	50	174+83.53	63.50' LT
CL SH 29	51	175+03.86	69.14' LT
CL SH 29	52	174+92.96	7.90' RT
CL SH 29	53	174+92.94	16.26' RT
CL WOLF LAKES DR	54	8+24.12	100.90' LT
CL WOLF LAKES DR	55	8+41.11	101.53' LT

DW: DW: CK: CK:

DATE: 12/18/2025 1:58:35 PM
FILE: pw://kh-pw.bentley.com:kh-pw-01/Documents/01 Active Projects/TX-GEO-069284005 - SH 29 Widening/4 - Design/Plan Set/3. Roadway/SH29_K_ROW_INT03.dgn

TYLER G. MITCHELL
139240
LICENSED PROFESSIONAL ENGINEER
STATE OF TEXAS
12/18/2025

GEORGETOWN TEXAS
more than welcome

Kimley»Horn F-928

Texas Department of Transportation

SH 29

INTERSECTION LAYOUT
POINT TABLES

SHEET 1 OF 1

CONT	SECT	JOB	HIGHWAY
0337	01	053	SH 29
DIST	COUNTY		SHEET NO.
AUS	WILLIAMSON		92

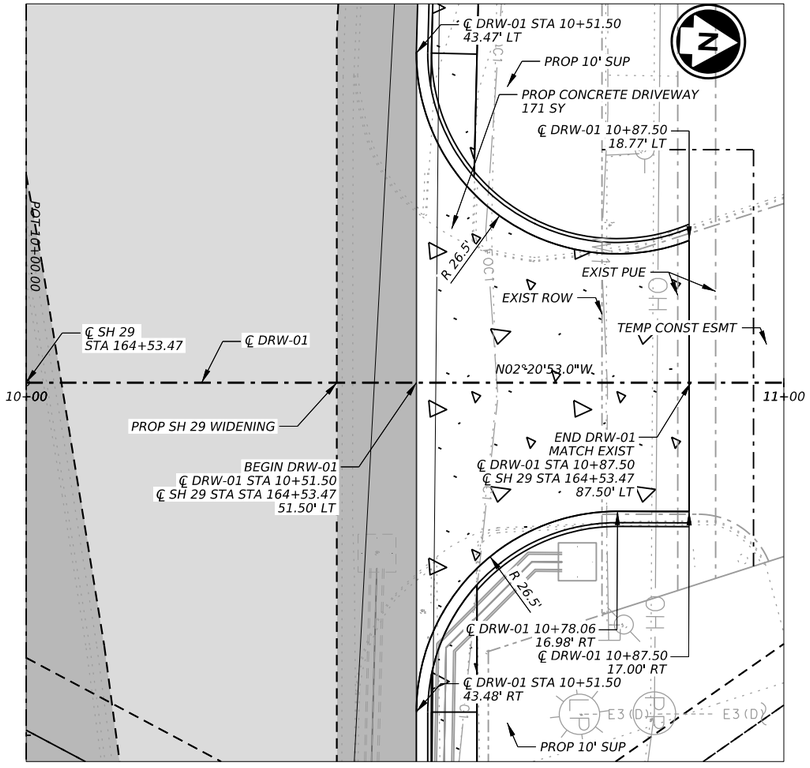

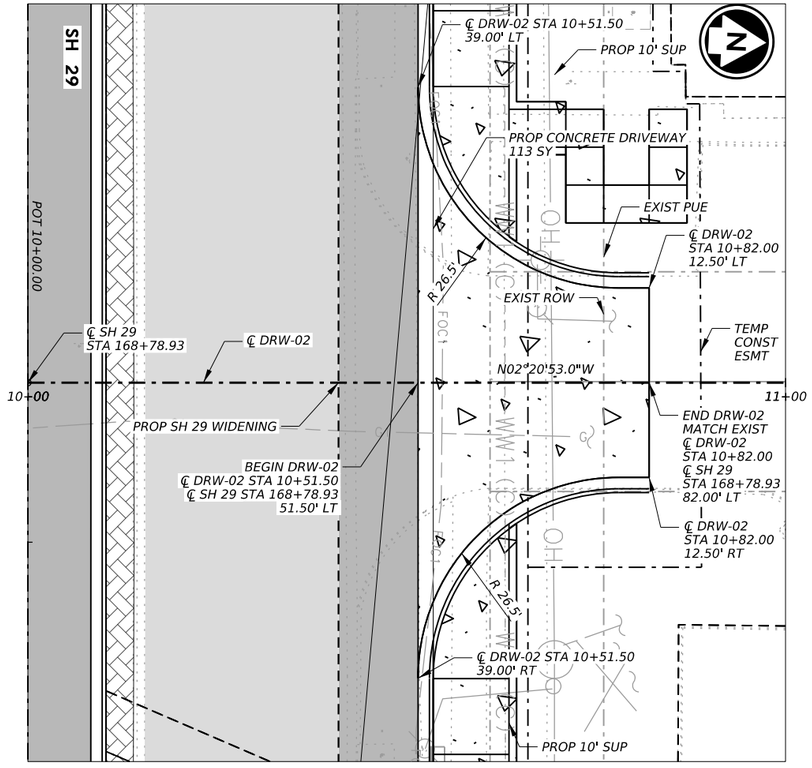

LEGEND

— OH —	GEORGETOWN UTILITY SYSTEM ELECTRIC
— E1 —	GEORGETOWN UTILITY SYSTEM ELECTRIC
— E2 —	PEC ELECTRIC
— E3 —	PRIVATE ELECTRIC
— TS1 —	TXDOT TRAFFIC SIGNAL
— FOC1 —	ATT FIBER OPTIC
— FOC2 —	FIBERLIGHT FIBER OPTIC
— FOC3 —	FRONTIER FIBER OPTIC
— FOC4 —	MCI FIBER OPTIC
— FOC5 —	OPTIMUM FIBER OPTIC
— W1 —	CITY OF GEORGETOWN WATER
— W2 —	CITY OF ROUND ROCK WATER
— G1 —	ATMOS GAS
WW1 (D)	CITY OF GEORGETOWN WASTE WATER
WW1 (C)	CITY OF GEORGETOWN WASTE WATER
	UNKNOWN
	EXIST PROPERTY LINE
	EXIST ROW
	EXIST PUBLIC UTILITY EASEMENT
	PROP ROW
	TEMPORARY CONSTRUCTION EASEMENT
	PROP PUBLIC UTILITY EASEMENT
	SAWCUT

NOTES:

1. DIMENSIONS AND OFFSETS ARE TO LIP OF GUTTER UNLESS NOTED OTHERWISE.
2. ALL SAWCUT LINES LOCATED 1' FROM LIP OF GUTTER.

0' 10' 20' HORZ
0' 1' 2' VERT

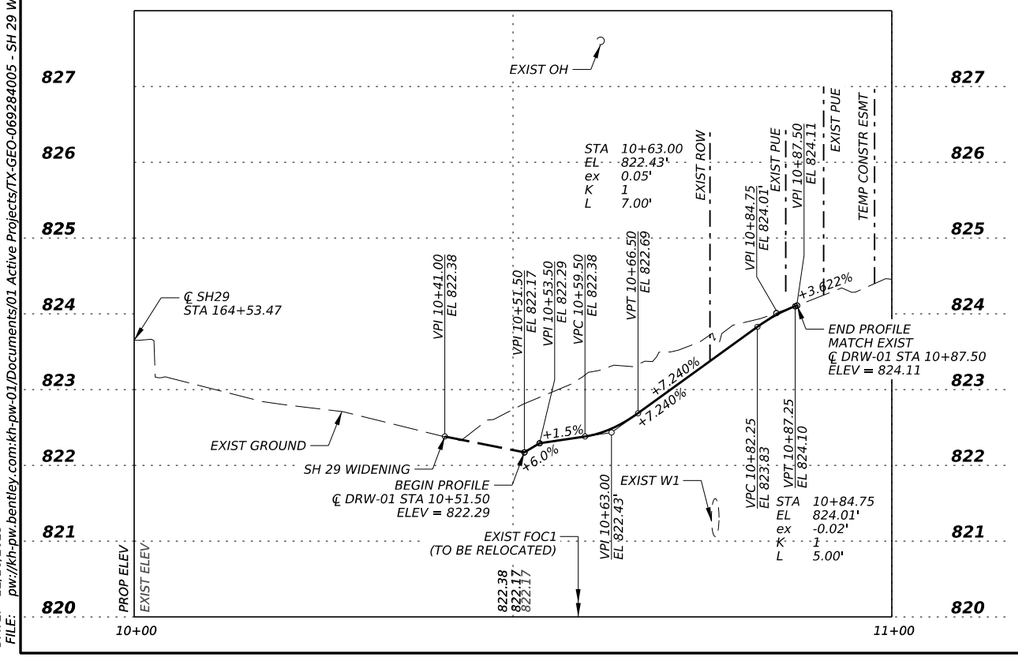

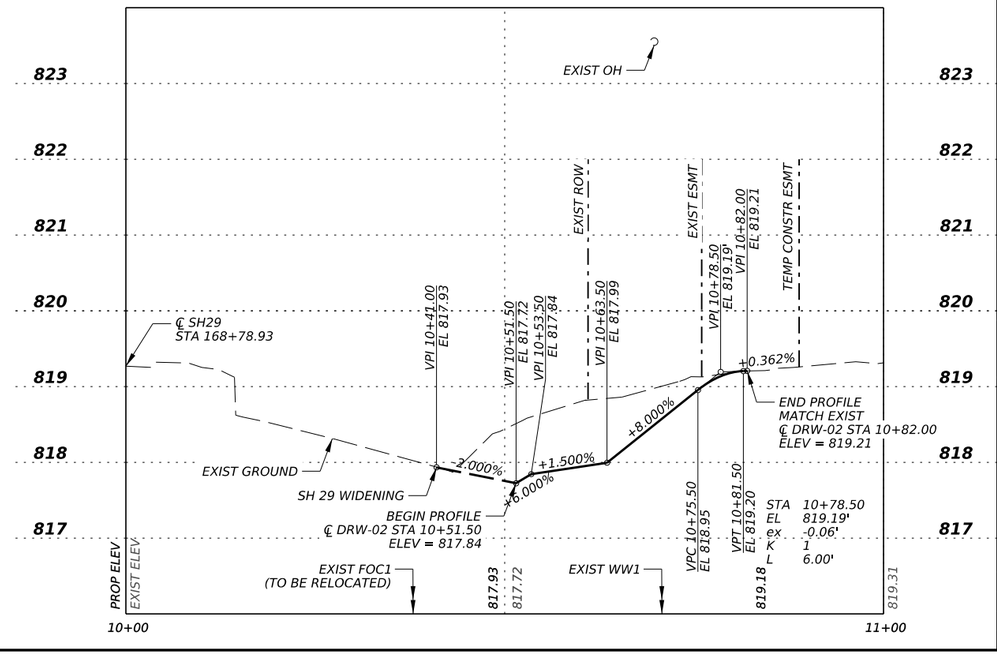

12/18/2025

GEORGETOWN TEXAS
more than welcome

Kimley»Horn F-928

Texas Department of Transportation

SH 29

DRIVEWAY PLAN & PROFILE DRW-01 & DRW-02

SHEET 1 OF 2

CONT	SECT	JOB	HIGHWAY
0337	01	053	SH 29
DIST	COUNTY		SHEET NO.
AUS	WILLIAMSON		93

DATE: 12/18/2025 1:58:59 PM
FILE: pw://kh-pw.bentley.com:kh-pw-01/Documents/01 Active Projects/TX-GEO-069284005 - SH 29 Widening/4 - Design/Plan Set/3. Roadway/SH29_K_ROW_DRW01.dgn

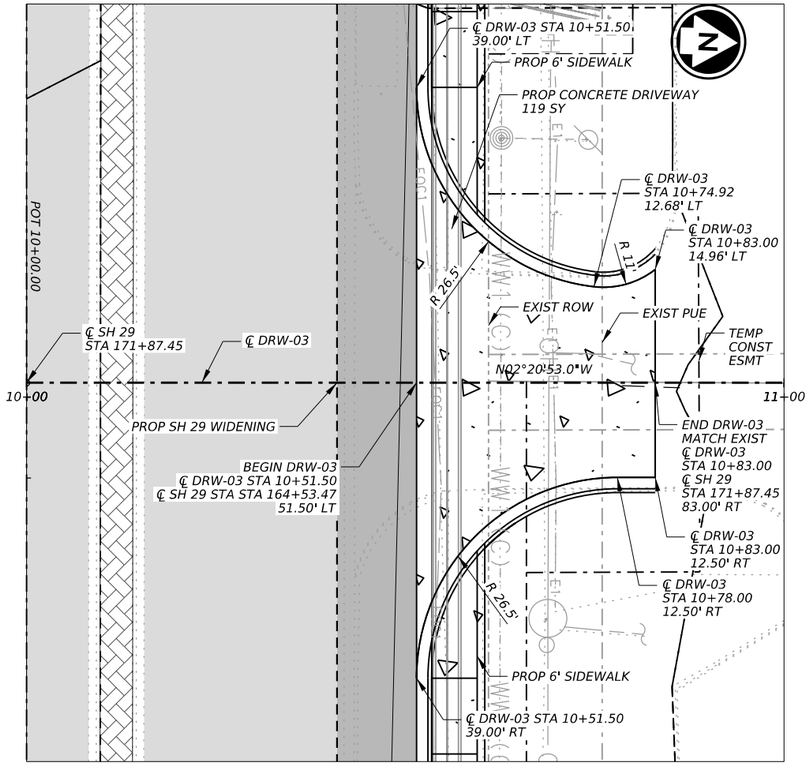

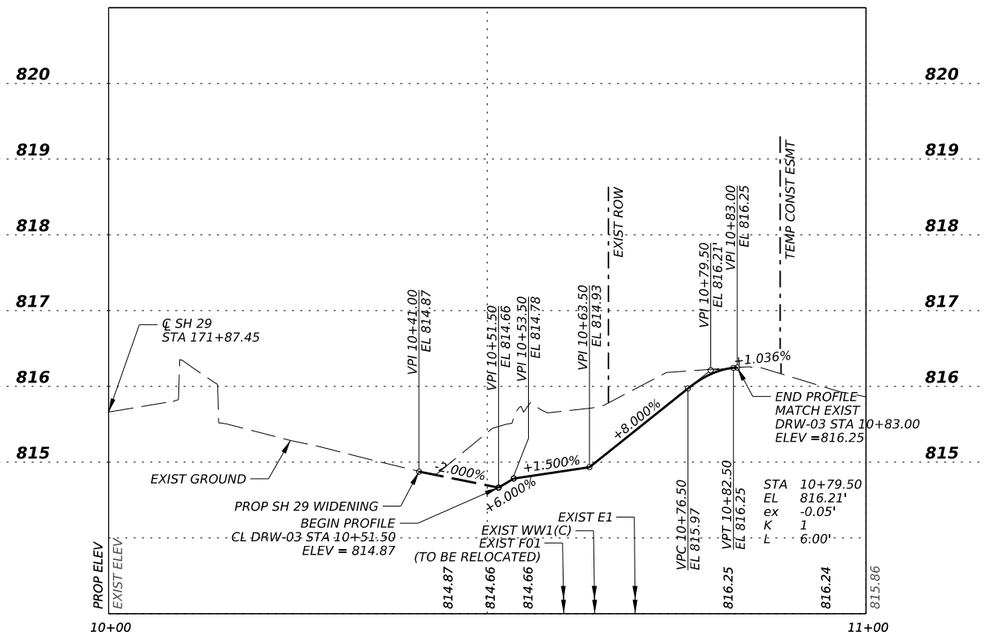

LEGEND

— OH ———	GEORGETOWN UTILITY SYSTEM ELECTRIC
· E1 ———	GEORGETOWN UTILITY SYSTEM ELECTRIC
— E2 ———	PEC ELECTRIC
— E3 ———	PRIVATE ELECTRIC
— TS1 ———	TXDOT TRAFFIC SIGNAL
— FOC1 —	ATT FIBER OPTIC
— FOC2 —	FIBERLIGHT FIBER OPTIC
— FOC3 —	FRONTIER FIBER OPTIC
— FOC4 —	MCI FIBER OPTIC
— FOC5 —	OPTIMUM FIBER OPTIC
— W1 ———	CITY OF GEORGETOWN WATER
— W2 ———	CITY OF ROUND ROCK WATER
— G1 ———	ATMOS GAS
WW1 (D)---	CITY OF GEORGETOWN WASTE WATER
WW1 (C)---	CITY OF GEORGETOWN WASTE WATER
— — —	UNKNOWN
	EXIST PROPERTY LINE
	EXIST ROW
	EXIST PUBLIC UTILITY EASEMENT
	PROP ROW
	TEMPORARY CONSTRUCTION EASEMENT
	PROP PUBLIC UTILITY EASEMENT
	SAWCUT

NOTES:

1. DIMENSIONS AND OFFSETS ARE TO LIP OF GUTTER UNLESS NOTED OTHERWISE.
2. ALL SAWCUT LINES LOCATED 1' FROM LIP OF GUTTER.

0' 10' 20' HORZ
0' 1' 2' VERT

1/21/2026

TYLER G. MITCHELL
139240
LICENSED
PROFESSIONAL ENGINEER
STATE OF TEXAS

GEORGETOWN
TEXAS
more than welcome

Kimley»Horn F-928

Texas Department of Transportation

SH 29

DRIVEWAY PLAN AND PROFILE
DRWY-03

SHEET 2 OF 2

CONT	SECT	JOB	HIGHWAY
0337	01	053	SH 29
DIST	COUNTY		SHEET NO.
AUS	WILLIAMSON		94

DATE: 1/21/2026 9:48:41 AM
FILE: pw://kh-pw.bentley.com:kh-pw-01/Documents/01 Active Projects/TX-GEO-069284005 - SH 29 Widening/4 - Design/Plan Set/3. Roadway/SH29_K_ROW_DRW03.dgn

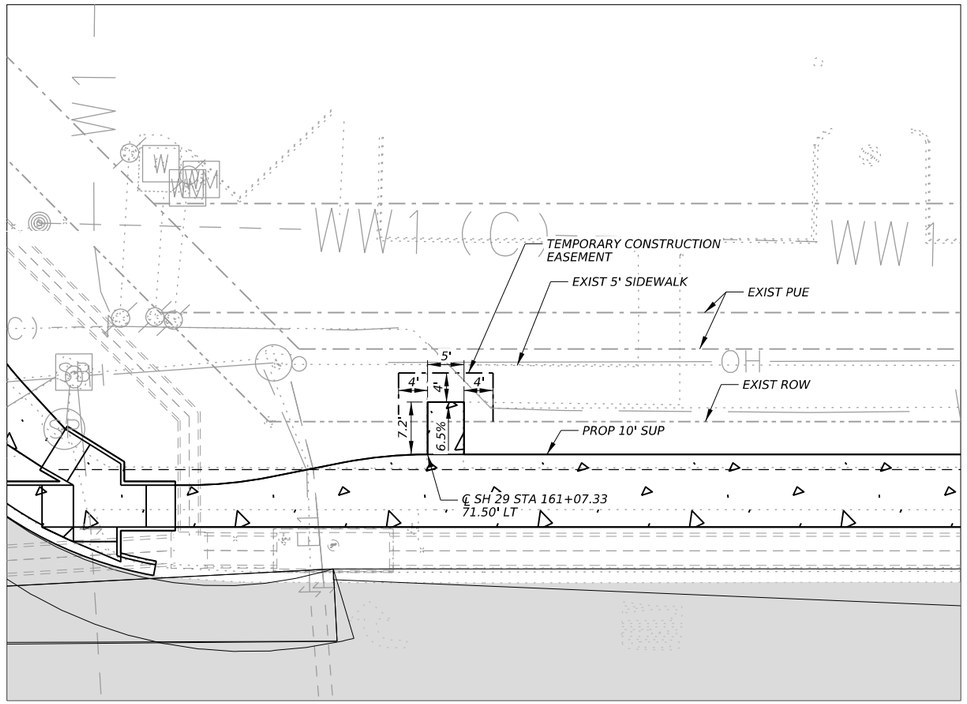

N.T.S

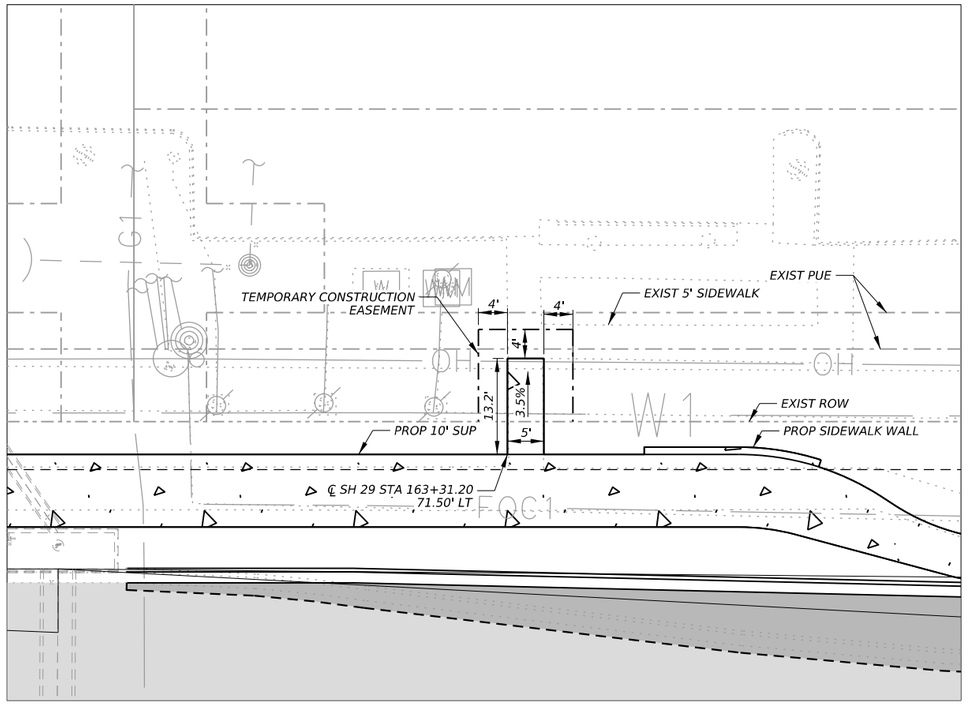

N.T.S

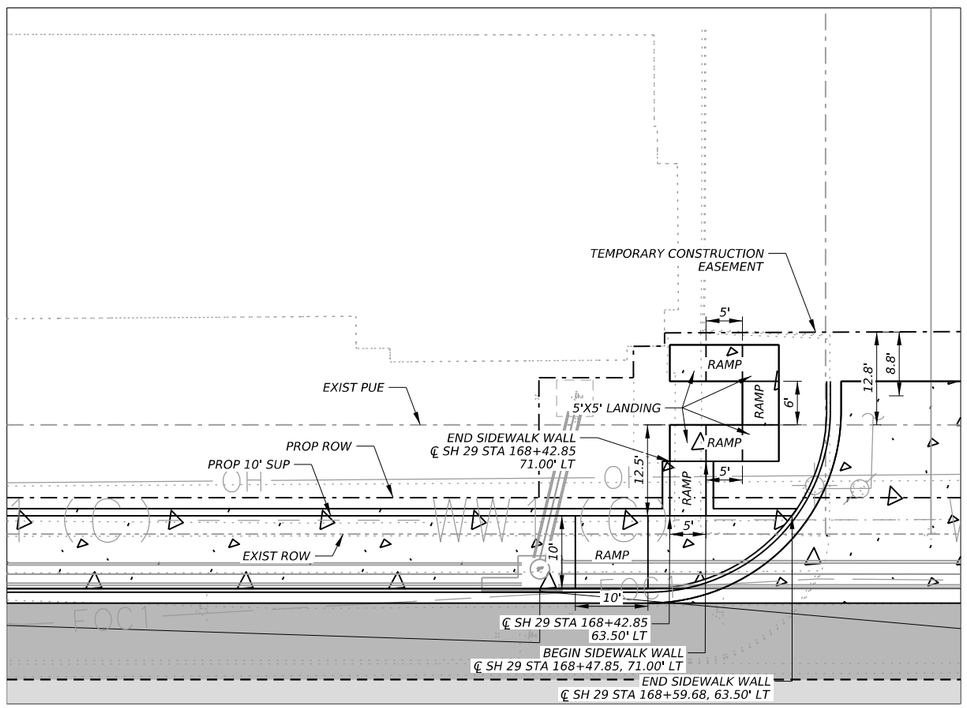

N.T.S

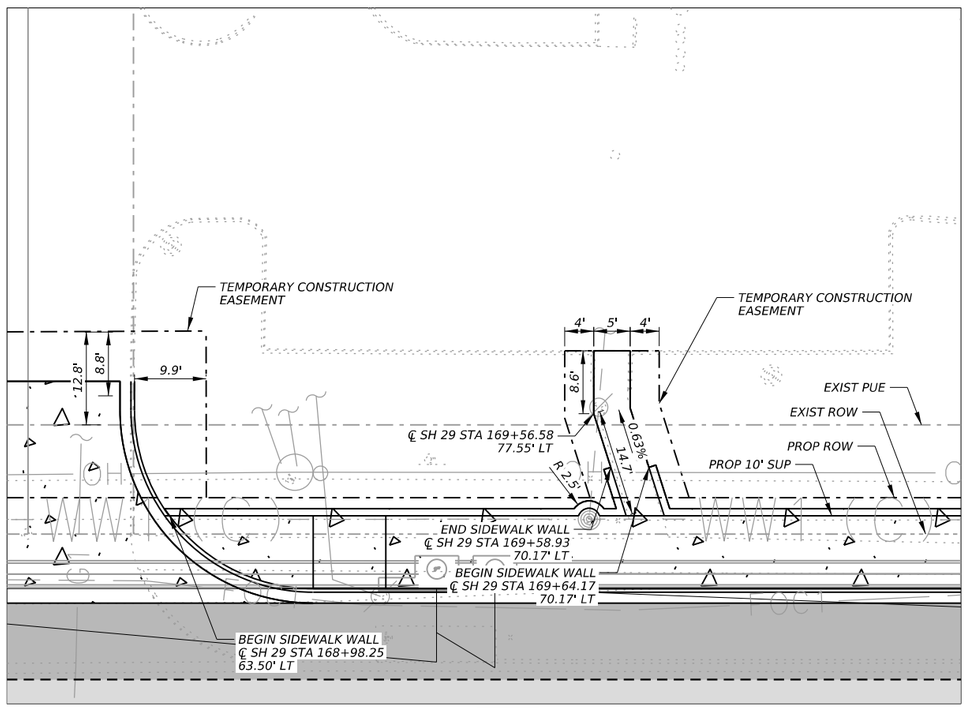

N.T.S

LEGEND

— OH —	GEORGETOWN UTILITY SYSTEM ELECTRIC
— E1 —	GEORGETOWN UTILITY SYSTEM ELECTRIC
— E2 —	PEC ELECTRIC
— E3 —	PRIVATE ELECTRIC
— TS1 —	TXDOT TRAFFIC SIGNAL
— FOC1 —	ATT FIBER OPTIC
— FOC2 —	FIBERLIGHT FIBER OPTIC
— FOC3 —	FRONTIER FIBER OPTIC
— FOC4 —	MCI FIBER OPTIC
— FOC5 —	OPTIMUM FIBER OPTIC
— W1 —	CITY OF GEORGETOWN WATER
— W2 —	CITY OF ROUND ROCK WATER
— G1 —	ATMOS GAS
WW1 (D)	CITY OF GEORGETOWN WASTE WATER
WW1 (C)	CITY OF GEORGETOWN WASTE WATER
	UNKNOWN
	EXIST PROPERTY LINE
	EXIST ROW
	EXIST PUBLIC UTILITY EASEMENT
	PROP ROW
	TEMPORARY CONSTRUCTION EASEMENT
	PROP PUBLIC UTILITY EASEMENT
	SAWCUT

NOTES:

1. MAX RAMP RUNNING SLOPE SHALL BE 8.33% WITH A MAX RUNNING LENGTH OF 15' (UNLESS OTHERWISE NOTED).
2. SEE ROADWAY PLAN AND PROFILE SHEETS FOR ADDITIONAL INFORMATION.
3. SEE MISCELLANEOUS DETAILS (SIDEWALK CONNECTION HANDRAIL DETAIL) FOR MORE INFORMATION.

12/18/2025

TYLER G. MITCHELL
139240
LICENSED PROFESSIONAL ENGINEER
STATE OF TEXAS

GEORGETOWN TEXAS
more than welcome

Kimley»Horn F-928

Texas Department of Transportation

SH 29

SIDEWALK CONNECTION DETAILS

SHEET 1 OF 4

CONT	SECT	JOB	HIGHWAY
0337	01	053	SH 29
DIST	COUNTY		SHEET NO.
AUS	WILLIAMSON		95

DATE: 12/18/2025 1:59:41 PM
FILE: pw://kh-pw.bentley.com:kh-pw-01/Documents/01 Active Projects/TX-GEO-0692840005 - SH 29 Widening/4 - Design/Plan Set/3. Roadway/SH29_K_SDW_DET01.dgn

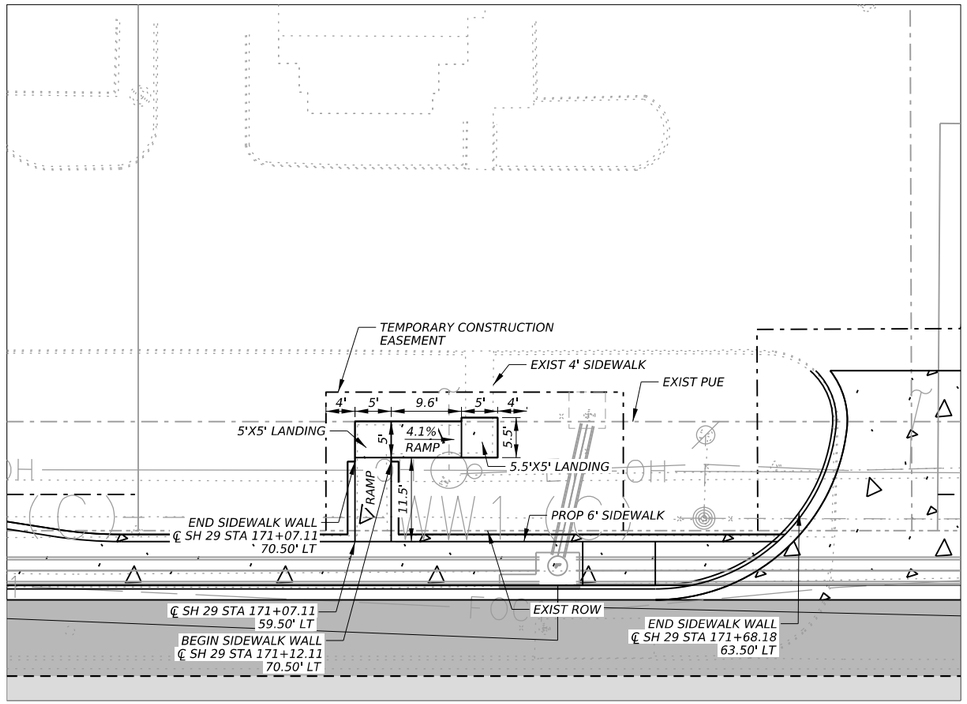

N.T.S

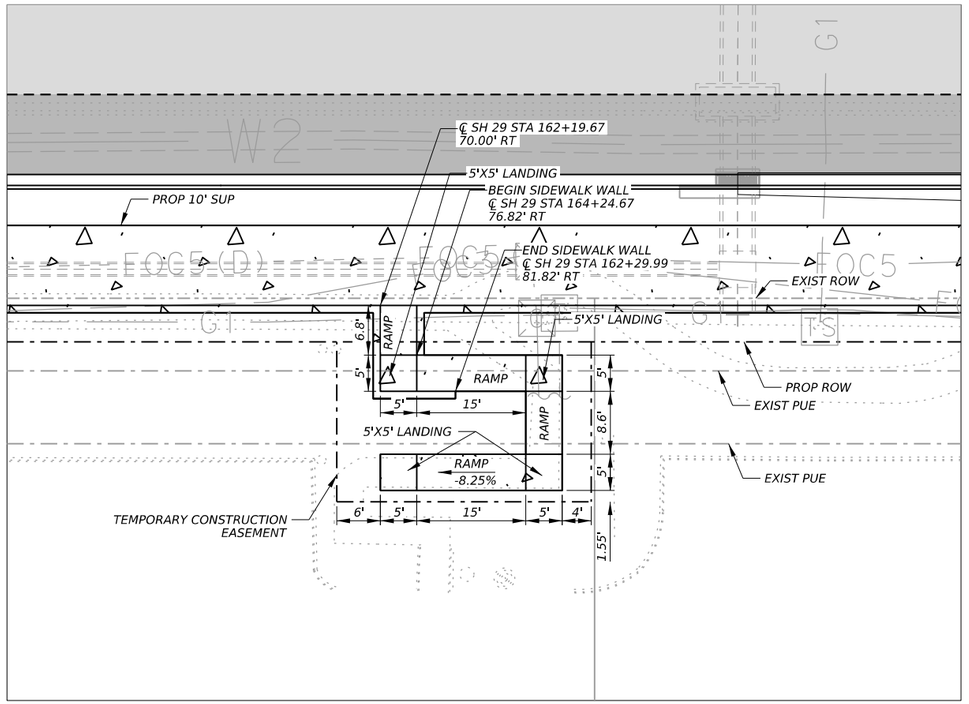

N.T.S

LEGEND

— OH —	GEORGETOWN UTILITY SYSTEM ELECTRIC
— E1 —	GEORGETOWN UTILITY SYSTEM ELECTRIC
— E2 —	PEC ELECTRIC
— E3 —	PRIVATE ELECTRIC
— TS1 —	TXDOT TRAFFIC SIGNAL
— FOC1 —	ATT FIBER OPTIC
— FOC2 —	FIBERLIGHT FIBER OPTIC
— FOC3 —	FRONTIER FIBER OPTIC
— FOC4 —	MCI FIBER OPTIC
— FOC5 —	OPTIMUM FIBER OPTIC
— W1 —	CITY OF GEORGETOWN WATER
— W2 —	CITY OF ROUND ROCK WATER
— G1 —	ATMOS GAS
WW1 (D)---	CITY OF GEORGETOWN WASTE WATER
WW1 (C)---	CITY OF GEORGETOWN WASTE WATER
— — —	UNKNOWN
	EXIST PROPERTY LINE
	EXIST ROW
	EXIST PUBLIC UTILITY EASEMENT
	PROP ROW
	TEMPORARY CONSTRUCTION EASEMENT
	PROP PUBLIC UTILITY EASEMENT
	SAWCUT

NOTES:

1. MAX RAMP RUNNING SLOPE SHALL BE 8.33% WITH A MAX RUNNING LENGTH OF 15' (UNLESS OTHERWISE NOTED).
2. SEE ROADWAY PLAN AND PROFILE SHEETS FOR ADDITIONAL INFORMATION.
3. SEE MISCELLANEOUS DETAILS (SIDEWALK CONNECTION HANDRAIL DETAIL) FOR MORE INFORMATION.

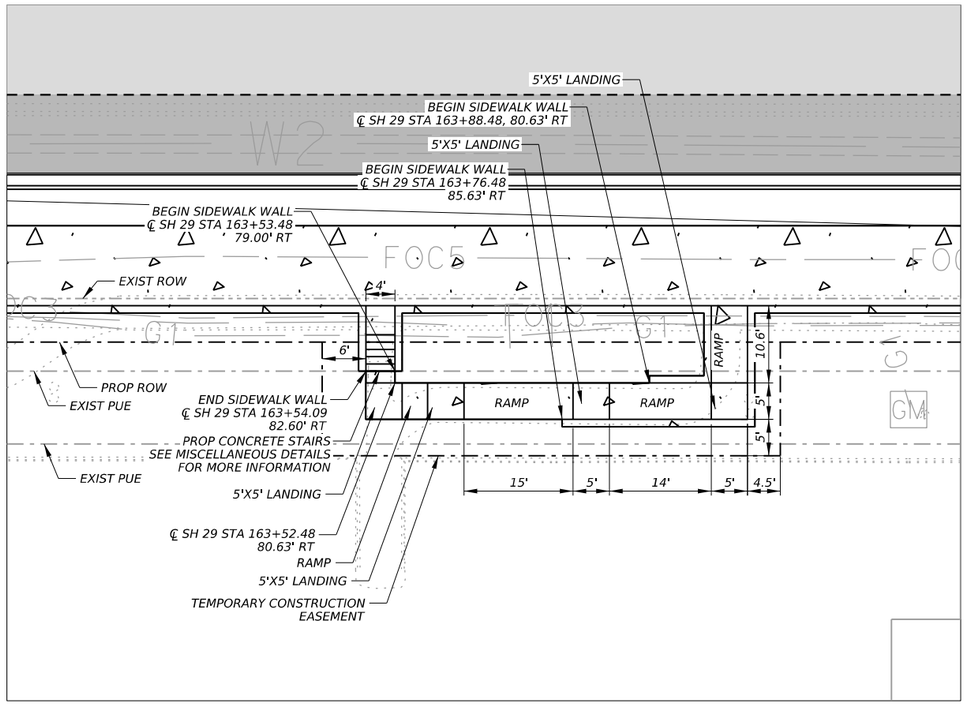

N.T.S

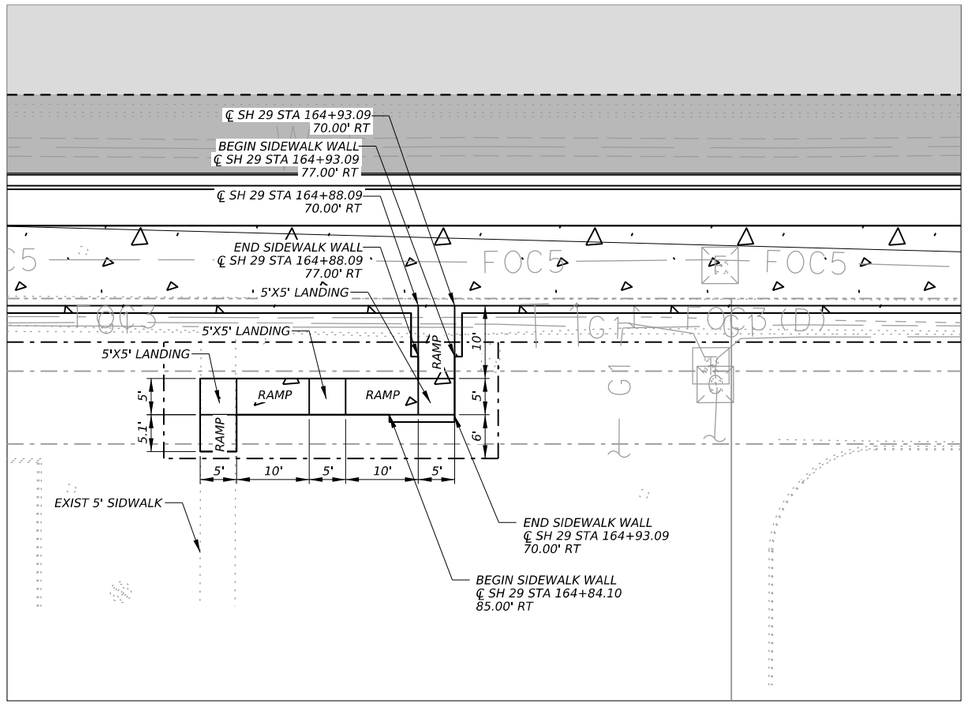

N.T.S

STATE OF TEXAS
TYLER G. MITCHELL
139240
LICENSED
PROFESSIONAL ENGINEER
1/21/2026

GEORGETOWN TEXAS
more than welcome

Kimley»Horn F-928

Texas Department of Transportation

SH 29

SIDEWALK CONNECTION DETAILS

SHEET 2 OF 4

CONT	SECT	JOB	HIGHWAY
0337	01	053	SH 29
DIST	COUNTY		SHEET NO.
AUS	WILLIAMSON		96

DATE: 1/21/2026 9:50:34 AM
FILE: pw://kh-pw.bentley.com:kh-pw-01/Documents/01 Active Projects/TX-GEO-069284005 - SH 29 Widening/4 - Design/Plan Set/3. Roadway/SH29_K_SDW_DET02.dgn

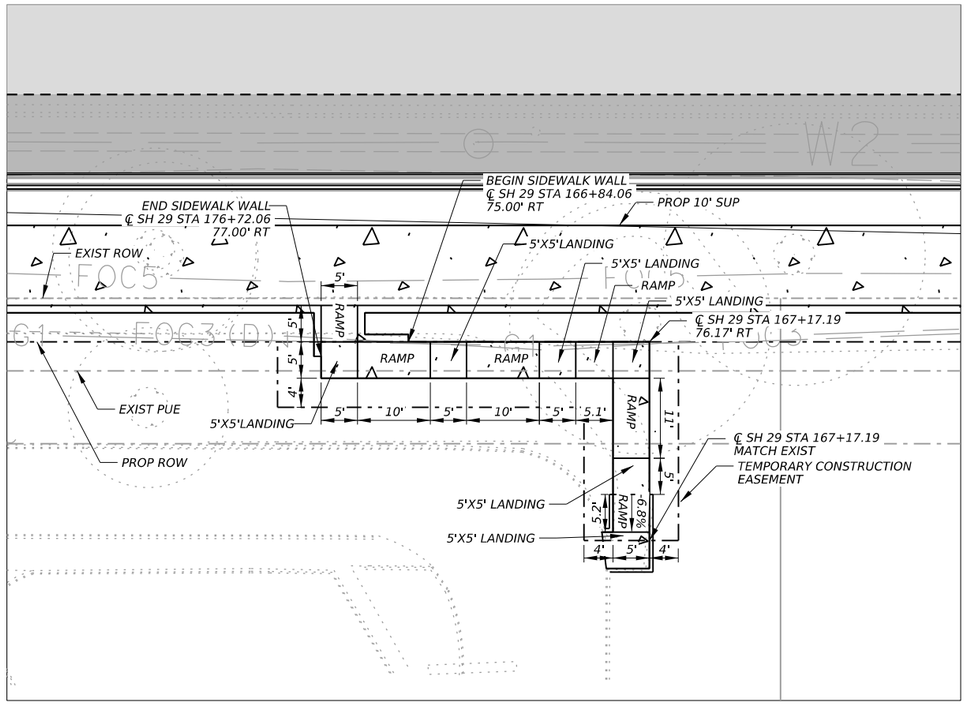

N.T.S

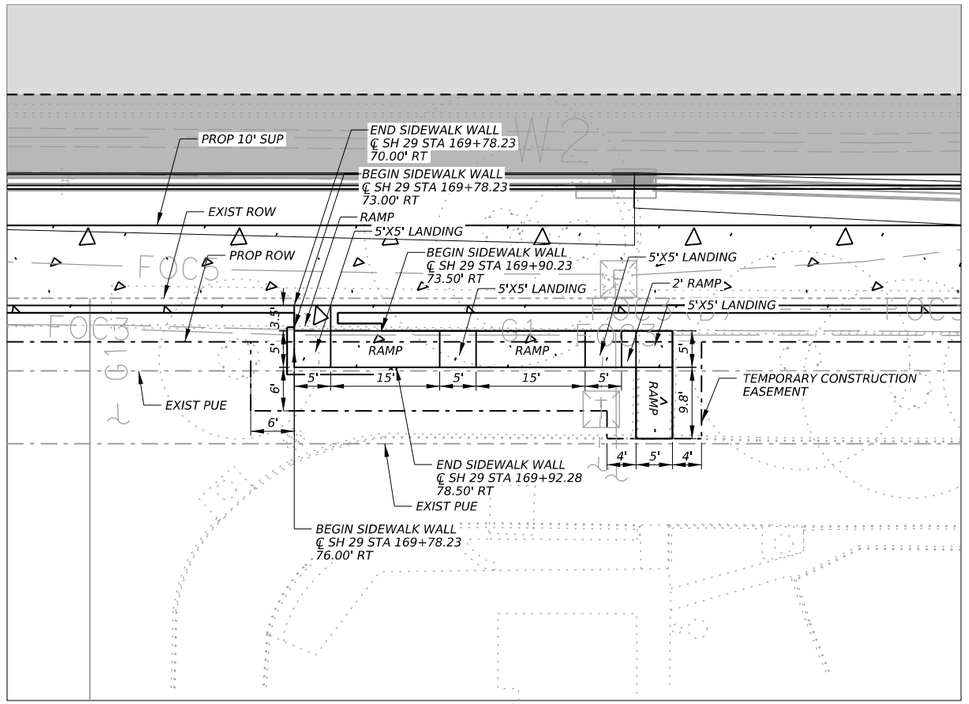

N.T.S

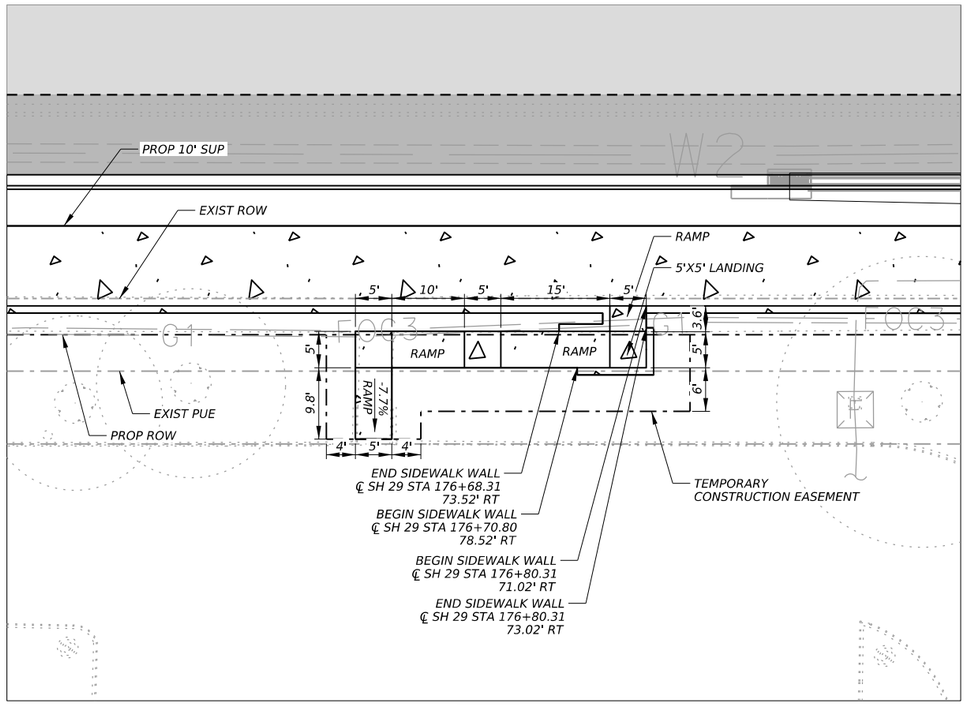

N.T.S

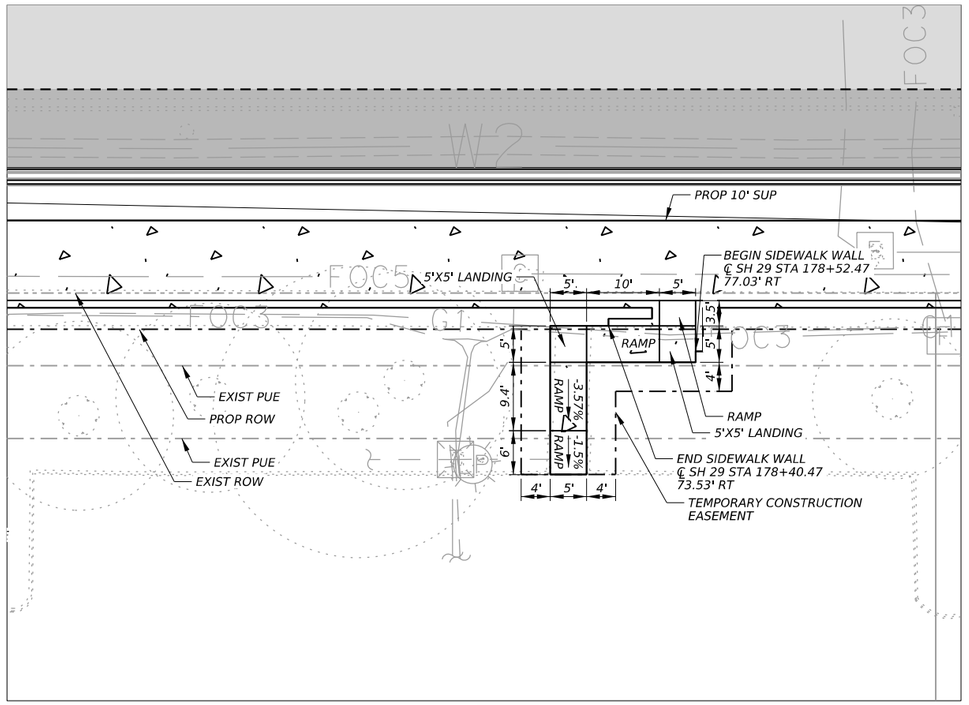

N.T.S

LEGEND

— OH —	GEORGETOWN UTILITY SYSTEM ELECTRIC
· E1 —	GEORGETOWN UTILITY SYSTEM ELECTRIC
— E2 —	PEC ELECTRIC
— E3 —	PRIVATE ELECTRIC
— TS1 —	TXDOT TRAFFIC SIGNAL
— FOC1 —	ATT FIBER OPTIC
— FOC2 —	FIBERLIGHT FIBER OPTIC
— FOC3 —	FRONTIER FIBER OPTIC
— FOC4 —	MCI FIBER OPTIC
— FOC5 —	OPTIMUM FIBER OPTIC
— W1 —	CITY OF GEORGETOWN WATER
— W2 —	CITY OF ROUND ROCK WATER
— G1 —	ATMOS GAS
WW1 (D)---	CITY OF GEORGETOWN WASTE WATER
WW1 (C)---	CITY OF GEORGETOWN WASTE WATER
— — —	UNKNOWN
	EXIST PROPERTY LINE
	EXIST ROW
	EXIST PUBLIC UTILITY EASEMENT
	PROP ROW
	TEMPORARY CONSTRUCTION EASEMENT
	PROP PUBLIC UTILITY EASEMENT
	SAWCUT

NOTES:

1. MAX RAMP RUNNING SLOPE SHALL BE 8.33% WITH A MAX RUNNING LENGTH OF 15' (UNLESS OTHERWISE NOTED).
2. SEE ROADWAY PLAN AND PROFILE SHEETS FOR ADDITIONAL INFORMATION.
3. SEE MISCELLANEOUS DETAILS (SIDEWALK CONNECTION HANDRAIL DETAIL) FOR MORE INFORMATION.

12/18/2025

GEORGETOWN TEXAS
more than welcome

Kimley»Horn F-928

Texas Department of Transportation

SH 29

SIDEWALK CONNECTION DETAILS

SHEET 3 OF 4

CONT	SECT	JOB	HIGHWAY
0337	01	053	SH 29
DIST	COUNTY		SHEET NO.
AUS	WILLIAMSON		97

DATE: 12/18/2025 2:00:24 PM
FILE: pw://kh-pw.bentley.com:kh-pw-01/Documents/01 Active Projects/TX-GEO-069284005 - SH 29 Widening/4 - Design/Plan Set/3. Roadway/SH29_K_SDW_DET03.dgn

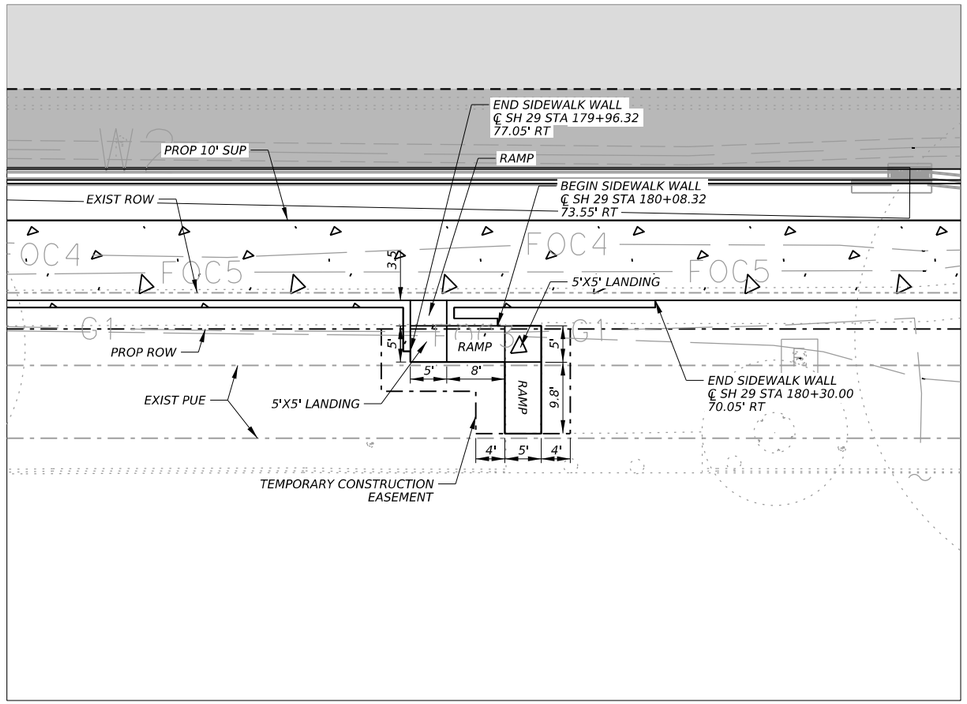

N.T.S

LEGEND

— OH —	GEORGETOWN UTILITY SYSTEM ELECTRIC
· E1 —	GEORGETOWN UTILITY SYSTEM ELECTRIC
— E2 —	PEC ELECTRIC
— E3 —	PRIVATE ELECTRIC
— TS1 —	TXDOT TRAFFIC SIGNAL
— FOC1 —	ATT FIBER OPTIC
— FOC2 —	FIBERLIGHT FIBER OPTIC
— FOC3 —	FRONTIER FIBER OPTIC
— FOC4 —	MCI FIBER OPTIC
— FOC5 —	OPTIMUM FIBER OPTIC
— W1 —	CITY OF GEORGETOWN WATER
— W2 —	CITY OF ROUND ROCK WATER
— G1 —	ATMOS GAS
WW1 (D)---	CITY OF GEORGETOWN WASTE WATER
WW1 (C)---	CITY OF GEORGETOWN WASTE WATER
— — —	UNKNOWN
	EXIST PROPERTY LINE
	EXIST ROW
	EXIST PUBLIC UTILITY EASEMENT
	PROP ROW
	TEMPORARY CONSTRUCTION EASEMENT
	PROP PUBLIC UTILITY EASEMENT
	SAWCUT

NOTES:

1. MAX RAMP RUNNING SLOPE SHALL BE 8.33% WITH A MAX RUNNING LENGTH OF 15' (UNLESS OTHERWISE NOTED).
2. SEE ROADWAY PLAN AND PROFILE SHEETS FOR ADDITIONAL INFORMATION.
3. SEE MISCELLANEOUS DETAILS (SIDEWALK CONNECTION HANDRAIL DETAIL) FOR MORE INFORMATION.

Tyler G. Mitchell
12/18/2025

STATE OF TEXAS
TYLER G. MITCHELL
139240
LICENSED
PROFESSIONAL ENGINEER

GEORGETOWN
TEXAS
more than welcome

Kimley»Horn
F-928

Texas Department of Transportation

SH 29

SIDEWALK CONNECTION DETAILS

SHEET 4 OF 4

CONT	SECT	JOB	HIGHWAY
0337	01	053	SH 29
DIST	COUNTY		SHEET NO.
AUS	WILLIAMSON		98

DATE: 12/18/2025 2:00:46 PM
FILE: pw://kh-pw.bentley.com:kh-pw-01/Documents/01 Active Projects/TX-GEO-069284005 - SH 29 Widening/4 - Design/Plan Set/3. Roadway/SH29_K_SDW_DET04.dgn

CONCRETE STEPS

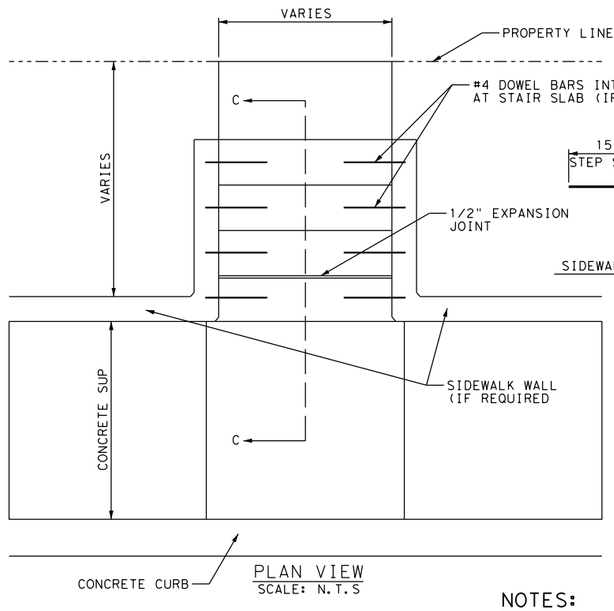

PLAN VIEW
SCALE: N.T.S

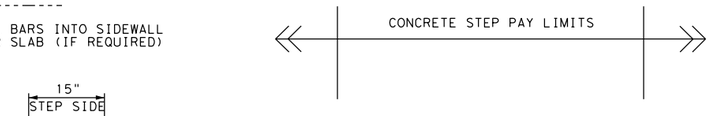

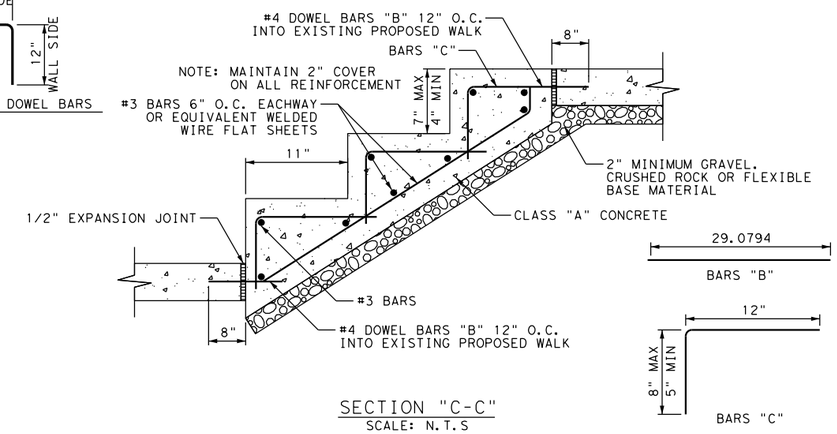

SECTION "C-C"
SCALE: N.T.S

NOTES:

1. SEE SIDEWALK CONNECTION DETAILS FOR SIDEWALK WALL AND STAIR LOCATIONS.

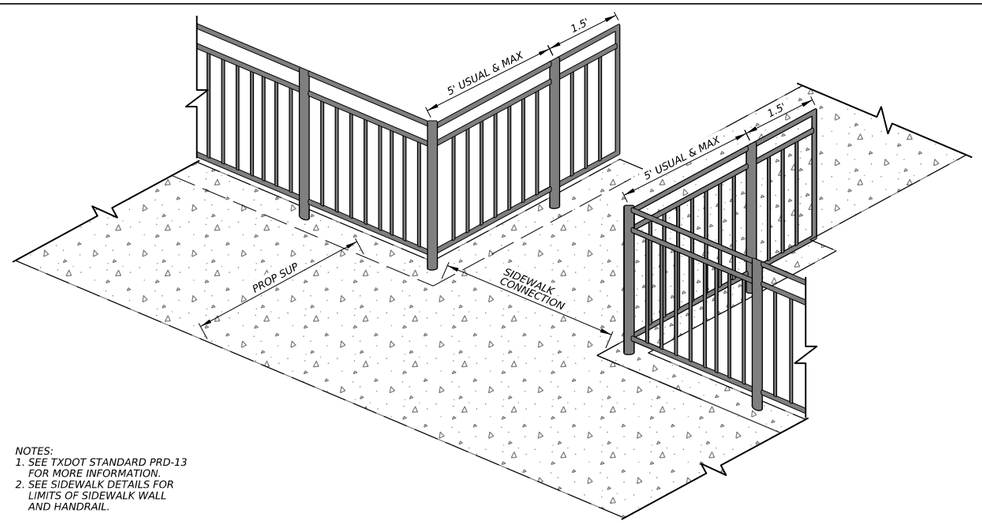

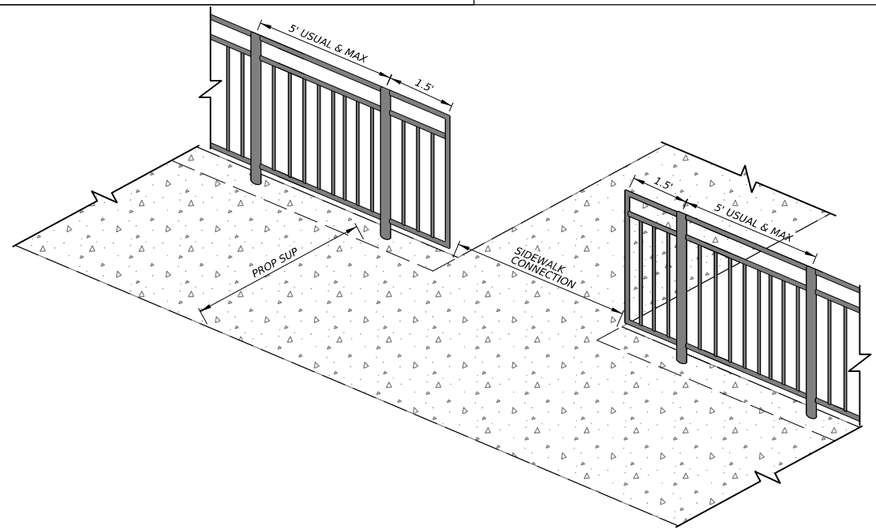

NOTES:
1. SEE TXDOT STANDARD PRD-13 FOR MORE INFORMATION.
2. SEE SIDEWALK DETAILS FOR LIMITS OF SIDEWALK WALL AND HANDRAIL.

SIDEWALK CONNECTION
HANDRAIL DETAIL

N.T.S

12/18/2025

STATE OF TEXAS
TYLER G. MITCHELL
139240
LICENSED
PROFESSIONAL ENGINEER

GEORGETOWN TEXAS
more than welcome

Kimley»Horn F-928

Texas Department of Transportation

SH 29

MISCELLANEOUS DETAILS

SHEET 1 OF 1

CONT	SECT	JOB	HIGHWAY
0337	01	053	SH 29
DIST		COUNTY	SHEET NO.
AUS		WILLIAMSON	99

DATE: 12/18/2025 2:01:08 PM
FILE: pw://kh-pw.bentley.com:kh-pw-01/Documents/01 Active Projects/TX-GEO-069284005 - SH 29 Widening/4 - Design/Plan Set/3. Roadway/SH29_K_MISC_DET01.dgn

ASSET DESCRIPTION	ROADWAY	LIMITS	
		FROM	TO
Shared Use Path/ Sidewalk	SIDEWALK ON NORTH SIDE OF SH 29	Lat: 30.633126° Lon: -97.700654°	Lat: 30.633264° Lon: -97.692308°
	SHARED USE PATH ON SOUTH SIDE OF SH 29	Lat: 30.632765° Lon: -97.700657°	Lat: 30.632844° Lon: -97.693584°
Pedestrian Ramps			
Pedestrian Rail			
Pedestrian Bridges			
Crosswalks & Signs	ALL CROSSWALKS ONLY AT WOLF RANCH PARKWAY	Lat: 30.632974° Lon: -97.700673°	Lat: 30.632990° Lon: -97.700058°
	ALL CROSSWALKS ONLY AT WOLF LAKES DR	Lat: 30.633050° Lon: -97.696105°	Lat: 30.633051° Lon: -97.695550°
Drainage Facilities			
Water Quality Ponds/ Detention Ponds	SH 29 (STORMTROOPER)	Lat: 30.633221° Lon: -97.694072°	
Traffic Signals	SH 29 AT WOLF RANCH PARKWAY	Lat: 30.632941° Lon: -97.700627°	Lat: 30.632950° Lon: -97.700106°
	SH 29 AT WOLF LAKES DR	Lat: 30.633013° Lon: -97.696105°	Lat: 30.633017° Lon: -97.695605°
	SH 29 AT IH 35	Lat: 30.633046° Lon: -97.692319°	Lat: 30.633075° Lon: -97.690459°
Illumination			
Landscaping Features			
Aesthetic/Noise Walls/ Special Features			

Note: The asset locations specified in the tables are provided in GPS grid coordinates.

The City of GEORGETOWN accepts the fixed responsibility to maintain, control, supervise, and regulate the above on State highway ROW through its corporate limits Code.

This document is per Chapter 311 of the Texas Transportation Code supplemental to the existing Municipal Maintenance Agreement (MMA) with the City of GEORGETOWN.

This document does not relieve the City of GEORGETOWN from their responsibility to maintain all roads within their city limits as stated in the MMA.

Executed on behalf of the City by: Molly K Ritter Date: 9-25-2025

Austin District Maintenance Office

Texas Department of Transportation

SH 29
ASSET MAINTENANCE

SHEET 1 OF 1

© 2024	CONT	SECT	JOB	HIGHWAY
DS: CK:	0337	01	053	SH 29
	DIST	COUNTY		SHEET NO.
DW: CK:	AUS	WILLIAMSON		100

DATE: 9/24/2025 3:38:52 PM
FILE: pw://kh-pw.bentley.com:kh-pw-01/Documents/01 Active Projects/TX-GEO-069284005 - SH 29 Widening/4 - Design/Plan Set/3. Roadway/SH29_K_ROW_ASSET_MAINT.dgn

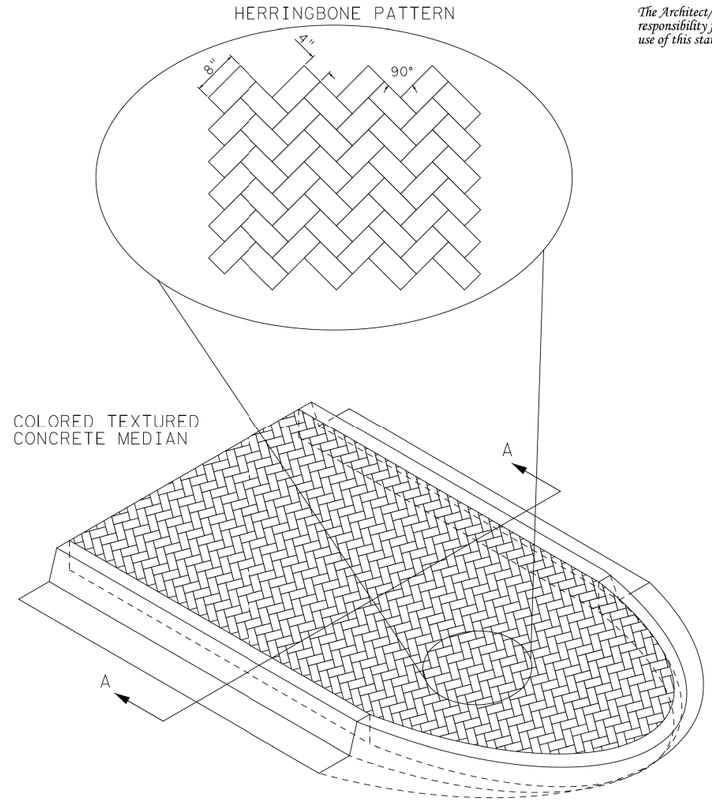

The Architect/Engineer assumes responsibility for appropriate use of this standard.

NOTES

1. USE CLASS A CONCRETE. PROVIDE COLORED WAX AS A CURING MEMBRANE MEETING THE REQUIREMENTS OF ASTM C309.
2. FOLLOW ITEM 528.3.1 FROM 2024 TXDOT STANDARD SPECIFICATIONS FOR CONSTRUCTION AND MAINTENANCE BUT USE TECHNICAL SPECS SECTION C2 - CONCRETE FOR STRUCTURES INSTEAD OF TXDOT ITEM 420 CONCRETE SUBSTRUCTURES.
3. USE FIBERS MEETING REQUIREMENTS OF DMS-4450, "FIBERS FOR CONCRETE" FROM TXDOT'S DEPARTMENTAL MATERIALS SPECIFICATION, TO REPLACE REINFORCING STEEL IN CLASS A CONCRETE.
5. PAVERS ARE 4"X8" AT 90° ANGLE.
6. USE TERRA COTTA DEEP COLOR, A SYNERGY INTEGRAL COLOR FROM THE PRISM CORPORATION.
7. FOLLOW TECHNICAL SPECS SECTION C4 - CURB AND GUTTER AND DETAIL SD- 06.
8. BEDDING MAY BE SAND, BASE, OR RAP BEDDING. FURNISH BASE MEETING THE REQUIREMENT FOR ANY TYPE OR GRADE IN ACCORDANCE WITH TECHNICAL SPECS SECTION SD4 - FLEXIBLE BASE. BASE COMPRESSIVE STRENGTHS ARE WAIVED. RAP MUST BE 100% PASSING A 1 IN. SIEVE. BEDDING MUST BE PLACED USING ORDINARY COMPACTION.

REVISION NOTE:

GEORGETOWN TEXAS

CITY OF GEORGETOWN
CONSTRUCTION STANDARDS AND DETAILS

COLORED TEXTURED CONCRETE MEDIAN PATTERN

PAGE 1 OF 1

DRAWING NAME:

SCALE:	DATE:
NTS	1/8/24
DRAWN BY:	APPROVED BY:
REC	

GEORGETOWN TEXAS
more than welcome

Kimley»Horn F-928

Texas Department of Transportation

SH 29

CITY OF GEORGETOWN
CONSTRUCTION STANDARDS
AND DETAILS

SHEET 1 OF 1

CONT	SECT	JOB	HIGHWAY
0337	01	053	SH 29
DIST		COUNTY	SHEET NO.
AUS		WILLIAMSON	101

DATE: 12/18/2025 2:01:55 PM
FILE: pw://kh-pw.bentley.com:kh-pw-01/Documents/01 Active Projects/TX-GEO-069284005 - SH 29 Widening/4 - Design/Plan Set/3. Roadway/SH29_K_MISC_DET02.dgn

DN: CK: DW: CK:

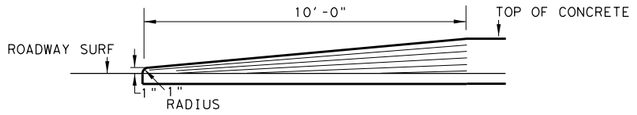

TAPER FOR CURB AND MEDIAN ENDS

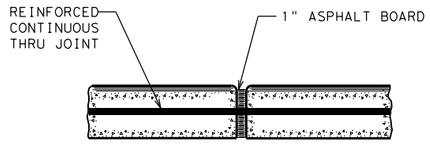

CURB, SIDEWALK, & SUP EXPANSION JOINT DETAIL

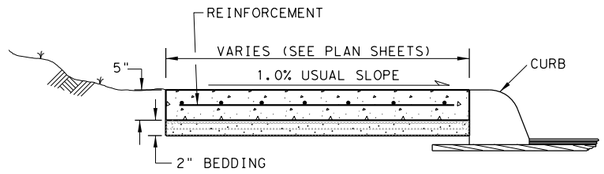

SIDEWALK & SHARED USE PATH (S.U.P.) TYP. SECT.

1. SIDEWALK OR S.U.P. EXPANSION JOINTS ARE TO BE AT A MAX. SPACING OF 40' AND COINCIDE WITH THE CURB EXPANSION JOINTS (WHEN ADJACENT TO CURB).
2. TOOLED OR SAWED CONTRACTION JOINTS ARE NOT ALLOWED

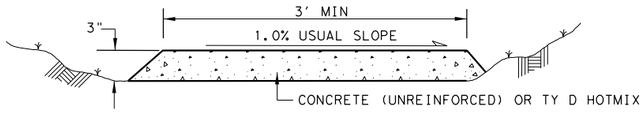

TEMPORARY SIDEWALK & SHARED USE PATH (S.U.P.)

1. EXPANSION JOINTS, BEDDING, AND TOOL JOINTS ARE NOT REQUIRED.
2. PROVIDE 5' X 5' PASSING AREA AT INTERVALS NOT TO EXCEED 200'.
3. 4' TALL ORANGE CONSTRUCTION FENCE REQUIRED IF DROP OFF GREATER THAN 6" ADJACENT TO SIDEWALK.
4. ALL MATERIAL AND TESTING REQUIREMENTS ARE WAIVED.
5. INSTALLATION, MAINTENANCE, FENCE, AND REMOVAL ARE SUBSIDIARY TO SIDEWALK ITEM.
6. EXCAVATION AND EMBANKMENT TO PROVIDE ADA COMPLIANCE WILL BE PAID USING PERTINENT BID ITEMS.
7. LOCATION AS DIRECTED BY ENGINEER.

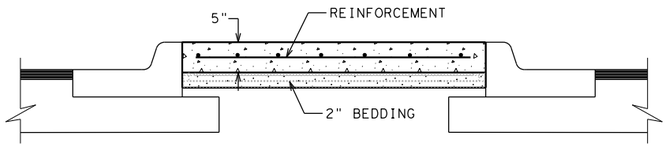

RIPRAP MEDIAN DETAIL

1. EXPANSION JOINTS ARE TO BE AT A MAX. SPACING OF 40' AND COINCIDE WITH THE CURB EXPANSION JOINTS (WHEN ADJACENT TO CURB)
2. EXPANSION MATERIAL BETWEEN MEDIAN AND CURB IS NOT REQUIRED.

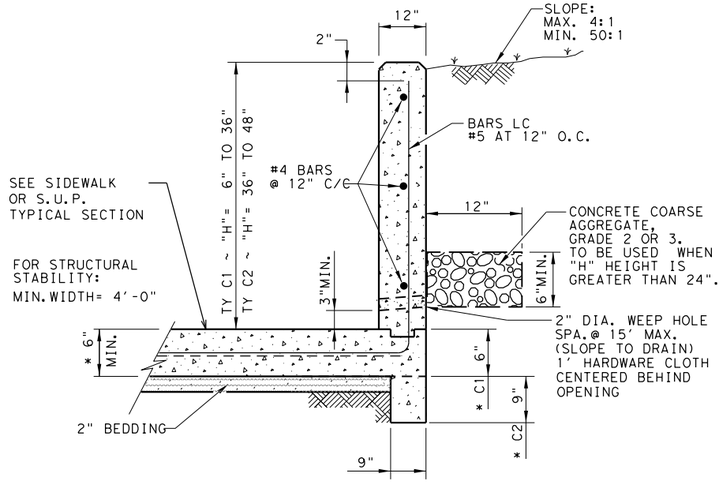

CONC CURB (TY C1) & (TY C2)

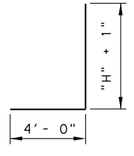

BAR LC

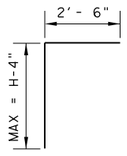

BAR LF

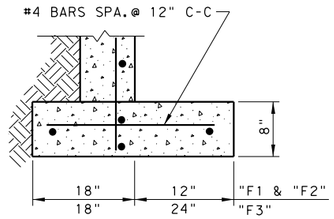

FOOTING DETAIL

SIDEWALK, SHARED USE PATH, AND MEDIAN NOTES

Reinforcement will be in accordance with Item 432.3.1. Fiber reinforcement is not allowed. Class A and B Concrete are allowed to use Coarse Aggregate Grades 1-8.

Bedding may be sand, base, or RAP bedding. Furnish base meeting the requirement for any type or grade in accordance with Item 247. Base compressive strengths are waived. RAP must be 100% passing a 1 in. sieve. Bedding must be placed using ordinary compaction.

If roots are encountered verify with the Engineer prior to accommodating or removing 2 in. diameter or larger roots. Root removal must be in accordance with Item 752.4.2. Roots may remain in the bedding or base. For improvements within 6 in. of a root, the concrete thickness may be reduced by 1 in. and the bedding increased by 1 in. to minimize impacts to the roots. Adjust bedding and surface profile to provide a 1 in. bedding cushion around the roots. The surface profile may be adjusted to the extent allowed by ADA. This work is subsidiary.

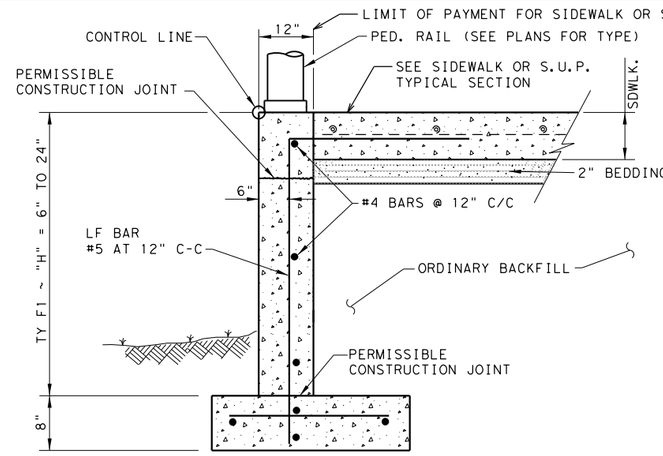

CONC CURB (TY F1)‡

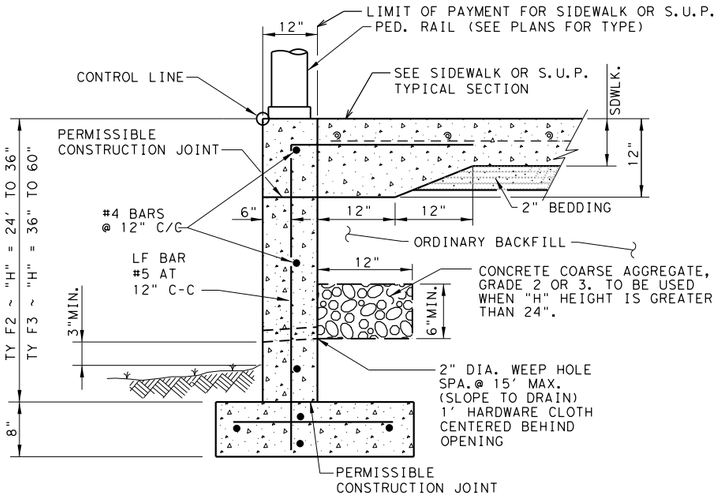

CONC CURB (TY F2) & (TY F3)‡

CONCRETE CURB NOTES:
All Concrete, including adjacent sidewalk or S.U.P., shall be Class "C".
All Reinforcing Steel shall be Grade 60.
Minimum 4' sidewalk width for CONC CURB (TYPES C1 & C2).

‡ Until the sidewalk is complete, lateral support for the "F" curbs will be required.

ALL WORK SHOWN BEYOND TYPICAL SIDEWALK, S.U.P., AND PED RAIL IS SUBSIDIARY.

DESIGN SOIL PARAMETERS:
Soil Unit Wt. = 120 pcf
Phi = 30 Degrees
Cohesion = 50 psf
Min. PI = 15
Max. PI = 30
SURCHARGE:
TYPE F CURB q = 2' Adjacent to sidewalk
Max. slope behind TYPE C Curb = 4:1
Min. Factor of Safety against sliding is 1.5.
Designed in accordance with current AASHTO Standards and Interim Specifications.

NOT TO SCALE

Texas Department of Transportation | Austin District Standard

MISCELLANEOUS CURB, PATH, SIDEWALK, AND MEDIAN DETAILS

MCPSWMD-25 (AUS)

©TxDOT 2017

REVISIONS
04/19: APPROVED
02/23: ADDED TEMP S/W
10/24: REVISED TO 2024 SPEC

CONT	SECT	JOB	HIGHWAY
0337	01	053	SH 29
DIST	COUNTY		SHEET NO.
AUS	WILLIAMSON		102

DATE: 1/5/2026 9:31:41 AM
FILE: pw://kh-pw.bentley.com:kh-pw-01/Documents/01 Active Projects/TX-CEO-069284005 - SH 29 Widening/4 - Design/Plan Set/3. Roadway/STANDARDS/mcpswmd-23.dgn

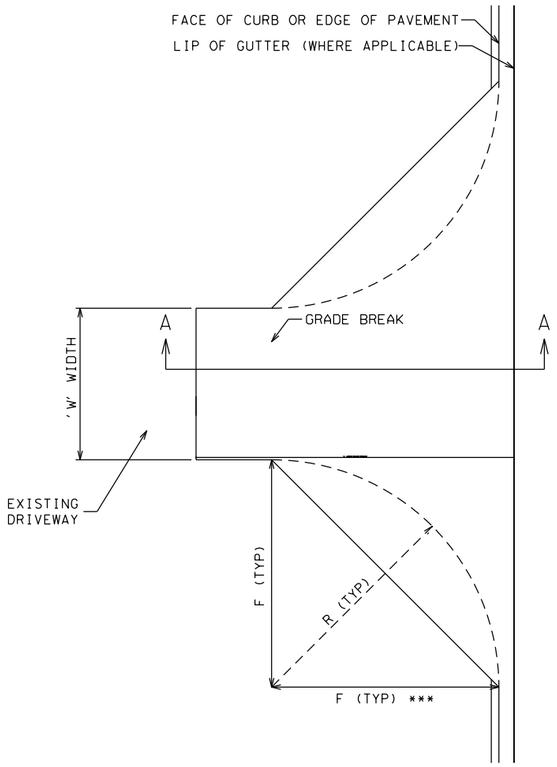

DRIVEWAY PLAN

FLARE OR RADIUS	FARM/RANCH	RESIDENTIAL	COMMERCIAL
"F" OR "R" (FT)	25	25	25

THESE ARE STANDARD DIMENSIONS UNLESS OTHERWISE SHOWN ELSEWHERE ON THE PLANS.

FLARES ARE TYPICALLY USED FOR SUBURBAN/URBAN (CURBED) ROADWAYS. RADII ARE TYPICALLY USED FOR RURAL OR UNCURBED ROADWAYS.

*** THIS 'F' DIMENSION MAY BE REDUCED TO KEEP WORK WITHIN THE ROW.

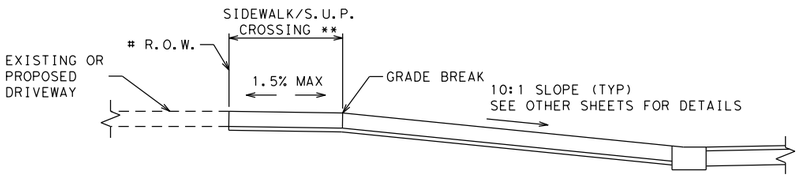

ACTUAL TIE-IN SHOWN ELSEWHERE IN PLANS OR AS DIRECTED

DRIVEWAY WITH GUTTER SECTION A-A

ENSURE GRADE BREAK DOES NOT EXCEED 8% UNLESS OTHERWISE DIRECTED. PROVIDE ABSOLUTE MINIMUM SIDEWALK CROSSING WIDTH OF 4' FOR DRIVEWAYS WIDTH OF 20' OR LESS

** LOCATE SIDEWALK CROSSING TO ALIGN WITH ADJACENT SIDEWALK; SIDEWALK/S.U.P. WIDTH AND LOCATION SHOWN ELSEWHERE ON THE PLANS.

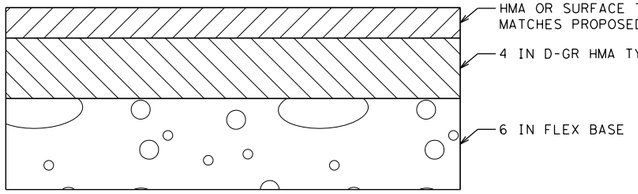

HMA OR SURFACE TREATEMENT - COMMERCIAL

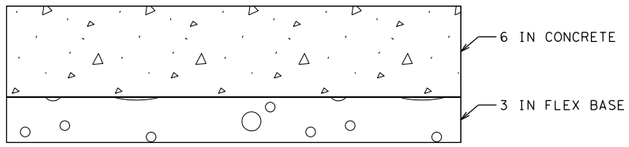

CONCRETE - ALL DRIVEWAY TYPES

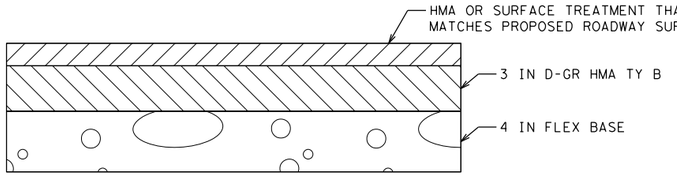

HMA OR SURFACE TREATMENT - FARM/RANCH/RESIDENTIAL

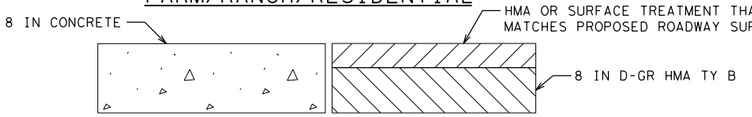

FAST TRACK ACP (TYPE 3) OR CONCRETE

DRIVEWAY AND TURNOUT TYPICAL SECTIONS

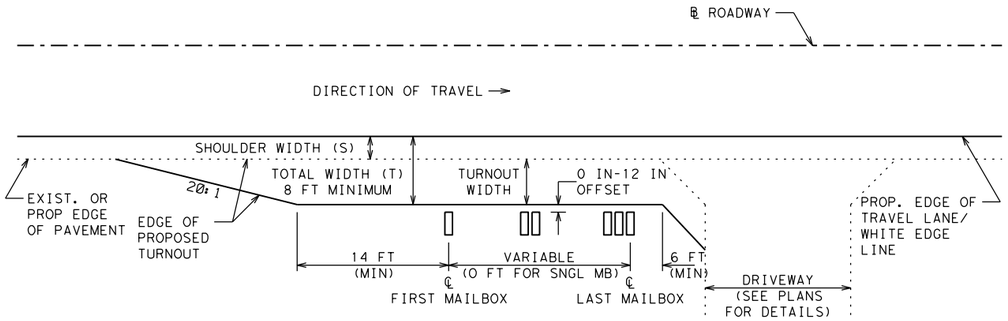

MAILBOX TURNOUT PLAN WITH DRIVEWAY

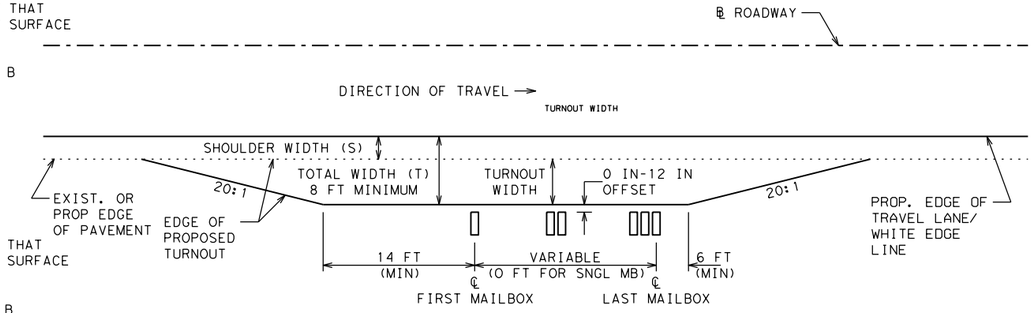

MAILBOX TURNOUT PLAN WITHOUT DRIVEWAY

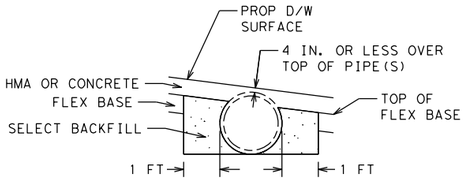

THIN PIPE COVER DRIVEWAY

*FOR USE WHEN TOP OF PIPE(S) TO D/W SURFACE IS 4 IN. OR LESS
**ONLY ONE PIPE SHOWN FOR CLARITY
***SELECT BACKFILL MUST BE FLOWABLE FILL, CEMENT TREATED BASE, OR ANY CLASS OF CONCRETE AS DIRECTEDBY THE ENGINEER. TO BE PAID USING EXISTING BID ITEMS.

GENERAL NOTES

PROVIDE EXPANSION 20 FT C-C FOR WIDTH OR LENGTH OVER 25 FT. EXPANSION JOINT PER AUS STANDARD FOR SIDEWALK (MCPSWMD).

REINFORCEMENT WILL BE IN ACCORDANCE WITH ITEM 432.3.1 USING NO. 3 OR NO. 4 BARS.

FIBER REINFORCEMENT IS NOT ALLOWED. CLASS A CONCRETE IS ALLOWED TO USE COARSE AGGREGATE GRADES 1-8.

IN LIEU OF PFC OR TOM, SURFACE MUST BE 1.5" D-GR HMA TY D. IF SURFACE IS A MULTIPLE COURSE SURFACE TREATEMENT, ALL COURSES MUST BE PLACED ON DRIVEWAY. SURFACE HMA IS PG 76-22. NON SURFACE HMA IS PG 64-22 AND MAY BE BLADE LAID.

FURNISH BASE MEETING THE REQUIREMENTS FOR ANY TYPE OR GRADE IN ACCORDANCE WITH ITEM 247. BASE COMPRESSIVE STRENGTHS ARE WAIVED.

THE BASE UNDER THE CONCRETE MAY BE REPLACED WITH CONCRETE AT A RATIO OF 3 INCHES OF BASE EQUALS 2 INCHES OF CONCRETE.

FAST TRACK DRIVEWAYS MUST BE CLOSED, CONSTRUCTED, AND REOPENED WITHIN 24 HOURS.

IF ROOTS ARE ENCOUNTERED VERIFY WITH THE ENGINEER PRIOR TO ACCOMMODATING OR REMOVING 2 IN. DIAMETER OR LARGER ROOTS. ROOT REMOVAL MUST BE IN ACCORDANCE WITH ITEM 752.4.2. ROOTS MAY REMAIN IN THE BASE. FOR IMPROVEMENTS WITHIN 6 IN. OF A ROOT, THE CONCRETE THICKNESS MAY BE REDUCED BY 1 IN. AND THE BASE INCREASED BY 1 IN. TO MINIMIZE IMPACTS TO THE ROOTS. ADJUST BASE AND SURFACE PROFILE TO PROVIDE A 1 IN. BASE CUSHION AROUND THE ROOTS. THE SURFACE PROFILE MAY BE ADJUSTED TO THE EXTENT ALLOWED BY ADA. THIS WORK IS SUBSIDIARY.

Texas Department of Transportation | Austin District Standard

DRIVEWAYS AND MAILBOX TURNOUTS

DWMB-24 (AUS)

©TxDOT 2017

REVISIONS
01/16: SHEET CREATED
04/19: APPROVED
11/20: TABLE REVISED, GN ADDED, PLAN & PROFILE MODIFIED
01/22: ADDED TURNOUT INFO
01/24: THIN PIPE DETAIL REVISED

CONT	SECT	JOB	HIGHWAY
0337	01	053	SH 29
DIST	COUNTY		SHEET NO.
AUS	WILLIAMSON		103

DATE: 12/18/2025 2:02:41 PM
FILE: pw://kh-pw.bentley.com:kh-pw-01/Documents/01 Active Projects/TX-GEO-069284005 - SH 29 Widening/4 - Design/Plan Set/3. Roadway/STANDARDS/dwmb-24.dgn

DISCLAIMER:
The use of this standard is governed by the "Texas Engineering Practice Act". No warranty of any kind is made by TxDOT for any purpose whatsoever. TxDOT assumes no responsibility for the conversion of this standard to other formats or for incorrect results or damages resulting from its use.

DATE: 12/18/2025
FILE: pw:/kh-pw.bentley.com:kh-pw-01/Documents/01 Active Projects/TX-GEO-069284005 - SH 29 Widening/4 - Design/Plan Set/3. Roadway/STANDARDS/cccg22.dgn

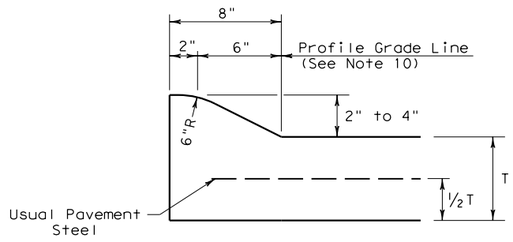

TYPE I CURB (MONOLITHIC)
2" - 4" HEIGHT

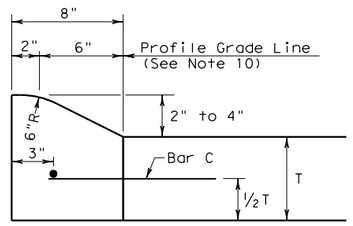

TYPE I CURB
2" - 4" HEIGHT

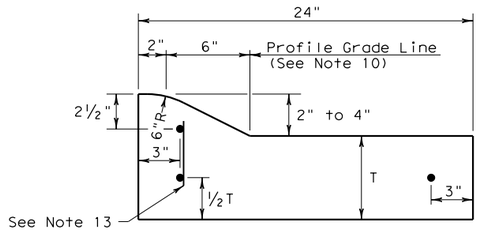

TYPE I CURB AND GUTTER
2" - 4" HEIGHT

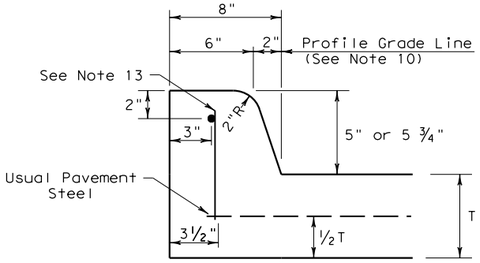

TYPE II CURB (MONOLITHIC)
5" - 5 ¾" HEIGHT

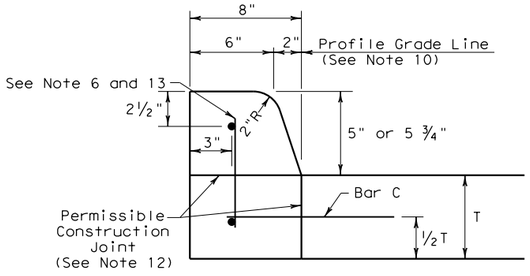

TYPE II CURB
5" - 5 ¾" HEIGHT

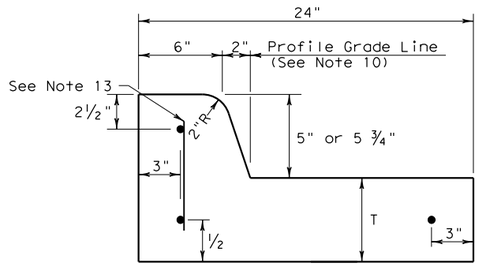

TYPE II CURB AND GUTTER
5" - 5 ¾" HEIGHT

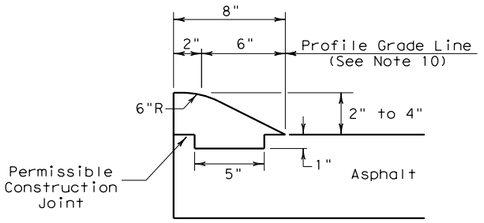

TYPE III CURB (KEYED)
2" - 4" HEIGHT

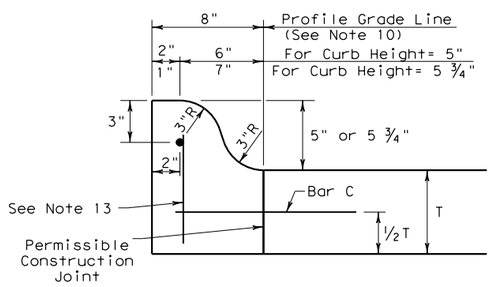

TYPE IIa CURB
5" - 5 ¾" HEIGHT

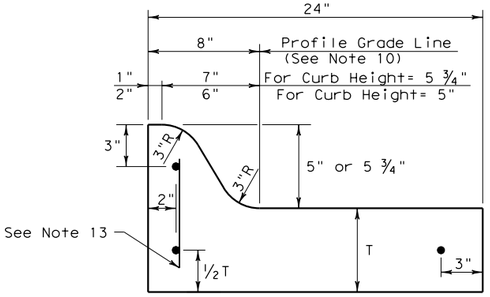

TYPE IIa CURB AND GUTTER
5" - 5 ¾" HEIGHT

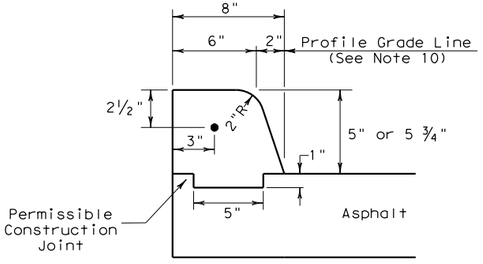

TYPE IV CURB (KEYED)
5" - 5 ¾" HEIGHT

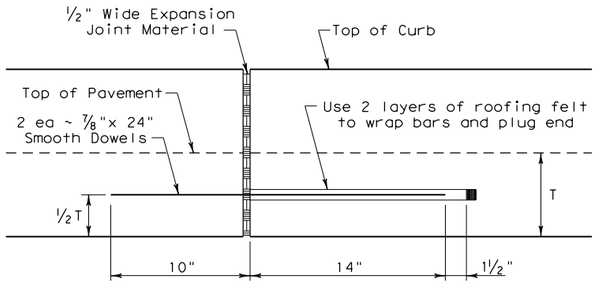

EXPANSION JOINT DETAIL

CURB TRANSITION NOTE:
Field conditions may require a longer or shorter transition, and shall be shown elsewhere in the plans, or as directed by the Engineer.

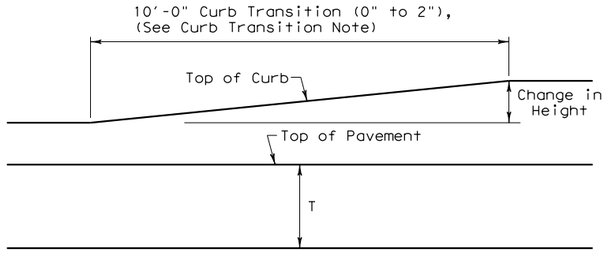

CURB TRANSITION
Note: To be paid for as Highest Curb

GENERAL NOTES

1. All materials and construction shall be in accordance with Item 529, "Concrete Curb, Gutter, and Combined Curb and Gutter."
2. Concrete shall be Class A.
3. When reinforcing bars are used, they shall be No.4 unless otherwise shown. The use of fiber reinforced concrete in lieu of reinforcing steel is acceptable. Use fibers meeting the requirements of DMS 4550, "Fibers for Concrete," and dose fibers in accordance with Material Producers List (MPL) "Fibers for Class A and B Concrete Applications."
4. Round exposed sharp edges with a rounding tool, to a minimum radius of ¼ inch.
5. All existing curbs and driveways to be removed shall be sawed or removed at existing joints.
6. Where concrete curb is to be placed on existing concrete pavement, Bar B may be drilled and grouted in place, or may be inserted into fresh concrete.
7. Expansion and contraction joints shall be constructed to match pavement joints in all curbs and curb and gutter adjacent to jointed concrete pavement. Where placement of curb or curb and gutter is not adjacent to concrete pavement, expansion joints shall be provided at structures, curb returns at streets, and at locations directed by The Engineer.
8. Vertical and horizontal dowel bars and transverse reinforcing bars shall be placed at four feet C~C.
9. Dimension 'T' shown is the thickness of concrete pavement. When curb is installed adjacent to flexible pavement dimension 'T' is 8" maximum.
10. Usual profile grade line. Refer to typical sections and plan-profile sheets for exact locations.
11. One-half inch expansion joint material shall be provided where curb or curb and gutter is adjacent to sidewalk or riprap.
12. When horizontal permissible construction joints are used, the longitudinal pavement steel shall be placed in accordance with pavement details shown elsewhere in the plans. Reinforcing steel for curb section shall then conform to that required for concrete curb.
13. Bar B placement as needed (typically at four ft. C-C) to support curb reinforcing steel during concrete placement.

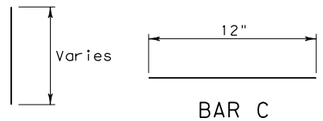

BAR B

BAR C

Texas Department of Transportation

Design Division Standard

CONCRETE CURB AND CURB AND GUTTER

CCCG-22

FILE: cccg21.dgn	DN: TXDOT	CK: AN	DW: CS	CK: KM	
© TxDOT: JUNE 2022	CONT	SECT	JOB	HIGHWAY	
REVISIONS	0337	01	053	SH 29	
	DIST	COUNTY		SHEET NO.	
	AUS	WILLIAMSON		104	

DISCLAIMER:
The use of this standard is governed by the "Texas Engineering Practice Act". No warranty of any kind is made by TxDOT for any purpose whatsoever. TxDOT assumes no responsibility for the conversion of this standard to other formats or for incorrect results or damages resulting from its use.

DATE: 12/18/2025 2:03:26 PM
FILE: pw://kh-pw.bentley.com:kh-pw-01/Documents/01 Active Projects/IX-GEO-069284005 - SH 29 Widening/4 - Design/Plan Set/3. Roadway/STANDARDS/crcp124.dgn

TABLE NO. 1 LONGITUDINAL STEEL				
SLAB THICKNESS AND BAR SIZE		LONGITUDINAL STEEL BARS	FIRST SPACING AT EDGE OR JOINT	LONG. STEEL VERTICAL POSITION FROM BOTTOM OF PAVEMENT
T (IN.)	BAR SIZE	SPACING C (IN.)	SPACING a (IN.)	T1 (IN.)
7.0	#5	6.5	3 TO 4	3.5
7.5	#5	6.0	3 TO 4	3.75
8.0	#6	9.0	3 TO 4	4.0
8.5	#6	8.5	3 TO 4	4.25
9.0	#6	8.0	3 TO 4	4.5
9.5	#6	7.5	3 TO 4	4.75
10.0	#6	7.0	3 TO 4	5.0
10.5	#6	6.75	3 TO 4	5.5
11.0	#6	6.5	3 TO 4	6.0
11.5	#6	6.25	3 TO 4	6.5
12.0	#6	6.0	3 TO 4	7.0
12.5	#6	5.75	3 TO 4	7.5
13.0	#6	5.5	3 TO 4	8.0

TABLE NO. 2 TRANSVERSE STEEL AND TIE BARS						
SLAB THICKNESS (IN.)	TRANSVERSE STEEL		TIE BARS AT LONGITUDINAL CONTRACTION JOINT (SECTION Z-Z)		TIE BARS AT LONGITUDINAL CONSTRUCTION JOINT (SECTION Y-Y)	
	BAR SIZE	SPACING (IN.)	BAR SIZE	SPACING (IN.)	BAR SIZE	SPACING (IN.)
7.0 - 7.5	#5*	48	#5*	48	#5*	24
8.0 - 13.0	#5*	48	#6	48	#6	24

*CONTRACTOR MAY USE #6 REINFORCING STEEL INSTEAD OF #5 REINFORCING STEEL OR COMBINATION OF EACH SIZE

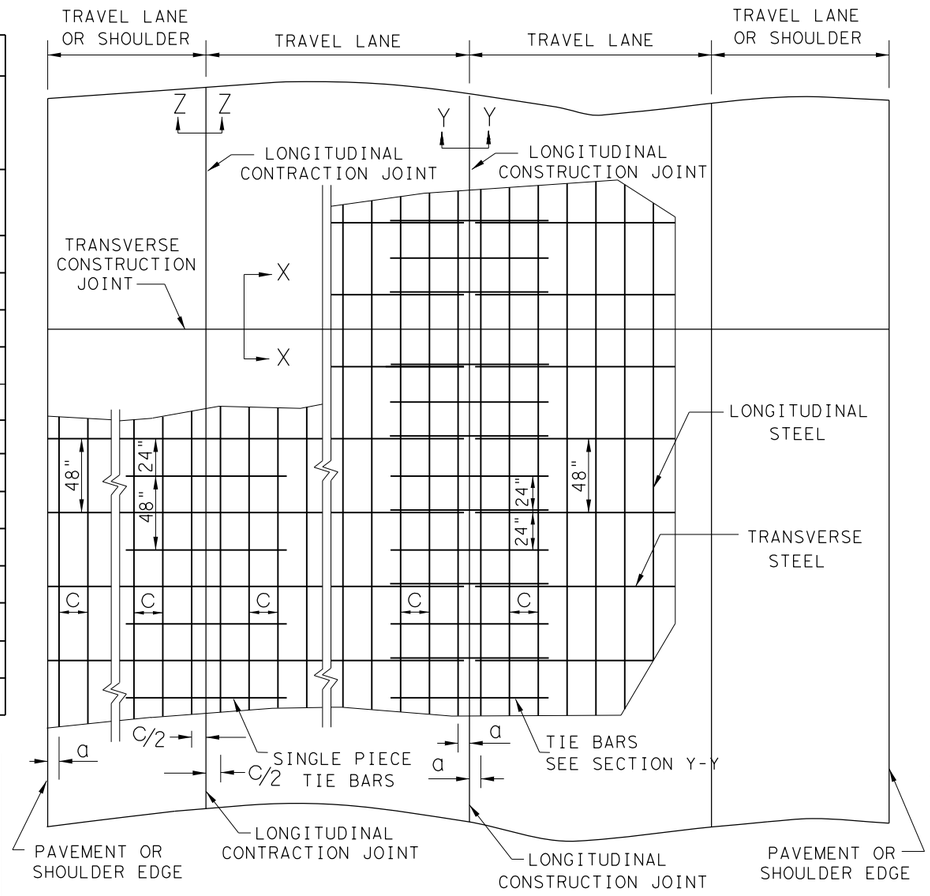

TYPICAL PAVEMENT LAYOUT

PLAN VIEW (NOT TO SCALE)

GENERAL NOTES

1. DETAILS FOR PAVEMENT WIDTH, PAVEMENT THICKNESS AND THE CROWN CROSS-SLOPE SHALL BE SHOWN ELSEWHERE IN THE PLANS. FOR PAVEMENTS WIDER THAN 100 FT. WITHOUT A FREE LONGITUDINAL JOINT, ADDITIONAL DETAIL MAY BE SHOWN ELSEWHERE IN THE PLANS.
2. USE COARSE AGGREGATES WITH A RATED COEFFICIENT OF THERMAL EXPANSION (CoTE) OF NOT MORE THAN 5.5 X 10^{-6} IN/IN/ °F AS LISTED IN THE CONCRETE RATED SOURCE QUALITY CATALOG (CRSQC).
3. ALL THE REINFORCING STEEL AND TIE BARS SHALL BE DEFORMED STEEL BARS CONFORMING TO ASTM A 615 (GRADE 60) OR ASTM A 996 (GRADE 60) OR ABOVE. STEEL BAR SIZES AND SPACINGS SHALL CONFORM TO TABLE NO.1 AND TABLE NO.2.
4. STEEL BAR PLACEMENT TOLERANCE SHALL BE +/- 1 IN. HORIZONTALLY AND +/- 0.5 IN. VERTICALLY. CALCULATED AVERAGE BAR SPACING (CONCRETE PLACEMENT WIDTH / NUMBER OF LONGITUDINAL BARS) SHALL CONFORM TO TABLE NO.1.
5. ADJUST REINFORCING STEEL VERTICALLY USING SHIMS OR OTHER METHODS, AS APPROVED, TO MEET VERTICAL TOLERANCES PRIOR TO CONCRETE PLACEMENT.
6. PAVEMENT WIDTHS OF MORE THAN 15 FT. SHALL HAVE A LONGITUDINAL JOINT (SECTION Z-Z OR SECTION Y-Y). THESE JOINTS SHALL BE LOCATED WITHIN 6 IN. OF THE LANE LINE UNLESS THE JOINT LOCATION IS SHOWN ELSEWHERE ON THE PLANS.
7. THE MINIMUM PROJECTION OF TIE BARS INTO THE ADJACENT PLACEMENT IS 22.5 IN. for #6 BARS AND 18.5 IN. FOR #5 BARS.
8. SEE STANDARD SHEET "CONCRETE CURB AND CURB AND GUTTER," FOR DETAILS WHEN TYING CONCRETE CURB OR CURB GUTTER AT A LONGITUDINAL JOINT.
9. REPLACE MISSING OR DAMAGED TIE BARS WITHOUT ADDITIONAL COMPENSATION BY DRILLING MIN.10 IN. DEEP AND GROUTING TIE BARS WITH TYPE III, CLASS C EPOXY. MEET THE PULL-OUT TEST REQUIREMENTS IN ITEM 361.
10. OMIT TIE BARS LOCATED WITHIN 18-IN. OF THE TRANSVERSE CONSTRUCTION JOINTS (SECTION X-X). USE HAND-OPERATED IMMERSION VIBRATORS TO CONSOLIDATE THE CONCRETE ADJACENT TO ALL FORMED JOINTS.
11. THE DETAIL FOR THE JOINT SEALANT AND RESERVOIR IS SHOWN ON STANDARD SHEET "CONCRETE PAVING DETAILS, JOINT SEALS."
12. LONGITUDINAL REINFORCING STEEL SPLICES SHALL BE A MINIMUM OF 25-IN.

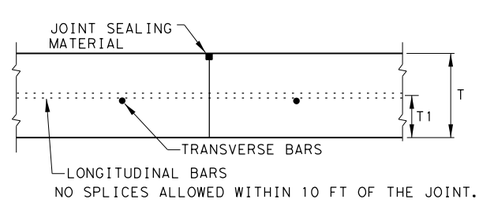

TRANSVERSE CONSTRUCTION JOINT
SECTION X - X

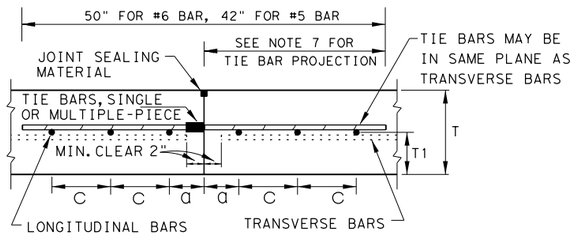

LONGITUDINAL CONSTRUCTION JOINT
SECTION Y - Y

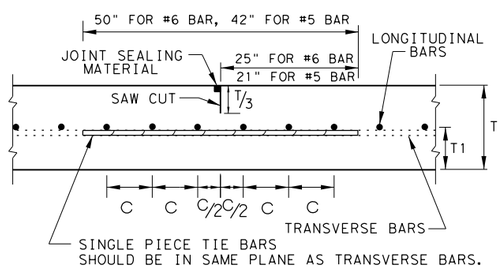

LONGITUDINAL CONTRACTION JOINT
SECTION Z - Z

SHEET 1 OF 2

Texas Department of Transportation

Design Division Standard

CONTINUOUSLY REINFORCED CONCRETE PAVEMENT

ONE LAYER STEEL BAR PLACEMENT
T - 7 to 13 INCHES

CRCP(1)-24

FILE: crcp124.dgn	DN: CES	CK: KM	DW: CES	CK: AN
©TxDOT: Sept 2024	CONT	SECT	JOB	HIGHWAY
REVISIONS	0337	01	053	SH 29
	DIST	COUNTY		SHEET NO.
	AUS	WILLIAMSON		105

DISCLAIMER:
The use of this standard is governed by the "Texas Engineering Practice Act". No warranty of any kind is made by TxDOT for any purpose whatsoever. TxDOT assumes no responsibility for the conversion of this standard to other formats or for incorrect results or damages resulting from its use.

DATE: 12/18/2025 2:03:27 PM
FILE: pw://kh-pw.bentley.com:kh-pw-01/Documents/01 Active Projects/TX-GEO-069284005 - SH 29 Widening/4 - Design/Plan Set/3. Roadway/STANDARDS/crcp124.dgn

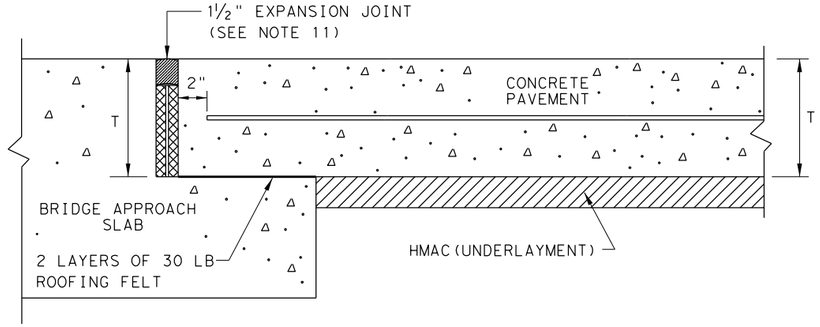

TRANSVERSE EXPANSION JOINT DETAIL
AT BRIDGE APPROACH

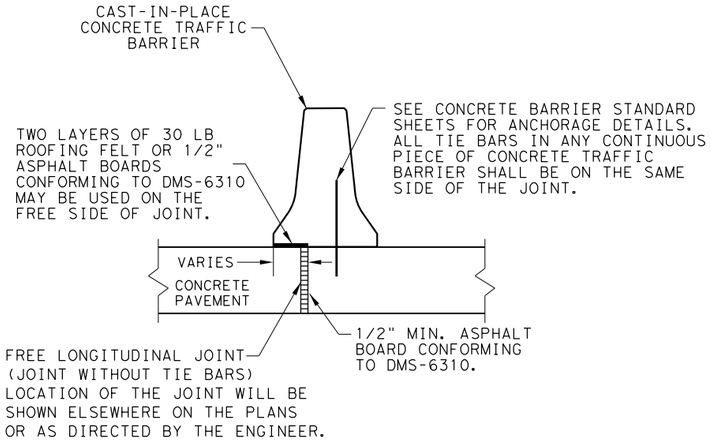

CENTERLINE FREE LONGITUDINAL JOINT DETAIL

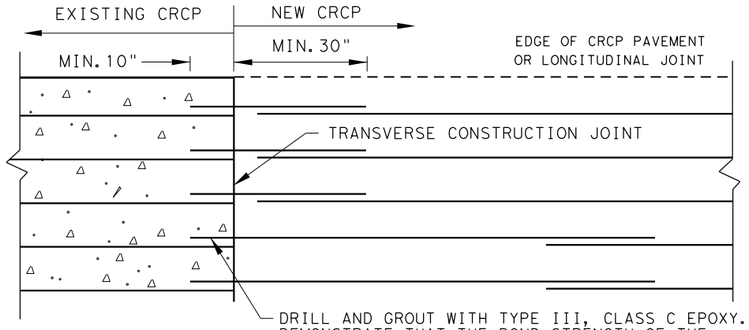

OPTION A: DRILL AND EPOXY
PLAN VIEW (NOT TO SCALE)

1. BEFORE CONCRETE PLACEMENT, PERFORM PULL-OUT TESTS ON EPOXY-GROUTED TIE BARS IN ACCORDANCE WITH ITEM 360.
2. SPACE TIE BARS AT 24" SPACING. USE #6 TIE BARS FOR 8" AND THICKER PAVEMENTS, USE #5 TIE BARS FOR LESS THAN 8" THICK PAVEMENTS.

LONGITUDINAL WIDENING JOINT DETAIL

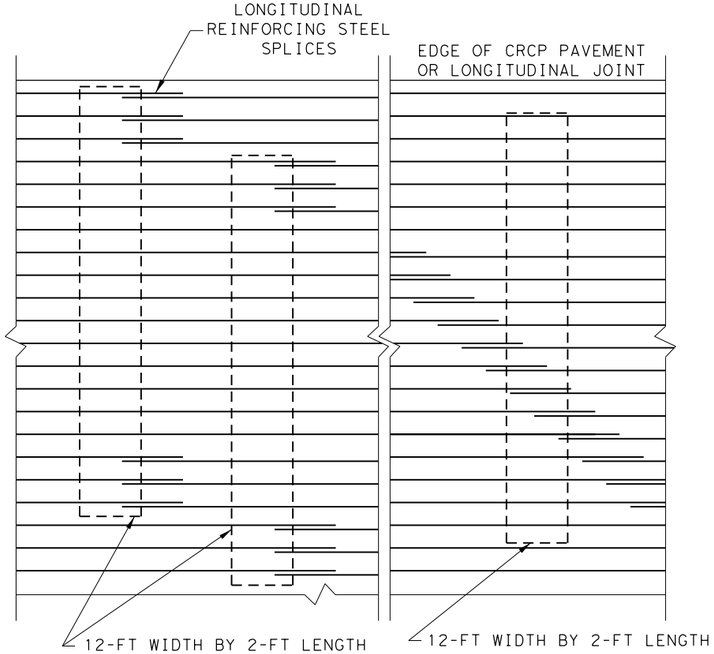

STAGGER THE LAP LOCATIONS SO THAT NO MORE THAN 1/3 OF THE LONGITUDINAL STEEL IS SPLICED IN ANY GIVEN 12-FT. WIDTH AND 2-FT. LENGTH OF THE PAVEMENT. ANY OTHER LAP CONFIGURATION MEETING THIS REQUIREMENT WILL BE ALLOWED.

EXAMPLES OF LAP CONFIGURATION
PLAN VIEW (NOT TO SCALE)

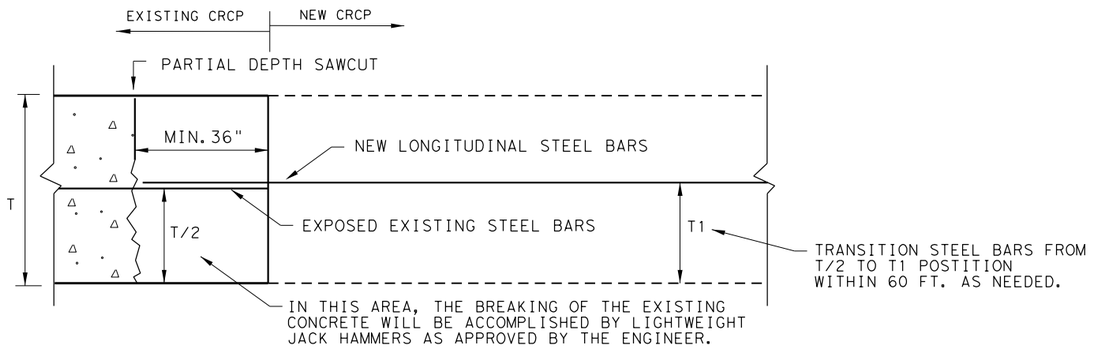

OPTION B: BREAKBACK AND LAP

TRANSVERSE TIE JOINT DETAIL
NEW CRCP TO EXISTING CRCP

SHEET 2 OF 2

Texas Department of Transportation

Design Division Standard

CONTINUOUSLY REINFORCED CONCRETE PAVEMENT

ONE LAYER STEEL BAR PLACEMENT
T - 7 to 13 INCHES

CRCP(1)-24

FILE: crcp124.dgn	DN: TxDOT	CK: KM	DW: CES	CK: AN
©TxDOT: Sept 2024	CONT	SECT	JOB	HIGHWAY
REVISIONS	0337	01	053	SH 29
	DIST	COUNTY		SHEET NO.
	AUS	WILLIAMSON		106

DISCLAIMER:
The use of this standard is governed by the "Texas Engineering Practice Act". No warranty of any kind is made by TxDOT for any purpose whatsoever. TxDOT assumes no responsibility for the conversion of this standard to other formats or for incorrect results or damages resulting from its use.

DATE:
FILE:

METHOD B: JOINT SEALING COMPOUND

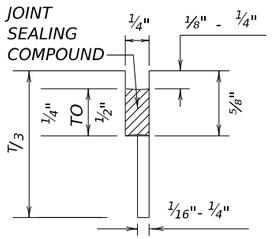

LONGITUDINAL SAWED CONTRACTION JOINT

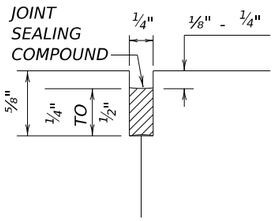

LONGITUDINAL OR TRANSVERSE CONSTRUCTION JOINT

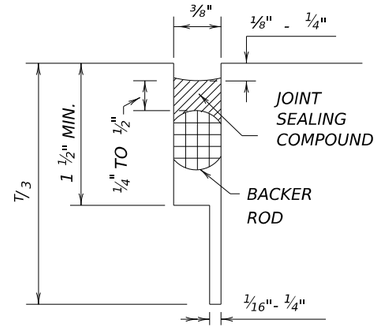

TRANSVERSE SAWED CONTRACTION JOINT

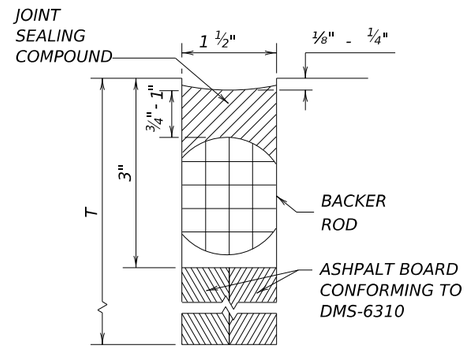

TRANSVERSE FORMED EXPANSION JOINT

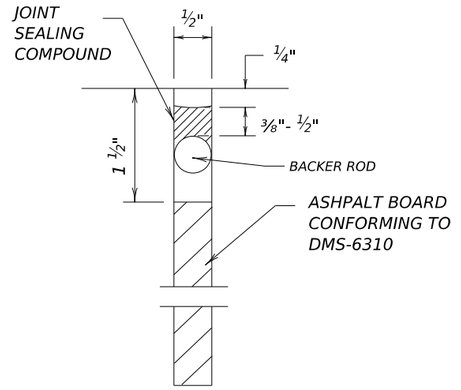

FORMED ISOLATION JOINT

METHOD A: PREFORMED COMPRESSION SEALS (PCS)(DMS-6310 CLASS 6)

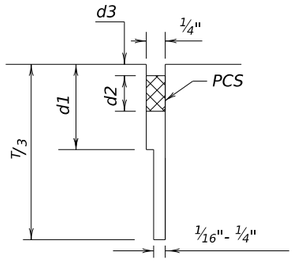

LONGITUDINAL SAWED CONTRACTION JOINT

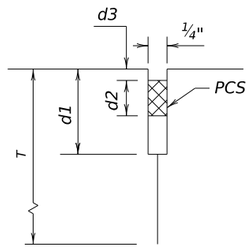

LONGITUDINAL OR TRANSVERSE CONSTRUCTION JOINT

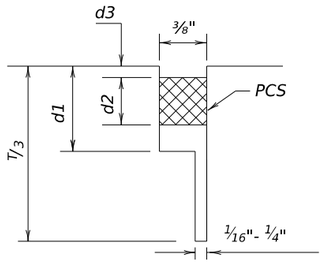

TRANSVERSE SAWED CONTRACTION JOINT

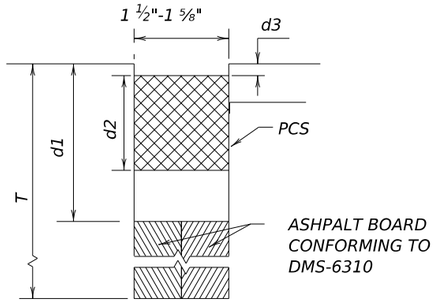

TRANSVERSE FORMED EXPANSION JOINT

GENERAL NOTES

1. UNLESS OTHERWISE SHOWN IN THE PLANS, EITHER METHOD "A" OR METHOD "B" MAY BE USED.
2. THE LOCATION OF JOINTS SHALL BE AS SHOWN ELSEWHERE IN THE PLANS.
3. THE JOINT RESERVOIR FOR SEALANT OR PCS SHALL BE SAWED UNLESS OTHERWISE SHOWN ON THE PLANS FOR THE LONGITUDINAL AND TRANSVERSE CONSTRUCTION JOINTS AND THE SAWED JOINTS.
4. DIMENSIONS d1, d2, AND d3 SHOWN IN METHOD A SHALL BE IN ACCORDANCE WITH THE PREFORMED COMPRESSION SEAL MANUFACTURER'S RECOMMENDATION.
5. REFER TO DMS-6310 "JOINT SEALANTS AND FILLERS" FOR SEALANT CLASSIFICATIONS.
6. FOR ALL METHOD "B" JOINTS, USE JOINT SEALANT CLASS 5 OR 8 UNLESS OTHERWISE SHOWN ON THE PLAN OR APPROVED AT NEW JOINTS.
7. USE JOINT SEALANT CLASS 5 OR 8 AT NEW JOINTS. USE JOINT SEALANT CLASS 4,5,7,OR 8 FOR MAINTANING EXISTING JOINTS.
8. THE JOINTS SHALL BE CLEANED IN ACCORDANCE WITH THE ITEM 438 "CLEANING AND SEALING JOINTS" OR ITEM 713 "CLEANING AND SEALING JOINTS AND CRACKS (CONCRETE PAVEMENT)".

Texas Department of Transportation

Design Division Standard

CONCRETE PAVING DETAILS

JOINT SEALS

JS-25

FILE: js25.dgn	DN: TxDOT		DN: AN	DW: AN	CK:
© TxDOT: OCTOBER 2025	CONT	SECT	JOB		HIGHWAY
REVISIONS	0337	01	053		SH 29
	DIST	COUNTY			SHEET NO.
	AUS	WILLIAMSON			107

DISCLAIMER:
The use of this standard is governed by the "Texas Engineering Practice Act". No warranty of any kind is made by TxDOT for any purpose whatsoever. TxDOT assumes no responsibility for the conversion of this standard to other formats or for incorrect results or damages resulting from its use.

DATE: 12/18/2025
FILE: pw://kh-pw.bentley.com:kh-pw-01/Documents/01 Active Projects/TX-GEO-069284005 - SH 29 Widening/4 - Design/Plan Set/3. Roadway/STANDARDS/ped18.dgn

TYPE 1

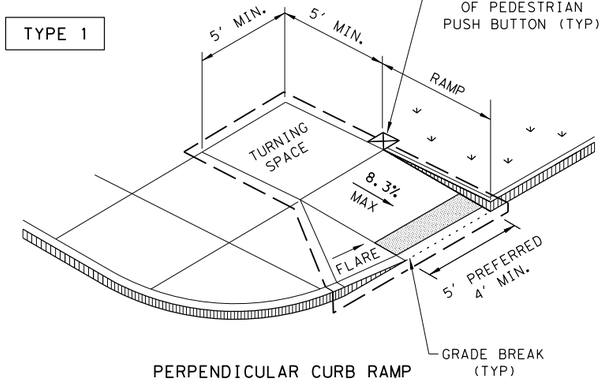

PERPENDICULAR CURB RAMP

TYPE 2

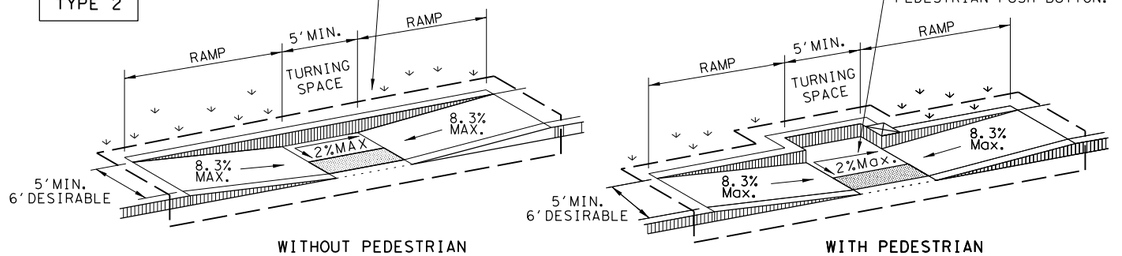

PARALLEL CURB RAMP

TYPE 3

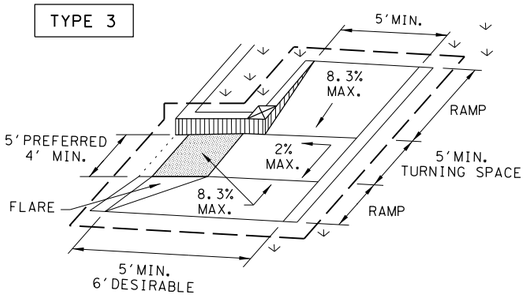

TYPE 6

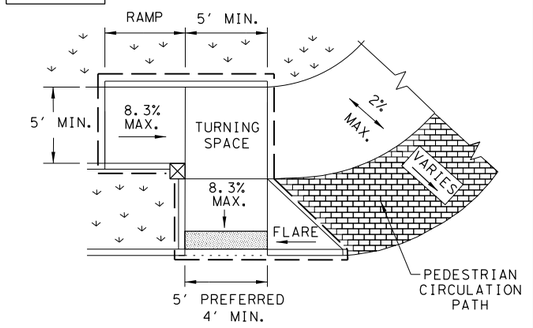

COMBINATION CURB RAMPS

TYPE 20

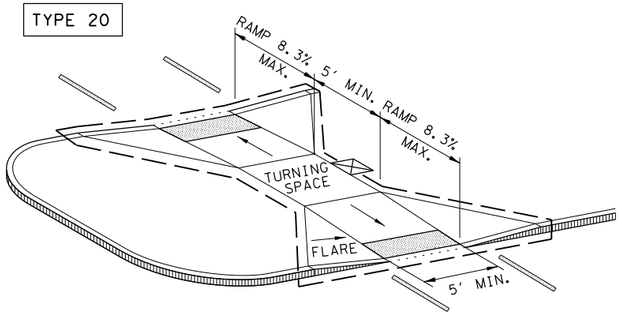

CURB RAMPS AT MEDIAN ISLANDS

TYPE 7
(SIDEWALK SET BACK FROM CURB)

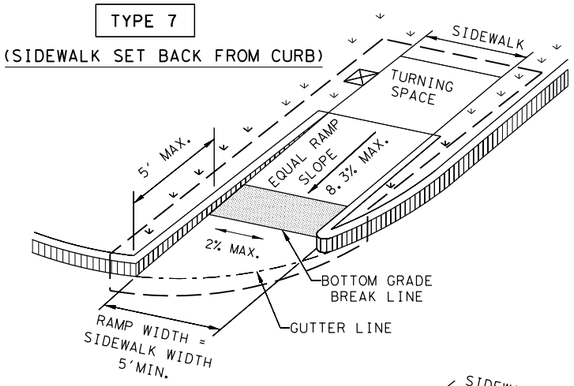

CROSS SLOPE NOT TO EXCEED 2% ON ANY PORTION OF RAMP, TURNING SPACE OR TRANSITION TO STREET.

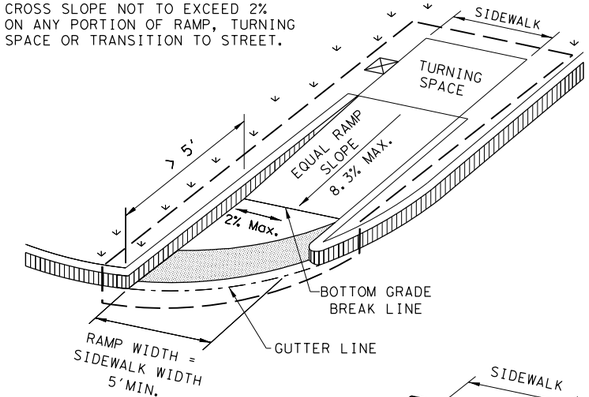

TYPE 10
(SIDEWALK ADJACENT TO CURB)

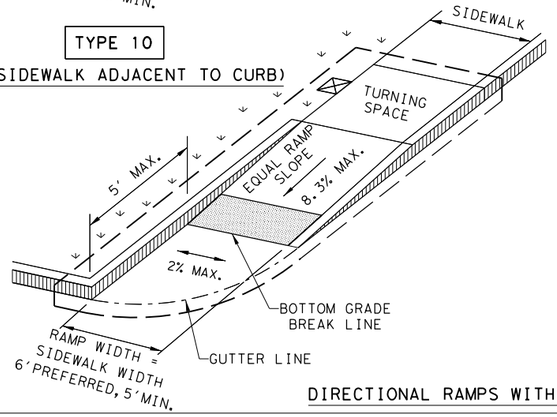

CROSS SLOPE NOT TO EXCEED 2% ON ANY PORTION OF RAMP, TURNING SPACE OR TRANSITION TO STREET.

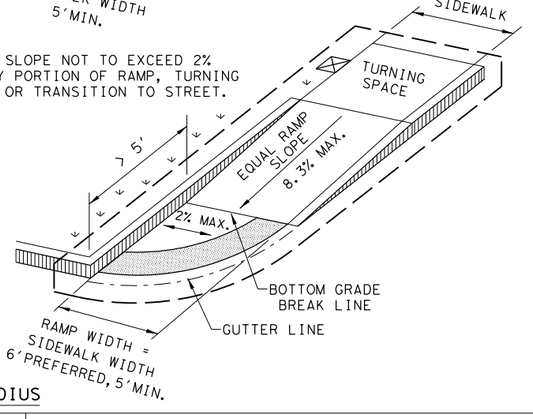

DIRECTIONAL RAMPS WITHIN RADIUS

TYPE 5

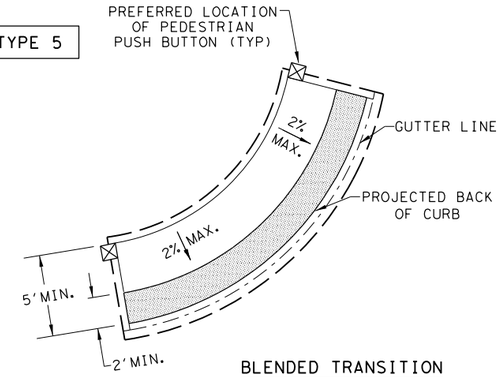

BLENDED TRANSITION
(FLUSH LANDING)

INSTALL DETECTABLE WARNING SURFACE AT EACH END OF THE CUT-THROUGH RAMP WITH A MINIMUM 2' USUAL SIDEWALK SURFACE BETWEEN. IF MEDIAN IS LESS THAN 6' WIDE, ELIMINATE DETECTABLE WARNING SURFACES.

TYPE 21

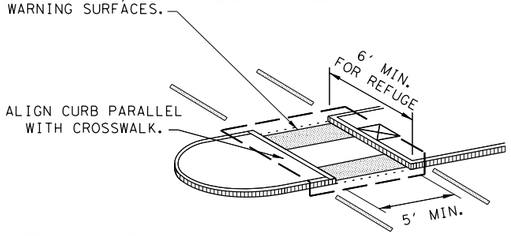

NOTE: CURB DETAILS ARE SHOWN ELSEWHERE IN THE PLANS.

TYPE 22

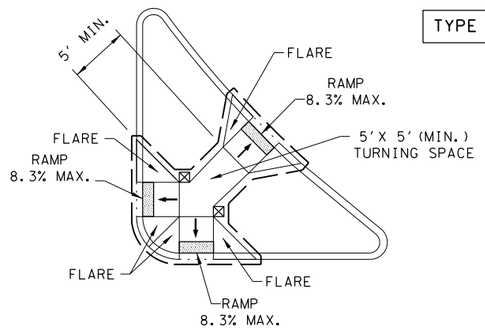

COMBINATION ISLAND RAMPS

BOTTOM GRADE BREAK OF CURB RAMP WILL NORMALLY BE AT GUTTER LINE. SURFACE SLOPES AT GRADE BREAKS SHALL BE FLUSH.

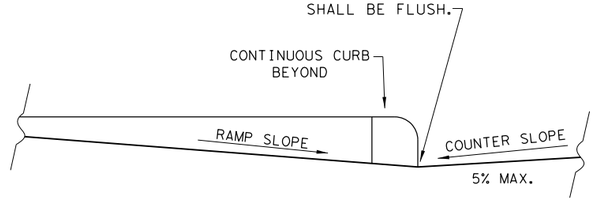

TYPICAL SECTION OF PERPENDICULAR CURB RAMP AT CONNECTION TO ROADWAY

NOTES / LEGEND:

SEE GENERAL NOTES ON SHEET 2 OF 4 FOR MORE INFORMATION.

DENOTES PLANTING OR NON-WALKING SURFACE NOT PART OF PEDESTRIAN CIRCULATION PATH.

DETECTABLE WARNING SURFACE

DENOTES PREFERRED LOCATION OF PEDESTRIAN PUSH BUTTON IF APPLICABLE.

GUTTER LINE

GRADE BREAK

RAMP LIMITS OF PAYMENT

SHEET 1 OF 4

Texas Department of Transportation

Design Division Standard

PEDESTRIAN FACILITIES CURB RAMPS

PED-18

FILE: ped18	DN: TxDOT	DW: VP	CK: KM	CK: PK & JG
© TxDOT: MARCH, 2002	CONT	SECT	JOB	HIGHWAY
REVISIONS	0337	01	053	SH 29
REVISED 08,2005 REVISED 06,2012 REVISED 01,2018	DIST	COUNTY		SHEET NO.
	AUS	WILLIAMSON		108

DISCLAIMER:
The use of this standard is governed by the "Texas Engineering Practice Act". No warranty of any kind is made by TxDOT for any purpose whatsoever. TxDOT assumes no responsibility for the conversion of this standard to other formats or for incorrect results or damages resulting from its use.

DATE: 12/18/2025
FILE: pw://kh-pw.bentley.com:kh-pw-01/Documents/01 Active Projects/TX-GEO-069284005 - SH 29 Widening/4 - Design/Plan Set/3. Roadway/STANDARDS/ped18.dgn

GENERAL NOTES

CURB RAMPS

1. Install a curb ramp or blended transition at each pedestrian street crossing.
2. All slopes shown are maximum allowable. Cross slopes of 1.5% and lesser running should be used. Adjust curb ramp length or grade of approach sidewalks as directed.
3. Maximum allowable cross slope on sidewalk and curb ramp surfaces is 2%.
4. The minimum sidewalk width is 5′. Where the sidewalk is adjacent to the back of curb, a 6′ sidewalk width is desirable. Where a 5′ sidewalk cannot be provided due to site constraints, sidewalk width may be reduced to 4′ for short distances. 5′x 5′ passing areas at intervals not to exceed 200′ are required.
5. Turning Spaces shall be 5′x 5′ minimum. Cross slope shall be maximum 2%.
6. Clear space at the bottom of curb ramps shall be a minimum of 4′x 4′ wholly contained within the crosswalk and wholly outside the parallel vehicular travel path.
7. Provide flared sides where the pedestrian circulation path crosses the curb ramp. Flared sides shall be sloped at 10% maximum, measured parallel to the curb. Returned curbs may be used only where pedestrians would not normally walk across the ramp, either because the adjacent surface is planted, substantially obstructed, or otherwise protected.
8. Additional information on curb ramp location, design, light reflective value and texture may be found in the latest draft of the Proposed Guidelines for Pedestrian Facilities in the Public Right of Way (PROWAG) as published by the U.S. Architectural and Transportation Barriers Compliance Board (Access Board).
9. To serve as a pedestrian refuge area, the median should be a minimum of 6′ wide, measured from back of curbs. Medians should be designed to provide accessible passage over or through them.
10. Small channelization islands, which do not provide a minimum 5′x 5′ landing at the top of curb ramps, shall be cut through level with the surface of the street.
11. Crosswalk dimensions, crosswalk markings and stop bar locations shall be as shown elsewhere in the plans. At intersections where crosswalk markings are not required, curb ramps shall align with theoretical crosswalks unless otherwise directed.
12. Provide curb ramps to connect the pedestrian access route at each pedestrian street crossing. Handrails are not required on curb ramps.
13. Curb ramps and landings shall be constructed and paid for in accordance with Item 531 "Sidewalks".
14. Place concrete at a minimum depth of 5" for ramps, flares and landings, unless otherwise directed.
15. Furnish and install No. 3 reinforcing steel bars at 18" o.c. both ways, unless otherwise directed.
16. Provide a smooth transition where the curb ramps connect to the street.
17. Curbs shown on sheet 1 within the limits of payment are considered part of the curb ramp for payment, whether it is concrete curb, gutter, or combined curb and gutter.
18. Existing features that comply with applicable standards may remain in place unless otherwise shown on the plans.

DETECTABLE WARNING MATERIAL

19. Curb ramps must contain a detectable warning surface that consists of raised truncated domes complying with PROWAG. The surface must contrast visually with adjoining surfaces, including side flares. Furnish and install an approved cast-in-place dark brown or dark red detectable warning surface material adjacent to uncolored concrete, unless specified elsewhere in the plans.
20. Detectable Warning Materials must meet TxDOT Departmental Materials Specification DMS 4350 and be listed on the Material Producer List. Install products in accordance with manufacturer's specifications.
21. Detectable warning surfaces must be firm, stable and slip resistant.
22. Detectable warning surfaces shall be a minimum of 24 inches in depth in the direction of pedestrian travel, and extend the full width of the curb ramp or landing where the pedestrian access route enters the street.
23. Detectable warning surfaces shall be located so that the edge nearest the curb line is at the back of curb and neither end of that edge is greater than 5 feet from the back of curb. Detectable warning surfaces may be curved along the corner radius.
24. Shaded areas on Sheet 1 of 4 indicate the approximate location for the detectable warning surface for each curb ramp type.

DETECTABLE WARNING PAVERS (IF USED)

25. Furnish detectable warning paver units meeting all requirements of ASTM C-936, C-33. Lay in a two by two unit basket weave pattern or as directed.
26. Lay full-size units first followed by closure units consisting of at least 25 percent (25%) of a full unit. Cut detectable warning paver units using a power saw.

SIDEWALKS

27. Provide clear ground space at operable parts, including pedestrian push buttons. Operable parts shall be placed within unobstructed reach range specified in PROWAG section R406.
28. Place traffic signal or illumination poles, ground boxes, controller boxes, signs, drainage facilities and other items so as not to obstruct the pedestrian access route or clear ground space.
29. Street grades and cross slopes shall be as shown elsewhere in the plans.
30. Changes in level greater than 1/4 inch are not permitted.
31. The least possible grade should be used to maximize accessibility. The running slope of sidewalks and crosswalks within the public right of way may follow the grade of the parallel roadway. Where a continuous grade greater than five percent (5%) must be provided, handrails may be desirable to improve accessibility. Handrails may also be needed to protect pedestrians from potentially hazardous conditions. If provided, handrails shall comply with PROWAG R409.
32. Handrail extensions shall not protrude into the usable landing area or into intersecting pedestrian routes.
33. Driveways and turnouts shall be constructed and paid for in accordance with Item "Intersections, Driveways and Turnouts". Sidewalks shall be constructed and paid for in accordance with Item, "Sidewalks".
34. Sidewalk details are shown elsewhere in the plans.

DETECTABLE WARNING SURFACE DETAILS

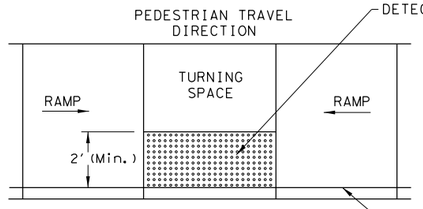

PARALLEL CURB RAMP

TYPICAL PLACEMENT OF DETECTABLE WARNING SURFACE ON LANDING AT STREET EDGE.

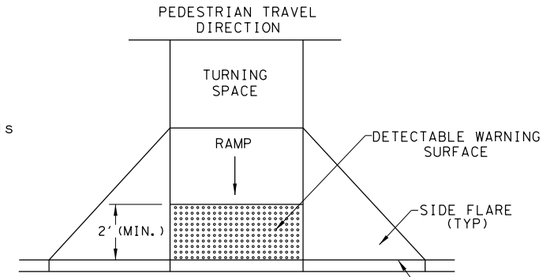

PERPENDICULAR CURB RAMP

TYPICAL PLACEMENT OF DETECTABLE WARNING SURFACE ON SLOPING RAMP RUN.

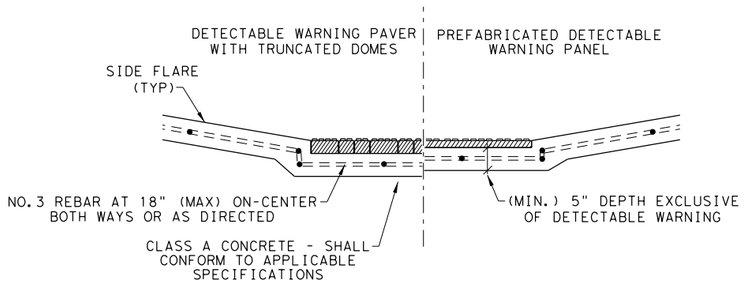

SECTION VIEW DETAIL
CURB RAMP AT DETECTIBLE WARNINGS

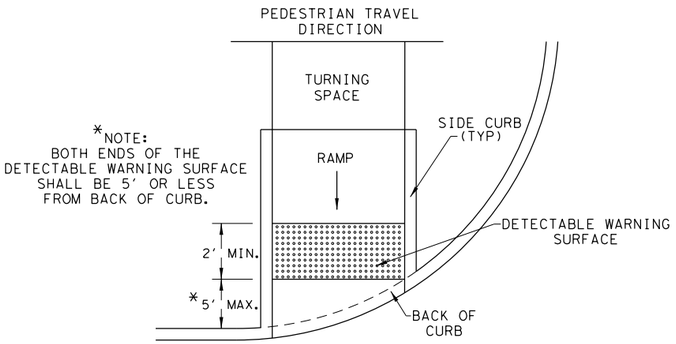

DIRECTIONAL CURB RAMP

TYPICAL PLACEMENT OF DETECTABLE WARNING SURFACE ON SLOPING RAMP RUN.

Texas Department of Transportation

Design Division Standard

PEDESTRIAN FACILITIES CURB RAMPS

PED-18

FILE: ped18	DN: TxDOT	DW: VP	CK: KM	CK: PK & JG
© TxDOT: MARCH, 2002	CONT	SECT	JOB	HIGHWAY
REVISIONS	0337	01	053	SH 29
REVISED 08,2005 REVISED 06,2012 REVISED 01,2018	DIST	COUNTY		SHEET NO.
	AUS	WILLIAMSON		109

DISCLAIMER:
The use of this standard is governed by the "Texas Engineering Practice Act". No warranty of any kind is made by TxDOT for any purpose whatsoever. TxDOT assumes no responsibility for the conversion of this standard to other formats or for incorrect results or damages resulting from its use.

DATE: 12/18/2025
FILE: pw://kh-pw.bentley.com:kh-pw-01/Documents/01 Active Projects/TX-GEO-069284005 - SH 29 Widening/4 - Design/Plan Set/3. Roadway/STANDARDS/ped18.dgn

SIDEWALK TREATMENT AT DRIVEWAYS

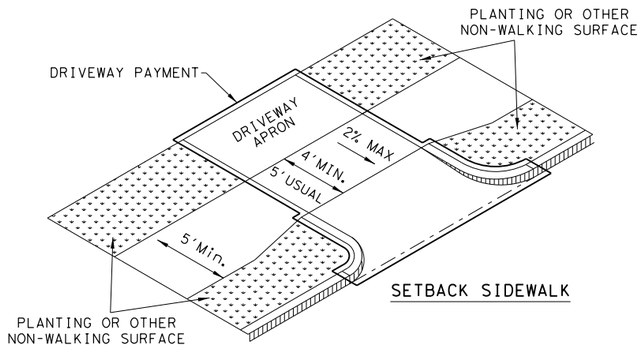

SETBACK SIDEWALK

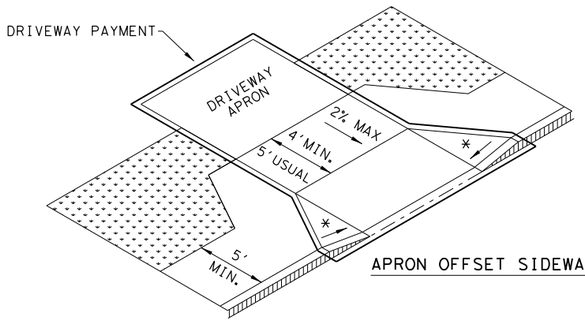

APRON OFFSET SIDEWALK

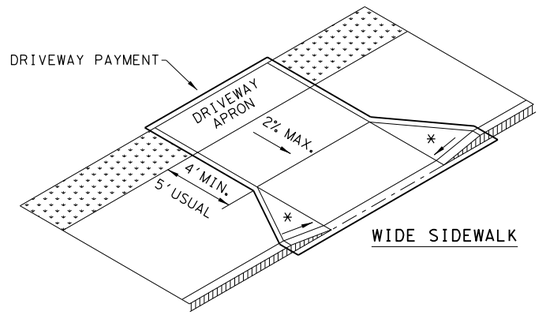

WIDE SIDEWALK

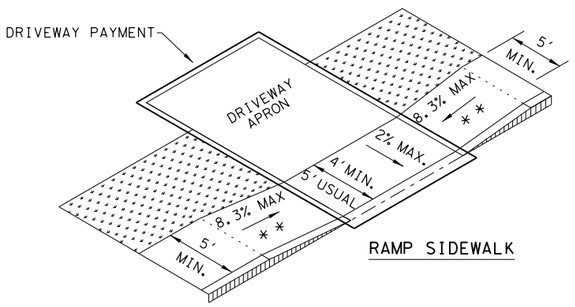

RAMP SIDEWALK

NOTES:

* WHERE DRIVEWAYS CROSS THE PEDESTRIAN ROUTE, SIDES SHALL BE FLARED AT 10% MAX SLOPE.

* * IF CURB HEIGHT IS GREATER THAN 6 INCHES, USE GRADE LESS THAN OR EQUAL TO 5%. HANDRAIL AND DETECTABLE WARNING ARE NOT REQUIRED.

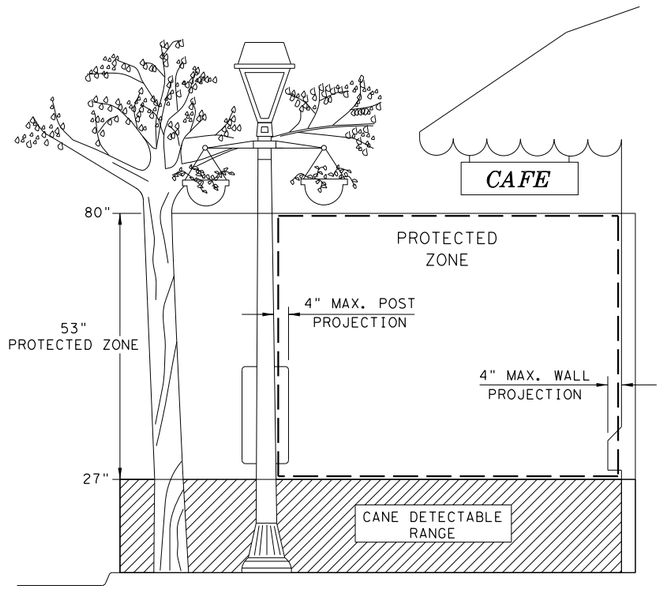

PROTECTED ZONE

NOTE: IN PEDESTRIAN CIRCULATION AREA, MAXIMUM 4" PROJECTION FOR POST OR WALL MOUNTED OBJECTS BETWEEN 27" AND 80" ABOVE THE SURFACE.

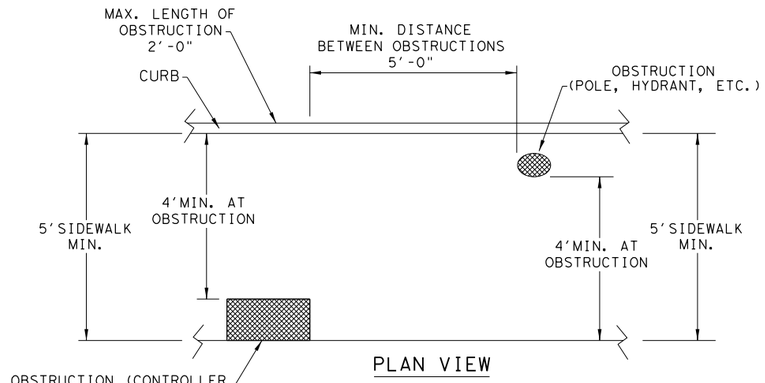

PLAN VIEW

PLACEMENT OF STREET FIXTURES

NOTE: ITEMS NOT INTENDED FOR PUBLIC USE. MINIMUM 4' X 4' CLEAR GROUND SPACE REQUIRED AT PUBLIC USE FIXTURES.

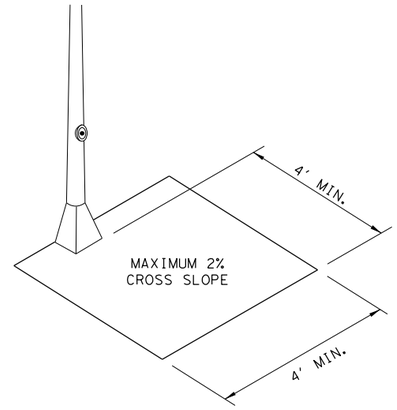

CLEAR SPACE ADJACENT TO PEDESTRIAN PUSH BUTTON

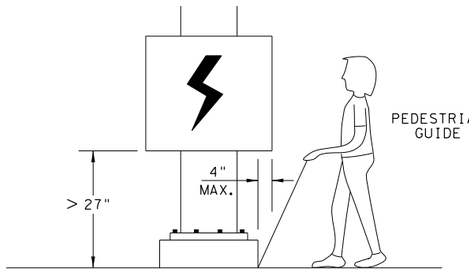

WHEN AN OBSTRUCTION OF A HEIGHT GREATER THAN 27" FROM THE SURFACE WOULD CREATE A PROTRUSION OF MORE THAN 4" INTO THE PEDESTRIAN CIRCULATION AREA, CONSTRUCT ADDITIONAL CURB OR FOUNDATION AT THE BOTTOM TO PROVIDE A MAXIMUM 4" OVERHANG.

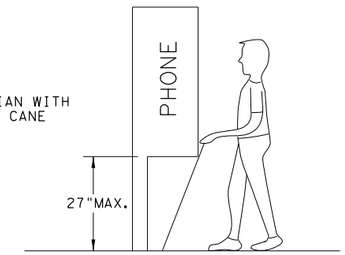

PROTRUDING OBJECTS OF A HEIGHT ≤ 27" ARE DETECTABLE BY CANE AND DO NOT REQUIRE ADDITIONAL TREATMENT.

DETECTION BARRIER FOR VERTICAL CLEARANCE < 80"

Texas Department of Transportation

Design Division Standard

PEDESTRIAN FACILITIES
CURB RAMPS

PED-18

FILE: ped18	DN: TxDOT		DW: VP	CK: KM	CK: PK & JG
© TxDOT: MARCH, 2002	CONT	SECT	JOB		HIGHWAY
REVISIONS	0337	01	053		SH 29
REVISED 08,2005 REVISED 06,2012 REVISED 01,2018	DIST	COUNTY			SHEET NO.
	AUS	WILLIAMSON			110

DISCLAIMER:
The use of this standard is governed by the "Texas Engineering Practice Act". No warranty of any kind is made by TxDOT for any purpose whatsoever. TxDOT assumes no responsibility for the conversion of this standard to other formats or for incorrect results or damages resulting from its use.

DATE: 12/18/2025
FILE: pw://kh-pw.bentley.com:kh-pw-01/Documents/01 Active Projects/TX-GEO-069284005 - SH 29 Widening/4 - Design/Plan Set/3. Roadway/STANDARDS/prd13.dgn

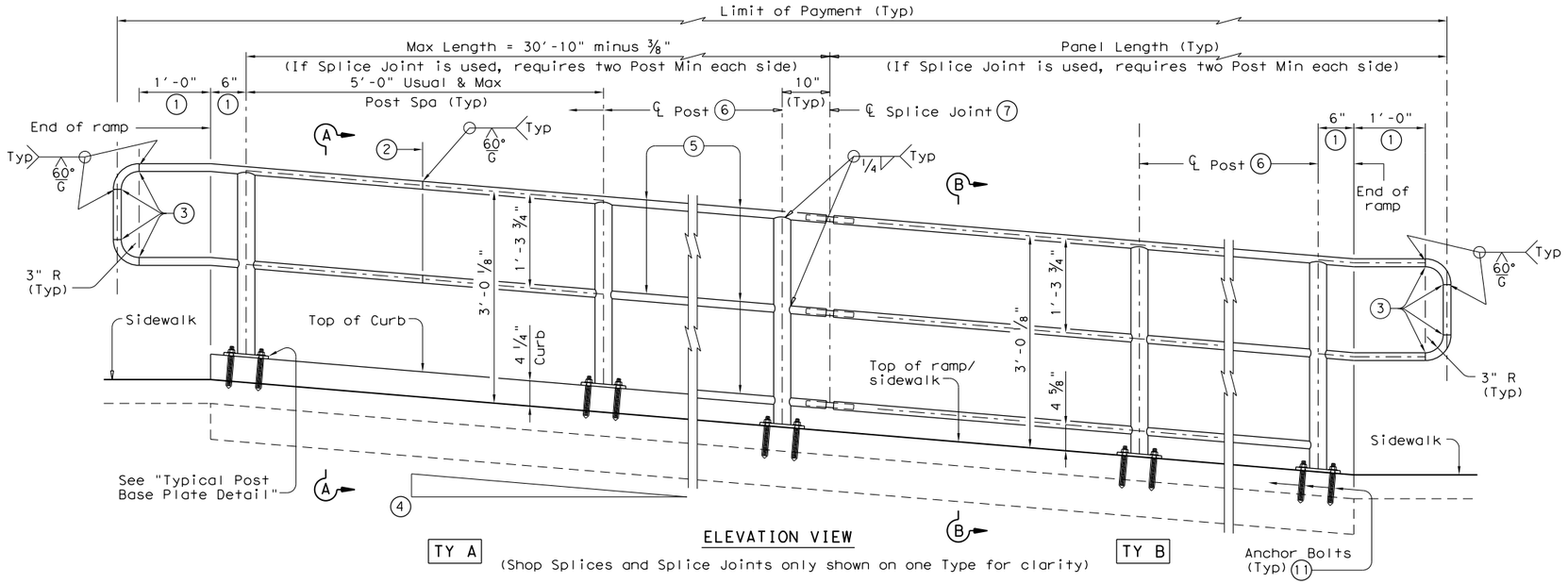

ELEVATION VIEW
(Shop Splices and Splice Joints only shown on one Type for clarity)

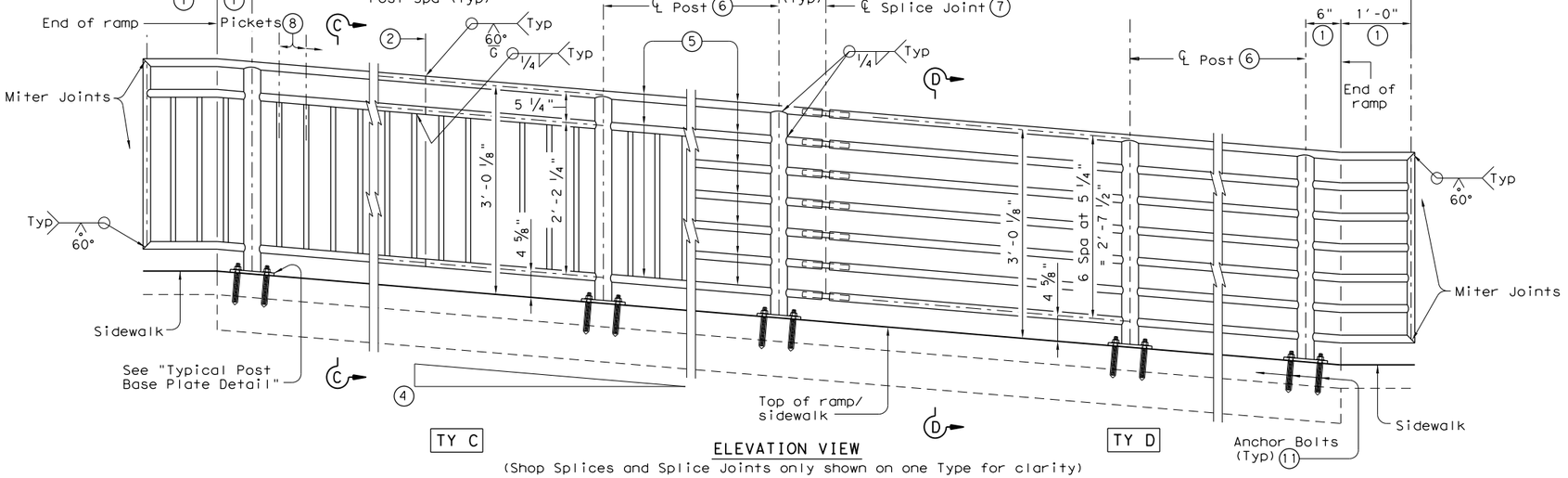

ELEVATION VIEW
(Shop Splices and Splice Joints only shown on one Type for clarity)

RECOMMENDED USAGE ⑨⑩	
Dropoff Height/ Condition	Recommended Rail Options
< 30" dropoff	TY A, TY B, TY C, or TY D
≥ 30" dropoff, or along Bike Path	TY E or TY F

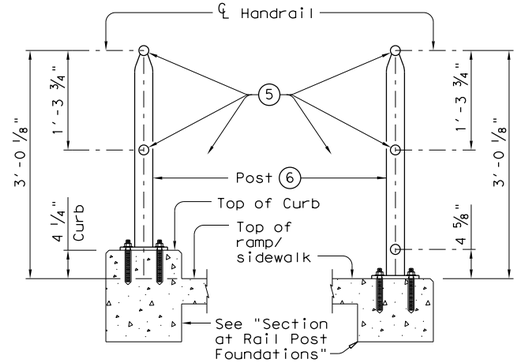

SECTION A-A
(Showing Handrail TY A)

SECTION B-B
(Showing Handrail TY B)

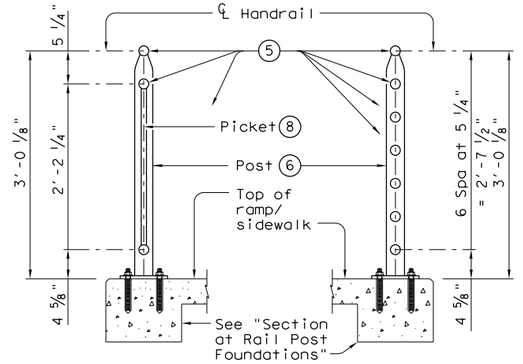

SECTION C-C
(Showing Handrail TY C)

SECTION D-D
(Showing Handrail TY D)

1. Parallel to ground.
2. One shop splice per panel is permitted with minimum 85 percent penetration. The weld may be square groove or single vee groove. Grind smooth.
3. Shop splice is permitted with minimum 85 percent penetration. The weld may be square groove or single vee groove. Grind smooth.
4. See Ramp Details located elsewhere in plans for ramp slope and dimensions. Maximum ramp slope will not exceed 8.3 percent. Level landing required for each 30" rise if grade exceeds 5 percent.
5. 1 ½" Dia. Standard Pipe (1.900" O.D., 0.145" wall thickness). Parallel to ramp / sidewalk. Provide holes as needed in 1 ½" Dia. pipe for galvanizing drainage and venting.
6. 2 ½" Dia. Standard Pipe (2.875" O.D., 0.203" wall thickness). See "Post Mount Detail" for crimping and trimming post to fit Dia. of top rail. Provide holes as needed in post for galvanizing drainage and venting. Plumb all posts.
7. See "Handrail Fabrication Details" for Splice Joints.
8. ℄ ⅝" Dia. Round Bar equal spacing at 4 ½" Max. Plumb all pickets.
9. When needed for accessibility (grade > 5 percent) or as needed for pedestrian safety.
10. Not to be used on bridges.
11. See "General Notes" for anchor bolt information.

SHEET 1 OF 3

Texas Department of Transportation

Design Division Standard

PEDESTRIAN HANDRAIL DETAILS

PRD-13

FILE: prd13.dgn	DN: TxDOT	CK: AM	DW: JTR	CK: CGL
©TxDOT Decmeber 2006	CONT	SECT	JOB	HIGHWAY
REVISIONS REVISED MAY, 2013 (VP)	0337	01	053	SH 29
	DIST	COUNTY		SHEET NO.
	AUS	WILLIAMSON		111

DISCLAIMER:
The use of this standard is governed by the "Texas Engineering Practice Act". No warranty of any kind is made by TxDOT for any purpose whatsoever. TxDOT assumes no responsibility for the conversion of this standard to other formats or for incorrect results or damages resulting from its use.

DATE: 12/18/2025
FILE: pw://kh-pw.bentley.com:kh-pw-01/Documents/01 Active Projects/TX-GEO-069284005 - SH 29 Widening/4 - Design/Plan Set/3. Roadway/STANDARDS/prd13.dgn

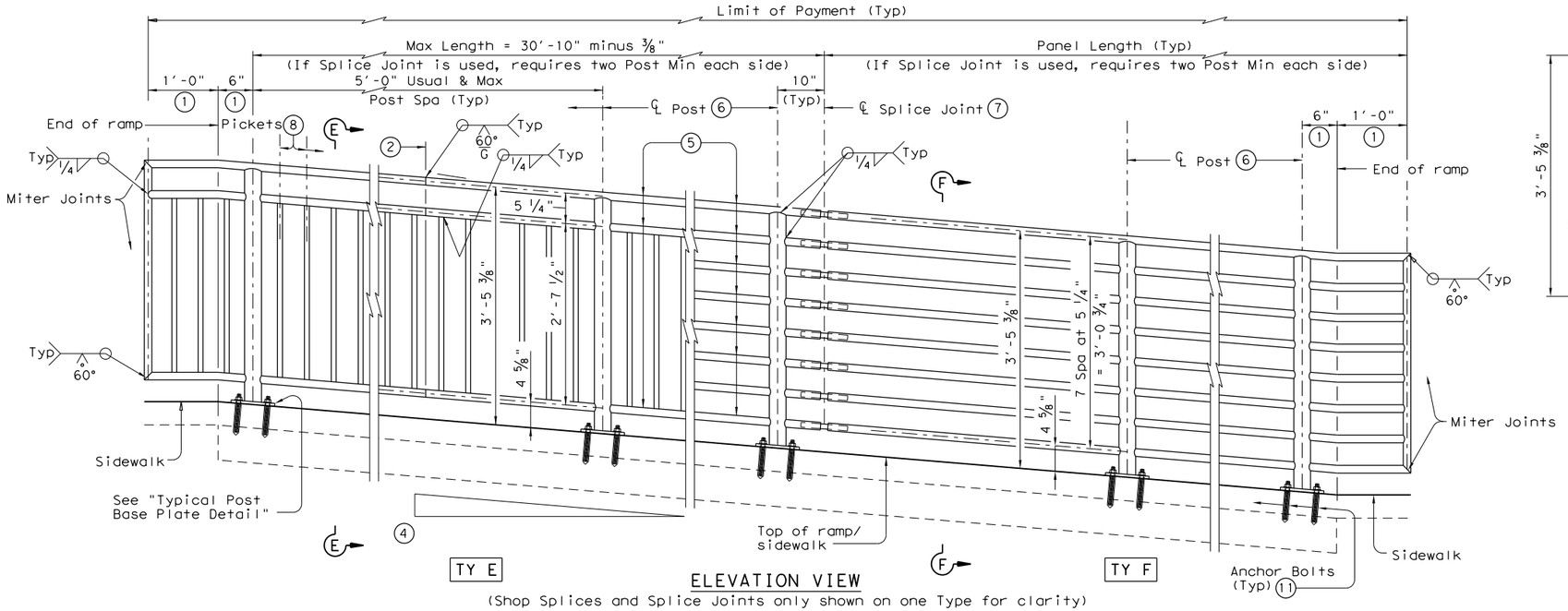

ELEVATION VIEW

(Shop Splices and Splice Joints only shown on one Type for clarity)

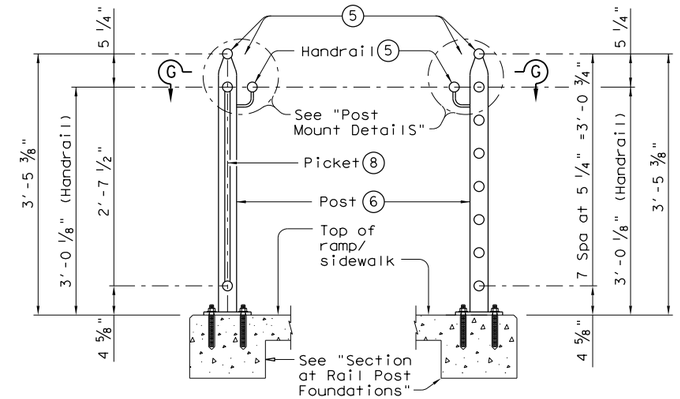

SECTION E-E

(Showing Handrail TY E)

SECTION F-F

(Showing Handrail TY F)

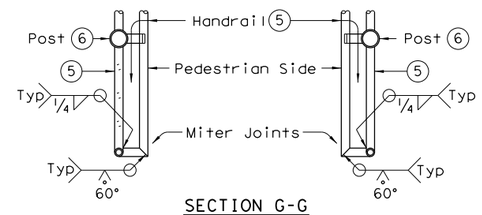

SECTION G-G

(Showing Handrail Termination)

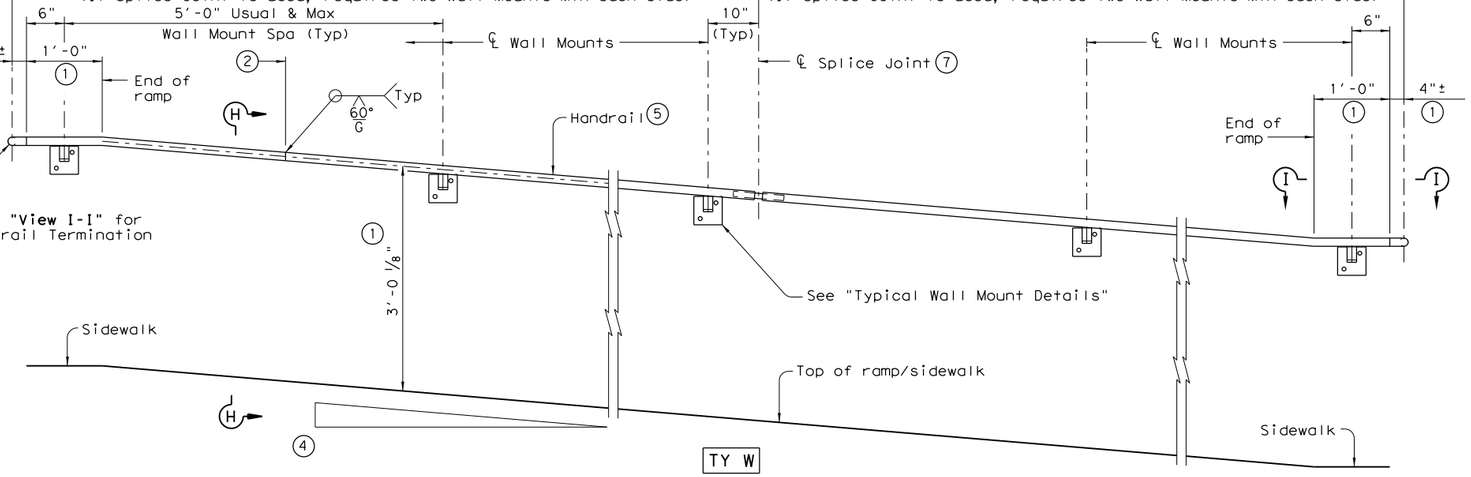

ELEVATION VIEW

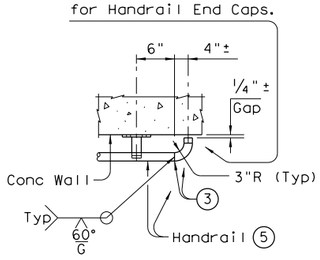

VIEW I-I

(Showing Handrail Termination)

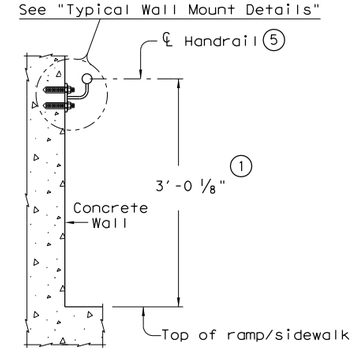

SECTION H-H

(Showing Handrail TY W)

1. Parallel to ground.
2. One shop splice per panel is permitted with minimum 85 percent penetration. The weld may be square groove or single vee groove. Grind smooth.
3. Shop splice is permitted with minimum 85 percent penetration. The weld may be square groove or single vee groove. Grind smooth.
4. See Ramp Details located elsewhere in plans for ramp slope and dimensions. Maximum ramp slope will not exceed 8.3 percent. Level landing required for each 30" rise if grade exceeds 5 percent.
5. 1 ½" Dia. Standard Pipe (1.900" O.D., 0.145" wall thickness). Parallel to ramp / sidewalk. Provide holes as needed in 1 ½" Dia. pipe for galvanizing drainage and venting.
6. 2 ½" Dia. Standard Pipe (2.875" O.D., 0.203" wall thickness). See "Post Mount Detail" for crimping and trimming post to fit Dia. of top rail. Provide holes as needed in post for galvanizing drainage and venting. Plumb all posts.
7. See "Handrail Fabrication Details" for Splice Joints.
8. ℄ ⅝" Dia. Round Bar equal spacing at 4 ½" Max. Plumb all pickets.
11. See "General Notes" for anchor bolt information.

Texas Department of Transportation

Design Division Standard

PEDESTRIAN HANDRAIL DETAILS

PRD-13

FILE: prd13.dgn	DN: TxDOT	CK: AM	DW: JTR	CK: CGL
©TxDOT December 2006	CONT	SECT	JOB	HIGHWAY
REVISIONS REVISED MAY, 2013 (VP)	0337	01	053	SH 29
	DIST	COUNTY		SHEET NO.
	AUS	WILLIAMSON		112

DISCLAIMER:
The use of this standard is governed by the "Texas Engineering Practice Act". No warranty of any kind is made by TxDOT for any purpose whatsoever. TxDOT assumes no responsibility for the conversion of this standard to other formats or for incorrect results or damages resulting from its use.

DATE: 12/18/2025
FILE: pw://kh-pw.bentley.com:kh-pw-01/Documents/01 Active Projects/TX-GEO-069284005 - SH 29 Widening/4 - Design/Plan Set/3. Roadway/STANDARDS/prd13.dgn

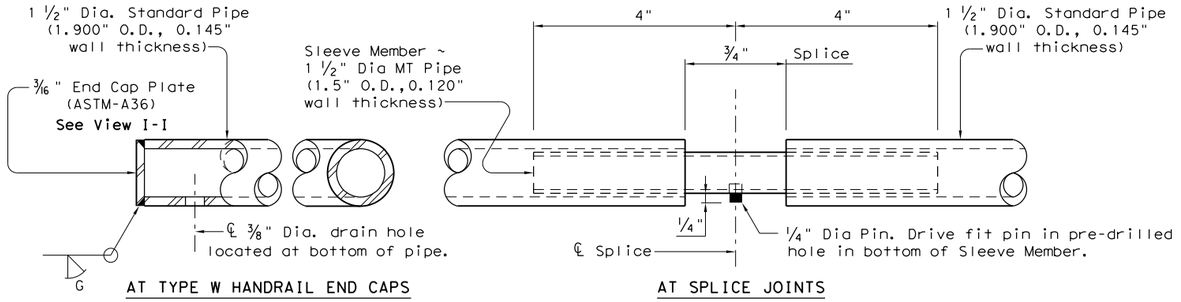

AT TYPE W HANDRAIL END CAPS

AT SPLICE JOINTS

HANDRAIL FABRICATION DETAILS

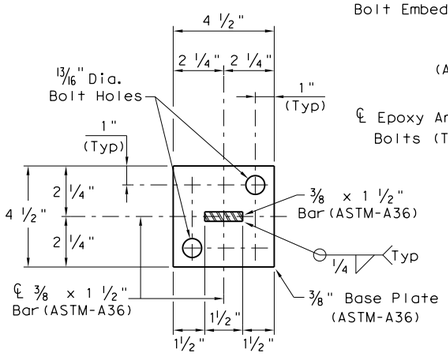

SECTION J-J
(Anchor Bolts not shown for clarity)

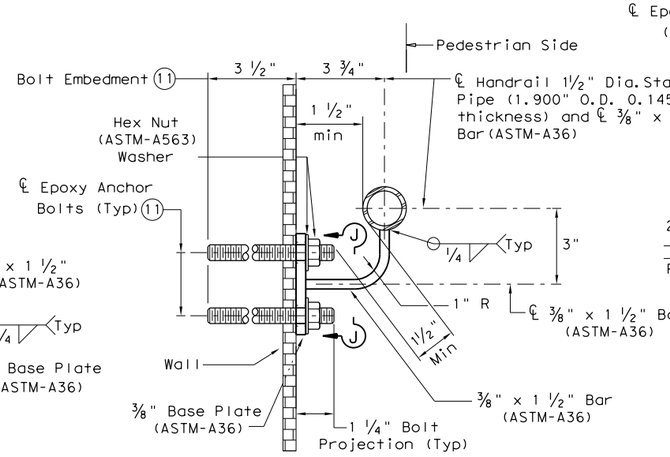

SECTION AT WALL MOUNT

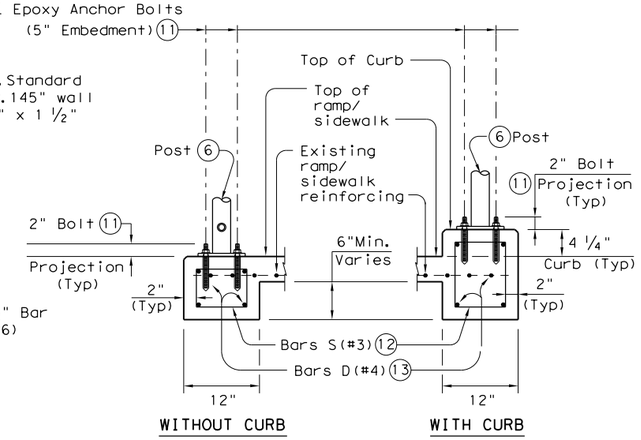

SECTION AT RAIL POST FOUNDATIONS

TYPICAL WALL MOUNT DETAILS

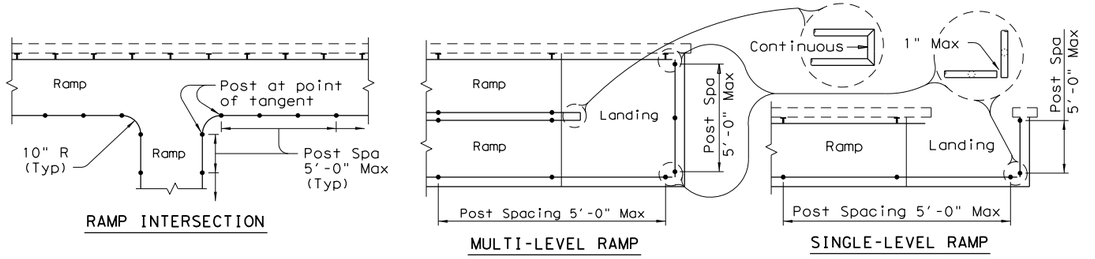

MULTI-LEVEL RAMP

SINGLE-LEVEL RAMP

RAMP INTERSECTION

PLAN SHOWING RAIL AT RAMP CONDITIONS

GENERAL NOTES

Designed according to ADAAG, Texas Accessibility Standards, Uniform Building Code, and AASHTO LRFD Specifications.

Handrail anchorage details shown on this standard may require modification for select structure types. See appropriate details elsewhere in plans for these modifications.

Pipe will conform to ASTM-A53 Grade B or A500 Grade B. Steel plates and steel bars will conform to ASTM-A36. Mechanical tubing (MT) will conform to ASTM A513 Grade 1015 or higher. Galvanize all steel components except reinforcing steel unless noted otherwise.

Concrete for foundations will be in accordance with Item 531 "Sidewalks". All reinforcing steel must be Grade 60. Bar laps, where required, will be as follows: Uncoated ~ #4 = 1'-5" Epoxy coated ~ #4 = 2'-1"

When the plans require painted steel, follow the requirements for painting galvanized steel in Item 446, "Cleaning and Painting Steel". Sleeve Members will receive galvanization and only get field painted after installation unless directed otherwise by Engineer.

Epoxy Anchor bolts for wall mount and post base plate will be ⅝" Dia. ASTM A36 threaded rods with one hex nut and one hardened steel washer at each bolt. ⅝" Dia. threaded rod embedment depth for wall mounts is 3 ½" and embedment depth for post base plate is 5".

Embed threaded rods into concrete with a Type III (Class C) epoxy meeting the requirements of DMS-6100, "Epoxies and Adhesives". Mix and dispense adhesive with the manufacturer's static mixing nozzle/dual cartridge system. Core drill holes (percussion drilling not permitted).

At the contractor's option the post base plate anchor bolts may be cast with the Ramp/Sidewalk (See Cast-in-Place Anchor Bolt Options).

Optional cast-in-place anchor bolts will be ⅝" Dia ASTM A307 Grade A bolts (or A36 threaded rods with one tack welded hex nut each) with one hex nut and one hardened steel washer at each bolt. Embedment depth of cast-in-place bolt will be 8" for post base plate.

Handrails and any wall or other surface adjacent to them will be free of any sharp or abrasive elements.

Submit shop drawings to the Engineer unless otherwise noted. For curved handrail applications, fabricate the handrail to the curve if radius is less than 600 ft. Shop drawings are required when rail is fabricated to the curve.

For all handrails, erection drawings will be submitted to the Engineer for approval to ensure proper installation.

Drawings will show handrail mount locations with bolts setting, spacing, ramp slope, and/or splice joint locations, and handrail lengths with identification showing where each handrail goes on the layout.

Payment for concrete sidewalks or curb ramps will be paid for in accordance with Item 531 "Sidewalks".

Payment for all items shown is to be included in unit price bid in accordance with Item 450 "Railing" of the type specified.

All exposed edges will be rounded or chamfered to approximately ⅛" by grinding.

(5) 1 ½" Dia. Standard Pipe (1.900" O.D., 0.145" wall thickness). Parallel to ramp/sidewalk. Provide holes as needed in 1 ½" Dia. pipe for galvanizing drainage and venting.

(6) 2 ½" Dia. Standard Pipe (2.875" O.D., 0.203" wall thickness). Plumb all posts. See "Post Mount Detail" for crimping and trimming post to fit the diamenter of top rail. Provide holes as needed in post for galvanizing drainage and venting.

(11) See "General Notes" for anchor bolt information.

(12) Bars S(#3) spaced at 12" Max (Spaced 3" from outside edge of overall length of Ramp/Sidewalk).

(13) Provide 1 ½" end cover to Bars D(#4) from outside edge of overall length of Ramp/Sidewalk.

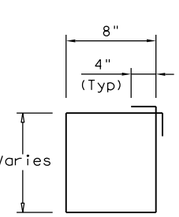

BARS S (#3)

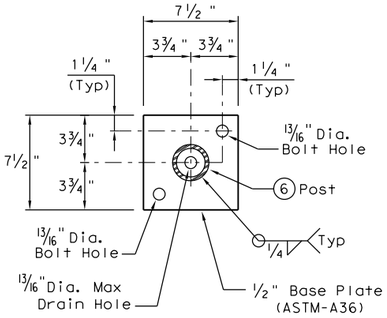

TYPICAL POST BASE PLATE DETAIL

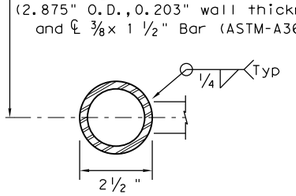

SECTION K-K

POST MOUNT DETAILS

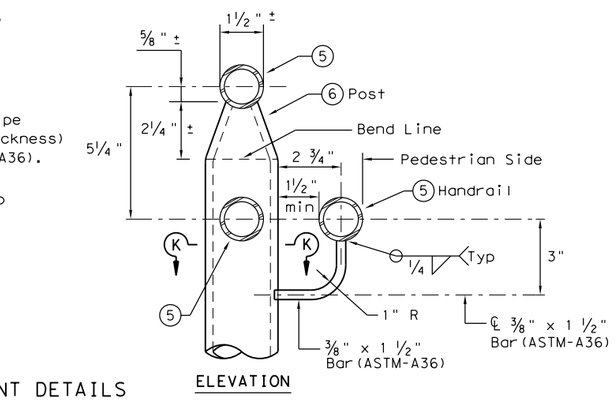

ELEVATION

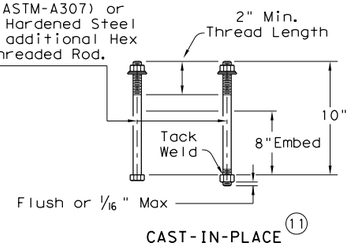

CAST-IN-PLACE ANCHOR BOLT OPTIONS
(Used for Post Base Plate only)

Texas Department of Transportation

Design Division Standard

PEDESTRIAN HANDRAIL DETAILS

PRD-13

FILE: prd13.dgn	DN: TxDOT	CK: AM	DW: JTR	CK: CGL
©TxDOT December 2006	CONT	SECT	JOB	HIGHWAY
REVISIONS	0337	01	053	SH 29
REVISED MAY, 2013 (VP)	DIST	COUNTY		SHEET NO.
	AUS	WILLIAMSON		113

DISCLAIMER:
THE USE OF THIS STANDARD IS GOVERNED BY THE "TEXAS ENGINEERING PRACTICE ACT". NO WARRANTY OF ANY KIND IS MADE BY TXDOT FOR ANY PURPOSE WHATSOEVER. TXDOT ASSUMES NO RESPONSIBILITY FOR THE CONVERSION OF THIS STANDARD TO OTHER FORMATS OR FOR INCORRECT RESULTS OR DAMAGES RESULTING FROM ITS USE.

DATE:
FILE:

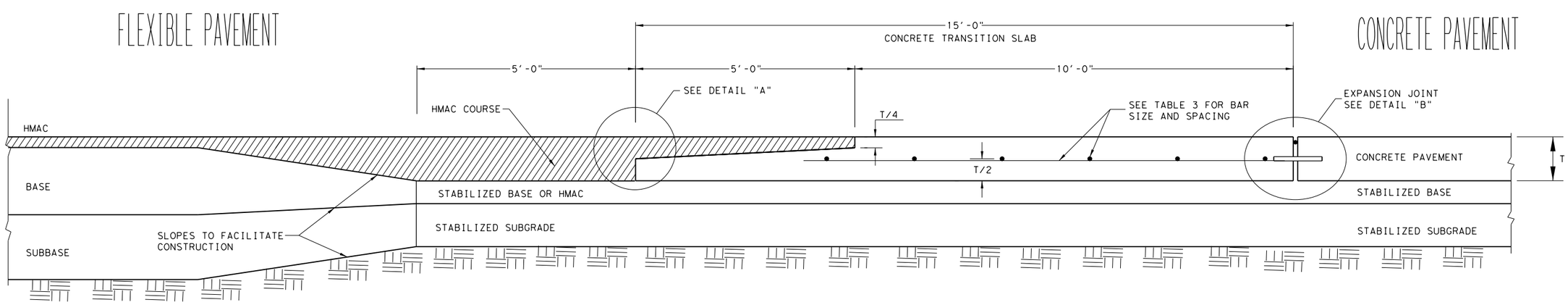

TYPICAL JUNCTION OF CONCRETE PAVEMENT WITH FLEXIBLE PAVEMENT

(NOT TO SCALE)

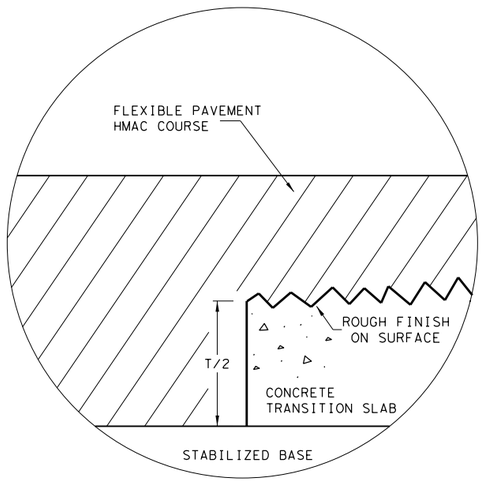

DETAIL "A"

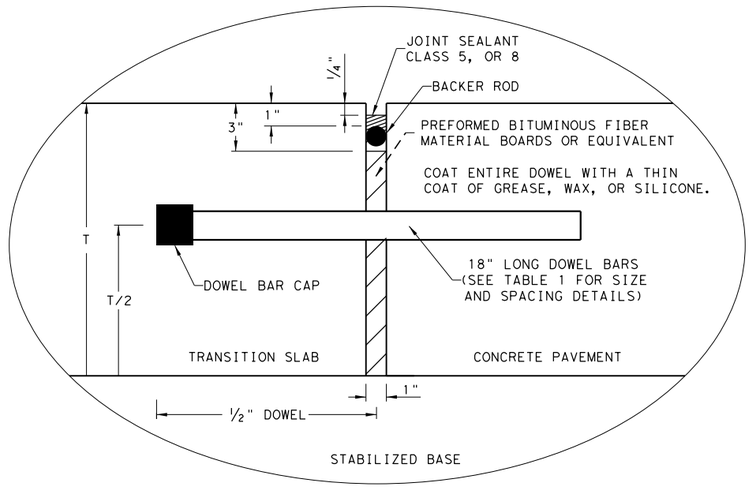

DETAIL "B"

GENERAL NOTES

1. FOR FURTHER INFORMATION REGARDING THE PLACEMENT OF CONCRETE AND LOAD TRANSFER DEVICES REFER TO THE GOVERNING SPECIFICATIONS FOR "CONCRETE PAVEMENT" AND "REINFORCING STEEL."
2. DETAILS FOR PAVEMENT WIDTH AND THE CROWN CROSS-SLOPE SHALL BE SHOWN ELSEWHERE IN THE PLANS.
3. MATCH THE LONGITUDINAL JOINTS OF THE CONCRETE TRANSITION SLAB WITH ADJOINING CONCRETE PAVEMENT. PROVIDE EQUIVALENT TIEBARS OR TRANSVERSE BARS AT THESE LONGITUDINAL JOINTS, SEE TABLE NO. 2.
4. REFER TO DMS-6310, "JOINT SEALANTS AND FILLERS" FOR THE CLASSIFICATIONS.
5. TRANSITION SLABS WILL BE PAID UNDER ITEM 360, "CONCRETE PAVEMENTS."

TABLE NO.1 DOWELS (SMOOTH BARS)

SLAB THICKNESS T (IN.)	BAR DIA. AND LENGTH	SPACING (IN.)
7 TO 7.5	1" X 18"	12
8 TO 10	1 1/4" X 18"	12
10 TO 13	1 1/2" X 18"	12

TABLE NO.2 TIE BARS (DEFORMED BARS)

SLAB THICKNESS T (IN.)	BAR SIZE	SPACING (IN.)
7 TO 7.5	#5	24
8 TO 13	#6	24

TABLE NO.3 TRANSITION SLAB STEEL (DEFORMED BARS)

SLAB THICKNESS T (IN.)	BAR SIZE	SPACING (IN.) TRANSVERSE DIRECTION	SPACING (IN.) LONGITUDINAL DIRECTION
7 TO 7.5	#5	24	12
8 TO 13	#6	24	12

ADJUST SPACING OF LONGITUDINAL BARS AS NEEDED TO ACCOMDATE DOWEL BAR SPACING.

Texas Department of Transportation

Design Division Standard

CONCRETE PAVEMENT DETAILS TRANSITION SLAB

T-7 to 13 INCHES

TRANS-20

FILE: transitslab20.dgn	DN: TxDOT	DN: TxDOT	DW: AN	CK: KM
©TxDOT: NOVEMBER 2020	CONT	SECT	JOB	HIGHWAY
REVISIONS	0337	01	053	SH 29
	DIST	COUNTY		SHEET NO.
	AUS	WILLIAMSON		114

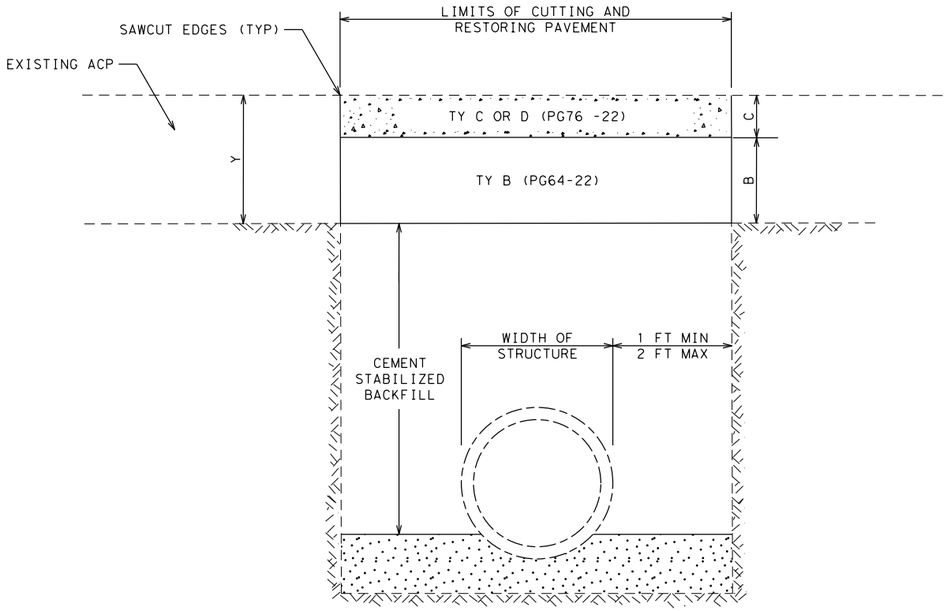

CUTTING AND RESTORING PAVEMENT DETAIL

CUT AND RESTORE NOTES

Y = DEPTH OF EXISTING ACP (IN)
Y = C + B
C = MIN 2 IN AND MAX 4 IN THICKNESS
CUTTING AND RESTORING PAVEMENT PER ITEM 400
HMA MAY BE BLADE LAID
ALL ACP PER ITEM 3076
THE FOLLOWING WORK IS SUBSIDIARY:
-CEMENT STABILIZED BACKFILL
-SAWCUT EDGES
-TACK ALL ACP SURFACES IN CUT AND RESTORE

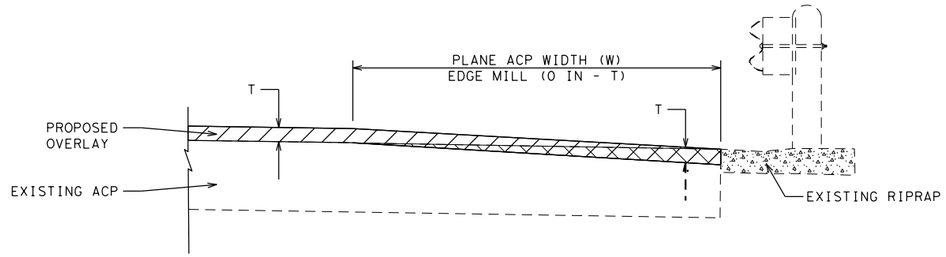

MOWSTRIP OR RIPRAP EDGE MILL DETAIL

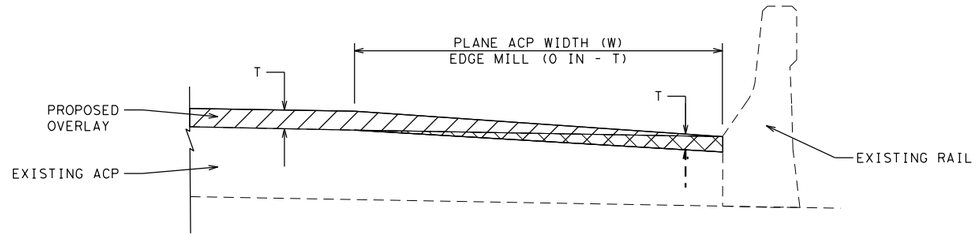

RAIL EDGE MILL DETAIL

CURB EDGE MILL DETAIL

EDGE REPAIR NOTES

T = OVERLAY/INLAY THICKNESS (IN)
W = FULL LANE WIDTH OR MINIMUM 10 FT

NOT TO SCALE

Texas Department of Transportation | Austin District Standard

FLEXIBLE PAVEMENT DETAILS

FLEXPAVE(2)-22 (AUS)

©TxDOT 2017

CONT	SECT	JOB	HIGHWAY
0337	01	053	SH 29
DIST	COUNTY		SHEET NO.
AUS	WILLIAMSON		115

DATE: 12/18/2025 2:05:13 PM
FILE: pw://kh-pw.bentley.com:kh-pw-01/Documents/01 Active Projects/TX-GEO-069284005 - SH 29 Widening/4 - Design/Plan Set/3. Roadway/STANDARDS/flexpave-22.dgn

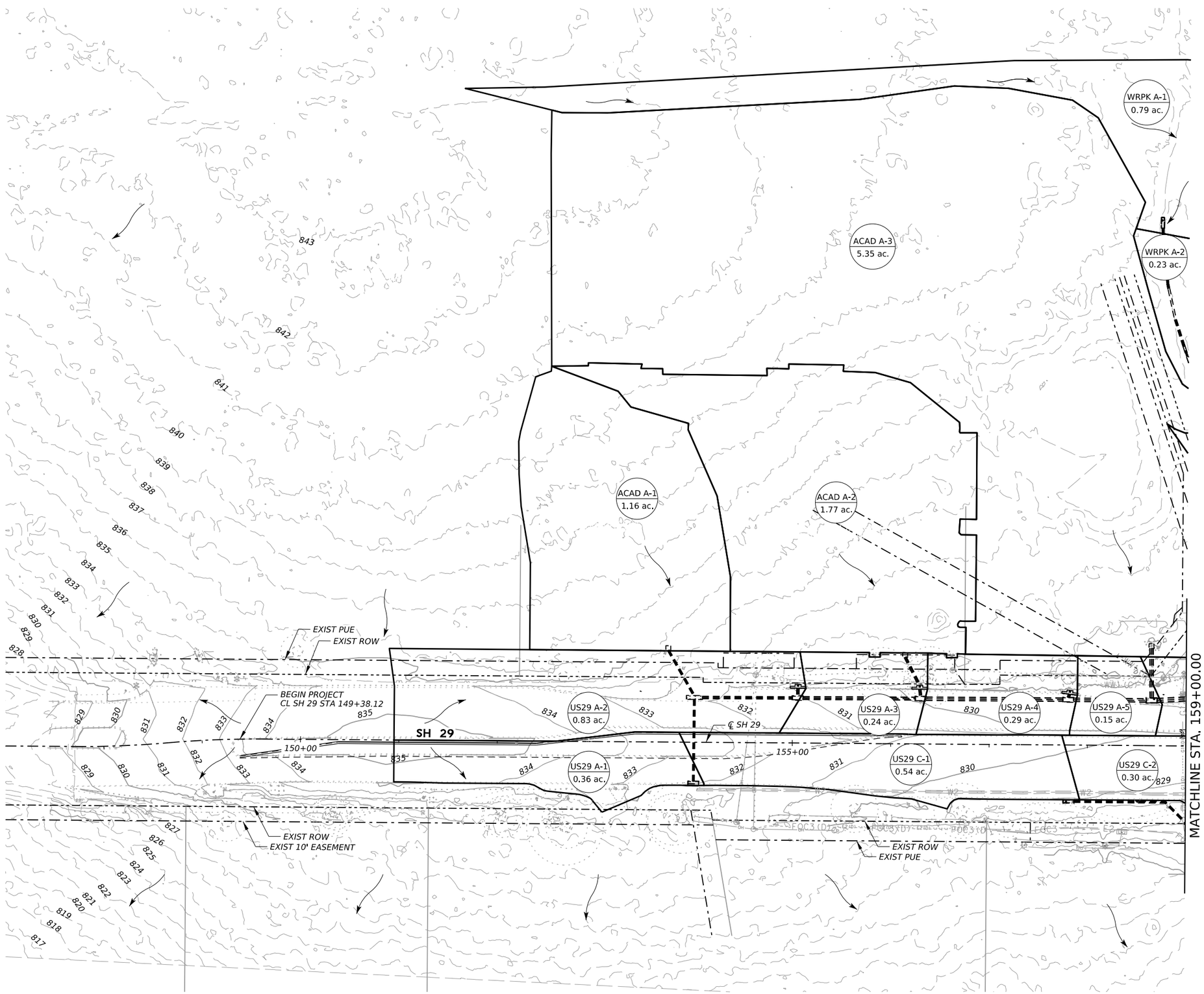

LEGEND

- EXIST PROPERTY LINE
- EXIST ROW
- EXIST PUBLIC UTILITY EASEMENT
- PROP ROW
- TEMP CONSTRUCTION EASEMENT
- PROP PUBLIC UTILITY EASEMENT
- EXISTING CONTOURS
- PROP CONTOURS
- XXXX / XXXX — AREA ID
- FLOW DIRECTION

NOTES:

1. SEE RUNOFF COMPUTATION SHEETS FOR DRAINAGE AREA CALCULATIONS.
2. EXISTING CONTOURS SHOWN ARE FROM WILLIAMSON COUNTY 2017 LIDAR
3. THERE IS NO FEMA FLOODPLAIN LOCATED WITHIN THE PROJECT LIMITS.
4. SEE ACADEMY PLANS PRODUCED BY PAPE-DAWSON ENGINEERS DATED 2/27/2019 AND APPROVED BY THE CITY OF GEORGETOWN ON 5/1/2019 FOR ADDITIONAL INFORMATION.

0' 50' 100' HORZ

STATE OF TEXAS
MICHAEL CURL
126986
LICENSED PROFESSIONAL ENGINEER

9/24/2025

GEORGETOWN TEXAS
more than welcome

THE ESTES GROUP
TBPE FIRM REG. NO. F-20926

Texas Department of Transportation

SH 29

DRAINAGE AREAS BEGIN TO STA 159+00

SHEET 1 OF 3

CONT	SECT	JOB	HIGHWAY
0337	01	053	SH 29
DIST	COUNTY		SHEET NO.
AUS	WILLIAMSON		116

DATE: 9/24/2025 10:33:35 AM
FILE: pw://kh-pw.bentley.com:kh-pw-01/Documents/01 Active Projects/TX-GEO-069284005 - SH 29 Widening/4 - Design/Plan Set/5. Drainage/DRN AREA/SH29_DRN_AREA - 1.dgn

DW: CC: DW: CK:

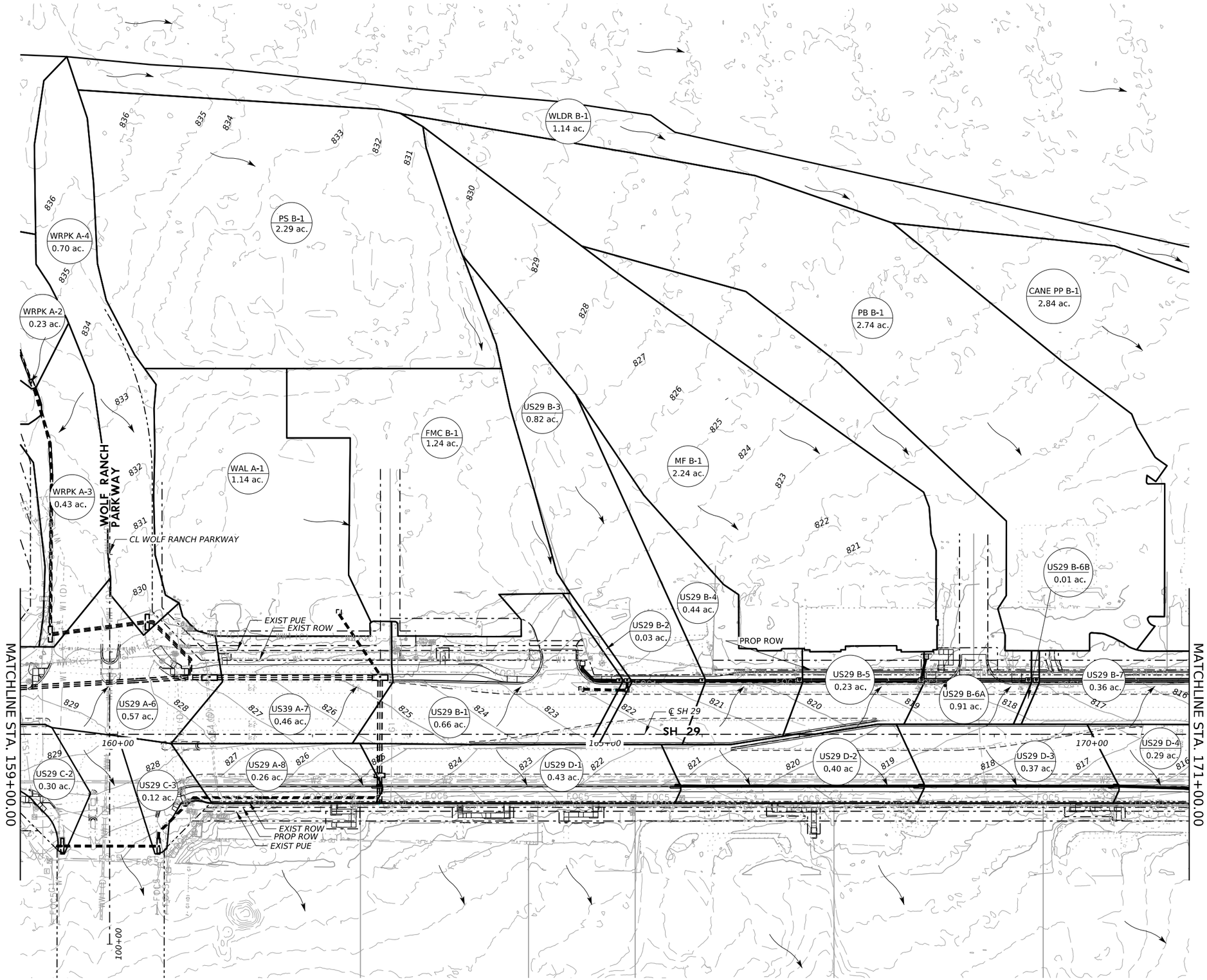

LEGEND

- EXIST PROPERTY LINE
- EXIST ROW
- EXIST PUBLIC UTILITY EASEMENT
- PROP ROW
- TEMP CONSTRUCTION EASEMENT
- PROP PUBLIC UTILITY EASEMENT
- EXISTING CONTOURS
- PROP CONTOURS
- XXXX / XXXX — AREA ID
- FLOW DIRECTION

NOTES:

1. SEE RUNOFF COMPUTATION SHEETS FOR DRAINAGE AREA CALCULATIONS.
2. EXISTING CONTOURS SHOWN ARE FROM WILLIAMSON COUNTY 2017 LIDAR
3. THERE IS NO FEMA FLOODPLAIN LOCATED WITHIN THE PROJECT LIMITS.

0' 50' 100' HORZ

STATE OF TEXAS
MICHAEL CURL
126986
LICENSED PROFESSIONAL ENGINEER

Michael Curl

9/24/2025

GEORGETOWN TEXAS
more than welcome

TEG
THE ESTES GROUP
TBPE FIRM REG. NO. F-20926

Texas Department of Transportation

SH 29

DRAINAGE AREAS
STA 159+00 TO STA 171+00

SHEET 2 OF 3

CONT	SECT	JOB	HIGHWAY
0337	01	053	SH 29
DIST	COUNTY		SHEET NO.
AUS	WILLIAMSON		117

DATE: 9/24/2025 10:33:58 AM
FILE: pw://kh-pw.bentley.com:kh-pw-01/Documents/01 Active Projects/TX-GEO-069284005 - SH 29 Widening/4 - Design/Plan Set/5. Drainage/DRN AREA/SH29_DRN_AREA - 2.dgn

DW: CK: DW: CK:

DW: | CK: | DW: | CK:

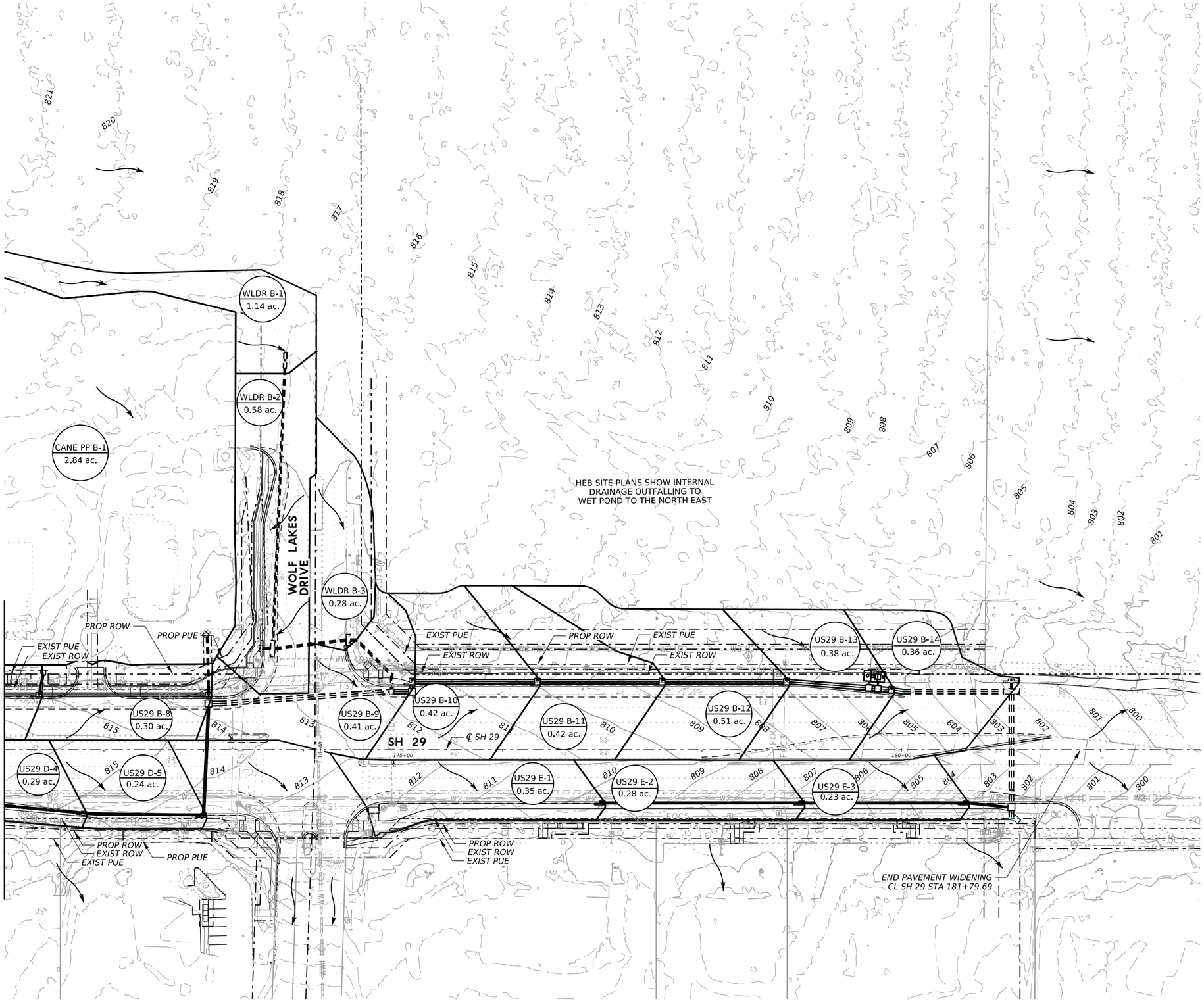

LEGEND

- EXIST PROPERTY LINE
- EXIST ROW
- EXIST PUBLIC UTILITY EASEMENT
- PROP ROW
- TEMP CONSTRUCTION EASEMENT
- PROP PUBLIC UTILITY EASEMENT
- EXISTING CONTOURS
- PROP CONTOURS
- XXXX / XXXX — AREA ID
- FLOW DIRECTION

NOTES:

1. SEE RUNOFF COMPUTATION SHEETS FOR DRAINAGE AREA CALCULATIONS.
2. EXISTING CONTOURS SHOWN ARE FROM WILLIAMSON COUNTY 2017 LIDAR
3. THERE IS NO FEMA FLOODPLAIN LOCATED WITHIN THE PROJECT LIMITS.

0' 50' 100' HORZ

STATE OF TEXAS
MICHAEL CURL
126986
LICENSED PROFESSIONAL ENGINEER

Michael Curl

9/24/2025

GEORGETOWN TEXAS
more than welcome

TEG
THE ESTES GROUP
TBPE FIRM REG. NO. F-20926

Texas Department of Transportation

SH 29

DRAINAGE AREAS
STA 171+00 TO END

SHEET 3 OF 3

CONT	SECT	JOB	HIGHWAY
0337	01	053	SH 29
DIST	COUNTY		SHEET NO.
AUS	WILLIAMSON		118

DATE: 9/24/2025 10:34:21 AM
FILE: pw://kh-pw.bentley.com:kh-pw-01/Documents/01 Active Projects/TX-GEO-069284005 - SH 29 Widening/4 - Design/Plan Set/5. Drainage/DRN AREA/SH29_DRN_AREA - 3.dgn

RATIONAL METHOD 10 YEAR PROPOSED DRAINAGE AREAS & RUNOFF COMPUTATIONS					
AREA ID	AREA (acres)	C-VALUE	TIME OF CONCENTRATION USED	Intensity (10-yr) (in/h)	DISCHARGE Q (10-yr) (cfs)
System A					
US29 A-1	0.36	0.93	10	7.254	2.46
US29 A-2	0.83	0.66	10	7.254	4.02
US29 A-3	0.24	0.67	10	7.254	1.19
US29 A-4	0.29	0.65	10	7.254	1.37
US29 A-5	0.15	0.61	10	7.254	0.66
US29 A-6	0.57	0.78	10	7.254	3.23
US29 A-7	0.46	0.70	10	7.254	2.35
US29 A-8	0.26	0.81	10	7.254	1.57
ACAD A-1	1.16	0.70	10	7.254	5.92
ACAD A-2	1.77	0.70	10	7.254	9.08
ACAD A-3	5.35	0.70	10	7.254	27.38
WRPK A-1	0.79	0.49	10	7.254	2.81
WRPK A-2	0.23	0.72	10	7.254	1.23
WRPK A-3	0.43	0.86	10	7.254	2.71
WRPK A-4	0.70	0.81	10	7.254	4.13
WAL A-1	1.14	0.85	10	7.254	7.05
System B					
US29 B-1	0.66	0.77	10	7.254	3.69
US29 B-2	0.03	0.78	10	7.254	0.18
US29 B-3	0.82	0.43	10	7.254	2.56
US29 B-4	0.44	0.55	10	7.254	1.75
US29 B-5	0.23	0.70	10	7.254	1.19
US29 B-6A	0.91	0.49	10	7.254	3.27
US29 B-6B	0.01	0.37	10	7.254	0.04
US29 B-7	0.35	0.69	10	7.254	1.75
US29 B-8	0.30	0.76	10	7.254	1.67
US29 B-9	0.41	0.74	10	7.254	2.24
US29 B-10	0.42	0.61	10	7.254	1.89
US29 B-11	0.42	0.61	10	7.254	1.89
US29 B-12	0.51	0.54	10	7.254	2.01
US29 B-13	0.38	0.59	10	7.254	1.64
US29 B-14	0.36	0.69	10	7.254	1.83
FMC B-1	1.24	0.74	10	7.254	6.72
PS B-1	2.29	0.50	10	7.254	8.37
MF B-1	2.24	0.34	10	7.254	5.58
PB B-1	2.74	0.37	10	7.254	7.44
CANE PP B-1	2.84	0.56	10	7.254	11.71
WLDR B-1	1.14	0.34	10	7.254	2.83
WLDR B-2	0.58	0.70	10	7.254	2.94
WLDR B-3	0.28	0.60	10	7.254	1.24
System C					
US29 C-1	0.54	0.93	10	7.254	3.68
US29 C-2	0.30	0.92	10	7.254	2.03
US29 C-3	0.12	0.83	10	7.254	0.74
System D					
US29 D-1	0.43	0.85	10	7.254	2.68
US29 D-2	0.40	0.86	10	7.254	2.5
US29 D-3	0.37	0.87	10	7.254	2.36
US29 D-4	0.29	0.88	10	7.254	1.86
US29 D-5	0.24	0.91	10	7.254	1.62
System E					
US29 E-1	0.35	0.84	10	7.254	2.15
US29 E-2	0.28	0.85	10	7.254	1.75
US29 E-3	0.23	0.85	10	7.254	1.45

RATIONAL METHOD 100 YEAR PROPOSED DRAINAGE AREAS & RUNOFF COMPUTATIONS					
AREA ID	AREA (acres)	C-VALUE	TIME OF CONCENTRATION USED	Intensity (100-yr) (in/h)	DISCHARGE Q (100-yr) (cfs)
System A					
US29 A-1	0.36	0.93	10	11.23	3.8
US29 A-2	0.83	0.66	10	11.23	6.22
US29 A-3	0.24	0.67	10	11.23	1.84
US29 A-4	0.29	0.65	10	11.23	2.12
US29 A-5	0.15	0.61	10	11.23	1.02
US29 A-6	0.57	0.78	10	11.23	5
US29 A-7	0.46	0.70	10	11.23	3.64
US29 A-8	0.26	0.81	10	11.23	2.43
ACAD A-1	1.16	0.70	10	11.23	9.17
ACAD A-2	1.77	0.70	10	11.23	14.05
ACAD A-3	5.35	0.70	10	11.23	42.39
WRPK A-1	0.79	0.49	10	11.23	4.35
WRPK A-2	0.23	0.72	10	11.23	1.9
WRPK A-3	0.43	0.86	10	11.23	4.19
WRPK A-4	0.70	0.81	10	11.23	6.39
WAL A-1	1.14	0.85	10	11.23	10.92
System B					
US29 B-1	0.66	0.77	10	11.23	5.72
US29 B-2	0.03	0.78	10	11.23	0.27
US29 B-3	0.82	0.43	10	11.23	3.96
US29 B-4	0.44	0.55	10	11.23	2.71
US29 B-5	0.23	0.70	10	11.23	1.85
US29 B-6A	0.91	0.49	10	11.23	5.06
US29 B-6B	0.01	0.37	10	11.23	0.06
US29 B-7	0.35	0.69	10	11.23	2.71
US29 B-8	0.30	0.76	10	11.23	2.58
US29 B-9	0.41	0.74	10	11.23	3.47
US29 B-10	0.42	0.61	10	11.23	2.93
US29 B-11	0.42	0.61	10	11.23	2.92
US29 B-12	0.51	0.54	10	11.23	3.11
US29 B-13	0.38	0.59	10	11.23	2.54
US29 B-14	0.36	0.69	10	11.23	2.84
FMC B-1	1.24	0.74	10	11.23	10.41
PS B-1	2.29	0.50	10	11.23	12.96
MF B-1	2.24	0.34	10	11.23	8.64
PB B-1	2.74	0.37	10	11.23	11.52
CANE PP B-1	2.84	0.56	10	11.23	18.12
WLDR B-1	1.14	0.34	10	11.23	4.38
WLDR B-2	0.58	0.70	10	11.23	4.54
WLDR B-3	0.28	0.60	10	11.23	1.92
System C					
US29 C-1	0.54	0.93	10	11.23	5.7
US29 C-2	0.30	0.92	10	11.23	3.14
US29 C-3	0.12	0.83	10	11.23	1.14
System D					
US29 D-1	0.43	0.85	10	11.23	4.14
US29 D-2	0.40	0.86	10	11.23	3.87
US29 D-3	0.37	0.87	10	11.23	3.66
US29 D-4	0.29	0.88	10	11.23	2.87
US29 D-5	0.24	0.91	10	11.23	2.51
System E					
US29 E-1	0.35	0.84	10	11.23	3.33
US29 E-2	0.28	0.85	10	11.23	2.71
US29 E-3	0.23	0.85	10	11.23	2.25

NOTES:

1. PEAK FLOWS WERE CALCULATED USING THE RATIONAL METHOD.
2. STORM FREQUENCY BASED ON THE INTERPOLATED NOAA ATLAS 14 POINT PRECIPITATION FREQUENCY ESTIMATES.

STATE OF TEXAS
MICHAEL CURL
126986
LICENSED
PROFESSIONAL ENGINEER

9/24/2025

GEORGETOWN
TEXAS
more than welcome

THE ESTES GROUP
TBPE FIRM REG. NO. F-20926

Texas Department of Transportation

SH 29

HYDROLOGIC DATA

SHEET 1 OF 1

CONT	SECT	JOB	HIGHWAY
0337	01	053	SH 29
DIST	COUNTY		SHEET NO.
AUS	WILLIAMSON		119

CK:
DW:
CC:
DW:

DATE: 9/24/2025 10:34:38 AM
FILE: pw://kh-pw.bentley.com:kh-pw-01/Documents/01 Active Projects/TX-GEO-069284005 - SH 29 Widening/4 - Design/Plan Set/5. Drainage/DRN Calc/SH29 DRN-AREA01.dgn

10 - YEAR ON GRADE AND SAG CONFIGURATION DATA														
Node ID	Baseline Feature	Baseline Station (ft)	Baseline Offset (ft)	Inlet Type	Inlet Profile Type (Inlet Location)	Total Inlet Discharge (Total Rational Flow to Inlet) (cfs)	Inlet Capacity (Flow Captured) (cfs)	Inlet Bypass Flow (Bypassed Rational Flow) (cfs)	Bypass to Node (Bypass Target)	Inlet Allowable Ponded Width (Maximum Spread) (ft)	Inlet Computed Ponded Width (Spread / Top Width) (ft)	Inlet Allowable Ponded Depth (Max. Gutter Depth - Design) (in)	Inlet Computed Ponded Depth (Depth Gutter) (in)	Curb Opening Length (ft)
System A														
CI 50 (TY IIR) (10') EX	BL CL-SH29	154+00	41.93	CI (TY IR) (10)	On Grade	2.46	2.3	0.15	CI-55 (TY_II) (10') EX	13.5	9.31	6	2.2	9.2
CI-20 (TY_II) (10') EX	BL CL-SH29	158+65	-43.28	CI (TY II) (10)_42IN	On Grade	0.66	0.66	0	CI-40 (TY_II) (15') EX	13.5	5.81	6	1.4	9.2
CI-40 (TY_II) (15') EX	BL CL-SH29	160+94	-55.24	CI (TY II) (15)_48IN	On Grade	3.41	3.39	0.02	CI-45 (TY_II) (15') EX	13.5	9.95	6	2.4	14.2
CI-45 (TY_II) (15') EX	BL CL-SH29	162+69	-55.23	CI (TY II) (15)_48IN	On Grade	2.37	2.37	0	PCO US29 B-1	13.5	8.74	6	2.1	14.2
PCU US29 A-8	BL CL-SH29	162+69	53.5	PCU_3ft_LT/RT	On Grade	1.57	1.44	0.13	PCU US29 D-1	13.5	7.71	6	1.9	9
D-4 EX	BL CL-SH29	155+05	-55.63	PCO_3ft_Both	On Grade	4.02	3.5	0.52	D-2 EX	13.5	9.86	6	2.4	14
D-2 EX	BL CL-SH29	156+29	-55.63	PCO_3ft_Both	On Grade	1.71	1.71	0	D-3 EX	13.5	8.15	6	2.0	14
D-3 EX	BL CL-SH29	157+82	-51.66	PCO_3ft_Both	On Grade	1.37	1.37	0	CI-20 (TY_II) (10') EX	13.5	9.41	6	2.3	14
CI-30 (TY II) (10') EX	N/A	N/A	N/A	CI (TY II) (10)_18IN	On Grade	2.81	2.42	0.39	CI-30A (TY II) (15') EX	13.5	9.11	6	2.2	9.2
CI-30A (TY II) (15') EX	N/A	N/A	N/A	CI (TY II) (10)_24IN	On Grade	1.61	1.59	0.02	CI-25 (TY II) (15') EX	13.5	7.39	6	1.8	9.2
CI-25 (TY II) (15') EX	BL CL-WRP	103+18	-58.67	CI (TY II) (15)_30IN	On Grade	2.73	2.73	0	CI-40 (TY_II) (15') EX	13.5	9	6	2.2	14.2
CI-35 (TY II) (15) EX	BL CL-WRP	103+31	36.34	CI (TY II) (15)_30IN	On Grade	4.13	3.95	0.18	CI-40 (TY_II) (15') EX	13.5	10.52	6	2.5	14.2
System B														
PCO US29 B-1	BL CL-SH29	165+15	-53	PCO_3ft_LT/RT	On Grade	3.69	2.86	0.84	PCO US29 B-2	13.5	10.81	6	2.6	9.5
PCO US29 B-2	BL CL-SH29	165+23	-53	PCO_3ft_None	On Grade	1.01	0.82	0.19	PCO US29 B-3	13.5	6.58	6	1.6	5
PCO US29 B-3	BL CL-SH29	166+00	-53	PCO_3ft_LT/RT	On Grade	2.75	2.54	0.21	PCO US29 B-4	13.5	10.82	6	2.6	9.5
PCO US29 B-4	BL CL-SH29	167+00	-53	PCO_4ft_LT/RT	On Grade	1.96	1.79	0.17	PCO US29 B-5	13.5	8	6	1.9	9.5
PCO US29 B-5	BL CL-SH29	168+25	-53	PCO_4ft_LT/RT	On Grade	1.36	1.36	0	PCO US29 B-6A	13.5	7.45	6	1.8	9.5
PCO US29 B-6A	BL CL-SH29	169+35	-53	PCO_4ft_LT/RT	On Grade	3.27	2.6	0.67	PCO US29 B-6B	13.5	10.11	6	2.4	9.5
PCO US29 B-6B	BL CL-SH29	169+43	-53	PCO_4ft_None	On Grade	0.71	0.71	0	PCO US29 B-7	13.5	10.9	6	2.6	5
PCO US29 B-7	BL CL-SH29	171+35	-53	PCO_4ft_LT/RT	On Grade	1.75	1.63	0.11	PCO US29 B-8	13.5	7.56	6	1.8	9.5
PCO US29 B-8	BL CL-SH29	173+05	-53	PCO_4ft_LT/RT	On Grade	1.78	1.55	0.23	PCO US29 B-9	13.5	6.83	6	1.6	9.5
PCO US29 B-9	BL CL-SH29	175+09	-65	PCO_6ft_LT/RT	On Grade	2.48	2.31	0.16	PCO US29 B-10	13.5	10.11	6	2.4	9.5
PCO US29 B-10	BL CL-SH29	176+35	-65	PCO_6ft_LT/RT	On Grade	2.05	2.03	0.02	PCO US29 B-11	13.5	9.91	6	2.4	9.5
PCO US29 B-11	BL CL-SH29	177+60	-65	PCO_6ft_LT/RT	On Grade	1.91	1.79	0.13	PCO US29 B-12	13.5	8.14	6	2.0	9.5
PCO US29 B-12	BL CL-SH29	178+85	-65	PCO_6ft_LT/RT	On Grade	2.13	1.86	0.28	PCO US29 B-13	13.5	7.96	6	1.9	9.5
PCO US29 B-13	BL CL-SH29	179+90	-56.84	PCO_6ft_LT/RT	On Grade	1.92	1.68	0.23	PCO US29 B-14 EX	13.5	7.37	6	1.8	9.5
PCO US29 B-14 EX	BL CL-SH29	181+10	-67.25	PCO_3ft_Both	On Grade	2.07	2.06	0	<None>	13.5	7.54	6	1.8	14
CI-110 (TY II) (15') EX	BL CL-WLD1	13+91	-29.07	CI (TY II) (15)_18IN	On Grade	2.83	2.83	0	PCO WLDR B-2	13.5	9.59	6	2.3	14.2
CI-115 (TY II) (15') EX	BL CL-WLD1	11+10	30.79	CI (TY II) (10)_36IN	On Grade	1.24	1.24	0	PCO US29 B-9	13.5	6.7	6	1.6	9.2
PCO WLDR B-2	BL CL-WLD1	11+02	-52.5	PCO_3ft_Both	In Sag	2.94	2.94	0	<None>	13.5	8.48	6	5.0	14
System C														
CI-55 (TY_II) (10') EX	BL CL-SH29	157+81	55.55	CI (TY II) (10)_18IN	On Grade	3.84	3.43	0.41	CI-60 (TY_II) (15') EX	13.5	12.57	6	3.0	9.2
CI-60 (TY_II) (15') EX	BL CL-WRP	101+00.72	-46.96	CI (TY II) (15)_18IN	On Grade	2.43	2.38	0.06	<None>	13.5	7.01	6	1.7	14.2
CI-65 (TY_II) (15') EX	BL CL-WRP	101+00.62	48.37	CI (TY II) (15)_18IN	On Grade	0.74	0.74	0	<None>	13.5	4.4	6	1.1	14.2
System D														
PCU US29 D-1	BL CL-SH29	165+75	53.5	PCU_3ft_LT/RT	On Grade	2.81	2.49	0.31	PCU US29 D-2	13.5	11.18	6	2.7	9
PCU US29 D-2	BL CL-SH29	168+25	53.5	PCU_3ft_LT/RT	On Grade	2.81	2.35	0.46	PCU US29 D-3	13.5	9.83	6	2.4	9
PCU US29 D-3	BL CL-SH29	170+25	53.5	PCU_3ft_LT/RT	On Grade	2.82	2.38	0.45	PCU US29 D-4	13.5	9.98	6	2.4	9
PCU US29 D-4	BL CL-SH29	171+80	63.81	PCU_3ft_LT/RT	On Grade	2.3	1.96	0.34	PCU US29 D-5	13.5	8.7	6	2.1	9
PCU US29 D-5	BL CL-SH29	173+00	65.5	PCU_3ft_LT/RT	On Grade	1.97	1.83	0.14	<None>	13.5	9.65	6	2.3	9
System E														
PCU US29 E-1	BL CL-SH29	177+00	53.5	PCU_3ft_LT/RT	On Grade	2.15	1.89	0.26	PCU US29 E-2	13.5	8.91	6	2.1	9
PCU US29 E-2	BL CL-SH29	179+00	53.5	PCU_3ft_LT/RT	On Grade	2.01	1.71	0.3	PCU US29 E-3	13.5	7.74	6	1.9	9
PCU US29 E-3	BL CL-SH29	180+65	53.5	PCU_3ft_LT/RT	On Grade	1.75	1.5	0.24	<None>	13.5	7	6	1.7	9

NOTES:

1. ANALYSIS WAS PERFORMED USING THE CURRENT VERSION OF OPENROADS DRAINAGE AND UTILITIES WHICH PERFORMS CALCULATIONS IN ACCORDANCE WITH FHWA HEC-22.
2. ALLOWABLE PONDED WIDTHS ARE IN ACCORDANCE WITH THE TXDOT MANUAL (2019) AND DO NOT EXCEED CURB HEIGHT.

STATE OF TEXAS
MICHAEL CURL
126986
LICENSED
PROFESSIONAL ENGINEER

9/24/2025

GEORGETOWN
TEXAS
more than welcome

THE ESTES GROUP
TBPE FIRM REG. NO. F-20926

Texas Department of Transportation

SH 29

HYDRAULIC DATA
10-YR INLETS

SHEET 1 OF 1

CONT	SECT	JOB	HIGHWAY
0337	01	053	SH 29
DIST	COUNTY		SHEET NO.
AUS	WILLIAMSON		120

CK:
DW:
CK:
DW:

DATE: 9/24/2025 10:34:53 AM
FILE: pw://kh-pw.bentley.com:kh-pw-01/Documents/01 Active Projects/TX-GEO-069284005 - SH 29 Widening/4 - Design/Plan Set/5. Drainage/DRN Calc/SH29 DRN-INLETS01.dgn

100 - YEAR ON GRADE AND SAG CONFIGURATION DATA														
Node ID	Baseline Feature	Baseline Station (ft)	Baseline Offset (ft)	Inlet Type	Inlet Profile Type (Inlet Location)	Total Inlet Discharge (Total Rational Flow to Inlet) (cfs)	Inlet Capacity (Flow Captured) (cfs)	Inlet Bypass Flow (Bypassed Rational Flow) (cfs)	Bypass to Node (Bypass Target)	Inlet Allowable Ponded Width (Maximum Spread) (ft)	Inlet Computed Ponded Width (Spread / Top Width) (ft)	Inlet Allowable Ponded Depth (Max. Gutter Depth - Design) (in)	Inlet Computed Ponded Depth (Depth Gutter) (in)	Curb Opening Length (ft)
System A														
CI 50 (TY IIR) (10') EX	BL CL-SH29	154+00	41.93	CI (TY IR) (10)	On Grade	3.8	3.11	0.69	CI-55 (TY_II) (10') EX	13.5	10.96	6	2.6	9.2
CI-20 (TY_II) (10') EX	BL CL-SH29	158+65	-43.28	CI (TY II) (10)_42IN	On Grade	1.02	1.02	0	CI-40 (TY_II) (15') EX	13.5	6.84	6	1.6	9.2
CI-40 (TY_II) (15') EX	BL CL-SH29	160+94	-55.24	CI (TY II) (15)_48IN	On Grade	6.34	5.43	0.92	CI-45 (TY_II) (15') EX	13.5	12.57	6	3.0	14.2
CI-45 (TY_II) (15') EX	BL CL-SH29	162+69	-55.23	CI (TY II) (15)_48IN	On Grade	4.55	4.31	0.25	PCO US29 B-1	13.5	11.16	6	2.7	14.2
PCU US29 A-8	BL CL-SH29	162+69	53.5	PCU_3ft_LT/RT	On Grade	2.43	2.07	0.36	PCU US29 D-1	13.5	9.09	6	2.2	9
D-4 EX	BL CL-SH29	155+05	-55.63	PCO_3ft_Both	On Grade	6.22	4.63	1.59	D-2 EX	13.5	11.62	6	2.8	14
D-2 EX	BL CL-SH29	156+29	-55.63	PCO_3ft_Both	On Grade	3.43	3.34	0.09	D-3 EX	13.5	10.59	6	2.5	14
D-3 EX	BL CL-SH29	157+82	-51.66	PCO_3ft_Both	On Grade	2.21	2.21	0	CI-20 (TY_II) (10') EX	13.5	11.25	6	2.7	14
CI-30 (TY II) (10') EX	N/A	N/A	N/A	CI (TY II) (10)_18IN	On Grade	4.35	3.19	1.16	CI-30A (TY II) (15') EX	13.5	10.73	6	2.6	9.2
CI-30A (TY II) (15') EX	N/A	N/A	N/A	CI (TY II) (10)_24IN	On Grade	3.06	2.56	0.5	CI-25 (TY II) (15') EX	13.5	9.4	6	2.3	9.2
CI-25 (TY II) (15') EX	BL CL-WRP	103+18	-58.67	CI (TY II) (15)_30IN	On Grade	4.69	4.35	0.34	CI-40 (TY_II) (15') EX	13.5	11.03	6	2.6	14.2
CI-35 (TY II) (15) EX	BL CL-WRP	103+31	36.34	CI (TY II) (15)_30IN	On Grade	6.39	5.39	1	CI-40 (TY_II) (15') EX	13.5	12.39	6	3.0	14.2
System B														
PCO US29 B-1	BL CL-SH29	165+15	-53	PCO_3ft_LT/RT	On Grade	5.96	3.79	2.18	PCO US29 B-2	13.5	12.94	6	3.1	9.5
PCO US29 B-2	BL CL-SH29	165+23	-53	PCO_3ft_None	On Grade	2.45	1.37	1.08	PCO US29 B-3	13.5	9.16	6	2.2	5
PCO US29 B-3	BL CL-SH29	166+00	-53	PCO_3ft_LT/RT	On Grade	5.03	3.79	1.24	PCO US29 B-4	13.5	13.57	6	3.3	9.5
PCO US29 B-4	BL CL-SH29	167+00	-53	PCO_4ft_LT/RT	On Grade	3.95	2.82	1.14	PCO US29 B-5	13.5	10.4	6	2.5	9.5
PCO US29 B-5	BL CL-SH29	168+25	-53	PCO_4ft_LT/RT	On Grade	2.98	2.5	0.49	PCO US29 B-6A	13.5	9.99	6	2.4	9.5
PCO US29 B-6A	BL CL-SH29	169+35	-53	PCO_4ft_LT/RT	On Grade	5.55	3.56	1.99	PCO US29 B-6B	13.5	12.33	6	3.0	9.5
PCO US29 B-6B	BL CL-SH29	169+43	-53	PCO_4ft_None	On Grade	2.05	2.01	0.04	PCO US29 B-7	13.5	16.24	6	3.9	5
PCO US29 B-7	BL CL-SH29	171+35	-53	PCO_4ft_LT/RT	On Grade	2.75	2.23	0.52	PCO US29 B-8	13.5	8.96	6	2.1	9.5
PCO US29 B-8	BL CL-SH29	173+05	-53	PCO_4ft_LT/RT	On Grade	3.1	2.19	0.91	PCO US29 B-9	13.5	8.4	6	2.0	9.5
PCO US29 B-9	BL CL-SH29	175+09	-65	PCO_6ft_LT/RT	On Grade	4.46	3.43	1.02	PCO US29 B-10	13.5	12.6	6	3.0	9.5
PCO US29 B-10	BL CL-SH29	176+35	-65	PCO_6ft_LT/RT	On Grade	3.95	3.31	0.64	PCO US29 B-11	13.5	12.66	6	3.0	9.5
PCO US29 B-11	BL CL-SH29	177+60	-65	PCO_6ft_LT/RT	On Grade	3.57	2.71	0.85	PCO US29 B-12	13.5	10.29	6	2.5	9.5
PCO US29 B-12	BL CL-SH29	178+85	-65	PCO_6ft_LT/RT	On Grade	3.96	2.73	1.23	PCO US29 B-13	13.5	10.04	6	2.4	9.5
PCO US29 B-13	BL CL-SH29	179+90	-56.84	PCO_6ft_LT/RT	On Grade	3.77	2.57	1.2	PCO US29 B-14 EX	13.5	9.5	6	2.3	9.5
PCO US29 B-14 EX	BL CL-SH29	181+10	-67.25	PCO_3ft_Both	On Grade	4.04	3.46	0.58	<None>	13.5	9.69	6	2.3	14
CI-110 (TY II) (15') EX	BL CL-WLD1	13+91	-29.07	CI (TY II) (15)_18IN	On Grade	4.38	4.23	0.15	PCO WLDR B-2	13.5	11.3	6	2.7	14.2
CI-115 (TY II) (15') EX	BL CL-WLD1	11+10	30.79	CI (TY II) (10)_36IN	On Grade	1.92	1.84	0.08	PCO US29 B-9	13.5	7.9	6	1.9	9.2
PCO WLDR B-2	BL CL-WLD1	11+02	-52.5	PCO_3ft_Both	In Sag	4.69	4.69	0	<None>	13.5	11.6	6	5.8	14
System C														
CI-55 (TY_II) (10') EX	BL CL-SH29	157+81	55.55	CI (TY II) (10)_18IN	On Grade	6.4	4.77	1.63	CI-60 (TY_II) (15') EX	13.5	15.23	6	3.7	9.2
CI-60 (TY_II) (15') EX	BL CL-WRP	101+00.72	-46.96	CI (TY II) (15)_18IN	On Grade	4.77	3.83	0.94	<None>	13.5	9.02	6	2.2	14.2
CI-65 (TY_II) (15') EX	BL CL-WRP	101+00.62	48.37	CI (TY II) (15)_18IN	On Grade	1.14	1.14	0	<None>	13.5	5.18	6	1.2	14.2
System D														
PCU US29 D-1	BL CL-SH29	165+75	53.5	PCU_3ft_LT/RT	On Grade	4.5	3.68	0.82	PCU US29 D-2	13.5	13.34	6	3.2	9
PCU US29 D-2	BL CL-SH29	168+25	53.5	PCU_3ft_LT/RT	On Grade	4.69	3.5	1.19	PCU US29 D-3	13.5	11.9	6	2.9	9
PCU US29 D-3	BL CL-SH29	170+25	53.5	PCU_3ft_LT/RT	On Grade	4.84	3.62	1.22	PCU US29 D-4	13.5	12.22	6	2.9	9
PCU US29 D-4	BL CL-SH29	171+80	63.81	PCU_3ft_LT/RT	On Grade	4.09	3.07	1.02	PCU US29 D-5	13.5	10.8	6	2.6	9
PCU US29 D-5	BL CL-SH29	173+00	65.5	PCU_3ft_LT/RT	On Grade	3.54	3	0.53	<None>	13.5	12.03	6	2.9	9
System E														
PCU US29 E-1	BL CL-SH29	177+00	53.5	PCU_3ft_LT/RT	On Grade	3.33	2.69	0.63	PCU US29 E-2	13.5	10.5	6	2.5	9
PCU US29 E-2	BL CL-SH29	179+00	53.5	PCU_3ft_LT/RT	On Grade	3.34	2.54	0.8	PCU US29 E-3	13.5	9.37	6	2.2	9
PCU US29 E-3	BL CL-SH29	180+65	53.5	PCU_3ft_LT/RT	On Grade	3.05	2.32	0.73	<None>	13.5	8.63	6	2.1	9

NOTES:

1. ANALYSIS WAS PERFORMED USING THE CURRENT VERSION OF OPENROADS DRAINAGE AND UTILITIES WHICH PERFORMS CALCULATIONS IN ACCORDANCE WITH FHWA HEC-22.
2. ALLOWABLE PONDED WIDTHS ARE IN ACCORDANCE WITH THE TXDOT MANUAL (2019) AND DO NOT EXCEED CURB HEIGHT.

STATE OF TEXAS
MICHAEL CURL
126986
LICENSED
PROFESSIONAL ENGINEER

Michael Curl

9/24/2025

GEORGETOWN
TEXAS
more than welcome

THE ESTES GROUP
TBPE FIRM REG. NO. F-20926

Texas Department of Transportation

SH 29

HYDRAULIC DATA
100-YR INLETS

SHEET 1 OF 1

CONT	SECT	JOB	HIGHWAY
0337	01	053	SH 29
DIST	COUNTY		SHEET NO.
AUS	WILLIAMSON		121

CK: DW: CK: DW:

DATE: 9/24/2025 10:35:08 AM
FILE: pw://kh-pw.bentley.com:kh-pw-01/Documents/01 Active Projects/TX-GEO-069284005 - SH 29 Widening/4 - Design/Plan Set/5. Drainage/DRN Calc/SH29 DRN-INLETS02.dgn

10 - YEAR CONVEYANCE CONFIGURATION DATA																	
Pipe ID	Upstream Node (Start)	Downstream Node (Stop)	Conduit Description	Diameter (in)	Length (Construction) (ft)	Length (Quantified) (ft)	Discharge (Flow) (cfs)	Capacity (Full Flow)	Velocity (ft/s)	Slope (Construction) (%)	Upstream Invert (Start)	Downstream Invert (Stop) (ft)	HGL Upstream (ft)	HGL Downstream (ft)	Normal Depth (in)	Critical Depth (in)	Slope (Calculated) (%)
System A																	
CI-50 EX	CI 50 (TY IIR) (10') EX	CI-1 (TY_II) (15') EX	RCP	18	83.9	84	2.3	11.23	5	1.19	828.7	827.7	829.28	828.45	5.53	6.88	1.14
CI-1 EX	CI-1 (TY_II) (15') EX	CI-5 (TY_II) (10') EX	RCP	24	92.0	92	8.14	22.08	6.5	1.09	827.2	826.2	828.22	827.04	10.09	12.19	0.95
CI-5 EX	CI-5 (TY_II) (10') EX	CI-10 (TY II) (10') EX	RCP	30	114.5	115	11.5	36.68	6.61	0.87	825.7	824.7	826.84	825.86	11.54	13.64	0.80
CI-10 EX	CI-10 (TY II) (10') EX	CI-15 (TY_II) (10') EX	RCP	36	139.5	140	21.83	38.51	5.62	0.36	824.2	823.7	825.82	825.2	19.41	18.03	0.33
CI-15 EX	CI-15 (TY_II) (10') EX	CI-20 (TY_II) (10') EX	RCP	36	74.3	74	22.82	56.09	7.53	0.81	823.6	823	825.14	824.8	15.99	18.46	0.71
CI-20 EX	CI-20 (TY_II) (10') EX	JB A-1 EX	RCP	42	202.7	203	49.32	85.04	9.17	0.74	822.5	821	824.7	822.91	22.96	26.33	0.71
JB A-1 EX	JB A-1 EX	CI-40 (TY_II) (15') EX	RCP	48	10.1	10	58.74	96.83	8.07	0.90	820.5	820.41	822.81	822.67	26.98	27.7	0.45
CI-40 EX	CI-40 (TY_II) (15') EX	CI-45 (TY_II) (15') EX	RCP	48	159.5	160	61.83	92.12	7.86	0.45	818.72	818	821.21	821.02	28.78	28.45	0.41
CI-45 EX	CI-45 (TY_II) (15') EX	CI-70 (TY_IIR) (10') EX	RCP	48	95.7	96	69.82	90.74	7.96	0.42	817.9	817.5	820.53	820.03	31.58	30.31	0.40
CI-70A EX	CI-70 (TY_IIR) (10') EX	PCO US29 A-8	RCP	48	7.8	8	69.36	112.74	9.43	0.89	810.91	810.84	814.9	814.88	27.22	30.2	0.62
CI-70B EX	PCO US29 A-8	JB A-1A EX	RCP	48	8.3	8	70.63	61.65	5.62	0.26	810.82	810.8	814.85	814.82	(N/A)	30.49	0.18
JB A-1A EX	JB A-1A EX	OUT-A	RCP	48	4.2	4	76.56	99.51	8.73	0.71	810.8	810.77	814.79	814.77	31.58	31.79	0.48
ACAD A-1 EX	ACAD A-1 EX	CI-1 (TY_II) (15') EX	RCP	18	53.7	54	5.92	10.43	6.09	1.04	828.26	827.7	829.2	828.51	9.71	11.28	0.99
D-4 EX	D-4 EX	CI-5 (TY_II) (10') EX	RCP	24	8.6	9	3.5	28.9	6.22	2.25	825.89	825.7	827.05	827.06	5.64	7.86	1.63
ACAD A-2 EX	ACAD A-2	D-2 EX	RCP	24	32.9	33	9.08	45.5	11.3	4.43	826.16	824.7	827.24	825.92	7.27	12.91	4.05
D-2 EX	D-2 EX	CI-10 (TY II) (10') EX	RCP	24	8.2	8	10.76	30.39	8.84	2.58	824.52	824.31	825.82	825.93	9.86	14.11	1.80
D-3 EX	D-3 EX	CI-15 (TY_II) (10') EX	RCP	24	4.3	4	1.37	19.91	3.63	1.39	823.88	823.82	825.17	825.17	4.27	4.86	0.77
ACAD A-3 EX	ACAD A-3 EX	CI-20 (TY_II) (10') EX	RCP	36	50.9	51	27.38	45.78	6.76	0.51	824.87	824.61	826.56	826.28	20.06	20.3	0.47
CI-30 EX	CI-30 (TY II) (10') EX	CI-30A (TY II) (15') EX	RCP	18	167.9	168	2.42	13.62	5.82	1.79	833	830	833.59	830.43	5.14	7.07	1.68
CI-30A EX	CI-30A (TY II) (15') EX	CI-25 (TY II) (15') EX	RCP	18	245.8	246	3.95	13.85	6.76	1.83	829.5	825	830.26	825.55	6.58	9.12	1.74
CI-25 EX	CI-25 (TY II) (15') EX	CI-35 (TY II) (15) EX	RCP	18	96.8	97	6.48	14.83	8.12	2.07	824	822	824.99	823.32	8.32	11.82	1.99
CI-35 EX	CI-35 (TY II) (15) EX	JB A-1 EX	RCP	30	74.7	75	10.21	31.07	5.67	0.60	821.95	821.5	823.28	823.3	11.84	12.82	0.57
WAL A-1	PJB WAL A-1	CI-45 (TY_II) (15') EX	RCP	18	75.6	76	7.05	26.14	12.56	6.50	822.82	817.9	823.85	820.88	6.39	12.34	6.19
System B																	
FMC B-1A EX	PJB FMC B-1 EX	EX_CMP_T2	RCP	18	33.8	34	6.72	13.7	7.72	1.80	818.8	818.19	819.81	819.21	8.9	12.04	1.70
FMC B-1B	EX_CMP_T2	PJB FMC B-1	RCP	18	9.69	10	6.72	27.35	12.81	7.84	818.19	817.43	819.2	818.79	6.08	12.04	6.78
FMC B-1C	PJB FMC B-1	PCO US29 B-2	RCP	18	6.66	7	6.72	18.51	9.65	4.51	817.3	817	818.59	818.6	7.5	12.04	3.11
US29 B-2	PCO US29 B-2	PCO US29 B-3	RCP	24	72	72	18.77	21.57	7.73	0.97	816.5	815.8	818.06	817.45	17.32	18.72	0.91
US29 B-3	PCO US29 B-3	PCO US29 B-4	RCP	24	95	95	21.31	21.46	7.79	0.95	815.7	814.8	817.35	816.43	19.52	19.83	0.90
US29 B-4	PCO US29 B-4	PCO US29 B-5	RCP	30	120	120	23.1	32.81	7.24	0.67	814.3	813.5	815.94	815.05	18.56	19.63	0.64
US29 B-5	PCO US29 B-5	PCO US29 B-6A	RCP	36	105	105	30.05	72.5	9.78	1.24	813	811.7	814.78	813.51	16.15	21.31	1.18
US29 B-6A	PCO US29 B-6A	PCO US29 B-6B	RCP	36	3	3	32.65	74.57	10.2	3.33	811.6	811.5	813.46	813.15	16.67	22.26	1.25
US29 B-6B	PCO US29 B-6B	PCO US29 B-7	RCP	36	187	187	33.35	60.88	8.81	0.86	811.4	809.8	813.28	811.79	19.01	22.5	0.83
US29 B-7	PCO US29 B-7	PCO US29 B-8	RCP	36	165	165	42.43	64.7	9.76	0.97	809.6	808	811.72	809.77	21.26	25.47	0.94
US29 B-8	PCO US29 B-8	PJB-US29 D	RCP	36	4.04	4	55.68	70.16	11.01	2.48	806.6	806.5	809.02	808.75	24.22	29.05	1.11
US29 D-A	PJB-US29 D	EX_CMP_T3	RCP	48	8.52	9	66.69	103.57	8.75	0.70	805	804.94	807.47	807.45	28.02	29.6	0.52
US29 D-B	EX_CMP_T3	JB B-2 EX	RCP	48	170.52	171	66.69	110.44	9.2	0.60	804.94	803.92	807.41	807.3	26.9	29.6	0.59
JB B-2 EX	JB B-2 EX	PJB B-2	RCP	48	15.54	16	73.69	107.14	9.19	0.74	803.92	803.81	807.23	807.21	29.25	31.17	0.56
PJB B-2	PJB B-2	PCO US29 B-9	RCP	48	4.08	4	73.69	101.14	8.78	1.22	803.55	803.5	806.73	806.72	30.4	31.17	0.50
US29 B-9	PCO US29 B-9	PCO US29 B-10	RCP	48	120.82	121	76	99.19	8.7	0.50	803.4	802.8	806.04	805.45	31.49	31.67	0.48
US29 B-10	PCO US29 B-10	PCO US29 B-11	RCP	48	120	120	78.04	99.51	8.77	0.50	802.7	802.1	805.38	804.77	32.01	32.11	0.48
US29 B-11	PCO US29 B-11	PCO US29 B-12	RCP	48	120	120	79.82	90.84	8.15	0.42	801	800.5	803.9	803.21	34.9	32.48	0.40
US29 B-12A	PCO US29 B-12	SWAQ110_BYPASS	RCP	48	77.26	77	81.68	119.11	10.21	0.78	798.7	798.1	801.44	800.97	29.19	32.86	0.69
US29 B-12B	SWAQ110_BYPASS	PCO US29 B-13	RCP	48	8.3	8	81.68	106.17	9.32	1.20	798.1	798	800.84	800.66	31.58	32.86	0.55
US29 B-13A	PCO US29 B-13	EX_CMP_T4	RCP	48	10.06	10	83.36	137.82	11.49	1.15	796.8	796.69	799.57	799.54	26.93	33.2	0.92
US29 B-13A EX	EX_CMP_T4	CI-130 (TY II) (15') EX	RCP	48	100.01	100	83.36	114.43	9.93	0.68	796.69	796	799.45	799.53	30.4	33.2	0.63
US29 B-14 EX	PCO US29 B-14 EX	CI-130 (TY II) (15') EX	RCP	18	6.65	7	2.06	23.44	8.17	7.98	798.53	798	799.07	798.85	3.61	6.5	4.98
CI-130 EX	CI-130 (TY II) (15') EX	MH B-5 EX	RCP	48	96.56	97	85.42	110.67	9.72	0.62	795.9	795.3	798.7	797.94	31.64	33.62	0.59
MH B-5 EX-A	MH B-5 EX	PJB-US29 E	RCP	48	10.05	10	85.42	98.17	6.8	0.70	789.64	789.57	793.66	793.6	34.63	33.62	0.47
MH B-5 EX-B	PJB-US29 E	OUT-B	RCP	48	8.34	8	90.53	107.48	9.59	0.76	789.55	789.48	793.52	793.48	33.76	34.62	0.56
PS B-1	PJB PS B-1	PCO US29 B-1	RCP	24	44.07	44	8.37	29.03	7.99	1.82	818	817.2	819.03	818.35	8.82	12.37	1.65
US29 B-1	PCO US29 B-1	PCO US29 B-2	RCP	24	3	3	11.23	25.29	7.81	3.33	817.1	817	818.3	818.06	11.2	14.43	1.25
MF B-1	MF B-1 EX	PCO US29 B-5	RCP	18	20.74	21	5.58	5.18	3.16	0.29	814.36	814.3	815.45	815.21	(N/A)	10.94	0.24
PB B-1	PB B-1 EX	PCO US29 B-7	RCP	18	18.53	19	7.44	19.07	10.12	3.99	811.84	811.1	812.9	812.32	7.81	12.68	3.30
CANE PP B-1 EX	CANE PP B-1 EX	EX_CMP_T	RCP	18	48.54	49	11.71	11.1	7.1	1.15	810.85	810.29	812.17	811.64	15.86	15.63	1.12
CANE PP B-1	EX_CMP_T	PCO US29 B-8	RCP	18	8	8	11.71	25.56	14.15	7.40	810.29	809.7	811.6	810.64	8.55	15.63	5.92
CI-110 EX	CI-110 (TY II) (15') EX	CI-105 (TY II) (15') EX	RCP	18	274.15	274	2.83	10.69	5.11	1.09	812	809	812.64	809.53	6.32	7.66	1.04
CI-105 EX	CI-105 (TY II) (15') EX	CI-115 (TY II) (15') EX	RCP	24	72.62	73	5.76	28.9	7.18	1.72	808.5	807.25	809.35	808.15	7.27	10.18	1.63
CI-115 EX	CI-115 (TY II) (15') EX	JB B-2 EX	RCP	24	70.5	71	7.01	39.14	9.43	3.16	807.15	804.92	808.09	807.67	6.87	11.27	2.99
WLDR B-2	PCO WLDR B-2	CI-105 (TY II) (15') EX	RC Arch Pipe	DES 3	8.22	8	2.94	15.4	4.03	0.97	808.7	808.62	809.43	809.43	4.67	5.34	0.68
System C																	
CI-55 EX	CI-55 (TY_II) (10') EX	CI-60 (TY_II) (15') EX	RCP	18	179.2	179	3.43	13.35	6.33	1.67	824.5	821.5	825.21	822.52	6.22	8.48	1.62
CI-60 EX	CI-60 (TY_II) (15') EX	CI-65 (TY_II) (15') EX	RCP	18	96.32	96	5.71	6.68	4.25	0.42	821.4	821	822.47	821.92	12.8	11.07	0.40
CI-65 EX	CI-65 (TY_II) (15') EX	JB A-1A EX	RCP	18	245.78	246	6.35	18.53	9.5	3.23	820	812.05	820.98	815.2	7.27	11.69	3.11
System D																	
US29 D-1	PCU US29 D-1	PCU US29 D-2	RCP	18	245	245	2.49	10.44	4.84	1.01	815.57	813.1	816.17	813.89	5.99	7.17	0.99
US29 D-2	PCU US29 D-2	PCU US29 D-3	RCP	18	195	195	4.84	9.99	5.61	0.93	813.01	811.2	813.86	812.19	8.83	10.15	0.91
US29 D-3	PCU US29 D-3	PCU US29 D-4	RCP	18	150.45	150	7.22	10.61	6.46	1.05	811.09	809.5	812.13	810.83	10.89	12.49	1.02
US29 D-4	PCU US29 D-4	PCU US29 D-5	RCP	18	114.99	115	9.18	8.48	5.2	0.68	809.38	808.6	810.75	809.77	(N/A)	14.06	0.65
US29 D-5	PCU US29 D-5	PJB-US29 D	RCP	24	107.33	107	11.01	14.22	5	0.41	808.04	807.6	809.36	808.79	15.86	14.28	0.40
System E																	
US29 E-1	PCU US29 E-1	PCU US29 E-2	RCP	18	195	195	1.89	12.63	5.14	1.48	804.4	801.5	804.91	802.17	4.71	6.22	1.45
US29 E-2	PCU US29 E-2	PCU US29 E-3	RCP	18	160	160	3.6	15.13	7.02	2.14	801.42	798	802.15	798.82	5.98	8.69	2.07
US29 E-3	PCU US29 E-3	PJB-US29 E	RCP	18	40.22	40	5.11	9.77	5.59	0.98	797.9	797.5	798.77	798.27	9.24	10.44	0.87

NOTES:

1. ANALYSIS WAS PERFORMED USING THE CURRENT VERSION OF OPENROADS DRAINAGE AND UTILITIES WHICH PERFORMS CALCULATIONS IN ACCORDANCE WITH FHWA HEC-22

STATE OF TEXAS
MICHAEL CURL
126986
LICENSED PROFESSIONAL ENGINEER
Michael Curl
9/24/2025

GEORGETOWN TEXAS
more than welcome

THE ESTES GROUP
TBPE FIRM REG. NO. F-20926

Texas Department of Transportation

SH 29

HYDRAULIC DATA
10-YR STORM SEWER

SHEET 1 OF 1

CONT	SECT	JOB	HIGHWAY
0337	01	053	SH 29
DIST	COUNTY		SHEET NO.
AUS	WILLIAMSON		122

CK: DW: CK: DW:

DATE: 9/24/2025 10:35:24 AM
FILE: pw://kh-pw.bentley.com:kh-pw-01/Documents/01 Active Projects/TX-GEO-0692840005 - SH 29 Widening/4 - Design/Plan Set/5. Drainage/DRN Calc/SH29 DRN-LINK01.dgn

100 - YEAR CONVEYANCE CONFIGURATION DATA																	
Pipe ID	Upstream Node (Start)	Downstream Node (Stop)	Conduit Description	Diameter (in)	Length (Construction) (ft)	Length (Quantified) (ft)	Discharge (Flow) (cfs)	Capacity (Full Flow)	Velocity (ft/s)	Slope (Construction) (%)	Upstream Invert (Start)	Downstream Invert (Stop) (ft)	HGL Upstream (ft)	HGL Downstream (ft)	Normal Depth (in)	Critical Depth (in)	Slope (Calculated) (%)
System A																	
CI-50 EX	CI 50 (TY IIR) (10') EX	CI-1 (TY_II) (15') EX	RCP	18	83.9	84	3.11	11.23	5.44	1.19	828.7	827.7	829.37	828.8	6.47	8.05	1.14
CI-1 EX	CI-1 (TY_II) (15') EX	CI-5 (TY_II) (10') EX	RCP	24	92.0	92	12.18	22.08	7.2	1.09	827.2	826.2	828.46	827.26	12.72	15.05	0.95
CI-5 EX	CI-5 (TY_II) (10') EX	CI-10 (TY II) (10') EX	RCP	30	114.5	115	16.64	36.68	7.29	0.87	825.7	824.7	827.08	826.4	14.17	16.55	0.80
CI-10 EX	CI-10 (TY II) (10') EX	CI-15 (TY_II) (10') EX	RCP	36	139.5	140	33.47	38.51	6.14	0.36	824.2	823.7	826.34	825.62	25.95	22.55	0.33
CI-15 EX	CI-15 (TY_II) (10') EX	CI-20 (TY_II) (10') EX	RCP	36	74.3	74	35.2	56.09	8.38	0.81	823.6	823	825.53	825.42	20.67	23.14	0.71
CI-20 EX	CI-20 (TY_II) (10') EX	JB A-1 EX	RCP	42	202.7	203	76.68	85.04	10	0.74	822.5	821	825.24	823.6	31.2	32.88	0.71
JB A-1 EX	JB A-1 EX	CI-40 (TY_II) (15') EX	RCP	48	10.1	10	90.61	96.83	8.76	0.90	820.5	820.41	823.5	823.3	36.83	34.64	0.45
CI-40 EX	CI-40 (TY_II) (15') EX	CI-45 (TY_II) (15') EX	RCP	48	159.5	160	95.66	92.12	7.61	0.45	818.72	818	823.07	822.3	41.24	35.58	0.41
CI-45 EX	CI-45 (TY_II) (15') EX	CI-70 (TY_IIR) (10') EX	RCP	48	95.7	96	108.9	90.74	8.67	0.42	817.9	817.5	821.54	820.66	(N/A)	37.88	0.40
CI-70A EX	CI-70 (TY_IIR) (10') EX	PCO US29 A-8	RCP	48	7.8	8	108.3	112.74	8.62	0.89	810.91	810.84	815.1	815.03	37.75	37.77	0.62
CI-70B EX	PCO US29 A-8	JB A-1A EX	RCP	48	8.3	8	110.17	61.65	8.77	0.26	810.82	810.8	814.96	814.89	(N/A)	38.08	0.18
JB A-1A EX	JB A-1A EX	OUT-A	RCP	48	4.2	4	119.17	99.51	9.48	0.71	810.8	810.77	814.81	814.77	(N/A)	39.46	0.48
ACAD A-1 EX	ACAD A-1 EX	CI-1 (TY_II) (15') EX	RCP	18	53.7	54	9.17	10.43	6.66	1.04	828.26	827.7	829.43	828.79	13.09	14.05	0.99
D-4 EX	D-4 EX	CI-5 (TY_II) (10') EX	RCP	24	8.6	9	4.63	28.9	6.74	2.25	825.89	825.7	827.39	827.4	6.49	9.07	1.63
ACAD A-2 EX	ACAD A-2	D-2 EX	RCP	24	32.9	33	14.05	45.5	12.76	4.43	826.16	824.7	827.51	826.74	9.16	16.21	4.05
D-2 EX	D-2 EX	CI-10 (TY II) (10') EX	RCP	24	8.2	8	17.37	30.39	5.53	2.58	824.52	824.31	826.57	826.5	13	18.03	1.80
D-3 EX	D-3 EX	CI-15 (TY_II) (10') EX	RCP	24	4.3	4	2.21	19.91	4.18	1.39	823.88	823.82	825.57	825.57	5.4	6.2	0.77
ACAD A-3 EX	ACAD A-3 EX	CI-20 (TY_II) (10') EX	RCP	36	50.9	51	42.39	45.78	7.35	0.51	824.87	824.61	827.13	826.73	27.37	25.46	0.47
CI-30 EX	CI-30 (TY II) (10') EX	CI-30A (TY II) (15') EX	RCP	18	167.9	168	3.19	13.62	6.29	1.79	833	830	833.68	830.5	5.92	8.16	1.68
CI-30A EX	CI-30A (TY II) (15') EX	CI-25 (TY II) (15') EX	RCP	18	245.8	246	5.67	13.85	7.45	1.83	829.5	825	830.42	825.67	8.02	11.03	1.74
CI-25 EX	CI-25 (TY II) (15') EX	CI-35 (TY II) (15) EX	RCP	18	96.8	97	9.79	14.83	8.97	2.07	824	822	825.21	824.38	10.67	14.49	1.99
CI-35 EX	CI-35 (TY II) (15) EX	JB A-1 EX	RCP	30	74.7	75	14.93	31.07	6.27	0.60	821.95	821.5	824.34	824.25	14.65	15.63	0.57
WAL A-1	PJB WAL A-1	CI-45 (TY_II) (15') EX	RCP	18	75.6	76	10.92	26.14	14.12	6.50	822.82	817.9	824.08	822.09	8.11	15.19	6.19
System B																	
FMC B-1A EX	PJB FMC B-1 EX	EX_CMP_T2	RCP	18	33.8	34	10.41	13.7	5.89	1.80	818.8	818.19	821.06	820.71	11.73	14.89	1.70
FMC B-1B	EX_CMP_T2	PJB FMC B-1	RCP	18	9.69	10	10.41	27.35	5.89	7.84	818.19	817.43	820.67	820.56	7.7	14.89	6.78
FMC B-1C	PJB FMC B-1	PCO US29 B-2	RCP	18	6.66	7	10.41	18.51	5.89	4.51	817.3	817	821.42	821.33	9.65	14.89	3.11
US29 B-2	PCO US29 B-2	PCO US29 B-3	RCP	24	72	72	28.53	21.57	9.08	0.97	816.5	815.8	821.68	820.45	(N/A)	22.06	0.91
US29 B-3	PCO US29 B-3	PCO US29 B-4	RCP	24	95	95	32.32	21.46	10.29	0.95	815.7	814.8	820.15	818.11	(N/A)	22.72	0.90
US29 B-4	PCO US29 B-4	PCO US29 B-5	RCP	30	120	120	35.13	32.81	7.16	0.67	814.3	813.5	818.01	817.09	27.35	24.16	0.64
US29 B-5	PCO US29 B-5	PCO US29 B-6A	RCP	36	105	105	46.27	72.5	6.55	1.24	813	811.7	817.02	816.49	20.9	26.59	1.18
US29 B-6A	PCO US29 B-6A	PCO US29 B-6B	RCP	36	3	3	49.83	74.57	7.05	3.33	811.6	811.5	816.41	816.36	21.53	27.58	1.25
US29 B-6B	PCO US29 B-6B	PCO US29 B-7	RCP	36	187	187	51.84	60.88	7.33	0.86	811.4	809.8	816.27	815.11	25.53	28.1	0.83
US29 B-7	PCO US29 B-7	PCO US29 B-8	RCP	36	165	165	65.59	64.7	9.28	0.97	809.6	808	815.03	813.38	29.97	31.13	0.94
US29 B-8	PCO US29 B-8	PJB-US29 D	RCP	36	4.04	4	85.9	70.16	12.15	2.48	806.6	806.5	811.65	811.5	(N/A)	33.83	1.11
US29 D-A	PJB-US29 D	EX_CMP_T3	RCP	48	8.52	9	102.78	103.57	8.18	0.70	805	804.94	810.76	810.7	39.02	36.85	0.52
US29 D-B	EX_CMP_T3	JB B-2 EX	RCP	48	170.52	171	102.78	110.44	8.18	0.60	804.94	803.92	810.64	809.75	36.65	36.85	0.59
JB B-2 EX	JB B-2 EX	PJB B-2	RCP	48	15.54	16	113.55	107.14	9.04	0.74	803.92	803.81	809.76	809.64	42.67	38.61	0.56
PJB B-2	PJB B-2	PCO US29 B-9	RCP	48	4.08	4	113.55	101.14	9.04	1.22	803.55	803.5	808.54	808.48	(N/A)	38.61	0.50
US29 B-9	PCO US29 B-9	PCO US29 B-10	RCP	48	120.82	121	116.98	99.19	9.31	0.50	803.4	802.8	807.46	806.65	(N/A)	39.14	0.48
US29 B-10	PCO US29 B-10	PCO US29 B-11	RCP	48	120	120	120.29	99.51	9.57	0.50	802.7	802.1	806.54	805.4	(N/A)	39.62	0.48
US29 B-11	PCO US29 B-11	PCO US29 B-12	RCP	48	120	120	123	90.84	9.79	0.42	801	800.5	805.06	803.84	(N/A)	40.01	0.40
US29 B-12A	PCO US29 B-12	SWAQ110_BYPASS	RCP	48	77.26	77	125.73	119.11	10.01	0.78	798.7	798.1	803.45	802.78	42.34	40.38	0.69
US29 B-12B	SWAQ110_BYPASS	PCO US29 B-13	RCP	48	8.3	8	125.73	106.17	10.01	1.20	798.1	798	802.55	802.41	(N/A)	40.38	0.55
US29 B-13A	PCO US29 B-13	EX_CMP_T4	RCP	48	10.06	10	128.3	137.82	10.21	1.15	796.8	796.69	802.18	802.08	36.66	40.72	0.92
US29 B-13A EX	EX_CMP_T4	CI-130 (TY II) (15') EX	RCP	48	100.01	100	128.3	114.43	10.21	0.68	796.69	796	801.91	801.05	(N/A)	40.72	0.63
US29 B-14 EX	PCO US29 B-14 EX	CI-130 (TY II) (15') EX	RCP	18	6.65	7	3.46	23.44	1.96	7.98	798.53	798	800.04	800.03	4.68	8.52	4.98
CI-130 EX	CI-130 (TY II) (15') EX	MH B-5 EX	RCP	48	96.56	97	131.76	110.67	10.49	0.62	795.9	795.3	799.79	798.73	(N/A)	41.16	0.59
MH B-5 EX-A	MH B-5 EX	PJB-US29 E	RCP	48	10.05	10	131.76	98.17	10.49	0.70	789.64	789.57	793.9	793.77	(N/A)	41.16	0.47
MH B-5 EX-B	PJB-US29 E	OUT-B	RCP	48	8.34	8	139.31	107.48	11.09	0.76	789.55	789.48	793.59	793.48	(N/A)	42.05	0.56
PS B-1	PJB PS B-1	PCO US29 B-1	RCP	24	44.07	44	12.96	29.03	4.13	1.82	818	817.2	821.57	821.41	11.24	15.55	1.65
US29 B-1	PCO US29 B-1	PCO US29 B-2	RCP	24	3	3	16.75	25.29	5.33	3.33	817.1	817	821.37	821.33	14.27	17.71	1.25
MF B-1	MF B-1 EX	PCO US29 B-5	RCP	18	20.74	21	8.64	5.18	4.89	0.29	814.36	814.3	817.78	817.61	(N/A)	13.66	0.24
PB B-1	PB B-1 EX	PCO US29 B-7	RCP	18	18.53	19	11.52	19.07	6.52	3.99	811.84	811.1	815.38	815.11	10.09	15.52	3.30
CANE PP B-1 EX	CANE PP B-1 EX	EX_CMP_T	RCP	18	48.54	49	18.12	11.1	10.26	1.15	810.85	810.29	813.85	812.36	(N/A)	17.43	1.12
CANE PP B-1	EX_CMP_T	PCO US29 B-8	RCP	18	8	8	18.12	25.56	10.26	7.40	810.29	809.7	812.26	811.96	11.2	17.43	5.92
CI-110 EX	CI-110 (TY II) (15') EX	CI-105 (TY II) (15') EX	RCP	18	274.15	274	4.23	10.69	5.69	1.09	812	809	812.79	810.18	7.87	9.46	1.04
CI-105 EX	CI-105 (TY II) (15') EX	CI-115 (TY II) (15') EX	RCP	24	72.62	73	8.92	28.9	8.1	1.72	808.5	807.25	810.04	809.98	9.16	12.79	1.63
CI-115 EX	CI-115 (TY II) (15') EX	JB B-2 EX	RCP	24	70.5	71	10.77	39.14	3.43	3.16	807.15	804.92	809.92	809.75	8.6	14.12	2.99
WLDR B-2	PCO WLDR B-2	CI-105 (TY II) (15') EX	RC Arch Pipe	DES 3	8.22	8	4.69	15.4	4.7	0.97	808.7	808.62	810.12	810.11	6.05	6.92	0.68
System C																	
CI-55 EX	CI-55 (TY_II) (10') EX	CI-60 (TY_II) (15') EX	RCP	18	179.2	179	4.77	13.35	6.92	1.67	824.5	821.5	825.34	823.01	7.44	10.07	1.62
CI-60 EX	CI-60 (TY_II) (15') EX	CI-65 (TY_II) (15') EX	RCP	18	96.32	96	8.48	6.68	4.8	0.42	821.4	821	822.92	822.13	(N/A)	13.54	0.40
CI-65 EX	CI-65 (TY_II) (15') EX	JB A-1A EX	RCP	18	245.78	246	9.51	18.53	10.55	3.23	820	812.05	821.19	815.81	9.14	14.3	3.11
System D																	
US29 D-1	PCU US29 D-1	PCU US29 D-2	RCP	18	245	245	3.68	10.44	2.08	1.01	815.57	813.1	817.65	817.35	7.38	8.79	0.99
US29 D-2	PCU US29 D-2	PCU US29 D-3	RCP	18	195	195	7.18	9.99	4.06	0.93	813.01	811.2	817.28	816.34	11.29	12.46	0.91
US29 D-3	PCU US29 D-3	PCU US29 D-4	RCP	18	150.45	150	10.81	10.61	6.12	1.05	811.09	809.5	816.28	814.64	15.07	15.13	1.02
US29 D-4	PCU US29 D-4	PCU US29 D-5	RCP	18	114.99	115	13.88	8.48	7.85	0.68	809.38	808.6	814.76	812.67	(N/A)	16.54	0.65
US29 D-5	PCU US29 D-5	PJB-US29 D	RCP	24	107.33	107	16.88	14.22	5.37	0.41	808.04	807.6	812.12	811.5	(N/A)	17.78	0.40
System E																	
US29 E-1	PCU US29 E-1	PCU US29 E-2	RCP	18	195	195	2.69	12.63	5.68	1.48	804.4	801.5	805.02	802.34	5.64	7.47	1.45
US29 E-2	PCU US29 E-2	PCU US29 E-3	RCP	18	160	160	5.23	15.13	7.78	2.14	801.42	798	802.3	799.05	7.3	10.57	2.07
US29 E-3	PCU US29 E-3	PJB-US29 E	RCP	18	40.22	40	7.55	9.77	6.1	0.98	797.9	797.5	798.96	798.49	11.88	12.78	0.87

NOTES:

1. ANALYSIS WAS PERFORMED USING THE CURRENT VERSION OF OPENROADS DRAINAGE AND UTILITIES WHICH PERFORMS CALCULATIONS IN ACCORDANCE WITH FHWA HEC-22

STATE OF TEXAS
MICHAEL CURL
126986
LICENSED PROFESSIONAL ENGINEER
9/24/2025

GEORGETOWN TEXAS
more than welcome

THE ESTES GROUP
TBPE FIRM REG. NO. F-20926

Texas Department of Transportation

SH 29

HYDRAULIC DATA
100-YR STORM SEWER

SHEET 1 OF 1

CONT	SECT	JOB	HIGHWAY
0337	01	053	SH 29
DIST	COUNTY		SHEET NO.
AUS	WILLIAMSON		123

DATE: 9/24/2025 10:35:41 AM
FILE: pw://kh-pw.bentley.com:kh-pw-01/Documents/01 Active Projects/TX-GEO-069284005 - SH 29 Widening/4 - Design/Plan Set/5. Drainage/DRN Calc/SH29 DRN-LINK02.dgn

CK: DW: CK: DW:

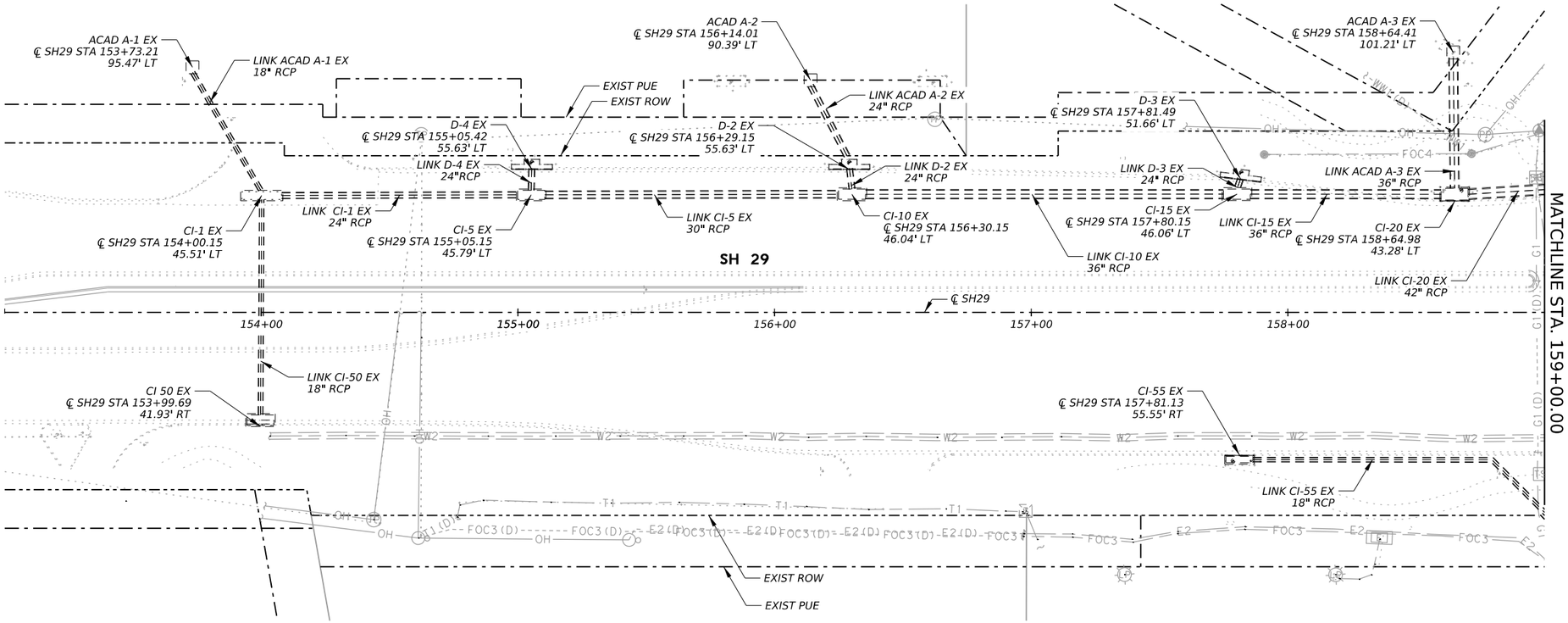

LEGEND

- EXIST PROPERTY LINE
- EXIST ROW
- EXIST PUBLIC UTILITY EASEMENT
- PROP ROW
- TEMP CONSTRUCTION EASEMENT
- PROP PUBLIC UTILITY EASEMENT
- EXISTING CAST IN PLACE INLET
- EXISTING PRECAST INLET
- PROPOSED PRECAST INLET
- PIPE REMOVAL
- INLET REMOVAL

NOTES:

1. SEE PCO AND PCU STANDARDS FOR INLET CONTROL POINT.
2. MANHOLE/JUNCTION CONTROL POINTS ARE THE TOP CENTER OF MANHOLE/JUNCTION
3. PROPOSED PIPE LIMITS ARE SHOWN FROM INSIDE WALL TO INSIDE WALL BETWEEN STRUCTURES AND LENGTHS ROUNDED TO THE NEAREST WHOLE NUMBER.
4. ALL EXISTING OFFSETS/ELEVATIONS ARE FROM AVAILABLE AS-BUILTS AND SURVEY INFORMATION AND ARE FOR CONTRACTORS INFORMATION ONLY. ANY PROPOSED TIE-INS TO EXISTING STORM SEWER TO BE VERIFIED BY THE CONTRACTOR.

0' 25' 50' HORZ
0' 2.5' 5' VERT

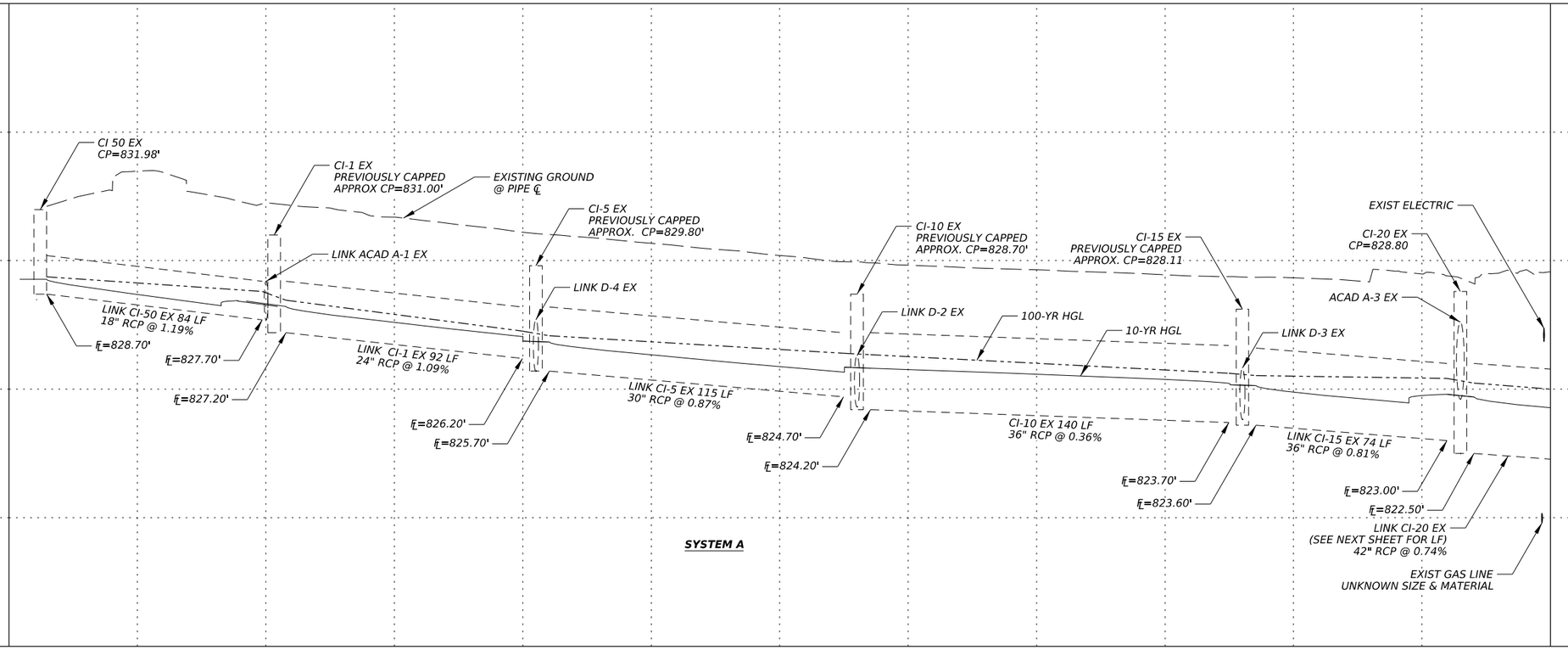

STATE OF TEXAS
MICHAEL CURL
126986
LICENSED PROFESSIONAL ENGINEER
9/24/2025

GEORGETOWN TEXAS
more than welcome

THE ESTES GROUP
TBPE FIRM REG. NO. F-20926

Texas Department of Transportation

SH 29

WESTBOUND DRAINAGE PLAN & PROFILE STA 153+00 TO STA 159+00

SHEET 1 OF 5

CONT	SECT	JOB	HIGHWAY
0337	01	053	SH 29
DIST	COUNTY		SHEET NO.
AUS	WILLIAMSON		124

DATE: 9/24/2025 10:36:05 AM
FILE: pw://kh-pw.bentley.com:kh-pw-01/Documents/01 Active Projects/TX-GEO-069284005 - SH 29 Widening/4 - Design/Plan Set/5. Drainage/DRN Layouts/SH29 DRN-1.dgn

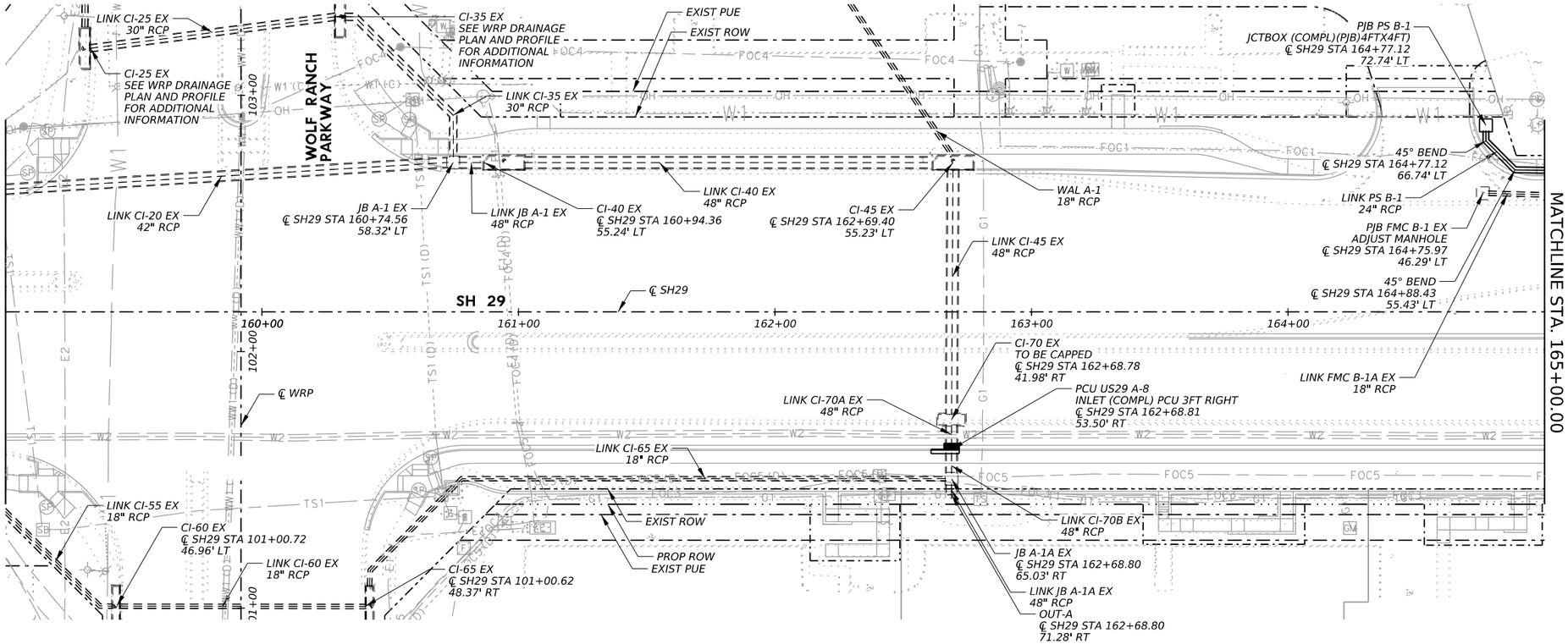

LEGEND

- EXIST PROPERTY LINE
- EXIST ROW
- EXIST PUBLIC UTILITY EASEMENT
- PROP ROW
- TEMP CONSTRUCTION EASEMENT
- PROP PUBLIC UTILITY EASEMENT
- EXISTING CAST IN PLACE INLET
- EXISTING PRECAST INLET
- PROPOSED PRECAST INLET
- PIPE REMOVAL
- INLET REMOVAL

NOTES:

1. SEE PCO AND PCU STANDARDS FOR INLET CONTROL POINT.
2. MANHOLE/JUNCTION CONTROL POINTS ARE THE TOP CENTER OF MANHOLE/JUNCTION
3. PROPOSED PIPE LIMITS ARE SHOWN FROM INSIDE WALL TO INSIDE WALL BETWEEN STRUCTURES AND LENGTHS ROUNDED TO THE NEAREST WHOLE NUMBER.
4. ALL EXISTING OFFSETS/ELEVATIONS ARE FROM AVAILABLE AS-BUILTS AND SURVEY INFORMATION AND ARE FOR CONTRACTORS INFORMATION ONLY. ANY PROPOSED TIE-INS TO EXISTING STORM SEWER TO BE VERIFIED BY THE CONTRACTOR.

0′ 25′ 50′ HORZ
0′ 2.5′ 5′ VERT

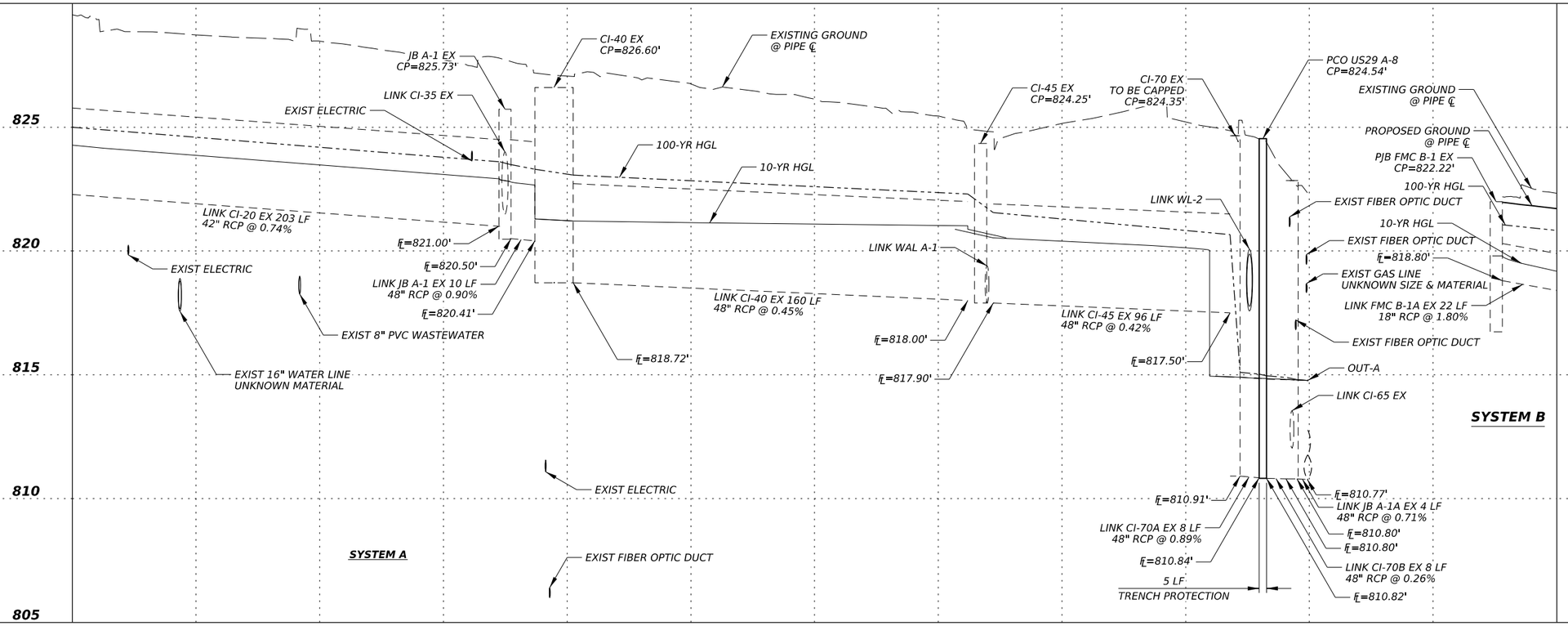

STATE OF TEXAS
MICHAEL CURL
126986
LICENSED PROFESSIONAL ENGINEER
9/24/2025

GEORGETOWN TEXAS
more than welcome

THE ESTES GROUP
TBPE FIRM REG. NO. F-20926

Texas Department of Transportation

SH 29

WESTBOUND DRAINAGE PLAN & PROFILE STA 159+00 TO STA 165+00

SHEET 2 OF 5

CONT	SECT	JOB	HIGHWAY
0337	01	053	SH 29
DIST	COUNTY		SHEET NO.
AUS	WILLIAMSON		125

DATE: 9/24/2025 10:36:26 AM
FILE: pw://kh-pw.bentley.com:kh-pw-01/Documents/01 Active Projects/TX-GEO-069284005 - SH 29 Widening/4 - Design/Plan Set/5. Drainage/DRN Layouts/SH29 DRN-2.dgn

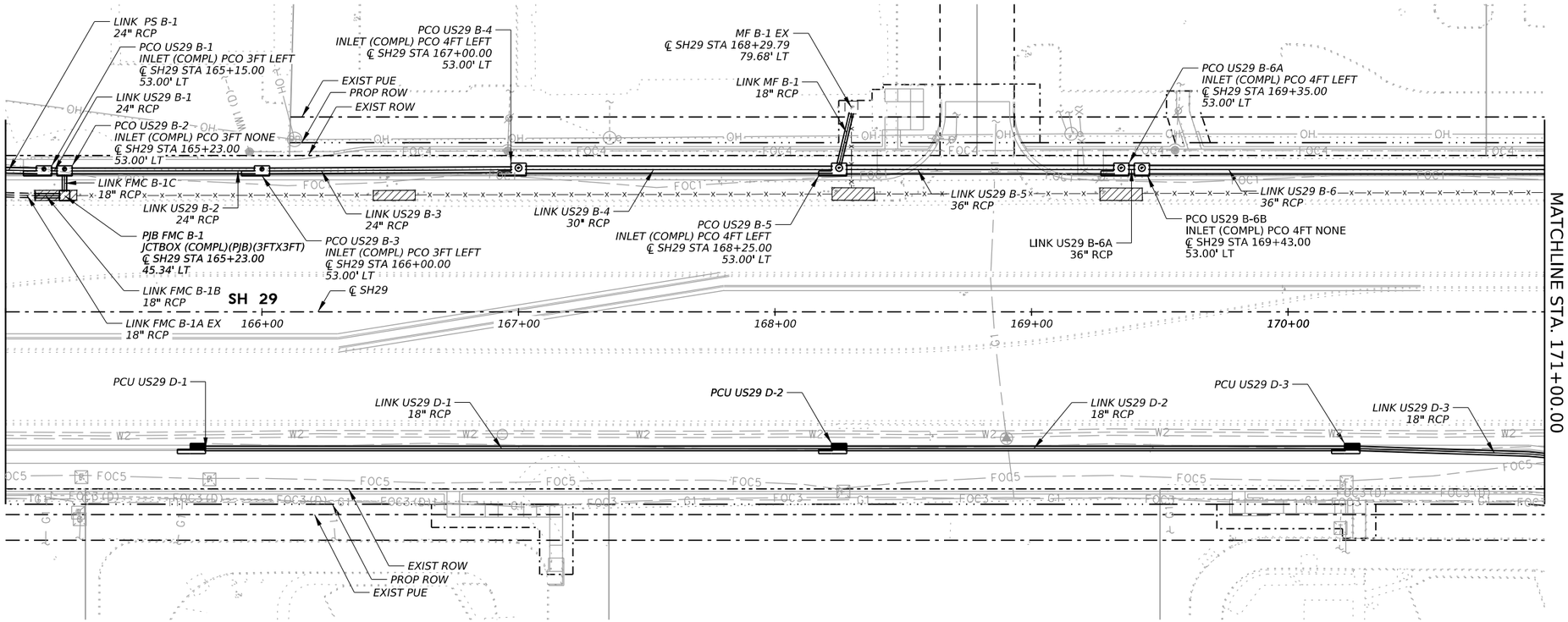

LEGEND

- EXIST PROPERTY LINE
- EXIST ROW
- EXIST PUBLIC UTILITY EASEMENT
- PROP ROW
- TEMP CONSTRUCTION EASEMENT
- PROP PUBLIC UTILITY EASEMENT
- EXISTING CAST IN PLACE INLET
- EXISTING PRECAST INLET
- PROPOSED PRECAST INLET
- PIPE REMOVAL
- INLET REMOVAL

NOTES:

1. SEE PCO AND PCU STANDARDS FOR INLET CONTROL POINT.
2. MANHOLE/JUNCTION CONTROL POINTS ARE THE TOP CENTER OF MANHOLE/JUNCTION
3. PROPOSED PIPE LIMITS ARE SHOWN FROM INSIDE WALL TO INSIDE WALL BETWEEN STRUCTURES AND LENGTHS ROUNDED TO THE NEAREST WHOLE NUMBER.
4. ALL EXISTING OFFSETS/ELEVATIONS ARE FROM AVAILABLE AS-BUILTS AND SURVEY INFORMATION AND ARE FOR CONTRACTORS INFORMATION ONLY. ANY PROPOSED TIE-INS TO EXISTING STORM SEWER TO BE VERIFIED BY THE CONTRACTOR.

0′ 25′ 50′ HORZ
0′ 2.5′ 5′ VERT

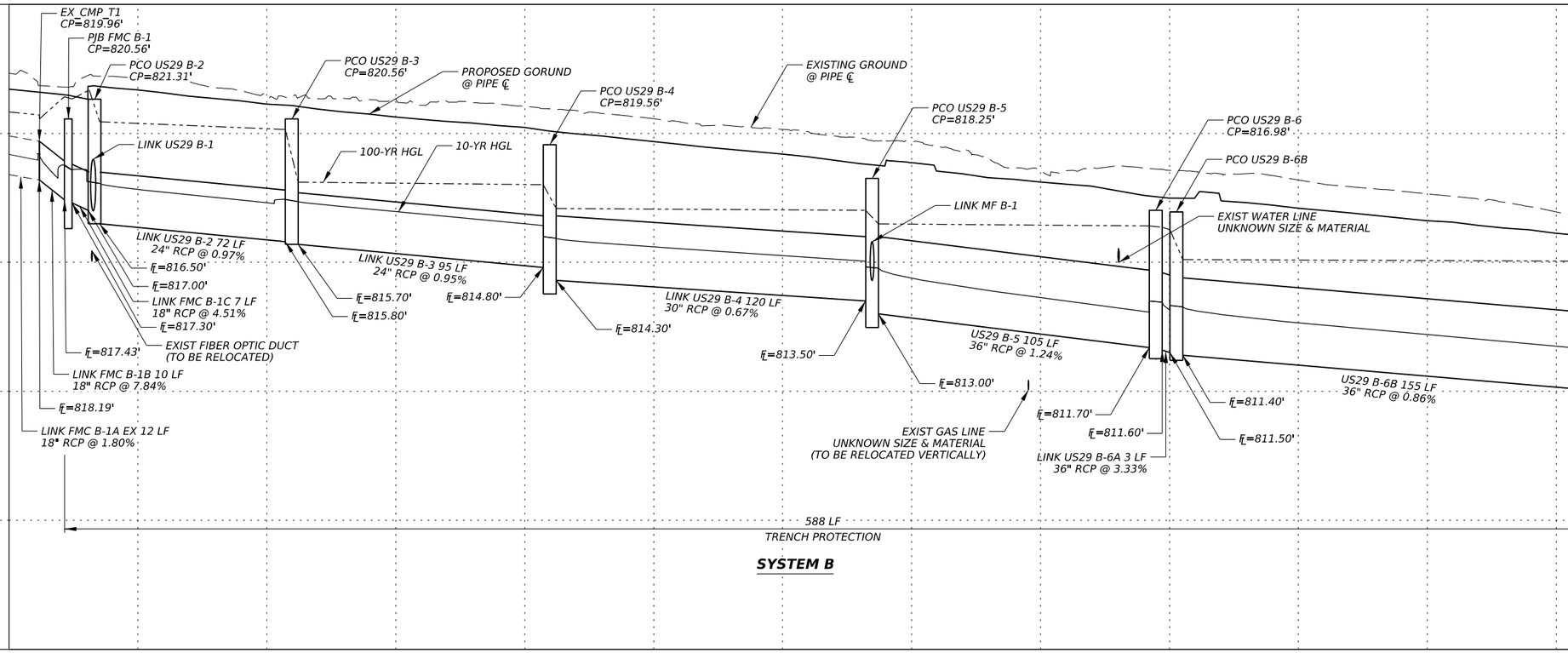

SYSTEM B

STATE OF TEXAS
MICHAEL CURL
126986
LICENSED PROFESSIONAL ENGINEER
9/24/2025

GEORGETOWN TEXAS
more than welcome

THE ESTES GROUP
TBPE FIRM REG. NO. F-20926

Texas Department of Transportation

SH 29

WESTBOUND DRAINAGE PLAN & PROFILE STA 165+00 TO 171+00

SHEET 3 OF 5

CONT	SECT	JOB	HIGHWAY
0337	01	053	SH 29
DIST	COUNTY		SHEET NO.
AUS	WILLIAMSON		126

DATE: 9/24/2025 10:36:48 AM
FILE: pw://kh-pw.bentley.com:kh-pw-01/Documents/01 Active Projects/TX-GEO-069284005 - SH 29 Widening/4 - Design/Plan Set/5. Drainage/DRN Layouts/SH29 DRN-3.dgn

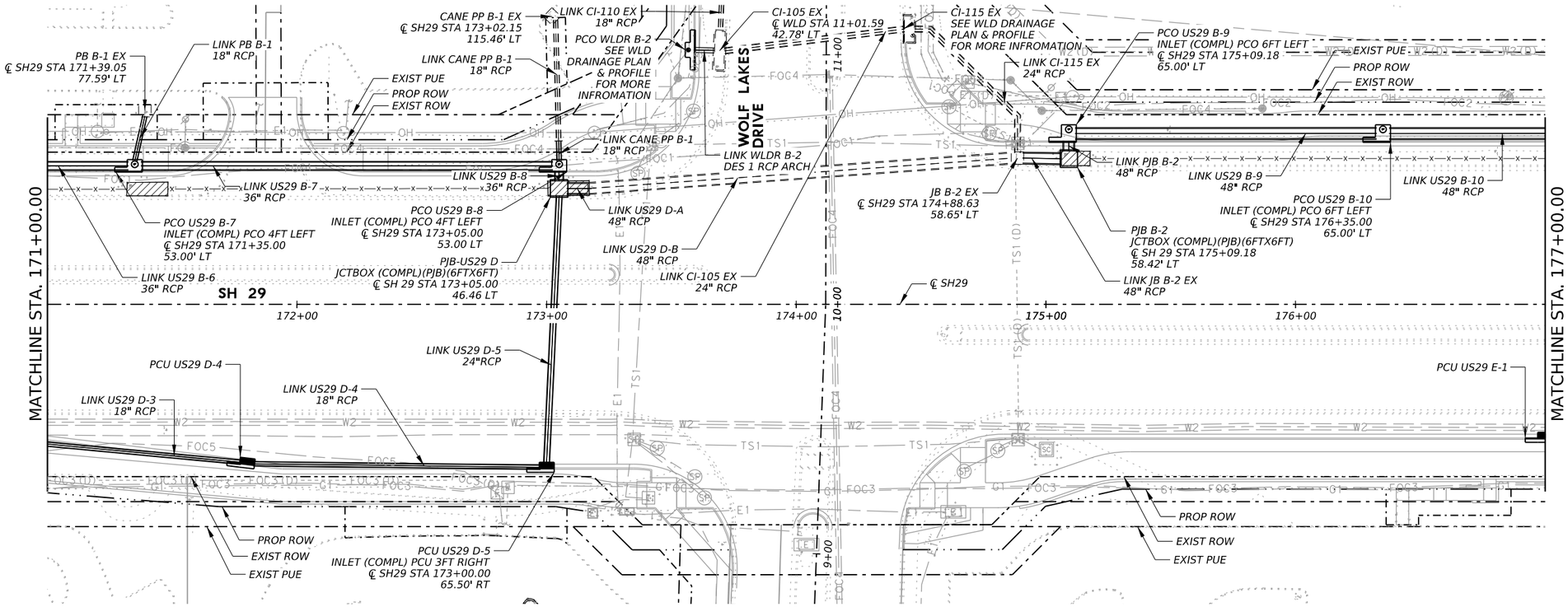

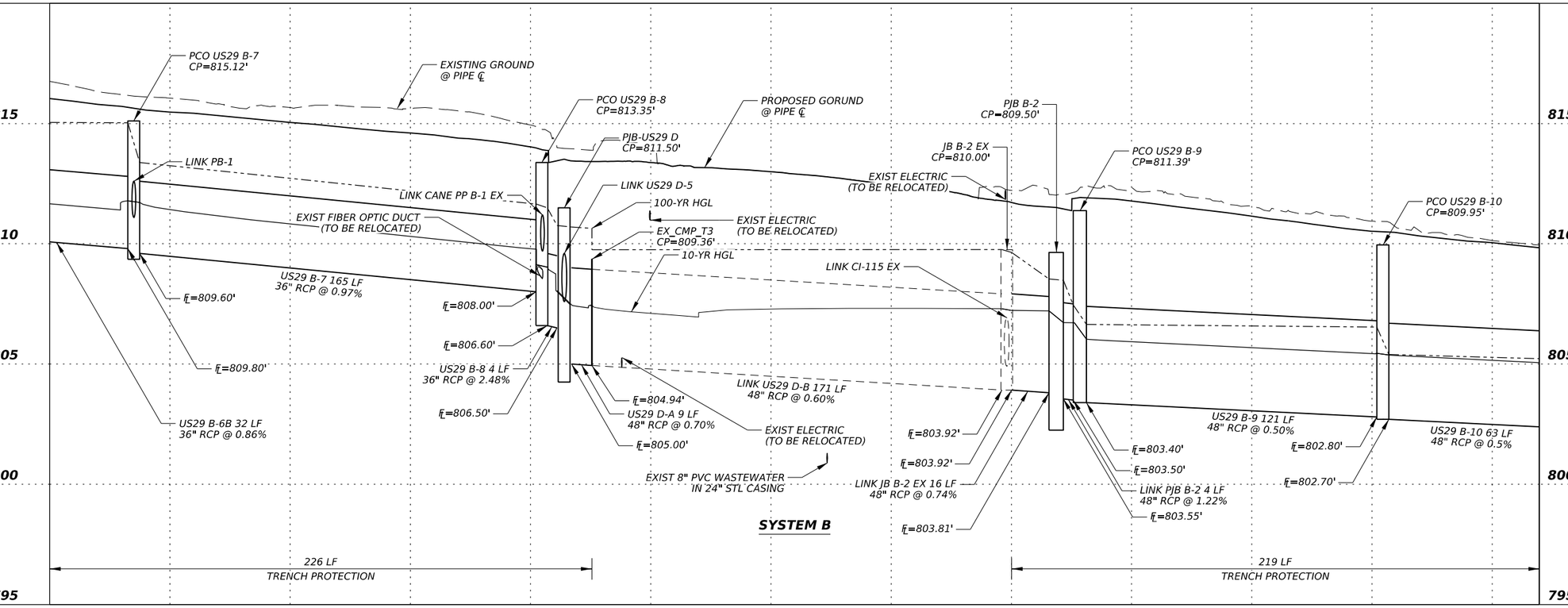

STATE OF TEXAS
MICHAEL CURL
126986
LICENSED
PROFESSIONAL ENGINEER
9/24/2025

GEORGETOWN TEXAS
more than welcome

THE ESTES GROUP
TBPE FIRM REG. NO. F-20926

Texas Department of Transportation

SH 29

WESTBOUND DRAINAGE PLAN & PROFILE STA 171+00 TO STA 177+00

SHEET 4 OF 5

CONT	SECT	JOB	HIGHWAY
0337	01	053	SH 29
DIST	COUNTY		SHEET NO.
AUS	WILLIAMSON		127

DATE: 9/24/2025 10:37:09 AM
FILE: pw://kh-pw.bentley.com:kh-pw-01/Documents/01 Active Projects/TX-GEO-069284005 - SH 29 Widening/4 - Design/Plan Set/5. Drainage/DRN Layouts/SH29 DRN-4.dgn

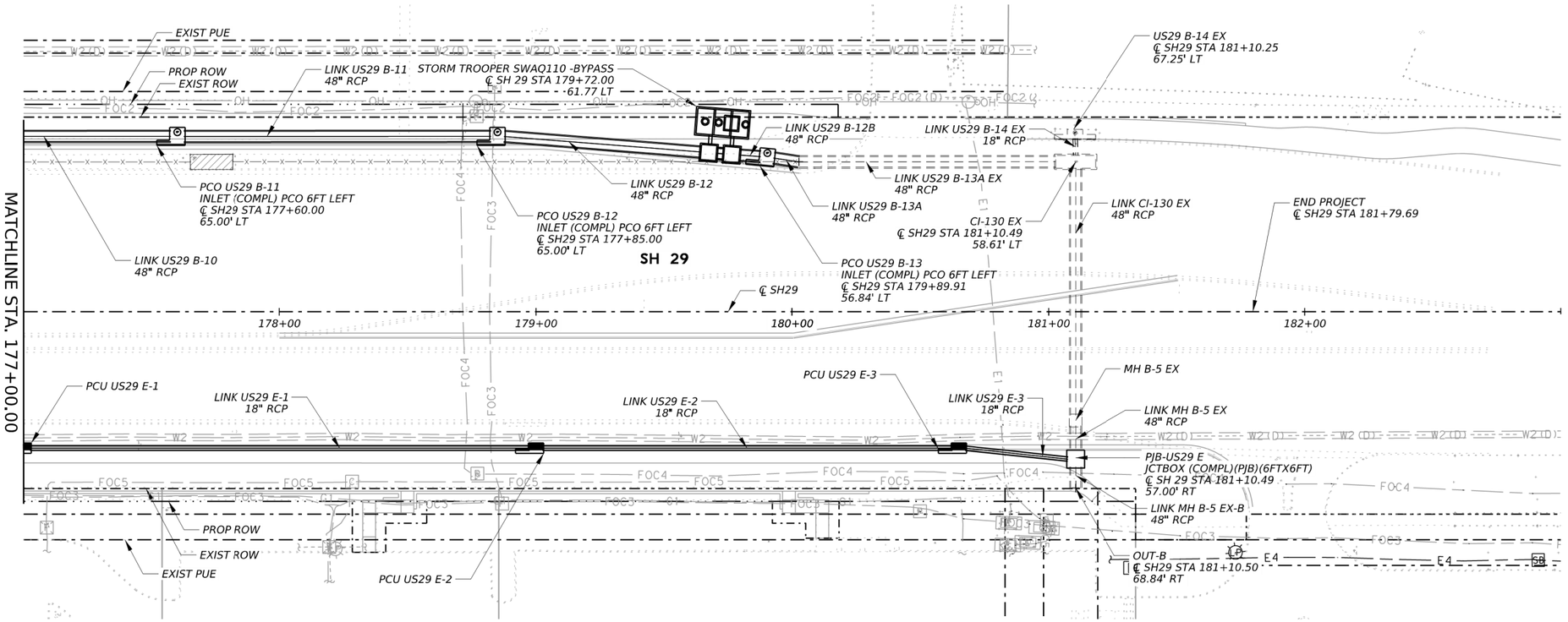

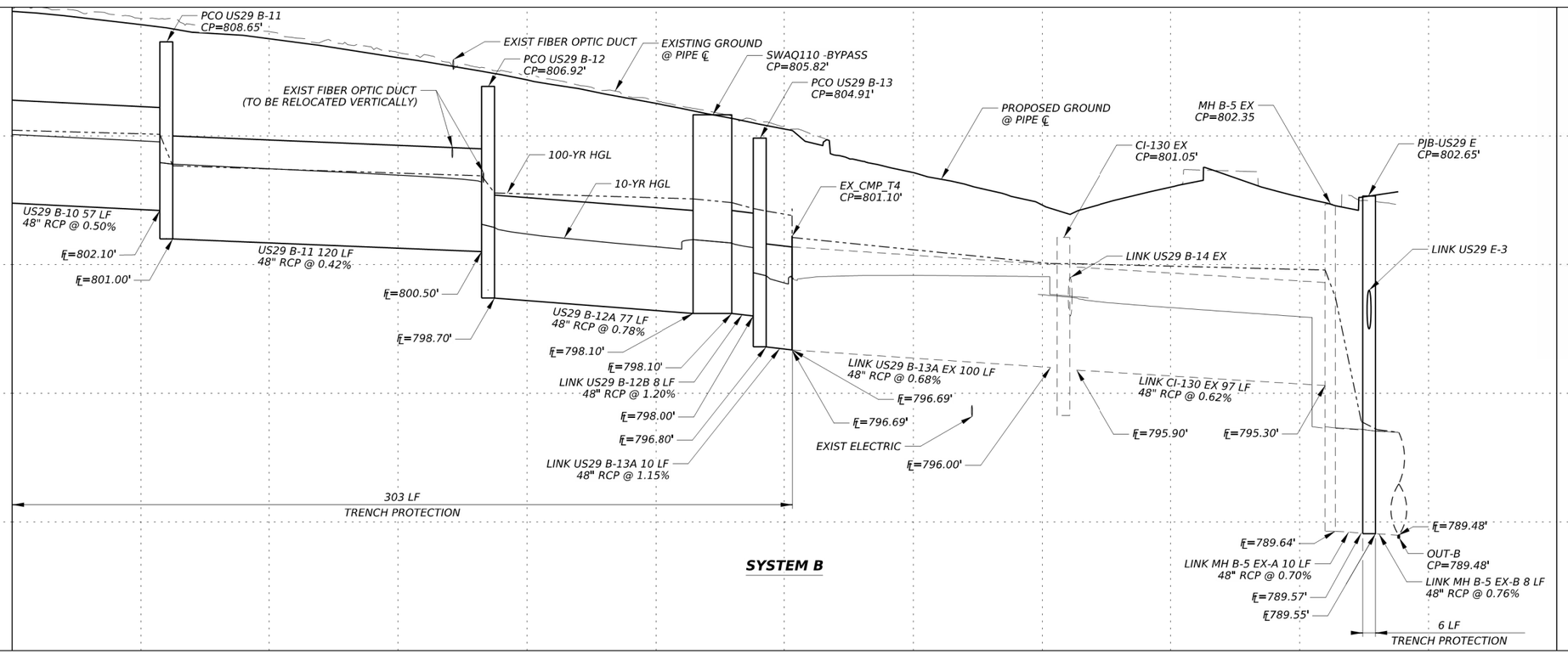

LEGEND

- EXIST PROPERTY LINE
- EXIST ROW
- EXIST PUBLIC UTILITY EASEMENT
- PROP ROW
- TEMP CONSTRUCTION EASEMENT
- PROP PUBLIC UTILITY EASEMENT
- EXISTING CAST IN PLACE INLET
- EXISTING PRECAST INLET
- PROPOSED PRECAST INLET
- PIPE REMOVAL
- INLET REMOVAL

NOTES:

1. SEE PCO AND PCU STANDARDS FOR INLET CONTROL POINT.
2. MANHOLE/JUNCTION CONTROL POINTS ARE THE TOP CENTER OF MANHOLE/JUNCTION
3. PROPOSED PIPE LIMITS ARE SHOWN FROM INSIDE WALL TO INSIDE WALL BETWEEN STRUCTURES AND LENGTHS ROUNDED TO THE NEAREST WHOLE NUMBER.
4. ALL EXISTING OFFSETS/ELEVATIONS ARE FROM AVAILABLE AS-BUILTS AND SURVEY INFORMATION AND ARE FOR CONTRACTORS INFORMATION ONLY. ANY PROPOSED TIE-INS TO EXISTING STORM SEWER TO BE VERIFIED BY THE CONTRACTOR.

0′ 25′ 50′ HORZ
0′ 2.5′ 5′ VERT

STATE OF TEXAS
MICHAEL CURL
126986
LICENSED
PROFESSIONAL ENGINEER
10/7/2025

GEORGETOWN TEXAS
more than welcome

THE ESTES GROUP
TBPE FIRM REG. NO. F-20926

Texas Department of Transportation

SH 29

WESTBOUND DRAINAGE PLAN & PROFILE STA 177+00 TO END PROJECT

SHEET 5 OF 5

CONT	SECT	JOB	HIGHWAY
0337	01	053	SH 29
DIST	COUNTY		SHEET NO.
AUS	WILLIAMSON		128

DATE: 10/7/2025 11:41:51 AM
FILE: pw://kh-pw.bentley.com:kh-pw-01/Documents/01 Active Projects/TX-GEO-069284005 - SH 29 Widening/4 - Design/Plan Set/5. Drainage/DRN Layouts/SH29 DRN-5.dgn

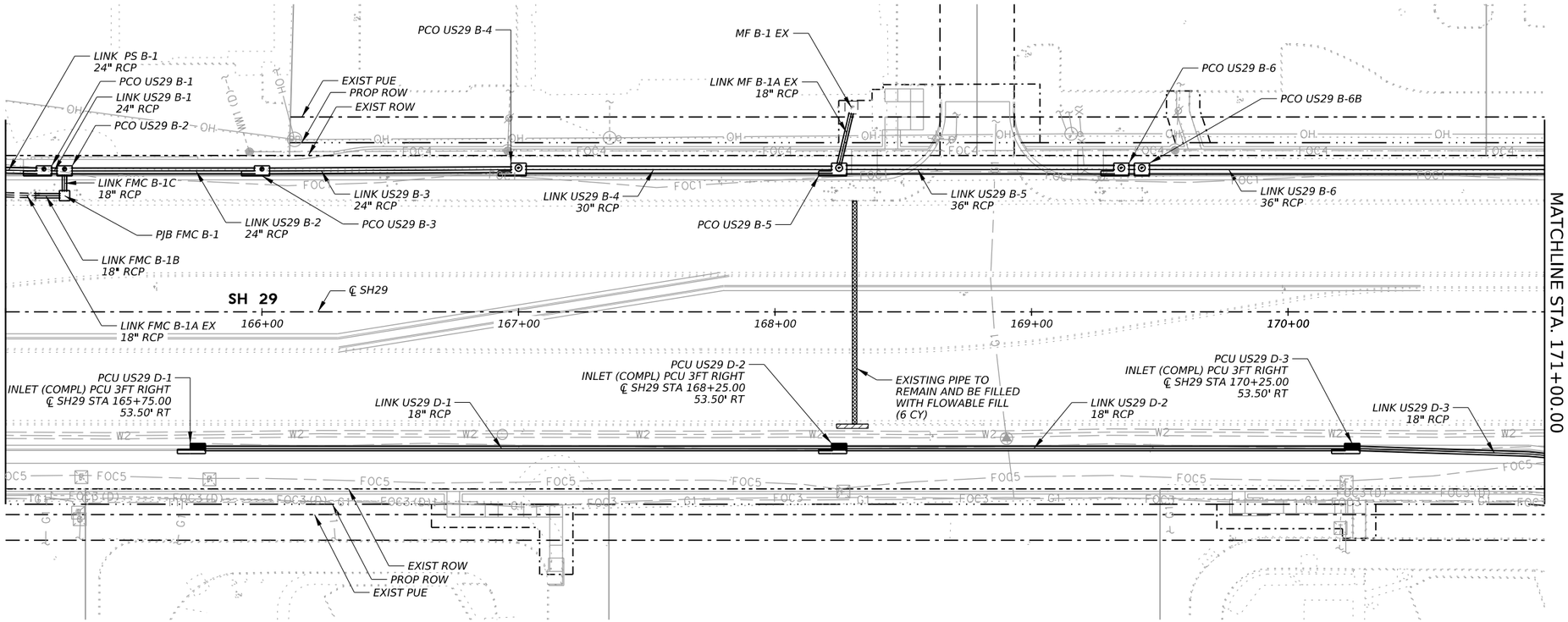

LEGEND

- EXIST PROPERTY LINE
- EXIST ROW
- EXIST PUBLIC UTILITY EASEMENT
- PROP ROW
- TEMP CONSTRUCTION EASEMENT
- PROP PUBLIC UTILITY EASEMENT
- EXISTING CAST IN PLACE INLET
- EXISTING PRECAST INLET
- PROPOSED PRECAST INLET
- PIPE REMOVAL
- INLET REMOVAL

NOTES:

1. SEE PCO AND PCU STANDARDS FOR INLET CONTROL POINT.
2. MANHOLE/JUNCTION CONTROL POINTS ARE THE TOP CENTER OF MANHOLE/JUNCTION
3. PROPOSED PIPE LIMITS ARE SHOWN FROM INSIDE WALL TO INSIDE WALL BETWEEN STRUCTURES AND LENGTHS ROUNDED TO THE NEAREST WHOLE NUMBER.
4. ALL EXISTING OFFSETS/ELEVATIONS ARE FROM AVAILABLE AS-BUILTS AND SURVEY INFORMATION AND ARE FOR CONTRACTORS INFORMATION ONLY. ANY PROPOSED TIE-INS TO EXISTING STORM SEWER TO BE VERIFIED BY THE CONTRACTOR.

0′ 25′ 50′ HORZ
0′ 2.5′ 5′ VERT

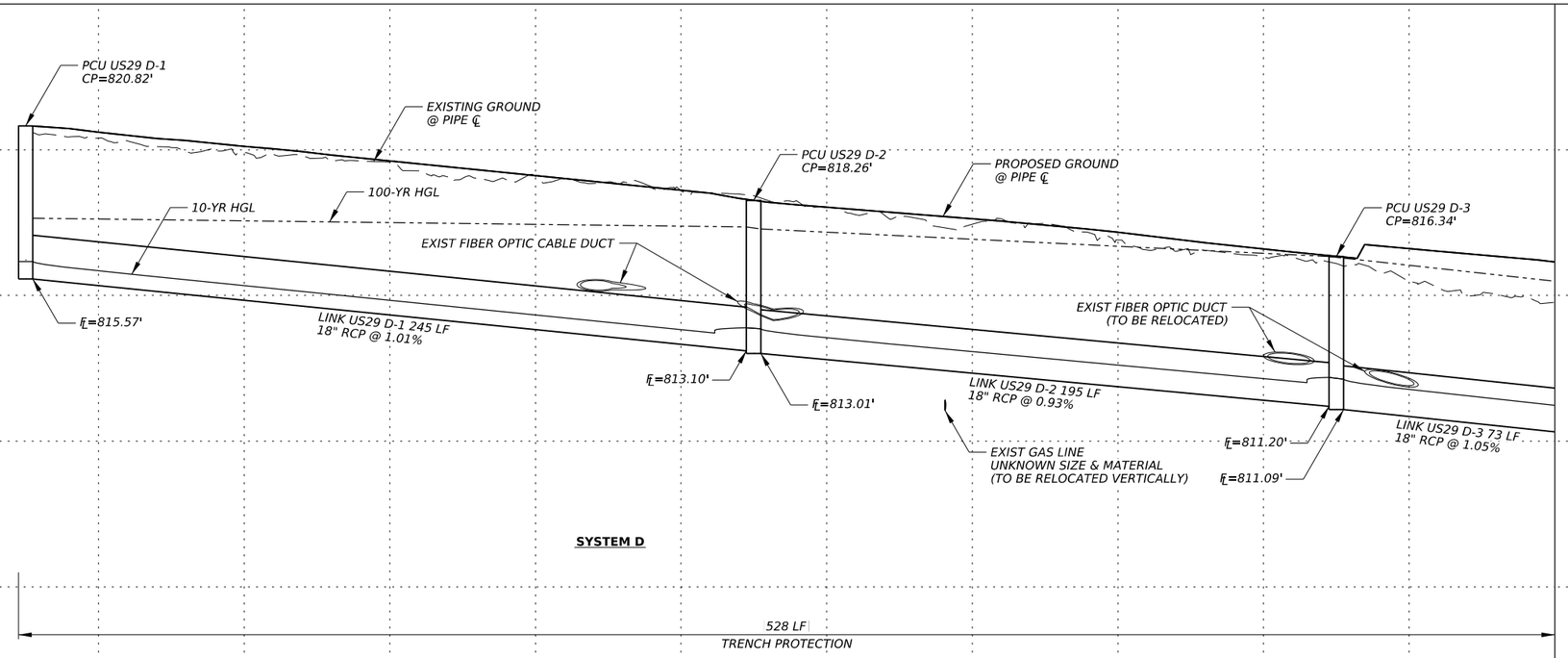

SYSTEM D

528 LF
TRENCH PROTECTION

STATE OF TEXAS
MICHAEL CURL
126986
LICENSED
PROFESSIONAL ENGINEER
9/24/2025

GEORGETOWN
TEXAS
more than welcome

THE ESTES GROUP
TBPE FIRM REG. NO. F-20926

Texas Department of Transportation

SH 29

EASTBOUND
DRAINAGE PLAN & PROFILE
STA 165+00 TO 171+00

SHEET 1 OF 3

CONT	SECT	JOB	HIGHWAY
0337	01	053	SH 29
DIST	COUNTY		SHEET NO.
AUS	WILLIAMSON		129

DATE: 9/24/2025 10:37:50 AM
FILE: pw://kh-pw.bentley.com:kh-pw-01/Documents/01 Active Projects/TX-GEO-069284005 - SH 29 Widening/4 - Design/Plan Set/5. Drainage/DRN Layouts/SH29 DRN-6.dgn

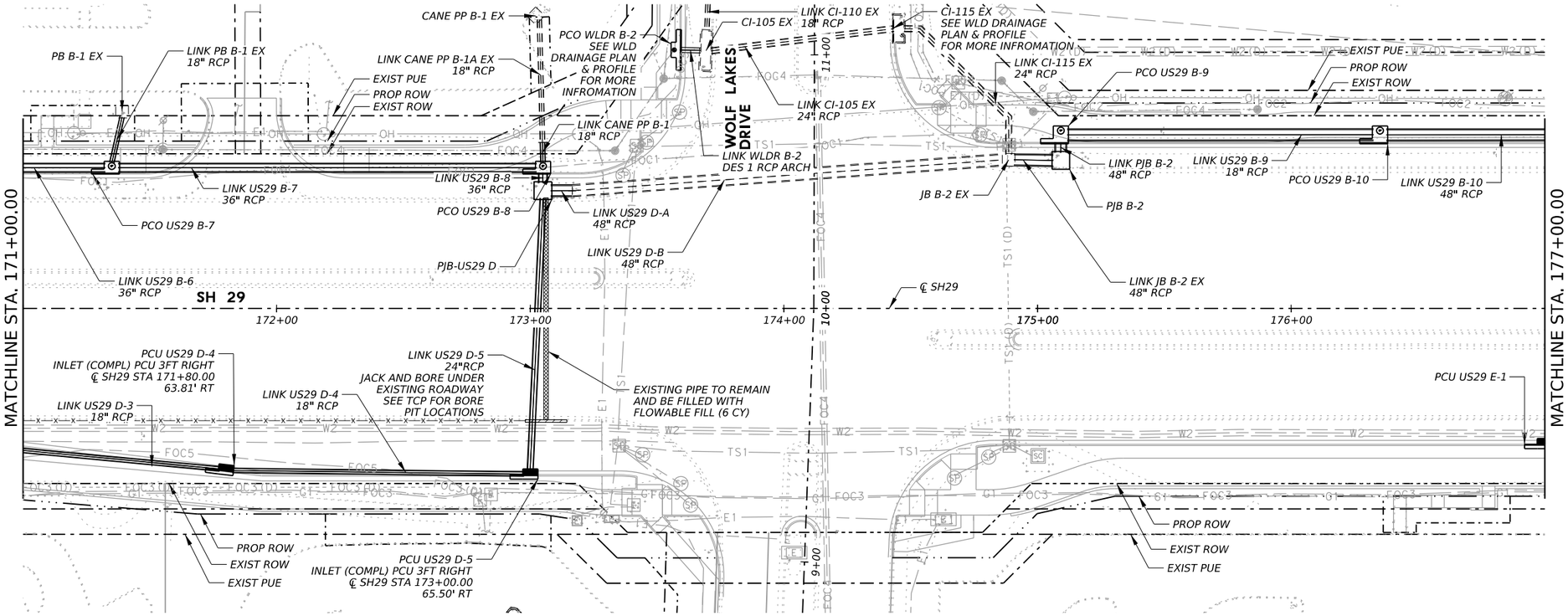

LEGEND

- EXIST PROPERTY LINE
- EXIST ROW
- EXIST PUBLIC UTILITY EASEMENT
- PROP ROW
- TEMP CONSTRUCTION EASEMENT
- PROP PUBLIC UTILITY EASEMENT
- EXISTING CAST IN PLACE INLET
- EXISTING PRECAST INLET
- PROPOSED PRECAST INLET
- PIPE REMOVAL
- INLET REMOVAL

NOTES:

1. SEE PCO AND PCU STANDARDS FOR INLET CONTROL POINT.
2. MANHOLE/JUNCTION CONTROL POINTS ARE THE TOP CENTER OF MANHOLE/JUNCTION
3. PROPOSED PIPE LIMITS ARE SHOWN FROM INSIDE WALL TO INSIDE WALL BETWEEN STRUCTURES AND LENGTHS ROUNDED TO THE NEAREST WHOLE NUMBER.
4. ALL EXISTING OFFSETS/ELEVATIONS ARE FROM AVAILABLE AS-BUILTS AND SURVEY INFORMATION AND ARE FOR CONTRACTORS INFORMATION ONLY. ANY PROPOSED TIE-INS TO EXISTING STORM SEWER TO BE VERIFIED BY THE CONTRACTOR.

0' 25' 50' HORZ
0' 2.5' 5' VERT

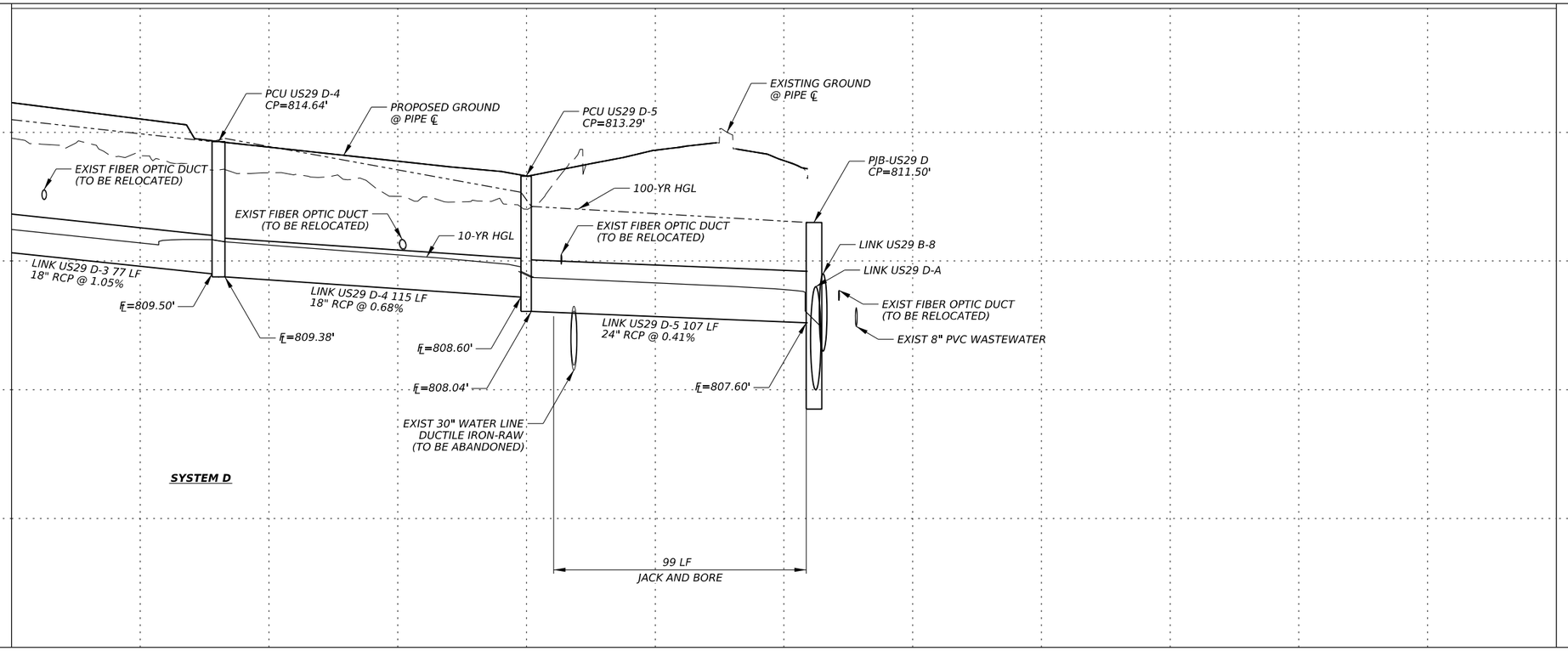

SYSTEM D

STATE OF TEXAS
MICHAEL CURL
126986
LICENSED PROFESSIONAL ENGINEER
9/24/2025

GEORGETOWN TEXAS
more than welcome

THE ESTES GROUP
TBPE FIRM REG. NO. F-20926

Texas Department of Transportation

SH 29

EASTBOUND DRAINAGE PLAN & PROFILE STA 171+00 TO STA 177+00

SHEET 2 OF 3

CONT	SECT	JOB	HIGHWAY
0337	01	053	SH 29
DIST	COUNTY		SHEET NO.
AUS	WILLIAMSON		130

DATE: 9/24/2025 10:38:12 AM
FILE: pw://kh-pw.bentley.com:kh-pw-01/Documents/01 Active Projects/TX-GEO-069284005 - SH 29 Widening/4 - Design/Plan Set/5. Drainage/DRN Layouts/SH29 DRN-7.dgn

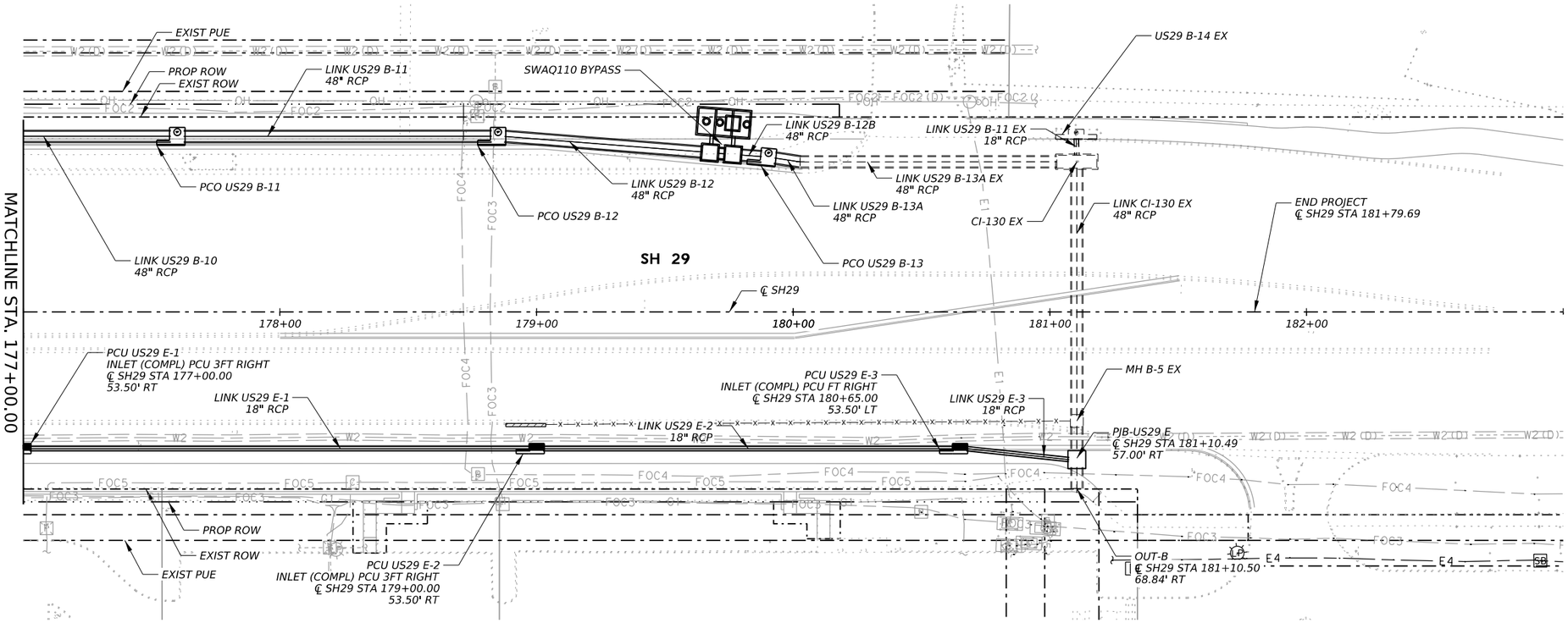

LEGEND

- EXIST PROPERTY LINE
- EXIST ROW
- EXIST PUBLIC UTILITY EASEMENT
- PROP ROW
- TEMP CONSTRUCTION EASEMENT
- PROP PUBLIC UTILITY EASEMENT
- EXISTING CAST IN PLACE INLET
- EXISTING PRECAST INLET
- PROPOSED PRECAST INLET
- PIPE REMOVAL
- INLET REMOVAL

NOTES:

1. SEE PCO AND PCU STANDARDS FOR INLET CONTROL POINT.
2. MANHOLE/JUNCTION CONTROL POINTS ARE THE TOP CENTER OF MANHOLE/JUNCTION
3. PROPOSED PIPE LIMITS ARE SHOWN FROM INSIDE WALL TO INSIDE WALL BETWEEN STRUCTURES AND LENGTHS ROUNDED TO THE NEAREST WHOLE NUMBER.
4. ALL EXISTING OFFSETS/ELEVATIONS ARE FROM AVAILABLE AS-BUILTS AND SURVEY INFORMATION AND ARE FOR CONTRACTORS INFORMATION ONLY. ANY PROPOSED TIE-INS TO EXISTING STORM SEWER TO BE VERIFIED BY THE CONTRACTOR.

0′ 25′ 50′ HORZ
0′ 2.5′ 5′ VERT

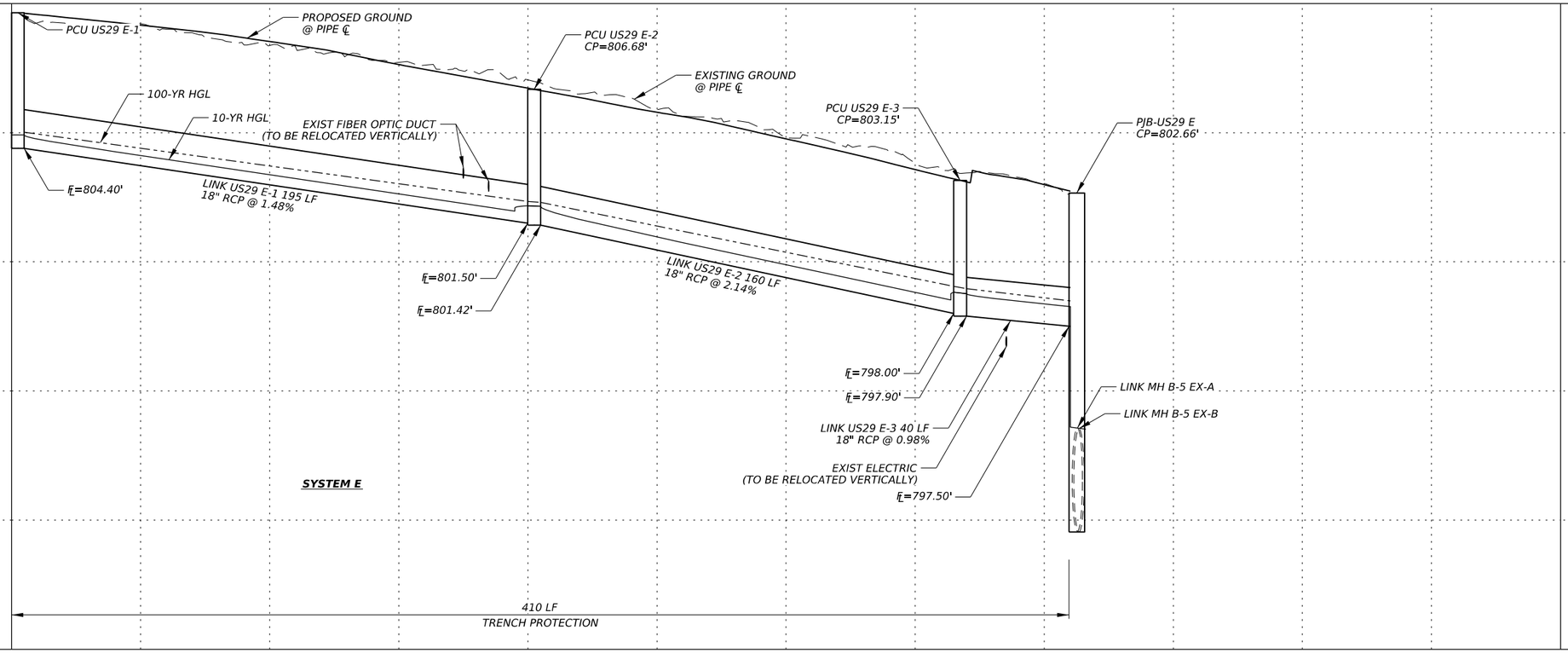

STATE OF TEXAS
MICHAEL CURL
126986
LICENSED PROFESSIONAL ENGINEER
9/24/2025

GEORGETOWN TEXAS
more than welcome

THE ESTES GROUP
TBPE FIRM REG. NO. F-20926

Texas Department of Transportation

SH 29

EASTBOUND DRAINAGE PLAN & PROFILE STA 177+00 TO END PROJECT

SHEET 3 OF 3

CONT	SECT	JOB	HIGHWAY
0337	01	053	SH 29
DIST	COUNTY		SHEET NO.
AUS	WILLIAMSON		131

DATE: 9/24/2025 10:38:33 AM
FILE: pw://kh-pw.bentley.com:kh-pw-01/Documents/01 Active Projects/TX-GEO-069284005 - SH 29 Widening/4 - Design/Plan Set/5. Drainage/DRN Layouts/SH29 DRN-8.dgn

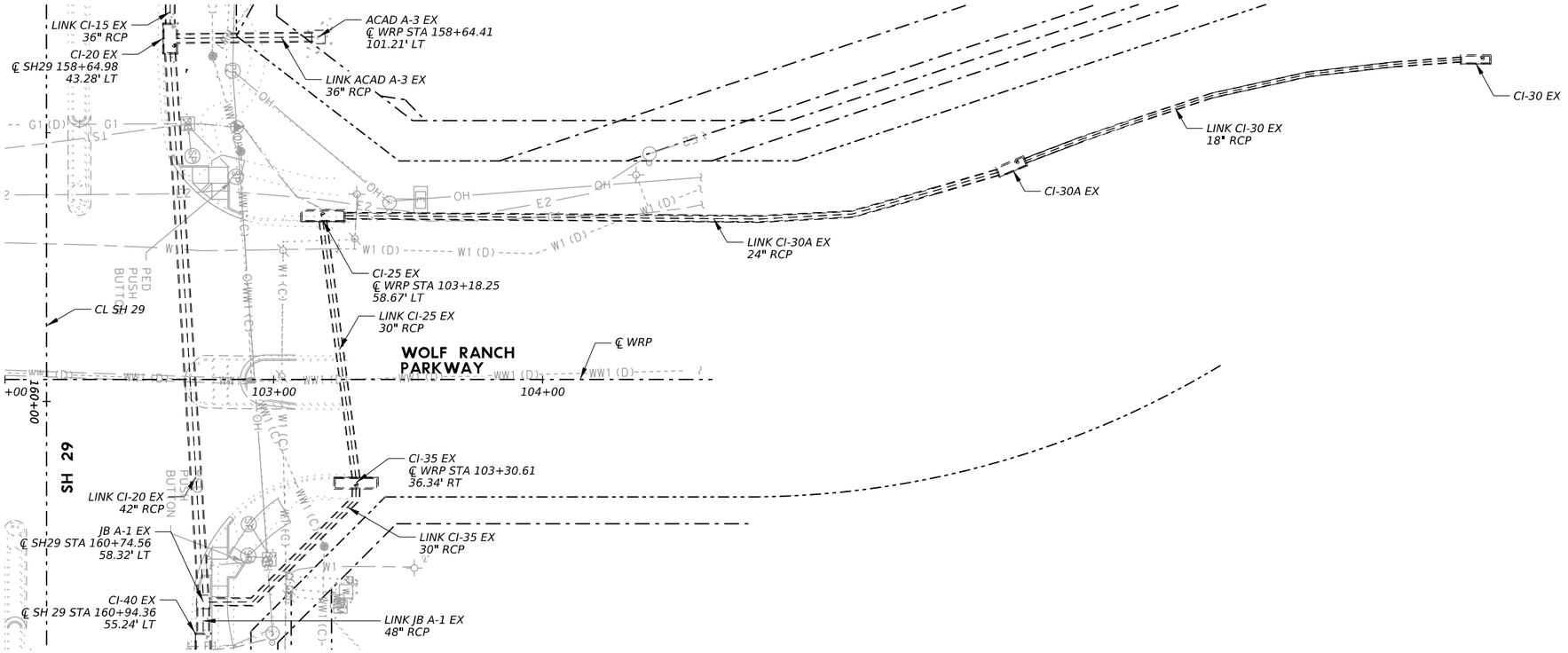

LEGEND

- EXIST PROPERTY LINE
- EXIST ROW
- EXIST PUBLIC UTILITY EASEMENT
- PROP ROW
- TEMP CONSTRUCTION EASEMENT
- PROP PUBLIC UTILITY EASEMENT
- EXISTING CAST IN PLACE INLET
- EXISTING PRECAST INLET
- PROPOSED PRECAST INLET
- PIPE REMOVAL
- INLET REMOVAL

NOTES:

1. SEE PCO AND PCU STANDARDS FOR INLET CONTROL POINT.
2. MANHOLE/JUNCTION CONTROL POINTS ARE THE TOP CENTER OF MANHOLE/JUNCTION
3. PROPOSED PIPE LIMITS ARE SHOWN FROM INSIDE WALL TO INSIDE WALL BETWEEN STRUCTURES AND LENGTHS ROUNDED TO THE NEAREST WHOLE NUMBER.
4. ALL EXISTING OFFSETS/ELEVATIONS ARE FROM AVAILABLE AS-BUILTS AND SURVEY INFORMATION AND ARE FOR CONTRACTORS INFORMATION ONLY. ANY PROPOSED TIE-INS TO EXISTING STORM SEWER TO BE VERIFIED BY THE CONTRACTOR.

0′ 25′ 50′ HORZ
0′ 2.5′ 5′ VERT

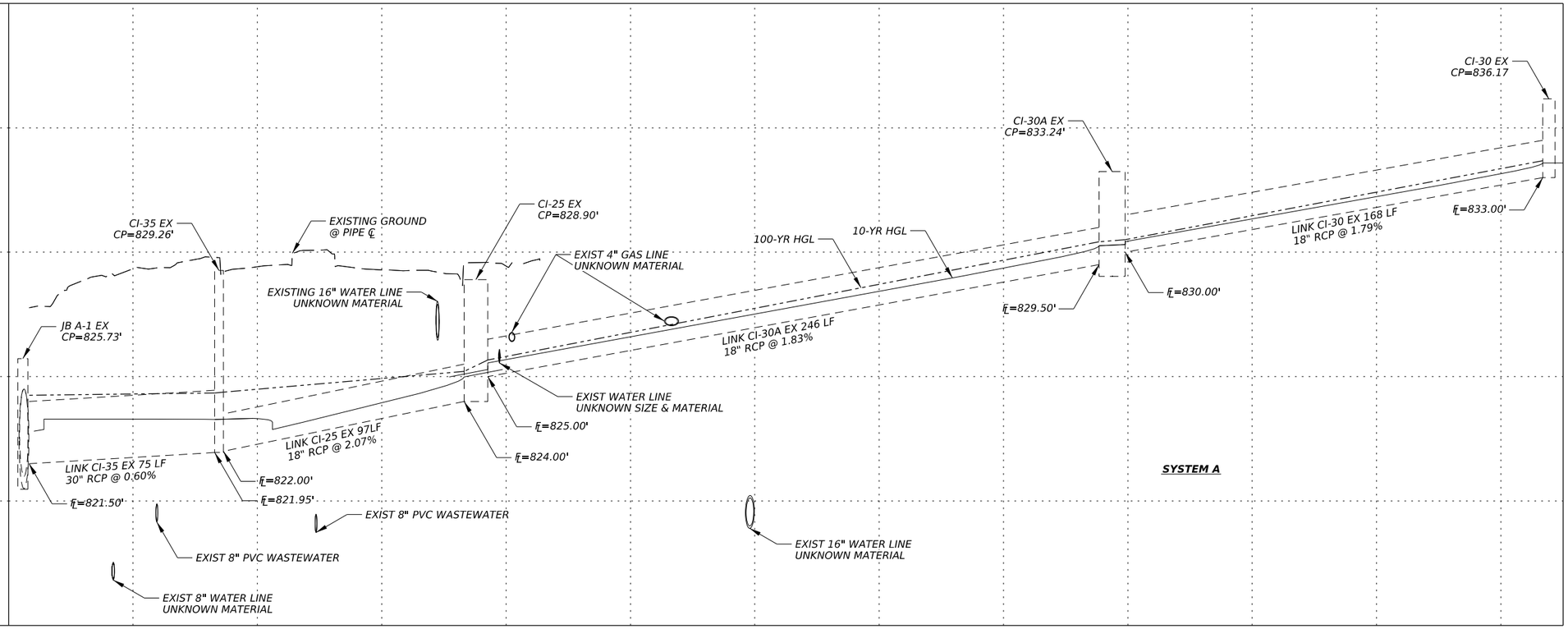

STATE OF TEXAS
MICHAEL CURL
126986
LICENSED
PROFESSIONAL ENGINEER
9/24/2025

GEORGETOWN TEXAS
more than welcome

THE ESTES GROUP
TBPE FIRM REG. NO. F-20926

Texas Department of Transportation

SH 29
WOLF RANCH PARKWAY
DRAINAGE PLAN & PROFILE
BEGIN TO END

SHEET 1 OF 1

CONT	SECT	JOB	HIGHWAY
0337	01	053	SH 29
DIST	COUNTY		SHEET NO.
AUS	WILLIAMSON		132

DATE: 9/24/2025 10:38:54 AM
FILE: pw://kh-pw.bentley.com:kh-pw-01/Documents/01 Active Projects/TX-GEO-069284005 - SH 29 Widening/4 - Design/Plan Set/5. Drainage/DRN Layouts/WRP DRN-1.dgn

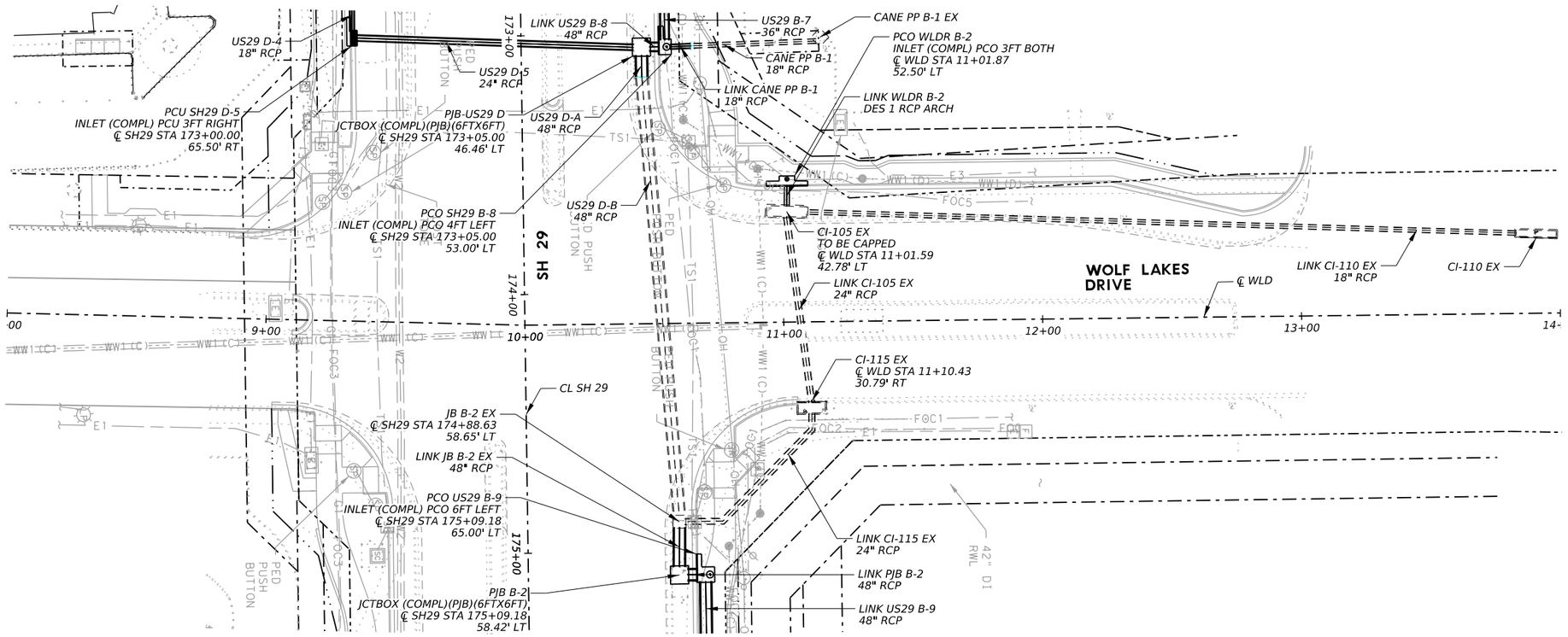

LEGEND

- EXIST PROPERTY LINE
- EXIST ROW
- EXIST PUBLIC UTILITY EASEMENT
- PROP ROW
- TEMP CONSTRUCTION EASEMENT
- PROP PUBLIC UTILITY EASEMENT
- EXISTING CAST IN PLACE INLET
- EXISTING PRECAST INLET
- PROPOSED PRECAST INLET
- PIPE REMOVAL
- INLET REMOVAL

NOTES:

1. SEE PCO AND PCU STANDARDS FOR INLET CONTROL POINT.
2. MANHOLE/JUNCTION CONTROL POINTS ARE THE TOP CENTER OF MANHOLE/JUNCTION
3. PROPOSED PIPE LIMITS ARE SHOWN FROM INSIDE WALL TO INSIDE WALL BETWEEN STRUCTURES AND LENGTHS ROUNDED TO THE NEAREST WHOLE NUMBER.
4. ALL EXISTING OFFSETS/ELEVATIONS ARE FROM AVAILABLE AS-BUILTS AND SURVEY INFORMATION AND ARE FOR CONTRACTORS INFORMATION ONLY. ANY PROPOSED TIE-INS TO EXISTING STORM SEWER TO BE VERIFIED BY THE CONTRACTOR.

0' 25' 50' HORZ
0' 2.5' 5' VERT

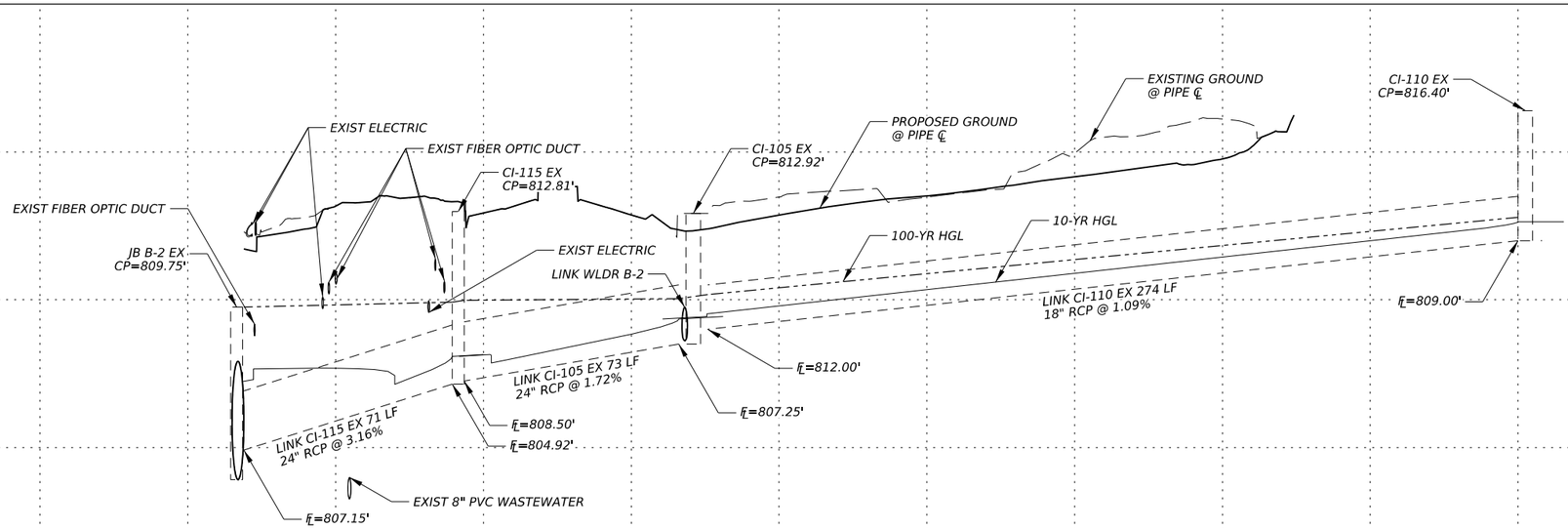

SYSTEM B

STATE OF TEXAS
MICHAEL CURL
126986
LICENSED PROFESSIONAL ENGINEER
9/24/2025

GEORGETOWN TEXAS
more than welcome

THE ESTES GROUP
TBPE FIRM REG. NO. F-20926

Texas Department of Transportation

SH 29
WOLF LAKES DRIVE
DRAINAGE PLAN & PROFILE
BEGIN TO END

SHEET 1 OF 1

CONT	SECT	JOB	HIGHWAY
0337	01	053	SH 29
DIST	COUNTY		SHEET NO.
AUS	WILLIAMSON		133

DATE: 9/24/2025 10:39:16 AM
FILE: pw://kh-pw.bentley.com:kh-pw-01/Documents/01 Active Projects/TX-GEO-069284005 - SH 29 Widening/4 - Design/Plan Set/5. Drainage/DRN Layouts/WLD DRN-1.dgn

NOTES:

1. PROPOSED PIPE LIMITS ARE SHOWN FROM INSIDE WALL TO INSIDE WALL BETWEEN STRUCTURES AND LENGTHS ROUNDED UP.

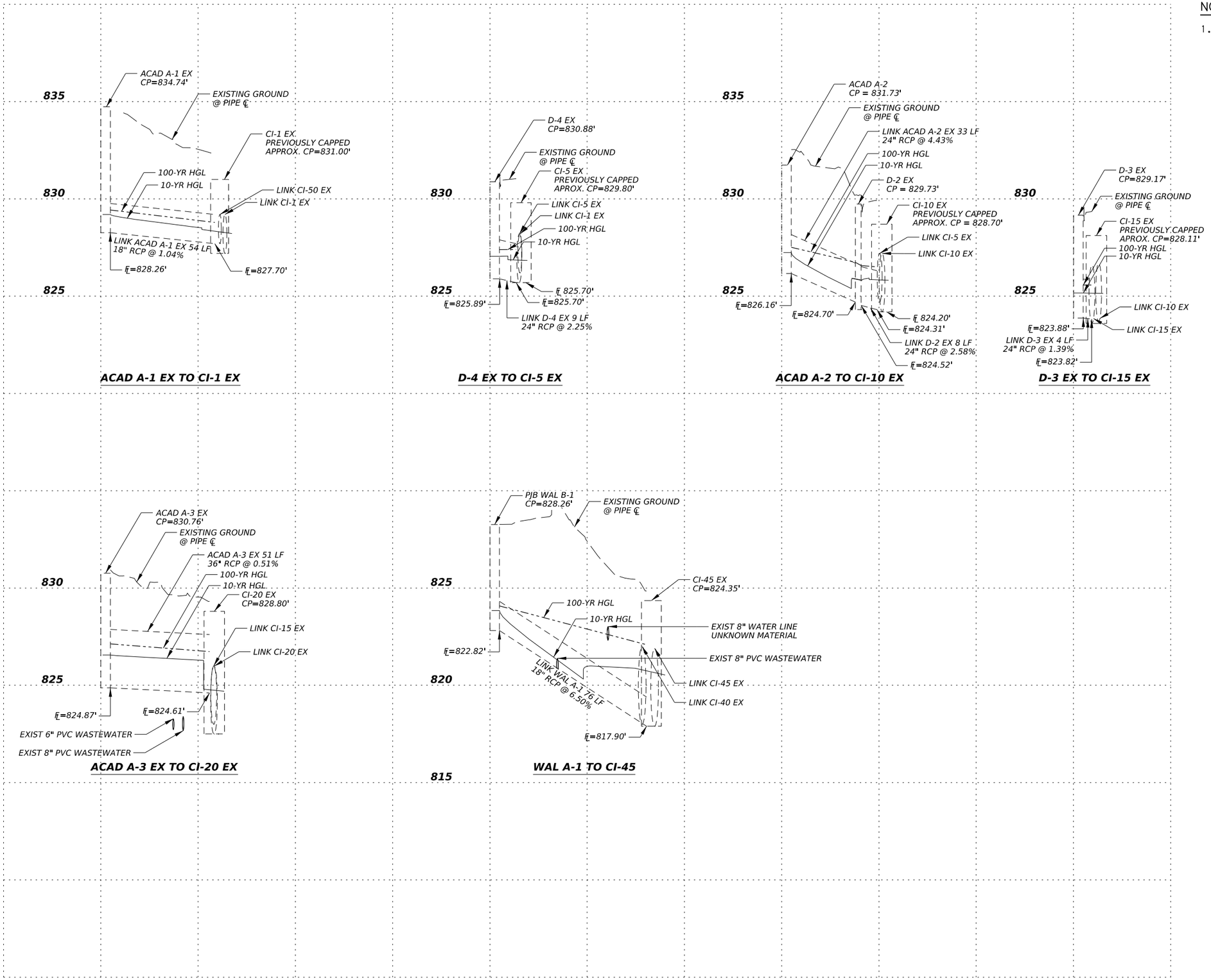

0' 2.5' 5' VERT

STATE OF TEXAS
MICHAEL CURL
126986
LICENSED
PROFESSIONAL ENGINEER

9/24/2025

GEORGETOWN
TEXAS
more than welcome

TEG
THE ESTES GROUP
TBPE FIRM REG. NO. F-20926

Texas Department of Transportation

SH 29

DRAINAGE PROFILES

SHEET 1 OF 3

CONT	SECT	JOB	HIGHWAY
0337	01	053	SH 29
DIST		COUNTY	SHEET NO.
AUS		WILLIAMSON	134

DATE: 9/24/2025 10:39:36 AM
FILE: pw://kh-pw.bentley.com:kh-pw-01/Documents/01 Active Projects/TX-GEO-069284005 - SH 29 Widening/4 - Design/Plan Set/5. Drainage/DRN Layouts/SH29 DRN-PROF1.dgn

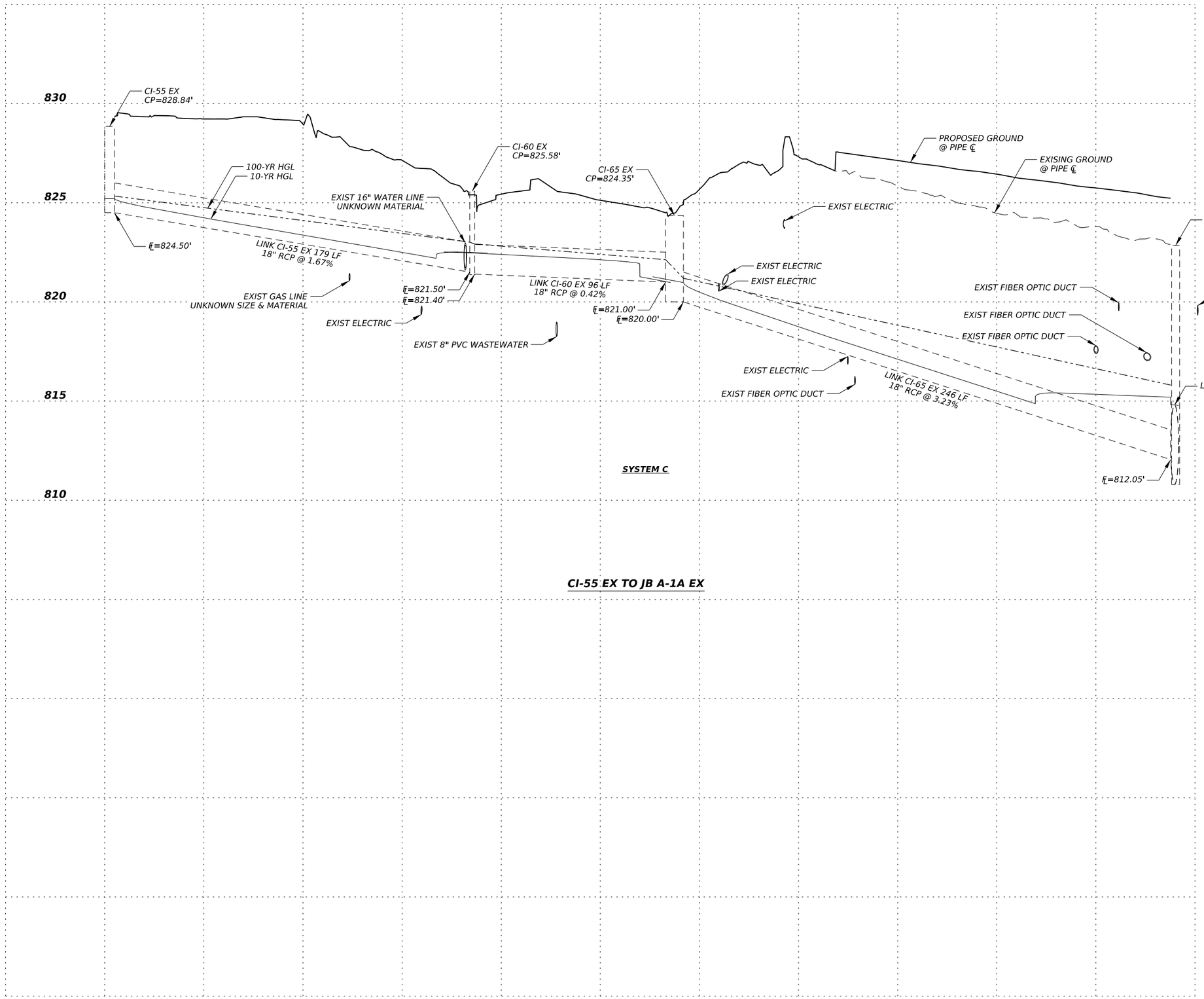

NOTES:

1. PROPOSED PIPE LIMITS ARE SHOWN FROM INSIDE WALL TO INSIDE WALL BETWEEN STRUCTURES AND LENGTHS ROUNDED UP.

0' 2.5' 5' VERT

STATE OF TEXAS
MICHAEL CURL
126986
LICENSED
PROFESSIONAL ENGINEER

9/24/2025

GEORGETOWN
TEXAS
more than welcome

TEG
THE ESTES GROUP
TBPE FIRM REG. NO. F-20926

Texas Department of Transportation

SH 29

DRAINAGE PROFILES

SHEET 2 OF 3

CONT	SECT	JOB	HIGHWAY
0337	01	053	SH 29
DIST		COUNTY	SHEET NO.
AUS		WILLIAMSON	135

DATE: 9/24/2025 10:39:56 AM
FILE: pw://kh-pw.bentley.com:kh-pw-01/Documents/01 Active Projects/TX-GEO-069284005 - SH 29 Widening/4 - Design/Plan Set/5. Drainage/DRN Layouts/SH29 DRN-PROF2.dgn

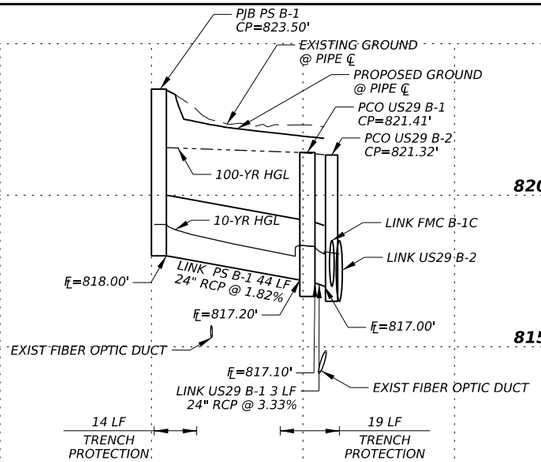

PJB PS B-1 TO PCO US29 B-2

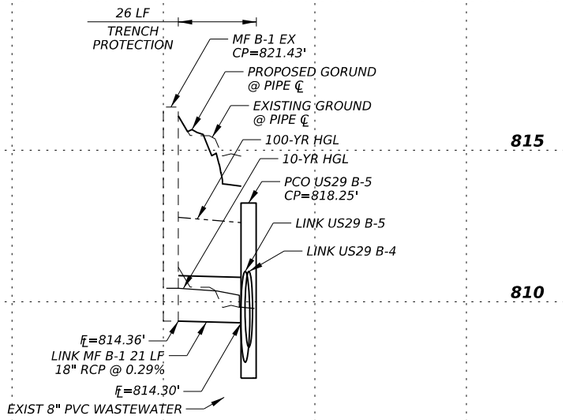

MF B-1 EX TO PCO US29 B-5

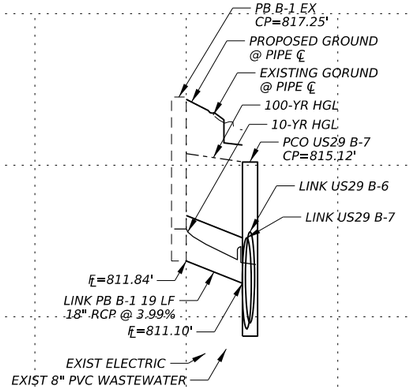

PB B-1 EX TO PCO US29 B-7

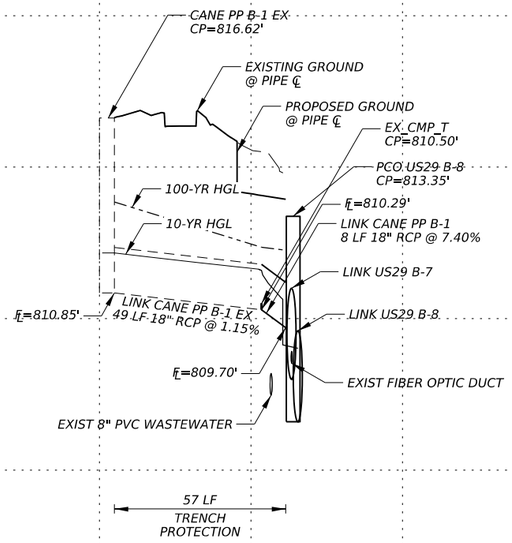

CANE PP B-1 TO PCO US29 B-8

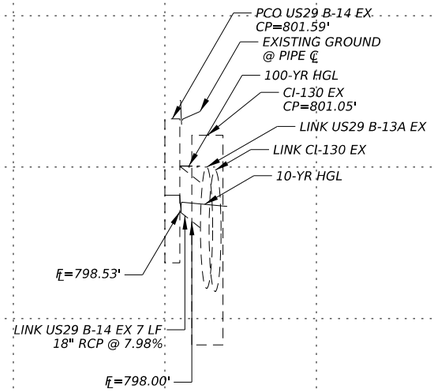

PCO US29 B-14 EX TO CI-130 EX

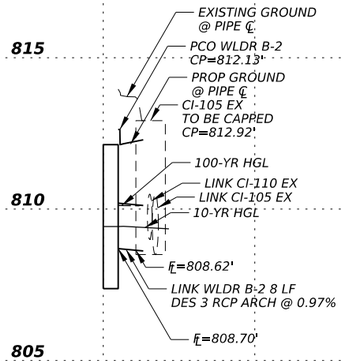

PCO WLDR B-2 TO CI-105 EX

NOTES:

1. PROPOSED PIPE LIMITS ARE SHOWN FROM INSIDE WALL TO INSIDE WALL BETWEEN STRUCTURES AND LENGTHS ROUNDED UP.

0' 2.5' 5' VERT

STATE OF TEXAS
MICHAEL CURL
126986
LICENSED
PROFESSIONAL ENGINEER

9/24/2025

GEORGETOWN TEXAS
more than welcome

THE ESTES GROUP
TBPE FIRM REG. NO. F-20926

Texas Department of Transportation

SH 29

DRAINAGE PROFILES

SHEET 3 OF 3

CONT	SECT	JOB	HIGHWAY
0337	01	053	SH 29
DIST	COUNTY		SHEET NO.
AUS	WILLIAMSON		136

DATE: 9/24/2025 10:40:16 AM
FILE: pw://kh-pw.bentley.com:kh-pw-01/Documents/01 Active Projects/TX-GEO-069284005 - SH 29 Widening/4 - Design/Plan Set/5. Drainage/DRN Layouts/SH29 DRN-PROF3.dgn

CAP FOR A CURB INLET

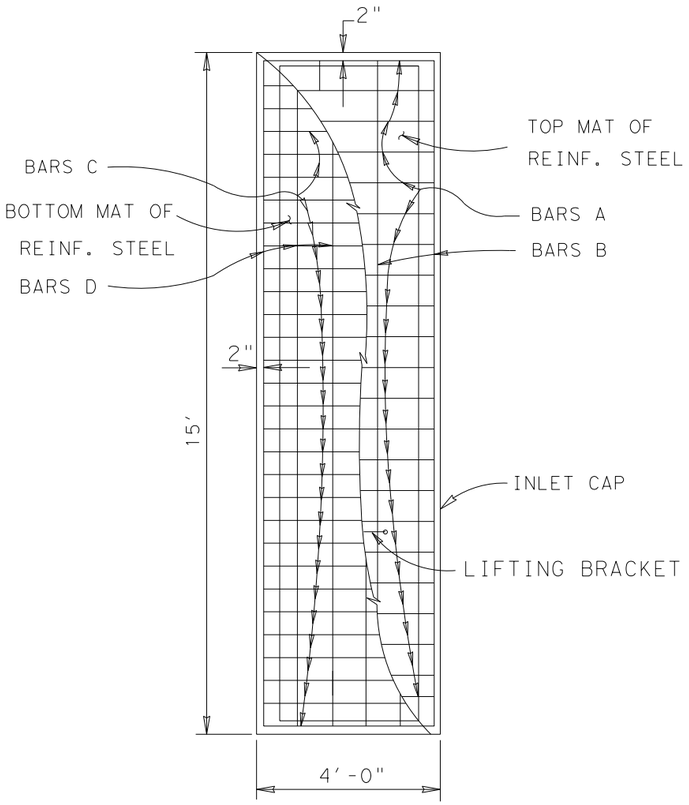

REINFORCING STEEL				
BAR	NO.	SIZE	SPAC.	LEN.
A	24	4	7"	3'-8"
B	4	4	1'-2"	14'-8"
C	19	6	9"	3'-8"
D	9	4	6"	14'-8"

CAP FOR A CURB INLET

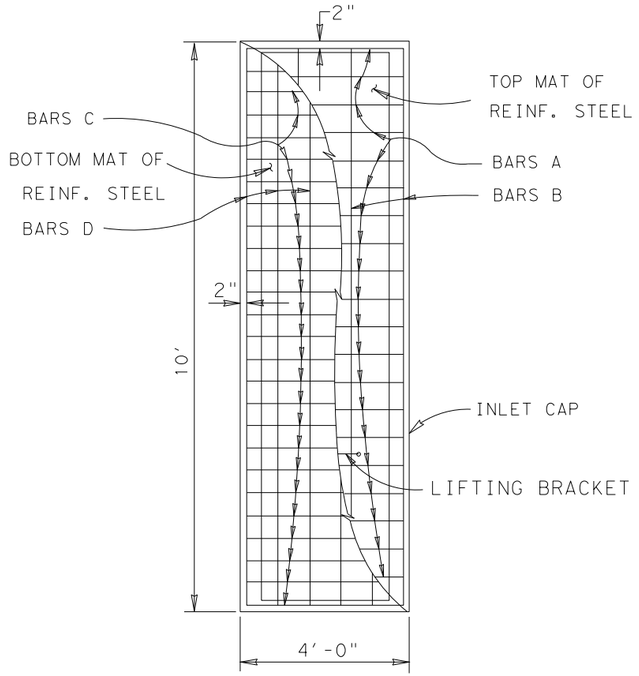

REINFORCING STEEL				
BAR	NO.	SIZE	SPAC.	LEN.
A	24	4	7"	3'-8"
B	4	4	1'-2"	9'-8"
C	19	6	9"	3'-8"
D	9	4	6"	9'-8"

STATE OF TEXAS
MICHAEL CURL
126986
LICENSED
PROFESSIONAL ENGINEER

Michael Curl

9/24/2025

GEORGETOWN
TEXAS
more than welcome

THE ESTES GROUP
TBPE FIRM REG. NO. F-20926

Texas Department of Transportation

SH 29

DRAINAGE DETAILS

SHEET 1 OF 1

CONT	SECT	JOB	HIGHWAY
0337	01	053	SH 29
DIST	COUNTY		SHEET NO.
AUS	WILLIAMSON		137

DW: CK: DW: CK:

DATE: 9/24/2025 10:40:36 AM
FILE: pw://kh-pw.bentley.com:kh-pw-01/Documents/01 Active Projects/TX-GEO-069284005 - SH 29 Widening/4 - Design/Plan Set/5. Drainage/DRN Detail/Capping Inlet Detail

DISCLAIMER:
The use of this standard is governed by the "Texas Engineering Practice Act". No warranty of any kind is made by TxDOT for any purpose whatsoever. TxDOT assumes no responsibility for the conversion of this standard to other formats or for incorrect results or damages resulting from its use.

DATE:
FILE:

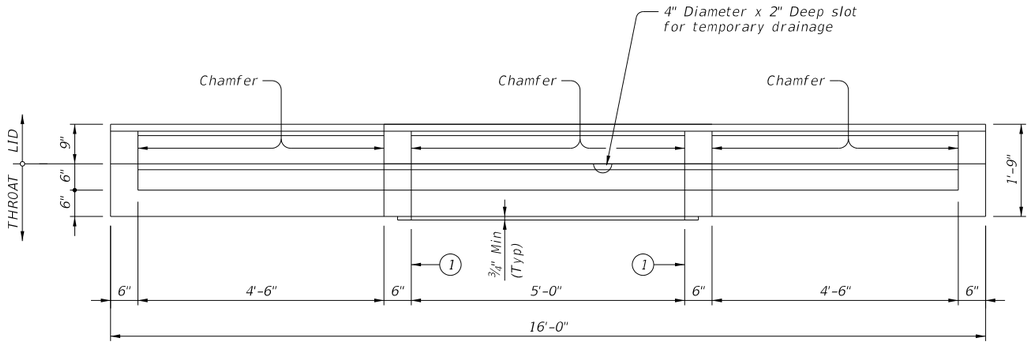

FRONT VIEW

(Showning left and right extensions)

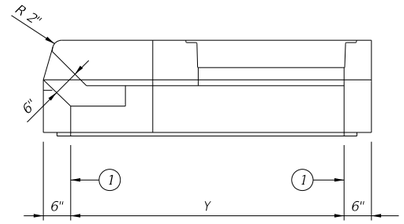

RIGHT VIEW

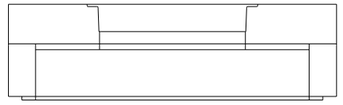

REAR VIEW

(Extensions not shown)

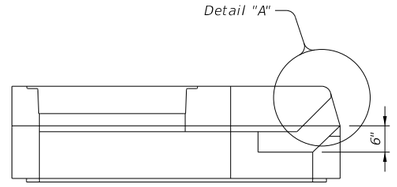

LEFT VIEW

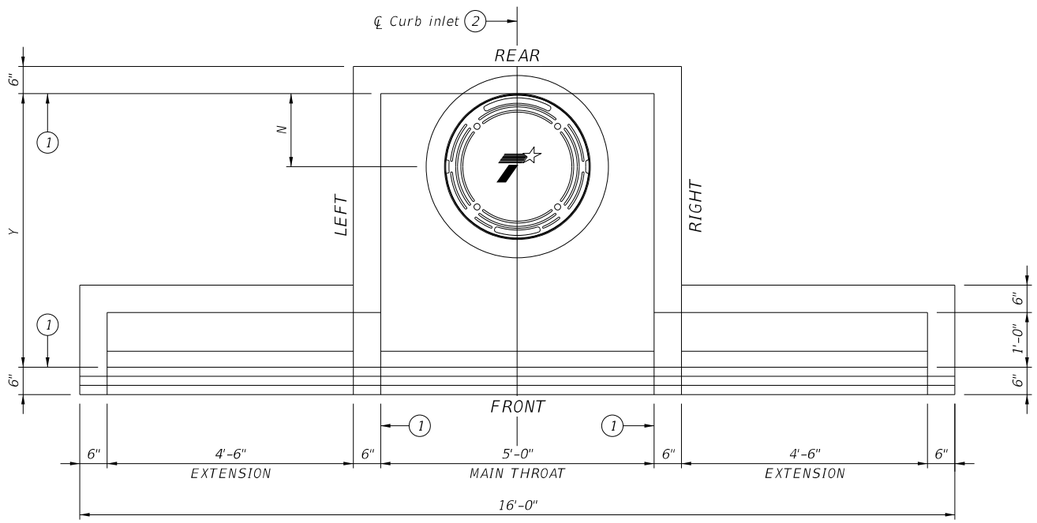

PLAN VIEW

(Showning left and right extensions)

1. Matches inside face of wall of precast base or riser below inlet.
2. Reference point is located where the ℄ of the main throat intersects the normal gutter line. See Curb and Gutter Transition Details for PCO Inlet (CGT-PCO) standard for more information.

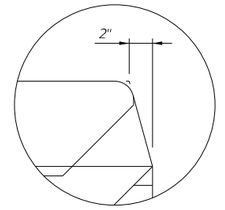

DETAIL "A"

HS20 LOADING

Texas Department of Transportation

Bridge Division Standard

PRECAST CURB INLET OUTSIDE ROADWAY

PCO

FILE:	DN: TxDOT	CK: TxDOT	DW: TxDOT	CK: TxDOT
©TxDOT February 2020	CONT	SECT	JOB	HIGHWAY
REVISIONS	0337	01	053	SH 29
06-2023: Added reference point.	DIST	COUNTY		SHEET NO.
	AUS	WILLIAMSON		138

DISCLAIMER:
The use of this standard is governed by the "Texas Engineering Practice Act". No warranty of any kind is made by TxDOT for any purpose whatsoever. TxDOT assumes no responsibility for the conversion of this standard to other formats or for incorrect results or damages resulting from its use.

DATE:
FILE:

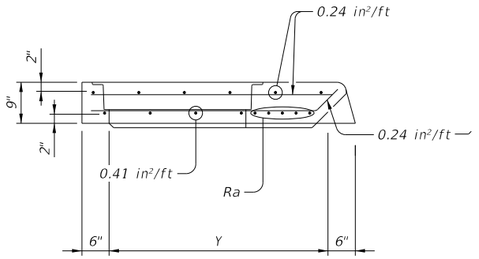

LID SECTION A-A

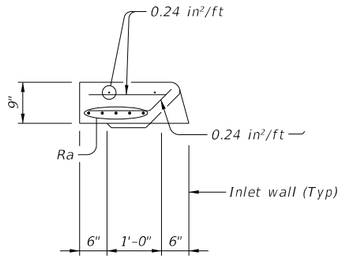

LID SECTION B-B

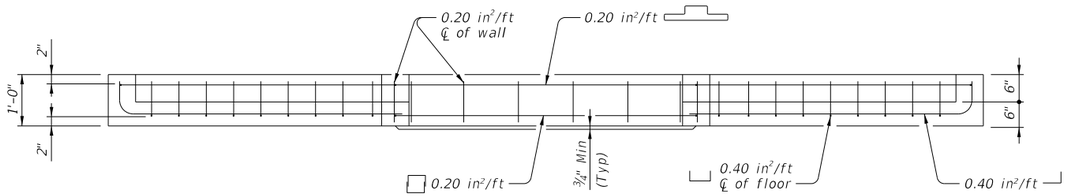

THROAT ELEVATION VIEW

(Showning left and right extensions)

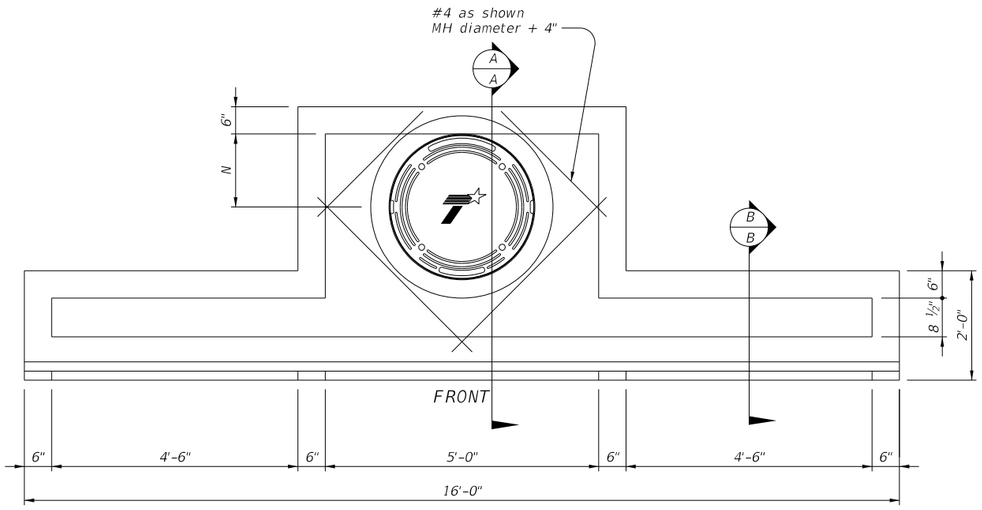

LID PLAN VIEW

(Showning left and right extensions)

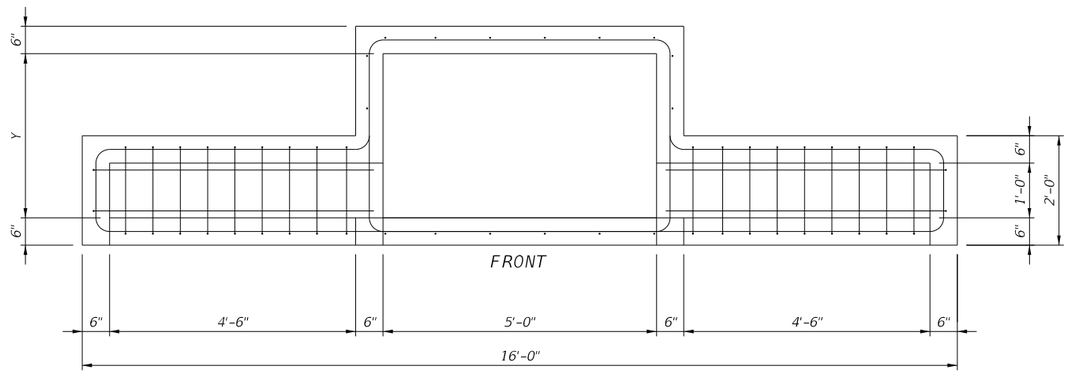

THROAT PLAN VIEW

(Showning left and right extensions)

FABRICATION NOTES:

1. Provide Class "H" concrete in accordance with Item 421 and having a minimum compressive strength of 5,000 psi.
2. Provide Grade 60 reinforcing steel or equivalent area of WWR.
3. Extensions may be right, left, both or none. Provide extensions as specified elsewhere in the plans.
4. Design tongue and groove joints for full closure on both shoulders. Minimum spigot depth is ¾". Lid may employ a butt joint with dowels at the Contractor's option.
5. Provide lifting devices in conformance with Manufacturer's recommendations.
6. Provide cast iron solid cover, unless noted otherwise elsewhere in the plans.
7. Chamfer vertical edges of inlet lid ¾" as shown in Front View, sheet 1.

INSTALLATION NOTES:

1. Inlet throat and lid are not intended for direct traffic. Do not place in roadway.
2. Seal tongue and groove joints and butt joints with preformed or bulk mastic in conformance with Manufacturer's recommendations. Tongue and groove joints may be grouted no more than 1" between each section, or ½ the joint depth, whichever is greater.
3. Do not grout rubber gasket joints without Manufacturer's recommendation.

GENERAL NOTES:

1. Designed according to ASTM C913.
2. Open area of main throat = 360 sq in. Open area of one extension throat = 324 sq in.
3. Payment for inlet is per Item 465, "Junction Boxes, Manholes, and Inlets" by type, size, and extension placement. Extensions are subsidiary to inlet.

Cover dimensions are clear dimensions, unless noted otherwise.

Size (Y)	N	MH Dia*	Ra
3'	9"	18"	(4) #5 Additional
4'	16"	32"	(4) #5 Additional
5'	16"	32"	(4) #5 Additional
6'	16"	32"	(4) #5 Additional

*Nominal ring and cover size.

HS20 LOADING SHEET 2 OF 2

Texas Department of Transportation

Bridge Division Standard

PRECAST CURB INLET OUTSIDE ROADWAY

PCO

FILE:	DN: TxDOT	CK: TxDOT	DW: TxDOT	CK: TxDOT
©TxDOT February 2020	CONT	SECT	JOB	HIGHWAY
REVISIONS	0337	01	053	SH 29
06-2023: Added reference point.	DIST	COUNTY		SHEET NO.
	AUS	WILLIAMSON		139

DISCLAIMER:
The use of this standard is governed by the "Texas Engineering Practice Act." No warranty of any kind is made by TxDOT for any purpose whatsoever. TxDOT assumes no responsibility for the conversion of this standard to other formats or for incorrect results or damages resulting from its use.

DATE:
FILE:

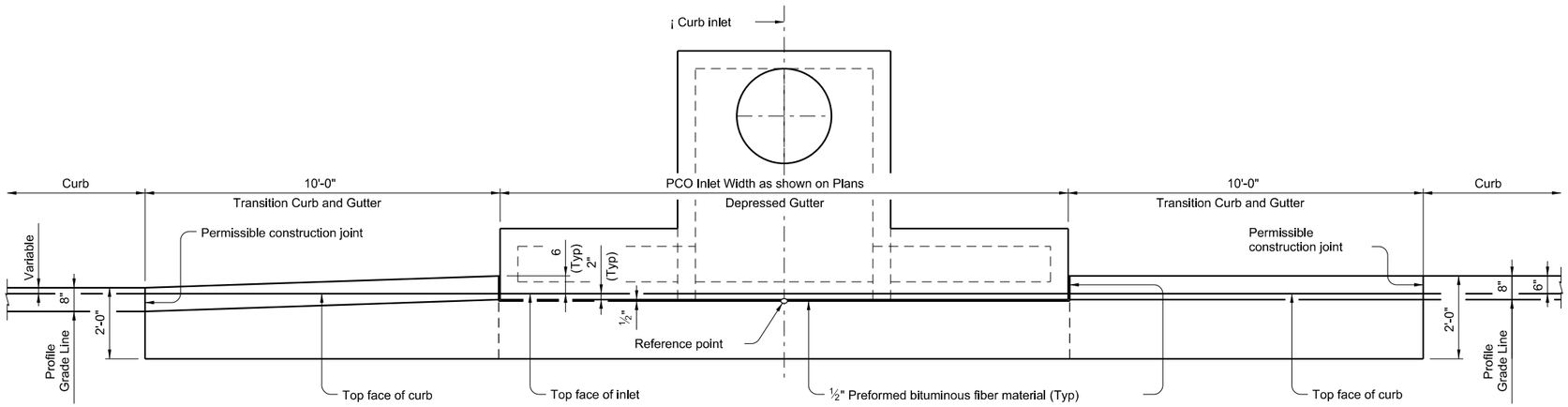

SHOWING TYPE **I**, **II**a & **III** Curb and Gutter

SHOWING TYPE II & **I**V Curb and Gutter

PLAN

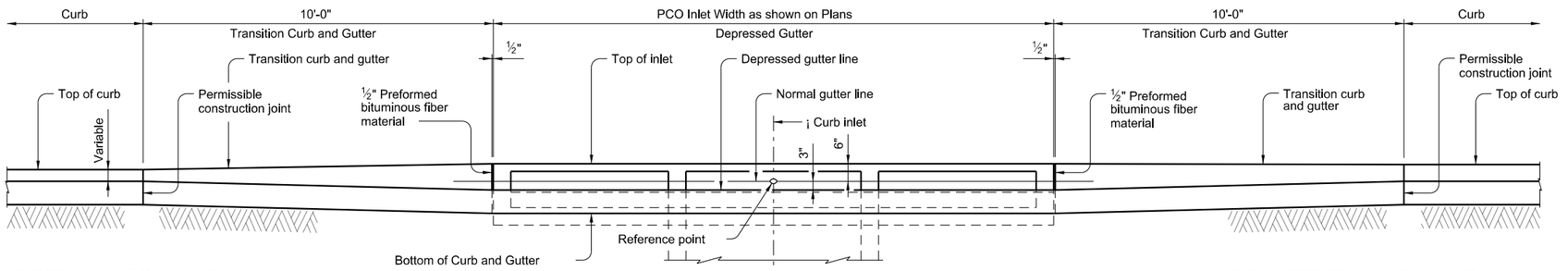

SHOWING TYPE **I**, **II**a & **III** Curb and Gutter

SHOWING TYPE II & **I**V Curb and Gutter

ELEVATION

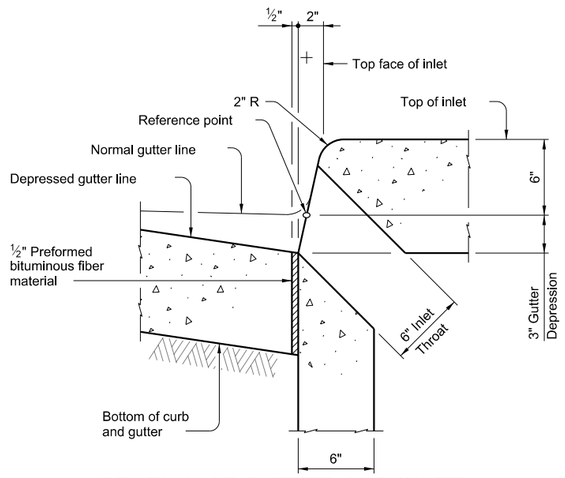

SECTION AT GUTTER AND INLET

(Reinforcing steel not shown for clarity.)

CONSTRUCTION NOTES:
Align top face of curb with PCO Inlet as shown.

MATERIAL NOTES:
Provide ½" preformed bituminous fiber material.

GENERAL NOTES:
Reference point is located where the ¡ of the main throat intersects the normal gutter line.
See Precast Curb Inlet Outside Roadway (PCO) standard for details and notes not shown.
See Concrete Curb and Curb and Gutter (CCCG-22) standard for details and notes not shown.
Curb and Gutter Transitions is paid for and in accordance with Item 529, "Concrete Curb, Gutter, and Combined Curb and Gutter."
Preformed bituminous fiber material is subsidiary to PCO Inlet.

Texas Department of Transportation

Bridge Division Standard

CURB AND GUTTER TRANSITION DETAILS FOR PCO INLET

CGT-PCO

FILE: CD-CGT-PCO-23.dgn	DN: TxDOT		CK: AES	DW: JTR		CK: AES
©TxDOT February 2020	CONT	SECT	JOB		HIGHWAY	
REVISIONS	0337	01	053		SH 29	
06-2023: Added reference point.	DIST	COUNTY			SHEET NO.	
	AUS	WILLIAMSON			140	

DISCLAIMER:
The use of this standard is governed by the "Texas Engineering Practice Act." No warranty of any kind is made by TxDOT for any purpose whatsoever. TxDOT assumes no responsibility for the conversion of this standard to other formats or for incorrect results or damages resulting from its use.

DATE:
FILE:

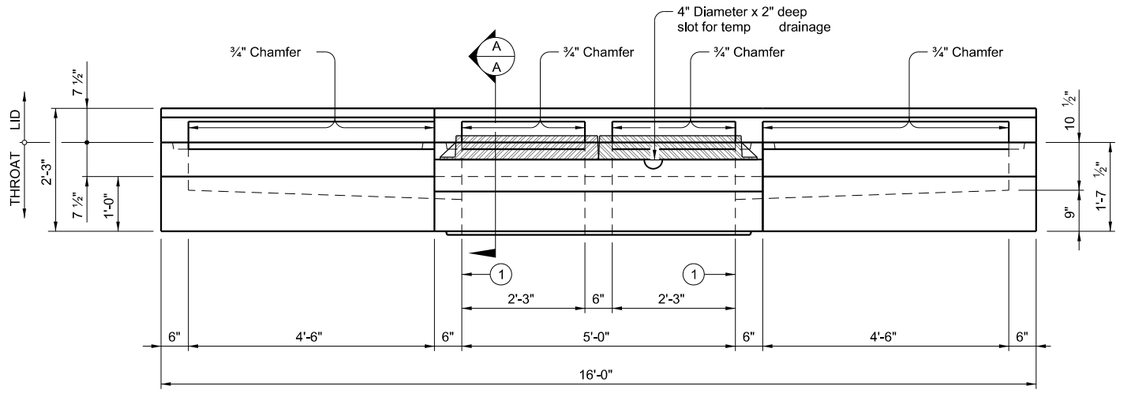

FRONT VIEW

(Showing left and right extensions)

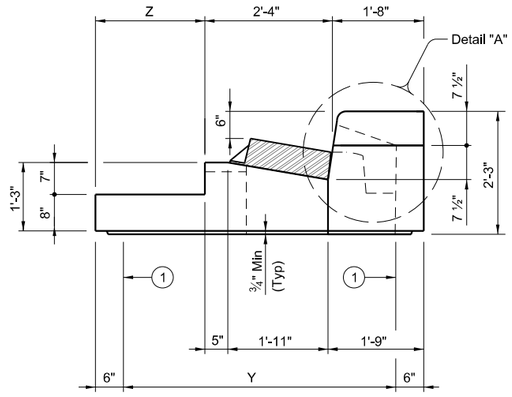

SECTION A-A

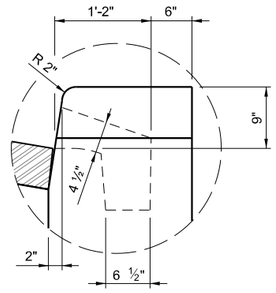

DETAIL "A"

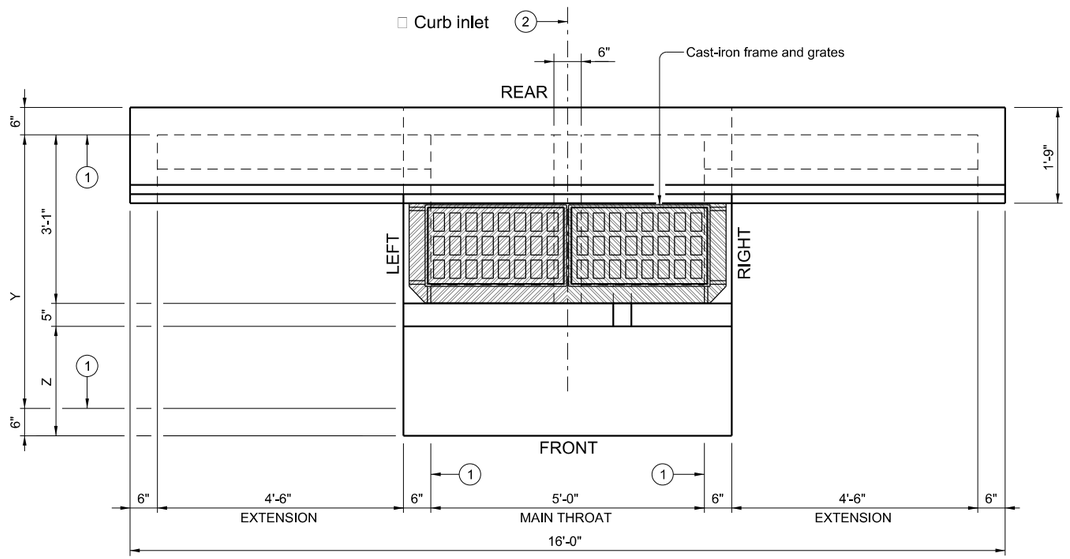

PLAN VIEW

(Showing left and right extensions)

TABLE OF VARIABLE DIMENSIONS	
Size (Y)	Z
3'	0'
4'	1'
5'	2'
6'	3'

(1) Matches inside face of wall of precast base or riser below inlet.

(2) Reference point is located where the ¡ of the main throat intersects the normal gutter line. See Curb and Gutter Transition Details for PCO Inlet (CGT-PCO) standard for more information.

HS20 LOADING

SHEET 1 OF 2

Texas Department of Transportation

Bridge Division Standard

PRECAST CURB INLET UNDER ROADWAY

PCU

FILE: CD-PCU-23.dgn	DN: TxDOT	CK: TxDOT	DW: TxDOT	CK: TxDOT
©TxDOT February 2020	CONT	SECT	JOB	HIGHWAY
REVISIONS	0337	01	053	SH 29
06-2023: Added reference point.	DIST	COUNTY		SHEET NO.
	AUS	WILLIAMSON		141

DISCLAIMER:
The use of this standard is governed by the "Texas Engineering Practice Act." No warranty of any kind is made by TxDOT for any purpose whatsoever. TxDOT assumes no responsibility for the conversion of this standard to other formats or for incorrect results or damages resulting from its use.

DATE:
FILE:

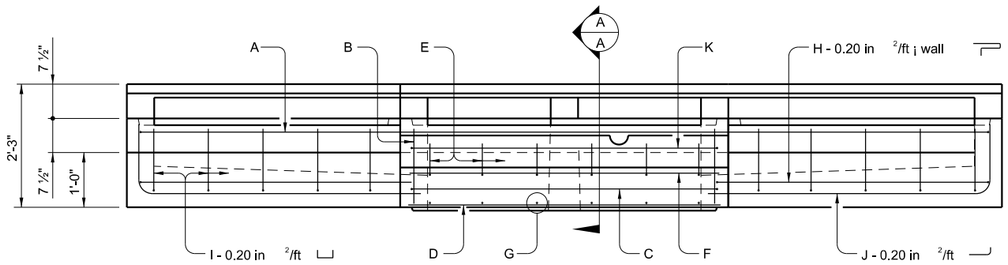

FRONT VIEW
(Showing left and right extensions)

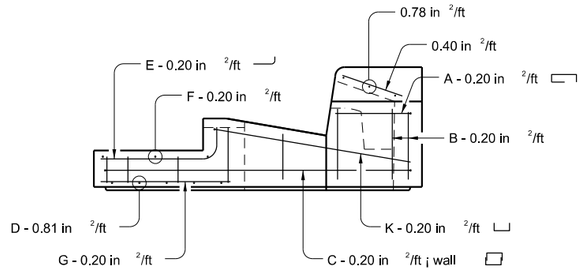

SECTION A-A

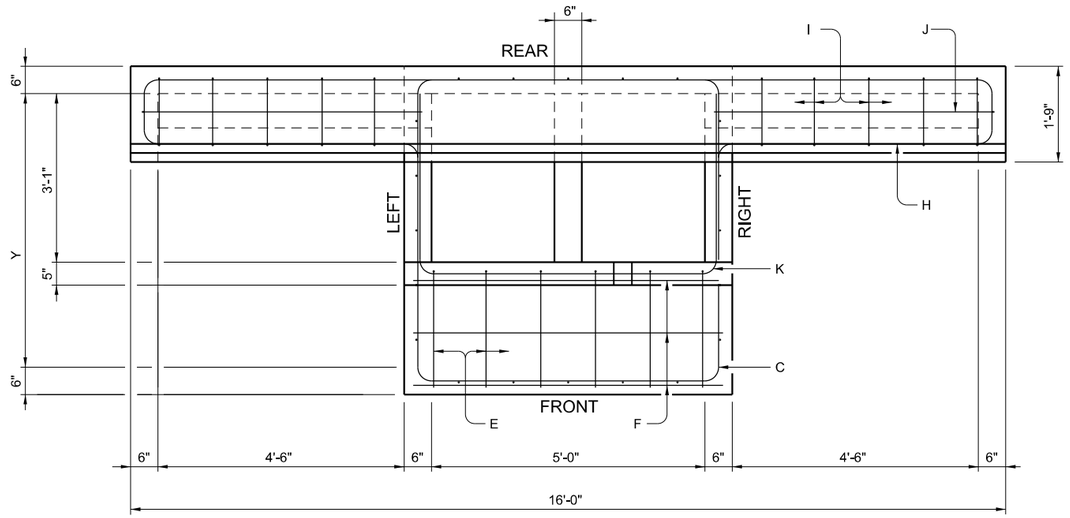

PLAN VIEW
(Showing left and right extensions)

FABRICATION NOTES:
1. Provide Class "H" concrete in accordance with Item 421 and having a minimum compressive strength of 5,000 psi.
2. Provide Grade 60 reinforcing steel or equivalent area of WWR.
3. Provide typical clear cover of 1 ½" to reinforcing steel from surface of concrete or lower outside shoulder.
4. Extensions may be right, left, both or none. Provide extensions as specified elsewhere in plans.
5. Design tongue and groove joints for full closure on both shoulders. Minimum spigot depth is ¾". Top slab may employ a butt joint with dowels at the Contractor's option.
6. Provide lifting devices in conformance with Manufacturer's recommendations.
7. Chamfer vertical edges on inlet lid ¾" as shown in Front View, sheet 1.

INSTALLATION NOTES:
1. Inlet throat is placed under roadway and intended for direct traffic. Inlet lid is not for direct traffic. Do not place Inlet lid in roadway.
2. Seal tongue and groove joints and butt joints with preformed or bulk mastic in conformance with Manufacturer's recommendations. Tongue and groove joints may be grouted no more than 1" between each section, or ½ the joint depth, whichever is greater.
3. Do not grout rubber gasket joints without Manufacturer's recommendation.

GENERAL NOTES:
1. Designed according to ASTM C913.
2. Open area of main throat = 324 sq in. Open area of one extension throat = 324 sq in.
3. Payment for inlet is per Item 465, "Junction Boxes, Manholes and Inlets" by type, size and extension placement. Extensions are subsidiary to inlet.

HS20 LOADING

Texas Department of Transportation

Bridge Division Standard

PRECAST CURB INLET UNDER ROADWAY

PCU

FILE: CD-PCU-23.dgn	DN: TxDOT	CK: TxDOT	DW: TxDOT	CK: TxDOT			
©TxDOT February 2020	CONT	SECT	JOB	HIGHWAY			
REVISIONS	0337	01	053	SH 29			
06-2023: Added reference point.	DIST	COUNTY		SHEET NO.			
	AUS	WILLIAMSON		142			

DISCLAIMER:
The use of this standard is governed by the "Texas Engineering Practice Act." No warranty of any kind is made by TxDOT for any purpose whatsoever. TxDOT assumes no responsibility for the conversion of this standard to other formats or for incorrect results or damages resulting from its use.

DATE:
FILE:

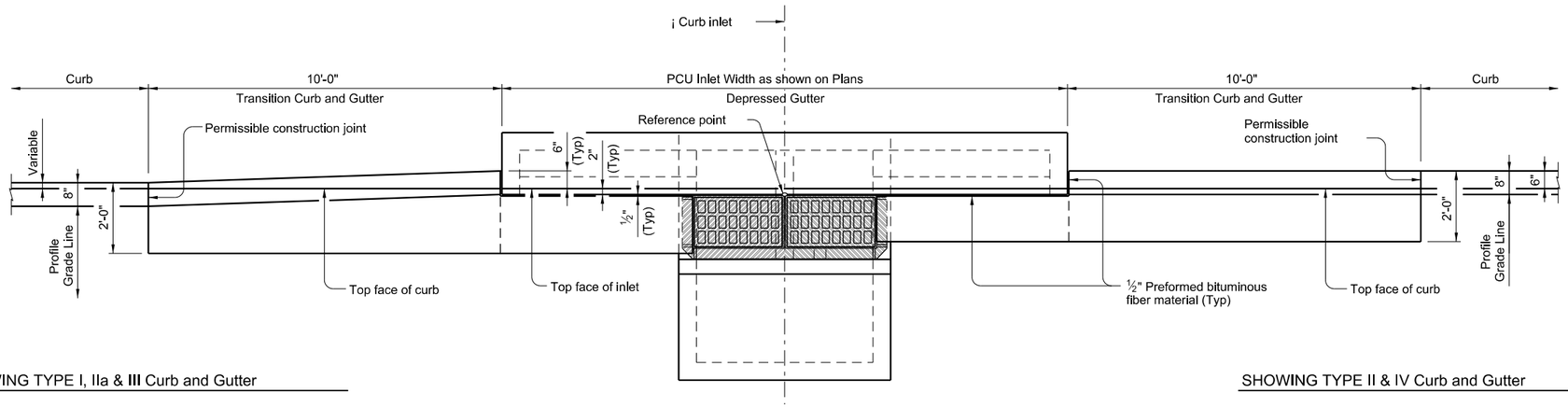

SHOWING TYPE I, IIa & **III** Curb and Gutter

SHOWING TYPE II & IV Curb and Gutter

PLAN

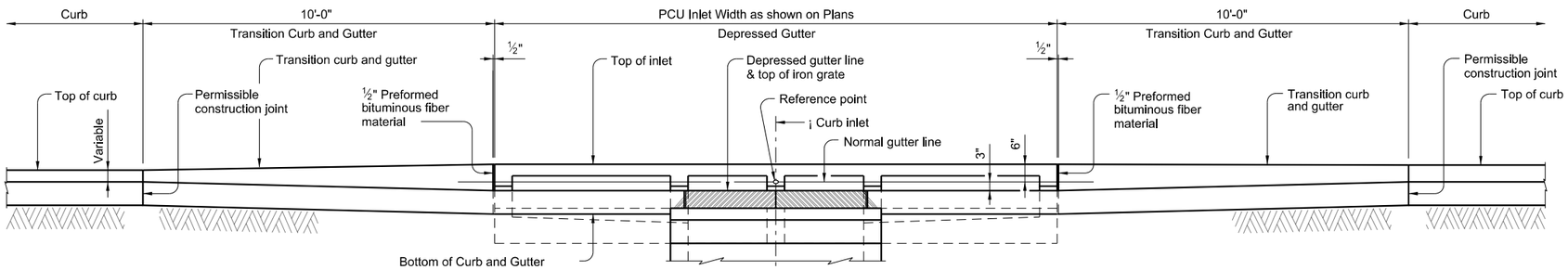

SHOWING TYPE I, IIa & **III** Curb and Gutter

SHOWING TYPE II & IV Curb and Gutter

ELEVATION

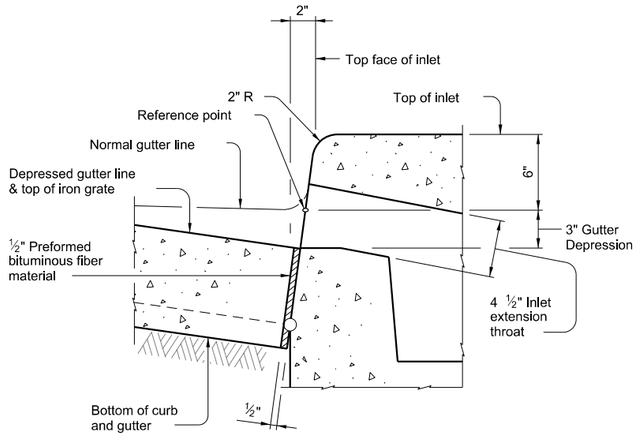

SECTION AT GUTTER AND INLET

(Reinforcing steel not shown for clarity.)

CONSTRUCTION NOTES:
Align top face of curb with PCU Inlet as shown.

MATERIAL NOTES:
Provide ½" Preformed Bituminous Fiber Material.

GENERAL NOTES:
Reference point is located where the ¡ of the main throat intersects the normal gutter line.
See Precast Curb Inlet Under Roadway standard PCU for details and notes not shown.
See Concrete Curb and Curb and Gutter standard CCCG-22 for details and notes not shown.
Curb and Gutter Transitions is paid for and in accordance with Item 529, "Concrete Curb, Gutter, and Combined Curb and Gutter."
Preformed Bituminous Fiber Material is subsidiary to PCU Inlet.

Texas Department of Transportation

Bridge Division Standard

CURB AND GUTTER TRANSITION DETAILS FOR PCU INLET

CGT-PCU

FILE: CD-CGT-PCU-23.dgn	DN: TxDOT	CK: AES	DW: JTR	CK: AES
©TxDOT February 2020	CONT	SECT	JOB	HIGHWAY
REVISIONS	0337	01	053	SH 29
06-2023: Added reference point.	DIST	COUNTY		SHEET NO.
	AUS	WILLIAMSON		143

DISCLAIMER:
The use of this standard is governed by the "Texas Engineering Practice Act". No warranty of any kind is made by TxDOT for any purpose whatsoever. TxDOT assumes no responsibility for the conversion of this standard to other formats or for incorrect results or damages resulting from its use.

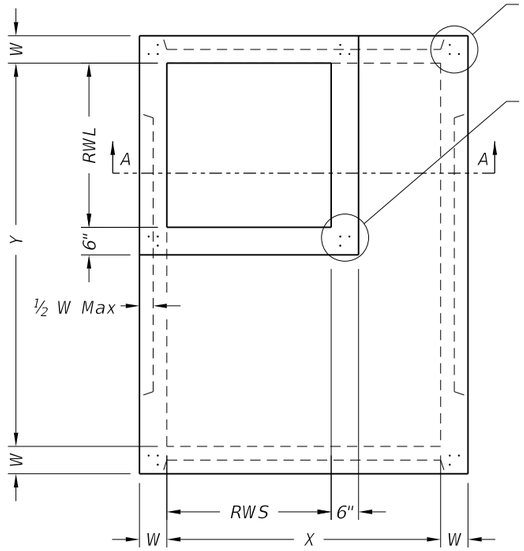

PLAN VIEW "A"

SQUARE REDUCED RISER OPTION

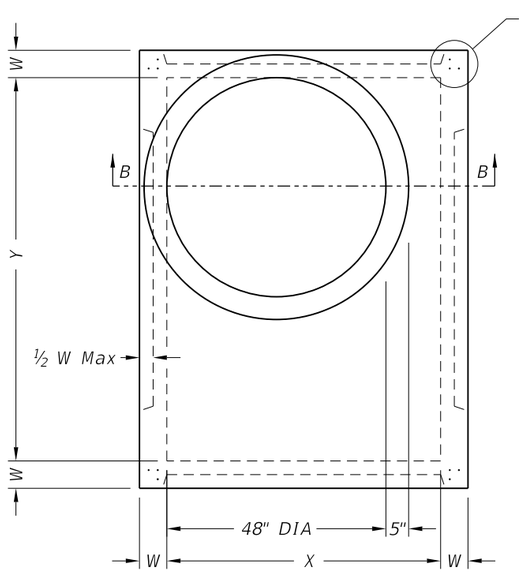

PLAN VIEW "B"

ROUND REDUCED RISER OPTION

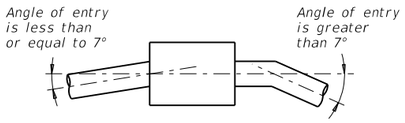

PIPE CONNECTION DETAIL

Connect pipes within 7° of normal to PB wall.
If necessary, use pipe elbow or curved
approach alignment to stay within this limit.

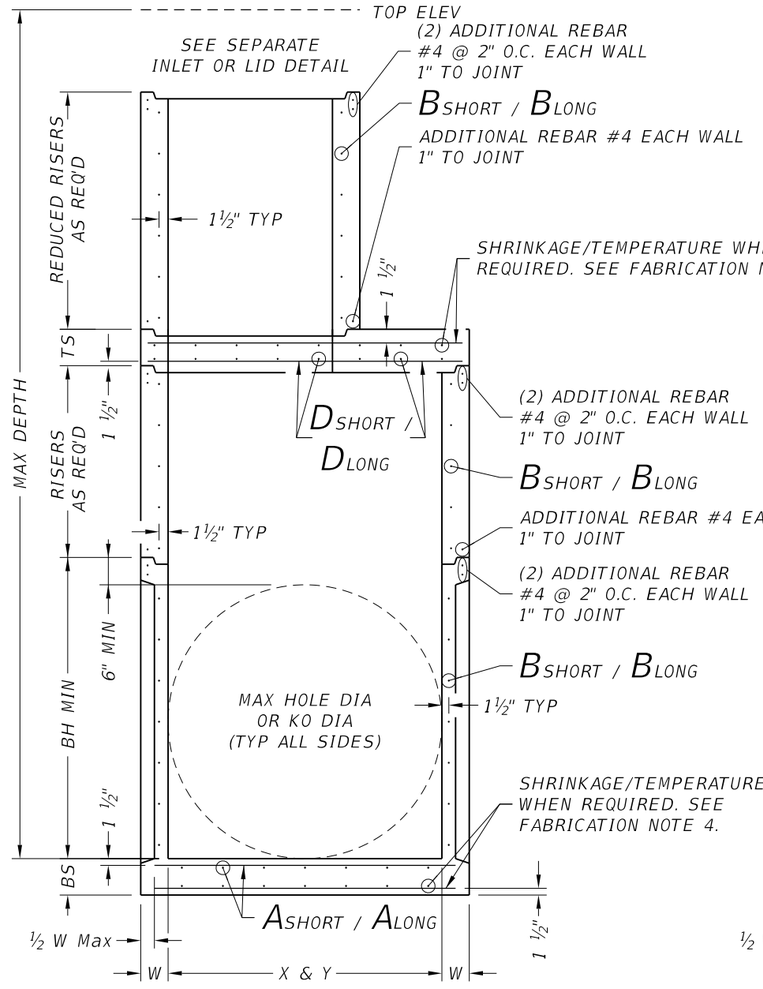

SECTION A-A

SQUARE REDUCED RISER OPTION

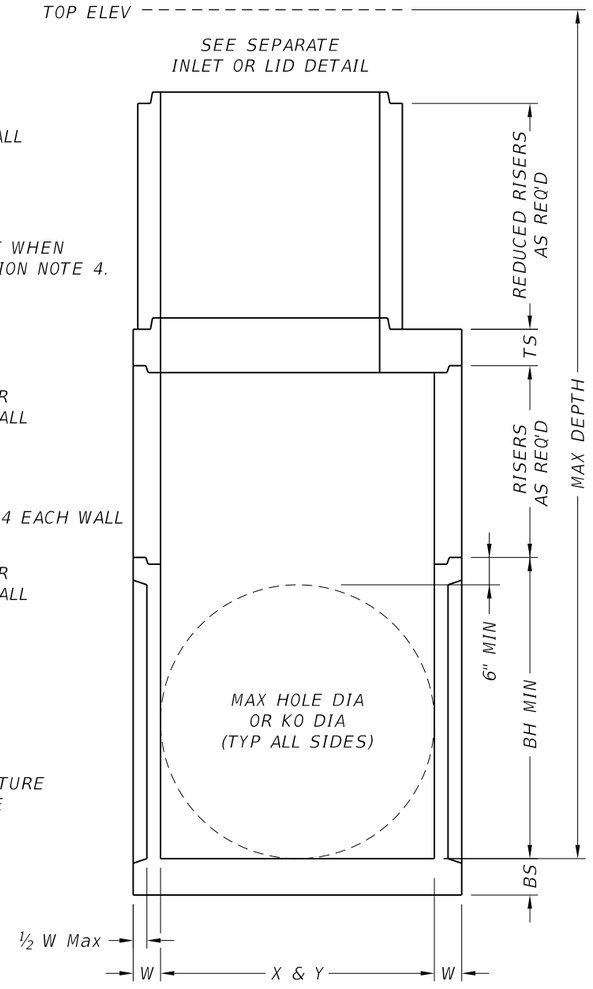

SECTION B-B

ROUND REDUCED RISER OPTION

FABRICATION NOTES:

1. Provide Class "H" concrete in accordance with Item 421 and having a minimum compressive strength of 5,000 psi.
2. Provide Grade 60 reinforcing steel or equivalent area of WWR.
3. Provide typical clear cover of 1 ½" to reinforcing steel at interior or exterior walls.
4. Walls or slabs with a thickness of 8" or greater require shrinkage and temperature reinforcing steel. Provide steel area = 0.11 in²/ft each way.
5. No substitution is allowed for vertical and horizontal #4 bars in corners.
6. Manufacture base and risers to nearest 3" increment.
7. Design tongue and groove joints for full closure on both shoulders. Minimum spigot depth is ¾".
8. Provide lifting devices in conformance with Manufacturer's recommendations.
9. See sheet PDD for sizes, dimensions, and reinforcing steel not shown.

Cover dimensions are clear dimensions, unless noted otherwise.

INSTALLATION NOTES:

1. If required elsewhere. Inverts (benching) to be provided by Contractor. Concrete or mortar used for invert is subsidiary to specified inlet or manhole.
2. Seal tongue and groove joints with preformed or bulk mastic in conformance with Manufacturer's recommendations. Tongue and groove joints may be grouted no more than 1" between each section, or ½ the joint depth, whichever is greater.
3. Do not grout rubber gasket joints without Manufacturer's recommendation.
4. For rigid pipe, cut hole in thin wall panel (KO) 4" Max, 2" Min larger than pipe OD.
5. For flexible pipe, consult boot/seal Manufacturer's specification for placement tolerance and hole size. Center pipe in hole and install boot/seal per Manufacturer's specification.

GENERAL NOTES:

1. Precast Base consists of base slab, base unit, risers (as required), reducing slab (as required), and reduced risers (as required). See sheet PDD for sizes.
2. Designed according to ASTM C913.
3. Payment for precast base is subsidiary to the specified inlet, per Item 465, "Junction Boxes, Manholes, and Inlets."

HL93 LOADING

Texas Department of Transportation

Bridge Division Standard

PRECAST BASE

PB

FILE: Precast Base.dgn	DN: TxDOT	CK: TxDOT	DW: TxDOT	CK: TxDOT
©TxDOT February 2020	CONT	SECT	JOB	HIGHWAY
REVISIONS	0337	01	053	SH 29
	DIST	COUNTY		SHEET NO.
	AUS	WILLIAMSON		144

DATE:
FILE:

DISCLAIMER:
The use of this standard is governed by the "Texas Engineering Practice Act." No warranty of any kind is made by TxDOT for any purpose whatsoever. TxDOT assumes no responsibility for the conversion of this standard to other formats or for incorrect results or damages resulting from its use.

DATE: 9/24/2025 10:43:38 AM
FILE: pw://kh-pw.bentley.com:kh-pw-01/Documents/01 Active Projects/TX-GEO-069284005 - SH 29 Widening/4 - Design/Plan Set/5. Drainage/STD/Pipe and Box Grouted Connections.dgn

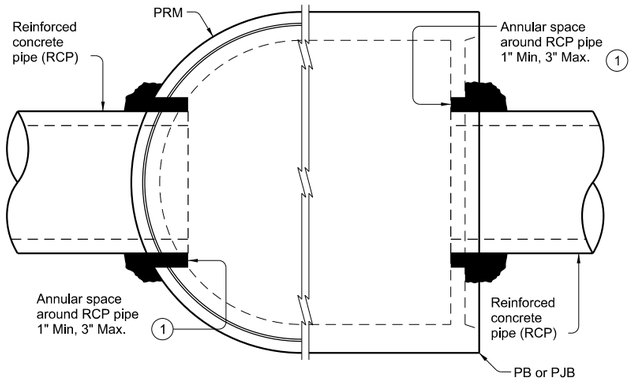

PRECAST ROUND MANHOLE (PRM) WITH THROUGH-HOLE

PRECAST BASE (PB) OR PRECAST JUNCTION BOX (PJB) WITH THIN-WALL KNOCK-OUT

TYPICAL HALF PLAN

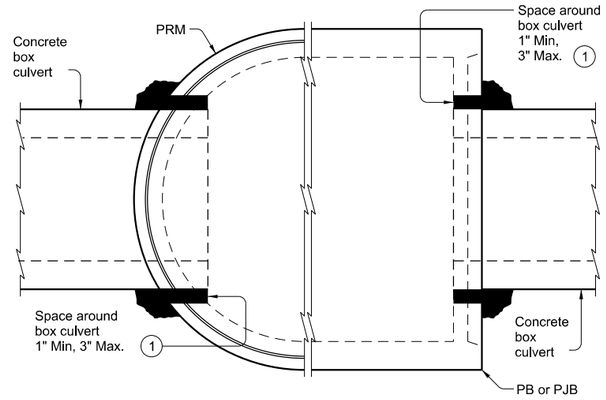

PRECAST ROUND MANHOLE (PRM) WITH THROUGH-HOLE

PRECAST BASE (PB) OR PRECAST JUNCTION BOX (PJB) WITH THIN-WALL KNOCK-OUT

TYPICAL HALF PLAN

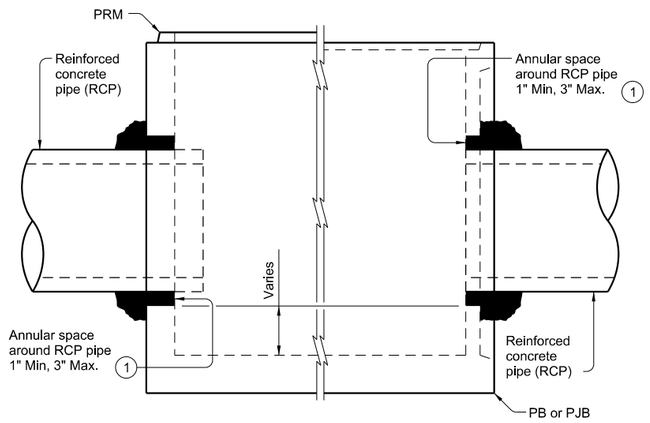

PRECAST ROUND MANHOLE (PRM) WITH THROUGH-HOLE

PRECAST BASE (PB) OR PRECAST JUNCTION BOX (PJB) WITH THIN-WALL KNOCK-OUT

TYPICAL HALF ELEVATION

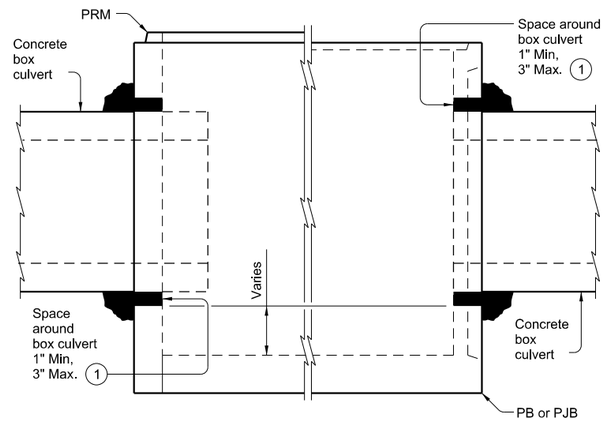

PRECAST ROUND MANHOLE (PRM) WITH THROUGH-HOLE

PRECAST BASE (PB) OR PRECAST JUNCTION BOX (PJB) WITH THIN-WALL KNOCK-OUT

TYPICAL HALF ELEVATION

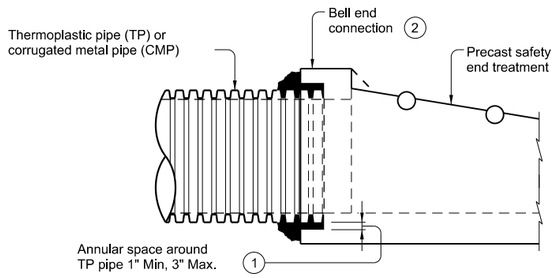

TYPICAL PARTIAL ELEVATION OF PRECAST SAFETY END TREATMENTS

Showing square PSET for parallel drainage, cross drainage shown similar.

(1) Completely fill the void between the precast structure and the connecting pipe or box with cementitious grouts and mortars in accordance with DMS-4675 "Cementitious Grouts and Mortars for Miscellaneous Application."

(2) For thermoplastic pipe, do not use bell or spigot for grouted connections. Remove the bell or spigot from the pipe by cutting between two exterior corrugations of the pipe before connecting and grouting the thermoplastic pipe to the structure.

CONSTRUCTION NOTES:

Do not grout rubber gasket joints without Manufacturer's recommendations.

Do not use bricks, masonry blocks, native stone, or similar materials in conjunction with grouted connections when filling void spaces around pipes or box culverts.

MATERIAL NOTES:

Provide grouted connections in accordance with DMS-4675, "Cementitious Grouts and Mortars for Miscellaneous Application."

GENERAL NOTES:

See applicable standards for notes and details not shown:
- Precast Base (PB)
- Precast Junction Box (PJB)
- Precast Round Manhole (PRM)
- Precast Safety End Treatments C/D Square (PSET-SC)
- Precast Safety End Treatments P/D Square (PSET-SP)

Provide Concrete Box Culverts in accordance with Item 462, "Concrete Box Culverts and Drains."

Provide Reinforced Concrete Pipe (RCP) in accordance with Item 464, "Reinforced Concrete Pipe."

Provide Thermoplastic Pipe (TP) in accordance with Item 468, "Thermoplastic Pipe Culverts and Drains".

Payment for grouted connections is considered subsidiary to other bid items.

Texas Department of Transportation

Bridge Division Standard

PIPE AND BOX GROUTED CONNECTIONS
FOR PRECAST STRUCTURES

PBGC

FILE: CD-PBGC-24.DGN	DN: TxDOT	CK: TAR	DW: JTR	CK: TAR
©TxDOT February 2020	CONT	SECT	JOB	HIGHWAY
REVISIONS	0337	01	053	SH 29
06-2024: Updated notes.	DIST	COUNTY		SHEET NO.
	AUS	WILLIAMSON		145

	Size	MAX DEPTH = 15 ft. to top of BASE SLAB										MAX DEPTH = 25 ft. to top of BASE SLAB										Min Height (See Gen Note 3)	Max HOLE DIA (See Fab Note 2)	Max KO DIA (See Fab Note 2)
		Base Slab			Base Unit or Riser Walls			Below Grade Slab (w/PJB) Reducing Slab (w/PB)				Base Slab			Base Unit or Riser Walls			Below Grade Slab (w/PJB) Reducing Slab (w/PB)						
		Short Span Reinf Steel Area	Long Span Reinf Steel Area	Thickness	Short Span Reinf Steel Area	Long Span Reinf Steel Area	Thickness	Reduced Riser Size	Short Span Reinf Steel Area	Long Span Reinf Steel Area	Thickness	Short Span Reinf Steel Area	Long Span Reinf Steel Area	Thickness	Short Span Reinf Steel Area	Long Span Reinf Steel Area	Thickness	Reduced Riser Size	Short Span Reinf Steel Area	Long Span Reinf Steel Area	Thickness			
	X x Y	Ashort	Along	BS	Bshort	Blong	W	RWSxRWL or ID	Dshort	Dlong	TS	Ashort	Along	BS	Bshort	Blong	W	RWSxRWL or ID	Dshort	Dlong	TS	BH MIN	HOLE DIA	KO DIA
	ft.	in^2/ft	in^2/ft	in.	in^2/ft	in^2/ft	in.	ft. **	in^2/ft	in^2/ft	in.	in^2/ft	in^2/ft	in.	in^2/ft	in^2/ft	in.	ft. **	in^2/ft	in^2/ft	in.	ft.	in.	in.
Precast Junction Box (PJB)	3x3	0.23	0.23	6	0.19	0.19	6	N/A	0.37	0.37	9	0.29	0.29	6	0.24	0.24	6	N/A	0.37	0.37	9	3.5	36	36
	4x4	0.29	0.29	6	0.24	0.24	6	N/A	0.41	0.41	9	0.47	0.47	6	0.38	0.38	6	N/A	0.41	0.41	9	4.5	48	48
	3x5	0.29	0.18	6	0.19	0.35	6	N/A	0.48	0.48	9	0.39	0.18	6	0.23	0.59	6	N/A	0.48	0.48	9	3.5	36/60	36/60
	4x5	0.36	0.18	6	0.22	0.34	6	N/A	0.42	0.42	9	0.53	0.26	6	0.39	0.59	6	N/A	0.42	0.42	9	4.5	48/60	48/60
	5x5	0.36	0.36	6	0.34	0.34	6	N/A	0.43	0.43	9	0.62	0.62	6	0.59	0.59	6	N/A	0.43	0.43	9	5.5	60	60
	5x6	0.27	0.27	9	0.34	0.45	6	N/A	0.48	0.48	9	0.47	0.45	9	0.38	0.54	8	N/A	0.48	0.48	9	5.5	60/72	60/72
	6x6	0.27	0.27	9	0.45	0.45	6	N/A	0.56	0.56	9	0.52	0.52	9	0.54	0.54	8	N/A	0.56	0.56	9	6.5	72	72
	8x8	0.46	0.46	9	0.51	0.51	8	N/A	0.45	0.45	12	0.87	0.87	9	0.59	0.59	10	N/A	0.45	0.45	12	8.5	96	72
Precast Base (PB)	3x3	0.23	0.23	6	0.19	0.19	6	N/A	N/A	N/A	N/A	0.29	0.29	6	0.24	0.24	6	N/A	N/A	N/A	N/A	3.5	36	36
	4x4	0.29	0.29	6	0.24	0.24	6	N/A	N/A	N/A	N/A	0.47	0.47	6	0.38	0.38	6	N/A	N/A	N/A	N/A	4.5	48	48
	3x5	0.29	0.18	6	0.19	0.35	6	3x3	0.30	0.34	9	0.39	0.18	6	0.23	0.59	6	3x3	0.40	0.40	9	3.5	36/60	36/60
	4x5	0.36	0.18	6	0.22	0.34	6	3x3	0.30	0.30	9	0.53	0.26	6	0.39	0.59	6	3x3	0.46	0.37	9	4.5	48/60	48/60
	4x5	0.36	0.18	6	0.22	0.34	6	4x4	0.30	0.30	9	0.53	0.26	6	0.39	0.59	6	4x4	0.39	0.39	9	4.5	48/60	48/60
	4x5	0.36	0.18	6	0.22	0.34	6	48"	0.39	0.39	9	0.53	0.26	6	0.39	0.59	6	48"	0.47	0.47	9	4.5	48/60	48/60
	4x5	0.36	0.18	6	0.22	0.34	6	3x5	0.33	0.40	9	0.53	0.26	6	0.39	0.59	6	3x5	0.48	0.48	9	4.5	48/60	48/60
	5x5	0.36	0.36	6	0.34	0.34	6	3x3	0.34	0.34	9	0.62	0.62	6	0.59	0.59	6	3x3	0.53	0.53	9	5.5	60	60
	5x5	0.36	0.36	6	0.34	0.34	6	4x4	0.36	0.36	9	0.62	0.62	6	0.59	0.59	6	4x4	0.64	0.64	9	5.5	60	60
	5x5	0.38	0.38	6	0.34	0.34	6	48"	0.36	0.36	9	0.62	0.62	6	0.59	0.59	6	48"	0.64	0.64	9	5.5	60	60
	5x5	0.36	0.36	6	0.34	0.34	6	3x5	0.34	0.40	9	0.62	0.62	6	0.59	0.59	6	3x5	0.53	0.53	9	5.5	60	60
	5x6	0.31	0.31	9	0.34	0.45	6	3x3	0.34	0.34	9	0.47	0.45	9	0.38	0.54	8	3x3	0.61	0.50	9	5.5	60/72	60/72
	5x6	0.27	0.27	9	0.34	0.45	6	4x4	0.36	0.45	9	0.47	0.45	9	0.38	0.54	8	4x4	0.74	0.57	9	5.5	60/72	60/72
	5x6	0.29	0.29	9	0.34	0.45	6	48"	0.36	0.45	9	0.47	0.45	9	0.38	0.54	8	48"	0.74	0.57	9	5.5	60/72	60/72
	5x6	0.29	0.29	9	0.34	0.45	6	3x5	0.45	0.45	9	0.47	0.45	9	0.38	0.54	8	3x5	0.61	0.61	9	5.5	60/72	60/72
	6x6	0.29	0.29	9	0.45	0.45	6	3x3	0.41	0.41	9	0.52	0.52	9	0.54	0.54	8	3x3	0.74	0.74	9	6.5	72	72
	6x6	0.27	0.27	9	0.45	0.45	6	4x4	0.45	0.45	9	0.52	0.52	9	0.54	0.54	8	4x4	0.87	0.87	9	6.5	72	72
	6x6	0.29	0.29	9	0.45	0.45	6	48"	0.45	0.45	9	0.52	0.52	9	0.54	0.54	8	48"	0.87	0.87	9	6.5	72	72
	6x6	0.29	0.29	9	0.45	0.45	6	3x5	0.45	0.45	9	0.52	0.52	9	0.54	0.54	8	3x5	0.87	0.87	9	6.5	72	72
	8x8	0.52	0.52	9	0.51	0.51	8	3x3	0.61	0.61	12	0.91	0.91	9	0.70	0.70	10	3x3	0.85	0.85	12	8.5	96	72
	8x8	0.52	0.52	9	0.51	0.51	8	4x4	0.70	0.70	12	0.87	0.87	9	0.70	0.70	10	4x4	1.01	1.01	12	8.5	96	72
	8x8	0.52	0.52	9	0.51	0.51	8	48"	0.70	0.70	12	0.87	0.87	9	0.70	0.70	10	48"	1.01	1.01	12	8.5	96	72
	8x8	0.52	0.52	9	0.51	0.51	8	3x5	0.70	0.85	12	0.87	0.87	9	0.70	0.70	10	3x5	1.01	1.01	12	8.5	96	72

** Unless otherwise indicated.

FABRICATION NOTES:
1. Maximum spacing of reinforcement is 8".
2. At manufacturer's option, provide cast or cored holes or thin wall panels (KO) to the maximum diameter shown for each. When no penetration is required, it is acceptable to provide a wall with no sectional reduction.

GENERAL NOTES:
1. Precast Junction Box consists of base slab, base unit, risers (as required), and below grade slab. See sheet PJB for details.
2. Precast Base consists of base slab, base unit, risers (as required), reducing slab (as required), and reduced risers (as required). See sheet PB for details.
3. Min Height shown is for stock base units. Use stock base units whenever practical. Smaller height base units can be used in special installation circumstances, when noted elsewhere in the plans. Absolute minimum height of base units is 2'-6".

HL93 LOADING

Texas Department of Transportation

Bridge Division Standard

DESIGN DATA FOR PRECAST BASE AND JUNCTION BOX

PDD

FILE: CD-PDD-20.dgn	DN: TxDOT	CK: TxDOT	DW: TxDOT	CK: TxDOT
©TxDOT February 2020	CONT	SECT	JOB	HIGHWAY
REVISIONS	0337	01	053	SH 29
	DIST	COUNTY		SHEET NO.
	AUS	WILLIAMSON		146

DISCLAIMER:
The use of this standard is governed by the "Texas Engineering Practice Act." No warranty of any kind is made by TxDOT for any purpose whatsoever. TxDOT assumes no responsibility for the conversion of this standard to other formats or for incorrect results or damages resulting from its use.

DATE:
FILE:

DISCLAIMER:
The use of this standard is governed by the "Texas Engineering Practice Act." No warranty of any kind is made by TxDOT for any purpose whatsoever. TxDOT assumes no responsibility for the conversion of this standard to other formats or for incorrect results or damages resulting from its use.

DATE:
FILE:

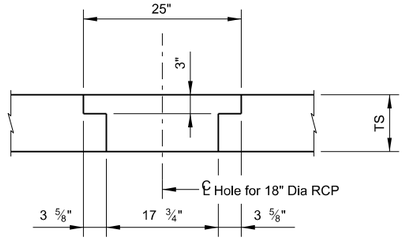

DETAIL "B"

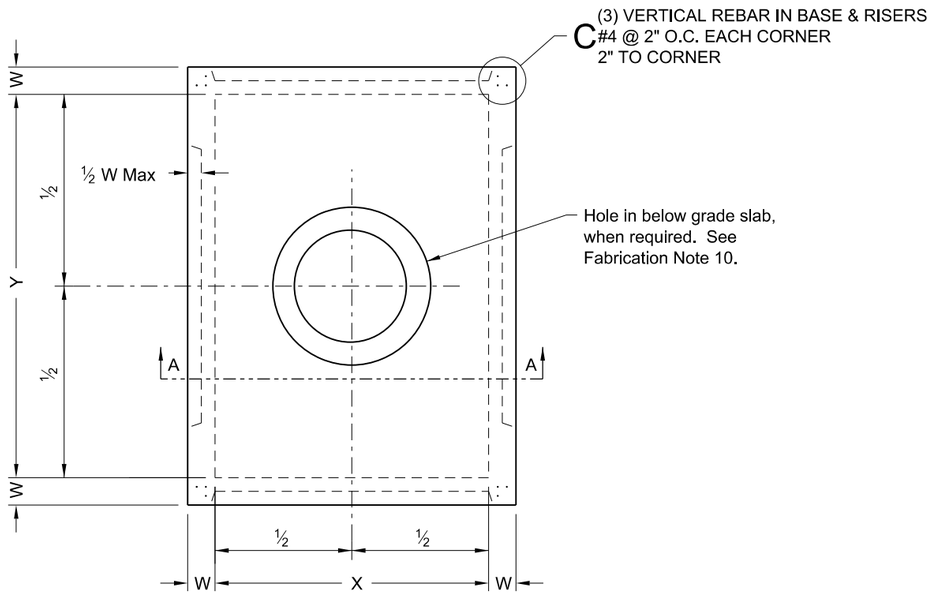

PLAN VIEW

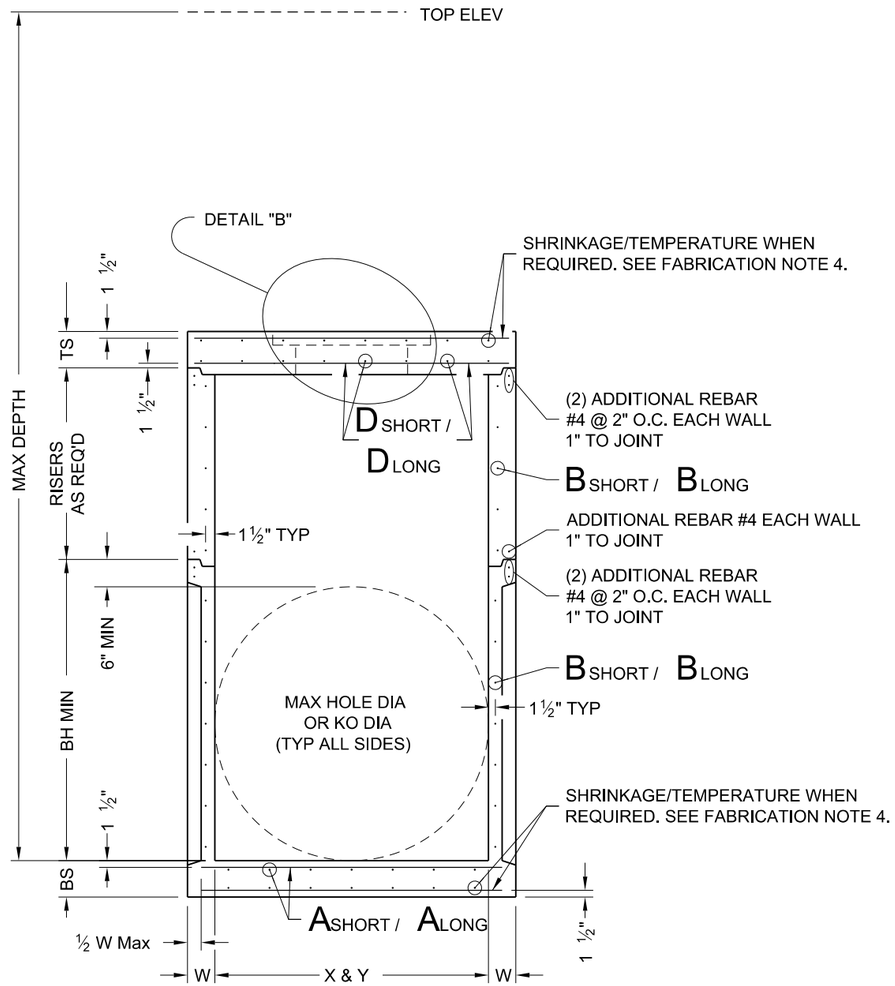

SECTION A-A

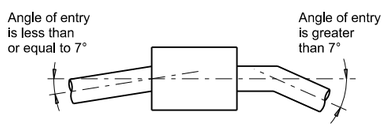

PIPE CONNECTION DETAIL

Connect pipes within 7° of normal to PJB wall.
If necessary, use pipe elbow or curved approach alignment to stay within this limit.

FABRICATION NOTES:

1. Provide Class "H" concrete in accordance with Item 421 and having a minimum compressive strength of 5,000 psi.
2. Provide Grade 60 reinforcing steel or equivalent area of WWR.
3. Provide typical clear cover of 1 ½" to reinforcing steel at interior or exterior walls.
4. Walls or slabs with a thickness of 8" or greater require shrinkage and temperature reinforcing steel. Provide steel area = 0.11 in²/ft each way.
5. No substitution is allowed for vertical and horizontal #4 bars in corners.
6. Manufacture base and risers to nearest 3" increment.
7. Design tongue and groove joints for full closure on both shoulders. Minimum spigot depth is ¾".
8. Provide lifting devices in conformance with Manufacturer's recommendations.
9. See sheet PDD for sizes, dimensions, and reinforcing steel not shown.
10. Provide hole in below grade slab only when PJB is installed with inlet type POD.

INSTALLATION NOTES:

1. Inverts (benching) to be provided by Contractor. Concrete or mortar used for invert is subsidiary to junction box.
2. Seal tongue and groove joints with preformed or bulk mastic in conformance with Manufacturer's recommendations. Tongue and groove joints may be grouted no more than 1" between each section, or ½ the joint depth, whichever is greater.
3. Do not grout rubber gasket joints without Manufacturer's recommendation.
4. For rigid pipe, cut hole in thin wall panel (KO) 4" Max, 2" Min larger than pipe OD.
5. For flexible pipe, consult boot/seal Manufacturer's specification for placement tolerance and hole size. Center pipe in hole and install boot/seal per Manufacturer's specification.

GENERAL NOTES:

1. Precast Junction Box consists of base slab, base unit, risers (as required), and below grade slab. See sheet PDD for sizes.
2. Designed according to ASTM C913.
3. Payment for junction box is per Item 465 "Junction Boxes, Manholes, and Inlets" by type and size.

Cover dimensions are clear dimensions, unless noted otherwise.

HL93 LOADING

Texas Department of Transportation

Bridge Division Standard

PRECAST JUNCTION BOX

PJB

FILE: CD-PJB-20.dgn	DN: TxDOT	CK: TxDOT	DW: TxDOT	CK: TxDOT
©TxDOT February 2020	CONT	SECT	JOB	HIGHWAY
REVISIONS	0337	01	053	SH 29
	DIST	COUNTY		SHEET NO.
	AUS	WILLIAMSON		147

DISCLAIMER:
The use of this standard is governed by the "Texas Engineering Practice Act." No warranty of any kind is made by TxDOT for any purpose whatsoever. TxDOT assumes no responsibility for the conversion of this standard to other formats or for incorrect results or damages resulting from its use.

DATE:
FILE:

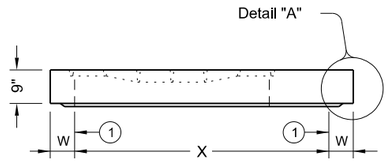

STYLE 'FG'

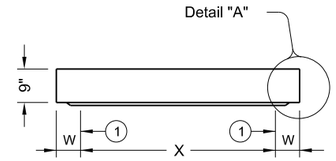

ELEVATION VIEW

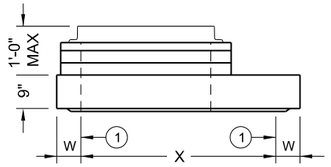

ELEVATION VIEW

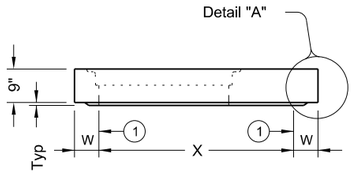

ELEVATION VIEW

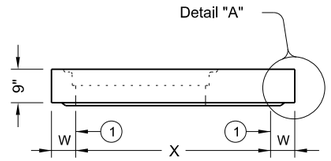

ELEVATION VIEW

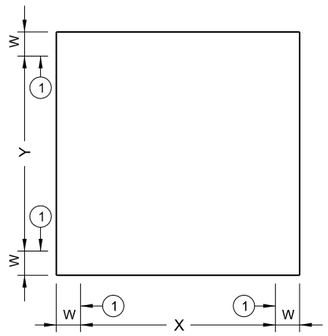

PLAN VIEW
NO OPENINGS
STYLE 'SL'

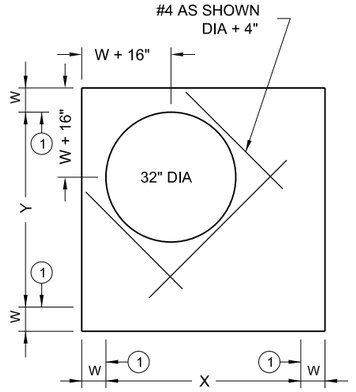

PLAN VIEW
SHIP LOOSE RING & COVER
STYLE 'RH'

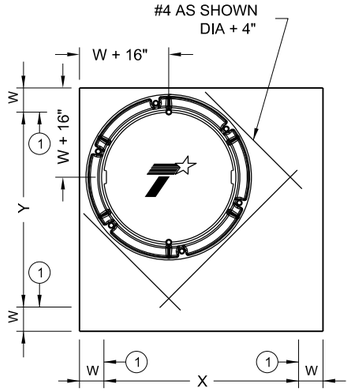

PLAN VIEW
32" DIA CAST-IN RING & COVER
STYLE 'RC'

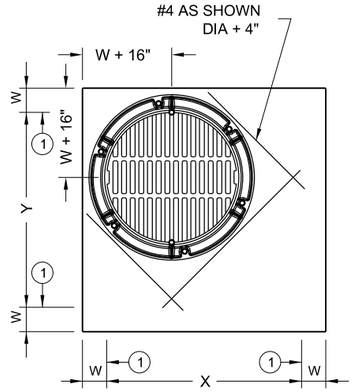

PLAN VIEW
32" DIA CAST-IN RING & GRATE
STYLE 'RG'

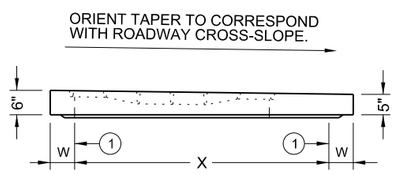

STYLE 'SFG'
ELEVATION VIEW

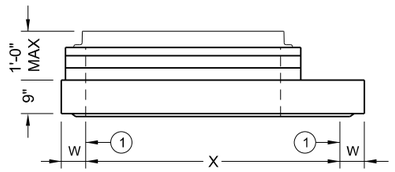

ELEVATION VIEW

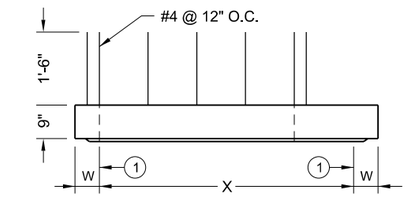

ELEVATION VIEW

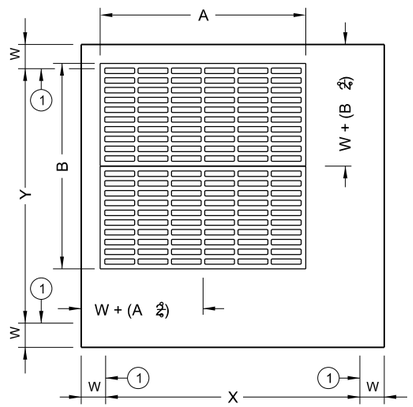

PLAN VIEW
CAST-IN FRAME & GRATE
STYLES 'FG' & 'SFG'

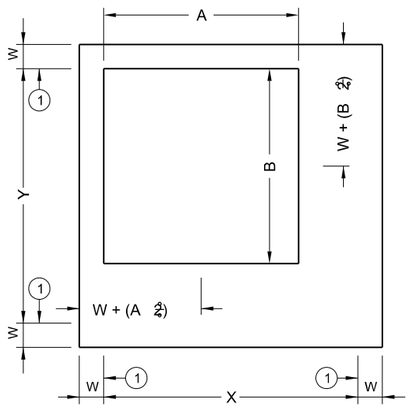

PLAN VIEW
SHIP LOOSE FRAME & GRATE
STYLE 'SH'

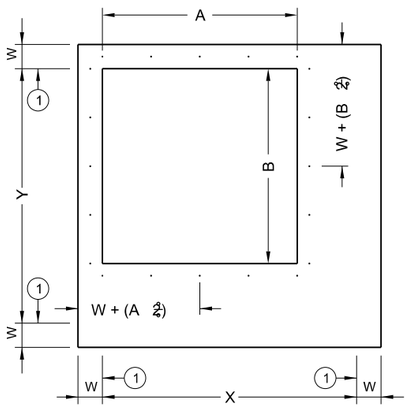

PLAN VIEW
EXPOSED REBAR
STYLE 'S1'

(1) Matches inside face of wall of precast base or riser below inlet.

HL93 LOADING SHEET 1 OF 2

Texas Department of Transportation

Bridge Division Standard

PRECAST SLAB LID

PSL

FILE: CD-PSL-20.dgn	DN: TxDOT	CK: TxDOT	DW: TxDOT	CK: TxDOT
©TxDOT February 2020	CONT	SECT	JOB	HIGHWAY
REVISIONS	0337	01	053	SH 29
	DIST	COUNTY		SHEET NO.
	AUS	WILLIAMSON		148

DISCLAIMER:
The use of this standard is governed by the "Texas Engineering Practice Act." No warranty of any kind is made by TxDOT for any purpose whatsoever. TxDOT assumes no responsibility for the conversion of this standard to other formats or for incorrect results or damages resulting from its use.

DATE:
FILE:

Style	Size (X x Y)	W (2)	A x B (nominal)	Short Span Reinf Steel Area	Long Span Reinf Steel Area
SL	3'x3'	6"	n/a	0.37 in□/ft	0.37 in□/ft
RH,RC,RG,SH,S1,FG	3'x3'	6"	3'x3' or 32" Dia	0.37 in□/ft	0.37 in□/ft
SFG	3'x3'	6"	3'x3'	0.32 in□/ft	0.32 in□/ft
SL	4'x4'	6"	n/a	0.34 in□/ft	0.34 in□/ft
RH,RC,RG,SH,S1,FG	4'x4'	6"	3'x3' or 32" Dia	0.41 in□/ft	0.41 in□/ft
SH,S1,FG	4'x4'	6"	4'x4'	0.41 in□/ft	0.41 in□/ft
SFG	4'x4'	6"	4'x4'	0.32 in□/ft	0.32 in□/ft
SL	3'x5'	6"	n/a	0.39 in□/ft	0.39 in□/ft
RH,RC,RG,SH,S1,FG	3'x5'	6"	3'x3' or 32" Dia	0.48 in□/ft	0.48 in□/ft
SH,S1,FG	3'x5'	6"	3'x5'	0.48 in□/ft	0.48 in□/ft
SFG	3'x5'	6"	3'x5'	0.32 in□/ft	0.32 in□/ft
SL	4'x5'	6"	n/a	0.42 in□/ft	0.42 in□/ft
RH,RC,RG,SH,S1,FG	4'x5'	6"	3'x3' or 32" Dia	0.42 in□/ft	0.42 in□/ft
SH,S1,FG	4'x5'	6"	4'x4'	0.63 in□/ft	0.63 in□/ft
SH,S1,FG	4'x5'	6"	3'x5'	0.66 in□/ft	0.66 in□/ft
SL	5'x5'	6"	n/a	0.36 in□/ft	0.36 in□/ft
RH,RC,RG,SH,S1,FG	5'x5'	6"	3'x3' or 32" Dia	0.43 in□/ft	0.43 in□/ft
SH,S1,FG	5'x5'	6"	4'x4'	0.63 in□/ft	0.63 in□/ft
SH,S1,FG	5'x5'	6"	3'x5'	0.63 in□/ft	0.63 in□/ft
SL	5'x6'	6"/8"	n/a	0.48 in□/ft	0.48 in□/ft
RH,RC,RG,SH,S1,FG	5'x6'	6"/8"	3'x3' or 32" Dia	0.48 in□/ft	0.48 in□/ft
SH,S1,FG	5'x6'	6"/8"	4'x4'	0.60 in□/ft	0.60 in□/ft
SH,S1,FG	5'x6'	6"/8"	3'x5'	0.60 in□/ft	0.60 in□/ft
SL	6'x6'	6"/8"	n/a	0.43 in□/ft	0.43 in□/ft
RH,RC,RG,SH,S1,FG	6'x6'	6"/8"	3'x3' or 32" Dia	0.56 in□/ft	0.56 in□/ft
SH,S1,FG	6'x6'	6"/8"	4'x4'	0.56 in□/ft	0.56 in□/ft
SH,S1,FG	6'x6'	6"/8"	3'x5'	0.59 in□/ft	0.59 in□/ft
SL	8'x8'	8"/10"	n/a	0.45 in□/ft	0.45 in□/ft
RH,RC,RG,SH,S1,FG	8'x8'	8"/10"	3'x3' or 32" Dia	0.45 in□/ft	0.45 in□/ft
SH,S1,FG	8'x8'	8"/10"	4'x4'	0.45 in□/ft	0.45 in□/ft
SH,S1,FG	8'x8'	8"/10"	3'x5'	0.45 in□/ft	0.45 in□/ft

(2) See sheet PDD for corresponding wall thickness (W) of base unit or riser.

Construct cast-in-place reinforced concrete apron, when shown elsewhere in plans. Use Class "A" concrete. Apron is subsidiary to PSL. Apron is 1'-6" Min width around precast zone drain.

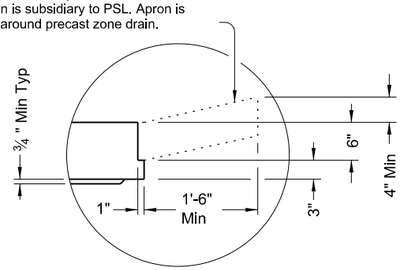

DETAIL "A"

(Reinforcing not shown for clarity)

When an apron is to be cast around PSL, use detail above to create an apron ledge on all 4 sides.

FABRICATION NOTES:

1. Locate penetration (Style 'RH'), ring and cover (Style 'RC'), ring and grate (Style 'RG'), and frame and grate (Style 'FG') in a corner. Only one penetration is allowed per slab lid.
2. Provide Class "H" concrete in accordance with Item 421 and having a minimum compressive strength of 5,000 psi.
3. Provide Grade 60 reinforcing steel or equivalent area of WWR.
4. Provide clear cover of ¾" to reinforcing from lower outside shoulder of slab for structural reinforcement, and 2" from top of slab for shrinkage and temperature reinforcement. Place short span reinforcing closest to surface.
5. Slabs with a thickness of 8" or greater require shrinkage and temperature reinforcing. Provide steel area = 0.11 in²/ft each way.
6. No substitution is allowed for diagonal #4 bars around openings.
7. Design tongue and groove joints for full closure on both shoulders. Minimum spigot depth is ¾".
8. Provide lifting devices in conformance with Manufacturer's recommendations.

INSTALLATION NOTES:

1. Precast slab lids are intended for direct traffic and may be placed in roadway.
2. Seal tongue and groove joints with preformed or bulk mastic in conformance with Manufacturer's recommendations. Tongue and groove joints may be grouted no more than 1" between each section, or ½ the joint depth, whichever is greater.
3. Do not grout rubber gasket joints without Manufacturer's recommendation.
4. Initial installation of grade adjustment rings for Styles 'RH' and 'SH' is limited to 1'-0" Max as shown.
5. Grade adjustment rings for Styles 'RH' and 'SH' may be increased to 2'-0" Max when future construction affects final grade of structure. Make adjustments greater than 2'-0" with additional risers. Adjustments can be made up to Max depth shown on sheet PDD. Structure must be evaluated if Max depth will be exceeded.
6. Orient long dimension of grate slots perpendicular to traffic, unless noted otherwise on plans

GENERAL NOTES:

1. Designed according to ASTM C913.
2. Payment for lid is per Item 465, "Junction Boxes, Manholes, and Inlets" by type, style, size, and opening size (when applicable).

Cover dimensions are clear dimensions, unless noted otherwise.

Texas Department of Transportation

Bridge Division Standard

PRECAST SLAB LID

PSL

FILE: CD-PSL-20.dgn	DN: TxDOT	CK: TxDOT	DW: TxDOT	CK: TxDOT
©TxDOT February 2020	CONT	SECT	JOB	HIGHWAY
REVISIONS	0337	01	053	SH 29
	DIST	COUNTY		SHEET NO.
	AUS	WILLIAMSON		149

EXISTING SIGNAL HEADS

3-SECTION 12" SIGNAL HEAD

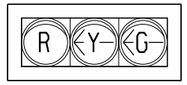

1 2 5

8 9 12 13

(HEADS 1,2,5,12 AND 13 TO BE REMOVED)

3-SECTION 12" SIGNAL HEAD

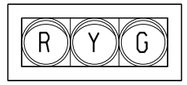

3 4 6 7

10 11 14 15

(HEADS 3,4,6,7,14 AND 15 TO BE REMOVED)

COUNTDOWN PEDESTRIAN SIGNAL HEAD



EW1,EW2,EW3,EW4
EW5,EW6,EW7,EW8

(HEADS EW1,EW2,EW3,EW4,EW6, EW7,EW8 TO BE RELOCATED)

EXISTING SIGNS TO BE REMOVED



R3-8
ES1,ES6,ES9

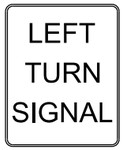

R10-10L
ES2,ES4,ES7,ES10



D3-1G
ES3,ES8



D3-1G
ES5,ES11

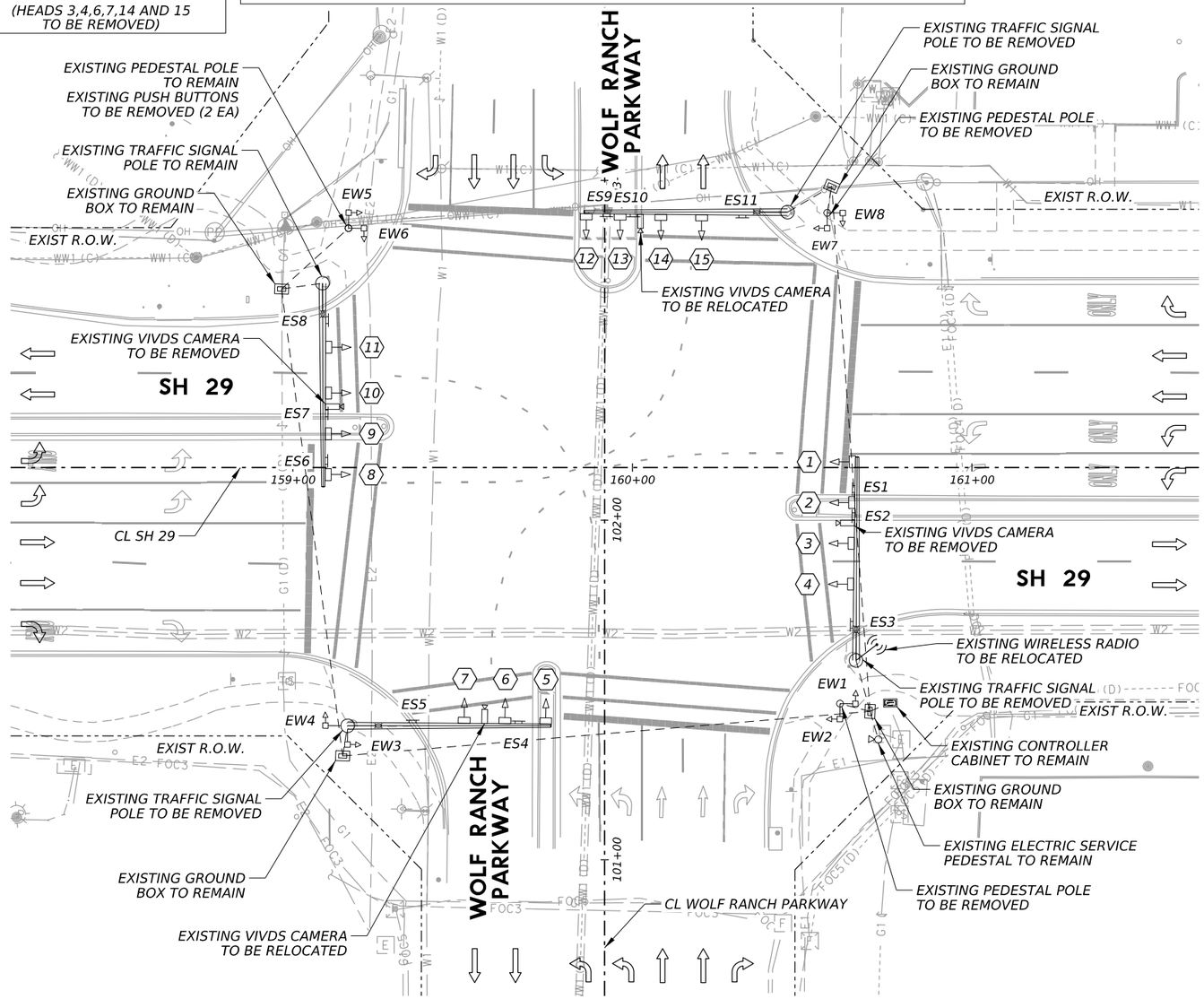

EXISTING LEGEND

- TRAFFIC SIGNAL POLE
- LUMINAIRE
- HORIZONTAL SIGNAL HEAD
- VERTICAL SIGNAL HEAD
- SIGN
- PEDESTAL POLE W/ PEDESTRIAN SIGNAL HEAD
- VIVDS CAMERA
- WIRELESS RADIO
- GROUND BOX (TYPE D W/ APRON)
- CONDUIT
- ELECTRIC SERVICE PEDESTAL
- CONTROLLER CABINET
- DIRECTION OF TRAFFIC
- RIGHT OF WAY (R.O.W.)

0' 20' 40'

NOTES:

1. EXISTING UNDERGROUND CONDUITS NO LONGER NECESSARY ARE TO BE REMOVED OR ABANDONED IN PLACE. REMOVE ALL CABLES AND CONDUCTORS FOR EQUIPMENT SPECIFIED FOR REMOVAL FROM THE DEVICE TO ITS TERMINATION POINT.
2. ALL TRAFFIC SIGNAL EQUIPMENT SPECIFIED FOR REMOVAL THAT IS DEEMED SALVAGEABLE BY THE CITY OF GEORGETOWN SHALL REMAIN THE PROPERTY OF THE CITY OF GEORGETOWN AND BE DELIVERED TO A LOCATION SPECIFIED BY THE CITY OF GEORGETOWN. ANY EQUIPMENT NOT DEEMED SALVAGEABLE BY THE CITY OF GEORGETOWN SHALL BECOME PROPERTY OF THE CONTRACTOR AND THE CONTRACTOR SHALL DISPOSE OF IN COMPLIANCE WITH ANY APPLICABLE FEDERAL, STATE, AND/OR LOCAL LAWS. THIS WORK SHALL BE CONSIDERED SUBSIDIARY TO ITEM 680 WITH NO ADDITIONAL PAY GIVEN.
3. THE PRESENCE/ABSENCE AND LOCATION OF EXISTING TRAFFIC SIGNAL EQUIPMENT SHOWN IN THE PLANS IS BASED ON THE BEST RECORDS AVAILABLE TO THE ENGINEER. CONTRACTOR SHALL STOP WORK IMMEDIATELY AND CONTACT THE ENGINEER FOR A RESOLUTION SHOULD FIELD CONDITIONS DIFFER FROM WHAT IS DEPICTED IN THE PLANS.
4. THE CONTRACTOR SHALL VERIFY, PRIOR TO STARTING WORK RELATED TO THE TRAFFIC SIGNAL, THAT GROUND BOXES AND/OR CONDUIT RUNS SHOWN FOR REMOVAL CONTAIN CABLING ONLY FOR EXISTING TRAFFIC SIGNAL EQUIPMENT. SHOULD EXISTING GROUND BOXES AND/OR CONDUITS CONTAIN WIRING FOR ANY EQUIPMENT OTHER THAN THE EXISTING TRAFFIC SIGNAL, CONTRACTOR SHALL STOP WORK IMMEDIATELY AND CONTACT THE ENGINEER FOR A RESOLUTION.

Matthew Gaal
9/24/2025

STATE OF TEXAS
MATTHEW A. GAAL
140753
LICENSED
PROFESSIONAL ENGINEER

GEORGETOWN TEXAS
more than welcome

Kimley»Horn F-928

Texas Department of Transportation

SH 29

WOLF RANCH PKWY
EXISTING TRAFFIC
SIGNAL LAYOUT

SHEET 1 OF 1

CONT	SECT	JOB	HIGHWAY
0337	01	053	SH 29
DIST	COUNTY		SHEET NO.
AUS	WILLIAMSON		150

DATE: 9/24/2025 6:26:23 PM
FILE: pw://kh-pw.bentley.com:kh-pw-01/Documents/01 Active Projects/TX-GEO-069284005 - SH 29 Widening/4 - Design/Plan Set/8. Traffic/SH29_K_SIG_101.dgn

CK: DW: CC: DW:

PROPOSED SIGNAL HEADS

3-SECTION 12" SIGNAL HEAD

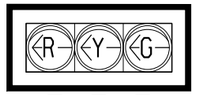

16 17 21
22 27 28

3-SECTION 12" SIGNAL HEAD

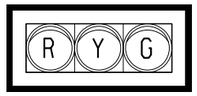

18 19 23
24 29 30

4-SECTION 12" SIGNAL HEAD (FYA)

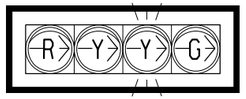

20 25 26 31

RELOCATED SIGNAL HEADS

COUNTDOWN PEDESTRIAN SIGNAL HEAD



EW1,EW2,EW3,EW4
EW6,EW7,EW8

RELOCATION OF PEDESTRIAN SIGNAL HEADS SHALL BE CONSIDERED SUBSIDIARY TO ITEM 680.

MODIFIED SIGNAL HEADS

3-SECTION 12" SIGNAL HEAD



10 11

RETROFIT REFL BRDR SHEETING

3-SECTION 12" SIGNAL HEAD

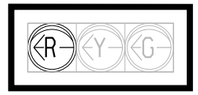

8 9

REMOVE EXISTING RED BALL INDICATION
INSTALL RED ARROW INDICATION

RETROFIT REFL BRDR SHEETING

PROPOSED SIGNS



R3-4
36" X 36"
PS1,PS3,
PS5,PS7

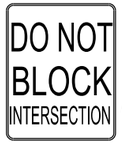

R10-7
24" X 30"
PS9,PS10,
PS11,PS12



ILSN
PS2,PS6
120" X 24"



ILSN
PS4,PS8
120" X 24"

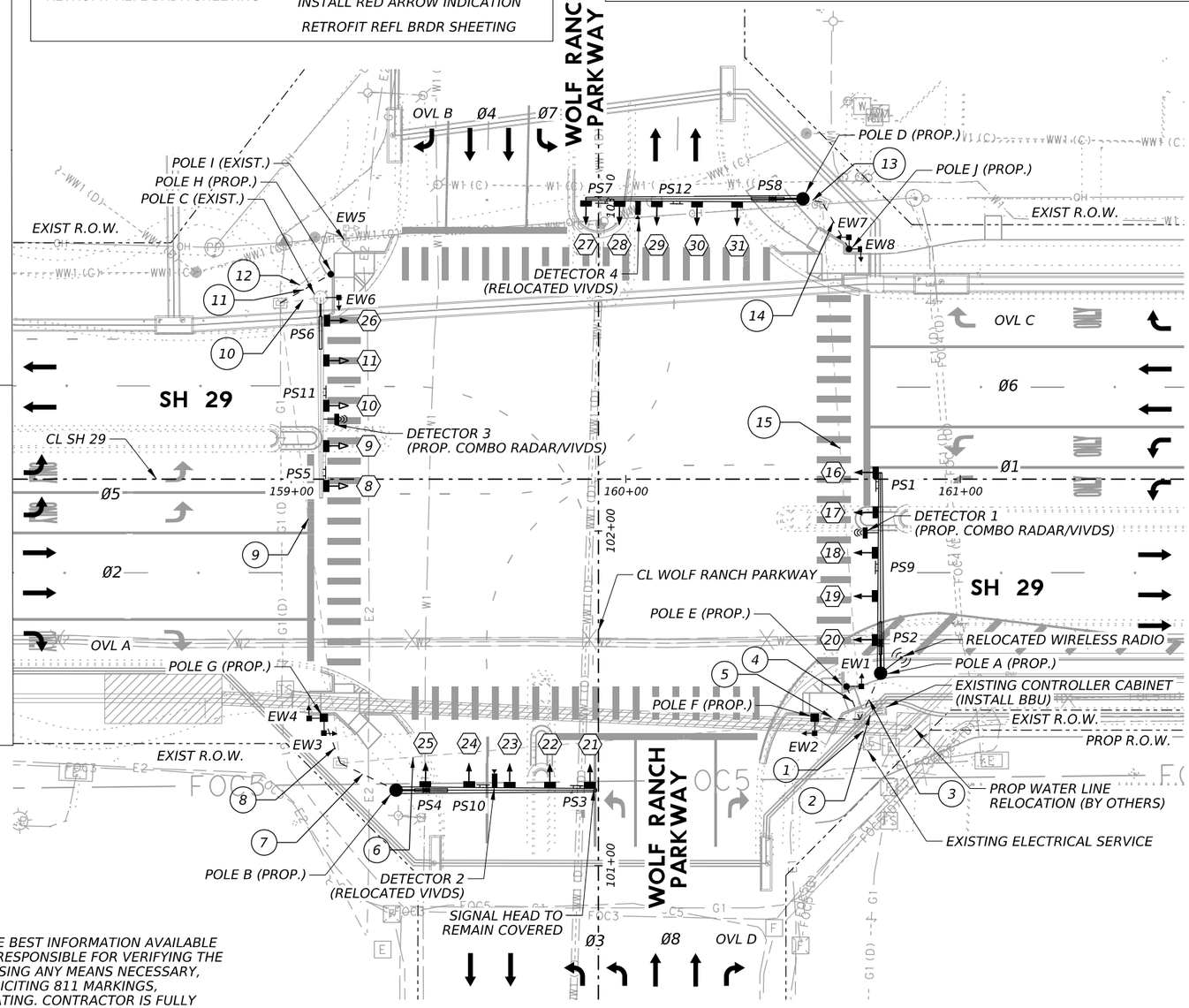

POLES F,G NOTE:
UTILIZE SPREAD FOOTING FOUNDATION.
SEE DETAILS.

NOTES:

1. UTILITIES SHOWN ARE BASED ON THE BEST INFORMATION AVAILABLE TO THE ENGINEER. CONTRACTOR IS RESPONSIBLE FOR VERIFYING THE EXACT LOCATION OF ALL UTILITIES USING ANY MEANS NECESSARY, INCLUDING BUT NOT LIMITED TO SOLICITING 811 MARKINGS, POTHOLING, AND/OR HYDRO EXCAVATING. CONTRACTOR IS FULLY RESPONSIBLE FOR ANY DAMAGES CAUSED TO EXISTING UNDERGROUND OR OVERHEAD UTILITIES.
2. THE LOCATION OF SIGNAL POLES, CABINET, ELECTRICAL SERVICE, AND GROUND BOXES SHALL BE VERIFIED AND APPROVED BY CITY OF GEORGETOWN PRIOR TO CONSTRUCTION.
3. CONTRACTOR SHALL CONNECT FIELD WIRING TO CONTROLLER.
4. CONTRACTOR SHALL NOTIFY CITY OF GEORGETOWN A MINIMUM OF SEVEN (7) DAYS PRIOR TO BEGINNING TRAFFIC SIGNAL WORK.

PROPOSED POLE NOTES

POLE A: INS TRF SIG PL AM(S)1 ARM(60')LUM&ILSN 48-A - (0686 7064)
POLE B: INS TRF SIG PL AM(S)1 ARM(60')LUM&ILSN 48-A - (0686 7064)
POLE C: INS TRF SIG PL AM(S) ILSN ARM (11') - (0686 7319)
POLE D: INS TRF SIG PL AM(S)1 ARM(65')LUM&ILSN 48-A - (0686 7068)
POLE E: PED POLE ASSEMBLY 24-A - (0687 7001)
POLE F: PED POLE ASSEMBLY (SPREAD FOOTING) - (0687 7001)
POLE G: PED POLE ASSEMBLY (SPREAD FOOTING) - (0687 7001)
POLE H: PEDESTRIAN PUSH BUTTON POLE 24-A - (0687 7002)
POLE J: PED POLE ASSEMBLY 24-A - (0687 7001)

PROPOSED POLE LOCATIONS

POLE NAME	A	B	D	E	F	G	H	J
STATION	160+76.2	159+31.3	160+52.9	160+65.6	160+56.5	159+09.8	159+11.8	160+66.7
OFFSET (FT)	58.0 - R	93.0 - R	83.8 - L	61.9 - R	71.4 - R	71.4 - R	61.2 - L	68.8 - L

ALL STATION & OFFSET VALUES REFER TO CL SH 29

PROPOSED LEGEND

- TRAFFIC SIGNAL POLE
- LUMINAIRE
- HORIZONTAL SIGNAL HEAD
- MODIFIED/RELOCATED HORIZONTAL SIGNAL HEAD
- VERTICAL SIGNAL HEAD
- INTERNALLY LIGHTED STREET NAME SIGN
- SIGN
- PEDESTAL POLE W/ PEDESTRIAN SIGNAL HEAD
- PEDESTAL POLE W/ SPREAD FOOTING FOUNDATION
- VIVDS CAMERA
- RADAR/VIVDS COMBO DETECTION DEVICE
- WIRELESS RADIO
- GROUND BOX (TYPE D W/APRON)
- CONDUIT (TRENCH)
- CONDUIT (BORE)
- CONTROLLER CABINET
- DIRECTION OF TRAFFIC
- RIGHT OF WAY (R.O.W.)
- ELECTRIC SERVICE PEDESTAL

N

0' 20' 40'

STATE OF TEXAS
MATTHEW A. GAAL
140753
LICENSED
PROFESSIONAL ENGINEER
Matthew Gaal
9/24/2025

GEORGETOWN TEXAS
more than welcome

Kimley»Horn F-928

Texas Department of Transportation

SH 29

WOLF RANCH PKWY
PROPOSED TRAFFIC
SIGNAL LAYOUT

SHEET 1 OF 1

CONT	SECT	JOB	HIGHWAY
0337	01	053	SH 29
DIST	COUNTY		SHEET NO.
AUS	WILLIAMSON		151

DATE: 9/24/2025 6:26:43 PM
FILE: pw://kh-pw.bentley.com:kh-pw-01/Documents/01 Active Projects/TX-GEO-069284005 - SH 29 Widening/4 - Design/Plan Set/8. Traffic/SH29_K_SIG_201.dgn

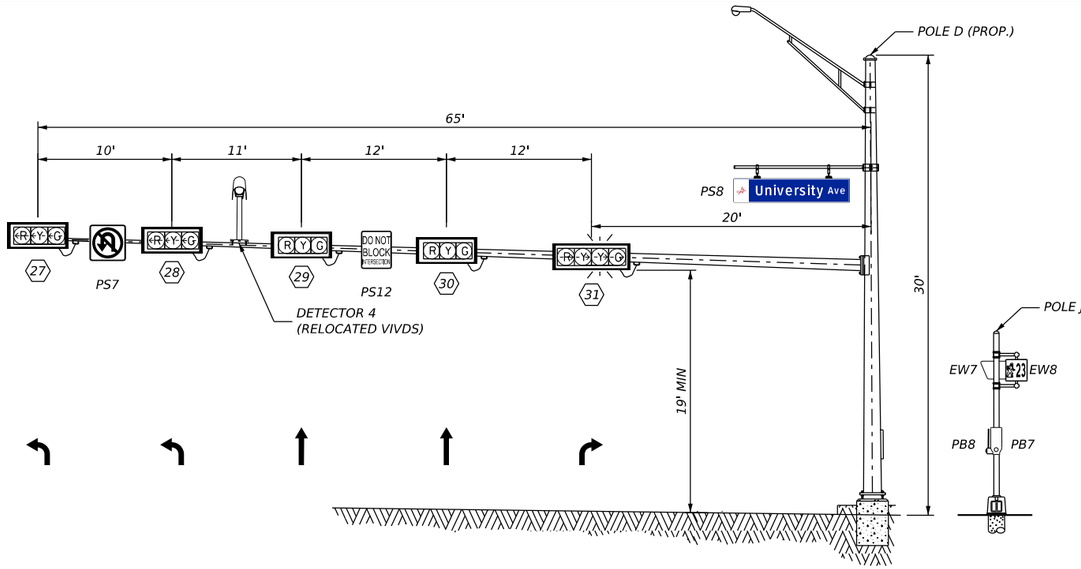

LOOKING NORTH ON WOLF RANCH PARKWAY

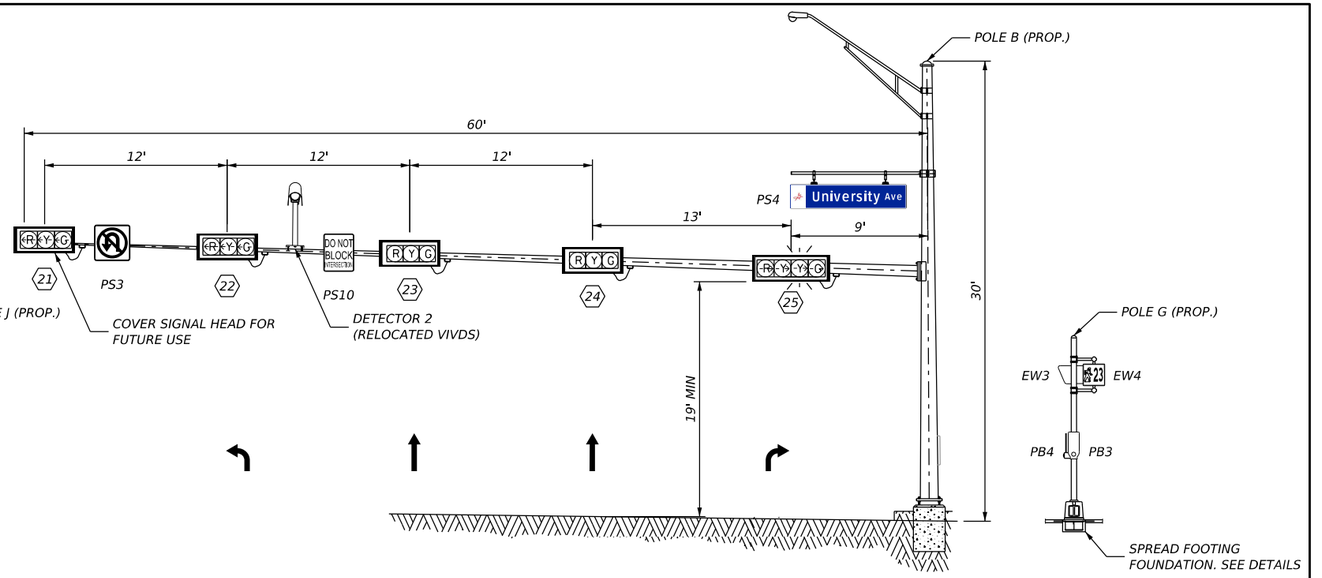

LOOKING SOUTH ON WOLF RANCH PARKWAY

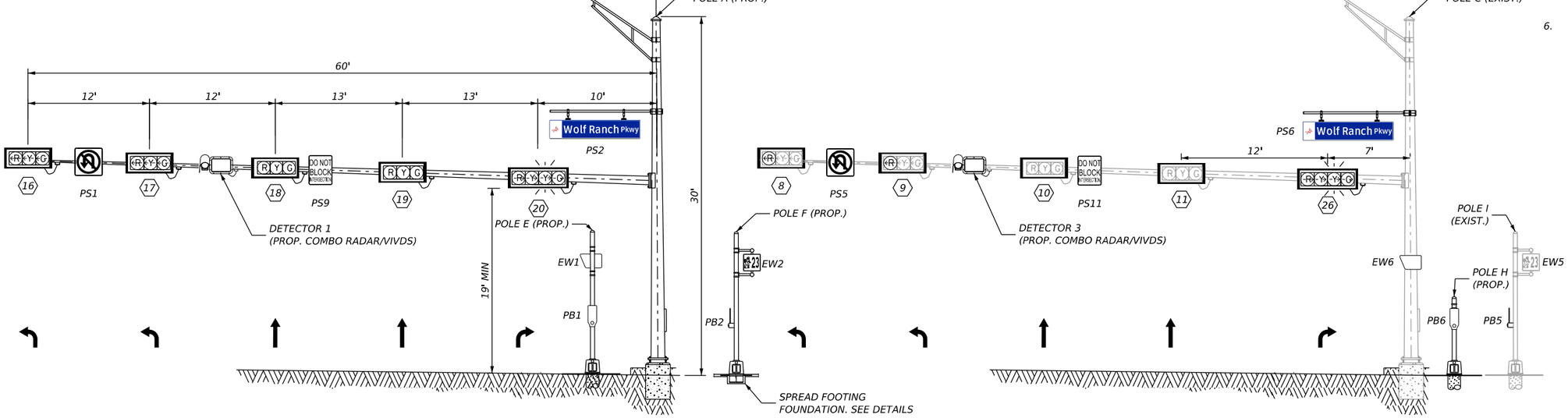

LOOKING EAST ON SH 29

LOOKING WEST ON SH 29

ELECTRICAL SERVICE

ELECTRICAL SERVICE DESCRIPTION	SERVICE CONDUIT SIZE*	SERVICE CONDUCTORS NO./SIZE	SAFETY SWITCH AMPS	MAIN CKT. BKR. POLE/AMPS	LIGHTING CONTACTOR AMPS	PANELBD/ LOADCENTER AMP RATING	BRANCH CIRCUIT ID	BRANCH CKT. BKR. POLE/AMPS	BRANCH CIRCUIT AMPS	KVA LOAD
ELC SRV TY D 120/240 100 (NS)AL(E)PS(U)	(EXISTING TO REMAIN)						ILSN	2P/15	4	<6.8

NOTES:

1. FOUNDATIONS ARE TO BE ADJUSTED IN THE FIELD IN ORDER TO MEET CLEARANCE.
2. LOCATION OF MAST ARMS IS APPROXIMATE. ANY CHANGES MUST BE APPROVED BY THE ENGINEER.
3. MAST ARM ATTACHMENT HEIGHT WILL BE CALCULATED BY THE CONTRACTOR IN THE FIELD AND APPROVED BY THE ENGINEER.
4. ELEVATION VIEWS ARE NOT TO SCALE.
5. MOUNT PEDESTRIAN SIGNAL HEADS 8-10' ABOVE ADJACENT WALKING SURFACE, MEASURED TO THE BOTTOM OF THE PEDESTRIAN SIGNAL HEAD HOUSING.
6. MOUNT APS PUSH BUTTON NO HIGHER THAN 42" ABOVE ADJACENT WALKING SURFACE.

Matthew Gaal
9/24/2025

STATE OF TEXAS
MATTHEW A. GAAL
140753
LICENSED
PROFESSIONAL ENGINEER

GEORGETOWN TEXAS
more than welcome

Kimley»Horn F-928

Texas Department of Transportation

SH 29

WOLF RANCH PKWY
TRAFFIC SIGNAL
ELEVATION VIEWS

SHEET 1 OF 1

CONT	SECT	JOB	HIGHWAY
0337	01	053	SH 29
DIST	COUNTY		SHEET NO.
AUS	WILLIAMSON		152

DATE: 9/24/2025 6:26:59 PM
FILE: pw://kh-pw.bentley.com:kh-pw-01/Documents/01 Active Projects/TX-GEO-069284005 - SH 29 Widening/4 - Design/Plan Set/8. Traffic/SH29_K_SIG_301.dgn

CABLE TERMINATION

CONDUCTOR COLOR	CABLE 1 HEADS 16,17 PHASE 5	CABLE 2 HEADS 18,19 PHASE 2	CABLE 3 HEAD 20 OVL A	CABLE 4 HEADS 21,22 PHASE 7	CABLE 5 HEADS 23,24 PHASE 4	CABLE 6 HEAD 25 OVL B	CABLE 7 HEAD 26 OVL C	CABLE 8 HEADS 27,28 PHASE 3	CABLE 9 HEADS 29,30 PHASE 8	CABLE 10 HEAD 31 OVL D
	7C	5C	7C	7C	5C	7C	7C	7C	5C	7C
BLACK	SPARE	Y	SPARE	SPARE	Y	SPARE	SPARE	SPARE	Y	SPARE
WHITE	SIGNAL COMMON	SIGNAL COMMON	SIGNAL COMMON	SIGNAL COMMON	SIGNAL COMMON	SIGNAL COMMON	SIGNAL COMMON	SIGNAL COMMON	SIGNAL COMMON	SIGNAL COMMON
RED	R ARW	R	R ARW	R ARW	R	R ARW	R ARW	R ARW	R	R ARW
GREEN	SPARE	G	SPARE	SPARE	G	SPARE	SPARE	SPARE	G	SPARE
ORANGE	Y ARW	SPARE	Y ARW	Y ARW	SPARE	Y ARW	Y ARW	Y ARW	SPARE	Y ARW
BLUE	G ARW	----	G ARW	G ARW	----	G ARW	G ARW	G ARW	----	G ARW
WHITE/BLACK	SPARE	----	FY ARW	SPARE	----	FY ARW	FY ARW	SPARE	----	FY ARW

CONDUCTOR COLOR	CABLE 11 EW1 (PHASE 8 - PED)	CABLE 12 PB1 (PHASE 8 - PED)	CABLE 13 EW2 (PHASE 2 - PED)	CABLE 14 PB2 (PHASE 2 - PED)	CABLE 15 EW3 (PHASE 2 - PED)	CABLE 16 PB3 (PHASE 2 - PED)	CABLE 17 EW4 (PHASE 4 - PED)	CABLE 18 PB4 (PHASE 4 - PED)
	5C	2C	5C	2C	5C	2C	5C	2C
BLACK	SPARE	PED CALL	DW	PED CALL	DW	PED CALL	SPARE	PED CALL
WHITE	PED COMMON	APS COMMON	PED COMMON	APS COMMON	PED COMMON	APS COMMON	PED COMMON	APS COMMON
RED	DW	----	SPARE	----	SPARE	----	DW	----
GREEN	W	----	SPARE	----	SPARE	----	W	----
ORANGE	SPARE	----	W	----	W	----	SPARE	----
BLUE	----	----	----	----	----	----	----	----
WHITE/BLACK	----	----	----	----	----	----	----	----

CONDUCTOR COLOR	CABLE 19 EW6 (PHASE 4 - PED)	CABLE 20 PB6 (PHASE 4 - PED)	CABLE 21 EW7 (PHASE 6 - PED)	CABLE 22 PB7 (PHASE 6 - PED)	CABLE 23 EW8 (PHASE 8 - PED)	CABLE 24 PB8 (PHASE 8 - PED)
	5C	2C	5C	2C	5C	2C
BLACK	SPARE	PED CALL	DW	PED CALL	SPARE	PED CALL
WHITE	PED COMMON	APS COMMON	PED COMMON	APS COMMON	PED COMMON	APS COMMON
RED	DW	----	SPARE	----	DW	----
GREEN	W	----	SPARE	----	W	----
ORANGE	SPARE	----	W	----	SPARE	----
BLUE	----	----	----	----	----	----
WHITE/BLACK	----	----	----	----	----	----

POLE WIRING

INSIDE POLES	TYPE	ELEC CONDR #8 INS (LUM)	TRAY CABLE 4C # 14	SIGNAL CABLE TY A 2C # 12	SIGNAL CABLE TY A 5C # 14	SIGNAL CABLE TY A 7C # 14	ETHERNET
A	SIGNAL POLE (30' TALL)	60	25		40	60	50
B	SIGNAL POLE (30' TALL)	60	25		40	60	20
C	SIGNAL POLE (30' TALL)		25		10	20	20
D	SIGNAL POLE (30' TALL)	60	25		40	60	20
E	PEDESTRIAN POLE (10' TALL)			5	10		
F	PEDESTRIAN POLE (10' TALL)			5	10		
G	PEDESTRIAN POLE (10' TALL)			10	20		
H	PUSH BUTTON POLE (5' TALL)			5			
I	PEDESTRIAN POLE (10' TALL)						
J	PEDESTRIAN POLE (10' TALL)			10	20		
TOTAL QTY (LF)		180	100	35	190	200	110

GROUND WIRING

CONDUIT AND CABLE CHART / WIRE SIZE AND TYPE														
RUN #	ACTION	ITEM 618 CONDUIT SIZE AND TYPE			ACTION	ITEM 620 ELECTRICAL CONDUCTORS		ITEM 621 TRAY CABLE	ITEM 684 SIGNAL CABLE (TYPE A)				ITEM 6005 ETHERNET	LENGTH OF RUN	RUN #
		2" PVC SCH 40 TRENCH	3" PVC SCH 40 TRENCH	3" PVC SCH 40 BORE		NO. 8 INSULATED (GROUND)	NO. 8 INSULATED (LUM)	4 CNDR NO. 14 (ILSN)	2 CNDR NO. 12 (APS)	5 CNDR NO. 14 (PED)	5 CNDR NO. 14 (VEH)	7 CNDR NO. 14 (VEH)			
1	E	2			I		6	4						10	1
2	E	1	3		I				7	7	3	7	5	10	2
3	I	1	2		I	3	2	1			1	2	2	20	3
4	I	1			I	1			1	1				15	4
5	I	1			I	1			1	1				15	5
6	E			3	I		2	2	3	3	1	3	2	160	6
7	I	1	2		I	3	2	1			1	2	1	20	7
8	I	1			I	1			2	2				15	8
9	E			3	I			1	1	1		1	1	140	9
10	E	1	2		I			1		1		1	1	15	10
11	I	1			I	1			1					20	11
12	E	1			I									30	12
13	I	1	2		I	3	2	1			1	2	1	15	13
14	I	1			I	1			2	2				20	14
15	E			3	I		2	1	2	2	1	2	1	155	15
SUBTOTAL (LF)		140	110	0		250	740	515	1120	1115	400	785	755	SUBTOTAL (LF)	

ACTION CODES: I - INSTALL; E - EXISTING

ARM WIRING

INSIDE ARMS	SIGNAL CABLE TY A 5C # 14	SIGNAL CABLE TY A 7C # 14	ETHERNET
POLE A - 60' ARM			
HEADS 16 & 17		110	
HEADS 18 & 19	70		
HEAD 20		10	
DETECTOR 1 (COMBO RADAR/VIVDS)			45
POLE B - 60' ARM			
HEADS 21 & 22		110	
HEADS 23 & 24	60		
HEAD 25		10	
DETECTOR 2 (VIVDS)			40
POLE C - 60' ARM			
HEAD 26		10	
DETECTOR 3 (COMBO RADAR/VIVDS)			40
POLE D - 65' ARM			
HEADS 27 & 28		120	
HEADS 29 & 30	80		
HEAD 31		10	
DETECTOR 4 (VIVDS)			45
TOTAL QTY (LF)	210	380	170

PUSH BUTTON DETAILS

APS MESSAGE INFORMATION			
APS UNIT NO.	ACKNOWLEDGEMENT DEFAULT "WAIT"	EXTENDED PRESS MESSAGE "WAIT TO CROSS (STREET NAME) AT (CROSS STREET NAME)"	WALK PRESS MESSAGE "(STREET NAME); WALK SIGN IS ON TO CROSS (STREET NAME)"
PB1	YES	UNIVERSITY AT WOLF RANCH	UNIVERSITY
PB2	YES	WOLF RANCH AT UNIVERSITY	WOLF RANCH
PB3	YES	WOLF RANCH AT UNIVERSITY	WOLF RANCH
PB4	YES	UNIVERSITY AT WOLF RANCH	UNIVERSITY
PB5	YES	WOLF RANCH AT UNIVERSITY	WOLF RANCH
PB6	YES	UNIVERSITY AT WOLF RANCH	UNIVERSITY
PB7	YES	WOLF RANCH AT UNIVERSITY	WOLF RANCH
PB8	YES	UNIVERSITY AT WOLF RANCH	UNIVERSITY

CABINET WIRING

INSIDE CABINET	SIGNAL CABLE TY A 2C # 12	SIGNAL CABLE TY A 5C # 14 (PED)	SIGNAL CABLE TY A 5C # 14 (VEH)	SIGNAL CABLE TY A 7C # 14 (VEH)	ETHERNET
TOTAL QTY	35	35	15	35	25

PUSH BUTTON DETAILS

PEDESTRIAN SIGN DETAIL			
POLE		SIGN	SIZE
E	PB1	R10-3eL	9" x 15"
F	PB2	R10-3eR	9" x 15"
G	PB3	R10-3eL	9" x 15"
	PB4	R10-3eR	9" x 15"
H	PB6	R10-3eL	9" x 15"
I	PB5	R10-3eR	9" x 15"
J	PB7	R10-3eL	9" x 15"
	PB8	R10-3eR	9" x 15"

NOTES:

FURNISH THE MATERIALS LISTED BELOW (OR APPROVED EQUAL) FOR COMPATIBILITY WITH CITY OF GEORGETOWN TRAFFIC MANAGEMENT SYSTEM. PROVIDE SHOP DRAWINGS FOR APPROVAL BY THE ENGINEER PRIOR TO ORDERING EQUIPMENT.

1. ITERIS MYERS BBU SYSTEM WITH GENERATOR INPUT OPTION AND OPERATION
2. POLARA IN2 INAVIGATOR 2-WIRE PUSH BUTTON SYSTEM
3. POLARA ICCU-S INTELLIGENT CENTRAL CONTROL UNIT
4. ITERIS VANTAGE NEXT CAMERA AND DETECTION SYSTEM
5. ITERIS VANTAGE WITH VANTAGE VECTOR DETECTION

Matthew Gaal
9/24/2025

STATE OF TEXAS
MATTHEW A. GAAL
140753
LICENSED
PROFESSIONAL ENGINEER

GEORGETOWN TEXAS
more than welcome

Kimley»Horn F-928

Texas Department of Transportation

SH 29

WOLF RANCH PKWY
TRAFFIC SIGNAL
ELECTRICAL DATA

SHEET 1 OF 1

CONT	SECT	JOB	HIGHWAY
0337	01	053	SH 29
DIST	COUNTY		SHEET NO.
AUS	WILLIAMSON		153

DATE: 9/24/2025 6:27:14 PM
FILE: pw://kh-pw.bentley.com:kh-pw-01/Documents/01 Active Projects/TX-GEO-069284005 - SH 29 Widening/4 - Design/Plan Set/8. Traffic/SH29_K_SIG_401.dgn

DETECTOR	APPROACH	TYPE	MOUNTING LOCATION
1	EASTBOUND THRU (PHASE 2 - P1)	PRESENCE	POLE A
	EASTBOUND THRU (PHASE 2 - A1)	ADVANCE	
	EASTBOUND LEFT (PHASE 5 - P1)	PRESENCE	
2	SOUTHBOUND THRU (PHASE 4 - P1)	PRESENCE	POLE B
	SOUTHBOUND LEFT (PHASE 7- P1)	PRESENCE	
3	WESTBOUND THRU (PHASE 6 - P1)	PRESENCE	POLE C
	WESTBOUND THRU (PHASE 6 - A1)	ADVANCE	
	WESTBOUND LEFT (PHASE 1 - P1)	PRESENCE	
4	NORTHBOUND THRU (PHASE 8 - P1)	PRESENCE	POLE D
	NORTHBOUND LEFT (PHASE 3- P1)	PRESENCE	

ORIENTATION DIAGRAM

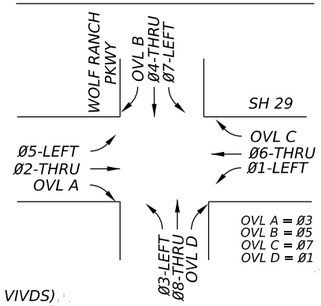

PROPOSED LEGEND

- TRAFFIC SIGNAL POLE
- LUMINAIRE
- HORIZONTAL SIGNAL HEAD
- MODIFIED/RELOCATED HORIZONTAL SIGNAL HEAD
- VERTICAL SIGNAL HEAD
- INTERNALLY LIGHTED STREET NAME SIGN
- SIGN
- PEDESTAL POLE W/ PEDESTRIAN SIGNAL HEAD
- PEDESTAL POLE W/ SPREAD FOOTING FOUNDATION
- VIVDS CAMERA
- RADAR/VIVDS COMBO DETECTION DEVICE
- WIRELESS RADIO
- GROUND BOX (TYPE D W/APRON)
- CONDUIT (TRENCH)
- CONDUIT (BORE)
- CONTROLLER CABINET
- DIRECTION OF TRAFFIC
- RIGHT OF WAY (R.O.W.)
- ELECTRIC SERVICE PEDESTAL

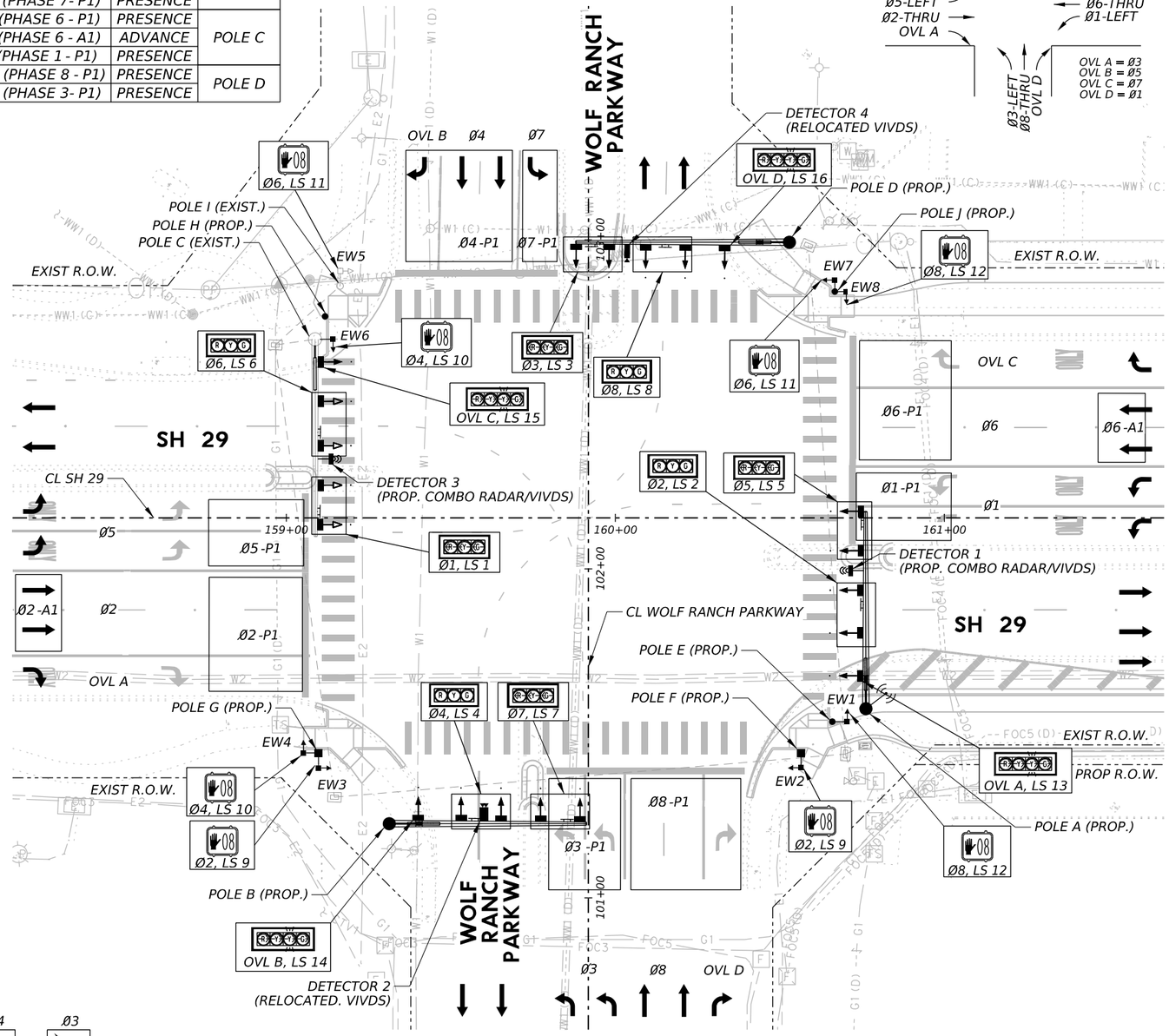

PHASING DIAGRAM

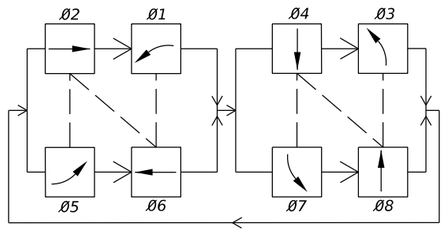

NOTES

1. CONTRACTOR SHALL COORDINATE WITH CITY OF GEORGETOWN FOR EXACT PLACEMENT OF THE DETECTION ZONES.
2. PHASE 1 AND 5 SHALL NOT RUN CONCURRENTLY.
3. PHASE 3 AND 7 SHALL NOT RUN CONCURRENTLY.

0' 20' 40'

Matthew Gaal
9/24/2025

STATE OF TEXAS
MATTHEW A. GAAL
140753
LICENSED
PROFESSIONAL ENGINEER

GEORGETOWN TEXAS
more than welcome

Kimley»Horn F-928

Texas Department of Transportation

SH 29

WOLF RANCH PKWY TRAFFIC SIGNAL PHASING, DETECTION & LOAD SWITCH LAYOUT

SHEET 1 OF 1

CONT	SECT	JOB	HIGHWAY
0337	01	053	SH 29
DIST	COUNTY		SHEET NO.
AUS	WILLIAMSON		154

DATE: 9/24/2025 6:27:34 PM
FILE: pw://kh-pw.bentley.com:kh-pw-01/Documents/01 Active Projects/TX-GEO-069284005 - SH 29 Widening/4 - Design/Plan Set/8. Traffic/SH29_K_SIG_501.dgn

CK DW CK DW

EXISTING SIGNAL HEADS

3-SECTION 12" SIGNAL HEAD — (R) (Y) (G) — 1, 8, 9

3-SECTION 12" SIGNAL HEAD — R Y G — 3, 4, 6, 10, 11, 14

4-SECTION 12" SIGNAL HEAD (FYA) — (R) (Y) (Y) (G) — 5, 13

5-SECTION 12" SIGNAL HEAD — R Y G (Y) (G) — 7, 15

3-SECTION 12" SIGNAL HEAD — (R) (Y) (G) — 2

3-SECTION 12" SIGNAL HEAD — R Y G — 12

COUNTDOWN PEDESTRIAN SIGNAL HEAD — EW1,EW2,EW3,EW4 EW5,EW6,EW7,EW8

EXISTING SIGNS

R3-4 — ES1,ES4

LEFT TURN YIELD ON FLASHING YELLOW ARROW — R10-17T — ES3,ES6

University Ave — D3-1G — ES7

Wolf Lakes Dr → — D3-1G — ES5

← Wolf Lakes Dr — D3-1G — ES2

EXISTING LEGEND

- TRAFFIC SIGNAL POLE
- LUMINAIRE
- HORIZONTAL SIGNAL HEAD
- VERTICAL SIGNAL HEAD
- SIGN
- PEDESTAL POLE W/ PEDESTRIAN SIGNAL HEAD
- VIVDS CAMERA
- WIRELESS RADIO
- GROUND BOX (TYPE D W/ APRON)
- CONDUIT
- ELECTRIC SERVICE PEDESTAL
- CONTROLLER CABINET
- DIRECTION OF TRAFFIC
- RIGHT OF WAY (R.O.W.)

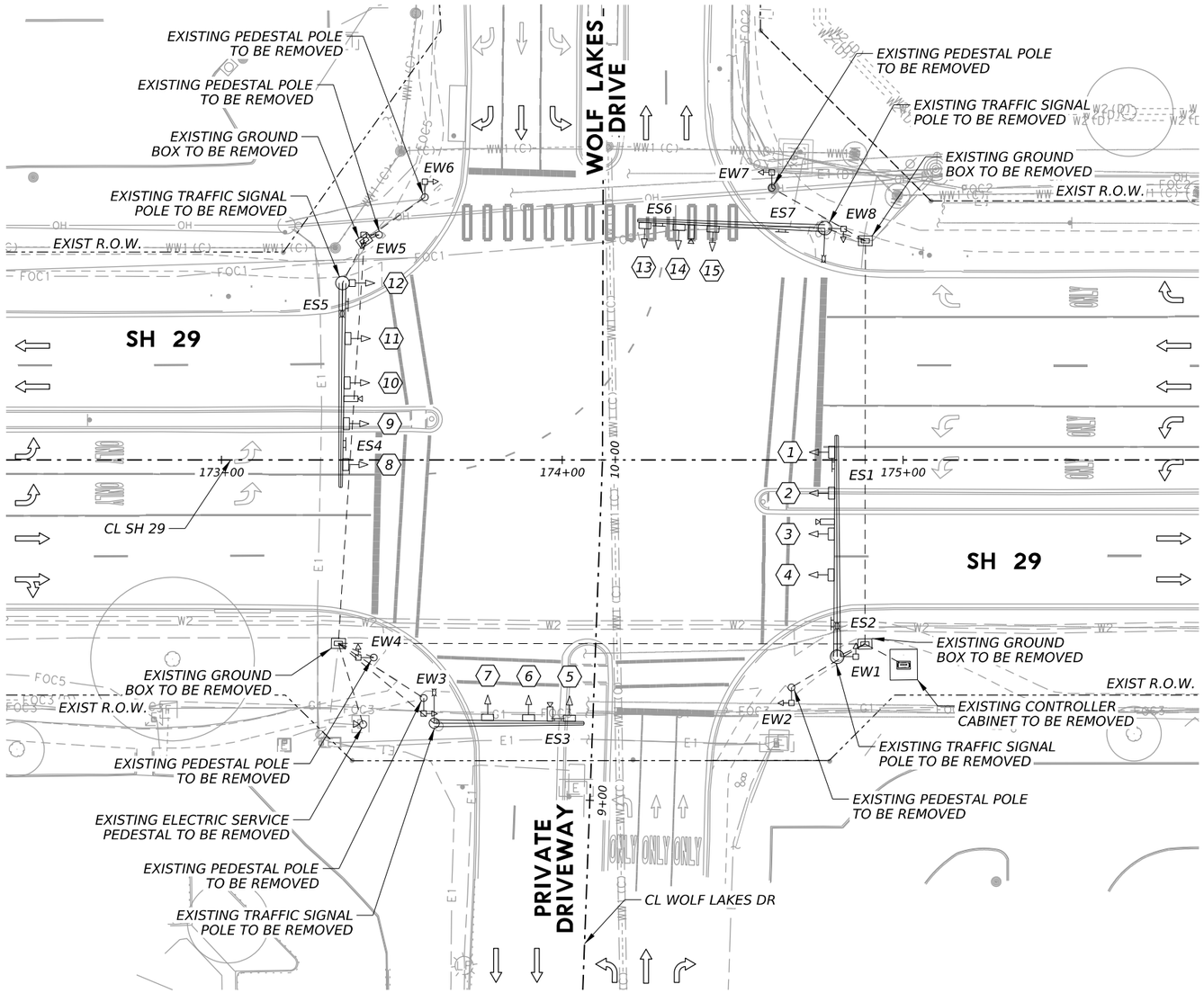

0' 20' 40'

NOTES:

1. ALL EXISTING UNDERGROUND CONDUITS ARE TO BE REMOVED OR ABANDONED IN PLACE. ALL CABLES AND CONDUCTORS ARE TO BE REMOVED.
2. ALL TRAFFIC SIGNAL EQUIPMENT SPECIFIED FOR REMOVAL THAT IS DEEMED SALVAGEABLE BY THE CITY OF GEORGETOWN SHALL REMAIN THE PROPERTY OF THE CITY OF GEORGETOWN AND BE DELIVERED TO A LOCATION SPECIFIED BY THE CITY OF GEORGETOWN. ANY EQUIPMENT NOT DEEMED SALVAGEABLE BY THE CITY OF GEORGETOWN SHALL BECOME PROPERTY OF THE CONTRACTOR AND THE CONTRACTOR SHALL DISPOSE OF IN COMPLIANCE WITH ANY APPLICABLE FEDERAL, STATE, AND/OR LOCAL LAWS. THIS WORK SHALL BE CONSIDERED SUBSIDIARY TO ITEM 680 WITH NO ADDITIONAL PAY GIVEN.
3. THE PRESENCE/ABSENCE AND LOCATION OF EXISTING TRAFFIC SIGNAL EQUIPMENT SHOWN IN THE PLANS IS BASED ON THE BEST RECORDS AVAILABLE TO THE ENGINEER. CONTRACTOR SHALL STOP WORK IMMEDIATELY AND CONTACT THE ENGINEER FOR A RESOLUTION SHOULD FIELD CONDITIONS DIFFER FROM WHAT IS DEPICTED IN THE PLANS.
4. THE CONTRACTOR SHALL VERIFY, PRIOR TO STARTING WORK RELATED TO THE TRAFFIC SIGNAL, THAT GROUND BOXES AND/OR CONDUIT RUNS SHOWN FOR REMOVAL CONTAIN CABLING ONLY FOR EXISTING TRAFFIC SIGNAL EQUIPMENT. SHOULD EXISTING GROUND BOXES AND/OR CONDUITS CONTAIN WIRING FOR ANY EQUIPMENT OTHER THAN THE EXISTING TRAFFIC SIGNAL, CONTRACTOR SHALL STOP WORK IMMEDIATELY AND CONTACT THE ENGINEER FOR A RESOLUTION.

Matthew Gaal
9/24/2025

STATE OF TEXAS — MATTHEW A. GAAL — 140753 — LICENSED PROFESSIONAL ENGINEER

GEORGETOWN TEXAS more than welcome

Kimley»Horn F-928

Texas Department of Transportation

SH 29

WOLF LAKES DR EXISTING TRAFFIC SIGNAL LAYOUT

SHEET 1 OF 1

CONT	SECT	JOB	HIGHWAY
0337	01	053	SH 29
DIST	COUNTY		SHEET NO.
AUS	WILLIAMSON		155

DATE: 9/24/2025 6:27:50 PM
FILE: pw://kh-pw.bentley.com:kh-pw-01/Documents/01 Active Projects/TX-GEO-069284005 - SH 29 Widening/4 - Design/Plan Set/8. Traffic/SH29_K_SIG_102.dgn

PROPOSED SIGNAL HEADS

3-SECTION 12" SIGNAL HEAD



16 17 22
23 26 27 32

3-SECTION 12" SIGNAL HEAD

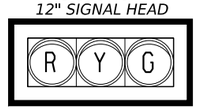

18 19 20 24
28 29 30 33

4-SECTION 12" SIGNAL HEAD (FYA)

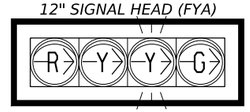

21

COUNTDOWN PEDESTRIAN SIGNAL HEAD



W1,W2,W3,W4
W5,W6,W7,W8

4-SECTION 12" SIGNAL HEAD (FYA)

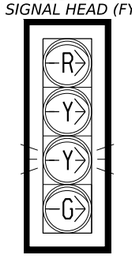

31

5-SECTION 12" SIGNAL HEAD

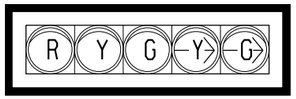

25 34

PROPOSED SIGNS



R3-4
36" X 36"
PS1,PS3,
PS5,PS7

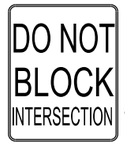

R10-7
24" X 30"
PS9,PS10,
PS11,PS12



ILSN
PS2,PS6
120" X 24"



ILSN
PS4,PS8
120" X 24"

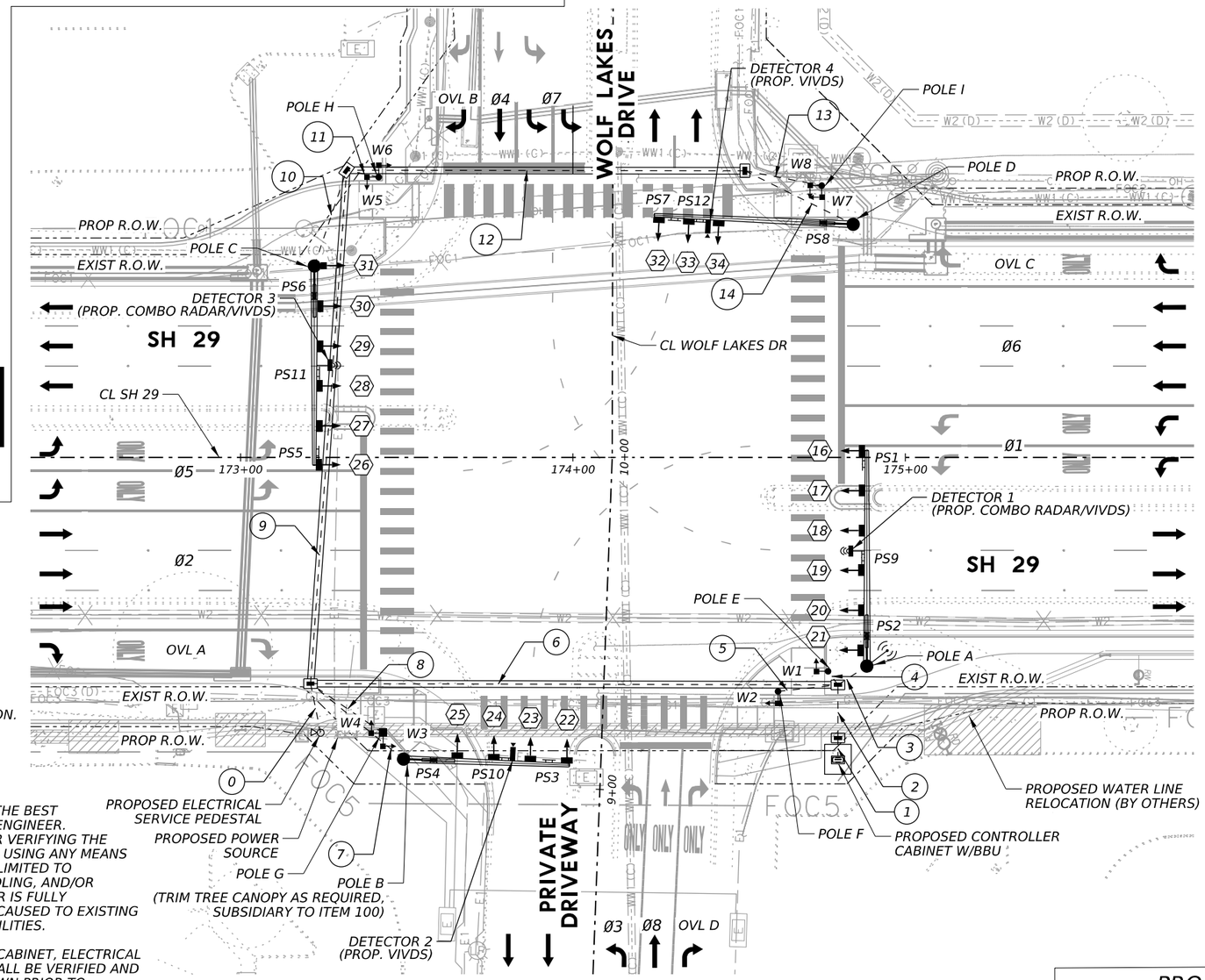

POLE G NOTE:
UTILIZE SPREAD FOOTING FOUNDATION.
SEE DETAILS.

NOTES:

1. UTILITIES SHOWN ARE BASED ON THE BEST INFORMATION AVAILABLE TO THE ENGINEER. CONTRACTOR IS RESPONSIBLE FOR VERIFYING THE EXACT LOCATION OF ALL UTILITIES USING ANY MEANS NECESSARY, INCLUDING BUT NOT LIMITED TO SOLICITING 811 MARKINGS, POTHOLING, AND/OR HYDRO EXCAVATING. CONTRACTOR IS FULLY RESPONSIBLE FOR ANY DAMAGES CAUSED TO EXISTING UNDERGROUND OR OVERHEAD UTILITIES.
2. THE LOCATION OF SIGNAL POLES, CABINET, ELECTRICAL SERVICE, AND GROUND BOXES SHALL BE VERIFIED AND APPROVED BY CITY OF GEORGETOWN PRIOR TO CONSTRUCTION.
3. CONTRACTOR SHALL CONNECT FIELD WIRING TO CONTROLLER.
4. CONTRACTOR SHALL NOTIFY CITY OF GEORGETOWN A MINIMUM OF SEVEN (7) DAYS PRIOR TO BEGINNING TRAFFIC SIGNAL WORK.
5. CONTRACTOR SHALL NOTIFY CITY OF GEORGETOWN A MINIMUM OF FOURTEEN (14) DAYS PRIOR TO ACTIVATION OF THE NEW TRAFFIC SIGNAL.

PROPOSED POLE LOCATIONS

POLE NAME	A	B	C	D	E	F	G	H	I
STATION	174+88.4	173+49.1	173+22.2	174+84.3	174+76.8	174+61.7	173+42.9	173+41.6	174+74.9
OFFSET (FT)	62.8 - R	90.8 - R	57.6 - L	70.1 - L	64.4 - R	70.4 - R	83.0 - R	84.4 - L	81.7 - L

ALL STATION & OFFSET VALUES REFER TO CL SH 29

PROPOSED POLE NOTES

POLE A: INS TRF SIG PL AM(S)1 ARM(65')LUM&ILSN 48-A - (0686 7068)
POLE B: INS TRF SIG PL AM(S)1 ARM(50')LUM&ILSN 48-A - (0686 7056)
POLE C: INS TRF SIG PL AM(S)1 ARM(60')LUM&ILSN 48-A - (0686 7064)
POLE D: INS TRF SIG PL AM(S)1 ARM(60')LUM&ILSN 48-A - (0686 7064)
POLE E: PED POLE ASSEMBLY 24-A - (0687 7001)
POLE F: PED POLE ASSEMBLY 24-A - (0687 7001)
POLE G: PED POLE ASSEMBLY (SPREAD FOOTING) - (0687 7001)
POLE H: PED POLE ASSEMBLY 24-A - (0687 7001)
POLE I: PED POLE ASSEMBLY 24-A - (0687 7001)

PROPOSED LEGEND

- TRAFFIC SIGNAL POLE
- LUMINAIRE
- HORIZONTAL SIGNAL HEAD
- MODIFIED/RELOCATED HORIZONTAL SIGNAL HEAD
- VERTICAL SIGNAL HEAD
- INTERNALLY LIGHTED STREET NAME SIGN
- SIGN
- PEDESTAL POLE W/ PEDESTRIAN SIGNAL HEAD
- PEDESTAL POLE W/ SPREAD FOOTING FOUNDATION
- VIVDS CAMERA
- RADAR/VIVDS COMBO DETECTION DEVICE
- WIRELESS RADIO
- GROUND BOX (TYPE D W/APRON)
- CONDUIT (TRENCH)
- CONDUIT (BORE)
- CONTROLLER CABINET
- DIRECTION OF TRAFFIC
- RIGHT OF WAY (R.O.W.)
- ELECTRIC SERVICE PEDESTAL

N

0' 20' 40'

STATE OF TEXAS
MATTHEW A. GAAL
140753
LICENSED
PROFESSIONAL ENGINEER
Matthew Gaal
9/24/2025

GEORGETOWN TEXAS
more than welcome

Kimley»Horn F-928

Texas Department of Transportation

SH 29

WOLF LAKES DR
PROPOSED TRAFFIC
SIGNAL LAYOUT

SHEET 1 OF 1

CONT	SECT	JOB	HIGHWAY
0337	01	053	SH 29
DIST	COUNTY		SHEET NO.
AUS	WILLIAMSON		156

DATE: 9/24/2025 6:28:08 PM
FILE: pw://kh-pw.bentley.com:kh-pw-01/Documents/01 Active Projects/TX-GEO-069284005 - SH 29 Widening/4 - Design/Plan Set/8. Traffic/SH29_K_SIG_202.dgn

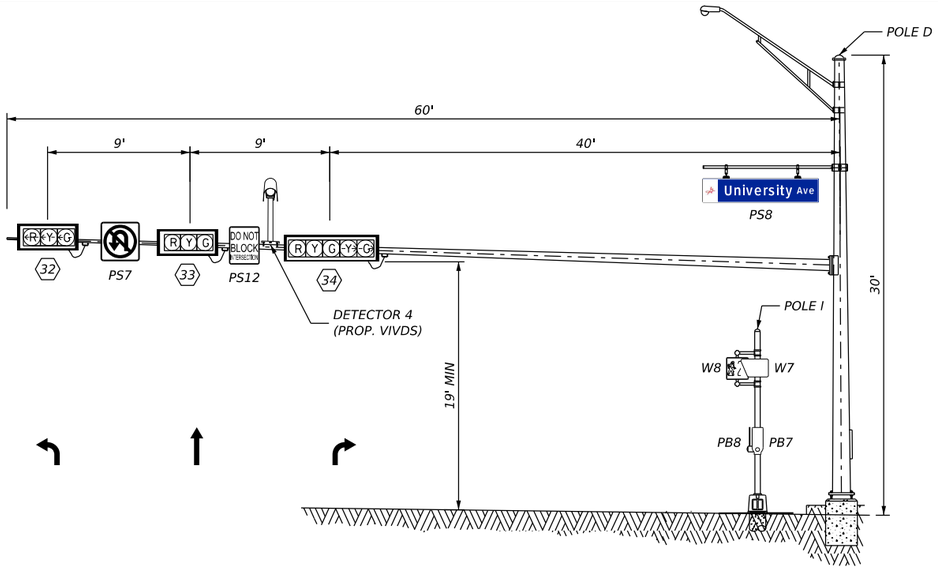

LOOKING NORTH ON PRIVATE DRIVEWAY

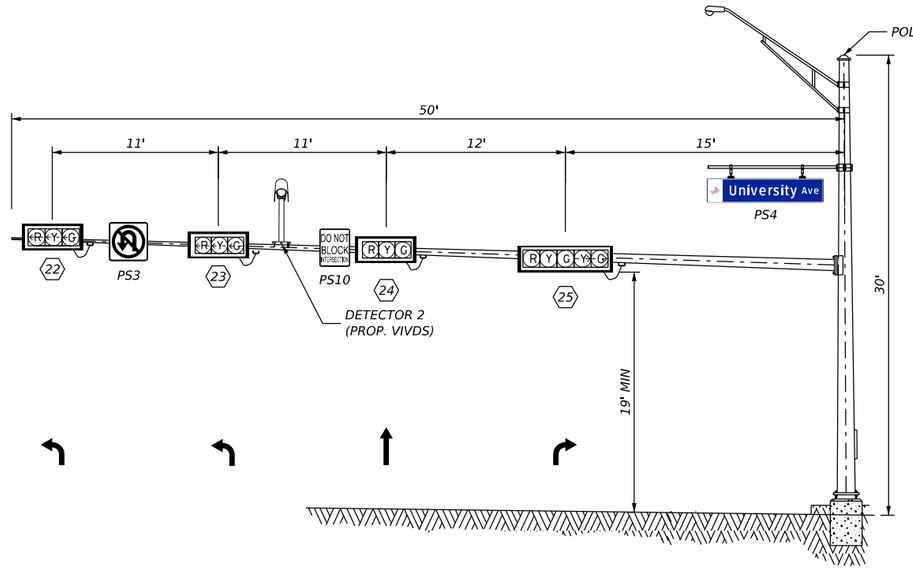

LOOKING SOUTH ON WOLF LAKES DRIVE

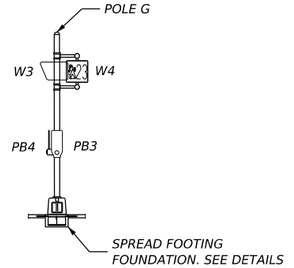

NOTES:

1. FOUNDATIONS ARE TO BE ADJUSTED IN THE FIELD IN ORDER TO MEET CLEARANCE.
2. LOCATION OF MAST ARMS IS APPROXIMATE. ANY CHANGES MUST BE APPROVED BY THE ENGINEER.
3. MAST ARM ATTACHMENT HEIGHT WILL BE CALCULATED BY THE CONTRACTOR IN THE FIELD AND APPROVED BY THE ENGINEER.
4. ELEVATION VIEWS ARE NOT TO SCALE.
5. MOUNT PEDESTRIAN SIGNAL HEADS 8-10' ABOVE ADJACENT WALKING SURFACE, MEASURED TO THE BOTTOM OF THE PEDESTRIAN SIGNAL HEAD HOUSING.
6. MOUNT APS PUSH BUTTON NO HIGHER THAN 42" ABOVE ADJACENT WALKING SURFACE.

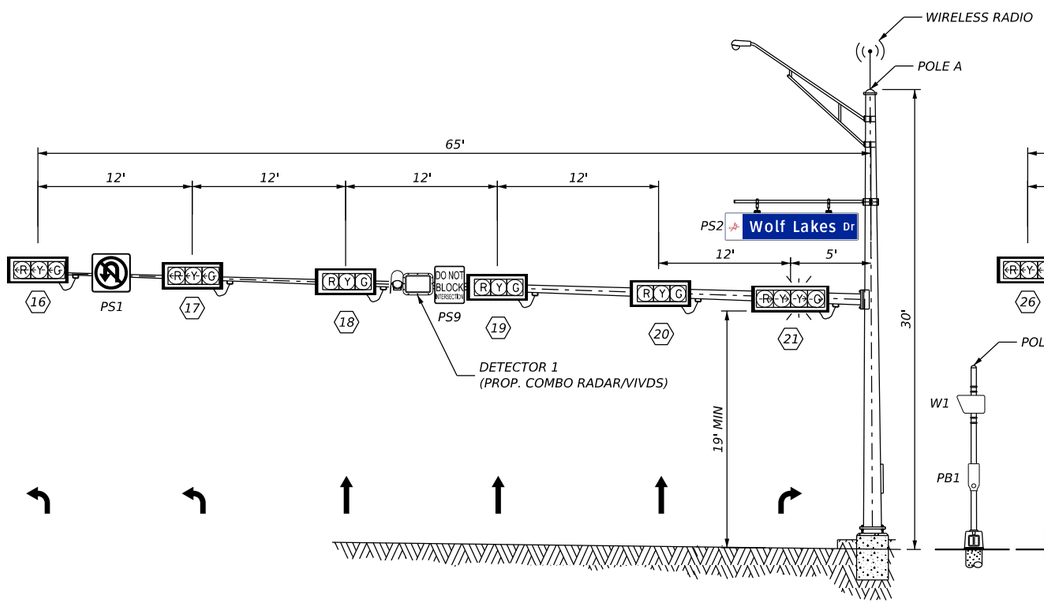

LOOKING EAST ON SH 29

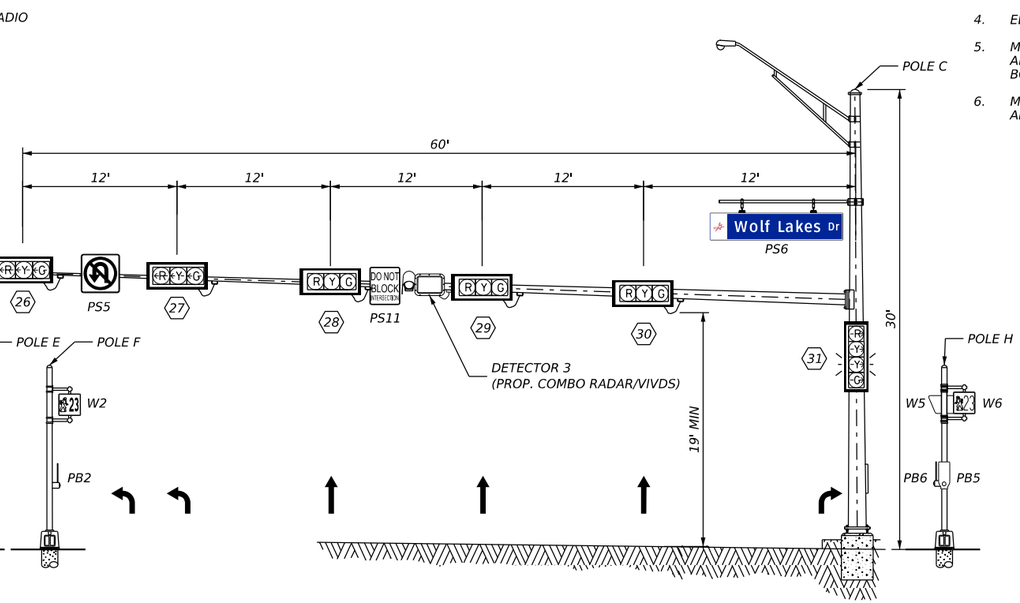

LOOKING WEST ON SH 29

Matthew Gaal
9/24/2025

STATE OF TEXAS
MATTHEW A. GAAL
140753
LICENSED
PROFESSIONAL ENGINEER

GEORGETOWN
TEXAS
more than welcome

Kimley»Horn
F-928

Texas Department of Transportation

SH 29

WOLF LAKES DR
TRAFFIC SIGNAL
ELEVATION VIEWS

SHEET 1 OF 1

CONT	SECT	JOB	HIGHWAY
0337	01	053	SH 29
DIST	COUNTY		SHEET NO.
AUS	WILLIAMSON		157

DATE: 9/24/2025 6:28:26 PM
FILE: pw://kh-pw.bentley.com:kh-pw-01/Documents/01 Active Projects/TX-GEO-069284005 - SH 29 Widening/4 - Design/Plan Set/8. Traffic/SH29_K_SIG_302.dgn

CKC
DWG
CKC
DWG

CABLE TERMINATION

CONDUCTOR COLOR	CABLE 1 HEADS 16,17 PHASE 5	CABLE 2 HEADS 18,19,20 PHASE 2	CABLE 3 HEAD 21 OVL A	CABLE 4 HEADS 22,23 PHASE 7	CABLE 5 HEAD 24,25 PHASE 4 + OVL B	CABLE 6 HEADS 26,27 PHASE 1	CABLE 7 HEADS 28,29,30 PHASE 6	CABLE 8 HEAD 31 OVL C	CABLE 9 HEAD 32 PHASE 3
	7C	5C	7C	7C	7C	7C	5C	7C	7C
BLACK	SPARE	Y	SPARE	SPARE	Y	SPARE	Y	SPARE	SPARE
WHITE	SIGNAL COMMON	SIGNAL COMMON	SIGNAL COMMON	SIGNAL COMMON	SIGNAL COMMON	SIGNAL COMMON	SIGNAL COMMON	SIGNAL COMMON	SIGNAL COMMON
RED	R ARW	R	R ARW	R ARW	R	R ARW	R	R ARW	R ARW
GREEN	SPARE	G	SPARE	SPARE	G	SPARE	G	SPARE	SPARE
ORANGE	Y ARW	SPARE	Y ARW	Y ARW	Y ARW	Y ARW	SPARE	Y ARW	Y ARW
BLUE	G ARW	-	G ARW	G ARW	G ARW	G ARW	-	G ARW	G ARW
WHITE/BLACK	SPARE	-	FY ARW	SPARE	SPARE	SPARE	-	FY ARW	SPARE

CONDUCTOR COLOR	CABLE 10 HEAD 33,34 PHASE 8 + OVL D	CABLE 11 W1 (PHASE 8 - PED)	CABLE 12 PB1 (PHASE 8 - PED)	CABLE 13 W2 (PHASE 2 - PED)	CABLE 14 PB2 (PHASE 2 - PED)	CABLE 15 W3 (PHASE 2 - PED)	CABLE 16 PB3 (PHASE 2 - PED)	CABLE 17 W4 (PHASE 4 - PED)	CABLE 18 PB4 (PHASE 4 - PED)
	7C	5C	2C	5C	2C	5C	2C	5C	2C
BLACK	Y	SPARE	PED CALL	DW	PED CALL	DW	PED CALL	SPARE	PED CALL
WHITE	SIGNAL COMMON	PED COMMON	APS COMMON	PED COMMON	APS COMMON	PED COMMON	APS COMMON	PED COMMON	APS COMMON
RED	R	DW	----	SPARE	----	SPARE	----	DW	----
GREEN	G	W	----	SPARE	----	SPARE	----	W	----
ORANGE	Y ARW	SPARE	----	W	----	W	----	SPARE	----
BLUE	G ARW	----	----	----	----	----	----	----	----
WHITE/BLACK	SPARE	----	----	----	----	----	----	----	----

CONDUCTOR COLOR	CABLE 19 W5 (PHASE 4 - PED)	CABLE 20 PB5 (PHASE 4 - PED)	CABLE 21 W6 (PHASE 6 - PED)	CABLE 22 PB6 (PHASE 6 - PED)	CABLE 23 W7 (PHASE 6 - PED)	CABLE 24 PB7 (PHASE 6 - PED)	CABLE 25 W8 (PHASE 8 - PED)	CABLE 26 PB8 (PHASE 8 - PED)
	5C	2C	5C	2C	5C	2C	5C	2C
BLACK	SPARE	PED CALL	DW	PED CALL	DW	PED CALL	SPARE	PED CALL
WHITE	PED COMMON	APS COMMON	PED COMMON	APS COMMON	PED COMMON	APS COMMON	PED COMMON	APS COMMON
RED	DW	----	SPARE	----	SPARE	----	DW	----
GREEN	W	----	SPARE	----	SPARE	----	W	----
ORANGE	SPARE	----	W	----	W	----	SPARE	----
BLUE	----	----	----	----	----	----	----	----
WHITE/BLACK	----	----	----	----	----	----	----	----

ELECTRICAL SERVICE

ELECTRICAL SERVICE DESCRIPTION	SERVICE CONDUIT SIZE*	SERVICE CONDUCTORS NO./SIZE	SAFETY SWITCH AMPS	MAIN CKT. BKR. POLE/AMPS	LIGHTING CONTACTOR AMPS	PANELBD/ LOADCENTER AMP RATING	BRANCH CIRCUIT ID	BRANCH CKT. BKR. POLE/AMPS	BRANCH CIRCUIT AMPS	KVA LOAD
ELC SRV TY D 120/240 060 (NS)SS(E)PS(U)	2"	3/#6	N/A	2P/60	N/A	100	SIGNAL	1P/50	24	4.8
							ILLUMINATION	2P/15	4	
							ILSN	2P/15	4	

*VERIFY SERVICE CONDUIT SIZE WITH UTILITY. SIZE MAY VARY DUE TO UTILITY COMPANY REQUIREMENTS.

PUSH BUTTON DETAILS

APS MESSAGE INFORMATION			
APS UNIT NO.	ACKNOWLEDGEMENT DEFAULT "WAIT"	EXTENDED PRESS MESSAGE "WAIT TO CROSS (STREET NAME) AT (CROSS STREET NAME)"	WALK PRESS MESSAGE "(STREET NAME); WALK SIGN IS ON TO CROSS (STREET NAME)"
PB1	YES	UNIVERSITY AT WOLF LAKES	UNIVERSITY
PB2	YES	WOLF LAKES AT UNIVERSITY	WOLF LAKES
PB3	YES	WOLF LAKES AT UNIVERSITY	WOLF LAKES
PB4	YES	UNIVERSITY AT WOLF LAKES	UNIVERSITY
PB5	YES	UNIVERSITY AT WOLF LAKES	UNIVERSITY
PB6	YES	WOLF LAKES AT UNIVERSITY	WOLF LAKES
PB7	YES	WOLF LAKES AT UNIVERSITY	WOLF LAKES
PB8	YES	UNIVERSITY AT WOLF LAKES	UNIVERSITY

PEDESTRIAN SIGN DETAIL			
POLE		SIGN	SIZE
E	PB1	R10-3eL	9" x 15"
F	PB2	R10-3eL	9" x 15"
G	PB3	R10-3eL	9" x 15"
	PB4	R10-3eR	9" x 15"
H	PB5	R10-3eL	9" x 15"
	PB6	R10-3eR	9" x 15"
I	PB7	R10-3eL	9" x 15"
	PB8	R10-3eR	9" x 15"

Matthew Gaal
9/24/2025

STATE OF TEXAS
MATTHEW A. GAAL
140753
LICENSED
PROFESSIONAL ENGINEER

GEORGETOWN
TEXAS
more than welcome

Kimley»Horn
F-928

Texas Department of Transportation

SH 29

WOLF LAKES DR
TRAFFIC SIGNAL
ELECTRICAL DATA

SHEET 1 OF 2

CONT	SECT	JOB	HIGHWAY
0337	01	053	SH 29
DIST	COUNTY		SHEET NO.
AUS	WILLIAMSON		158

DATE: 9/24/2025 6:28:42 PM
FILE: pw://kh-pw.bentley.com:kh-pw-01/Documents/01 Active Projects/TX-GEO-069284005 - SH 29 Widening/4 - Design/Plan Set/8. Traffic/SH29_K_SIG_402.dgn

GROUND WIRING

CONDUIT AND CABLE CHART WIRE SIZE AND TYPE																	
RUN #	ACTION	ITEM 618 CONDUIT SIZE AND TYPE				ACTION	ITEM 620 ELECTRICAL CONDUCTORS				ITEM 621 TRAY CABLE	ITEM 684 SIGNAL CABLE (TYPE A)				ITEM 6005 ETHERNET	LENGTH OF RUN	RUN #
		2" PVC SCH 40 TRENCH	2" PVC SCH 40 BORE	3" PVC SCH 40 TRENCH	3" PVC SCH 40 BORE		NO. 6 INSULATED (GROUND)	NO. 6 INSULATED (POWER)	NO. 8 INSULATED (GROUND)	NO. 8 INSULATED (LUM)	4 CNDR NO. 14 (ILSN)	2 CNDR NO. 12 (APS)	5 CNDR NO. 14 (PED)	5 CNDR NO. 14 (VEH)	7 CNDR NO. 14 (VEH)			
0	I	2				I	1	2	1	8	4						10	0
1	I	1		3		I	1	2	3			8	8	2	8	5	10	1
2	I	1		3		I	1	2	3			8	8	2	8	5	20	2
3	I	1		2		I			3	2	1			1	2	2	15	3
4	I	1				I			1			1	1				10	4
5	I	1				I			1			1	1				20	5
6	I		1		3	I	1	2	3	2	1	6	6	1	6	3	160	6
7	I	1		2		I			3	2	1				2	1	35	7
8	I	1				I			1			2	2				25	8
9	I				3	I			3	4	2	4	4	1	4	2	155	9
10	I	1		2		I			3	2	1			1	4	1	30	10
11	I	1				I			1			2	2				15	11
12	I				3	I			3	2	1	2	2		2	1	130	12
13	I	1				I			1			2	2				20	13
14	I	1		2		I			3	2	1				2	1	35	14
SUBTOTAL (LF)		235	160	320	1335	-	190	380	1860	1430	550	2230	2230	420	2040	1200	SUBTOTAL (LF)	

ACTION CODE: I - INSTALL

POLE WIRING

INSIDE POLES	TYPE	ELEC CONDR	TRAY CABLE	SIGNAL CABLE TY A			ETHERNET
		#8 INS (LUM)	4C # 14	2C # 12	5C # 14	7C # 14	
A	SIGNAL POLE (30' TALL)	60	25		60	60	50
B	SIGNAL POLE (30' TALL)	60	25			80	20
C	SIGNAL POLE (30' TALL)	60	25		60	60	20
D	SIGNAL POLE (30' TALL)	60	25			60	20
E	PEDESTRIAN POLE (10' TALL)			5	10		
F	PEDESTRIAN POLE (10' TALL)			5	10		
G	PEDESTRIAN POLE (10' TALL)			10	20		
H	PEDESTRIAN POLE (10' TALL)			10	20		
I	PEDESTRIAN POLE (10' TALL)			10	20		
TOTAL QTY (LF)		240	100	40	200	260	110

CABINET WIRING

INSIDE CABINET	ELEC CONDR		SIGNAL CABLE TY A				ETHERNET
	#6 INS (GROUND)	#6 INS (POWER)	2C # 12	5C # 14 (PED)	5C # 14 (VEH)	7C # 14	
TOTAL QTY	5	10	40	40	10	40	25

** FURNISH AND INSTALL DETECTION CABLE PER MANUFACTURER RECOMMENDATIONS.

ARM WIRING

INSIDE ARMS	SIGNAL CABLE TY A		ETHERNET
	5C # 14	7C # 14	
POLE A - 65' ARM			
HEADS 16 & 17		120	
HEADS 18, 19 & 20	105		
HEAD 21		10	
DETECTOR 1 (COMBO RADAR/VIVDS)			35
POLE B - 50' ARM			
HEADS 22 & 23		90	
HEADS 24 & 25		50	
DETECTOR 2 (VIVDS)			35
POLE C - 60' ARM			
HEADS 26 & 27		110	
HEADS 28, 29 & 30	90		
DETECTOR 3 (COMBO RADAR/VIVDS)			35
POLE D - 60' ARM			
HEAD 32		60	
HEADS 33 & 34		90	
DETECTOR 4 (VIVDS)			40
TOTAL QTY (LF)	195	530	145

NOTES:

FURNISH THE MATERIALS LISTED BELOW (OR APPROVED EQUAL) FOR COMPATIBILITY WITH CITY OF GEORGETOWN TRAFFIC MANAGEMENT SYSTEM. PROVIDE SHOP DRAWINGS FOR APPROVAL BY THE ENGINEER PRIOR TO ORDERING EQUIPMENT.

1. EAGLE CABINET ASSEMBLY, NEMA SPECIFIC
2. SIEMENS M60 LINUX SERIES CONTROLLER (8132-0000-5551)
3. ITERIS MYERS BBU SYSTEM WITH GENERATOR INPUT OPTION AND OPERATION
4. POLARA IN2 INAVIGATOR 2-WIRE PUSH BUTTON SYSTEM
5. POLARA ICCU-S INTELLIGENT CENTRAL CONTROL UNIT
6. ITERIS VANTAGE NEXT CAMERA AND DETECTION SYSTEM
7. ITERIS VANTAGE WITH VANTAGE VECTOR DETECTION
8. ULTRADISH TP21 PARABOLIC DISH ANTENNA WITH TWISTPORT CONNECTOR (UD-TP-21)
9. PEGASUS TWISTPORT SERIES RADIO (ULTRADISH TP 400)

Matthew Gaal
9/24/2025

STATE OF TEXAS
MATTHEW A. GAAL
140753
LICENSED
PROFESSIONAL ENGINEER

GEORGETOWN TEXAS
more than welcome

Kimley»Horn F-928

Texas Department of Transportation

SH 29

WOLF LAKES DR
TRAFFIC SIGNAL
ELECTRICAL DATA

SHEET 2 OF 2

CONT	SECT	JOB	HIGHWAY
0337	01	053	SH 29
DIST	COUNTY		SHEET NO.
AUS	WILLIAMSON		159

DATE: 9/24/2025 6:28:59 PM
FILE: pw://kh-pw.bentley.com:kh-pw-01/Documents/01 Active Projects/TX-GEO-069284005 - SH 29 Widening/4 - Design/Plan Set/8. Traffic/SH29_K_SIG_402A.dgn

DETECTOR	APPROACH	TYPE	MOUNTING LOCATION
1	EASTBOUND THRU (PHASE 2 - P1)	PRESENCE	POLE A
	EASTBOUND THRU (PHASE 2 - A1)	ADVANCE	
	EASTBOUND LEFT (PHASE 5 - P1)	PRESENCE	
2	SOUTHBOUND THRU (PHASE 4 - P1)	PRESENCE	POLE B
	SOUTHBOUND LEFT (PHASE 7 - P1)	PRESENCE	
3	WESTBOUND THRU (PHASE 6 - P1)	PRESENCE	POLE C
	WESTBOUND THRU (PHASE 6 - A1)	ADVANCE	
	WESTBOUND LEFT (PHASE 1 - P1)	PRESENCE	
4	NORTHBOUND THRU (PHASE 8 - P1)	PRESENCE	POLE D
	NORTHBOUND LEFT (PHASE 3 - P1)	PRESENCE	

ORIENTATION DIAGRAM

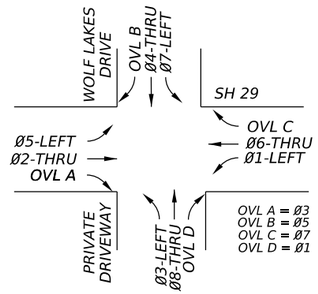

PROPOSED LEGEND

- TRAFFIC SIGNAL POLE
- LUMINAIRE
- HORIZONTAL SIGNAL HEAD
- MODIFIED/RELOCATED HORIZONTAL SIGNAL HEAD
- VERTICAL SIGNAL HEAD
- INTERNALLY LIGHTED STREET NAME SIGN
- SIGN
- PEDESTAL POLE W/ PEDESTRIAN SIGNAL HEAD
- PEDESTAL POLE W/ SPREAD FOOTING FOUNDATION
- VIVDS CAMERA
- RADAR/VIVDS COMBO DETECTION DEVICE
- WIRELESS RADIO
- GROUND BOX (TYPE D W/APRON)
- CONDUIT (TRENCH)
- CONDUIT (BORE)
- CONTROLLER CABINET
- DIRECTION OF TRAFFIC
- RIGHT OF WAY (R.O.W.)
- ELECTRIC SERVICE PEDESTAL

PHASING DIAGRAM

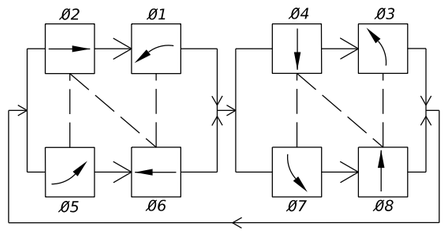

NOTES

1. CONTRACTOR SHALL COORDINATE WITH CITY OF GEORGETOWN FOR EXACT PLACEMENT OF THE DETECTION ZONES.
2. PHASE 1 AND 5 SHALL NOT RUN CONCURRENTLY.
3. PHASE 3 AND 7 SHALL NOT RUN CONCURRENTLY.

0' 20' 40'

Matthew Gaal
9/24/2025

STATE OF TEXAS
MATTHEW A GAAL
140753
LICENSED
PROFESSIONAL ENGINEER

GEORGETOWN TEXAS
more than welcome

Kimley»Horn F-928

Texas Department of Transportation

SH 29

WOLF LAKES DR
TRAFFIC SIGNAL
PHASING, DETECTION &
LOAD SWITCH LAYOUT

SHEET 1 OF 1

CONT	SECT	JOB	HIGHWAY
0337	01	053	SH 29
DIST	COUNTY		SHEET NO.
AUS	WILLIAMSON		160

DATE: 9/24/2025 6:29:17 PM
FILE: pw://kh-pw.bentley.com:kh-pw-01/Documents/01 Active Projects/TX-GEO-069284005 - SH 29 Widening/4 - Design/Plan Set/8. Traffic/SH29_K_SIG_502.dgn

CK DW CK DW

EXISTING SIGNAL HEADS

3-SECTION 12" SIGNAL HEAD

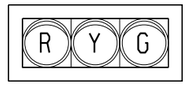

1 2 4
5 7 8

(HEADS 1,2 AND 5 TO BE REMOVED)

5-SECTION 12" SIGNAL HEAD

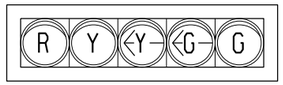

3

(HEAD 3 TO BE REMOVED)

3-SECTION 12" SIGNAL HEAD

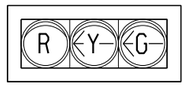

6

COUNTDOWN PEDESTRIAN SIGNAL HEAD



EW1,EW2,EW3
EW4,EW5,EW6

(HEADS EW1 AND EW2 TO BE RELOCATED)

EXISTING SIGNS TO BE REMOVED



R6-1(L)
ES2



R10-12
ES3

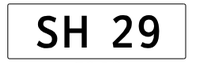

D3-1G
ES4



D3-1G
ES1,ES5

EXISTING SIGNS TO REMAIN



R6-1(R)
ES6

EXISTING LEGEND

- TRAFFIC SIGNAL POLE
- LUMINAIRE
- HORIZONTAL SIGNAL HEAD
- VERTICAL SIGNAL HEAD
- SIGN
- PEDESTAL POLE W/ PEDESTRIAN SIGNAL HEAD
- VIVDS CAMERA
- WIRELESS RADIO
- GROUND BOX (TYPE D W/ APRON)
- CONDUIT
- ELECTRIC SERVICE PEDESTAL
- CONTROLLER CABINET
- DIRECTION OF TRAFFIC
- RIGHT OF WAY (R.O.W.)

0' 20' 40'

NOTES:

1. EXISTING UNDERGROUND CONDUITS NO LONGER NECESSARY ARE TO BE REMOVED OR ABANDONED IN PLACE. REMOVE ALL CABLES AND CONDUCTORS FOR EQUIPMENT SPECIFIED FOR REMOVAL FROM THE DEVICE TO ITS TERMINATION POINT.
2. ALL TRAFFIC SIGNAL EQUIPMENT SPECIFIED FOR REMOVAL THAT IS DEEMED SALVAGEABLE BY THE CITY OF GEORGETOWN SHALL REMAIN THE PROPERTY OF THE CITY OF GEORGETOWN AND BE DELIVERED TO A LOCATION SPECIFIED BY THE CITY OF GEORGETOWN. ANY EQUIPMENT NOT DEEMED SALVAGEABLE BY THE CITY OF GEORGETOWN SHALL BECOME PROPERTY OF THE CONTRACTOR AND THE CONTRACTOR SHALL DISPOSE OF IN COMPLIANCE WITH ANY APPLICABLE FEDERAL, STATE, AND/OR LOCAL LAWS. THIS WORK SHALL BE CONSIDERED SUBSIDIARY TO ITEM 680 WITH NO ADDITIONAL PAY GIVEN.
3. THE PRESENCE/ABSENCE AND LOCATION OF EXISTING TRAFFIC SIGNAL EQUIPMENT SHOWN IN THE PLANS IS BASED ON THE BEST RECORDS AVAILABLE TO THE ENGINEER. CONTRACTOR SHALL STOP WORK IMMEDIATELY AND CONTACT THE ENGINEER FOR A RESOLUTION SHOULD FIELD CONDITIONS DIFFER FROM WHAT IS DEPICTED IN THE PLANS.
4. THE CONTRACTOR SHALL VERIFY, PRIOR TO STARTING WORK RELATED TO THE TRAFFIC SIGNAL, THAT GROUND BOXES AND/OR CONDUIT RUNS SHOWN FOR REMOVAL CONTAIN CABLING ONLY FOR EXISTING TRAFFIC SIGNAL EQUIPMENT. SHOULD EXISTING GROUND BOXES AND/OR CONDUITS CONTAIN WIRING FOR ANY EQUIPMENT OTHER THAN THE EXISTING TRAFFIC SIGNAL, CONTRACTOR SHALL STOP WORK IMMEDIATELY AND CONTACT THE ENGINEER FOR A RESOLUTION.

Matthew Gaal
9/24/2025

STATE OF TEXAS
MATTHEW A. GAAL
140753
LICENSED
PROFESSIONAL ENGINEER

GEORGETOWN TEXAS
more than welcome

Kimley»Horn F-928

Texas Department of Transportation

SH 29

I-35
EXISTING TRAFFIC SIGNAL LAYOUT

SHEET 1 OF 2

CONT	SECT	JOB	HIGHWAY
0337	01	053	SH 29
DIST	COUNTY		SHEET NO.
AUS	WILLIAMSON		161

DATE: 9/24/2025 6:29:34 PM
FILE: pw://kh-pw.bentley.com:kh-pw-01/Documents/01 Active Projects/TX-GEO-069284005 - SH 29 Widening/4 - Design/Plan Set/8. Traffic/SH29_K_SIG_103.dgn

CK DW CK DW

EXISTING SIGNAL HEADS

3-SECTION 12" SIGNAL HEAD

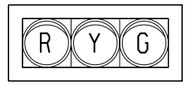

5-SECTION 12" SIGNAL HEAD

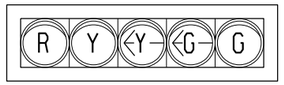

9 10 11 12 13 15 16

(HEADS 11 AND 12 TO BE REMOVED)

14

(HEAD 14 TO BE REMOVED)

COUNTDOWN PEDESTRIAN SIGNAL HEAD



EW7,EW8,EW9
EW10,EW11,EW12

EXISTING SIGNS TO REMAIN



R3-8
ES9



R6-1(R)
ES7



R6-1(L)
ES12

EXISTING SIGNS TO REMOVE

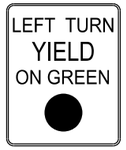

R10-12
ES11



D3-1G
ES10



D3-1G
ES8,ES13

EXISTING LEGEND

- TRAFFIC SIGNAL POLE
- LUMINAIRE
- HORIZONTAL SIGNAL HEAD
- VERTICAL SIGNAL HEAD
- SIGN
- PEDESTAL POLE W/ PEDESTRIAN SIGNAL HEAD
- VIVDS CAMERA
- WIRELESS RADIO
- GROUND BOX (TYPE D W/ APRON)
- CONDUIT
- ELECTRIC SERVICE PEDESTAL
- CONTROLLER CABINET
- DIRECTION OF TRAFFIC
- RIGHT OF WAY (R.O.W.)

0' 20' 40'

NOTES:

1. EXISTING UNDERGROUND CONDUITS NO LONGER NECESSARY ARE TO BE REMOVED OR ABANDONED IN PLACE. REMOVE ALL CABLES AND CONDUCTORS FOR EQUIPMENT SPECIFIED FOR REMOVAL FROM THE DEVICE TO ITS TERMINATION POINT.
2. ALL TRAFFIC SIGNAL EQUIPMENT SPECIFIED FOR REMOVAL THAT IS DEEMED SALVAGEABLE BY THE CITY OF GEORGETOWN SHALL REMAIN THE PROPERTY OF THE CITY OF GEORGETOWN AND BE DELIVERED TO A LOCATION SPECIFIED BY THE CITY OF GEORGETOWN. ANY EQUIPMENT NOT DEEMED SALVAGEABLE BY THE CITY OF GEORGETOWN SHALL BECOME PROPERTY OF THE CONTRACTOR AND THE CONTRACTOR SHALL DISPOSE OF IN COMPLIANCE WITH ANY APPLICABLE FEDERAL, STATE, AND/OR LOCAL LAWS. THIS WORK SHALL BE CONSIDERED SUBSIDIARY TO ITEM 680 WITH NO ADDITIONAL PAY GIVEN.
3. THE PRESENCE/ABSENCE AND LOCATION OF EXISTING TRAFFIC SIGNAL EQUIPMENT SHOWN IN THE PLANS IS BASED ON THE BEST RECORDS AVAILABLE TO THE ENGINEER. CONTRACTOR SHALL STOP WORK IMMEDIATELY AND CONTACT THE ENGINEER FOR A RESOLUTION SHOULD FIELD CONDITIONS DIFFER FROM WHAT IS DEPICTED IN THE PLANS.
4. THE CONTRACTOR SHALL VERIFY, PRIOR TO STARTING WORK RELATED TO THE TRAFFIC SIGNAL, THAT GROUND BOXES AND/OR CONDUIT RUNS SHOWN FOR REMOVAL CONTAIN CABLING ONLY FOR EXISTING TRAFFIC SIGNAL EQUIPMENT. SHOULD EXISTING GROUND BOXES AND/OR CONDUITS CONTAIN WIRING FOR ANY EQUIPMENT OTHER THAN THE EXISTING TRAFFIC SIGNAL, CONTRACTOR SHALL STOP WORK IMMEDIATELY AND CONTACT THE ENGINEER FOR A RESOLUTION.

Matthew Gaal
9/24/2025

STATE OF TEXAS
MATTHEW A. GAAL
140753
LICENSED
PROFESSIONAL ENGINEER

GEORGETOWN TEXAS
more than welcome

Kimley»Horn F-928

Texas Department of Transportation

SH 29

I-35
EXISTING TRAFFIC SIGNAL LAYOUT

SHEET 2 OF 2

CONT	SECT	JOB	HIGHWAY
0337	01	053	SH 29
DIST	COUNTY		SHEET NO.
AUS	WILLIAMSON		162

DATE: 9/24/2025 6:29:51 PM
FILE: pw://kh-pw.bentley.com:kh-pw-01/Documents/01 Active Projects/TX-GEO-069284005 - SH 29 Widening/4 - Design/Plan Set/8. Traffic/SH29_K_SIG_104.dgn

PROPOSED SIGNAL HEADS

3-SECTION
12" SIGNAL HEAD

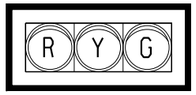

17 18

4-SECTION
12" SIGNAL HEAD (FYA)

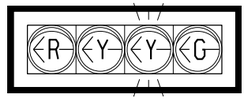

19

4-SECTION
12" SIGNAL HEAD

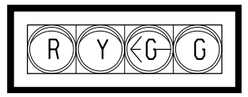

20

RELOCATED SIGNAL HEADS

COUNTDOWN
PEDESTRIAN
SIGNAL HEAD



EW1,EW2

RELOCATION OF PEDESTRIAN SIGNAL HEADS SHALL BE CONSIDERED SUBSIDIARY TO ITEM 680.

MODIFIED SIGNAL HEADS

3-SECTION
12" SIGNAL HEAD



4 7 8

RETROFIT REFL BRDR SHEETING

3-SECTION
12" SIGNAL HEAD



6

REMOVE EXISTING RED BALL INDICATION
INSTALL RED ARROW INDICATION

RETROFIT REFL BRDR SHEETING

PROPOSED SIGNS



R3-8(L)
30" X 30"
PS4



R10-17T
36" X 42"
PS3

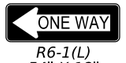

R6-1(L)
54" X 18"
PS2



ILSN
PS1,PS6
96" X 24"



ILSN
PS5
120" X 24"

PROPOSED LEGEND

- TRAFFIC SIGNAL POLE
- LUMINAIRE
- HORIZONTAL SIGNAL HEAD
- MODIFIED/RELOCATED HORIZONTAL SIGNAL HEAD
- VERTICAL SIGNAL HEAD
- INTERNALLY LIGHTED STREET NAME SIGN
- SIGN
- PEDESTAL POLE W/ PEDESTRIAN SIGNAL HEAD
- PEDESTAL POLE W/ SPREAD FOOTING FOUNDATION
- VIVDS CAMERA
- RADAR/VIVDS COMBO DETECTION DEVICE
- WIRELESS RADIO
- GROUND BOX (TYPE D W/APRON)
- CONDUIT (TRENCH)
- CONDUIT (BORE)
- CONTROLLER CABINET
- DIRECTION OF TRAFFIC
- RIGHT OF WAY (R.O.W.)
- ELECTRIC SERVICE PEDESTAL

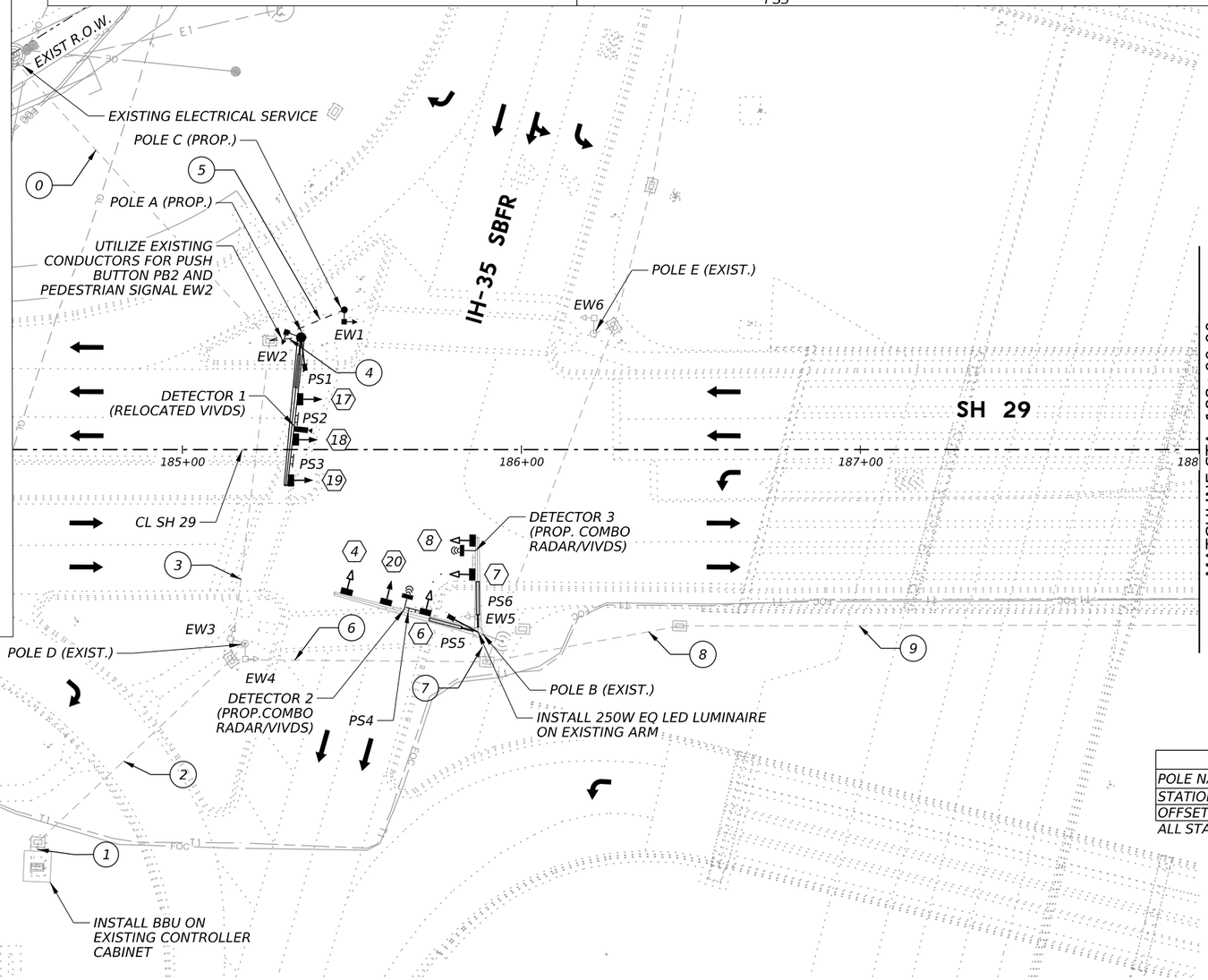

PROPOSED POLE LOCATIONS		
POLE NAME	A	C
STATION	185+33.0	185+47.7
OFFSET (FT)	33.1 - L	41.2 - L

ALL STATION & OFFSET VALUES REFER TO CL SH 29

0' 20' 40'

NOTES:

1. UTILITIES SHOWN ARE BASED ON THE BEST INFORMATION AVAILABLE TO THE ENGINEER. CONTRACTOR IS RESPONSIBLE FOR VERIFYING THE EXACT LOCATION OF ALL UTILITIES USING ANY MEANS NECESSARY, INCLUDING BUT NOT LIMITED TO SOLICITING 811 MARKINGS, POTHOLING, AND/OR HYDRO EXCAVATING. CONTRACTOR IS FULLY RESPONSIBLE FOR ANY DAMAGES CAUSED TO EXISTING UNDERGROUND OR OVERHEAD UTILITIES.
2. CONTRACTOR TO REFER TO PHASE DIAGRAM FOR FLASHING YELLOW ARROW OVERLAP TERMINATIONS INSIDE CABINET. CONTRACTOR TO UPGRADE MMU EQUIPMENT, IF NEEDED, TO ENSURE FLASHING YELLOW ARROW CAPABILITIES (SUB TO ITEM 680).
3. CONTRACTOR SHALL NOTIFY CITY OF GEORGETOWN A MINIMUM OF SEVEN (7) DAYS PRIOR TO BEGINNING TRAFFIC SIGNAL WORK.

PROPOSED POLE NOTES

POLE A: INS TRF SIG PL AM(S)1 ARM (44')LUM&ILSN 36-A - (0686 7048)
POLE B: INS TRF SIG PL AM(S) ILSN ARM (9') - (0686 7002)
POLE B: INS TRF SIG PL AM(S) ILSN ARM (11') - (0686 7319)
POLE C: PED POLE ASSEMBLY 24-A - (0687 7001)

Matthew Gaal
9/24/2025

STATE OF TEXAS
MATTHEW A. GAAL
140753
LICENSED
PROFESSIONAL ENGINEER

GEORGETOWN
TEXAS
more than welcome

Kimley»Horn
F-928

Texas Department of Transportation

SH 29

I-35
PROPOSED TRAFFIC SIGNAL LAYOUT

SHEET 1 OF 2

CONT	SECT	JOB	HIGHWAY
0337	01	053	SH 29
DIST	COUNTY		SHEET NO.
AUS	WILLIAMSON		163

DATE: 9/24/2025 6:30:08 PM
FILE: pw://kh-pw.bentley.com:kh-pw-01/Documents/01 Active Projects/TX-GEO-069284005 - SH 29 Widening/4 - Design/Plan Set/8. Traffic/SH29_K_SIG_203.dgn

CK DW CK DW

PROPOSED SIGNAL HEADS

3-SECTION
12" SIGNAL HEAD

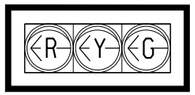

21

4-SECTION
12" SIGNAL HEAD

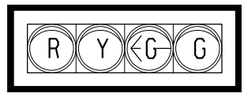

22

4-SECTION
12" SIGNAL HEAD (FYA)

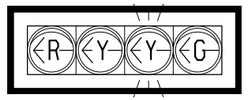

23

MODIFIED SIGNAL HEADS

3-SECTION
12" SIGNAL HEAD



9 10 13 15 16

RETROFIT REFL BRDR SHEETING

PROPOSED SIGNS



R10-17T
36" X 42"
PS9



ILSN
96" X 24"
PS7,PS10



ILSN
120" X 24"
PS8

PROPOSED LEGEND

- TRAFFIC SIGNAL POLE
- LUMINAIRE
- HORIZONTAL SIGNAL HEAD
- MODIFIED/RELOCATED HORIZONTAL SIGNAL HEAD
- VERTICAL SIGNAL HEAD
- INTERNALLY LIGHTED STREET NAME SIGN
- SIGN
- PEDESTAL POLE W/ PEDESTRIAN SIGNAL HEAD
- PEDESTAL POLE W/ SPREAD FOOTING FOUNDATION
- VIVDS CAMERA
- RADAR/VIVDS COMBO DETECTION DEVICE
- WIRELESS RADIO
- GROUND BOX (TYPE D W/APRON)
- CONDUIT (TRENCH)
- CONDUIT (BORE)
- CONTROLLER CABINET
- DIRECTION OF TRAFFIC
- RIGHT OF WAY (R.O.W.)
- ELECTRIC SERVICE PEDESTAL

N

0' 20' 40'

NOTES:

1. UTILITIES SHOWN ARE BASED ON THE BEST INFORMATION AVAILABLE TO THE ENGINEER. CONTRACTOR IS RESPONSIBLE FOR VERIFYING THE EXACT LOCATION OF ALL UTILITIES USING ANY MEANS NECESSARY, INCLUDING BUT NOT LIMITED TO SOLICITING 811 MARKINGS, POTHOLING, AND/OR HYDRO EXCAVATING. CONTRACTOR IS FULLY RESPONSIBLE FOR ANY DAMAGES CAUSED TO EXISTING UNDERGROUND OR OVERHEAD UTILITIES.
2. CONTRACTOR TO REFER TO PHASE DIAGRAM FOR FLASHING YELLOW ARROW OVERLAP TERMINATIONS INSIDE CABINET. CONTRACTOR TO UPGRADE MMU EQUIPMENT, IF NEEDED, TO ENSURE FLASHING YELLOW ARROW CAPABILITIES (SUB TO ITEM 680).
3. CONTRACTOR SHALL NOTIFY CITY OF GEORGETOWN A MINIMUM OF SEVEN (7) DAYS PRIOR TO BEGINNING TRAFFIC SIGNAL WORK.

PROPOSED POLE NOTES

POLE G: INS TRF SIG PL AM(S) ILSN ARM (11') - (0686 7319)
POLE H: INS TRF SIG PL AM(S) ILSN ARM (9') - (0686 7002)

Matthew Gaal
9/24/2025

STATE OF TEXAS
MATTHEW A. GAAL
140753
LICENSED
PROFESSIONAL ENGINEER

GEORGETOWN
TEXAS
more than welcome

Kimley»Horn
F-928

Texas Department of Transportation

SH 29

I-35
PROPOSED TRAFFIC SIGNAL LAYOUT

SHEET 2 OF 2

CONT	SECT	JOB	HIGHWAY
0337	01	053	SH 29
DIST	COUNTY		SHEET NO.
AUS	WILLIAMSON		164

DATE: 9/24/2025 6:30:25 PM
FILE: pw://kh-pw.bentley.com:kh-pw-01/Documents/01 Active Projects/TX-GEO-069284005 - SH 29 Widening/4 - Design/Plan Set/8. Traffic/SH29_K_SIG_204.dgn

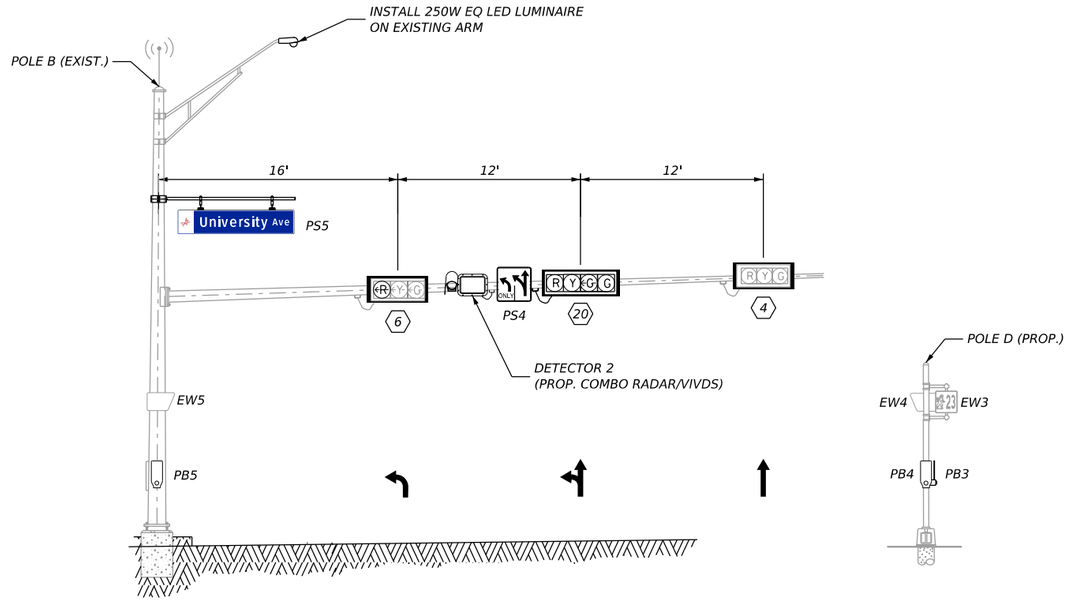

LOOKING SOUTH ON IH-35 SBFR

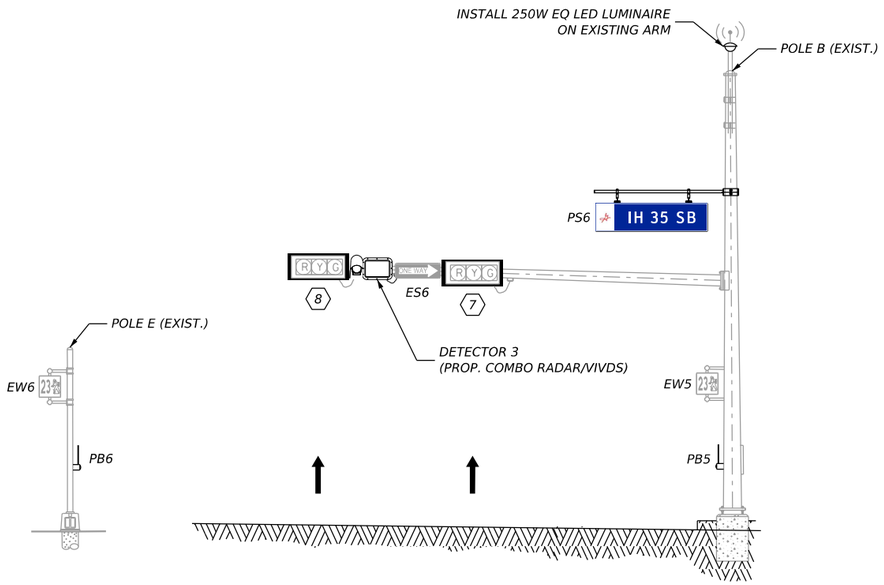

LOOKING EAST ON SH 29

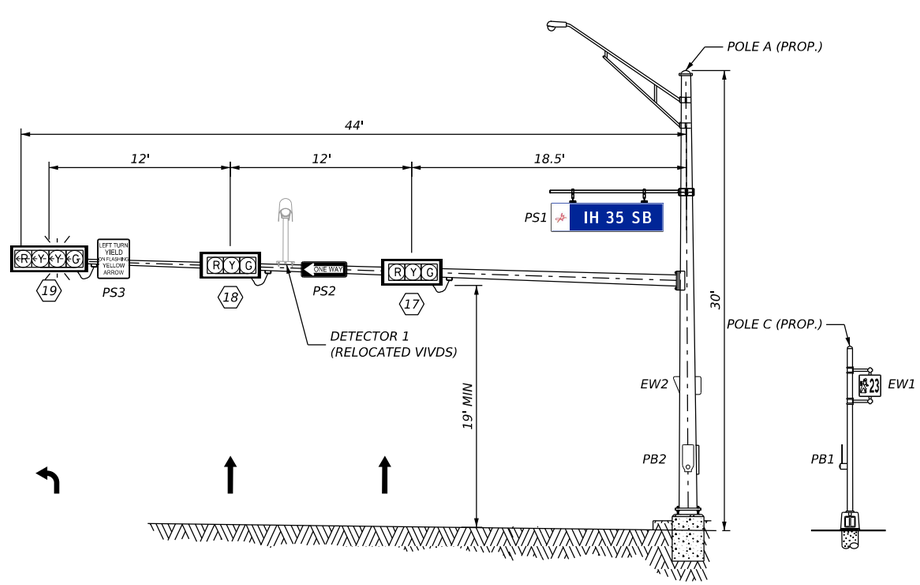

LOOKING WEST ON SH 29

NOTES:

1. FOUNDATIONS ARE TO BE ADJUSTED IN THE FIELD IN ORDER TO MEET CLEARANCE.
2. LOCATION OF MAST ARMS IS APPROXIMATE. ANY CHANGES MUST BE APPROVED BY THE ENGINEER.
3. MAST ARM ATTACHMENT HEIGHT WILL BE CALCULATED BY THE CONTRACTOR IN THE FIELD AND APPROVED BY THE ENGINEER.
4. ELEVATION VIEWS ARE NOT TO SCALE.

STATE OF TEXAS
MATTHEW A. GAAL
140753
LICENSED
PROFESSIONAL ENGINEER
Matthew Gaal
9/24/2025

GEORGETOWN TEXAS
more than welcome

Kimley»Horn F-928

Texas Department of Transportation

SH 29

I-35 TRAFFIC SIGNAL ELEVATION VIEWS

SHEET 1 OF 2

CONT	SECT	JOB	HIGHWAY
0337	01	053	SH 29
DIST	COUNTY		SHEET NO.
AUS	WILLIAMSON		165

DATE: 9/24/2025 6:30:42 PM
FILE: pw://kh-pw.bentley.com:kh-pw-01/Documents/01 Active Projects/TX-GEO-069284005 - SH 29 Widening/4 - Design/Plan Set/8. Traffic/SH29_K_SIG_303.dgn

DW: CK: DW: CK:

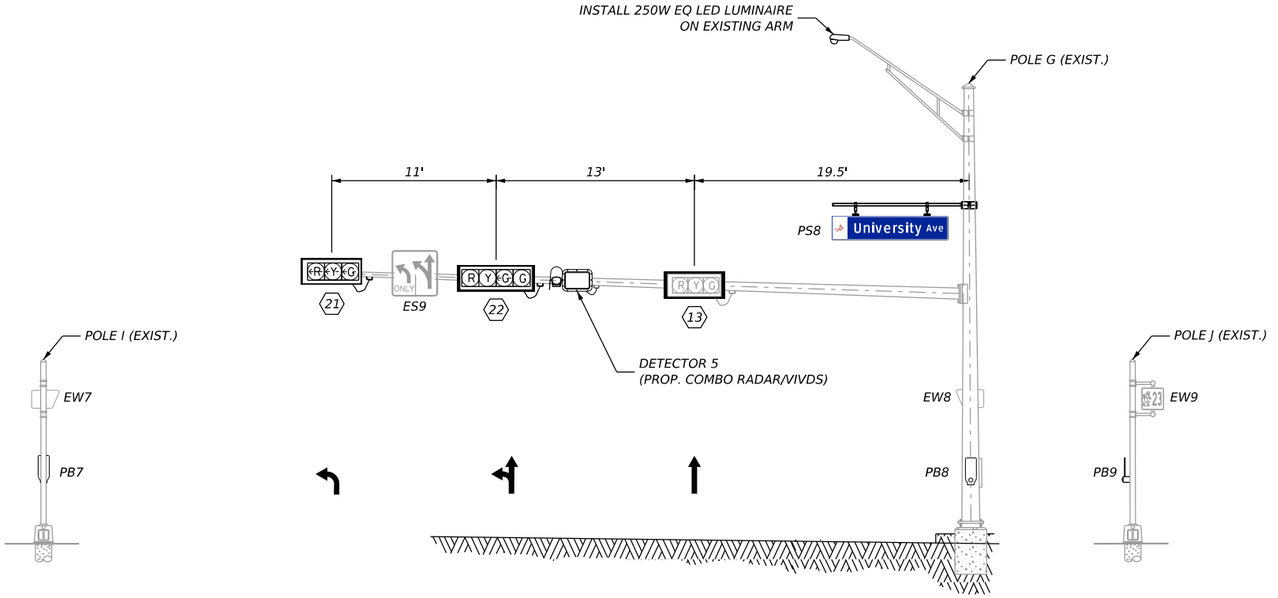

LOOKING NORTH ON IH-35 NBFR

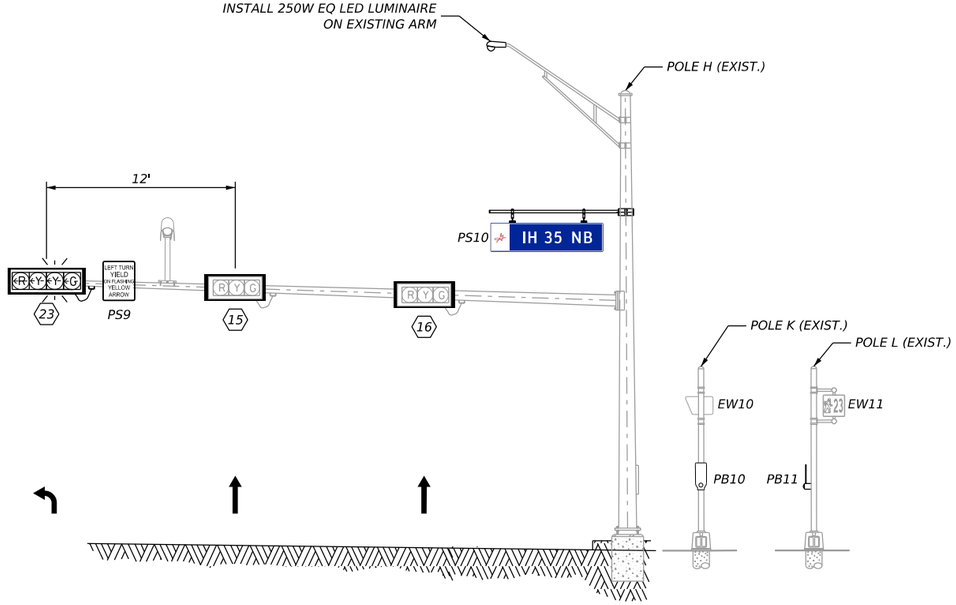

LOOKING EAST ON SH 29

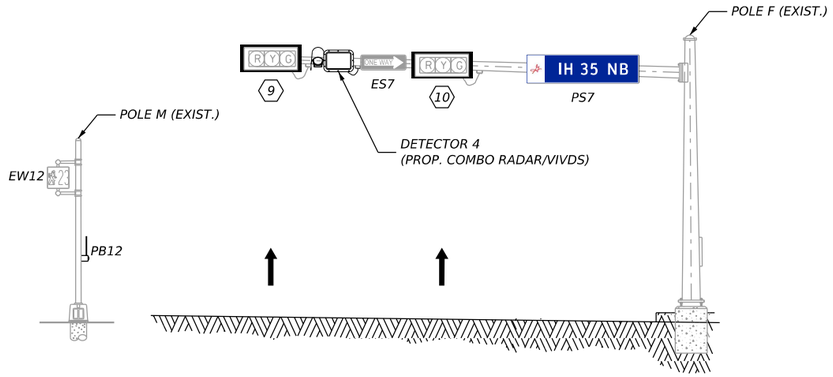

LOOKING WEST ON SH 29

NOTES:

1. FOUNDATIONS ARE TO BE ADJUSTED IN THE FIELD IN ORDER TO MEET CLEARANCE.
2. LOCATION OF MAST ARMS IS APPROXIMATE. ANY CHANGES MUST BE APPROVED BY THE ENGINEER.
3. MAST ARM ATTACHMENT HEIGHT WILL BE CALCULATED BY THE CONTRACTOR IN THE FIELD AND APPROVED BY THE ENGINEER.
4. ELEVATION VIEWS ARE NOT TO SCALE.

STATE OF TEXAS
MATTHEW A. GAAL
140753
LICENSED
PROFESSIONAL ENGINEER
Matthew Gaal
9/24/2025

GEORGETOWN
TEXAS
more than welcome

Kimley»Horn
F-928

Texas Department of Transportation

SH 29

I-35
TRAFFIC SIGNAL
ELEVATION VIEWS

SHEET 2 OF 2

CONT	SECT	JOB	HIGHWAY
0337	01	053	SH 29
DIST	COUNTY		SHEET NO.
AUS	WILLIAMSON		166

DATE: 9/24/2025 6:31:00 PM
FILE: pw://kh-pw.bentley.com:kh-pw-01/Documents/01 Active Projects/TX-GEO-069284005 - SH 29 Widening/4 - Design/Plan Set/8. Traffic/SH29_K_SIG_304.dgn

DW: CK: DW: CK:

CABLE TERMINATION

CONDUCTOR COLOR	CABLE 1 HEAD 19 PHASE 1	CABLE 2 HEADS 17,18 OVL A	CABLE 3 EW1 (PHASE 2 - PED)	CABLE 4 PB1 (PHASE 2 - PED)	(EXIST) CABLE 5 HEAD 20 OVL C	CABLE 6 HEAD 23 PHASE 5	(EXIST) CABLE 7 HEAD 22 OVL D
	7C	5C	5C	2C	4C (EXISTING)	7C	4C (EXISTING)
BLACK	SPARE	Y	DW	PED CALL	Y	SPARE	Y
WHITE	SIGNAL COMMON	SIGNAL COMMON	PED COMMON	APS COMMON	SIGNAL COMMON	SIGNAL COMMON	SIGNAL COMMON
RED	R ARW	R	SPARE	----	R	R ARW	R
GREEN	SPARE	G	SPARE	----	G, G ARW	SPARE	G, G ARW
ORANGE	Y ARW	SPARE	W	----	-	Y ARW	-
BLUE	G ARW	-	----	----	-	G ARW	-
WHITE/BLACK	FY ARW	-	----	----	-	FY ARW	-

CABINET WIRING

INSIDE CABINET	SIGNAL CABLE TY A				ETHERNET
	2C # 12	5C # 14 (PED)	5C # 14 (VEH)	7C # 14 (VEH)	
TOTAL QTY	5	5	5	10	25

POLE WIRING

INSIDE POLES	TYPE	ELEC CONDR	TRAY CABLE	SIGNAL CABLE TY A			ETHERNET
		#8 INS (LUM)	4C # 14	2C # 12	5C # 14	7C # 14	
A	SIGNAL POLE (30' TALL)	60	25		40	20	20
B	(EXIST) DMA SIGNAL POLE (30' TALL)		50				40
C	PEDESTRIAN POLE (10' TALL)			5	10		
F	(EXIST) SIGNAL POLE (30' TALL)		25				20
G	(EXIST) SIGNAL POLE (30' TALL)		25				20
H	(EXIST) SIGNAL POLE (30' TALL)		25			20	
TOTAL QTY (LF)		60	150	5	50	40	100

GROUND WIRING

CONDUIT AND CABLE CHART
WIRE SIZE AND TYPE

RUN #	ACTION	ITEM 618 CONDUIT SIZE AND TYPE		ACTION	ITEM 620 ELECTRICAL CONDUCTORS		ITEM 621 TRAY CABLE	ITEM 684 SIGNAL CABLE (TYPE A)				ITEM 6005 ETHERNET	LENGTH OF RUN	RUN #
		2" PVC SCH 40 TRENCH	3" PVC SCH 40 TRENCH		NO. 8 INSULATED (GROUND)	NO. 8 INSULATED (LUM)	4 CNDR NO. 14 (ILSN)	2 CNDR NO. 12 (APS)	5 CNDR NO. 14 (PED)	5 CNDR NO. 14 (VEH)	7 CNDR NO. 14 (VEH)			
0	E			I		2	6						115	0
1	E			I				1	1	1	2	5	5	1
2	E			I				1	1	1	2	5	80	2
3	E			I			5	1	1	1	1	1	95	3
4	I	1	2	I	3	2	1			1	1	1	10	4
5	I	1		I	1			1	1				25	5
6	E			I			5				1	4	75	6
7	E			I			2				1	2	10	7
8	E			I			3				1	2	60	8
9	E			I			3				1	2	330	9
10	E			I			3				1	2	40	10
11	E			I			3				1	2	90	11
12	E			I			1				1		10	12
13	E			I			2					2	95	13
14	E			I			1					1	10	14
15	E			I			1					1	80	15
16	E			I			1					1	20	16
SUBTOTAL (LF)		35	20		55	250	3140	125	125	110	730	1790	SUBTOTAL (LF)	

ACTION CODES: I - INSTALL; E - EXISTING
NOTES:
1. INSTALL NEW CABLE IN EXISTING CONDUIT UNLESS SHOWN OTHERWISE.
2. EXISTING WIRING AND CONDUITS NOT SHOWN FOR CLARITY.
**FURNISH AND INSTALL DETECTION CABLE PER MANUFACTURER RECOMMENDATIONS.

ELECTRICAL SERVICE

ELECTRICAL SERVICE DESCRIPTION	SERVICE CONDUIT SIZE*	SERVICE CONDUCTORS NO./SIZE	SAFETY SWITCH AMPS	MAIN CKT. BKR. POLE/AMPS	LIGHTING CONTACTOR AMPS	PANELBD/ LOADCENTER AMP RATING	BRANCH CIRCUIT ID	BRANCH CKT. BKR. POLE/AMPS	BRANCH CIRCUIT AMPS	KVA LOAD
ELC SRV TY D 120/240 100 (NS)AL(E)PS(U)	(EXISTING TO REMAIN)						ILSN	2P/15	6	<7.2

PUSH BUTTON DETAILS

APS MESSAGE INFORMATION			
APS UNIT NO.	ACKNOWLEDGEMENT DEFAULT "WAIT"	EXTENDED PRESS MESSAGE "WAIT TO CROSS (STREET NAME) AT (CROSS STREET NAME)"	WALK PRESS MESSAGE "(STREET NAME); WALK SIGN IS ON TO CROSS (STREET NAME)"
PB1	YES	35 AT UNIVERSITY	35
PB2	YES	UNIVERSITY AT 35	UNIVERSITY
PB3	YES	UNIVERSITY AT 35	UNIVERSITY
PB4	YES	35 AT UNIVERSITY	35
PB5	YES	35 AT UNIVERSITY	35
PB6	YES	35 AT UNIVERSITY	35
PB7	YES	35 AT UNIVERSITY	35
PB8	YES	35 AT UNIVERSITY	35
PB9	YES	UNIVERSITY AT 35	UNIVERSITY
PB10	YES	UNIVERSITY AT 35	UNIVERSITY
PB11	YES	35 AT UNIVERSITY	35
PB12	YES	35 AT UNIVERSITY	35

ARM WIRING

INSIDE ARMS	SIGNAL CABLE TY A		ETHERNET
	5C # 14	7C # 14	
POLE A - 44' ARM			
HEADS 17 & 18	55		
HEAD 19		45	
DETECTOR 1 (COMBO RADAR/VIVDS)			30
(EXIST) POLE B - 44' ARM			
DETECTOR 2 (COMBO RADAR/VIVDS)			25
DETECTOR 3 (COMBO RADAR/VIVDS)			25
(EXIST) POLE F - 28' ARM			
DETECTOR 4 (COMBO RADAR/VIVDS)			25
(EXIST) POLE G - 28' ARM			
DETECTOR 5 (COMBO RADAR/VIVDS)			30
(EXIST) POLE H - 40' ARM			
HEAD 23		40	
TOTAL QTY (LF)	55	85	135

PUSH BUTTON DETAILS

PEDESTRIAN SIGN DETAIL			
POLE		SIGN	SIZE
A	PB2	R10-3eL	9" x 15"
B	PB5	R10-3eR	9" x 15"
C	PB1	R10-3eR	9" x 15"
D	PB3	R10-3eL	9" x 15"
	PB4	R10-3eL	9" x 15"
E	PB6	R10-3eL	9" x 15"
G	PB8	R10-3eL	9" x 15"
I	PB7	R10-3eR	9" x 15"
J	PB9	R10-3eR	9" x 15"
K	PB10	R10-3eL	9" x 15"
L	PB11	R10-3eR	9" x 15"
M	PB12	R10-3eL	9" x 15"

NOTES:

FURNISH THE MATERIALS LISTED BELOW (OR APPROVED EQUAL) FOR COMPATIBILITY WITH CITY OF GEORGETOWN TRAFFIC MANAGEMENT SYSTEM. PROVIDE SHOP DRAWINGS FOR APPROVAL BY THE ENGINEER PRIOR TO ORDERING EQUIPMENT.

1. ITERIS MYERS BBU SYSTEM WITH GENERATOR INPUT OPTION AND OPERATION
2. POLARA IN2 INAVIGATOR 2-WIRE PUSH BUTTON SYSTEM
3. POLARA ICCU-S INTELLIGENT CENTRAL CONTROL UNIT
4. ITERIS VANTAGE NEXT CAMERA AND DETECTION SYSTEM
5. ITERIS VANTAGE WITH VANTAGE VECTOR DETECTION

Matthew Gaal
9/24/2025

STATE OF TEXAS
MATTHEW A. GAAL
140753
LICENSED
PROFESSIONAL ENGINEER

GEORGETOWN TEXAS
more than welcome

Kimley»Horn F-928

Texas Department of Transportation

SH 29

I-35 SB
TRAFFIC SIGNAL
ELECTRICAL DATA

SHEET 1 OF 1

CONT	SECT	JOB	HIGHWAY
0337	01	053	SH 29
DIST	COUNTY		SHEET NO.
AUS	WILLIAMSON		167

CK:
DW:
CK:
DW:

DATE: 9/24/2025 6:31:16 PM
FILE: pw://kh-pw.bentley.com:kh-pw-01/Documents/01 Active Projects/TX-GEO-069284005 - SH 29 Widening/4 - Design/Plan Set/8. Traffic/SH29_K_SIG_403.dgn

DETECTOR	APPROACH	TYPE	MOUNTING LOCATION
1	WESTBOUND THRU (OVL A-P1)	PRESENCE	POLE A
	WESTBOUND LEFT (PHASE 1-P1	PRESENCE	
2	SOUTHBOUND THRU (OVL C-P1)	PRESENCE	POLE B
	SOUTHBOUND THRU (OVL C-A1)	ADVANCE	
3	EASTBOUND THRU (PHASE 2-P1)	PRESENCE	
	EASTBOUND THRU (PHASE 2-A1)	ADVANCE	

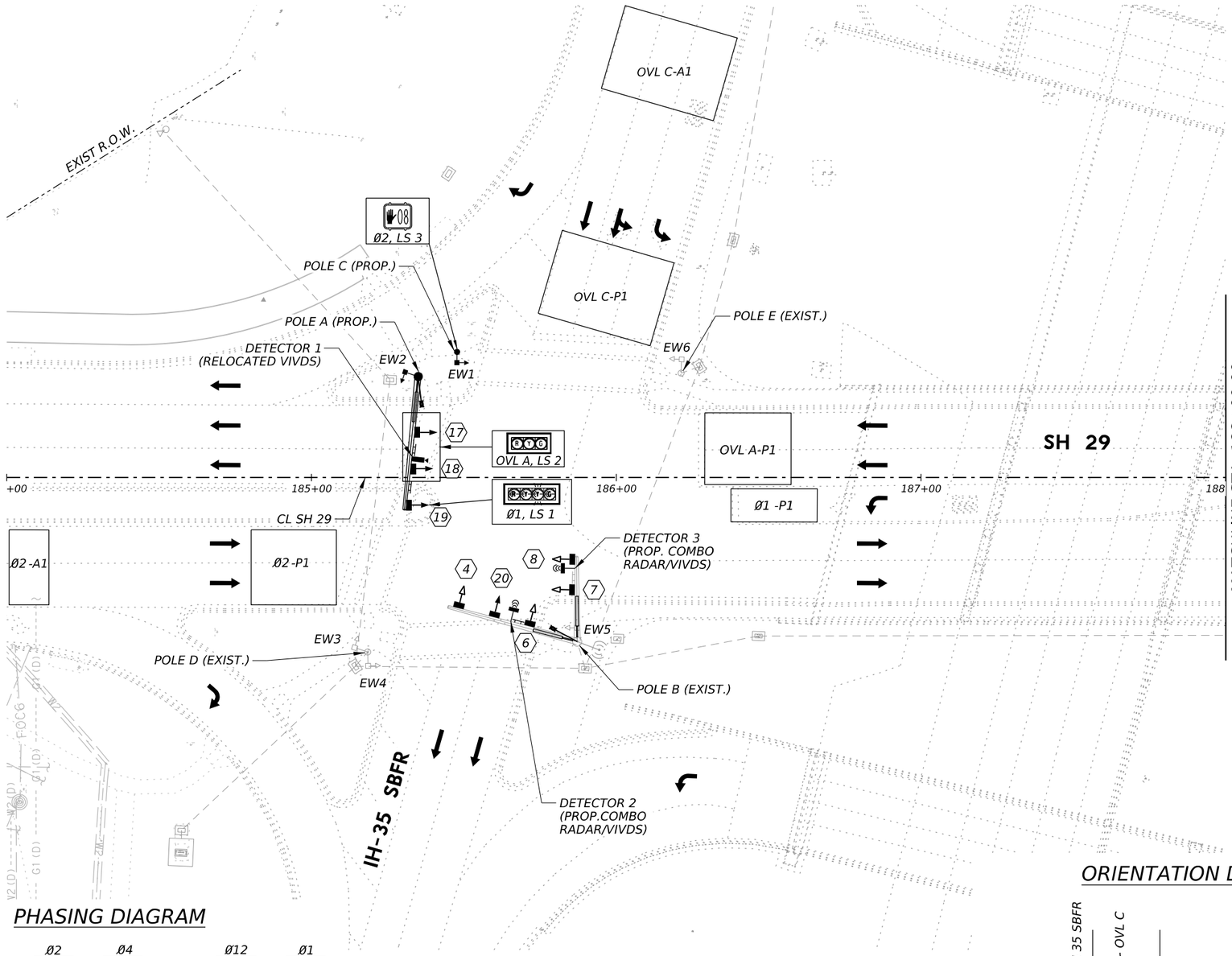

PROPOSED LEGEND

- TRAFFIC SIGNAL POLE
- LUMINAIRE
- HORIZONTAL SIGNAL HEAD
- MODIFIED/RELOCATED HORIZONTAL SIGNAL HEAD
- VERTICAL SIGNAL HEAD
- INTERNALLY LIGHTED STREET NAME SIGN
- SIGN
- PEDESTAL POLE W/ PEDESTRIAN SIGNAL HEAD
- PEDESTAL POLE W/ SPREAD FOOTING FOUNDATION
- VIVDS CAMERA
- RADAR/VIVDS COMBO DETECTION DEVICE
- WIRELESS RADIO
- GROUND BOX (TYPE D W/APRON)
- CONDUIT (TRENCH)
- CONDUIT (BORE)
- CONTROLLER CABINET
- DIRECTION OF TRAFFIC
- RIGHT OF WAY (R.O.W.)
- ELECTRIC SERVICE PEDESTAL

0' 20' 40'

PHASING DIAGRAM

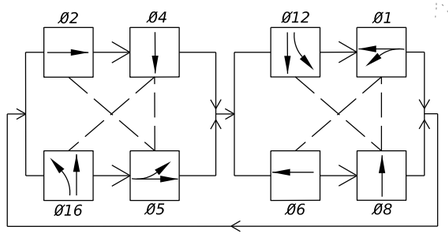

NOTES

1. CONTRACTOR SHALL COORDINATE WITH CITY OF GEORGETOWN FOR EXACT PLACEMENT OF THE DETECTION ZONES.
2. CONTRACTOR TO CONFIGURE THE EXISTING CONTROLLER TO OPERATE FLASHING YELLOW ARROW FOR PHASE 1 AND 5.

ORIENTATION DIAGRAM

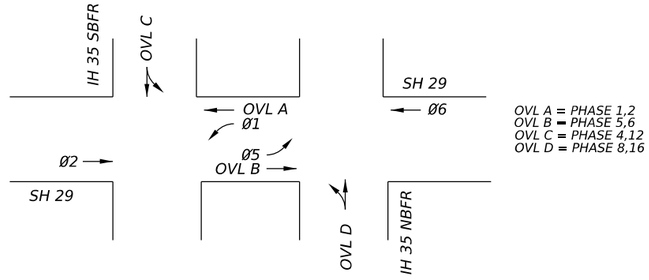

OVL A = PHASE 1,2
OVL B = PHASE 5,6
OVL C = PHASE 4,12
OVL D = PHASE 8,16

Matthew Gaal
9/24/2025

STATE OF TEXAS
MATTHEW A. GAAL
140753
LICENSED
PROFESSIONAL ENGINEER

GEORGETOWN TEXAS
more than welcome

Kimley»Horn F-928

Texas Department of Transportation

SH 29

I-35 TRAFFIC SIGNAL PHASING, DETECTION & LOAD SWITCH LAYOUT

SHEET 1 OF 2

CONT	SECT	JOB	HIGHWAY
0337	01	053	SH 29
DIST	COUNTY		SHEET NO.
AUS	WILLIAMSON		168

DATE: 9/24/2025 6:31:36 PM
FILE: pw://kh-pw.bentley.com:kh-pw-01/Documents/01 Active Projects/TX-GEO-069284005 - SH 29 Widening/4 - Design/Plan Set/8. Traffic/SH29_K_SIG_503.dgn

DW: CK: DW: CK:

DETECTOR	APPROACH	TYPE	MOUNTING LOCATION
4	WESTBOUND THRU (PHASE 6-P1)	PRESENCE	POLE F
	WESTBOUND THRU (PHASE 6-A1)	ADVANCE	
5	NORTHBOUND THRU (OVL D-P1)	PRESENCE	POLE G
	NORTHBOUND THRU (OVL D-A1)	ADVANCE	

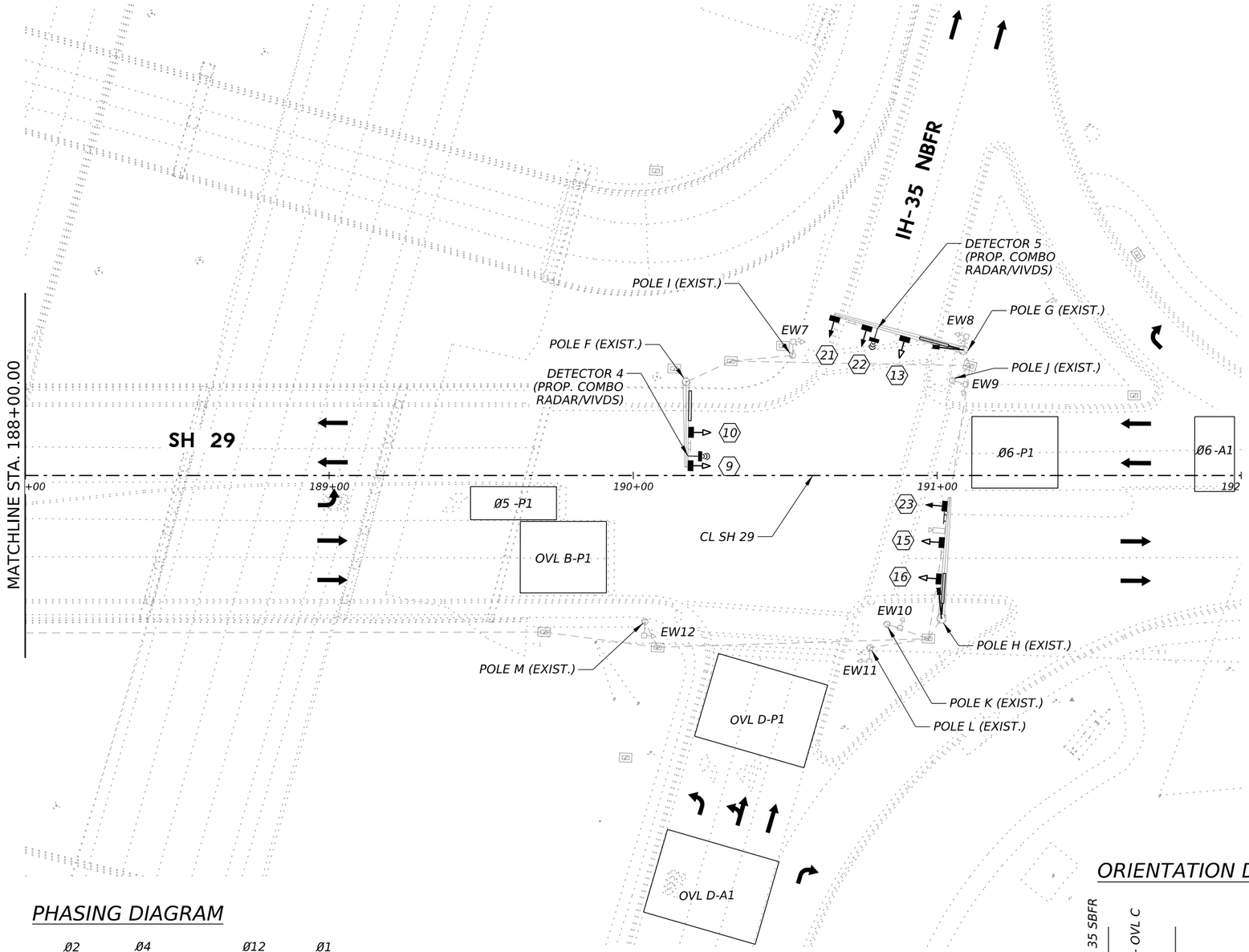

PROPOSED LEGEND

- TRAFFIC SIGNAL POLE
- LUMINAIRE
- HORIZONTAL SIGNAL HEAD
- MODIFIED/RELOCATED HORIZONTAL SIGNAL HEAD
- VERTICAL SIGNAL HEAD
- INTERNALLY LIGHTED STREET NAME SIGN
- SIGN
- PEDESTAL POLE W/ PEDESTRIAN SIGNAL HEAD
- PEDESTAL POLE W/ SPREAD FOOTING FOUNDATION
- VIVDS CAMERA
- RADAR/VIVDS COMBO DETECTION DEVICE
- WIRELESS RADIO
- GROUND BOX (TYPE D W/APRON)
- CONDUIT (TRENCH)
- CONDUIT (BORE)
- CONTROLLER CABINET
- DIRECTION OF TRAFFIC
- RIGHT OF WAY (R.O.W.)
- ELECTRIC SERVICE PEDESTAL

N

0' 20' 40'

PHASING DIAGRAM

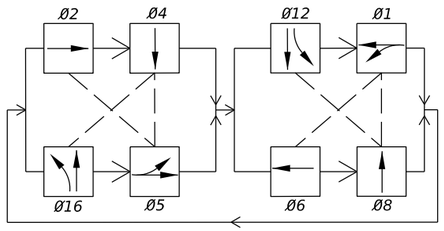

NOTES

1. CONTRACTOR SHALL COORDINATE WITH CITY OF GEORGETOWN FOR EXACT PLACEMENT OF THE DETECTION ZONES.
2. CONTRACTOR TO CONFIGURE THE EXISTING CONTROLLER TO OPERATE FLASHING YELLOW ARROW FOR PHASE 1 AND 5.

ORIENTATION DIAGRAM

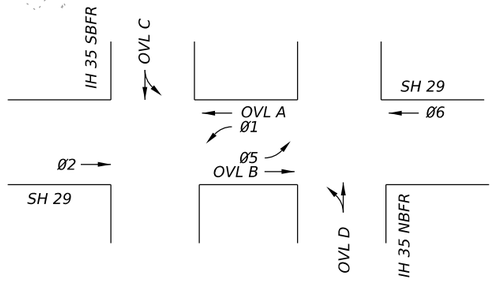

OVL A = PHASE 1,2
OVL B = PHASE 5,6
OVL C = PHASE 4,12
OVL D = PHASE 8,16

Matthew Gaal
9/24/2025
STATE OF TEXAS
MATTHEW A GAAL
140753
LICENSED
PROFESSIONAL ENGINEER

GEORGETOWN TEXAS
more than welcome

Kimley»Horn F-928

Texas Department of Transportation

SH 29

I-35 TRAFFIC SIGNAL PHASING, DETECTION & LOAD SWITCH LAYOUT

SHEET 2 OF 2

CONT	SECT	JOB	HIGHWAY
0337	01	053	SH 29
DIST	COUNTY		SHEET NO.
AUS	WILLIAMSON		169

DATE: 9/24/2025 6:31:52 PM
FILE: pw://kh-pw.bentley.com:kh-pw-01/Documents/01 Active Projects/TX-GEO-069284005 - SH 29 Widening/4 - Design/PlanSet/8. Traffic/SH29_K_SIG_504.dgn

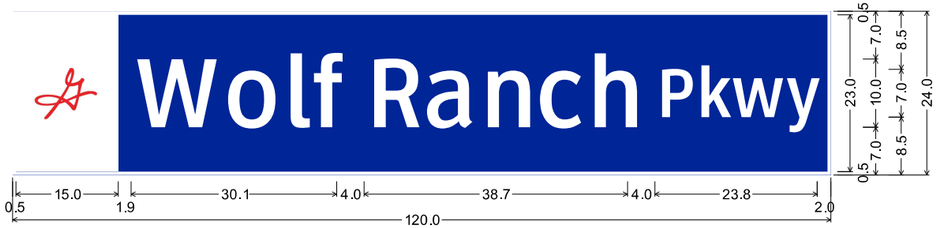

1.5" Radius, 0.5" Border, White on Blue;
"Wolf", ClearviewHwy-3-W 70% spacing; "Ranch", ClearviewHwy-3-W 70% spacing;
"Pkwy", ClearviewHwy-3-W 70% spacing;

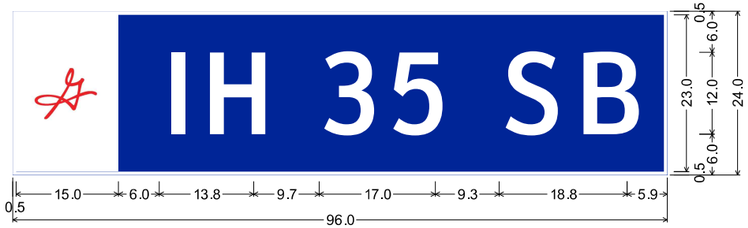

1.5" Radius, 0.5" Border, White on Blue;
"IH 35 SB", ClearviewHwy-3-W;

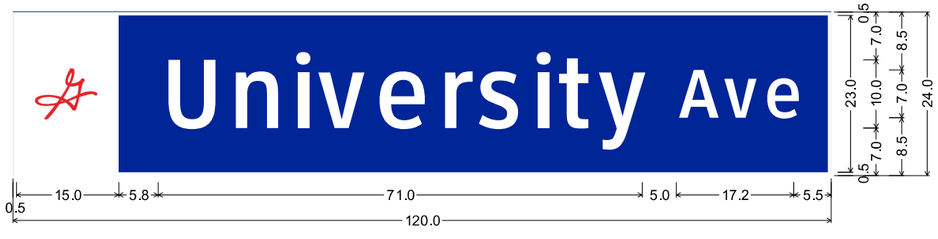

1.5" Radius, 0.5" Border, White on Blue;
"University", ClearviewHwy-3-W; "Ave", ClearviewHwy-3-W;

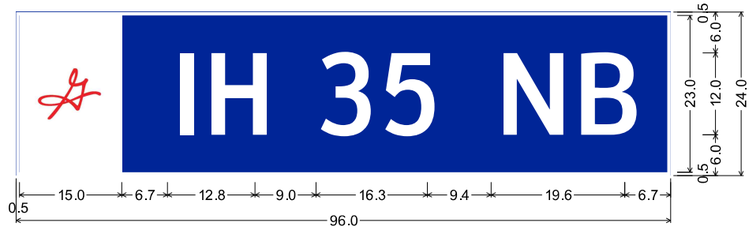

1.5" Radius, 0.5" Border, White on Blue;
"IH 35 NB", ClearviewHwy-3-W 71% spacing;

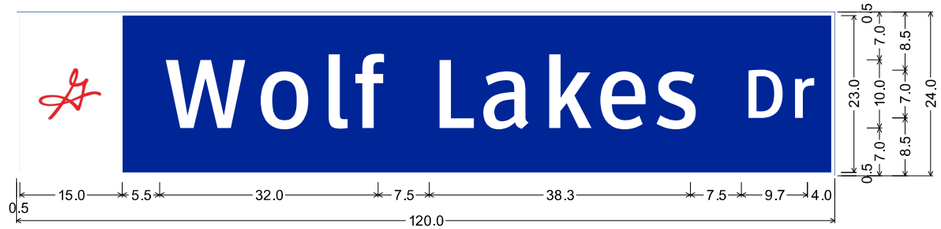

1.5" Radius, 0.5" Border, White on Blue;
"Wolf", ClearviewHwy-3-W; "Lakes", ClearviewHwy-3-W; "Dr", ClearviewHwy-3-W;

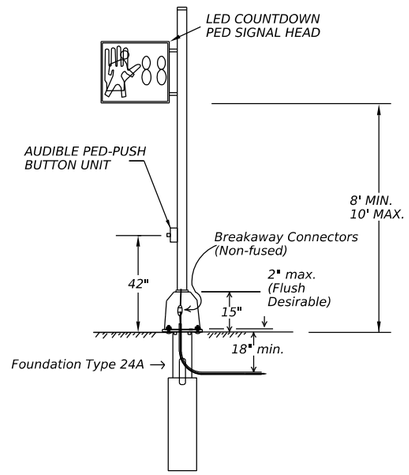

PEDESTRIAN POLE DETAILS

Matthew Gaal
9/24/2025

STATE OF TEXAS
MATTHEW A. GAAL
140753
LICENSED
PROFESSIONAL ENGINEER

GEORGETOWN
TEXAS
more than welcome

Kimley»Horn
F-928

Texas Department of Transportation

SH 29

MISCELLANEOUS
SIGNAL DETAILS

SHEET 1 OF 1

CONT	SECT	JOB	HIGHWAY
0337	01	053	SH 29
DIST	COUNTY		SHEET NO.
AUS	WILLIAMSON		170

DATE: 9/24/2025 6:32:07 PM
FILE: pw://kh-pw.bentley.com:kh-pw-01/Documents/01 Active Projects/TX-GEO-069284005 - SH 29 Widening/4 - Design/Plan Set/8. Traffic/SH29_K_SIG_SIGNAL DETAILS.dgn

DW: CK: DW: CK:

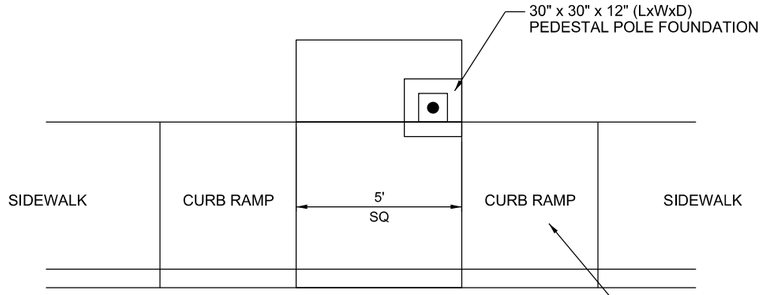

30"X30" FOUNDATION SIDEWALK DETAIL
(NOT TO SCALE)

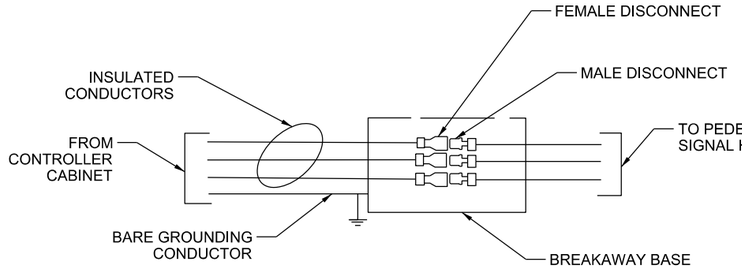

BREAKAWAY IN-LINE FUSEHOLDERS
(NOT TO SCALE)

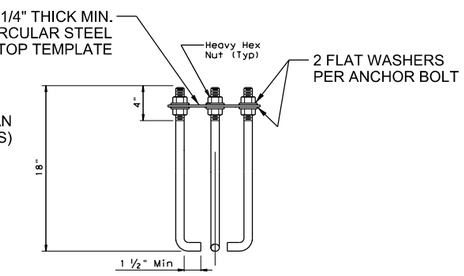

HOOKED ANCHOR
(NOT TO SCALE)

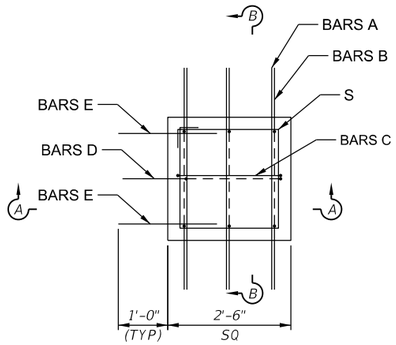

PLAN - TOP

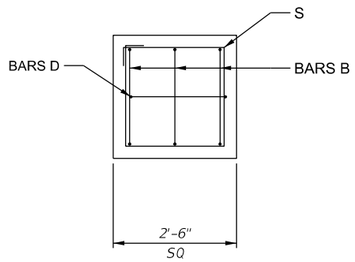

PLAN - BOTTOM

PEDESTAL POLE FOUNDATION PLAN VIEW (NOT TO SCALE)

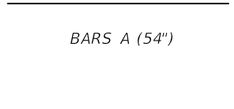

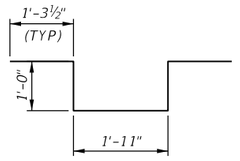

BARS B

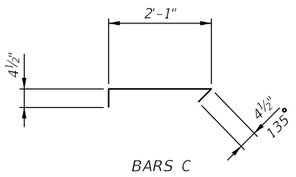

BARS C

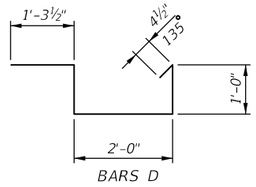

BARS D

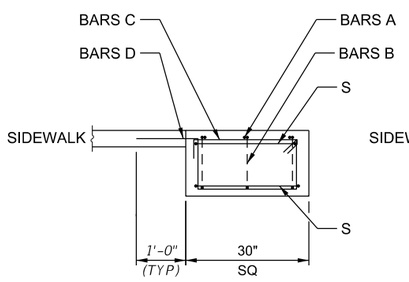

SECTION A-A

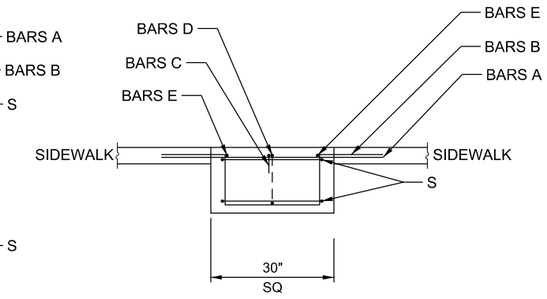

SECTION B-B

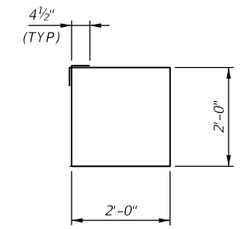

S - STIRRUP

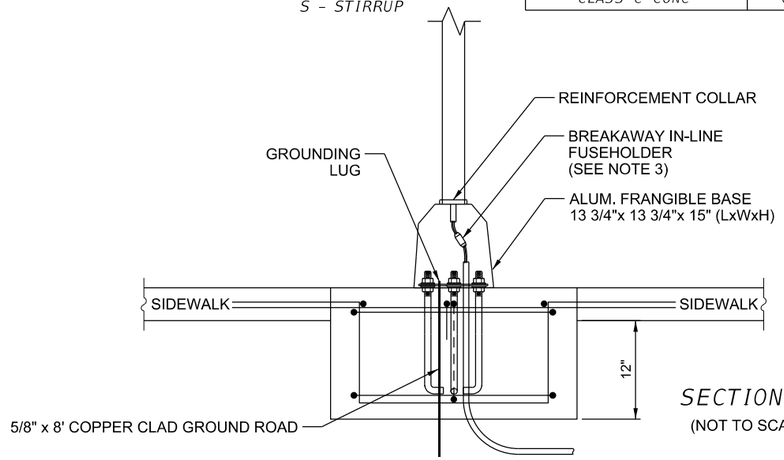

SECTION B-B
(NOT TO SCALE)

NOTES:
1. THE PEDESTAL POLE ASSEMBLY DEPICTED ON THIS SHEET IS DESIGNED FOR SIGNAL HEADS WHERE ELECTRICAL POWER IS NEEDED WITH A BREAKAWAY POLE.
2. POLE SHAFT SHALL BE ONE PIECE, SCHEDULE 40 ALUMINUM PIPE, ASTM B429 OR B221 (ALLOY 6061-T6 ONLY). ALUMINUM CONDUIT WILL NOT DEVELOP THE NECESSARY STRENGTH AND WILL NOT BE ALLOWED.
3. ALL ELECTRICAL CONNECTORS FOR BREAKAWAY POLES SHALL BE WATER TIGHT BREAKAWAY FUSEHOLDERS (BUCHANNAN 65U, BUSSMAN HEBW, LETTELFUSE LEB, HMC FLOOD-SEAL, FERRAZ-SHAWMUT, OR EQUAL). FUSES SHALL BE 10 AMP TIME DELAY.
4. CONDUIT IN FOUNDATION AND WITHIN 6 INCHES OF FOUNDATION IS SUBSIDIARY TO THE ITEM, 'PEDESTAL POLE ASSEMBLY'.
5. PER MANUFACTURER'S RECOMMENDATIONS, ENGAGE ALL THREADS ON THE PEDESTAL POLE BASE PIPE UNLESS THE PIPE IS FULLY SEATED INTO BASE.
6. PROVIDE TXDOT CLASS 'C' CONCRETE, f'c=3,600PSI, ASTM A615 GRADE 60 STEEL REINFORCEMENT.
7. ESTIMATED QUANTITES ARE FOR CONTRACTOR'S REFERENCE ONLY.

ESTIMATED QUANTITIES

BAR	NO.	SIZE	LENGTH	WEIGHT
A	3	#4	4'-6"	9
B	3	#4	6'-6"	13
C	1	#4	2'-10"	2
D	1	#4	5'-8"	4
E	2	#4	2'-0"	3
S	2	#4	8'-9"	12
REINF. STEEL			LB	43
CLASS 'C' CONC			CY	0.23

9/24/2025

STATE OF TEXAS
JIANYING GUO
104055
LICENSED
PROFESSIONAL ENGINEER

GEORGETOWN
TEXAS
more than welcome

Kimley»Horn
F-928

Texas Department of Transportation

SH 29

SPREAD FOOTING
PEDESTRIAN POLE DETAIL

SHEET 1 OF 1

CONT	SECT	JOB	HIGHWAY
0337	01	053	SH 29
DIST	COUNTY		SHEET NO.
AUS	WILLIAMSON		171

DATE: 9/24/2025 6:32:25 PM
FILE: pw://kh-pw.bentley.com:kh-pw-01/Documents/01 Active Projects/TX-GEO-069284005 - SH 29 Widening/4 - Design/Plan Set/8. Traffic/SH29_K_SIG_STANDARD.dgn

DISCLAIMER:
The use of this standard is governed by the "Texas Engineering Practice Act". No warranty of any kind is made by TxDOT for any purpose whatsoever. TxDOT assumes no responsibility for the conversion of this standard to other formats or for incorrect results or damages resulting from its use.

DATE: 12/18/2025 2:35:44 PM
FILE: pw://kh-pw.bentley.com:kh-pw-01/Documents/01 Active Projects/TX-GEO-0692B40/05 Design/Plans Set/Submittal Package/sums16.dgn

SUMMARY OF SMALL SIGNS

SM RD SGN ASSM TY XXXXX (X) XX (X-XXXX)

PLAN SHEET NO.	SIGN NO.	SIGN NOMENCLATURE	SIGN	DIMENSIONS	FLAT ALUMINUM (TYPE A)	EXAL ALUMINUM (TYPE G)	POST TYPE FRP = Fiberglass TWT = Thin-Wall 10BWG = 10 BWG S80 = Sch 80	POSTS 1 or 2	ANCHOR TYPE UA=Universal Conc UB=Universal Bolt SA=Slipbase-Conc SB=Slipbase-Bolt WS=Wedge Steel WP=Wedge Plastic	MOUNTING DESIGNATION PREFABRICATED P = "Plain" T = "T" U = "U"	1EXT or 2EXT = # of Ext BM = Extruded Wind Beam WC = 1.12 #/ft Wing Channel EXAL= Extruded Alum Sign Panels	BRIDGE MOUNT CLEARANCE SIGNS (See Note 2) TY = TYPE TY N TY S
1	5	R3-5L	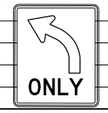	30 x 36			10BWG	1	SA	P		
1	6	R3-5L	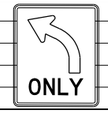	30 x 36			10BWG	1	SA	P		
1	8	R6-1R	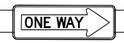	36 x 30			10BWG	1	SA	T		
1	12	R3-8LL	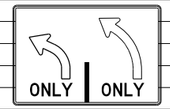	36 x 30			10BWG	1	SA	P		
1	13	R3-8LL	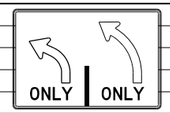	36 x 30			10BWG	1	SA	P		
1	15	R6-1R	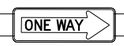	54 x 18			10BWG	1	SA	T		
1	16	R3-5R	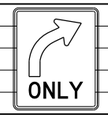	30 x 36			10BWG	1	SA	P		
1	18	R6-1R	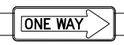	54 x 18			10BWG	1	SA	T		
1	20	R3-5R	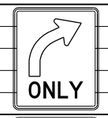	30 x 36			10BWG	1	SA	P		
2	22	R3-5R	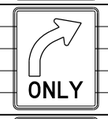	36 x 30			10BWG	1	SA	P		
2	23	R3-5R	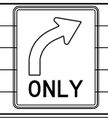	36 x 30			10BWG	1	SA	P		
2	24	R3-8LL	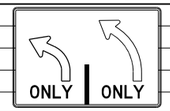	36 x 30			10BWG	1	SA	P		

ALUMINUM SIGN BLANKS THICKNESS	
Square Feet	Minimum Thickness
Less than 7.5	0.080"
7.5 to 15	0.100"
Greater than 15	0.125"

The Standard Highway Sign Designs for Texas (SHSD) can be found at the following website.

http://www.txdot.gov/

NOTE:

1. Sign supports shall be located as shown on the plans, except that the Engineer may shift the sign supports, within design guidelines, where necessary to secure a more desirable location or to avoid conflict with utilities. Unless otherwise shown on the plans, the Contractor shall stake and the Engineer will verify all sign support locations.
2. For installation of bridge mount clearance signs, see Bridge Mounted Clearance Sign Assembly (BMCS)Standard Sheet.
3. For Sign Support Descriptive Codes, see Sign Mounting Details Small Roadside Signs General Notes & Details SMD(GEN).

Texas Department of Transportation

Traffic Operations Division Standard

SUMMARY OF SMALL SIGNS

SOSS

FILE: sums16.dgn	DN: TxDOT	CK: TxDOT	DW: TxDOT	CK: TxDOT
© TxDOT May 1987	CONT	SECT	JOB	HIGHWAY
REVISIONS	0337	01	053	SH 29
4-16	DIST	COUNTY		SHEET NO.
8-16	AUS	WILLIAMSON		172

18

SUMMARY OF SMALL SIGNS

SM RD SGN ASSM TY XXXXX (X) XX (X-XXXX)

PLAN SHEET NO.	SIGN NO.	SIGN NOMENCLATURE	SIGN	DIMENSIONS	FLAT ALUMINUM (TYPE A)	EXAL ALUMINUM (TYPE G)	POST TYPE FRP = Fiberglass TWT = Thin-Wall 10BWG = 10 BWG S80 = Sch 80	POSTS 1 or 2	ANCHOR TYPE UA=Universal Conc UB=Universal Bolt SA=Slipbase-Conc SB=Slipbase-Bolt WS=Wedge Steel WP=Wedge Plastic	MOUNTING DESIGNATION PREFABRICATED P = "Plain" T = "T" U = "U"	1EXT or 2EXT = # of Ext BM = Extruded Wind Beam WC = 1.12 #/ft Wing Channel EXAL= Extruded Alum Sign Panels	BRIDGE MOUNT CLEARANCE SIGNS (See Note 2) TY = TYPE TY N TY S
2	25	R3-7R		36 x 30			10BWG	1	SA	P		
2	26	R1-1	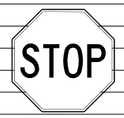	36 x 30			10BWG	1	SA	P		
2	27	R4-8	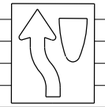	36 x 30			10BWG	1	SA	P		
2	29	R3-8LL	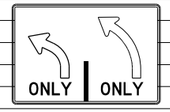	36 x 30			10BWG	1	SA	P		
2	30	R6-1R		36 x 30			10BWG	1	SA	T		
2	31	R2-1		30 x 36			10BWG	1	SA	P		
2	32	R3-8LL	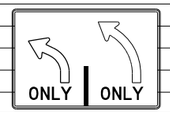	36 x 30			10BWG	1	SA	P		
2	33	R3-8LL	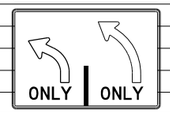	36 x 30			10BWG	1	SA	P		
2	35	R3-8LL	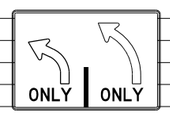	36 x 30			10BWG	1	SA	P		
2	36	R2-1		36 x 30			10BWG	1	SA	P		
2	37	R6-1R	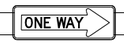	54 x 18			10BWG	1	SA	T		

ALUMINUM SIGN BLANKS THICKNESS	
Square Feet	Minimum Thickness
Less than 7.5	0.080"
7.5 to 15	0.100"
Greater than 15	0.125"

The Standard Highway Sign Designs for Texas (SHSD) can be found at the following website.

http://www.txdot.gov/

NOTE:

1. Sign supports shall be located as shown on the plans, except that the Engineer may shift the sign supports, within design guidelines, where necessary to secure a more desirable location or to avoid conflict with utilities. Unless otherwise shown on the plans, the Contractor shall stake and the Engineer will verify all sign support locations.
2. For installation of bridge mount clearance signs, see Bridge Mounted Clearance Sign Assembly (BMCS)Standard Sheet.
3. For Sign Support Descriptive Codes, see Sign Mounting Details Small Roadside Signs General Notes & Details SMD(GEN).

Texas Department of Transportation

Traffic Operations Division Standard

SUMMARY OF SMALL SIGNS

SOSS

FILE: sums16.dgn	DN: TxDOT	CK: TxDOT	DW: TxDOT	CK: TxDOT
© TxDOT May 1987	CONT	SECT	JOB	HIGHWAY
REVISIONS	0337	01	053	SH 29
4-16 8-16	DIST	COUNTY		SHEET NO.
	AUS	WILLIAMSON		173

18

DISCLAIMER:
The use of this standard is governed by the "Texas Engineering Practice Act". No warranty of any kind is made by TxDOT for any purpose whatsoever. TxDOT assumes no responsibility for the conversion of this standard to other formats or for incorrect results or damages resulting from its use.
DATE: 12/18/2025 2:36:06 PM
FILE: pw://kh-pw.bentley.com:kh-pw-01/Documents/01 Active Projects/TX-GEO-068928/05 Roadway/Traffic Design/Sheets/sums16.dgn

SUMMARY OF SMALL SIGNS

PLAN SHEET NO.	SIGN NO.	SIGN NOMENCLATURE	SIGN	DIMENSIONS	FLAT ALUMINUM (TYPE A)	EXAL ALUMINUM (TYPE G)	SM RD SGN ASSM TY XXXXX (X) XX (X-XXXX) POST TYPE	POSTS	ANCHOR TYPE	MOUNTING DESIGNATION PREFABRICATED	MOUNTING DESIGNATION 1EXT or 2EXT = # of Ext BM = Extruded Wind Beam WC = 1.12 #/ft Wing Channel EXAL= Extruded Alum Sign Panels	BRIDGE MOUNT CLEARANCE SIGNS (See Note 2) TY = TYPE
							FRP = Fiberglass TWT = Thin-Wall 10BWG = 10 BWG S80 = Sch 80	1 or 2	UA=Universal Conc UB=Universal Bolt SA=Slipbase-Conc SB=Slipbase-Bolt WS=Wedge Steel WP=Wedge Plastic	P = "Plain" T = "T" U = "U"		TY N TY S
3	38	W2-1aTL		48 x 48			10BWG	1	SA	T		
3	40	R3-8LL	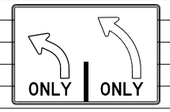	36 x 30			10BWG	1	SA	P		
3	41	R3-5R		30 x 36			10BWG	1	SA	P		
3	43	D2-2		??? x 30			10BWG	1	SA	U		
3	44	R3-8LL	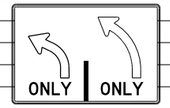	36 x 30			10BWG	1	SA	P		
		M2-1B		21 x 15								
3	46						10BWG	1	SA	P		
		M1-1T (2DGT)		24 x 24								
3	47	R3-5R		30 x 36			10BWG	1	SA	P		
3	49	R3-5R		30 x 36			10BWG	1	SA	P		
3	50	R3-8LL	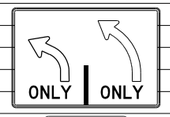	36 x 30			10BWG	1	SA	P		
4	51	R3-5R		30 x 36			10BWG	1	SA	P		
4	52	R2-1		30 x 36			10BWG	1	SA	P		
4	54	R2-1		30 x 36			10BWG	1	SA	P		

ALUMINUM SIGN BLANKS THICKNESS	
Square Feet	Minimum Thickness
Less than 7.5	0.080"
7.5 to 15	0.100"
Greater than 15	0.125"

The Standard Highway Sign Designs for Texas (SHSD) can be found at the following website.

http://www.txdot.gov/

NOTE:

1. Sign supports shall be located as shown on the plans, except that the Engineer may shift the sign supports, within design guidelines, where necessary to secure a more desirable location or to avoid conflict with utilities. Unless otherwise shown on the plans, the Contractor shall stake and the Engineer will verify all sign support locations.
2. For installation of bridge mount clearance signs, see Bridge Mounted Clearance Sign Assembly (BMCS)Standard Sheet.
3. For Sign Support Descriptive Codes, see Sign Mounting Details Small Roadside Signs General Notes & Details SMD(GEN).

Texas Department of Transportation

Traffic Operations Division Standard

SUMMARY OF SMALL SIGNS

SOSS

FILE: sums16.dgn	DN: TxDOT	CK: TxDOT	DW: TxDOT	CK: TxDOT
© TxDOT May 1987	CONT	SECT	JOB	HIGHWAY
REVISIONS	0337	01	053	SH 29
4-16 8-16	DIST	COUNTY		SHEET NO.
	AUS	WILLIAMSON		174

18

DISCLAIMER:
The use of this standard is governed by the "Texas Engineering Practice Act". No warranty of any kind is made by TxDOT for any purpose whatsoever. TxDOT assumes no responsibility for the conversion of this standard to other formats or for incorrect results or damages resulting from its use.
DATE: 12/18/2025 2:36:26 PM
FILE: pw://kh-pw.bentley.com:kh-pw-01/Documents/01 Active Projects/TX-GEO-0692840095 Withering/Parts Design/Prelim Set 7/sums16.dgn

SUMMARY OF SMALL SIGNS

SM RD SGN ASSM TY XXXXX (X) XX (X-XXXX)

PLAN SHEET NO.	SIGN NO.	SIGN NOMENCLATURE	SIGN	DIMENSIONS	FLAT ALUMINUM (TYPE A)	EXAL ALUMINUM (TYPE G)	POST TYPE FRP = Fiberglass TWT = Thin-Wall 10BWG = 10 BWG S80 = Sch 80	POSTS 1 or 2	ANCHOR TYPE UA=Universal Conc UB=Universal Bolt SA=Slipbase-Conc SB=Slipbase-Bolt WS=Wedge Steel WP=Wedge Plastic	MOUNTING DESIGNATION PREFABRICATED P = "Plain" T = "T" U = "U"	MOUNTING DESIGNATION 1EXT or 2EXT = # of Ext BM = Extruded Wind Beam WC = 1.12 #/ft Wing Channel EXAL= Extruded Alum Sign Panels	BRIDGE MOUNT CLEARANCE SIGNS (See Note 2) TY = TYPE TY N TY S
4	55	R3-8LL	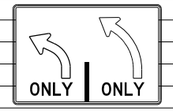	36 x 30			10BWG	1	SA	P		
4	57	R3-5R		30 x 36			10BWG	1	SA	T		
4	60	R10-15a	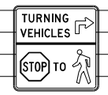	30 x 30			10BWG	1	SA	P		
4	61	D1-2		??? x 30			10BWG	1	SA	U		
1	3-A	R3-5R	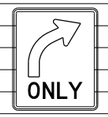	30 x 36			10BWG	1	SA	P		
1	12-A	R3-5R	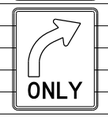	30 x 36			10BWG	1	SA	P		

ALUMINUM SIGN BLANKS THICKNESS	
Square Feet	Minimum Thickness
Less than 7.5	0.080"
7.5 to 15	0.100"
Greater than 15	0.125"

The Standard Highway Sign Designs for Texas (SHSD) can be found at the following website.

http://www.txdot.gov/

NOTE:

1. Sign supports shall be located as shown on the plans, except that the Engineer may shift the sign supports, within design guidelines, where necessary to secure a more desirable location or to avoid conflict with utilities. Unless otherwise shown on the plans, the Contractor shall stake and the Engineer will verify all sign support locations.
2. For installation of bridge mount clearance signs, see Bridge Mounted Clearance Sign Assembly (BMCS)Standard Sheet.
3. For Sign Support Descriptive Codes, see Sign Mounting Details Small Roadside Signs General Notes & Details SMD(GEN).

Texas Department of Transportation

Traffic Operations Division Standard

SUMMARY OF SMALL SIGNS

SOSS

FILE: sums16.dgn	DN: TxDOT	CK: TxDOT	DW: TxDOT	CK: TxDOT
© TxDOT May 1987	CONT	SECT	JOB	HIGHWAY
REVISIONS	0337	01	053	SH 29
4-16 8-16	DIST		COUNTY	SHEET NO.
	AUS		WILLIAMSON	175

18

DISCLAIMER:
The use of this standard is governed by the "Texas Engineering Practice Act". No warranty of any kind is made by TxDOT for any purpose whatsoever. TxDOT assumes no responsibility for the conversion of this standard to other formats or for incorrect results or damages resulting from its use.

DATE: 1/5/2026 11:37:16 AM
FILE: pw://kh-pw.bentley.com:kh-pw-01/Documents/01 Active Projects/TX-GEO-069284005 Sheet 29 Widening/Plans Design/Project Set/Sheet Files/Sums16.dgn

DISCLAIMER:
The use of this standard is governed by the "Texas Engineering Practice Act". No warranty of any kind is made by TxDOT for any purpose whatsoever. TxDOT assumes no responsibility for the conversion of this standard to other formats or for incorrect results or damages resulting from its use.

DATE:
FILE:

SUMMARY OF SMALL SIGNS

SM RD SGN ASSM TY XXXXX (X) XX (X-XXXX)

PLAN SHEET NO.	SIGN NO.	SIGN NOMENCLATURE	SIGN	DIMENSIONS	FLAT ALUMINUM (TYPE A)	EXAL ALUMINUM (TYPE G)	POST TYPE	POSTS	ANCHOR TYPE	MOUNTING DESIGNATION: PREFABRICATED	MOUNTING DESIGNATION: 1EXT or 2EXT = # of Ext; BM = Extruded Wind Beam; WC = 1.12 #/ft Wing Channel; EXAL= Extruded Alum Sign Panels	BRIDGE MOUNT CLEARANCE SIGNS (See Note 2) TY = TYPE
							FRP = Fiberglass TWT = Thin-Wall 10BWG = 10 BWG S80 = Sch 80	1 or 2	UA=Universal Conc UB=Universal Bolt SA=Slipbase-Conc SB=Slipbase-Bolt WS=Wedge Steel WP=Wedge Plastic	P = "Plain" T = "T" U = "U"		TY N TY S
			SH 29 AT BLUEBONNET PLAZA									
	A		LEFT TURN YIELD ON FLASHING YELLOW ARROW	36"X42"	X				MOUNT ON MAST ARM P-1			
	E	R10-17T		36"X42"	X				MOUNT ON MAST ARM P-3			
	I			36"X42"	X				MOUNT ON MAST ARM P-5			
	K			36"X42"	X				MOUNT ON MAST ARM P-7			
	B	R3-5R	ONLY	30"X36"	X				MOUNT ON MAST ARM P-1			
	C	ILSN	Bluebonnet Plz	132"X24"					MOUNT ON MAST ARM P-1			
	J			132"X24"					MOUNT ON MAST ARM P-5			
	D	R9-3		18"X18"	X				MOUNT ON SIGNAL POLE P-1			
	N			18"X18"	X				MOUNT ON SIGNAL POLE P-7			
	F	R3-8LK	ONLY	36"X30"	X				MOUNT ON MAST ARM P-3			
	L			36"X30"	X				MOUNT ON MAST ARM P-7			
	G	R10-11	NO TURN ON RED	24"X30"	X				MOUNT ON MAST ARM P-3			
	O			24"X30"	X		10BWG	1	SA	P		
	H	ILSN	University Ave	120"X24"					MOUNT ON MAST ARM P-3			
	M			120"X24"					MOUNT ON MAST ARM P-7			

ALUMINUM SIGN BLANKS THICKNESS	
Square Feet	Minimum Thickness
Less than 7.5	0.080"
7.5 to 15	0.100"
Greater than 15	0.125"

The Standard Highway Sign Designs for Texas (SHSD) can be found at the following website.

http://www.txdot.gov/

NOTE:

1. Sign supports shall be located as shown on the plans, except that the Engineer may shift the sign supports, within design guidelines, where necessary to secure a more desirable location or to avoid conflict with utilities. Unless otherwise shown on the plans, the Contractor shall stake and the Engineer will verify all sign support locations.
2. For installation of bridge mount clearance signs, see Bridge Mounted Clearance Sign Assembly (BMCS)Standard Sheet.
3. For Sign Support Descriptive Codes, see Sign Mounting Details Small Roadside Signs General Notes & Details SMD(GEN).

STATE OF TEXAS
CHRISTOPHER J. PIERCE
92541
LICENSED PROFESSIONAL ENGINEER

Digitally signed by Christopher Pierce
Date: 2025.12.16 16:46:34-06'00'

CHRISTOPHER J. PIERCE, P.E.
LEE ENGINEERING, L.L.C., REGISTRATION NO. F-450

Texas Department of Transportation

Traffic Operations Division Standard

SUMMARY OF SMALL SIGNS

SOSS

FILE: sums16.dgn	DN: TxDOT	CK: TxDOT	DW: TxDOT	CK: TxDOT
©TxDOT May 1987	CONT	SECT	JOB	HIGHWAY
REVISIONS				SH 29
4-16	DIST	COUNTY		SHEET NO.
8-16	AUS	WILLIAMSON		176

The CONTRACTOR shall notify Mr. Lua Saluone, Transportation Manager with the City of Georgetown at 512-930-6474, Kevin Plumlee with TxDOT at kevin.plumlee@txdot.gov, Rick Thomas of TxDOT at rick.thomas@txdot.gov, and Gabriela Perales with TxDOT at gabriela.perales@txdot.gov at least one week prior to starting work on this project.

The CONTRACTOR will only be allowed to work on this project between the hours of 9 AM and 3:30 PM Monday - Friday.

The CONTRACTOR shall clean up and remove from work area all loose material resulting from the contract operations each day before work is suspended.

Any obstructions to existing drainage due to the CONTRACTOR's operations will be removed by the CONTRACTOR as required by the City at the CONTRACTOR's entire expense.

The CONTRACTOR shall notify Mr. Lua Saluone, Transportation Manager with the City of Georgetown at 512-930-6474, Kevin Plumlee with TxDOT at kevin.plumlee@txdot.gov, Rick Thomas of TxDOT at rick.thomas@txdot.gov, and Gabriela Perales with TxDOT at gabriela.perales@txdot.gov at least 14 days prior to the traffic signal turn-on.

THE TRAFFIC SIGNAL INSTALLATION CONSISTS OF THE FOLLOWING PRINCIPAL ITEMS:

1. Furnishing and installing traffic signal controller.
2. Furnishing and installing vehicular and pedestrian signal heads, and signal cable.
3. Furnishing and installing accessible pedestrian signals and communication equipment.
4. Furnishing and installing vehicle detection and illuminated street name signs.
5. The CONTRACTOR shall also furnish and install all other items not listed above which are needed to provide the complete traffic signal installation as called for in the plans and specifications.
6. Unless directed by the City, the signal shall be placed in operation between 9:00 A.M. and 12:00 P.M. (noon) on Monday, Tuesday, or Wednesday only.

SIGNAL TECHNICIAN

A signal technician from the City of Georgetown and TxDOT shall be present when the new signal is placed in operation. The Contractor shall notify Mr. Randell Young with the City of Georgetown at randell.young@georgetowntexas.gov, Kevin Plumlee with TxDOT at kevin.plumlee@txdot.gov, Rick Thomas of TxDOT at rick.thomas@txdot.gov, and Gabriela Perales with TxDOT at gabriela.perales@txdot.gov at least 14 days in advance of the turn on.

TEST PERIOD FOR SIGNALS

Once the equipment has been installed and placed in operation, they shall operate continuously for a minimum of 30 calendar days in a satisfactory manner. Equipment failures during these 30 days will cause the test period to start over.

PHASES OF SIGNAL OPERATION

The signal installation shall be wired to operate in accordance with phase diagrams in these plans.

ITEM 620 - ELECTRICAL CONDUCTORS

The equipment grounding conductor shall be identified by a continuous green colored jacket insulation or bare wire. Grounded conductors (Neutral) shall be identified by a continuous white colored jacket. Ungrounded conductors (Hot) in a 120/240v or 240/480v system shall be identified by each pole or leg. For 240-volt branch circuit fed from 120/240 source and 480-volt branch circuit fed from 240/480 source, ensure one leg is identified by a continuous black colored jacket and the other leg by a continuous red colored jacket.

Grounding conductors that share the same conduit, ground box, or structure shall be bonded together at every accessible point in accordance with the NEC.

Provide Engineer, in addition to any submittals required by the specifications and elsewhere in the general notes, a list of pre-qualified material to be used on this project.

ITEM 628 - ELECTRICAL SERVICE

For electric meter account set up, please contact Public Works Operation Manager Molly K. Ritter at 512-930-8152 or molly.ritter@georgetowntexas.gov.

ITEM 636 - SIGNING

All new signs mounted on the signal poles and mast arms, except for illuminated street name signs (ILSNs), shall be paid for according to Item 636.

Mount signs with Astro-Sign Brac, Signfix aluminum channel, or equal as approved by the Engineer. Submit five (5) sets of shop drawings to the City for the ILSNs.

ITEM 644 - SMALL ROADSIDE SIGN ASSEMBLIES

Prior to taking elevations to determine lengths for fabrication of sign posts, obtain verification of all proposed locations.

All sign mounts shall have a clamp base system for all small roadside sign assemblies.

ITEM 666 - PAVEMENT MARKINGS

All pavement markings installed shall be 100 MIL thermoplastic. All markings shall be furnished and installed by the CONTRACTOR.

ITEM 677 - ELIMINATING EXISTING PAVEMENT MARKINGS AND MARKERS

A water blasting method approved by the Engineer will be the only method allowed for the removal of permanent and temporary pavement markings except on a sealcoat surface. A 2 foot wide sealcoat will be required on sealcoat surfaces to eliminate permanent and temporary pavement markings.

ITEM 678 - PAVEMENT SURFACE PREPARATION FOR MARKINGS

Contractor shall prepare pavement surface area before placement of pavement markings or markers in accordance with Item 678 of the 2024 Specifications.

ITEM 680 - INSTALLATION OF HIGHWAY TRAFFIC SIGNALS

Requirements for this item include the following work, all of which are subsidiary to this Item:

1. Provide submittal literature for all traffic signal equipment before installation.
2. Furnish and install a new traffic signal controller specified by the City of Georgetown.
3. Bench testing of the controller and cabinet assembly will be performed by the Contractor.
4. Connect all field wiring to the controller assembly. The City will assist in determining how the detection cables are to be connected. Have a qualified technician and a representative from the controller supplier on the project site to place the traffic signals in operation.
5. Remove the existing stop sign assemblies after the traffic signals are in operation.
6. Use qualified personnel to respond to and diagnose all trouble calls during the thirty-day test period. Repair any malfunction to Contractor-supplied signal equipment. Provide to the Engineer a local telephone number, not subject to frequent changes and available on a 24 hour basis, for reporting trouble calls. Response time to reported calls must be less than 2 hours. Make appropriate repairs within 24 hours. Place a logbook in the controller cabinet and keep a record of each trouble call reported. Notify the Engineer of each trouble call. Do not clear the error log in the conflict monitor or MMU during the thirty-day test period without approval.

TRAFFIC SIGNAL CONTROLLER AND CABINET ASSEMBLY

CONTRACTOR shall furnish and install a Yunex M60 NEMA traffic signal controller with a Mobotrex TS2 Type 1 cabinet assembly per City of Georgetown Specifications.
Payment shall be in accordance with Item 680.

STATE OF TEXAS
CHRISTOPHER J. PIERCE
92541
LICENSED PROFESSIONAL ENGINEER

Digitally signed by Christopher Pierce
Date: 2025.12.13 18:53:41-06'00'

CHRISTOPHER J. PIERCE, P.E.

LEE ENGINEERING
3030 LBJ FREEWAY, SUITE 1660
DALLAS, TX 75234
972.248.3006
TBPE FIRM #F-450

SH 29 (UNIVERSITY AVE)
AT BLUEBONNET PLAZA

TRAFFIC SIGNAL GENERAL NOTES (1 OF 2)

STATE	CITY	COUNTY	HIGHWAY NO.	SHEET NO.
TEXAS	GEORGETOWN	WILLIAMSON	SH 29	177

ITEM 682 - SIGNAL HEADS

Install signal head attachments so that the wiring to each signal head passes from the mast arm through the attachment hardware to the signal head. Do not leave cable or wiring exposed.

Provide signal head attachments that allow for adjustment about the horizontal and vertical axis.

Provide aluminum signal heads and aluminum tubing in the following color: Federal Yellow #13538 of Federal Standard 595. Provide vented aluminum backplates with a black powder coating and the inside of the visors with a flat black finish.

Turn down new signal heads or cover with burlap or other material, as approved, until the new traffic signal equipment is placed into operation.

Mount signal heads level and plumb and aim as directed.

All signal heads shall be mounted horizontally unless otherwise shown in the plans.

All traffic signal heads shall be LED.

All backplates shall include a 2" retroreflective border.

ITEM 684 - CABLE

The CONTRACTOR shall furnish and install stranded 14 AWG Type A signal cables for LED signal heads.

Provide a separate multi-conductor signal cable (14 AWG) inside signal poles from the terminal strip to each signal head as shown on the plans.

Identify each cable as shown on the plans (cable 1, etc.) with permanent marking labels (Panduit Type PLM standard single marker tie, Thomas & Betts Type 548M, or equal) at each ground box, pole base, and controller.

Extra cable length shall be included in each run to provide adequate slack, as determined by the City, at each ground box or foundation.

No splices shall be allowed in any cable.

ITEM 686 - TRAFFIC SIGNAL POLE ASSEMBLIES

Mark mast arms with identification numbers from the plans to facilitate field assembly.

Due to SH 29 being on the Texas Highway Freight Network, a minimum vertical clearance of 19.5 feet from the roadway to the lowest point of the signal head or mast arm is required. Except for supplemental nearside signal heads, all signal heads must be installed at least 40 feet from the stop line. If field adjustments result in the nearest signal head being more than 180 feet from the stop line, install a supplemental nearside signal head as directed by the Engineer. Determine the field measurements and elevations from the actual field location of the poles, considering all above and below ground utilities and existing roadway elevations.

Provide vibration dampers for mast arms 28 feet to 48 feet in length. Install as shown on standard MA-DPD-20.

ITEM 688 - ACCESSIBLE PEDESTRIAN SIGNAL UNITS

The CONTRACTOR shall furnish and install iN2 - iNavigator 2-Wire Accessible Pedestrian Signal units where noted in the plans.

If a traffic signal pole or pedestal pole includes two APS units, or if the APS units cannot be installed a minimum of 10' apart, speech walk messages shall be used. Each speech walk message shall be programmed to clearly state the name of the roadway to be crossed as a result of activating that particular APS unit.

Verify the location of the APS units and the direction of the arrows on the signs prior to installation.

The button placement must be coordinated with the concrete pad to access the button according to ADA and TAS. If any mounting modifications are needed (extensions, brackets, etc.) to meet ADA and TAS requirements the adjustment will be subsidiary to Item 688.

ITEM 6001 - LED INTERNALLY ILLUMINATED STREET NAME SIGNS

The CONTRACTOR shall furnish and install internally illuminated street name signs (ILSN) on the project as detailed in the plans. For ILSN signs, the Contractor shall provide "Southern Manufacturing Clean Profile LED illuminated street name sign" or other equivalent signs approved by the City.

ITEM 6006 - VIDEO IMAGING VEHICLE DETECTION SYSTEM

The CONTRACTOR shall furnish and install an Iteris Vantage Next detection system for presence detection only and an Iteris Vantage Vector Hybrid Detection System for presence and advanced detection, as noted on the plans including cable.

If camera locations shown in the plans do not allow for proper sight of the proposed detection zones, relocate the cameras as needed and as directed. This labor and material cost will not be paid separately, but is considered part of the lump sum.

ITEM 6007 - BATTERY BACK-UP SYSTEM FOR TRAFFIC SIGNALS

The CONTRACTOR shall furnish and install an Iteris Myers Uninterruptible Power Supply (UPS) system and batteries. The UPS system shall include an ethernet port.

THRUGREEN COMMUNICATION SYSTEM

The CONTRACTOR shall furnish and install a Thrugreen communication system inside the traffic signal controller cabinet.

Contractor shall have City staff and qualified personnel on-site at the time of activation to verify the system is operational and connected.

CONTRACTOR'S RESPONSIBILITY FOR THE WORK

The CONTRACTOR shall be responsible for all installations until accepted by the City as required by the general provisions and requirements. Should "knock downs" occur, the CONTRACTOR shall be responsible for all labor to reinstall said equipment at no additional cost to the City. If new equipment is required, as determined by the City, the CONTRACTOR shall provide replacement equipment at no additional cost to the City.

HANDLING OF TRAFFIC

Roads and streets shall be kept open to traffic at all times. The CONTRACTOR shall, unless otherwise directed by the City, arrange the work in the roadway so as to close only one lane of a roadway at a time. All construction operations shall be conducted to provide the least possible interference to traffic as provided in the specifications and/or as directed by the City.

A Traffic Control Plan (TCP) for this project shall be as detailed on Standard Sheets WZ (BTS-1)-13 and WZ (BTS-2)-13. All construction signs shall be mounted on fixed supports (4" x 4" wood posts) unless otherwise directed by the City.

ITEMS TO BE PAID FOR SUBSIDIARY TO ITEM 680

FURNISH & INSTALL TRAFFIC SIGNAL CONTROLLER ASSEMBLY - 1 EA

FURNISH & INSTALL PEDESTAL POLE TRANSFORMER BASE - 1 EA

REMOVE EXISTING PEDESTAL POLE TRANSFORMER BASE - 1 EA

FURNISH & INSTALL A THRUGREEN COMMUNICATION SYSTEM - 1 LS

STATE OF TEXAS
CHRISTOPHER J. PIERCE
92541
LICENSED PROFESSIONAL ENGINEER

Digitally signed by Christopher Pierce
Date: 2025.12.16 16:45:07-06'00'

CHRISTOPHER J. PIERCE, P.E.

LEE ENGINEERING
3030 LBJ FREEWAY, SUITE 1660
DALLAS, TX 75234
972.248.3006
TBPE FIRM #F-450

SH 29 (UNIVERSITY AVE)
AT BLUEBONNET PLAZA

TRAFFIC SIGNAL GENERAL NOTES (2 OF 2)

STATE	CITY	COUNTY	HIGHWAY NO.	SHEET NO.
TEXAS	GEORGETOWN	WILLIAMSON	SH 29	178



0 10 20 30

SCALE IN FEET

LEGEND OF SYMBOLS

	SIGNAL POLE ASSEMBLY
P - 1	POLE NUMBERS
	GROUND MOUNTED CONTROLLER CABINET
	GROUND BOX
	PEDESTAL POLE ASSEMBLY
	ELECTRICAL SERVICE METER
	LUMINAIRE

REMOVAL SUMMARY

TXDOT SPEC NO.	TXDOT DESC. CODE	DESCRIPTION	UNIT	QTY
644	7073	REMOVE SM RD SN SUP&AM	EA	1
677	7001	ELIM EXT PM & MRKS (4")	LF	60
677	7004	ELIM EXT PM & MRKS (8")	LF	5
677	7008	ELIM EXT PM & MRKS (24")	LF	24

STATE OF TEXAS
CHRISTOPHER J. PIERCE
92541
LICENSED PROFESSIONAL ENGINEER

Digitally signed by Christopher Pierce
Date: 2025.12.13 18:55:35-06'00'

CHRISTOPHER J. PIERCE, P.E.

LEE ENGINEERING
3030 LBJ FREEWAY, SUITE 1660
DALLAS, TX 75234
972.248.3006
TBPE FIRM #F-450

SH 29 (UNIVERSITY AVE) AT BLUEBONNET PLAZA

EXISTING TRAFFIC SIGNAL CONDITIONS & REMOVAL LAYOUT

STATE	CITY	COUNTY	HIGHWAY NO.	SHEET NO.
TEXAS	GEORGETOWN	WILLIAMSON	SH 29	179

CONDUIT RUNS AND CABLE CHART

RUN NO.	CONDUIT STATUS	CONDUIT PERCENT FILL	ITEM 618 CONDUIT SIZE/TYPE (FEET)				CABLE STATUS	ITEM 620 ELECTRICAL CONDUCTORS (FEET)								ITEM 684 TRAFFIC SIGNAL CABLES						ITEM 6006		TOTAL LENGTH OF RUN (FEET)	RUN NO.
			2" PVC - Trenched (SCHD 80)	2" PVC - Trenched (SCHD 40)	3" PVC - Trenched (SCHD 40)	3" PVC - Bored (SCHD 80)		NO. 6 XHHW POWER WIRE		NO. 6 BARE WIRE		NO. 8 XHHW WIRE (LUM.)		NO. 8 XHHW WIRE (ILSN)		TY A 5 CNDR. CABLE (#14 AWG)		TY A 7 CNDR. CABLE (#14 AWG)		TY C 2 CNDR. CABLE (#12 AWG)		VIVIDS DETECTION			
DIAM. (IN.)			1.939	2.067	3.068	2.900		0.271		0.143		0.233		0.233		0.426		0.463		0.397		0.896			
---			LF	LF	LF	LF		QTY	LF	QTY	LF	QTY	LF	QTY	LF	QTY	LF	QTY	LF	QTY	LF	QTY	LF		
1	E	3%		15			I			1	15	2	30											15	1
2	E	8%			15		I			1	15					3	45	1	15					15	2
3	E	9%			15		I			1	15											1	15	15	3
4	E	8%		25			I			1	25					1	25			1	25			25	4
5	E	0%				110	I			1	110													110	5
6	E	0%				110	I			1	110													110	6
7	E	0%				110	I			1	110													110	7
8	E	6%		25			I			1	25	2	50	2	50									25	8
9	E	8%			25		I			1	25					3	75	1	25					25	9
10	E	10%			25		I			1	25									1	25	1	25	25	10
11	E	8%		10			I			1	10					1	10			1	10			10	11
12	E	3%				130	I			1	130	2	260	2	260									130	12
13	E	11%				130	I			1	130					4	520	1	130					130	13
14	E	14%				130	I			1	130									2	260	1	130	130	14
15	E	11%		15			I			1	15	4	60	4	60									15	15
16	E	8%			15		I			1	15					3	45	1	15					15	16
17	E	10%			15		I			1	15									1	15	1	15	15	17
18	E	8%		15			I			1	15					1	15			1	15			15	18
19	E	3%				70	I			1	70	2	140	2	140									70	19
20	E	20%				70	I			1	70					7	490	2	140					70	20
21	E	23%				70	I			1	70									2	140	2	140	70	21
22	E	8%		10			I			1	10	4	40	2	20									10	22
23	E	8%			10		I			1	10					3	30	1	10					10	23
24	E	10%			10		I			1	10									1	10	1	10	10	24
25	E	2%				120	I			1	120	2	240											120	25
26	E	11%				120	I			1	120					4	480	1	120					120	26
27	E	12%				120	I			1	120									1	120	1	120	120	27
28	E	11%		30			I			1	30	4	120	4	120									30	28
29	E	38%			30		I			1	30					15	450	4	120					30	29
30	E	10%			30		I			1	30									6	180			30	30
31	E	34%			30		I			1	30											4	120	30	31
32	E	23%		55			I			1	55									6	330			55	32
33	E	38%			55		I			1	55					15	825	4	220					55	33
34	E	34%			55		I			1	55											4	220	55	34
35	E	11%		195			I			1	195	4	780	4	780									195	35
36	E	4%		140			I	2	280	1	140													140	36
SUBTOTAL	---	---	0	0	0	0	---	280		2,155		1,720		1,430		3,010		795		1,130		795		SUBTOTAL	
WIRE INSIDE POLE																									
P-1							P					90				106		64				60		VARIES	P-1
P-2							P									10				5				VARIES	P-2
P-3							P					90		50		103		68		5		60		VARIES	P-3
P-4							P									10				5				VARIES	P-4
P-5							P					90				97		64		5		58		VARIES	P-5
P-6							P									10				5				VARIES	P-6
P-7							P					90		50		60		52		5		39		VARIES	P-7
SUBTOTAL	---	---						0		0		360		100		396		248		30		217		SUBTOTAL	
TOTAL	---	---	0	0	0	0		280		2,155		2,080		1,530		3,406		1,043		1,160		1,012		TOTAL	

CONDUIT / CABLE STATUS: E=EXISTING; I=INSTALL; A=ABANDON; AC=AERIAL CABLE; R=REMOVE AND SALVAGE; P=INSTALL WIRE INSIDE STEEL POLE

ONLY NEW TOTAL QUANTITIES ARE SHOWN IN THE TABLE ABOVE.

STATE OF TEXAS
CHRISTOPHER J. PIERCE
92541
LICENSED PROFESSIONAL ENGINEER

Digitally signed by Christopher Pierce
Date: 2026.01.08 11:47:44-06'00'

CHRISTOPHER J. PIERCE, P.E.

LEE ENGINEERING
3030 LBJ FREEWAY, SUITE 1660
DALLAS, TX 75234
972.248.3006
TBPE FIRM #F-450

SH 29 (UNIVERSITY AVE) AT BLUEBONNET PLAZA

PROPOSED TRAFFIC SIGNAL TABLES (1 OF 6)

STATE	CITY	COUNTY	HIGHWAY NO.	SHEET NO.
TEXAS	GEORGETOWN	WILLIAMSON	SH 29	181

CONDUIT RUNS AND CABLE CHART

RUN NO.	CONDUIT STATUS	CONDUIT PERCENT FILL	ITEM 618 CONDUIT SIZE/TYPE (FEET)				CABLE STATUS	ITEM 620 ELECTRICAL CONDUCTORS (FEET)								ITEM 684 TRAFFIC SIGNAL CABLES						ITEM 6006		TOTAL LENGTH OF RUN (FEET)	RUN NO.
			2" PVC - Trenched (SCHD 80)	2" PVC - Trenched (SCHD 40)	3" PVC - Trenched (SCHD 40)	3" PVC - Bored (SCHD 80)		NO. 6 XHHW POWER WIRE		NO. 6 BARE WIRE		NO. 8 XHHW WIRE (LUM.)		NO. 8 XHHW WIRE (ILSN)		TY A 5 CNDR. CABLE (#14 AWG)		TY A 7 CNDR. CABLE (#14 AWG)		TY C 2 CNDR. CABLE (#12 AWG)		VIVIDS DETECTION			
DIAM. (IN.)			1.939	2.067	3.068	2.900		0.271		0.143		0.233		0.233		0.426		0.463		0.397		0.896			
---			LF	LF	LF	LF		QTY	LF	QTY	LF	QTY	LF	QTY	LF	QTY	LF	QTY	LF	QTY	LF	QTY	LF		
1	E	3%		15			I			1	15	2	30											15	1
2	E	8%			15		I			1	15					3	45	1	15					15	2
3	E	9%			15		I			1	15											1	15	15	3
4	E	8%		25			I			1	25					1	25			1	25			25	4
5	E	0%				110	I			1	110													110	5
6	E	0%				110	I			1	110													110	6
7	E	0%				110	I			1	110													110	7
8	E	6%		25			I			1	25	2	50	2	50									25	8
9	E	8%			25		I			1	25					3	75	1	25					25	9
10	E	10%			25		I			1	25									1	25	1	25	25	10
11	E	8%		10			I			1	10					1	10			1	10			10	11
12	E	3%				130	I			1	130	2	260	2	260									130	12
13	E	11%				130	I			1	130					4	520	1	130					130	13
14	E	14%				130	I			1	130									2	260	1	130	130	14
15	E	11%		15			I			1	15	4	60	4	60									15	15
16	E	8%			15		I			1	15					3	45	1	15					15	16
17	E	10%			15		I			1	15									1	15	1	15	15	17
18	E	8%		15			I			1	15					1	15			1	15			15	18
19	E	3%				70	I			1	70	2	140	2	140									70	19
20	E	20%				70	I			1	70					7	490	2	140					70	20
21	E	23%				70	I			1	70									2	140	2	140	70	21
22	E	8%		10			I			1	10	4	40	2	20									10	22
23	E	8%			10		I			1	10					3	30	1	10					10	23
24	E	10%			10		I			1	10									1	10	1	10	10	24
25	E	2%				120	I			1	120	2	240											120	25
26	E	11%				120	I			1	120					4	480	1	120					120	26
27	E	12%				120	I			1	120									1	120	1	120	120	27
28	E	11%		30			I			1	30	4	120	4	120									30	28
29	E	38%			30		I			1	30					15	450	4	120					30	29
30	E	10%			30		I			1	30									6	180			30	30
31	E	34%			30		I			1	30											4	120	30	31
32	E	23%		55			I			1	55									6	330			55	32
33	E	38%			55		I			1	55					15	825	4	220					55	33
34	E	34%			55		I			1	55											4	220	55	34
35	E	11%		195			I			1	195	4	780	4	780									195	35
36	E	4%		140			I	2	280	1	140													140	36
SUBTOTAL	---	---	0	0	0	0	---	280		2,155		1,720		1,430		3,010		795		1,130		795		SUBTOTAL	
WIRE INSIDE POLE																									
P-1							P					90				106		64				60		VARIES	P-1
P-2							P									10				5				VARIES	P-2
P-3							P					90		50		103		68		5		60		VARIES	P-3
P-4							P									10				5				VARIES	P-4
P-5							P					90				97		64		5		58		VARIES	P-5
P-6							P									10				5				VARIES	P-6
P-7							P					90		50		60		52		5		39		VARIES	P-7
SUBTOTAL	---	---						0		0		360		100		396		248		30		217		SUBTOTAL	
TOTAL	---	---	0	0	0	0		280		2,155		2,080		1,530		3,406		1,043		1,160		1,012		TOTAL	

CONDUIT / CABLE STATUS: E=EXISTING; I=INSTALL; A=ABANDON; AC=AERIAL CABLE; R=REMOVE AND SALVAGE; P=INSTALL WIRE INSIDE STEEL POLE

ONLY NEW TOTAL QUANTITIES ARE SHOWN IN THE TABLE ABOVE.

STATE OF TEXAS
CHRISTOPHER J. PIERCE
92541
LICENSED PROFESSIONAL ENGINEER

Digitally signed by Christopher Pierce
Date: 2026.01.08 11:47:44-06'00'

CHRISTOPHER J. PIERCE, P.E.

LEE ENGINEERING
3030 LBJ FREEWAY, SUITE 1660
DALLAS, TX 75234
972.248.3006
TBPE FIRM #F-450

SH 29 (UNIVERSITY AVE) AT BLUEBONNET PLAZA

PROPOSED TRAFFIC SIGNAL TABLES (1 OF 6)

STATE	CITY	COUNTY	HIGHWAY NO.	SHEET NO.
TEXAS	GEORGETOWN	WILLIAMSON	SH 29	181

CABLE TERMINATION CHART								
	CONDUCTOR COLOR	CABLE 1 FROM POLE P-1 TO CNTRL 7 CNDR	CABLES 2, 3 & 4 FROM POLE P-1 TO CNTRL 5 CNDR	CABLE 5 FROM POLE P-2 TO CNTRL 5 CNDR	CABLE 6 FROM POLE P-3 TO CNTRL 7 CNDR	CABLES 7 & 8 FROM POLE P-3 TO CNTRL 5 CNDR	CABLE 9 FROM POLE P-3 TO CNTRL 5 CNDR	CABLE 10 FROM POLE P-4 TO CNTRL 5 CNDR
1	BLACK	SH 1 PH 1 YA LT	SH 2, 3, 4 PH 6 Y	SPARE	SH 6 PH 3 YA LT	SH 7, 8 PH 8 Y	SPARE	SPARE
2	WHITE	SIG COMMON	SIG COMMON	SIG COMMON	SIG COMMON	SIG COMMON	SIG COMMON	SIG COMMON
3	RED	SH 1 PH 1 RA LT	SH 2, 3, 4 PH 6 R	SH 5 PH 6 DW	SH 6 PH 3 RA LT	SH 7, 8 PH 8 R	SH 9 PH 6 DW	SH 10 PH 8 DW
4	GREEN	SH 1 PH 1 GA LT	SH 2, 3, 4 PH 6 G	SH 5 PH 6 W	SH 6 PH 3 GA LT	SH 7 & 8 PH 8 G	SH 9 PH 6 W	SH 10 PH 8 W
5	ORANGE	SH 1 OLA FYA LT	SPARE	SPARE	SH 6 OLB FYA LT	SPARE	SPARE	SPARE
6	BLUE	SPARE			SPARE			
7	WHITE/BLACK	SPARE			SPARE			

R = RED BALL; Y = YELLOW BALL; G = GREEN BALL; RA = RED ARROW; YA = YELLOW ARROW; GA = GREEN ARROW
FYA = FLASHING YELLOW ARROW; RT = RIGHT TURN; LT = LEFT TURN; DW = DONT WALK; W = WALK

CABLE TERMINATION CHART, CONT								
	CONDUCTOR COLOR	CABLE 11 FROM POLE P-5 TO CNTRL 7 CNDR	CABLES 12 & 13 FROM POLE P-5 TO CNTRL 5 CNDR	CABLE 14 FROM POLE P-5 TO CNTRL 5 CNDR	CABLE 15 FROM POLE P-6 TO CNTRL 5 CNDR	CABLE 16 FROM POLE P-7 TO CNTRL 7 CNDR	CABLES 17 & 18 FROM POLE P-7 TO CNTRL 5 CNDR	CABLE 19 FROM POLE P-7 TO CNTRL 5 CNDR
1	BLACK	SH 11 PH 5 YA LT	SH 12, 13 PH 2 Y	SPARE	SPARE	SH 16 PH 7 YA LT	SH 17, 18 PH 4 Y	SPARE
2	WHITE	SIG COMMON	SIG COMMON	SIG COMMON	SIG COMMON	SIG COMMON	SIG COMMON	SIG COMMON
3	RED	SH 11 PH 5 RA LT	SH 12, 13 PH 2 R	SH 14 PH 8 DW	SH 15 PH 2 DW	SH 16 PH 7 RA LT	SH 17, 18 PH 4 R	SH 19 PH 2 DW
4	GREEN	SH 11 PH 5 GA LT	SH 12, 13 PH 2 G	SH 14 PH 8 W	SH 15 PH 2 W	SH 16 PH 7 GA LT	SH 17, 18 PH 4 G	SH 19 PH 2 W
5	ORANGE	SH 11 OLC FYA LT	SPARE	SPARE	SPARE	SH 16 OLD FYA LT	SPARE	SPARE
6	BLUE	SPARE				SPARE		
7	WHITE/BLACK	SPARE				SPARE		

R = RED BALL; Y = YELLOW BALL; G = GREEN BALL; RA = RED ARROW; YA = YELLOW ARROW; GA = GREEN ARROW
FYA = FLASHING YELLOW ARROW; RT = RIGHT TURN; LT = LEFT TURN; DW = DONT WALK; W = WALK

STATE OF TEXAS
CHRISTOPHER J. PIERCE
92541
LICENSED PROFESSIONAL ENGINEER

Digitally signed by Christopher Pierce
Date: 2025.12.13 18:58:43-06'00'

CHRISTOPHER J. PIERCE, P.E.

LEE ENGINEERING
3030 LBJ FREEWAY, SUITE 1660
DALLAS, TX 75234
972.248.3006
TBPE FIRM #F-450

SH 29 (UNIVERSITY AVE)
AT BLUEBONNET PLAZA

PROPOSED TRAFFIC SIGNAL
TABLES (2 OF 6)

STATE	CITY	COUNTY	HIGHWAY NO.	SHEET NO.
TEXAS	GEORGETOWN	WILLIAMSON	SH 29	182

ITEM 682 - SIGNAL HEADS											
SIGNAL HEAD NO.	SIGNAL HEAD TYPE	12" SIGNAL INDICATION			VEHICLE SIGNAL SECTIONS						PEDESTRIAN SIGNAL SECTIONS
		BACKPLATE			RED BALL	YELLOW BALL	GREEN BALL	RED ARROW	YELLOW ARROW	GREEN ARROW	
		3 SEC (EA)	4 SEC (EA)	5 SEC (EA)							
2, 3, 7, 8, 12, 13, 17	H3	7			7	7	7				
1, 6, 11, 16	H4FLT		4					4	8	4	
4, 18	V3	2			2	2	2				
5, 9, 10, 14, 15, 19	COUNTDOWN										6
	TOTAL	9	4	0	9	9	9	4	8	4	6

ALL BACKPLATES SHALL INCLUDE A 2" YELLOW RETROREFLECTIVE STRIP PER TXDOT STANDARD TS-BP-20.

H3

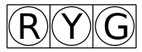

H4FLT

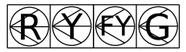

V3

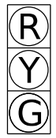

COUNTDOWN PEDESTRIAN SIGNAL HEAD

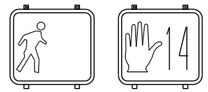

NOTES:

1. INFORMATION SHOWN ON THESE DRAWINGS CONCERNING SIGNAL EQUIPMENT,PAVEMENT MARKINGS, SIGNING, RIGHT-OF-WAY, AND UTILITIES IS NOT GUARANTEED TO BE ACCURATE OR ALL-INCLUSIVE. BEFORE CONSTRUCTION, CONTRACTOR SHALL DETERMINE THE TYPE AND LOCATION OF EXISTING UTILTIES TO AVOID DAMAGE THERETO.

2. CONTRACTOR SHALL CONTACT LUA SALUONE WITH THE CITY OF GEORGETOWN AT 512-930-6574, KEVIN PLUMLEE WITH TXDOT AT KEVIN.PLUMLEE@TXDOT.GOV, ROBERT BOLIN WITH TXDOT AT ROBERT.BOLIN@TXDOT.GOV, RICK THOMAS WITH TXDOT AT RICK.THOMAS@TXDOT.GOV, AND GABRIELA PERALES WITH TXDOT AT GABRIELA PERALES@TXDOT.GOV AT LEAST TWO WEEKS IN ADVANCE TO COORDINATE WORK.

3. THE LOCATIONS OF PROPOSED SIGNAL EQUIPMENT IS DIAGRAMMATIC ONLY AND MAY BE SHIFTED BY THE ENGINEER TO ACCOMMODATE FIELD CONDITIONS.

4. THE INFORMATION SHOWN ON THESE DRAWINGS CONCERNING THE TYPE AND LOCATION OF OVERHEAD AND UNDERGROUND UTILITIES IS NOT GUARANTEED TO BE ACCURATE OR ALL INCLUSIVE. THE CONTRACTOR IS RESPONSIBLE FOR VERIFYING THE TYPE AND LOCATION OF EXISTING UTILITIES IN ORDER TO AVOID ANY DAMAGE.

5. PROPOSED APS UNITS SHALL BE PLACED ADJACENT TO A LEVEL LANDING AREA (2% MAX SLOPE IN ANY DIRECTION). IF THE DISTANCE FROM THE PUSH BUTTON TO THE EDGE OF THE ACCESSIBLE PATH EXCEEDS 10", THE CONTRACTOR SHALL FURNISH AND INSTALL A PUSH BUTTON EXTENDER TO MAKE THE REACH 10" OR LESS. PAYMENT FOR THE EXTENDER SHALL BE CONSIDERED SUBSIDIARY TO ITEM 688.

6. CONTRACTOR SHALL FURNISH AND INSTALL A NEW TRANSFORMER BASE FOR PEDESTAL POLE P-6. PAYMENT SHALL BE SUBSIDIARY TO ITEM 680.

7. ALL EXISTING CABLE LOCATED WITHIN THE GROUND BOXES, CABINET, ETC. SHALL BE REMOVED AND RETURNED TO THE CITY OF GEORGETOWN.



Digitally signed by Christopher Pierce
Date: 2025.12.13 18:59:19-06'00'

CHRISTOPHER J. PIERCE, P.E.

LEE ENGINEERING
3030 LBJ FREEWAY, SUITE 1660
DALLAS, TX 75234
972.248.3006
TBPE FIRM #F-450

SH 29 (UNIVERSITY AVE)
AT BLUEBONNET PLAZA

PROPOSED TRAFFIC SIGNAL TABLES (3 OF 6)

STATE	CITY	COUNTY	HIGHWAY NO.	SHEET NO.
TEXAS	GEORGETOWN	WILLIAMSON	SH 29	183

ITEMS 636, 644 AND 6001 - SIGN & ILSN SUMMARY										
ID	TYPE	LEGEND	EXIST	REM	REL	REP	INST	HARDWARE & SUPPORT	LOCATION	SIGN QTY
A	R10-17T	LEFT TURN YIELD ON FLASHING YELLOW ARROW					1	1	MAST ARM P-1	10.5 SF
B	R3-5R	RIGHT TURN ONLY					1	1	MAST ARM P-1	7.5 SF
C	REMOVED FROM PLANS									
D	R9-3	NO PEDESTRIANS					1	1	SIGNAL POLE P-1	2.25 SF
E	R10-17T	LEFT TURN YIELD ON FLASHING YELLOW ARROW					1	1	MAST ARM P-3	10.5 SF
F	R3-8LK	LANE CONFIGURATION SIGN					1	1	MAST ARM P-3	7.5 SF
G	R10-11	NO TURN ON RED (BALL)					1	1	MAST ARM P-3	5 SF
H	ILSN	UNIVERSITY AVE					1	1	MAST ARM P-3	1 EA
I	R10-17T	LEFT TURN YIELD ON FLASHING YELLOW ARROW					1	1	MAST ARM P-5	10.5 SF
J	REMOVED FROM PLANS									
K	R10-17T	LEFT TURN YIELD ON FLASHING YELLOW ARROW					1	1	MAST ARM P-7	10.5 SF
L	R3-8LK	LANE CONFIGURATION SIGN					1	1	MAST ARM P-7	7.5 SF
M	ILSN	UNIVERSITY AVE					1	1	MAST ARM P-7	1 EA
N	R9-3	NO PEDESTRIANS					1	1	SIGNAL POLE P-7	2.25 SF
O	R10-11	NO TURN ON RED (BALL)					1	1	TY 10BWG(1)SA(P) POST	1 EA

EXIST = EXISTING, REM = REMOVE, REL = RELOCATE, REP = REPLACE, INST = INSTALL



TMUTCD SIGN R10-17T
36"X42"
SIGNS A,E,I,K



TMUTCD SIGN R3-5R
30"X36"
SIGN B

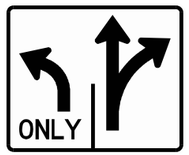

TMUTCD SIGN R3-8LK
36"X30"
SIGNS F,L

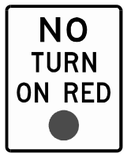

TMUTCD SIGN R10-11
24"X30"
SIGNS G,O



TMUTCD SIGN R9-3
18"X18"
SIGNS D,N

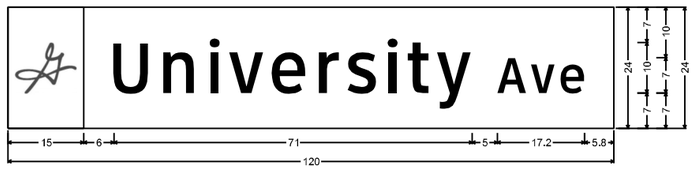

No border, White on Blue;
"University", ClearviewHwy-3-W; "Ave", ClearviewHwy-3-W;
Red logo on White Background

SIGNS H & M

FINAL ILSN DESIGN SHALL BE APPROVED BY THE CITY OF GEORGETOWN PRIOR TO FABRICATION.



Digitally signed by Christopher Pierce
Date: 2026.01.08 11:48:46-06'00'

CHRISTOPHER J. PIERCE, P.E.

LEE ENGINEERING
3030 LBJ FREEWAY, SUITE 1660
DALLAS, TX 75234
972.248.3006
TBPE FIRM #F-450

SH 29 (UNIVERSITY AVE) AT BLUEBONNET PLAZA

PROPOSED TRAFFIC SIGNAL TABLES (5 OF 6)

STATE	CITY	COUNTY	HIGHWAY NO.	SHEET NO.
TEXAS	GEORGETOWN	WILLIAMSON	SH 29	185

ITEMS 636, 644 AND 6001 - SIGN & ILSN SUMMARY										
ID	TYPE	LEGEND	EXIST	REM	REL	REP	INST	HARDWARE & SUPPORT	LOCATION	SIGN QTY
A	R10-17T	LEFT TURN YIELD ON FLASHING YELLOW ARROW					1	1	MAST ARM P-1	10.5 SF
B	R3-5R	RIGHT TURN ONLY					1	1	MAST ARM P-1	7.5 SF
C	REMOVED FROM PLANS									
D	R9-3	NO PEDESTRIANS					1	1	SIGNAL POLE P-1	2.25 SF
E	R10-17T	LEFT TURN YIELD ON FLASHING YELLOW ARROW					1	1	MAST ARM P-3	10.5 SF
F	R3-8LK	LANE CONFIGURATION SIGN					1	1	MAST ARM P-3	7.5 SF
G	R10-11	NO TURN ON RED (BALL)					1	1	MAST ARM P-3	5 SF
H	ILSN	UNIVERSITY AVE					1	1	MAST ARM P-3	1 EA
I	R10-17T	LEFT TURN YIELD ON FLASHING YELLOW ARROW					1	1	MAST ARM P-5	10.5 SF
J	REMOVED FROM PLANS									
K	R10-17T	LEFT TURN YIELD ON FLASHING YELLOW ARROW					1	1	MAST ARM P-7	10.5 SF
L	R3-8LK	LANE CONFIGURATION SIGN					1	1	MAST ARM P-7	7.5 SF
M	ILSN	UNIVERSITY AVE					1	1	MAST ARM P-7	1 EA
N	R9-3	NO PEDESTRIANS					1	1	SIGNAL POLE P-7	2.25 SF
O	R10-11	NO TURN ON RED (BALL)					1	1	TY 10BWG(1)SA(P) POST	1 EA

EXIST = EXISTING, REM = REMOVE, REL = RELOCATE, REP = REPLACE, INST = INSTALL



TMUTCD SIGN R10-17T
36"X42"
SIGNS A,E,I,K



TMUTCD SIGN R3-5R
30"X36"
SIGN B

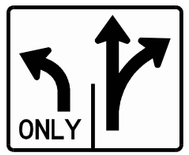

TMUTCD SIGN R3-8LK
36"X30"
SIGNS F,L

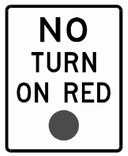

TMUTCD SIGN R10-11
24"X30"
SIGNS G,O



TMUTCD SIGN R9-3
18"X18"
SIGNS D,N

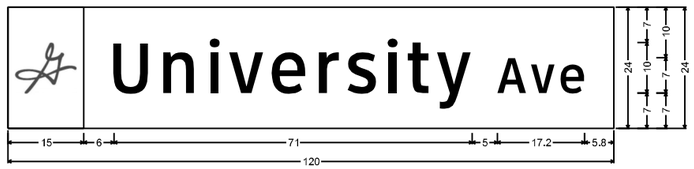

No border, White on Blue;
"University", ClearviewHwy-3-W; "Ave", ClearviewHwy-3-W;
Red logo on White Background

SIGNS H & M

FINAL ILSN DESIGN SHALL BE APPROVED BY THE CITY OF GEORGETOWN PRIOR TO FABRICATION.



Digitally signed by Christopher Pierce
Date: 2026.01.08 11:48:46-06'00'

CHRISTOPHER J. PIERCE, P.E.

LEE ENGINEERING
3030 LBJ FREEWAY, SUITE 1660
DALLAS, TX 75234
972.248.3006
TBPE FIRM #F-450

SH 29 (UNIVERSITY AVE) AT BLUEBONNET PLAZA

PROPOSED TRAFFIC SIGNAL TABLES (5 OF 6)

STATE	CITY	COUNTY	HIGHWAY NO.	SHEET NO.
TEXAS	GEORGETOWN	WILLIAMSON	SH 29	185

APS MESSAGE CHART			
POLE NUMBER	PEDESTRIAN MOVEMENT	FUNCTIONS	SPEECH MESSAGE/SOUND DETAILS
P-2	PHASE 6	BUTTON PUSH ON DON'T WALK	WAIT
		EXTENDED BUTTON PUSH	WAIT TO CROSS **BLUEBONNET PLAZA DRIVEWAY** AT **STATE HIGHWAY 29.**
		LOCATOR TONE	SLOW TICK
		WALK INDICATION *	RAPID TICK
P-3	PHASE 6	BUTTON PUSH ON DON'T WALK	WAIT
		EXTENDED BUTTON PUSH	WAIT TO CROSS **BLUEBONNET PLAZA DRIVEWAY** AT **STATE HIGHWAY 29.**
		LOCATOR TONE	SLOW TICK
		WALK INDICATION *	RAPID TICK
P-4	PHASE 8	BUTTON PUSH ON DON'T WALK	WAIT
		EXTENDED BUTTON PUSH	WAIT TO CROSS **STATE HIGHWAY 29** AT **BLUEBONNET PLAZA DRIVEWAY.**
		LOCATOR TONE	SLOW TICK
		WALK INDICATION *	RAPID TICK
P-5	PHASE 8	BUTTON PUSH ON DON'T WALK	WAIT
		EXTENDED BUTTON PUSH	WAIT TO CROSS **STATE HIGHWAY 29** AT **BLUEBONNET PLAZA DRIVEWAY.**
		LOCATOR TONE	SLOW TICK
		WALK INDICATION *	RAPID TICK
P-6	PHASE 2	BUTTON PUSH ON DON'T WALK	WAIT
		EXTENDED BUTTON PUSH	WAIT TO CROSS **DRIVEWAY** AT **STATE HIGHWAY 29.**
		LOCATOR TONE	SLOW TICK
		WALK INDICATION *	RAPID TICK
P-7	PHASE 2	BUTTON PUSH ON DON'T WALK	WAIT
		EXTENDED BUTTON PUSH	WAIT TO CROSS **DRIVEWAY** AT **STATE HIGHWAY 29.**
		LOCATOR TONE	SLOW TICK
		WALK INDICATION *	RAPID TICK

* COUNTDOWN SPEECH MESSAGE = "OFF" FOR ALL UNITS

CONTRACTOR SHALL VERIFY SPEECH MESSAGES WITH THE CITY OF GEORGETOWN PRIOR TO PROGRAMMING.

ITEM 688 - ACCESSIBLE PEDESTRIAN SIGNAL UNITS (APS)	
PED BUTTON PHASE	FURNISH & INSTALL
PHASE 2	2
PHASE 6	2
PHASE 8	2
TOTAL	6

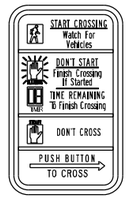

TMUTCD SIGN R10-3ER
9"X15"
MOUNT ON POLES
P-2,P-3,P-4,P-5,P-7

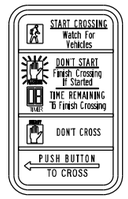

TMUTCD SIGN R10-3EL
9"X15"
MOUNT ON POLE
P-6



Digitally signed by Christopher Pierce
Date: 2025.12.13 19:01:16-06'00'

CHRISTOPHER J. PIERCE, P.E.

LEE ENGINEERING
3030 LBJ FREEWAY, SUITE 1660
DALLAS, TX 75234
972.248.3006
TBPE FIRM #F-450

SH 29 (UNIVERSITY AVE)
AT BLUEBONNET PLAZA

PROPOSED TRAFFIC SIGNAL TABLES (6 OF 6)

STATE	CITY	COUNTY	HIGHWAY NO.	SHEET NO.
TEXAS	GEORGETOWN	WILLIAMSON	SH 29	186

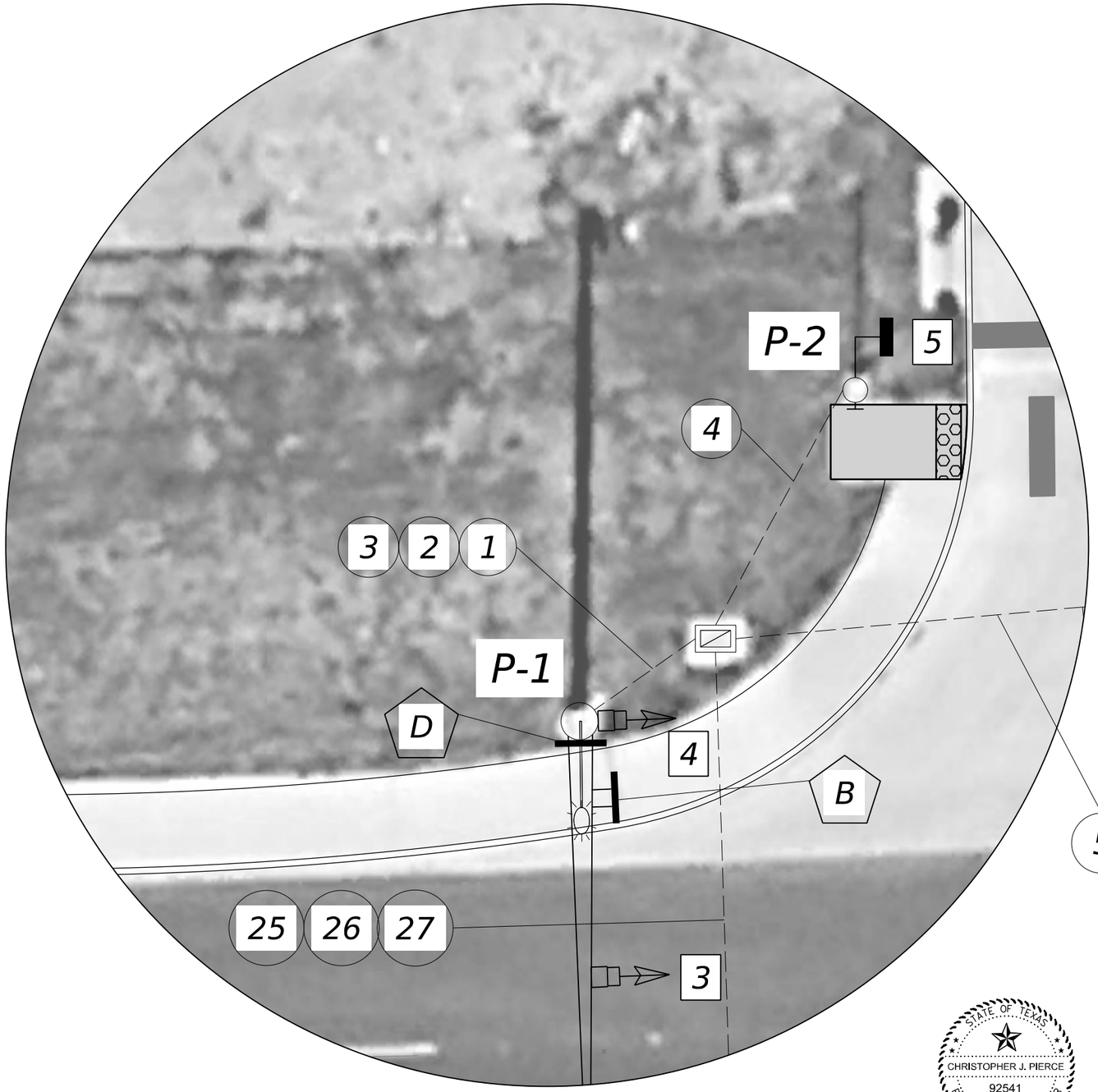

0 5 10

SCALE IN FEET

LEGEND OF SYMBOLS

	SIGNAL POLE ASSEMBLY
3	SIGNAL HEAD NUMBERS
P - 1	POLE NUMBERS
	PEDESTAL POLE ASSEMBLY
	TRAFFIC SIGNAL HEAD
	MAST ARM MOUNTED SIGN
	POST MOUNTED SIGN
X	SIGN DESIGNATION
VIVDS	VIVDS IDENTIFICATION
	VIVDS DETECTOR
Ø6	PHASE NUMBERS
	EXIST. GROUND MOUNTED CONTROLLER CABINET
	EXIST. GROUND BOX
	EXIST. ELECTRICAL SERVICE
	EXIST. LUMINAIRE
2	EXIST. CONDUIT RUN NUMBERS
	CONCRETE SIDEWALK (MAX SLOPE 2%)

STATE OF TEXAS
CHRISTOPHER J. PIERCE
92541
LICENSED PROFESSIONAL ENGINEER

Digitally signed by Christopher Pierce
Date: 2026.01.08 11:49:51-06'00'

CHRISTOPHER J. PIERCE, P.E.

LEE ENGINEERING
3030 LBJ FREEWAY, SUITE 1660
DALLAS, TX 75234
972.248.3006
TBPE FIRM #F-450

SH 29 (UNIVERSITY AVE) AT BLUEBONNET PLAZA

PROPOSED NORTHWEST CORNER LAYOUT

STATE	CITY	COUNTY	HIGHWAY NO.	SHEET NO.
TEXAS	GEORGETOWN	WILLIAMSON	SH 29	187

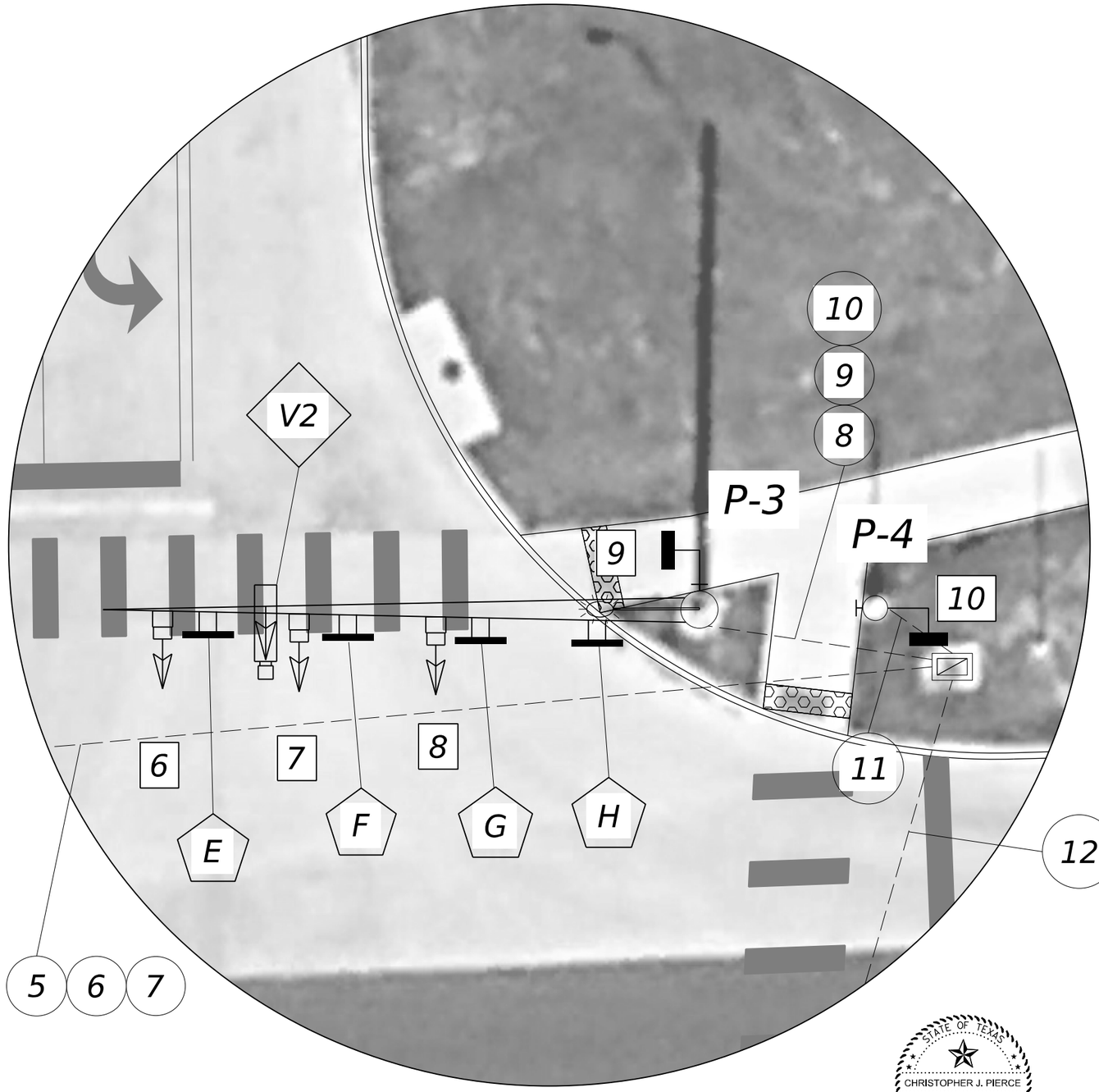

0 5 10

SCALE IN FEET

LEGEND OF SYMBOLS

	SIGNAL POLE ASSEMBLY
3	SIGNAL HEAD NUMBERS
P - 1	POLE NUMBERS
	PEDESTAL POLE ASSEMBLY
	TRAFFIC SIGNAL HEAD
	MAST ARM MOUNTED SIGN
	POST MOUNTED SIGN
X	SIGN DESIGNATION
V	VIVDS IDENTIFICATION
	VIVDS DETECTOR
Ø6	PHASE NUMBERS
	EXIST. GROUND MOUNTED CONTROLLER CABINET
	EXIST. GROUND BOX
	EXIST. ELECTRICAL SERVICE
	EXIST. LUMINAIRE
2	EXIST. CONDUIT RUN NUMBERS
	CONCRETE SIDEWALK (MAX SLOPE 2%)

STATE OF TEXAS
CHRISTOPHER J. PIERCE
92541
LICENSED PROFESSIONAL ENGINEER

Digitally signed by Christopher Pierce
Date: 2025.12.13 19:02:41-06'00'

CHRISTOPHER J. PIERCE, P.E.

LEE ENGINEERING
3030 LBJ FREEWAY, SUITE 1660
DALLAS, TX 75234
972.248.3006
TBPE FIRM #F-450

SH 29 (UNIVERSITY AVE) AT BLUEBONNET PLAZA

PROPOSED NORTHEAST CORNER LAYOUT

STATE	CITY	COUNTY	HIGHWAY NO.	SHEET NO.
TEXAS	GEORGETOWN	WILLIAMSON	SH 29	188

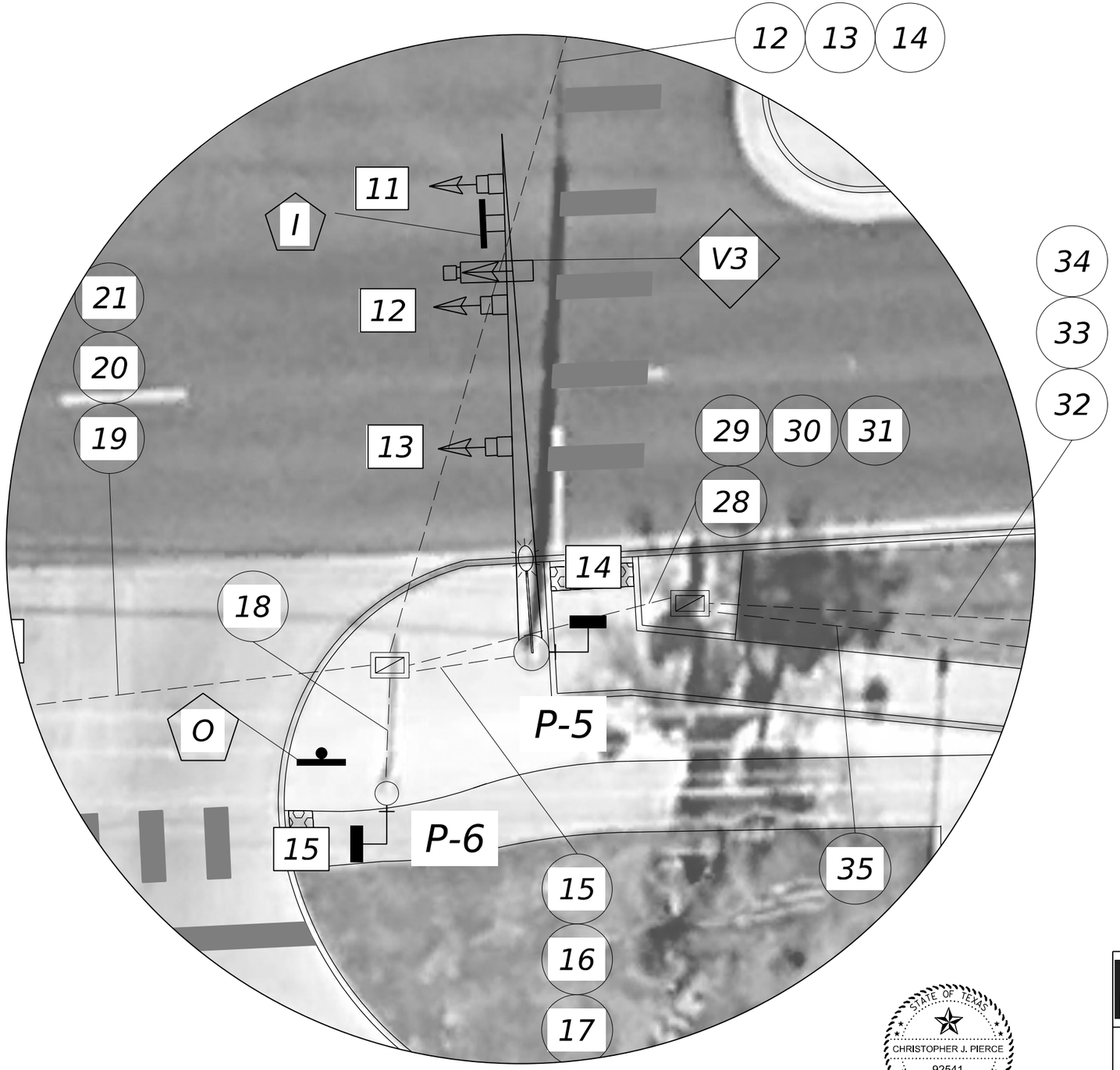

0 5 10

SCALE IN FEET

LEGEND OF SYMBOLS

	SIGNAL POLE ASSEMBLY
3	SIGNAL HEAD NUMBERS
P - 1	POLE NUMBERS
	PEDESTAL POLE ASSEMBLY
	TRAFFIC SIGNAL HEAD
	MAST ARM MOUNTED SIGN
	POST MOUNTED SIGN
X	SIGN DESIGNATION
V3	VIVDS IDENTIFICATION
	VIVDS DETECTOR
Ø6	PHASE NUMBERS
	EXIST. GROUND MOUNTED CONTROLLER CABINET
	EXIST. GROUND BOX
	EXIST. ELECTRICAL SERVICE
	EXIST. LUMINAIRE
2	EXIST. CONDUIT RUN NUMBERS
	CONCRETE SIDEWALK (MAX SLOPE 2%)

STATE OF TEXAS
CHRISTOPHER J. PIERCE
92541
LICENSED PROFESSIONAL ENGINEER

Digitally signed by Christopher Pierce
Date: 2026.01.08 11:51:15-06'00'

CHRISTOPHER J. PIERCE, P.E.

LEE ENGINEERING
3030 LBJ FREEWAY, SUITE 1660
DALLAS, TX 75234
972.248.3006
TBPE FIRM #F-450

SH 29 (UNIVERSITY AVE) AT BLUEBONNET PLAZA

PROPOSED SOUTHEAST CORNER LAYOUT

STATE	CITY	COUNTY	HIGHWAY NO.	SHEET NO.
TEXAS	GEORGETOWN	WILLIAMSON	SH 29	189

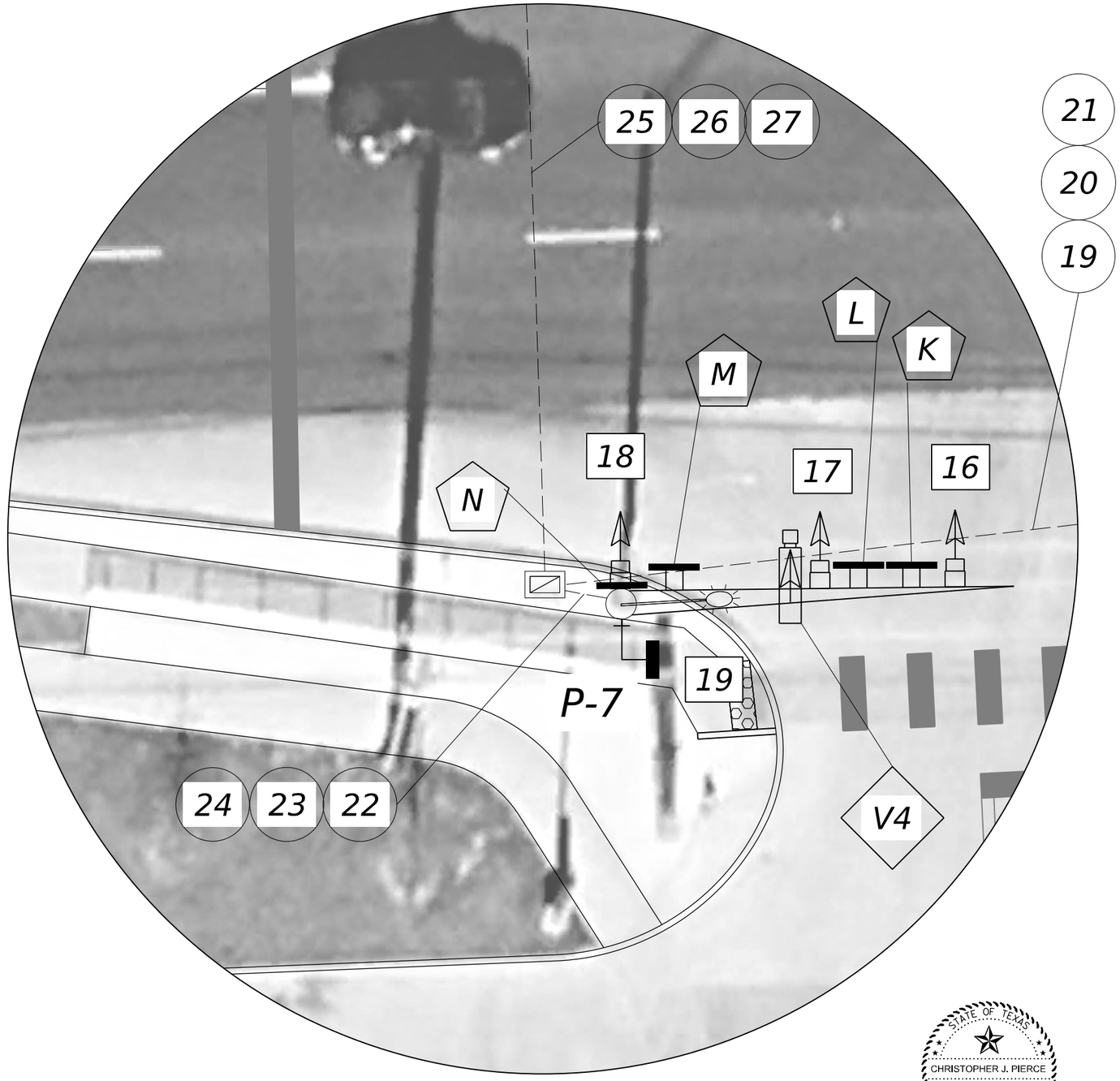

0 5 10

SCALE IN FEET

LEGEND OF SYMBOLS

	SIGNAL POLE ASSEMBLY
3	SIGNAL HEAD NUMBERS
P - 1	POLE NUMBERS
	PEDESTAL POLE ASSEMBLY
	TRAFFIC SIGNAL HEAD
	MAST ARM MOUNTED SIGN
	POST MOUNTED SIGN
X	SIGN DESIGNATION
V	VIVDS IDENTIFICATION
	VIVDS DETECTOR
Ø6	PHASE NUMBERS
	EXIST. GROUND MOUNTED CONTROLLER CABINET
	EXIST. GROUND BOX
	EXIST. ELECTRICAL SERVICE
	EXIST. LUMINAIRE
2	EXIST. CONDUIT RUN NUMBERS
	CONCRETE SIDEWALK (MAX SLOPE 2%)

STATE OF TEXAS
CHRISTOPHER J. PIERCE
92541
LICENSED PROFESSIONAL ENGINEER

Digitally signed by Christopher Pierce
Date: 2025.12.13 19:04:19-06'00'

CHRISTOPHER J. PIERCE, P.E.

LEE ENGINEERING
3030 LBJ FREEWAY, SUITE 1660
DALLAS, TX 75234
972.248.3006
TBPE FIRM #F-450

SH 29 (UNIVERSITY AVE) AT BLUEBONNET PLAZA

PROPOSED SOUTHWEST CORNER LAYOUT

STATE	CITY	COUNTY	HIGHWAY NO.	SHEET NO.
TEXAS	GEORGETOWN	WILLIAMSON	SH 29	190

PAVEMENT MARKING SUMMARY					
ID	TXDOT SPEC NO.	TXDOT DESC. CODE	DESCRIPTION	UNIT	QTY
A	666	7036	REFL PAV MRK TY I (W)24"(SLD)(100 MIL)	LF	365
	666	7352	PAVEMENT SLER 24"	LF	365
	678	7008	PAV SURF PREP FOR MRK (24")	LF	365
B	666	7024	REFL PAV MRK TY I (W)8"(SLD)(100 MIL)	LF	104
	666	7348	PAVEMENT SLER 8"	LF	104
	678	7004	PAV SURF PREP FOR MRK (8")	LF	104
C	666	7423	REFL PAV MRK TY I (Y)6"(SLD) (100 MIL)	LF	162
	666	7347	PAVEMENT SLER 6"	LF	162
	678	7002	PAV SURF PREP FOR MRK (6")	LF	162
D	666	7042	REFL PAV MRK TY I (W)(ARROW)(100 MIL)	EA	2
	666	7353	PAVEMENT SLER (ARROW)	EA	2
	678	7009	PAV SURF PREP FOR MRK (ARROW)	EA	2
E	666	7066	REFL PAV MRK TY I (W)(WORD)(100 MIL)	EA	1
	666	7354	PAVEMENT SLER (WORD)	EA	1
	678	7016	PAV SURF PREP FOR MRK (WORD)	EA	1

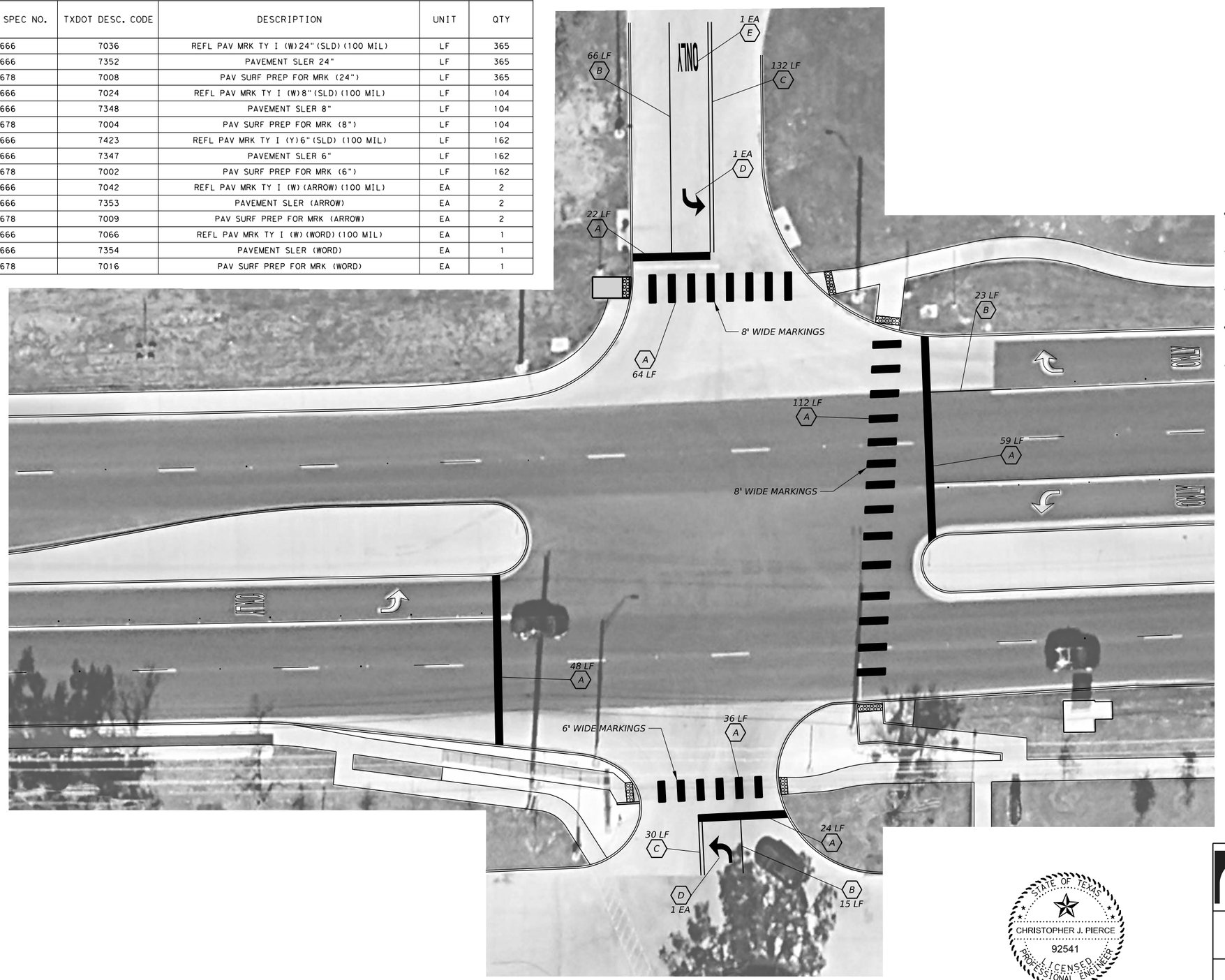

0 10 20 30

SCALE IN FEET

PAVEMENT MARKING LEGEND

- A — REFL PAV MRK TY I (W) 24" (SLD) (100 MIL) & PAVEMENT SLER
- B — REFL PAV MRK TY I (W) 8" (SLD) (100 MIL) & PAVEMENT SLER
- C — REFL PAV MRK TY I (Y) 6" (SLD) (100 MIL) & PAVEMENT SLER (DOUBLE YELLOW)
- D — REFL PAV MRK TY I (W) (ARROW) (100 MIL) & PAVEMENT SLER
- E — REFL PAV MRK TY I (W) (WORD) (100 MIL) & PAVEMENT SLER

STATE OF TEXAS
CHRISTOPHER J. PIERCE
92541
LICENSED PROFESSIONAL ENGINEER

Digitally signed by Christopher Pierce
Date: 2025.12.13 19:05:12-06'00'

CHRISTOPHER J. PIERCE, P.E.

LEE ENGINEERING
3030 LBJ FREEWAY, SUITE 1660
DALLAS, TX 75234
972.248.3006
TBPE FIRM #F-450

SH 29 (UNIVERSITY AVE) AT BLUEBONNET PLAZA

PROPOSED PAVEMENT MARKING LAYOUT

STATE	CITY	COUNTY	HIGHWAY NO.	SHEET NO.
TEXAS	GEORGETOWN	WILLIAMSON	SH 29	191

BARRIER FREE CURB RAMP & SIDEWALK SUMMARY					
ID	TXDOT SPEC NO.	TXDOT DESC. CODE	DESCRIPTION	UNIT	QTY
A	531	7010	CURB RAMPS (TY 7)	EA	1
B	529	7002	CONC CURB (TY II)	LF	10



0 10 20 30
SCALE IN FEET

CURB RAMP AND SIDEWALK LEGEND

A TXDOT TYPE 7 RAMP

B TXDOT CONCRETE CURB (TY II)

NOTE:

CONTRACTOR SHALL INSTALL TY II CONCRETE CURB IN THE SOUTHWEST CORNER OF THE INTERSECTION. NEW CONCRETE CURB SHALL BE DOWELED INTO THE EXISTING CONCRETE SIDEWALK PROVIDING A BARRIER BETWEEN THE EXISTING RAMP AND CONCRETE SLOPE TO THE SOUTH OF THE RAMP

STATE OF TEXAS
CHRISTOPHER J. PIERCE
92541
LICENSED PROFESSIONAL ENGINEER

Digitally signed by Christopher Pierce
Date: 2025.12.13 19:06:25-06'00'

CHRISTOPHER J. PIERCE, P.E.

LEE ENGINEERING
3030 LBJ FREEWAY, SUITE 1660
DALLAS, TX 75234
972.248.3006
TBPE FIRM #F-450

SH 29 (UNIVERSITY AVE) AT BLUEBONNET PLAZA

PROPOSED CURB RAMP AND SIDEWALK LAYOUT

STATE	CITY	COUNTY	HIGHWAY NO.	SHEET NO.
TEXAS	GEORGETOWN	WILLIAMSON	SH 29	192

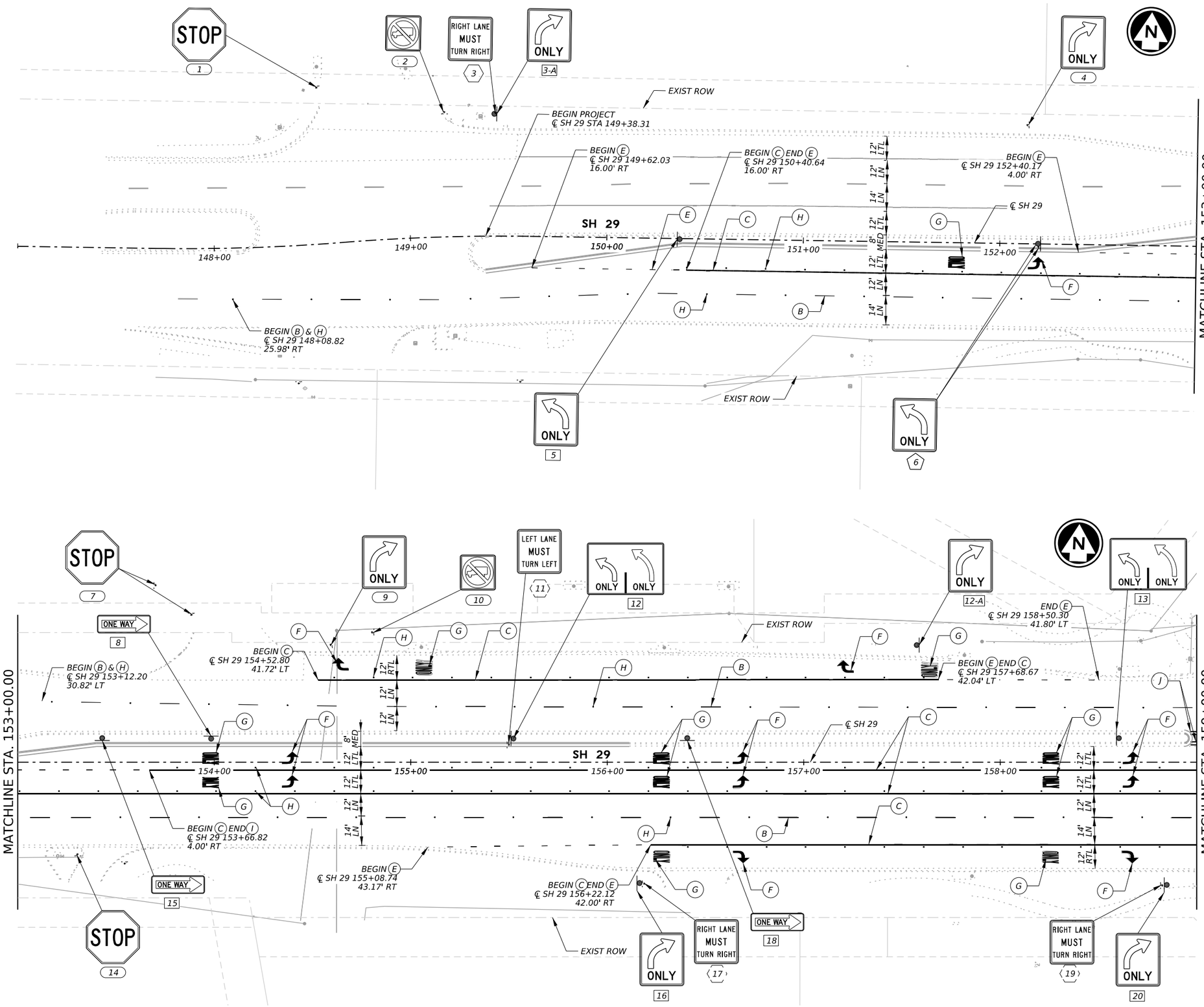

1/5/2026

STATE OF TEXAS
TYLER G. MITCHELL
139240
LICENSED PROFESSIONAL ENGINEER

GEORGETOWN TEXAS
more than welcome

Kimley»Horn F-928

Texas Department of Transportation

SH 29

SIGNING AND PAVEMENT MARKINGS BEGIN TO STA 159+00

SHEET 1 OF 5

CONT	SECT	JOB	HIGHWAY
0337	01	053	SH 29
DIST	COUNTY		SHEET NO.
AUS	WILLIAMSON		193

DATE: 1/5/2026 11:11:42 AM
FILE: pw://kh-pw.bentley.com:kh-pw-01/Documents/01 Active Projects/TX-GEO-069284005 - SH 29 Widening/4 - Design/Plan Set/8. Traffic/SH29_K_SPMD_01

DW: CK: DW: CK:

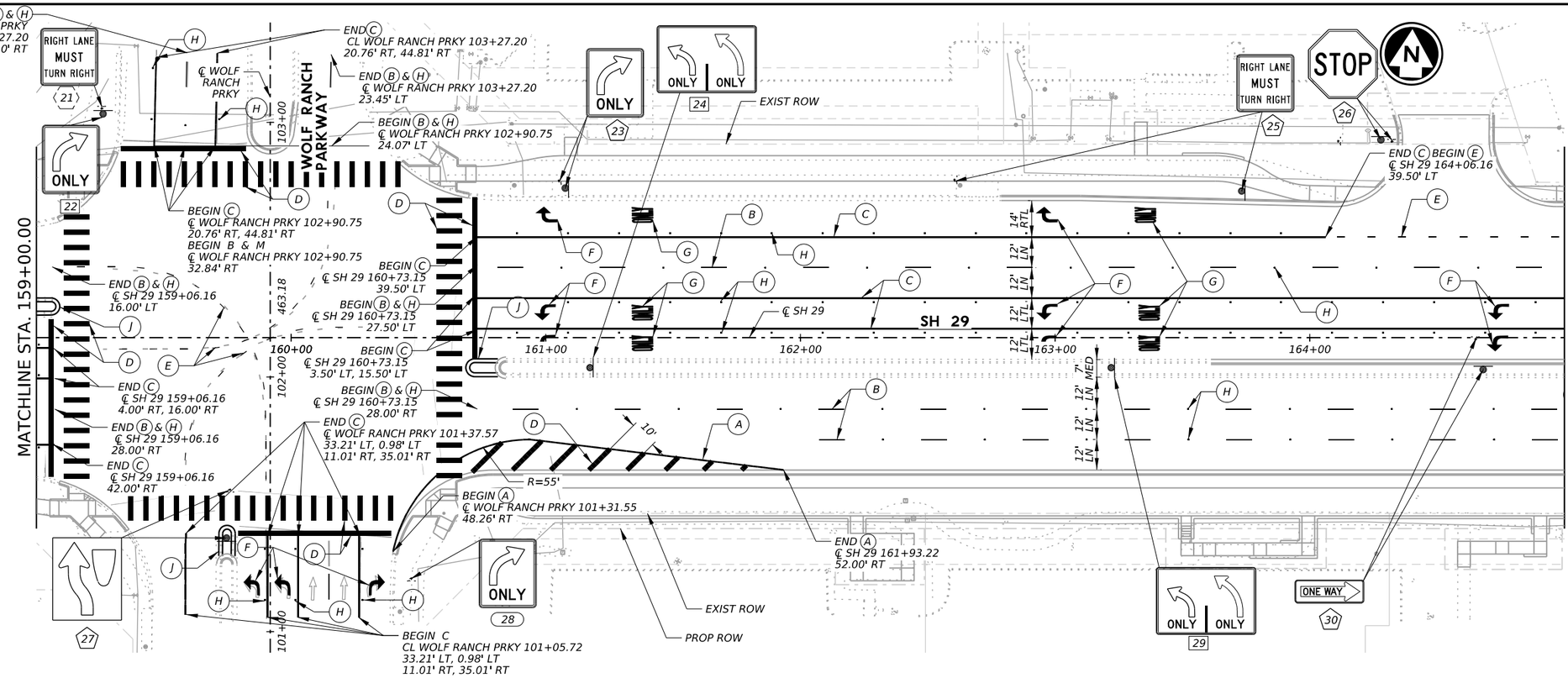

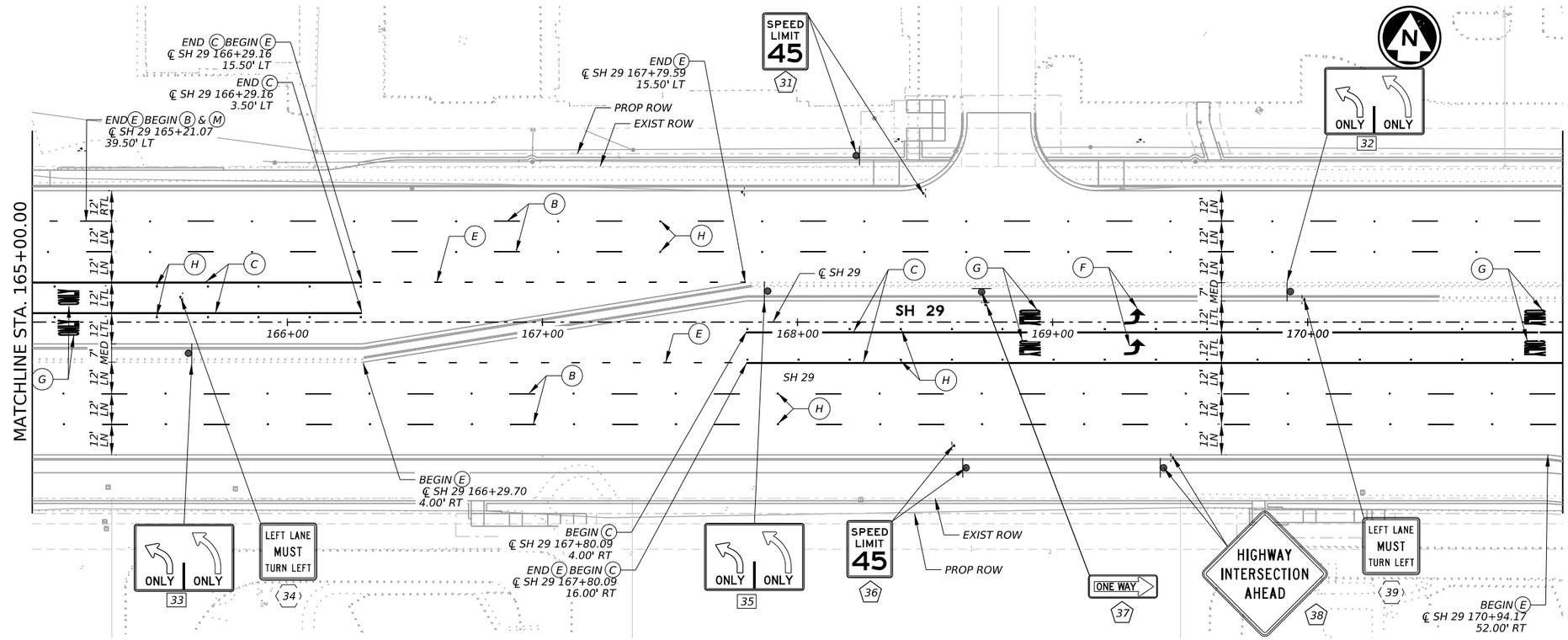

LEGEND

(A)	REFL PAV MRK TY I & II (W) 6" (SLD)
(B)	REFL PAV MRK TY I & II (W) 6" (BRK)
(C)	REFL PAV MRK TY I & II (W) 8" (SLD)
(D)	REFL PAV MRK TY I & II (W) 24" (SLD)
(E)	REFL PAV MRK TY I & II (W) 8" (DOT)
(F)	REFL PAV MRK TY I & II (W) (ARROW)
(G)	REFL PAV MRK TY I & II (W) (WORD)
(H)	REFL PAV MRKR TY II-C-R
(I)	PREFAB PAV MRK TY B (W)(6")(BRK) CONTRAST LANE LINE DESIGN
(J)	REFL PAV MRK TY I & II (Y) 6" (SLD)
(K)	REFL PAV MRK TY I & II (Y) 6" (CURB)
(L)	REFL PAV MRKR TY II-A-A
(M)	REFL PAV MRK TY I & II (W) 24" (SLD) CONTRAST CROSSWALK & STOP BAR DESIGN
(N)	REFL PAV MRK TY I & II (W) 8" (SLD) CONTRAST LANE LINE DESIGN
(XX)	EXIST SIGN TO REMAIN
⬡ XX	EXIST SIGN TO BE REMOVED
⬡ XX	EXIST SIGN TO BE RELOCATED
[XX]	PROPOSED SIGN
	EXISTING SIGN
	PROPOSED SIGN

0′ 25′ 50′ HORZ

NOTES:

1. DIMENSIONS AND OFFSETS ARE TO EDGE OF PAVEMENT UNLESS NOTED OTHERWISE.
2. EXISTING STREET NAME SIGNS TO BE REUSED.
3. CONTRACTOR TO PLACE TYPE II PAVEMENT MARKINGS AND THEN TYPE I ON FINAL SURFACE.
4. SEE BLUEBONNET PLAZA PROPOSED PAVEMENT MARKING LAYOUTS FOR MORE INFORMATION.

STATE OF TEXAS
TYLER G. MITCHELL
139240
LICENSED PROFESSIONAL ENGINEER
12/18/2025

GEORGETOWN TEXAS
more than welcome

Kimley»Horn F-928

Texas Department of Transportation

SH 29

SIGNING AND PAVEMENT MARKINGS STA 159+00 TO STA 171+00

SHEET 2 OF 5

CONT	SECT	JOB	HIGHWAY
0337	01	053	SH 29
DIST	COUNTY		SHEET NO.
AUS	WILLIAMSON		194

DATE: 12/18/2025 2:37:34 PM
FILE: pw://kh-pw.bentley.com:kh-pw-01/Documents/01 Active Projects/TX-GEO-069284005 - SH 29 Widening/4 - Design/Plan Set/8. Traffic/SH29_K_SPMD_02

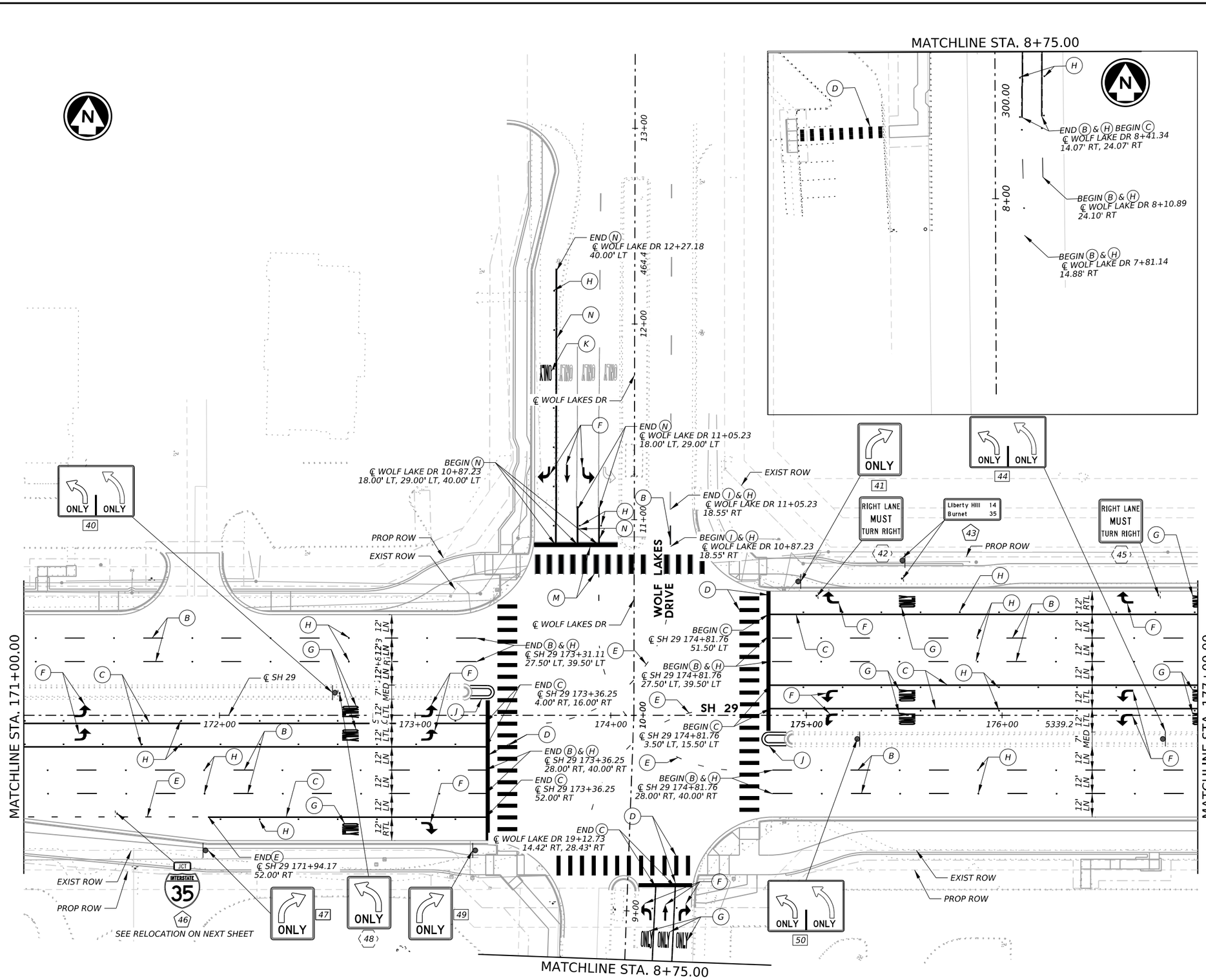

LEGEND

- (A) REFL PAV MRK TY I & II (W) 6" (SLD)
- (B) REFL PAV MRK TY I & II (W) 6" (BRK)
- (C) REFL PAV MRK TY I & II (W) 8" (SLD)
- (D) REFL PAV MRK TY I & II (W) 24" (SLD)
- (E) REFL PAV MRK TY I & II (W) 8" (DOT)
- (F) REFL PAV MRK TY I & II (W) (ARROW)
- (G) REFL PAV MRK TY I & II (W) (WORD)
- (H) REFL PAV MRKR TY II-C-R
- (I) PREFAB PAV MRK TY B (W)(6")(BRK) CONTRAST LANE LINE DESIGN
- (J) REFL PAV MRK TY I & II (Y) 6" (SLD)
- (K) REFL PAV MRK TY I & II (Y) 6" (CURB)
- (L) REFL PAV MRKR TY II-A-A
- (M) REFL PAV MRK TY I & II (W) 24" (SLD) CONTRAST CROSSWALK & STOP BAR DESIGN
- (N) REFL PAV MRK TY I & II (W) 8" (SLD) CONTRAST LANE LINE DESIGN

(XX) EXIST SIGN TO REMAIN

⬡ XX EXIST SIGN TO BE REMOVED

⬡ XX EXIST SIGN TO BE RELOCATED

[XX] PROPOSED SIGN

EXISTING SIGN

PROPOSED SIGN

0′ 25′ 50′ HORZ

NOTES:

1. DIMENSIONS AND OFFSETS ARE TO EDGE OF PAVEMENT UNLESS NOTED OTHERWISE.
2. EXISTING STREET NAME SIGNS TO BE REUSED.
3. CONTRACTOR TO PLACE TYPE II PAVEMENT MARKINGS AND THEN TYPE I ON FINAL SURFACE.
4. SEE BLUEBONNET PLAZA PROPOSED PAVEMENT MARKING LAYOUTS FOR MORE INFORMATION.

12/18/2025

STATE OF TEXAS
TYLER G. MITCHELL
139240
LICENSED PROFESSIONAL ENGINEER

GEORGETOWN TEXAS
more than welcome

Kimley»Horn F-928

Texas Department of Transportation

SH 29

SIGNING AND PAVEMENT MARKINGS
STA 171+00 TO STA 177+00

SHEET 3 OF 5

CONT	SECT	JOB	HIGHWAY
0337	01	053	SH 29
DIST	COUNTY		SHEET NO.
AUS	WILLIAMSON		195

DATE: 12/18/2025 2:37:53 PM
FILE: pw://kh-pw.bentley.com:kh-pw-01/Documents/01 Active Projects/TX-GEO-069284005 - SH 29 Widening/4 - Design/Plan Set/8. Traffic/SH29_K_SPMD_03

DW: CK: DW: CK:

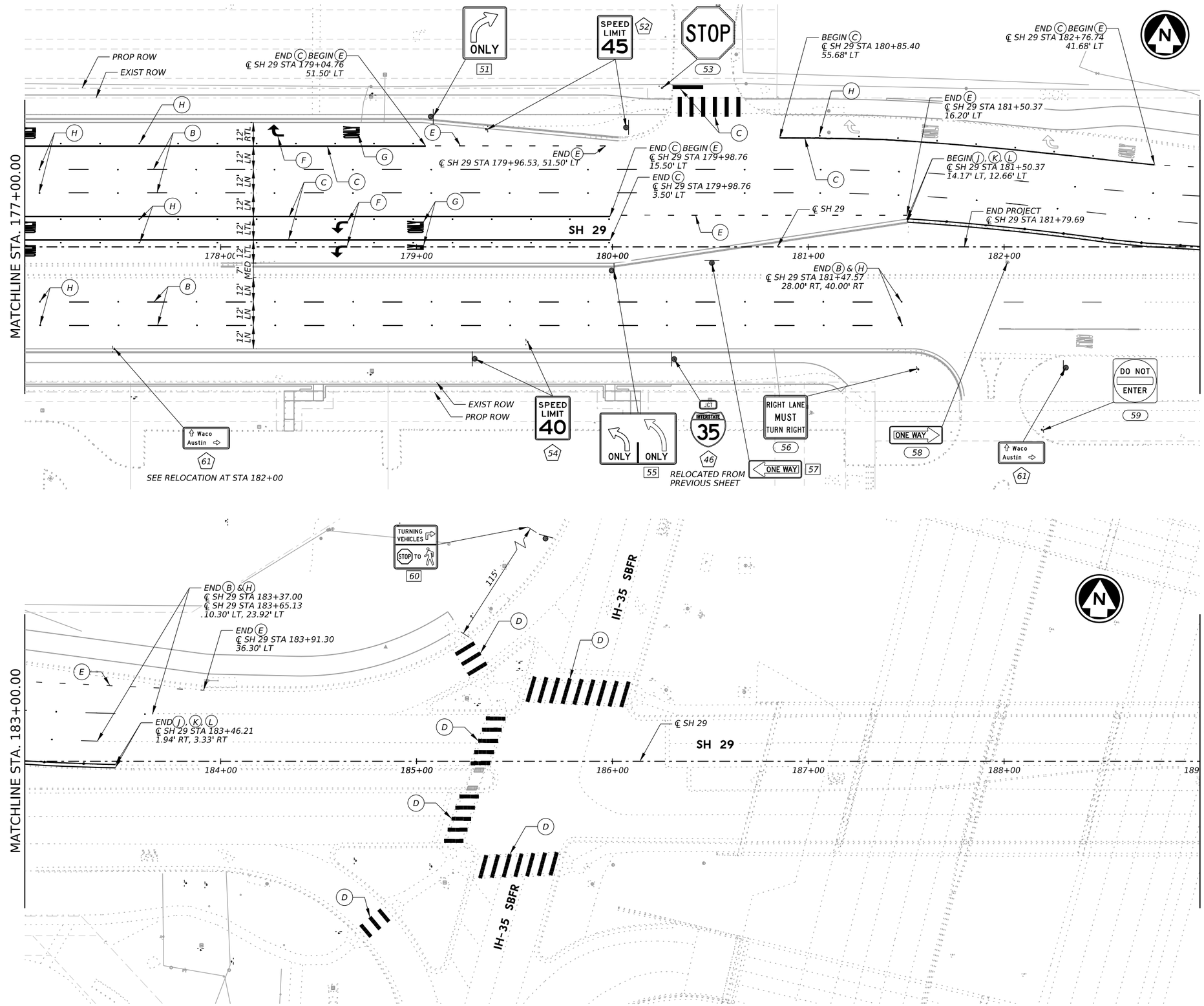

LEGEND

A	REFL PAV MRK TY I & II (W) 6" (SLD)
B	REFL PAV MRK TY I & II (W) 6" (BRK)
C	REFL PAV MRK TY I & II (W) 8" (SLD)
D	REFL PAV MRK TY I & II (W) 24" (SLD)
E	REFL PAV MRK TY I & II (W) 8" (DOT)
F	REFL PAV MRK TY I & II (W) (ARROW)
G	REFL PAV MRK TY I & II (W) (WORD)
H	REFL PAV MRKR TY II-C-R
I	PREFAB PAV MRK TY B (W)(6")(BRK) CONTRAST LANE LINE DESIGN
J	REFL PAV MRK TY I & II (Y) 6" (SLD)
K	REFL PAV MRK TY I & II (Y) 6" (CURB)
L	REFL PAV MRKR TY II-A-A
M	REFL PAV MRK TY I & II (W) 24" (SLD) CONTRAST CROSSWALK & STOP BAR DESIGN
N	REFL PAV MRK TY I & II (W) 8" (SLD) CONTRAST LANE LINE DESIGN
XX	EXIST SIGN TO REMAIN
XX	EXIST SIGN TO BE REMOVED
XX	EXIST SIGN TO BE RELOCATED
XX	PROPOSED SIGN
	EXISTING SIGN
	PROPOSED SIGN

0' 25' 50' HORZ

NOTES:

1. DIMENSIONS AND OFFSETS ARE TO EDGE OF PAVEMENT UNLESS NOTED OTHERWISE.
2. EXISTING STREET NAME SIGNS TO BE REUSED.
3. CONTRACTOR TO PLACE TYPE II PAVEMENT MARKINGS AND THEN TYPE I ON FINAL SURFACE.
4. SEE BLUEBONNET PLAZA PROPOSED PAVEMENT MARKING LAYOUTS FOR MORE INFORMATION.

STATE OF TEXAS
TYLER G. MITCHELL
139240
LICENSED
PROFESSIONAL ENGINEER
12/18/2025

GEORGETOWN TEXAS
more than welcome

Kimley»Horn F-928

Texas Department of Transportation

SH 29

SIGNING AND PAVEMENT MARKINGS STA 177+00 TO STA 189+00

SHEET 4 OF 5

CONT	SECT	JOB	HIGHWAY
0337	01	053	SH 29
DIST	COUNTY		SHEET NO.
AUS	WILLIAMSON		196

CK:
DW:
CK:
DW:

DATE: 12/18/2025 2:38:11 PM
FILE: pw://kh-pw.bentley.com:kh-pw-01/Documents/01 Active Projects/TX-GEO-069284005 - SH 29 Widening/4 - Design/Plan Set/8. Traffic/SH29_K_SPMD_04.dgn

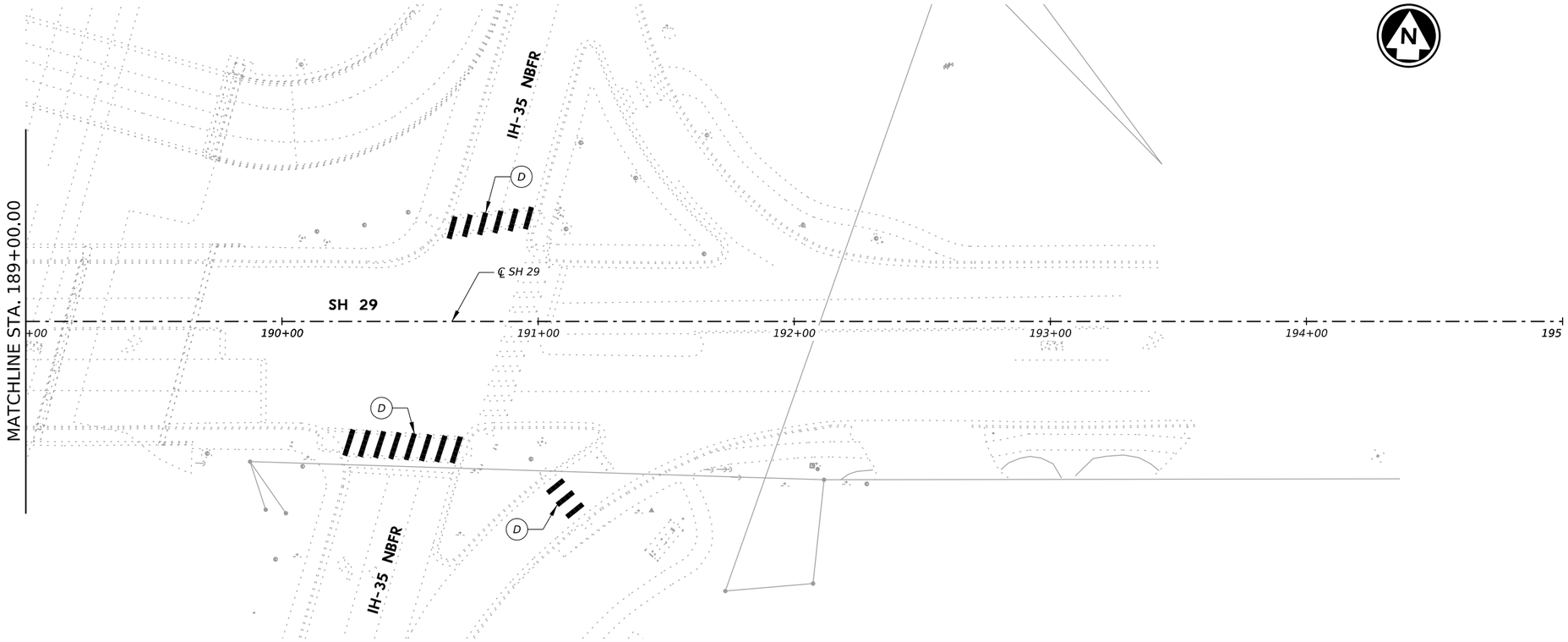

LEGEND

- (A) REFL PAV MRK TY I & II (W) 6" (SLD)
- (B) REFL PAV MRK TY I & II (W) 6" (BRK)
- (C) REFL PAV MRK TY I & II (W) 8" (SLD)
- (D) REFL PAV MRK TY I & II (W) 24" (SLD)
- (E) REFL PAV MRK TY I & II (W) 8" (DOT)
- (F) REFL PAV MRK TY I & II (W) (ARROW)
- (G) REFL PAV MRK TY I & II (W) (WORD)
- (H) REFL PAV MRKR TY II-C-R
- (I) PREFAB PAV MRK TY B (W)(6")(BRK) CONTRAST LANE LINE DESIGN
- (J) REFL PAV MRK TY I & II (Y) 6" (SLD)
- (K) REFL PAV MRK TY I & II (Y) 6" (CURB)
- (L) REFL PAV MRKR TY II-A-A
- (M) REFL PAV MRK TY I & II (W) 24" (SLD) CONTRAST CROSSWALK & STOP BAR DESIGN
- (N) REFL PAV MRK TY I & II (W) 8" (SLD) CONTRAST LANE LINE DESIGN
- (XX) EXIST SIGN TO REMAIN
- XX EXIST SIGN TO BE REMOVED
- XX EXIST SIGN TO BE RELOCATED
- [XX] PROPOSED SIGN
- EXISTING SIGN
- PROPOSED SIGN

0′ 25′ 50′ HORZ

NOTES:

1. DIMENSIONS AND OFFSETS ARE TO EDGE OF PAVEMENT UNLESS NOTED OTHERWISE.
2. EXISTING STREET NAME SIGNS TO BE REUSED.
3. CONTRACTOR TO PLACE TYPE II PAVEMENT MARKINGS AND THEN TYPE I ON FINAL SURFACE.
4. SEE BLUEBONNET PLAZA PROPOSED PAVEMENT MARKING LAYOUTS FOR MORE INFORMATION.

STATE OF TEXAS
TYLER G. MITCHELL
139240
LICENSED PROFESSIONAL ENGINEER
12/18/2025

GEORGETOWN TEXAS
more than welcome

Kimley»Horn F-928

Texas Department of Transportation

SH 29

SIGNING AND PAVEMENT MARKING STA 189+00 TO END

SHEET 5 OF 5

CONT	SECT	JOB	HIGHWAY
0337	01	053	SH 29
DIST	COUNTY		SHEET NO.
AUS	WILLIAMSON		197

DATE: 12/18/2025 2:38:29 PM
FILE: pw://kh-pw.bentley.com:kh-pw-01/Documents/01 Active Projects/TX-GEO-069284005 - SH 29 Widening/4 - Design/Plan Set/8. Traffic/SH29_K_SPMD_05.dgn

DISCLAIMER: The use of this standard is governed by the "Texas Engineering Practice Act". No warranty of any kind is made by TxDOT for any purpose whatever. TxDOT assumes no responsibility for the conversion of this Standard to other formats or incorrect results or damages resulting from its use.

DATE: 9/24/2025 6:35:04 PM
FILE: pw://kh-pw.bentley.com:kh-pw-01/Documents/01 Active Projects/TX-GEO-069284005 - SH 29 Widening/4 - Design/Plan Set/8. Traffic/STANDARDS/sma-80.dgn

Arm Length	ROUND POLES					POLYGONAL POLES					Foundation Type
	D_B	D_{19}	D_{24}	D_{30}	① thk	D_B	D_{19}	D_{24}	D_{30}	① thk	
ft.	in.	in.	in.	in.	in.	in.	in.	in.	in.	in.	
20	10.5	7.8	7.1	6.3	.179	11.5	8.5	7.7	6.8	.179	30-A
24	11.0	8.3	7.6	6.8	.179	12.0	9.0	8.2	7.3	.179	30-A
28	11.5	8.8	8.1	7.3	.179	12.5	9.5	8.7	7.8	.179	30-A
32	12.5	9.8	9.1	8.3	.179	12.0	9.0	8.2	7.3	.239	30-A
36	12.0	9.3	8.6	7.8	.239	12.5	9.5	8.7	7.8	.239	36-A
40	12.0	9.3	8.6	7.8	.239	13.5	10.5	9.7	8.8	.239	36-A
44	12.5	9.8	9.1	8.3	.239	14.0	11.0	10.2	9.3	.239	36-A
48	13.0	10.3	9.6	8.8	.239	15.0	12.0	11.2	10.3	.239	36-A

Arm Length	ROUND ARMS					POLYGONAL ARMS				
	L_1	D_1	D_2	① thk	Rise	L_1	D_1	② D_2	① thk	Rise
ft.	ft.	in.	in.	in.		ft.	in.	in.	in.	
20	19.1	6.5	3.8	.179	1′-9"	19.1	7.0	3.5	.179	1′-8"
24	23.1	7.5	4.3	.179	1′-10"	23.1	7.5	3.5	.179	1′-9"
28	27.1	8.0	4.2	.179	1′-11"	27.1	8.0	3.5	.179	1′-10"
32	31.0	9.0	4.7	.179	2′-1"	31.0	9.0	3.5	.179	2′-0"
36	35.0	9.5	4.6	.179	2′-4"	35.0	10.0	3.5	.179	2′-1"
40	39.0	9.5	4.1	.239	2′-8"	39.0	9.5	3.5	.239	2′-3"
44	43.0	10.0	4.1	.239	2′-11"	43.0	10.0	3.5	.239	2′-6"
48	47.0	10.5	4.1	.239	3′-4"	47.0	11.0	3.5	.239	2′-9"

D_B = Pole Base O.D.
D_{19} = Pole Top O.D. with no Luminaire and no ILSN
D_{24} = Pole Top O.D. with ILSN w/out Luminaire
D_{30} = Pole Top O.D. with Luminaire
D_1 = Arm Base O.D.
D_2 = Arm End O.D.
L_1 = Shaft Length
L = Nominal Arm Length

① Thickness shown are minimums, thicker materials may be used.

② D_2 may be increased by up to 1" for polygonal arms.

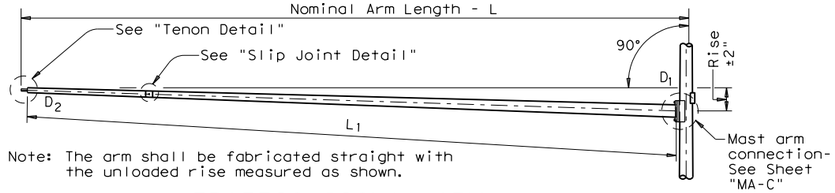

Note: The arm shall be fabricated straight with the unloaded rise measured as shown.

TRAFFIC SIGNAL ARM

(Fixed Mount)

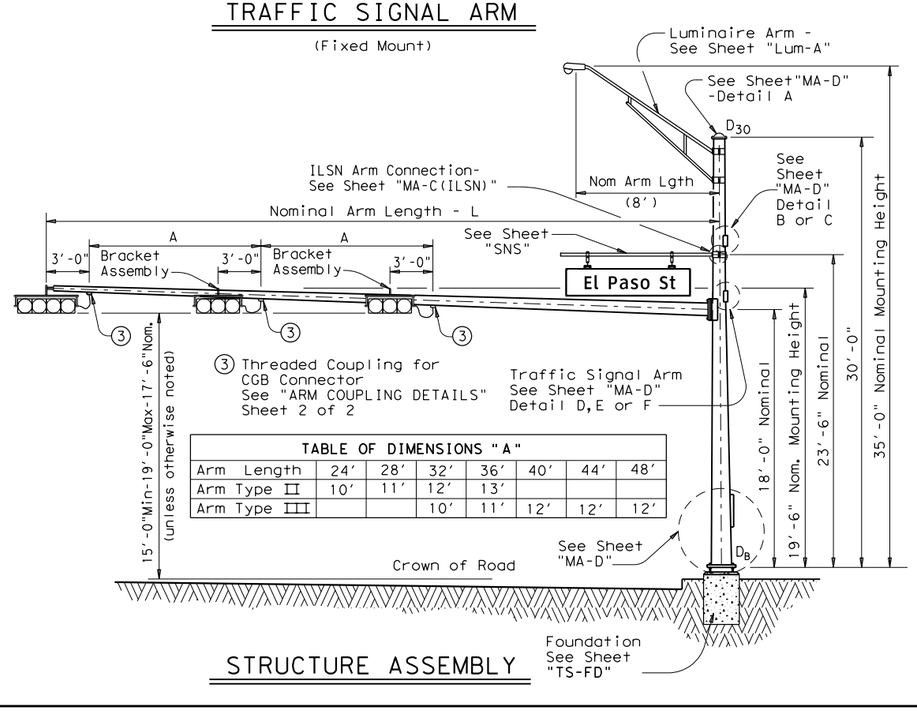

TABLE OF DIMENSIONS "A"

Arm Length	24′	28′	32′	36′	40′	44′	48′
Arm Type II	10′	11′	12′	13′			
Arm Type III			10′	11′	12′	12′	12′

STRUCTURE ASSEMBLY

SHIPPING PARTS LIST

Ship each pole with the following attached: enlarged hand hole, pole cap, fixed-arm connection bolts and washers and any additional hardware listed in the table.

Nominal Arm Length	30′ Poles With Luminaire		24′ Poles With ILSN		19′ Poles With No Luminaire and No ILSN	
	Above hardware plus: One (or two if ILSN attached) small hand hole, clamp-on simplex		Above hardware plus one small hand hole		See note above	
ft	Designation	Quantity	Designation	Quantity	Designation	Quantity
20	20L-80		20S-80		20-80	
24	24L-80		24S-80		24-80	
28	28L-80		28S-80		28-80	
32	32L-80		32S-80		32-80	
36	36L-80		36S-80		36-80	
40	40L-80		40S-80		40-80	
44	44L-80	1	44S-80		44-80	
48	48L-80		48S-80		48-80	

Traffic Signal Arms (1 per Pole) Ship each arm with the listed equipment attached

Nominal Arm Length	Type I Arm (1 Signal)		Type II Arm (2 Signals)		Type III Arm (3 Signals)	
	1 CGB connector		1 Bracket Assembly and 2 CGB Connectors		2 Bracket Assemblies and 3 CGB Connectors	
ft	Designation	Quantity	Designation	Quantity	Designation	Quantity
20	20I-80					
24	24I-80		24II-80			
28	28I-80		28II-80			
32			32II-80		32III-80	
36			36II-80		36III-80	
40					40III-80	
44					44III-80	1
48					48III-80	

Luminaire Arms (1 per 30′ pole)

Nominal Arm Length	Quantity
8′ Arm	1

ILSN Arm (Max. 2 per pole) Ship with clamps, bolts and washers

Nominal Arm Length	Quantity
7′ Arm	
9′ Arm	4
11′ Arm	2

Anchor Bolt Assemblies (1 per pole)

Anchor Bolt Diameter	Anchor Bolt Length	Quantity
1 ½"	3′-4"	
1 ¾"	3′-10"	1

Each anchor bolt assembly consists of the following: Top and Bottom templates, 4 anchor bolts, 8 nuts, 8 flat washers, and 4 nut anchor devices (Type 2) per Standard Drawing "TS-FD".

Templates may be removed for shipment.

SHEET 1 OF 2

Matthew Gaal
9/24/2025

STATE OF TEXAS
MATTHEW A. GAAL
140753
LICENSED
PROFESSIONAL ENGINEER

Texas Department of Transportation
Traffic Operations Division

TRAFFIC SIGNAL SUPPORT STRUCTURES

SINGLE MAST ARM ASSEMBLY

(80 MPH WIND ZONE)

SMA-80(1)-12

© TxDOT August 1995

DN: MS	CK: JSY	DW: MMF	CK: JSY

REVISIONS
5-96
11-99
1-12

CONT	SECT	JOB	HIGHWAY
0337	01	053	SH 29
DIST	COUNTY		SHEET NO.
AUS	WILLIAMSON		198

122A

DISCLAIMER: The use of this standard is governed by the "Texas Engineering Practice Act". No warranty of any kind is made by TxDOT for any purpose whatsoever. TxDOT assumes no responsibility for the conversion of this standard to other formats or for incorrect results or damages resulting from its use.

Arm Length	ROUND POLES					POLYGONAL POLES					Foundation Type
	D_B	D_{19}	D_{24}	D_{30}	① thk	D_B	D_{19}	D_{24}	D_{30}	① thk	
ft.	in.	in.	in.	in.	in.	in.	in.	in.	in.	in.	
20	10.5	7.8	7.1	6.3	.179	11.5	8.5	7.7	6.8	.179	30-A
24	11.0	8.3	7.6	6.8	.179	12.0	9.0	8.2	7.3	.179	30-A
28	11.5	8.8	8.1	7.3	.179	12.5	9.5	8.7	7.8	.179	30-A
32	12.5	9.8	9.1	8.3	.179	12.0	9.0	8.2	7.3	.239	30-A
36	12.0	9.3	8.6	7.8	.239	12.5	9.5	8.7	7.8	.239	36-A
40	12.0	9.3	8.6	7.8	.239	13.5	10.5	9.7	8.8	.239	36-A
44	12.5	9.8	9.1	8.3	.239	14.0	11.0	10.2	9.3	.239	36-A
48	13.0	10.3	9.6	8.8	.239	15.0	12.0	11.2	10.3	.239	36-A

Arm Length	ROUND ARMS					POLYGONAL ARMS				
	L_1	D_1	D_2	① thk	Rise	L_1	D_1	② D_2	① thk	Rise
ft.	ft.	in.	in.	in.		ft.	in.	in.	in.	
20	19.1	6.5	3.8	.179	1′-9"	19.1	7.0	3.5	.179	1′-8"
24	23.1	7.5	4.3	.179	1′-10"	23.1	7.5	3.5	.179	1′-9"
28	27.1	8.0	4.2	.179	1′-11"	27.1	8.0	3.5	.179	1′-10"
32	31.0	9.0	4.7	.179	2′-1"	31.0	9.0	3.5	.179	2′-0"
36	35.0	9.5	4.6	.179	2′-4"	35.0	10.0	3.5	.179	2′-1"
40	39.0	9.5	4.1	.239	2′-8"	39.0	9.5	3.5	.239	2′-3"
44	43.0	10.0	4.1	.239	2′-11"	43.0	10.0	3.5	.239	2′-6"
48	47.0	10.5	4.1	.239	3′-4"	47.0	11.0	3.5	.239	2′-9"

D_B = Pole Base O.D.
D_{19} = Pole Top O.D. with no Luminaire and no ILSN
D_{24} = Pole Top O.D. with ILSN w/out Luminaire
D_{30} = Pole Top O.D. with Luminaire
D_1 = Arm Base O.D.
D_2 = Arm End O.D.
L_1 = Shaft Length
L = Nominal Arm Length

① Thickness shown are minimums, thicker materials may be used.

② D_2 may be increased by up to 1" for polygonal arms.

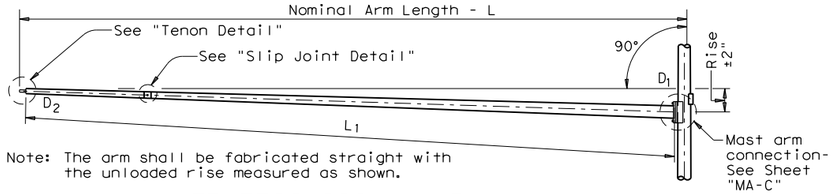

Note: The arm shall be fabricated straight with the unloaded rise measured as shown.

TRAFFIC SIGNAL ARM

(Fixed Mount)

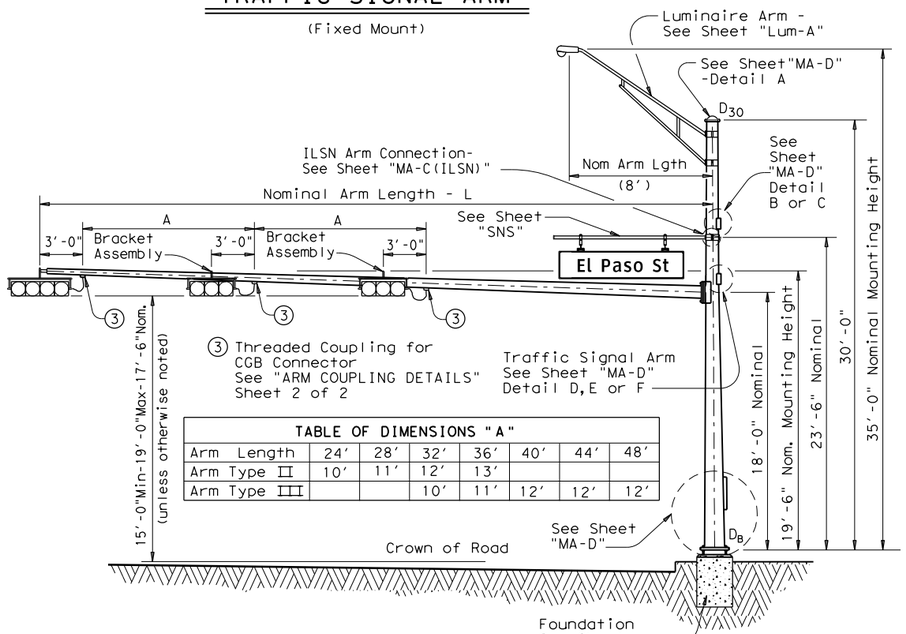

TABLE OF DIMENSIONS "A"

Arm Length	24′	28′	32′	36′	40′	44′	48′
Arm Type II	10′	11′	12′	13′			
Arm Type III			10′	11′	12′	12′	12′

STRUCTURE ASSEMBLY

SHIPPING PARTS LIST

Ship each pole with the following attached: enlarged hand hole, pole cap, fixed-arm connection bolts and washers and any additional hardware listed in the table.

Nominal Arm Length	30′ Poles With Luminaire		24′ Poles With ILSN		19′ Poles With No Luminaire and No ILSN	
	Above hardware plus: One (or two if ILSN attached) small hand hole, clamp-on simplex		Above hardware plus one small hand hole		See note above	
ft	Designation	Quantity	Designation	Quantity	Designation	Quantity
20	20L-80		20S-80		20-80	
24	24L-80		24S-80		24-80	
28	28L-80		28S-80		28-80	
32	32L-80		32S-80		32-80	
36	36L-80		36S-80		36-80	
40	40L-80		40S-80		40-80	
44	44L-80		44S-80		44-80	
48	48L-80		48S-80		48-80	

Traffic Signal Arms (1 per Pole) Ship each arm with the listed equipment attached

Nominal Arm Length	Type I Arm (1 Signal)		Type II Arm (2 Signals)		Type III Arm (3 Signals)	
	1 CGB connector		1 Bracket Assembly and 2 CGB Connectors		2 Bracket Assemblies and 3 CGB Connectors	
ft	Designation	Quantity	Designation	Quantity	Designation	Quantity
20	20I-80		20II-80			
24	24I-80		24II-80			
28	28I-80		28II-80			
32			32II-80	1	32III-80	
36			36II-80		36III-80	
40			40II-80		40III-80	
44			44II-80		44III-80	2
48					48III-80	1

Luminaire Arms (1 per 30′ pole)

Nominal Arm Length	Quantity
8′ Arm	

ILSN Arm (Max. 2 per pole) Ship with clamps, bolts and washers

Nominal Arm Length	Quantity
7′ Arm	
9′ Arm	
11′ Arm	

Anchor Bolt Assemblies (1 per pole)

Anchor Bolt Diameter	Anchor Bolt Length	Quantity
1 ½"	3′-4"	
1 ¾"	3′-10"	

Each anchor bolt assembly consists of the following: Top and Bottom templates, 4 anchor bolts, 8 nuts, 8 flat washers, and 4 nut anchor devices (Type 2) per Standard Drawing "TS-FD".

Templates may be removed for shipment.

THIS SHIPPING PARTS LIST IS FOR MATERIAL TO BE INSTALLED AT THE INTERSECTION OF SH 29 AND BLUBONNET PLAZA ONLY.

Texas Department of Transportation
Traffic Operations Division

TRAFFIC SIGNAL SUPPORT STRUCTURES

SINGLE MAST ARM ASSEMBLY

(80 MPH WIND ZONE)

SMA-80(1)-12

© TxDOT August 1995

DN: MS	CK: JSY	DW: MWF	CK: JSY

REVISIONS
5-96
11-99
1-12

CONT	SECT	JOB	HIGHWAY
			SH 29
DIST	COUNTY		SHEET NO.
AUS	WILLIAMSON		199

DATE: 1011
FILE:

122A

DISCLAIMER: The use of this standard is governed by the "Texas Engineering Practice Act". No warranty of any kind is made by TxDOT for any purpose whatsoever. TxDOT assumes no responsibility for the conversion of this Standard to other formats or for incorrect results or damages resulting from its use.

DATE: 12/18/2025 2:38:50 PM
FILE: pw:/kh-pw.bentley.com:kh-pw-01/Documents/01 Active Projects/TX-GEO-069284005 - SH 29 Widening/4 - Design/Plan Set/8. Traffic/STANDARDS/sma-80.dgn

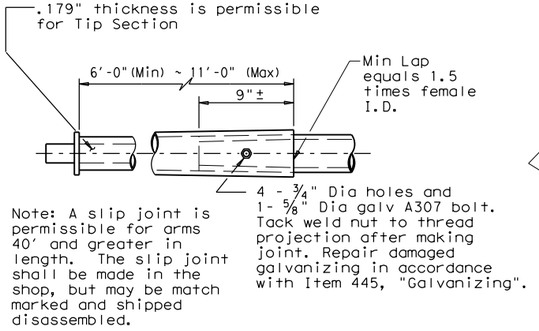

SLIP JOINT DETAIL

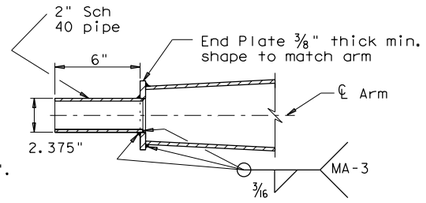

TENON DETAIL

Stainless steel bands (or Cables) and cast bracket as in "Astro-Brac", "Sky Bracket" or "Easy Bracket" with 1 ½" Dia Threaded Coupling.

BRACKET ASSEMBLY

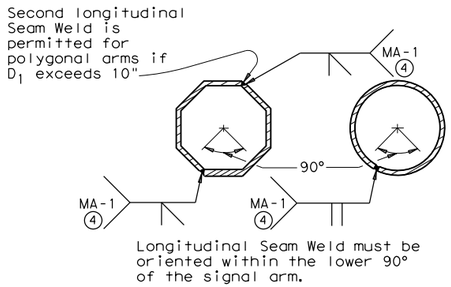

ARM WELD DETAIL

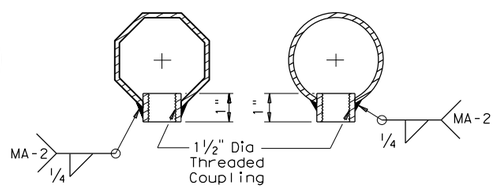

ARM COUPLING DETAILS

④ 60% Min. penetration 100% pemetration within 6" of circumferential base welds.

VIBRATION WARNING

Mast Arms of SMA and DMA structures and clamp-on Arms of LMA structures of approximately 40 ft or longer are subject to harmonic vertical vibrations in light wind conditions due to the aeroelastic characteristics of a few of the myriads of possible combinations of the following: signal numbers, weights and positions; existence/solidity of backplates; presence of additional attachments to the arm, such as signs and cameras; arm-wind orientation; and arm-pole stiffness.

Such vibrations may cause fatigue damage to the structure and may lead to galloping in moderate wind conditions which may further damage the structure and alarm the public. Tests have indicated that when wind is blowing toward the back side of signal heads having un-vented backplates attached the probability of unacceptable harmonic vibration and/or galloping is rather high.

If backplates are not required for improved visibility they should not be applied to the signal heads or, if they must be applied, they should be vented as a first and inexpensive measure to mitigate vibrations.

The traffic signal mast arms shall be visually inspected in 5 to 20 mph wind conditions after installation of signal heads and any attachments, including any required backpates. If vertical movements with a total excursion (maximum upward excursion to maximum downward excursion) of more than approximately 8" are observed at the arm tip, a damping plate shall be fitted to the arm. See "Damping Plate Mounting Details" on standard sheet, MA-DPD-10.

This visual inspection shall be repeated after each modification of the structure that could affect its aeroelastic response. Excessive vibrations shall not be allowed to continue for more than two days.

GENERAL NOTES:

Design conforms to 1994 AASHTO Standard Specifications for Structural Supports for Highway Signs, Luminaires, and Traffic Signals and Interim Specifications thereto. Design Wind Speed equals 80 mph plus a 1.3 gust factor.

Poles are designed to support one 8'-0" luminaire arm, one 9'-0" internally lighted street name sign and one traffic signal arm with a length as tabulated. The specified luminaire load applied at the end of the luminaire arm equals 60 lbs vertical dead load plus the horizontal wind load on an effective projected area of 1.6 sq ft. The specified internally lighted street name sign load applied 4.5 ft from the centerline of the pole equals 85 lbs vertical dead load plus horizontal wind load on an effective projected area of 11.5 sq ft. The specified signal load applied at the end of the traffic signal arm equals 180 lbs vertical dead load plus the horizontal wind load on an effective projected area of 32.4 sq ft (actual area times drag coefficient).

See Standard Sheet "MA-D" for pole details, "MA-C" for traffic signal arm connection details, "MA-C (ILSN)" for internally lighted street name sign arm connection details, "LUM-A" for luminaire arm and connection details, "SNS" for internally lighted street name sign details, and "TS-FD" for anchor bolt and foundation details. See "MA-C" for material specifications.

Fabrication shall be in accordance with Item 686, "Traffic Signal Pole Assemblies (Steel)" and with the details, dimensions, and weld procedures shown herein. Weld references call for preapproved weld procedures which the Fabricator must obtain prior to fabrication. Materials, fabrication tolerances, and shipping practices shall meet the requirements of this sheet and Item 686, "Traffic Signal Pole Assemblies (Steel)".

Unless otherwise noted, all parts shall be galvanized in accordance with Item 445, "Galvanizing", after fabrication.

Deviation from the details and dimensions shown herein require submission of shop drawings in accordance with Item 441, "Steel Structures". Alternate designs are not acceptable.

Texas Department of Transportation
Traffic Operations Division

TRAFFIC SIGNAL SUPPORT STRUCTURES

SINGLE MAST ARM ASSEMBLY

(80 MPH WIND ZONE)

SMA-80(2)-12

© TxDOT August 1995

DN: MS	CK: JSY	DW: MMF	CK: JSY

REVISIONS
5-96
1-12

CONT	SECT	JOB	HIGHWAY
0337	01	053	SH 29
DIST	COUNTY		SHEET NO.
AUS	WILLIAMSON		200

122B

DISCLAIMER: The use of this standard is governed by the "Texas Engineering Practice Act". No warranty of any kind is made by TxDOT for any purpose whatsoever. TxDOT assumes no responsibility for the conversion of this standard to other formats or for incorrect results or damages resulting from its use.

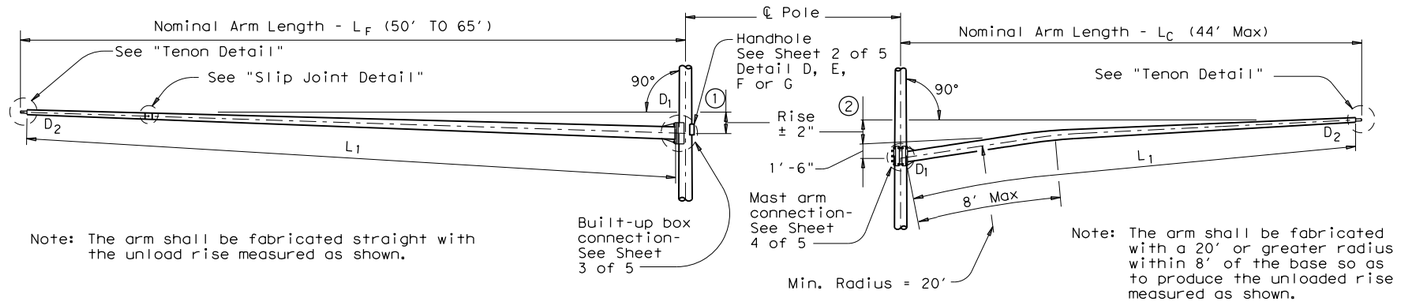

Note: The arm shall be fabricated straight with the unload rise measured as shown.

Note: The arm shall be fabricated with a 20' or greater radius within 8' of the base so as to produce the unloaded rise measured as shown.

FIXED MOUNT TRAFFIC SIGNAL ARM

① See Sheet 3 of 5 for Arm Rise

CLAMP-ON TRAFFIC SIGNAL ARM (IF REQUIRED)

② See Sheet 4 of 5 for Arm Rise and Clamp-on Arm Details

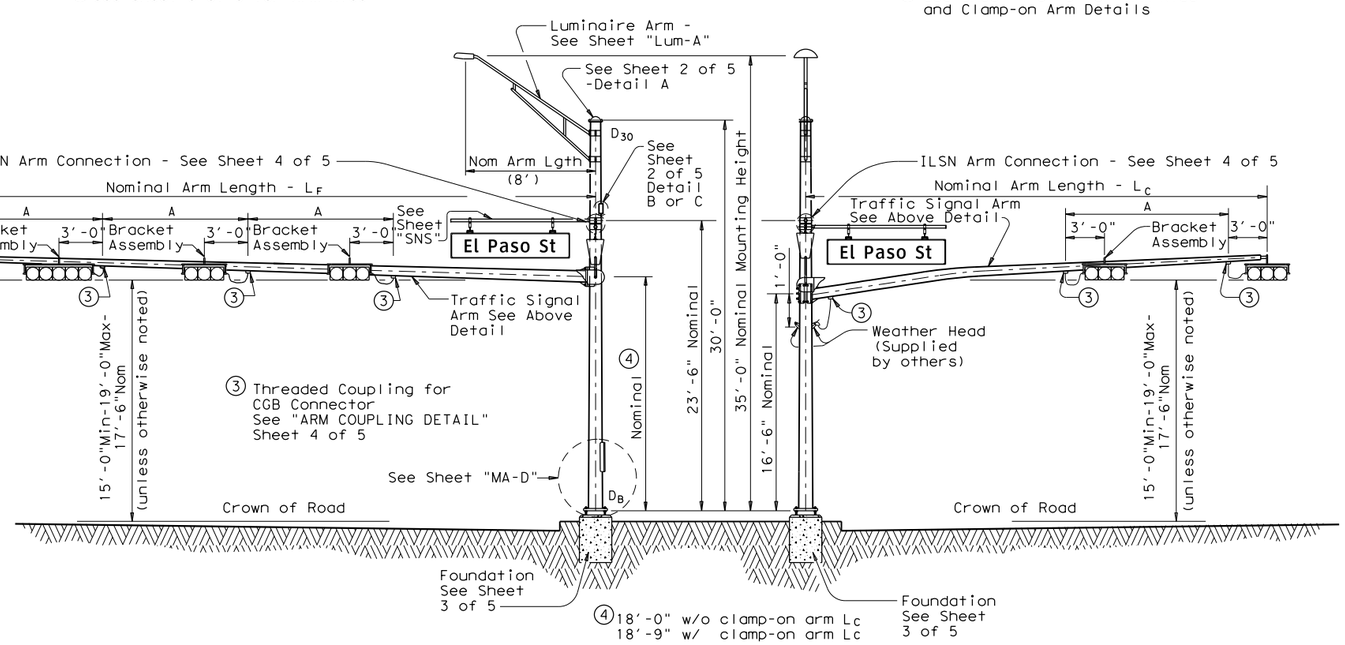

ELEVATION
(Showing fixed mount arm)

STRUCTURE ASSEMBLY

ELEVATION
(Showing clamp-on arm)

TABLE OF DIMENSIONS "A"										
Arm Length	24'	28'	32'	36'	40'	44'	50'	55'	60'	65'
Arm Type II	10'	11'	12'	13'						
Arm Type III			10'	11'	12'	12'				
Arm Type IV							12'	12'	12'	12'

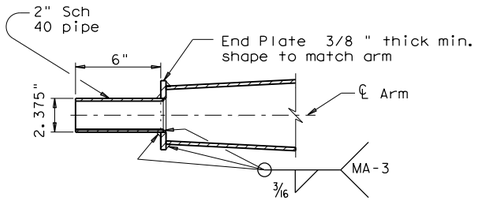

TENON DETAIL

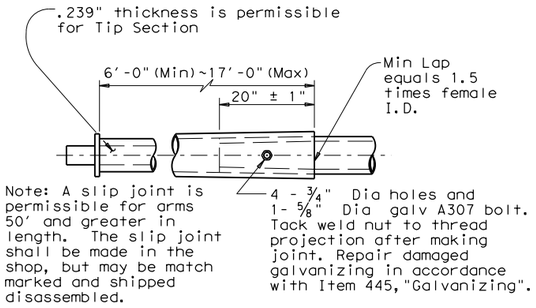

Note: A slip joint is permissible for arms 50' and greater in length. The slip joint shall be made in the shop, but may be match marked and shipped disassembled.

SLIP JOINT DETAIL (FIXED MOUNT ARM)

GENERAL NOTES:

Design conforms to 1994 AASHTO Standard Specifications for Structural Supports for Highway Signs, Luminaires, and Traffic Signals and Interim Specifications thereto. Design Wind Speed can be either 100 mph or 80 mph plus a 1.3 gust factor. If clamp-on traffic signal is required, designs are based on an arm included angle of 90 degrees or more. Angles of less than approximately 75 degrees will require a special design.

Poles are designed to support one 8'-0" luminaire arm, two 9'-0" internally lighted street name (ILSN) signs and two traffic signal arms with limited length combinations.

Each arm with its related attachment is shown below

Arm	Equivalent DL ⑤	WL EPA ⑤⑥
8' Luminaire Arm	Luminaire 60 lbs	1.6 sq ft
9' ILSN Arm	Sign 85 lbs	11.5 sq ft
50' to 65' Fixed Mount Arm	Signal Loads 310 lbs	52 sq ft
Up to 44' Clamp-on Arm	Signal Loads 180 lbs	32.4 sq ft

⑤ Equivalent dead load plus horizontal wind load applied at the end of arm except ILSN arm, which applied 4.5' from the centerline of the pole.

⑥ Effective projected area (actual area times drag coefficient) for the application of horizontal wind load.

Except as noted in Sheet 1 thru 5 of 5, other details not covered shall refer to Standard Sheet "MA-D" for pole details, "LUM-A" for luminaire arm and connection details, "SNS" for internally lighted street name sign details, and "TS-FD" for anchor bolt and foundation details.

Fabrication shall be in accordance with Item 686, "Traffic Signal Pole Assemblies (Steel)" and with the details, dimensions, and weld procedures shown herein. Weld references call for preapproved weld procedures which the Fabricator must obtain prior to fabrication. Material, fabrication tolerances, and shipping practices shall also meet the requirements of this sheet and Item 686, "Traffic Signal Pole Assemblies (Steel)".

Unless otherwise noted, all parts shall be galvanized in accordance with Item 445, "Galvanizing" after fabrication.

Deviations from the details and dimensions shown herein require submission of shop drawings in accordance with the Item 441, "Steel Structures". Alternate designs are not acceptable.

Installation of damping plate for the long mast arm is not recommended.

Provision of the bracket assembly used to support the traffic signal heads shall be under the direction of the Engineer for approval.

Design also conforms to NCHRP Report 412 for fatigue resistance except that there are no stiffeners at the base plate. TxDOT is conducting tests to determine if stiffeners at the base plate will or will not result in optimal performance; depending upon the results of the tests, poles may need a retrofit to ensure optimal fatigue performance.

Texas Department of Transportation
Traffic Operations Division

TRAFFIC SIGNAL SUPPORT STRUCTURES
LONG MAST ARM ASSEMBLY (50 TO 65 FT) (80 AND 100 MPH WIND ZONE)
LMA(1)-12

Sheet 1 of 5

© TxDOT July 2000

DN: TXDOT	CK: TXDOT	DW: TXDOT	CK: TXDOT

REVISIONS
4-20-01
1-12

CONT	SECT	JOB	HIGHWAY
0337	01	053	SH 29

DIST	COUNTY	SHEET NO.
AUS	WILLIAMSON	201

131A

DATE: 12/18/2025 2:39:09 PM
FILE: LMA(1)-12.dgn

DISCLAIMER: The use of this standard is governed by the "Texas Engineering Practice Act". No warranty of any kind is made by TxDOT for any purpose whatsoever. TxDOT assumes no responsibility for the conversion of this standard to other formats or for incorrect results or damages resulting from its use.

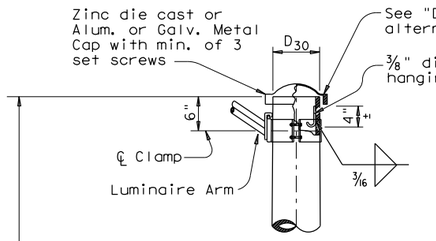

DETAIL A

(for pole with luminaire)

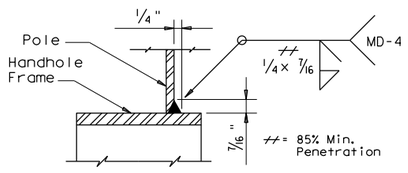

DETAIL H

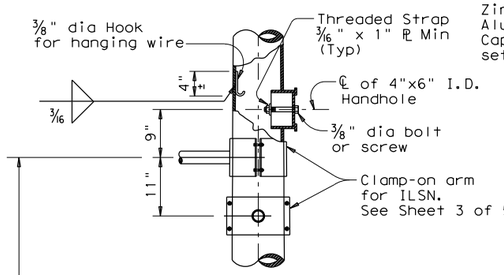

DETAIL B

(If ILSN applied)

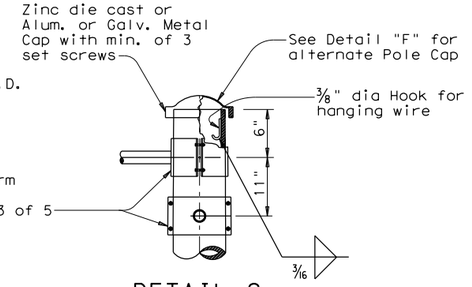

DETAIL C

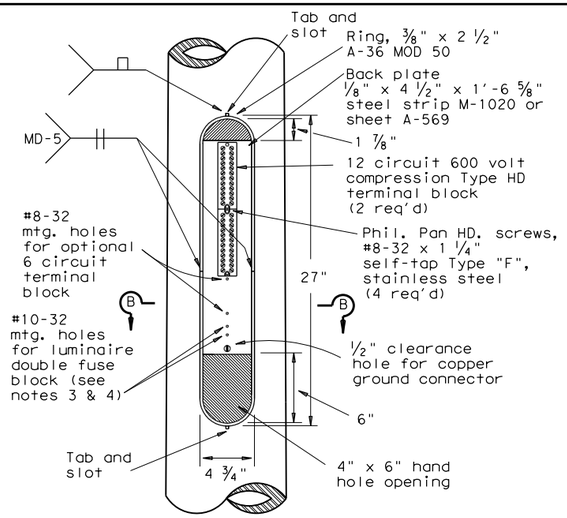

ACCESS COMPARTMENT

MATERIALS	
Round Shafts or Polygonal Shafts (7)	ASTM A595 Gr.A, A588, A1008 HSLAS Gr.50 Class 2, A1011 HSLAS Gr.50 Class 2, A572 Gr.50 or A1011 SS Gr.50 (8)
Plates (7)	ASTM A36, A588, or A572 Gr.50
Connection Bolts	ASTM A325, or A449 except where noted
Pin Bolts	ASTM A325
Pipe (7)	ASTM A53 Gr.B, A501, A1008 HSLAS-F Gr.50, A1011 HSLAS-F Gr.50
Misc. Hardware	Galvanized steel or stainless steel or as noted

(7) ASTM A572, A1008 HSLAS, A1011 HSLAS, A1008 HSLAS-F, A1011 HSLAS-F, or A1011 SS may have higher yield strengths but shall not have less elongation than the grade indicated.

(8) ASTM A1011 SS Gr.50 shall also have a minimum elongation of 18 percent in 8 inches or 23 percent in 2 inches. Material thickness in excess of those stipulated under A1011 SS will be acceptable providing the material meets all other A1011 SS requirements and the requirements of this item.

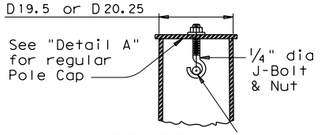

SECTION Y-Y

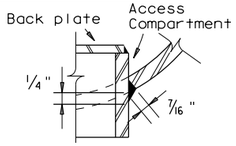

DETAIL J

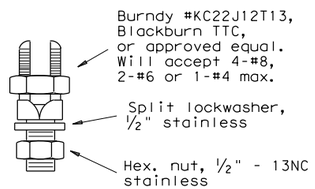

COPPER GROUND CONNECTOR

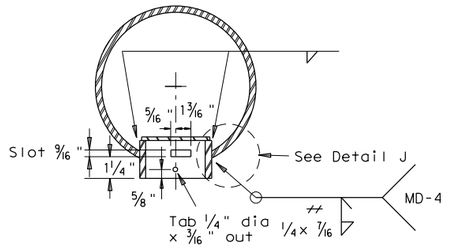

SECTION B-B // = 85% Min. Penetration

Opening for access compartment shall be no more than 1/16 inch wider than the access compartment itself.

ACCESS COMPARTMENT NOTES:

1. The cover shall be one piece formed from ABS plastic, shall be a pearl gray color, and shall be suitable for exposure to harsh sunlight and extreme weather. Cover shall latch with two screw latches and shall fit tightly to the enclosure ring to create a rainproof seal. Latch screws shall be 1/4-20 stainless flat socket head screws with tamper proof feature.
2. The pole manufacturer shall provide with each pole a separate kit consisting of: one cover with two latching assemblies, two terminal strips (Marathon #985GP12CU or approved equal), four #8-32 x 1 1/4" self tapping type "F" stainless steel pan head screws, and one ground connector (Blackburn TTC, Burndy KC22J12T13, or Ilsco SSS-5). The traffic signal contractor shall install the kit items in the field.
3. The screw hole spacing on the enclosure back plate shall be for two Marathon #985GP12 terminal strips, one Marathon #985GP06CU terminal strip, and one Bussmann #BM6032B fuse block.
4. Install one Bussmann #BM6032B, Littelfuse #L60030M-2C, or Ferraz-Shawmut #30352 fuse block for poles where luminaires are to be installed.

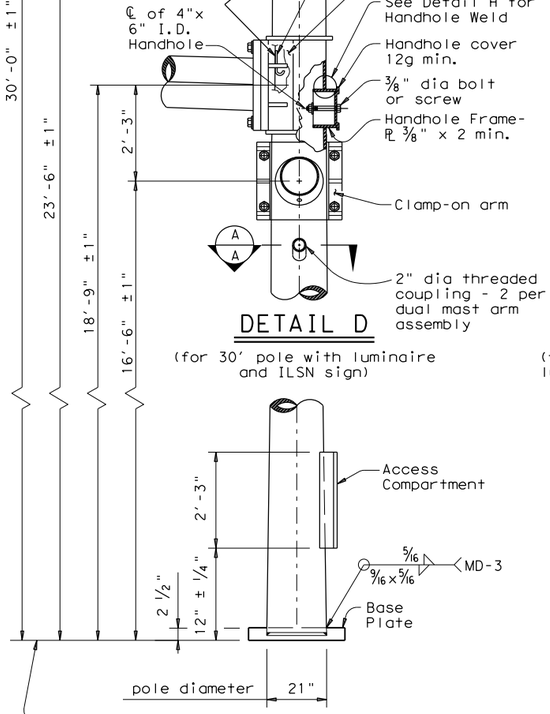

DETAIL D

(for 30' pole with luminaire and ILSN sign)

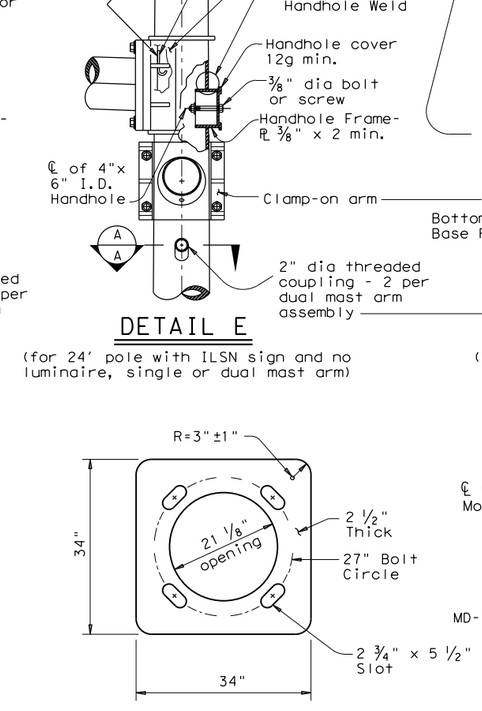

DETAIL E

(for 24' pole with ILSN sign and no luminaire, single or dual mast arm)

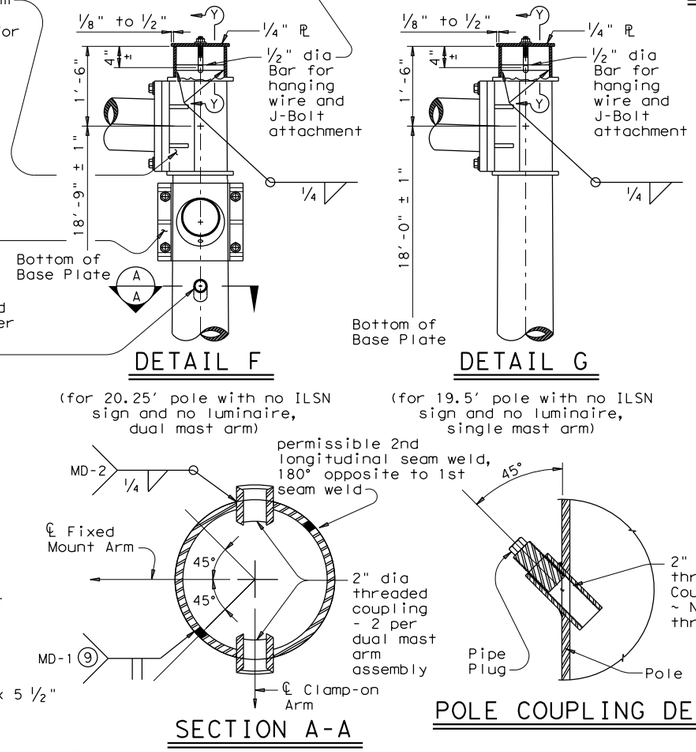

DETAIL F

(for 20.25' pole with no ILSN sign and no luminaire, dual mast arm)

DETAIL G

(for 19.5' pole with no ILSN sign and no luminaire, single mast arm)

POLE ELEVATION

BASE PLATE

SECTION A-A

POLE COUPLING DETAIL

(9) Longitudinal seam weld must be oriented within 90° (45° rotation each side) along the fixed mount arm. 60% min penetration required, 100% penetration within 6" of circumferential base weld.

Texas Department of Transportation
Traffic Operations Division

TRAFFIC SIGNAL SUPPORT STRUCTURES

LONG MAST ARM ASSEMBLY (50 TO 65 FT) (80 AND 100 MPH WIND ZONE)

Sheet 2 of 5

LMA(2)-12

© TxDOT July 2000

DN: JSY	CK: ARC	DW: TGG	CK: JSY

REVISIONS
4-20-01
1-12

CONT	SECT	JOB	HIGHWAY
0337	01	053	SH 29
DIST	COUNTY		SHEET NO.
AUS	WILLIAMSON		202

131B

DATE: 12/18/2025 2:39:35 PM
FILE: LMA(2)-12.dgn

DISCLAIMER: The use of this standard is governed by the "Texas Engineering Practice Act". No warranty of any kind is made by TxDOT for any purpose whatsoever. TxDOT assumes no responsibility for the conversion of this standard to other formats or for incorrect results or damages resulting from its use.

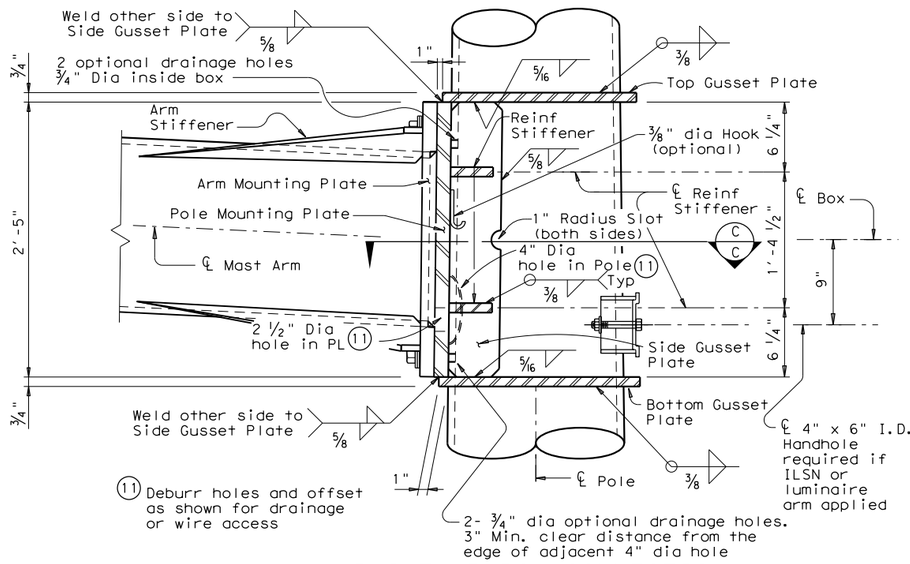

(11) Deburr holes and offset as shown for drainage or wire access

2- 3/4" dia optional drainage holes. 3" Min. clear distance from the edge of adjacent 4" dia hole

BUILT-UP BOX CONNECTION

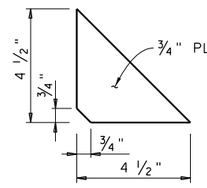

REINFORCING STIFFENER

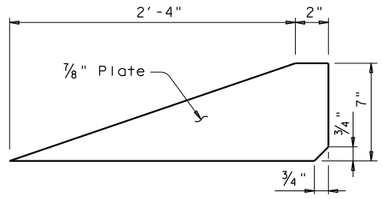

ARM STIFFENER

(Cut to match arm inclination and taper)

Provide Detail shown in SECTION F-F or equivalent 100% complete joint penetration weld from both sides.

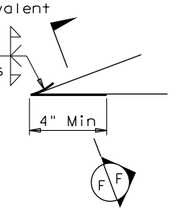

Only 4" length at tip of Arm Stiffener requires a complete joint penetration weld. Smooth weld radius to connect Stiffener. Only a fillet weld is required for the remaining weld length.

DETAIL "K"

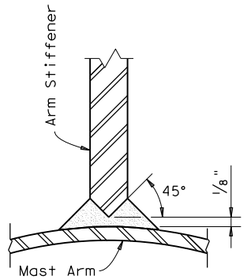

SECTION F-F

Fixed Mount Arm L_F	ROUND POLES (13)					Foundation Type
	D_B	$D_{19.5}$ or $D_{20.25}$	D_{24}	D_{30}	(12) thk	
ft.	in.	in.	in.	in.	in.	
50', 55' 60', 65'	21.0	18.2	17.6	16.8	.3125	48-A

Fixed Mount Arm L_F	ROUND ARMS (13)				
	L_1	D_1	D_2	(12) thk	Rise
ft.	ft.	in.	in.	in.	
50	49	18.5	11.7	.3125	3'- 3"
55	54	18.5	11.0	.3125	3'- 7"
60	59	18.5	10.3	.3125	3'-11"
65	64	18.5	9.6	.3125	4'- 4"

D_B = Pole Base O.D.
$D_{19.5}$ = Pole Top O.D. with no Luminaire and no ILSN (single mast arm)
$D_{20.25}$ = Pole Top O.D. with no Luminaire and no ILSN (dual mast arm)
D_{24} = Pole Top O.D. with ILSN w/out Luminaire
D_{30} = Pole Top O.D. with Luminaire
D_1 = Arm Base O.D.
D_2 = Arm End O.D.
L_1 = Shaft Length
L_F = Fixed Arm Length

(12) Thickness shown is minimum, thicker materials may be used.

(13) Shaft profile 16-sided or 18-sided is considered to be equivalent to round section.

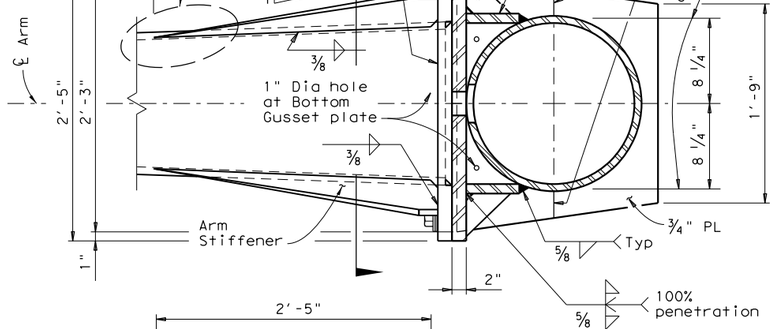

SECTION C-C

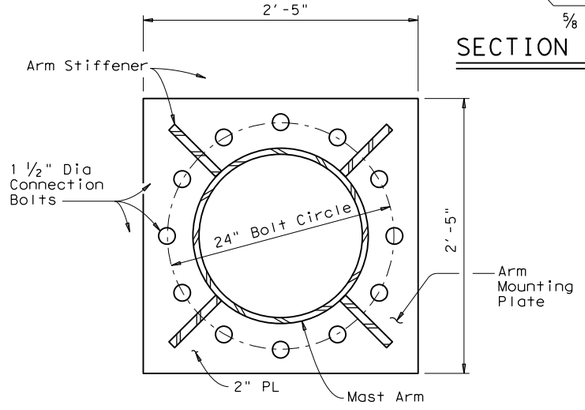

SECTION D-D

NUT ANCHOR
(TYPE 2)

ANCHOR BOLT ASSEMBLY

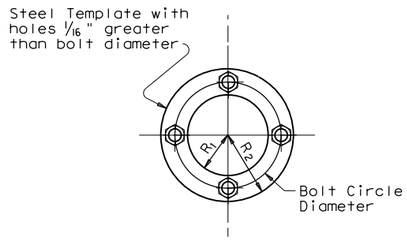

TEMPLATE DETAIL

ANCHOR BOLT & TEMPLATE SIZE						
Bolt Dia in.	Length ‡	Top Thread	Bottom Thread	Bolt Circle	R_2	R_1
2 1/2"	5'-2"	10"	6 1/2"	27"	16"	11"

‡ Min dimension given, longer bolts are acceptable.

FOUNDATION DESIGN TABLE													
FDN TYPE	DRILLED SHAFT DIA	REINFORCING STEEL		DRILLED SHAFT LENGTH-ft (16), (17), (18)			ANCHOR BOLT DESIGN (14)				FOUNDATION DESIGN LOAD (15)		TYPICAL APPLICATION
		VERT BARS	SPIRAL & PITCH	TEXAS CONE PENETROMETER N blows/ft			ANCHOR BOLT DIA	Fy (ksi)	BOLT CIR DIA	ANCHOR TYPE	MOMENT K-ft	SHEAR Kips	
				10	15	40							
48-A	48"	20 #9	#4 at 6"	21.9	19.5	14.7	2 1/2"	55	27"	2	490	10	50' to 65' Mast arm assembly.

SEE SHEET "TS-FD" FOR ADDITIONAL DETAILS.

(14) Anchor bolt design develops the foundation capacity given under Foundation Design Laods.

(15) Foundation Design Loads are the allowable moments and shears at the base of the structure.

(16) Field Penetrometer readings at a depth of approximately 3 to 5 feet may be used to adjust shaft lengths.

(17) If rock is encountered, the Drilled Shaft shall extend a minimum of two diameters into solid rock.

(18) Decimal lengths in Design Table are to allow interpolation for other penetrometer values. Round to nearest foot for entry into Summary Table.

GENERAL NOTES:

Built-up Box Connection: For the welded arm-to-pole connection as a build-up box configuration illustrated here is an example only, fabricators are required to submit a shop drawing of box connection for approval. The drawing shall specify the details of each box element, welds of arm-to-pole connection, arm-to-plate socket connection, and arm rise creation. Specify the proper location of drain holes along the pole. 2 1/2" dia hole in the pole mounting plate and 4" dia hole in the pole need to be aligned for wiring access or drainage. Arm stiffeners cut to match arm inclination and taper shall also be included.

The deviation from flat for either arm or pole mounting plate shall not exceed 1/32 in., which is measured along the center of mounting plate to a radial distance of 13.5 in. The deformed-from-flat connection between arm and pole mounting plates shall not be allowed if the center of both mounting plates cannot contact directly.

Fixed mount details are used for single mast arm assemblies and for the first arm on dual mast arm assemblies.

Texas Department of Transportation
Traffic Operations Division

TRAFFIC SIGNAL SUPPORT STRUCTURES
LONG MAST ARM ASSEMBLY (50 TO 65 FT) (80 AND 100 MPH WIND ZONE)

Sheet 3 of 5 LMA(3)-12

©TxDOT July 2000

DN: JSY	CK: ARC	DW: TGG	CK: JSY

REVISIONS
4-20-01
1-12

CONT	SECT	JOB	HIGHWAY
0337	01	053	SH 29
DIST	COUNTY		SHEET NO.
AUS	WILLIAMSON		203

131C

DATE: 12/18/2025 2:39:52 PM
FILE: LMA(3)-12.dgn

DISCLAIMER:
The use of this standard is governed by the "Texas Engineering Practice Act". No warranty of any kind is made by TxDOT for any purpose whatsoever. TxDOT assumes no responsibility for the conversion of this standard to other formats or for incorrect results or damages resulting from its use.

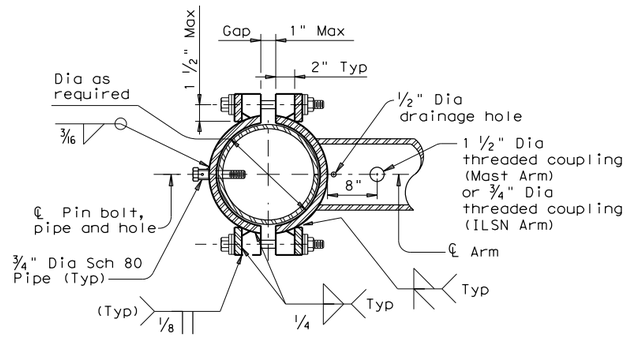

SECTION E-E

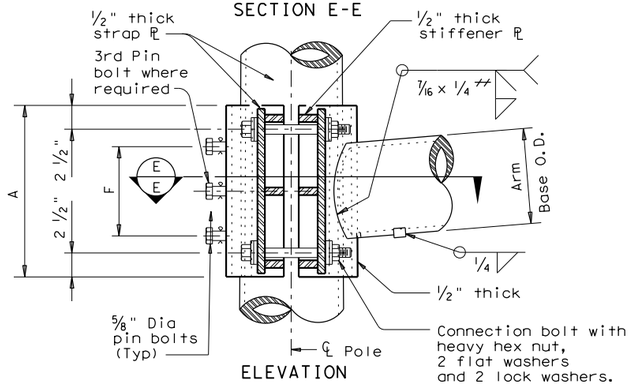

ELEVATION
(Mast Arm or ILSN Arm to pole)

= 85% Min. Penetration

CLAMP-ON CONNECTION

80 MPH WIND

Clamp-on Arm Lc	ROUND ARMS					POLYGONAL ARMS				
	L_1	D_1	D_2	thk (12)	Rise	L_1	D_1	D_2	thk (12)	Rise
ft.	ft.	in.	in.	in.		ft.	in.	in.	in.	
20	19.1	6.5	3.8	.179	1'-9"	19.1	7.0	3.5	.179	1'-8"
24	23.1	7.5	4.3	.179	1'-10"	23.1	7.5	3.5	.179	1'-9"
28	27.1	8.0	4.2	.179	1'-11"	27.1	8.0	3.5	.179	1'-10"
32	31.0	9.0	4.7	.179	2'-1"	31.0	9.0	3.5	.179	2'-0"
36	35.0	9.5	4.6	.179	2'-4"	35.0	10.0	3.5	.179	2'-1"
40	39.0	9.5	4.1	.239	2'-8"	39.0	9.5	3.5	.239	2'-3"
44	43.0	10.0	4.1	.239	2'-11"	43.0	10.0	3.5	.239	2'-6"

100 MPH WIND

Clamp-on Arm Lc	ROUND ARMS					POLYGONAL ARMS				
	L_1	D_1	D_2	thk (12)	Rise	L_1	D_1	D_2	thk (12)	Rise
ft.	ft.	in.	in.	in.		ft.	in.	in.	in.	
20	19.1	8.0	5.3	.179	1'-8"	19.1	8.0	3.5	.179	1'-7"
24	23.1	9.0	5.8	.179	1'-9"	23.1	9.0	3.5	.179	1'-8"
28	27.1	9.5	5.7	.179	1'-10"	27.1	10.0	3.5	.179	1'-9"
32	31.0	9.5	5.2	.239	1'-11"	31.0	9.5	3.5	.239	1'-10"
36	35.0	10.0	5.1	.239	2'-0"	35.0	10.0	3.5	.239	1'-11"
40	39.0	10.5	5.1	.239	2'-3"	39.0	11.0	3.5	.239	2'-1"
44	43.0	11.0	5.1	.239	2'-8"	43.0	11.5	4.0	.239	2'-3"

D1 = Arm Base O.D.
D2 = Arm End O.D.
L1 = Shaft Length
Lc = Clamp-on Arm Length

(12) Thickness shown is minimum, thicker materials may be used.

CLAMP-ON ARM CONNECTION

ILSN Arm Size		A	F	4 Conn. Bolts	⅝" Dia. Pin Bolts
Sch 40 pipe Dia	Thick			Dia	No.
in.	in.	in.	in.	in.	ea
3	.216	10	4	¾	2

Mast Arm Size		A	F	4 Conn. Bolts	⅝" Dia. Pin Bolts
Base Dia	Thick			Dia	No.
in.	in.	in.	in.	in.	ea
6.5	.179	12	6	1	2
7.5	.179	14	8	1	2
8.0	.179	14	8	1	2
9.0	.179	16	10	1	2
9.5	.179	18	12	1 ¼	3
9.5	.239	18	12	1 ¼	3
10.0	.239	18	12	1 ¼	3
10.5	.239	18	12	1 ¼	3
11.0	.239	18	12	1 ¼	3
11.5	.239	18	12	1 ¼	3

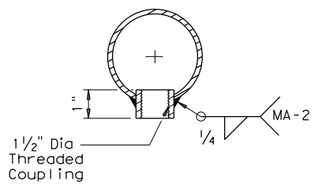

ARM COUPLING DETAIL

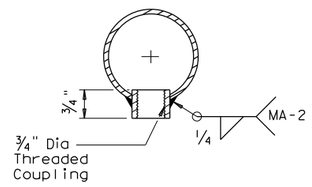

ILSN ARM COUPLING DETAIL

GENERAL NOTES:

Clamp-on details are used for the second arm on dual mast arm assemblies or ILSN arm support. For a clamp-on mast arm, a maximum 1 ½" wide vertical slotted hole may be cut in the front clamp plate to facilitate drainage during galvanizing. The slot shall be centered behind the arm and shall be no longer than the arm diameter minus 1". For an ILSN arm, a 1 ½" diameter hole shall be cut in the front clamp plate for wire access. A matched hole shall be field drilled through the pole to provide wire access after arm is oriented. Deburr both holes.

Where duplicate parts occur on a detail, welds shown for part shall apply to all similar parts on the detail.

Pin bolts are required to prevent rotation of clamp-on arms under design wind forces. Pin bolts shall be ASTM A325 with threads excluded from the shear plane. Pin bolt and ¾" diameter pipe shall have 3/16" diameter holes for a ⅛" diameter galvanized cotter pin. Back clamp plate shall be furnished with a ¾" diameter hole for each pin bolt. An 11/16" diameter hole for each pin bolt shall be field drilled through the pole after arm orientations have been approved by the Engineer.

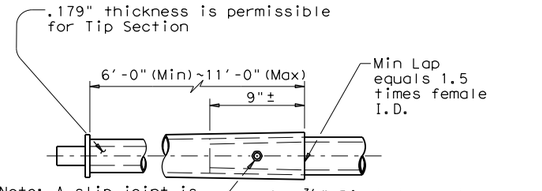

Note: A slip joint is permissible for arms 40' and greater in length. The slip joint shall be made in the shop, but may be match marked and shipped disassembled.

SLIP JOINT DETAIL (CLAMP-ON ARM)

Stainless steel bands (or Cables) and cast bracket as in "Astro-Brac", "Sky Bracket" or "Easy Bracket" with 1 ½" Dia Threaded Coupling.

BRACKET ASSEMBLY

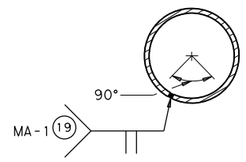

ARM WELD DETAIL

(19) Longitudinal Seam Weld must be oriented within the lower 90° of the signal arm.
60% Min penetration
100% penetration within 6" of circumferential base welds.

Texas Department of Transportation
Traffic Operations Division

TRAFFIC SIGNAL SUPPORT STRUCTURES
LONG MAST ARM ASSEMBLY (50 TO 65 FT) (80 AND 100 MPH WIND ZONE)

Sheet 4 of 5 — LMA(4)-12

© TxDOT November 2000

DN: JK	CK: GRB	DW: FDN	CK: CAL

REVISIONS
4-20-01
1-12

CONT	SECT	JOB	HIGHWAY
0337	01	053	SH 29

DIST	COUNTY	SHEET NO.
AUS	WILLIAMSON	204

131D

DATE: 12/18/2025 2:40:13 PM
FILE: LMA(4)-12.dgn

DISCLAIMER: The use of this standard is governed by the "Texas Engineering Practice Act". No warranty of any kind is made by TxDOT for any purpose whatsoever. TxDOT assumes no responsibility for the conversion of this standard to other formats or for incorrect results or damages resulting from its use.

Shipping Parts List

Ship each pole with the following attached: enlarged hand hole, pole cap, fixed arm connection bolts and washers, and any additional hardware listed in the table.

Nominal Arm Length	30' Poles with Luminaire: See note above plus: one (or two if ILSN attached) small hand hole, clamp-on simplex		24' Poles with ILSN: See note above plus one small hand hole		19.50' (Single Mast Arm) 20.25' (Dual Mast Arm) Poles with no Luminaire and no ILSN: See note above	
Single Mast Arm						
Lf ft.	Designation	Quantity	Designation	Quantity	Designation	Quantity
50	50L	1	50S		50	
55	55L		55S		55	
60	60L	4	60S		60	
65	65L	2	65S		65	
Dual Mast Arm						
Lf ft. / Lc ft.	Designation	Quantity	Designation	Quantity	Designation	Quantity
50 / 20	5020L		5020S		5020	
50 / 24	5024L		5024S		5024	
50 / 28	5028L		5028S		5028	
50 / 32	5032L		5032S		5032	
50 / 36	5036L		5036S		5036	
50 / 40	5040L		5040S		5040	
50 / 44	5044L		5044S		5044	
55 / 20	5520L		5520S		5520	
55 / 24	5524L		5524S		5524	
55 / 28	5528L		5528S		5528	
55 / 32	5532L		5532S		5532	
55 / 36	5536L		5536S		5536	
55 / 40	5540L		5540S		5540	
55 / 44	5544L		5544S		5544	
60 / 20	6020L		6020S		6020	
60 / 24	6024L		6024S		6024	
60 / 28	6028L		6028S		6028	
60 / 32	6032L		6032S		6032	
60 / 36	6036L		6036S		6036	
60 / 40	6040L		6040S		6040	
60 / 44	6044L		6044S		6044	
65 / 20	6520L		6520S		6520	
65 / 24	6524L		6524S		6524	
65 / 28	6528L		6528S		6528	
65 / 32	6532L		6532S		6532	
65 / 36	6536L		6536S		6536	
65 / 40	6540L		6540S		6540	
65 / 44	6544L		6544S		6544	

Shipping Parts List

Traffic Signal Arms (Fixed Mount) (1 per pole)
Ship each arm with listed equipment attached

Nominal Arm Length	Type IV Arm (4 Signals) 3 Bracket Assembly and 4 CGB Connectors	
ft.	Designation	Quantity
50	50IV	1
55	55IV	
60	60IV	4
65	65IV	2

Luminaire Arms (1 per 30' pole)

Nominal Arm Length	Quantity
8' Arm	7

ILSN Arm (Max. 2 per pole) Ship with clamps, bolts and washers

Nominal Arm Length	Quantity
9' Arm	
11' Arm	8

Traffic Signal Arms (80 MPH Clamp-On Mount) (1 per pole) Ship each arm with listed equipment attached

Nominal Arm Length	Type I Arm (1 Signal) 2 CGB connector and 1 clamp w/bolts and washers		Type II Arm (2 Signals) 1 Bracket Assembly and 3 CGB connectors, and 1 clamp w/bolts and washers		Type III Arm (3 Signals) 2 Bracket Assembly and 4 CGB connectors, and 1 clamp w/bolts and washers	
ft.	Designation	Quantity	Designation	Quantity	Designation	Quantity
20	20I-80					
24	24I-80		24II-80			
28	28I-80		28II-80			
32			32II-80		32III-80	
36			36II-80		36III-80	
40					40III-80	
44					44III-80	

Traffic Signal Arms (100 MPH Clamp-On Mount) (1 per pole) Ship each arm with listed equipment attached

Nominal Arm	Type I Arm (1 Signal) 2 CGB connector and 1 clamp w/bolts and washers		Type II Arm (2 Signals) 1 Bracket Assembly and 3 CGB connectors, and 1 clamp		Type III Arm (3 Signals) 2 Bracket Assembly and 4 CGB connectors, and 1 clamp	
ft.	Designation	Quantity	Designation	Quantity	Designation	Quantity
20	20I-100					
24	24I-100		24II-100			
28	28I-100		28II-100			
32			32II-100		32III-100	
36			36II-100		36III-100	
40					40III-100	
44					44III-100	

Anchor Bolt Assemblies (1 per pole)

Anchor Bolt Diameter	Anchor Bolt Length	Quantity
2 1/2 "	5' - 3"	7

Each anchor bolt assembly consists of the following: Top and bottom templates, 4 anchor bolts, 8 nuts, 8 flat washers and 4 nut anchor devices (type 2) per Standard Drawing "TS-FD". Templates may be removed for shipment.

Foundation Summary Table **

Location Ident.	Avg. N Blow/ft.	No. Each	Drill Shaft *** Length (feet)
			48-A
WOLF RANCH: POLE A	10	1	22
WOLF RANCH: POLE B	10	1	22
WOLF RANCH: POLE D	10	1	22
WOLF LAKES: POLE A	10	1	22
WOLF LAKES: POLE B	10	1	22
WOLF LAKES: POLE C	10	1	22
WOLF LAKES: POLE D	10	1	22
Total Drill Shaft Length			154

Notes

** Foundations may be listed separately or grouped according to similarity of location and type. Quantities are for the Contractor's information only.

*** Decimal lengths in Design Table are to allow interpolation for other penetrometer values. Round to nearest foot for entry into Summary Table.

Abbreviations
Lf= Fixed Arm Length
Lc= Clamp-on Arm Length (44' Max.)

Matthew Gaal
9/24/2025

STATE OF TEXAS
MATTHEW A. GAAL
140753
LICENSED
PROFESSIONAL ENGINEER

Texas Department of Transportation
Traffic Operations Division

LONG MAST ARM ASSEMBLY PARTS LIST

LMA(5)-12

Sheet 5 of 5

©TxDOT November 2000

DN: JK	CK: GRB	DW: FDN	CK: CAL

REVISIONS
4-20-01
1-12

CONT	SECT	JOB	HIGHWAY
0337	01	053	SH 29
DIST	COUNTY		SHEET NO.
AUS	WILLIAMSON		205

131E

DATE: 9/24/2025 6:36:22 PM
FILE: LMA(5)-12.dgn

DISCLAIMER: The use of this standard is governed by the "Texas Engineering Practice Act". No warranty of any kind is made by TxDOT for any purpose whatsoever. TxDOT assumes no responsibility for the conversion of this standard to other formats or for incorrect results or damages resulting from its use.

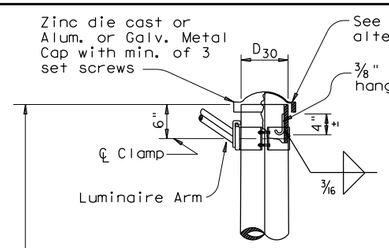

DETAIL A

(for pole with luminaire)

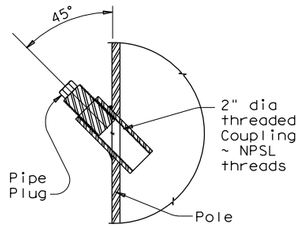

POLE COUPLING DETAIL

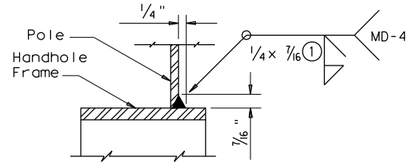

DETAIL G

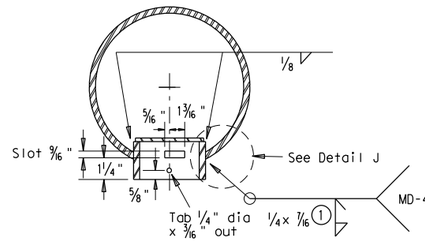

SECTION X-X

Opening for access compartment shall be no more than 1/16 inch wider than the access compartment itself.

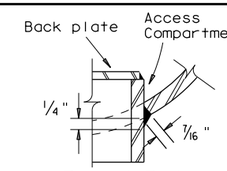

Round Pole

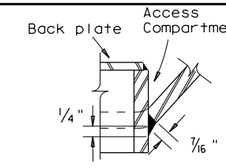

Polygonal Pole

DETAIL J

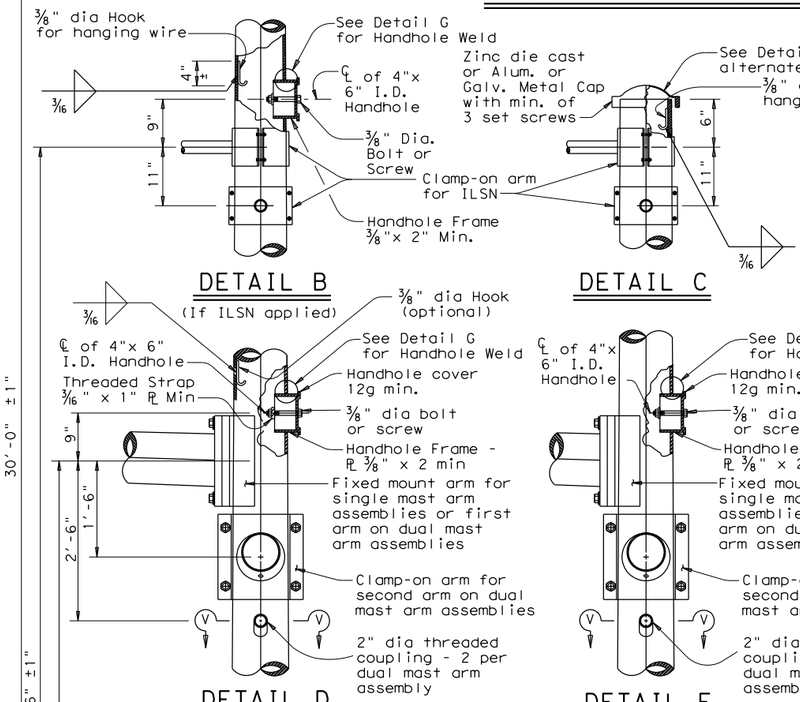

DETAIL B

(If ILSN applied)

DETAIL C

DETAIL D

(for 30' pole with luminaire and ILSN sign)

DETAIL E

(for 24' pole with ILSN sign and no luminaire)

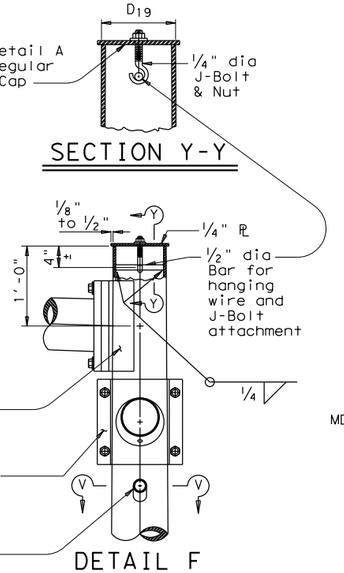

SECTION Y-Y

DETAIL F

(for 19' pole with no ILSN sign and no luminaire)

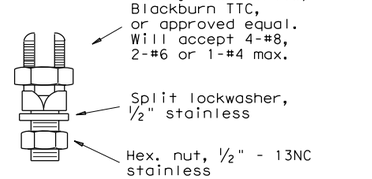

COPPER GROUND CONNECTOR

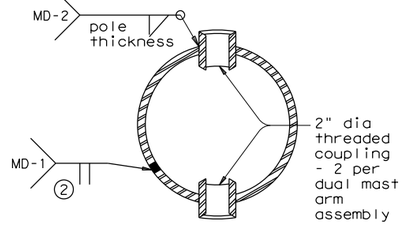

SECTION V-V

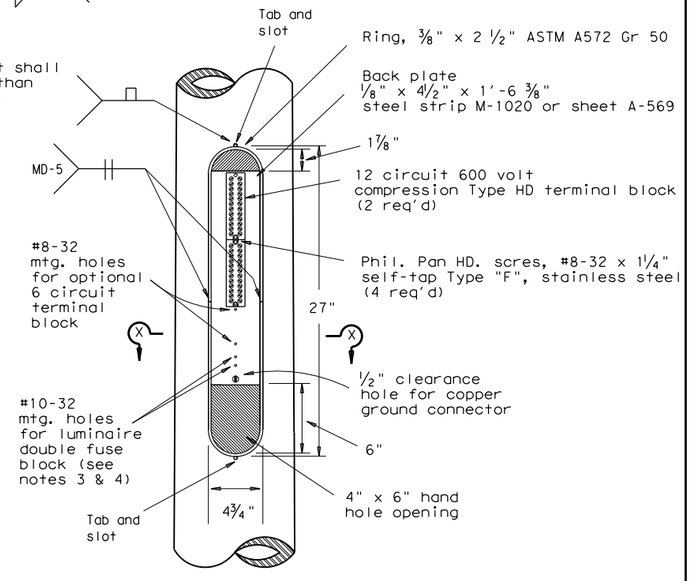

ACCESS COMPARTMENT

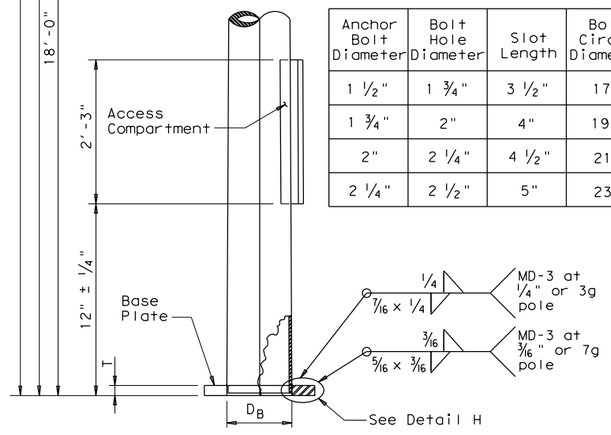

POLE ELEVATION

Anchor Bolt Diameter	Bolt Hole Diameter	Slot Length	Bolt Circle Diameter	Base ℞ Dim. L x T	Adjust. Range
1 1/2"	1 3/4"	3 1/2"	17"	18" x 1 1/2"	13.4°
1 3/4"	2"	4"	19"	20" x 1 3/4"	13.5°
2"	2 1/4"	4 1/2"	21"	22" x 2"	13.6°
2 1/4"	2 1/2"	5"	23"	24" x 2 1/4"	13.7°

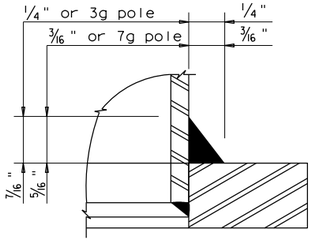

DETAIL H

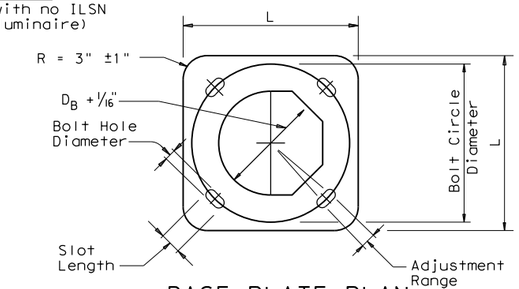

BASE PLATE PLAN

(1) 85% Min. penetration

(2) 60% Min. penetration 100% pemetration within 6" of circumferential base welds.

NOTES:

1. The cover shall be one piece formed from ABS plastic, shall be a pearl gray color, and shall be suitable for exposure to harsh sunlight and extreme weather. Cover shall latch with two screw latches and shall fit tightly to the enclosure ring to create a rainproof seal. Latch screws shall be 1/4-20 stainless flat socket head screws with tamper proof feature.
2. The pole manufacturer shall provide with each pole a separate kit consisting of: one cover with two latching assemblies, two terminal strips (Marathon #985GP12CU or approved equal), four #8-32 x 1 1/4" self tapping type "F" stainless steel pan head screws, and one ground connector (Blackburn TTC, Burndy KC22J12T13, or Ilsco SSS-5). The traffic signal contractor shall install the kit items in the field.
3. The screw hole spacing on the enclosure back plate shall be for two Marathon #985GP12 terminal strips, one Marathon #985GP06CU terminal strip, and one Bussmann #BM6032B fuse block.
4. Install one Bussmann #BM6032B, Littelfuse #L60030M-2C, or Ferraz-Shawmut #30352 fuse block for poles where luminaires are to be installed.

Texas Department of Transportation
Traffic Operations Division

TRAFFIC SIGNAL SUPPORT STRUCTURES MAST ARM POLE DETAILS

MA-D-12

© TxDOT August 1995

DN: MS	CK: JSY	DW: FDN	CK: CAL

REVISIONS
8-99
1-12

CONT	SECT	JOB	HIGHWAY
0337	01	053	SH 29
DIST	COUNTY		SHEET NO.
AUS	WILLIAMSON		206

DATE: 12/18/2025 2:40:57 PM
FILE: MA-D-12.dgn

DISCLAIMER:
The use of this standard is governed by the "Texas Engineering Practice Act". No warranty of any kind is made by TxDOT for any purpose whatsoever. TxDOT assumes no responsibility for the conversion of this standard to other formats or for incorrect results or damages resulting from its use.

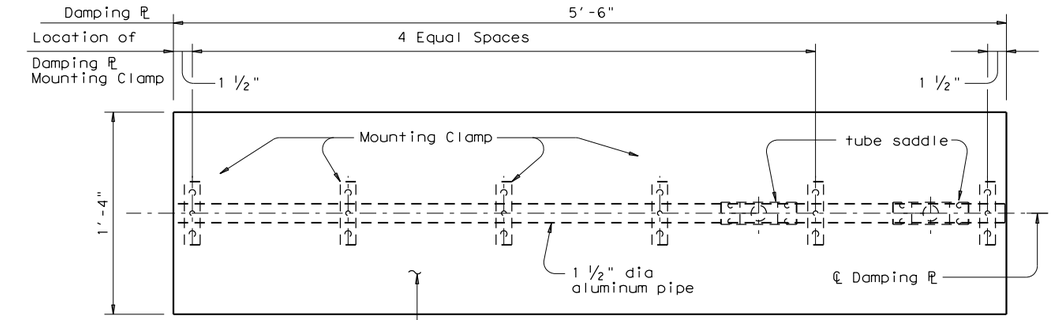

PLAN

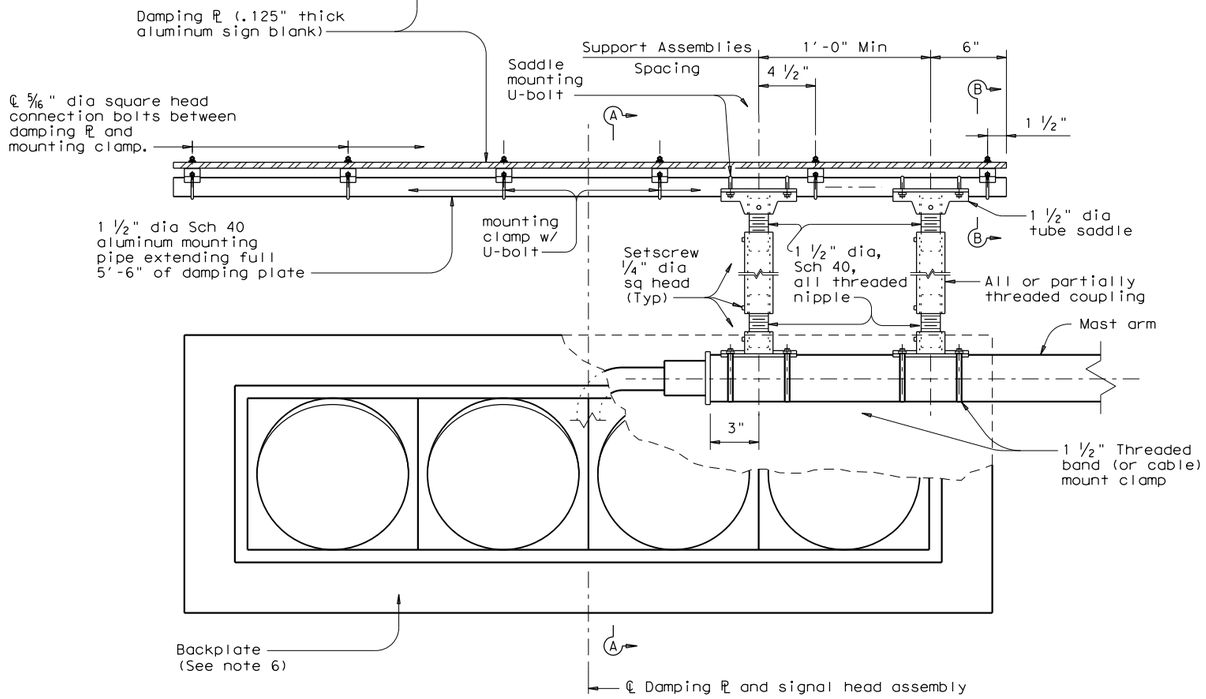

ELEVATION

DAMPING PLATE MOUNTING DETAILS

(Showing alternate placement of signal head)

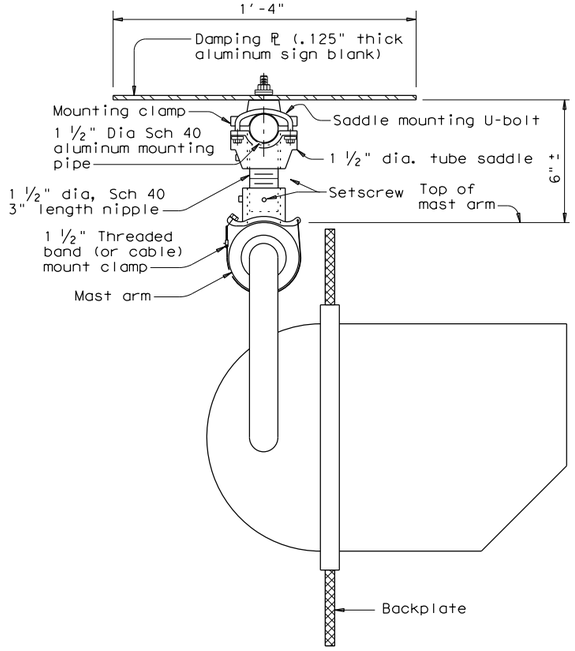

SECTION A-A

(Showing standard placement of signal head)

(Mounting clamp U-bolt is not shown for clarity)

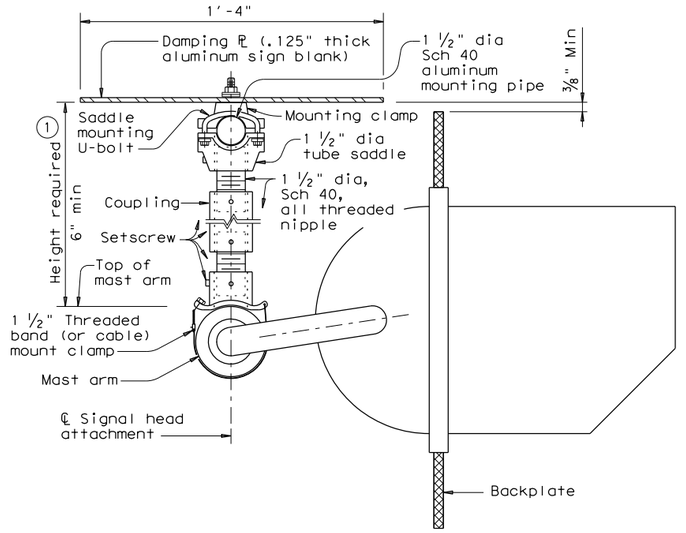

SECTION A-A

(Showing alternate placement of signal head)

(Mounting clamp U-bolt is not shown for clarity)

① Recommended supporting assemblies to achieve required height for horizontal section heads			
Height required	One nipple each length	Two nipples each length plus	One coupling each length
6"-6 ¾"	3"	-	-
7"-8 ½"	4"	-	-
9"-10 ½"	6"	-	-
11"-15 ½"	-	4"	5"
16"-24"	-	6"	10"

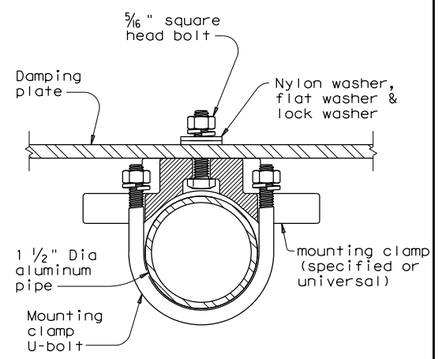

SECTION B-B

(Showing damping plate attachment)

GENERAL NOTES:

1. In accordance with the findings of TxDOT sponsored research, the installation of a damping plate in accordance with the details shown here at the end of signal mast arms of SMA and DMA standard structures reduces excessive harmonic vertical vibration, and thus fatigue damage. Any deviation from these details may reduce the effectiveness of this damping device.

2. Aluminum sign blank for damping plate will conform to Departmental Material Specifications DMS-7110. Materials for mast arm mounting clamp and tube saddle will be aluminum castings or aluminum alloys as in accordance with manufacturers' stipulations. Mounting pipe, pipe nipple and coupling will be aluminum alloy 6061-T6 or 6063-T6. Damping plate mounting clamp and u-bolt assemblies will conform to Standard sheet SMD(GEN). U-bolts for saddle mounting will have a minimum yield strength of 36 ksi.

3. Damping plate will be mounted horizontally. Position centerline of damping plate to align with centerline of mast arm or horizontal signal head assembly. Vertical clearance between signal head (with or without backing plate) and bottom of damping plate will be maintained as shown. The attachments shown here are examples only, other supporting details which meet both alignment and vertical clearance requirements are also acceptable.

4. Unless stipulated by the manufacturers, all steel parts will be galvanized finish in accordance with Standard Specification Item 445, "Galvanizing".

5. Contractor will verify applicable field dimensions before the installation.

6. Backplates are optional for traffic signals. When backplates are used, Backplates will have a 2-inch fluorescent yellow AASHTO Type B_{FL} or C_{FL} retroreflective border conforming to TxDOT DMS-8300 "Sign Face Materials." See Sheet TS-BP-20 for backplate details.

Texas Department of Transportation

Traffic Safety Division Standard

MAST ARM DAMPING PLATE DETAILS

MA-DPD-20

FILE: ma-dpd-20.dgn	DN: TxDOT	CK: TxDOT	DW: TxDOT	CK: TxDOT
©TxDOT June 2020	CONT	SECT	JOB	HIGHWAY
REVISIONS	0337	01	053	SH 29
4-20	DIST	COUNTY		SHEET NO.
6-20	AUS	WILLIAMSON		207

DATE: 12/18/2025 2:41:22 PM
FILE: MA-DPD-20.dgn

DISCLAIMER: The use of this standard is governed by the "Texas Engineering Practice Act". No warranty of any kind is made by TxDOT for any purpose whatsoever. TxDOT assumes no responsibility for the conversion of this standard to other formats or for incorrect results or damages resulting from its use.

ARM SIZE D_1	ARM SIZE ϯ	A	B	C	D	E	CONN BOLT DIA
in.	in.	in.	in.	in.	in.	in.	in.
6.5	.179	12	9	9	6	1 ¾	1
7.5	.179	13	9	10	6	1 ¾	1
8.0	.179	14	10	11	7	2	1 ¼
9.0	.179	16	11	13	8	2	1 ¼
9.5	.179	17	12	14	9	2	1 ¼
9.5	.239	18	12	15	9	2	1 ¼
10.0	.239	18	12	15	9	2	1 ¼
10.5	.239	18	13	15	10	3	1 ½
11.0	.239	18	13	15	10	3	1 ½

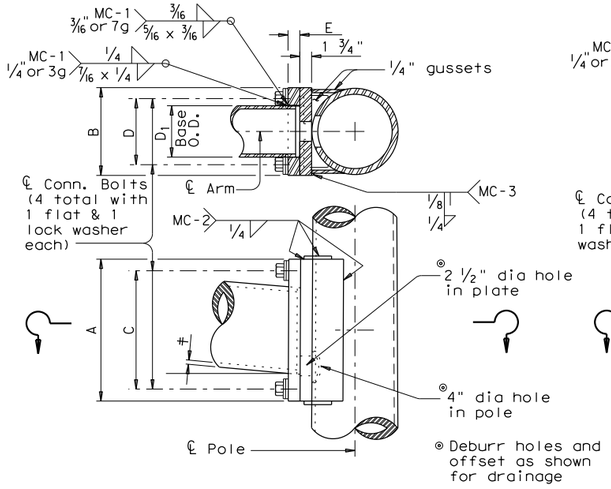

FIXED MOUNT DETAIL 1

ARM SIZE D_1	ARM SIZE ϯ	A	F	CONN. BOLTS No.	CONN. BOLTS Dia	PIN BOLTS No.	PIN BOLTS Dia
in.	in.	in.	in.	ea.	in.	ea.	in.
6.5	.179	12	6	4	1	2	⅝
7.5	.179	14	8	4	1	2	⅝
8.0	.179	14	8	4	1	2	⅝
9.0	.179	16	10	4	1	2	⅝
9.5	.179	18	12	4	1 ¼	3	⅝
9.5	.239	18	12	4	1 ¼	3	⅝
10.0	.239	18	12	4	1 ¼	3	⅝

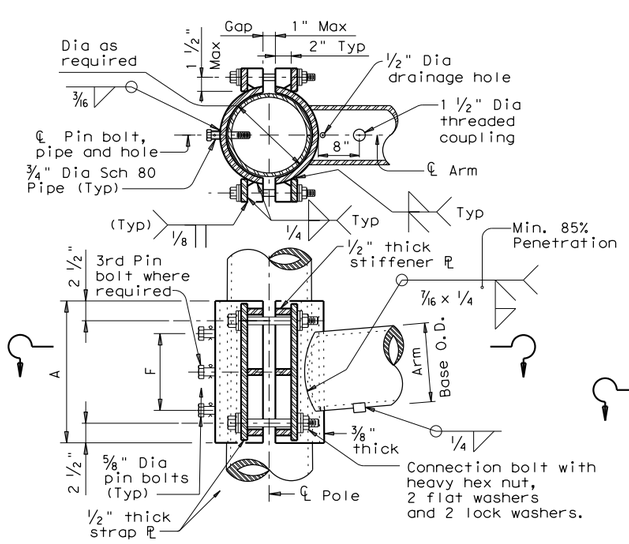

CLAMP-ON DETAIL 1

ARM SIZE D_1	ARM SIZE ϯ	A	B	C	D	E	CONN BOLT DIA
in.	in.	in.	in.	in.	in.	in.	in.
7.0	.179	11	11	8	8	1 ¾	1 ¼
7.5	.179	11	11	8	8	1 ¾	1 ¼
8.0	.179	11	11	8	8	2	1 ¼
9.0	.179	13	13	10	10	2	1 ¼
10.0	.179	13	13	10	10	2	1 ¼
9.5	.239	13	13	10	10	2	1 ¼
10.0	.239	14	14	11	11	2	1 ½
11.0	.239	14	14	11	11	3	1 ½
11.5	.239	14	14	11	11	3	1 ½

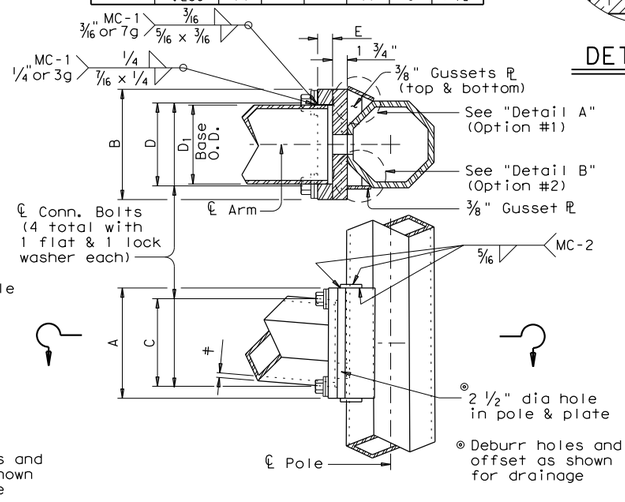

FIXED MOUNT DETAIL 2

ARM SIZE D_1	ARM SIZE ϯ	A	F	T	CONN. BOLTS No.	CONN. BOLTS Dia	PIN BOLTS No.	PIN BOLTS Dia
in.	in.	in.	in.	in.	ea.	in.	ea.	in.
7.0	.179	12	6	¾	4	¾	2	⅝
7.5	.179	14	8	¾	4	¾	2	⅝
8.0	.179	14	8	¾	4	¾	2	⅝
9.0	.179	16	10	⅞	4	1	2	⅝
10.0	.179	18	10	⅞	4	1	2	⅝
9.5	.239	18	10	1	6	1	3	⅝
10.0	.239	18	10	1	6	1	3	⅝

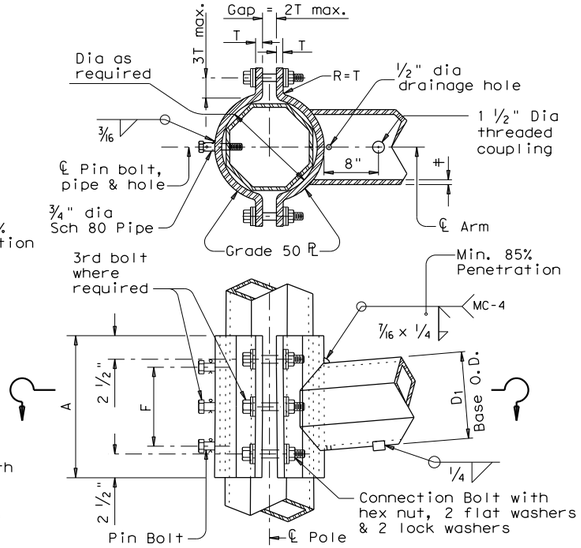

CLAMP-ON DETAIL 2

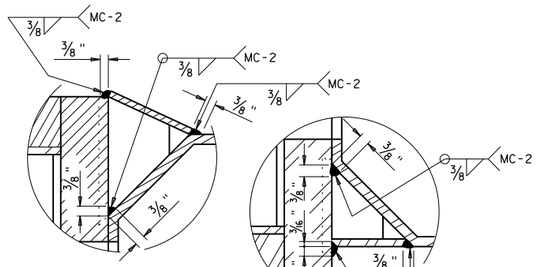

DETAIL A

DETAIL B

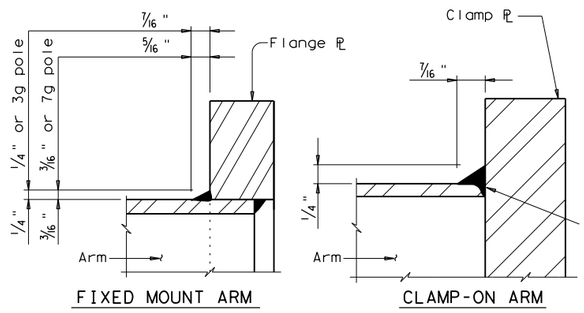

FIXED MOUNT ARM

CLAMP-ON ARM

ARM BASE WELD DETAILS

ARM SIZE D_1	ARM SIZE ϯ	A	F	CONN. BOLTS No.	CONN. BOLTS Dia	PIN BOLTS No.	PIN BOLTS Dia
in.	in.	in.	in.	ea.	in.	ea.	in.
6.5	.179	12	6	4	1	2	⅝
7.5	.179	14	8	4	1	2	⅝
8.0	.179	14	8	4	1	2	⅝
9.0	.179	16	10	4	1	2	⅝
9.5	.179	18	12	6	1	3	⅝
9.5	.239	18	12	6	1	3	⅝
10.0	.239	18	12	6	1	3	⅝

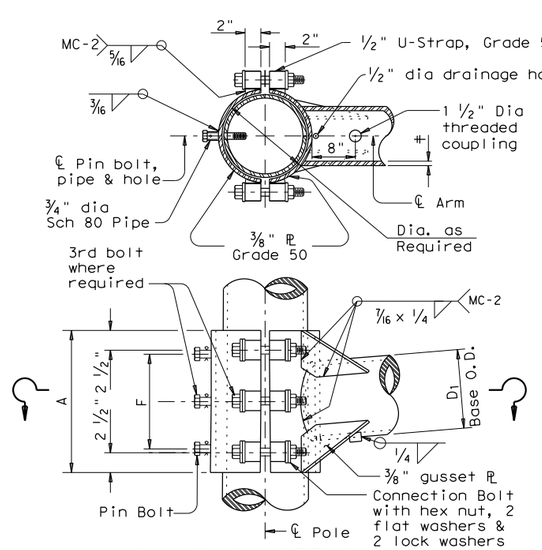

CLAMP-ON DETAIL 3

MATERIALS	
Round Shafts or Polygonal Shafts ①	ASTM A595 Gr.A, A588, A1008 HSLAS Gr.50 Class 2, A1011 HSLAS Gr.50 Class 2, A572 Gr.50 or A1011 SS Gr.50 ②
Plates ①	ASTM A36, A588, or A572 Gr.50
Connection Bolts	ASTM A325 or A449, except where noted
Pin Bolts	ASTM A325
Pipe ①	ASTM A53 Gr.B, A501, A1008 HSLAS-F Gr.50, A1011 HSLAS-F Gr.50
Misc. Hardware	Galvanized steel or stainless steel or as noted

① ASTM A572, A1008 HSLAS, A1011 HSLAS, A1008 HSLAS-F, A1011 HSLAS-F or A1011 SS may have higher yield strengths but shall not have less elongation than the grade indicated.

② ASTM A1011 SS Gr.50 material shall also have a minimum elongation of 18 percent in 8 inches or 23 percent in 2 inches. Material thickness in excess of those stipulated under A1011 SS will be acceptable providing the material meets all other A1011 SS requirements and the requirements of this item.

GENERAL NOTES:

Clamp-on details are used for the second arm on dual mast arm assemblies. A Maximum 1 ½" wide vertical slotted hole shall be cut in the front clamp plate to facilitate drainage during galvanizing. The slot shall be centered behind the arm and shall be no longer than the arm diameter minus 1"

Fixed mount details are used for single mast arm assemblies and for the first arm on dual mast arm assemblies.

Where duplicate parts occur on a detail, welds shown for one part shall apply to all similar parts on the detail.

Pin bolts are required to prevent rotation of clamp-on arms under design wind forces.

NOTE:

Pin bolts shall be A325 with threads excluded from the shear plane. Pin bolt and ¾" dia pipe shall have 5/16" dia holes for a 1/8" dia galvanized cotter pin. Back clamp plate shall be furnished with a ¾" dia hole for each pin bolt. An 11/16" dia hole for each pin bolt shall be field drilled through the pole after arm orientations have been approved by the Engineer.

DATE: 12/18/2025 2:41:49 PM
FILE: MA-C-12.dgn

Texas Department of Transportation
Traffic Operations Division

STANDARD ASSEMBLY FOR TRAFFIC SIGNAL SUPPORT STRUCTURES

MAST ARM CONNECTIONS

MA-C-12

©TxDOT August 1995

REVISIONS	DN: MS	CK: JSY	DW: MMF	CK: JSY
5-96	CONT	SECT	JOB	HIGHWAY
5-09	0337	01	053	SH 29
1-12	DIST	COUNTY		SHEET NO.
	AUS	WILLIAMSON		208

126A

DISCLAIMER: The use of this standard is governed by the "Texas Engineering Practice Act". No warranty of any kind is made by TxDOT for any purpose whatsoever. TxDOT assumes no responsibility for the conversion of this standard to other formats or for incorrect results or damages resulting from its use.

TABLE OF DIMENSIONS for ILSN Support Arm Clamp-on Details 1, 2 and 3						
ILSN ARM SIZE	A	F	CONN. BOLTS		PIN BOLTS	
			No.	Dia	No.	Dia
3 in. dia Schedule 40 Pipe	in.	in.	ea.	in.	ea.	in.
	10	4	4	¾	2	⅝

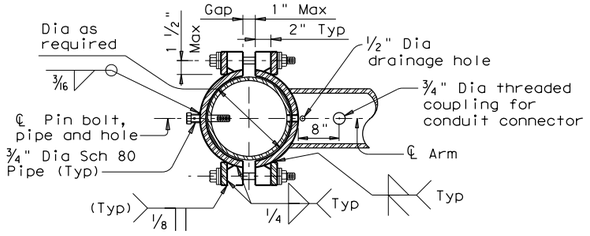

SECTION A-A

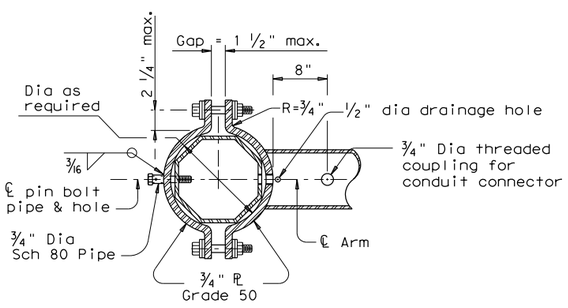

SECTION B-B

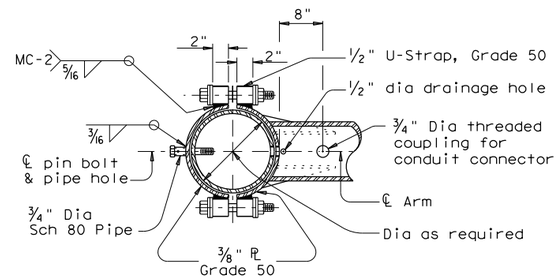

SECTION C-C

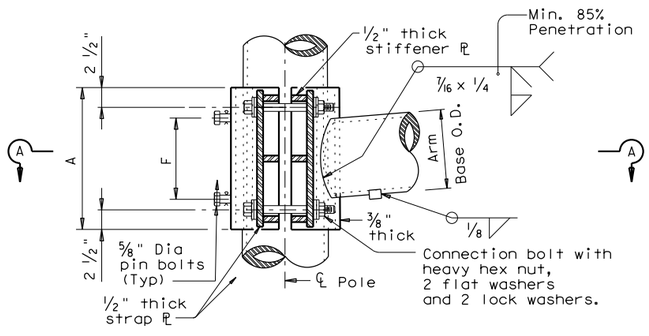

ILSN CLAMP-ON DETAIL 1

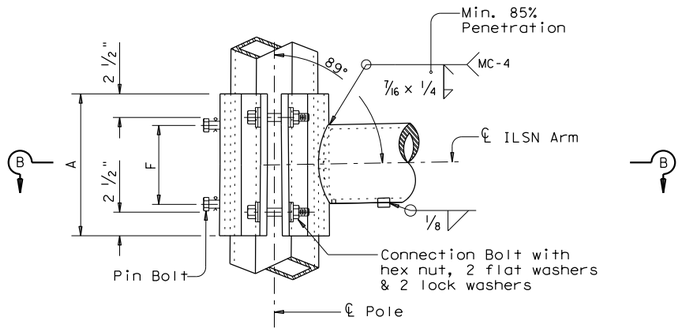

ILSN CLAMP-ON DETAIL 2

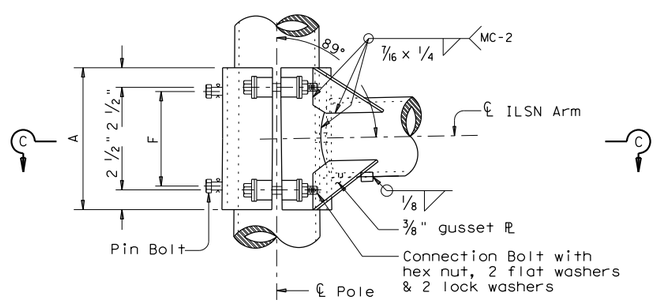

ILSN CLAMP-ON DETAIL 3

GENERAL NOTES:

Clamp-on details shall be used for ILSN support arm assemblies. A 1 ½" inch diameter hole shall be cut in the front clamp plate for wiring access. A matched hole shall be field drilled through the pole to provide wire access after arm is oriented. Deburr both holes.

Where duplicate parts occur on a detail, welds shown for one part shall apply to all similar parts on the details.

Pin bolts are required to prevent rotation of clamp-on arms under design wind forces.

NOTE:

Pin bolts shall be A325 with threads excluded from the shear plane. Pin bolt and ¾" dia pipe shall have 7/16" dia holes for a ⅛" dia galvanized cotter pin. Back clamp plate shall be furnished with a ¾" dia hole for each pin bolt. An 11/16" dia hole for each pin bolt shall be field drilled through the pole after arm orientations have been approved by the Engineer.

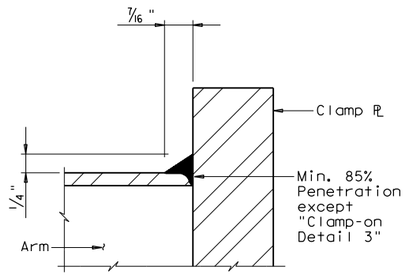

CLAMP-ON ARM

ARM BASE WELD DETAILS

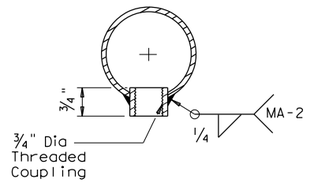

ILSN ARM COUPLING DETAIL

Texas Department of Transportation
Traffic Operations Division

STANDARD ASSEMBLY FOR TRAFFIC SIGNAL SUPPORT STRUCTURES

MAST-ARM CONNECTIONS

MA-C(ILSN)-12

© TxDOT August 1995	DN: MS	CK: JSY	DW: MMF	CK: JSY
REVISIONS	CONT	SECT	JOB	HIGHWAY
5-96	0337	01	053	SH 29
1-12	DIST	COUNTY		SHEET NO.
	AUS	WILLIAMSON		209

126B

DATE: 12/18/2025 2:42:07 PM
FILE: MA-C(ILSN)-12.dgn

DISCLAIMER: The use of this standard is governed by the "Texas Engineering Practice Act". No warranty of any kind is made by TxDOT for any purpose whatsoever. TxDOT assumes no responsibility for the conversion of this standard to other formats or for incorrect results or damages resulting from its use.

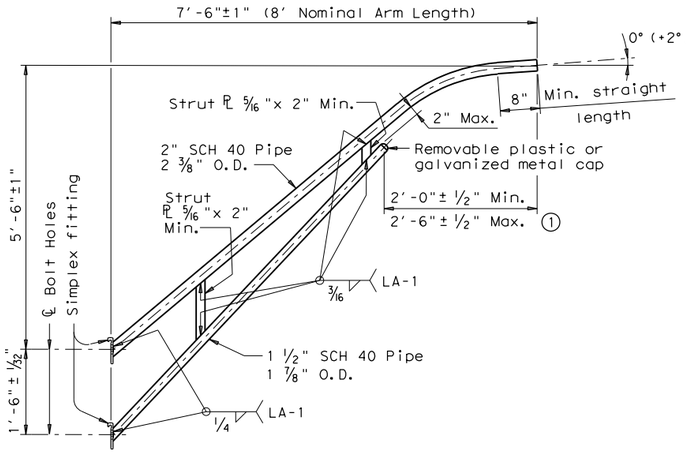

8-FOOT LUMINAIRE ARM

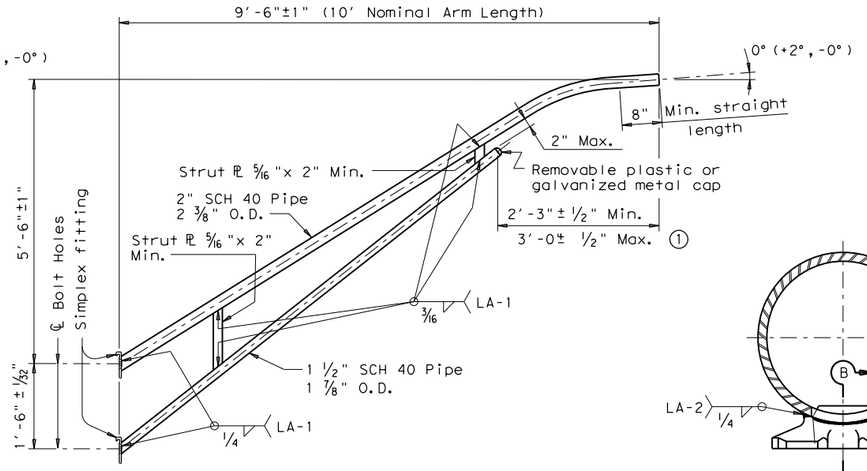

10-FOOT LUMINAIRE ARM

MATERIALS	
Pole or Arm Simplex	ASTM A27 Gr.65-35 or A148 Gr.80-50, A576 Gr.1021 (3), or A36 (Arm only)
Arm Pipes	ASTM A53 Gr.B, A501, A1008 HSLAS-F Gr.50 (4), or A1011 HSLAS-F Gr.50 (4)
Arm Strut Plates (2)	ASTM A36, A572 Gr.50 (4), or A588
Misc.	ASTM designations as noted

(1) Dimensional limits are given to show acceptable variation in design. All of a Fabricator's production of a particular arm length shall have the same dimensions within specified tolerances.

(2) Any of the materials listed for plates may be used where the drawings do not specify a particular ASTM designation.

(3) A576 must be suitable for forging and also meet minimum tensile strength of 65 ksi, minimum yield of 35 ksi, and elongation in 2 inches of 22 percent.

(4) ASTM A572, A1008 HSLAS-F, and A1011 HSLAS-F may have higher yield strengths but shall not have less elongation than the grade indicated.

DIRECT ATTACHMENT DETAIL

GENERAL NOTES:

Design conforms to 1994 AASHTO Standard Specifications for Structural Supports for Highway Signs, Luminaires, and Traffic Signals and Interim Revisions thereto. Design Wind Speed equals 90 mph plus a 1.3 gust factor. Arms are designed to support a 60 lb. luminaire having an effective projected area (actual area times drag coefficient) of 1.6 sq. ft.

Materials and fabrication shall be in accordance with Item 686, "Traffic Signal Pole Assemblies (Steel)" and with the details, dimensions, and weld procedures shown herein. Weld references call for preapproved weld procedures which the Fabricator must obtain prior to fabrication. In the absense of specified Fabricaton tolerances, dimensions shall be within the tolerances generally obtainable in normal fabrication practice.

Unless otherwise noted, all parts shall be galvanized after fabrication in accordance with Item 445, "Galvanizing".

Deviation from the details and dimensions shown herein require submission of shop drawings in accordance with Item 441, "Steel Structures". Alternate designs are not acceptable.

Each pole simplex fitting shall be supplied with 2 ASTM A325 bolts and 2 lock washers of the size specified. The bolts and lock washers shall be secured to the pole with the other hardware items called for in the plans. When clamp attachment is specified, the Fabricator shall ship the clamp assembly securely attached to the pole at the location shown on the plans.

If clamp assemblies are ordered without poles, the Fabricator shall ship one upper and one lower clamp assembly together in a single package, including all nuts and washers required for the clamps and simplex fittings.

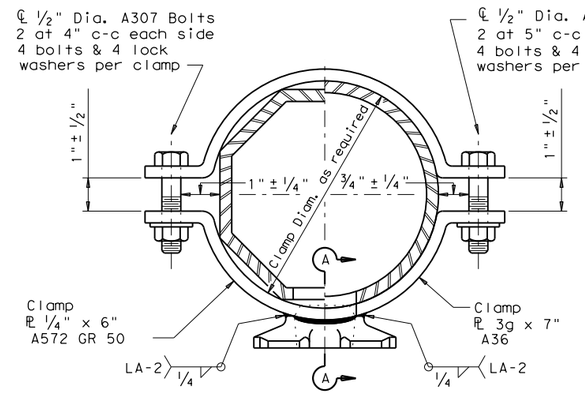

CLAMP ATTACHMENT DETAIL NO. 1 (HALF SECTION)

CLAMP ATTACHMENT DETAIL NO. 2 (HALF SECTION)

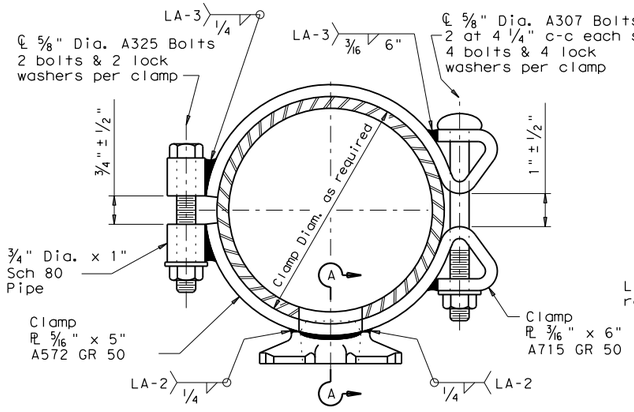

CLAMP ATTACHMENT DETAIL NO. 3 (HALF SECTION)

CLAMP ATTACHMENT DETAIL NO. 4 (HALF SECTION)

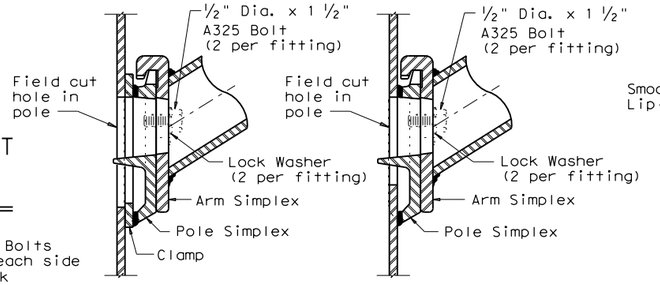

UPPER SIMPLEX FITTING

UPPER SIMPLEX FITTING

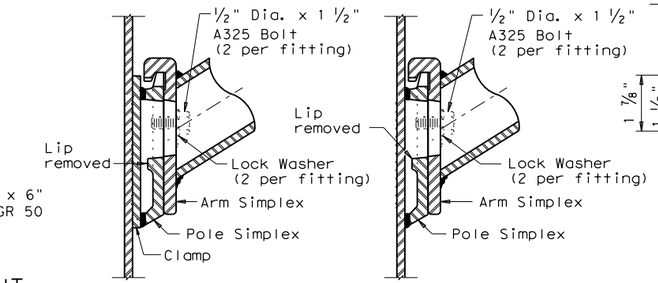

LOWER SIMPLEX FITTING

LOWER SIMPLEX FITTING

SECTON A-A

SECTON B-B

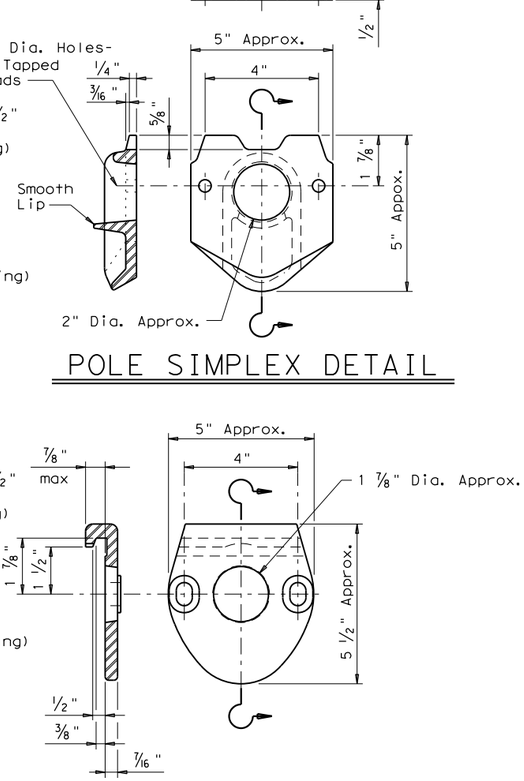

POLE SIMPLEX DETAIL

ARM SIMPLEX DETAIL

Texas Department of Transportation
Traffic Operations Division

STANDARD ASSEMBLY DRAWINGS FOR LUMINAIRE SUPPORT STRUCTURES

ARM DETAILS

LUM-A-12

© TxDOT August 1995

DN: LEH	CK: JSY	DW: LTT	CK: TEB

REVISIONS: 5-96, 1-99, 1-12

CONT	SECT	JOB	HIGHWAY
0337	01	053	SH 29

DIST	COUNTY	SHEET NO.
AUS	WILLIAMSON	210

DATE: 12/18/2025 2:42:33 PM
FILE: LUM-A-12.dgn

DISCLAIMER: The use of this standard is governed by the "Texas Engineering Practice Act". No warranty of any kind is made by TxDOT for any purpose whatsoever. TxDOT assumes no responsibility for the conversion of this standard to other formats or for incorrect results or damages resulting from its use.

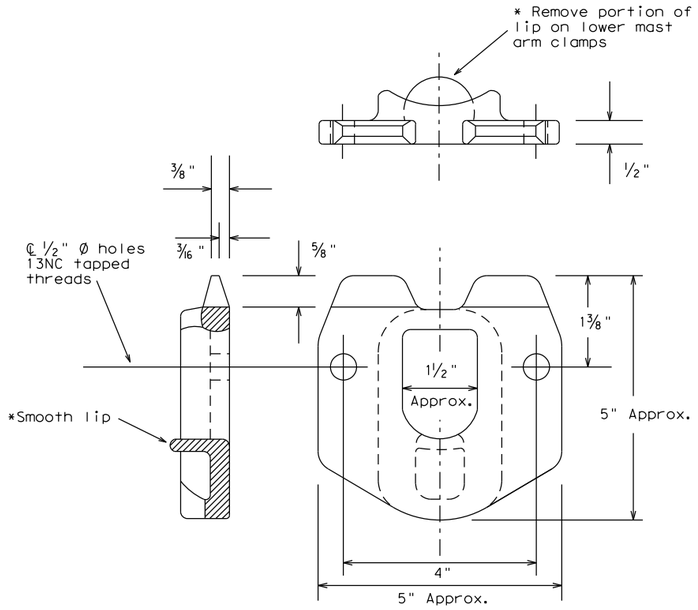

POLE SIMPLEX DETAILS

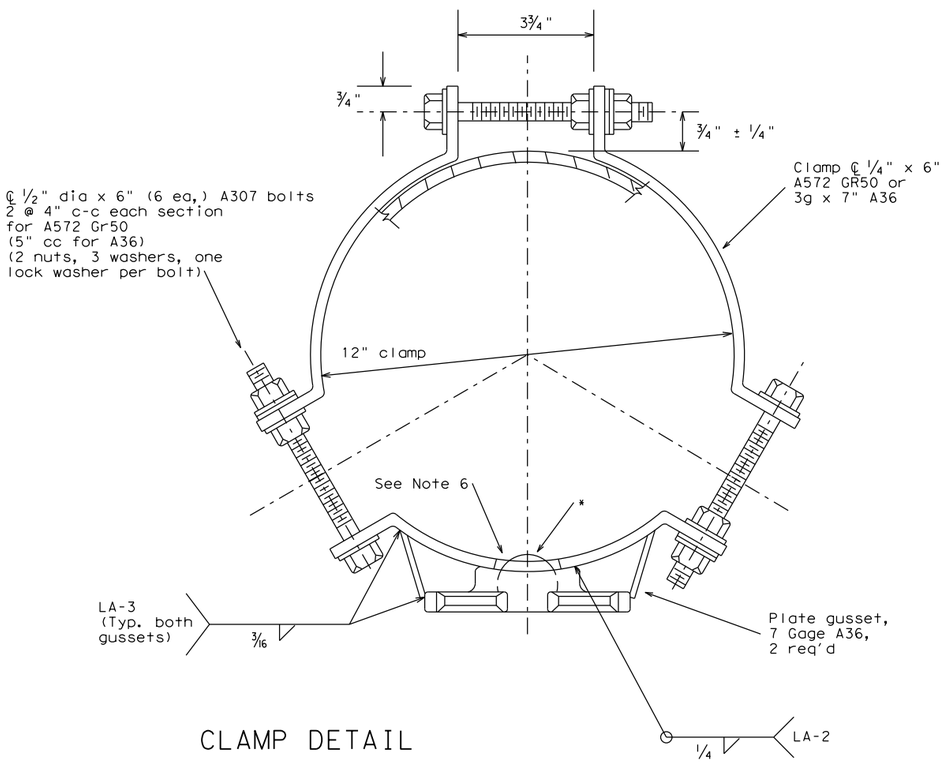

CLAMP DETAIL

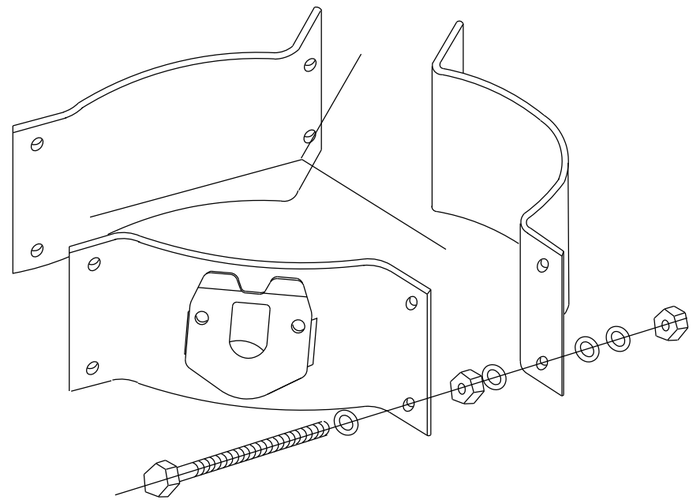

PROJECTION

OTHER MATERIALS:

1. Pole simplex shall be ASTM A27 GR65-35 or A148 GR80-50 or A576 GR1021. ASTM A576 must be suitable for forging and also meet minimum tensile of 65ksi, minimum yield of 35ksi, and a minimum elongation of 22 percent in 2 inches.
2. Welded tabs and backplates shall be ASTM A-36 steel or better.
3. Nylon insert locknuts shall conform to ASTM A563.

GENERAL NOTES:

1. Materials and fabrication shall be in accordance with Standard Sheet "MA-C" and with the details, dimensions, and weld procedures shown herein. Weld references call for preapproved weld procedures which the Fabricator must obtain prior to fabrication. In the absence of specified fabrication tolerances, dimensions shall be within the tolerances generally obtainable in normal fabrication practice.
2. All parts shall be galvanized after fabrication in accordance with Item 445, "Galvanizing". The throat of the Simplex shall be made free of all rough or sharp edges resulting from the galvanizing process.
3. Each simplex fitting shall be supplied with 2 ASTM A325 bolts, 1/2in. X 1 1/2in. and 2 lock washers. The bolts and lock washers shall be secured to the clamp with the other hardware items. The Fabricator shall ship clamp assembly together in a single package, including all bolts, nuts, and washers required for the clamp and simplex fitting.
4. Design conforms to 1994 AASHTO "Standard Specifications for Structural Supports for Highway Signs, Luminaires, and Traffic Signals" and interim revisions thereto. Design Wind Speed equals 80 mph plus a 1.3 gust factor. Clamps are designed to support a 60 lb. luminaire having an effective projected area (actual area times drag coefficient) of 1.6 sq.ft.,12 ft. maximum arm length.
5. Each assembly shall consist of one upper piece simplex fitting having a smooth lip and one lower piece simplex fitting with the lip removed.
6. Approximately 2 in. diameter hole in upper mast arm clamp.

For 8.9 - 12 inch diameter Signal Poles
(Two req'd for each mast arm)

Texas Department of Transportation
Traffic Operations Division

CLAMP ON FITTING ASSEMBLY FOR LUMINAIRE MAST ARM

CFA-12

© TxDOT

DN: KAB	CK: RES	DW: FDN	CK: CAL

REVISIONS
11-99
1-12

CONT	SECT	JOB	HIGHWAY
0337	01	053	SH 29
DIST	COUNTY		SHEET NO.
AUS	WILLIAMSON		211

DATE: 12/18/2025 2:42:51 PM
FILE: CFA-12.dgn

DISCLAIMER:
The use of this standard is governed by the "Texas Engineering Practice Act". No warranty of any kind is made by TxDOT for any purpose whatsoever. TxDOT assumes no responsibility for the conversion of this standard to other formats or for incorrect results or damages resulting from its use.

DATE: 12/18/2025 2:43:18 PM
FILE: TS-BP-20.dgn

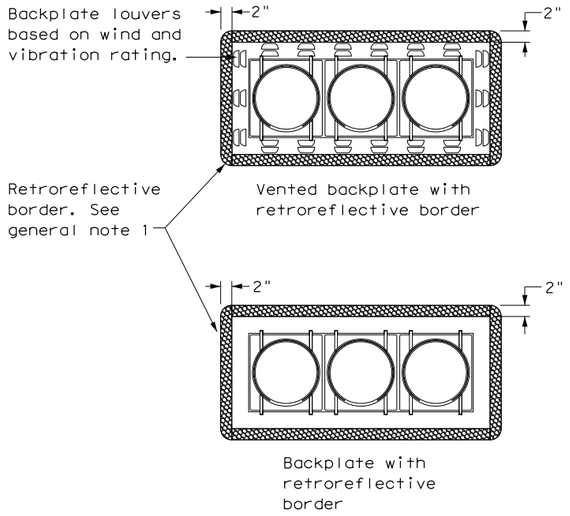

THREE-SECTION HEAD
HORIZONTAL OR VERTICAL

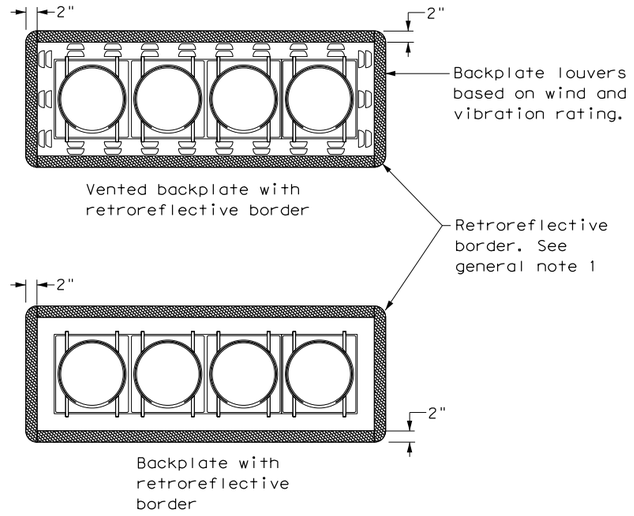

FOUR-SECTION HEAD
HORIZONTAL OR VERTICAL

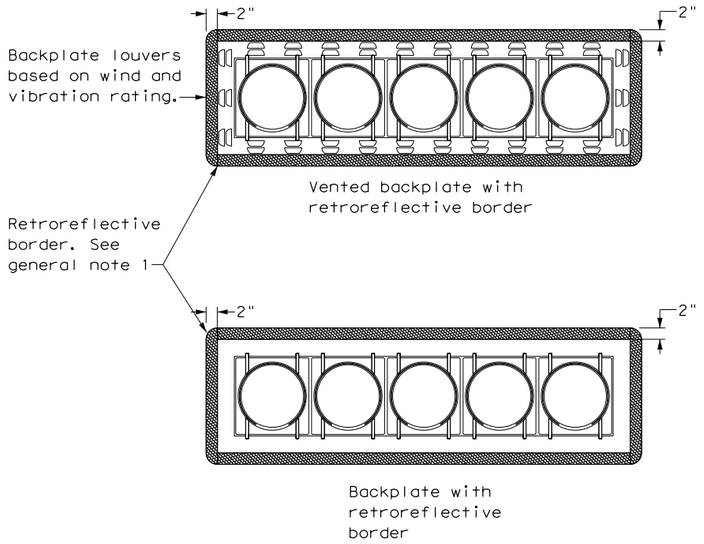

FIVE-SECTION HEAD
HORIZONTAL OR VERTICAL

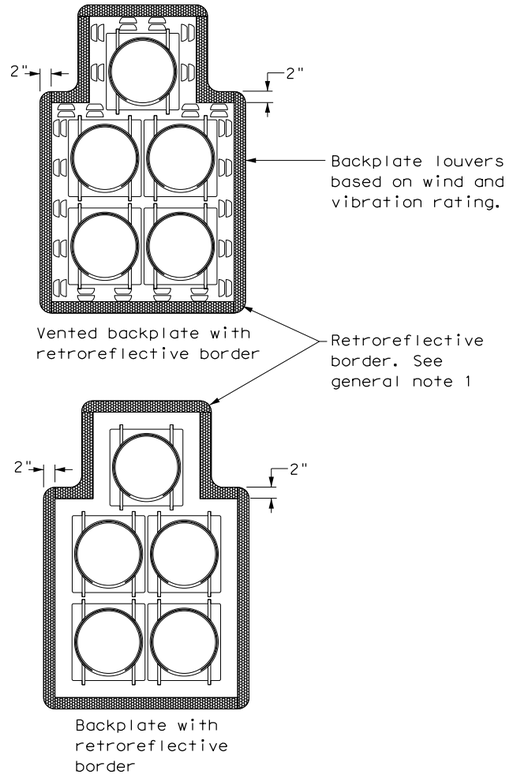

FIVE-SECTION HEAD
CLUSTER

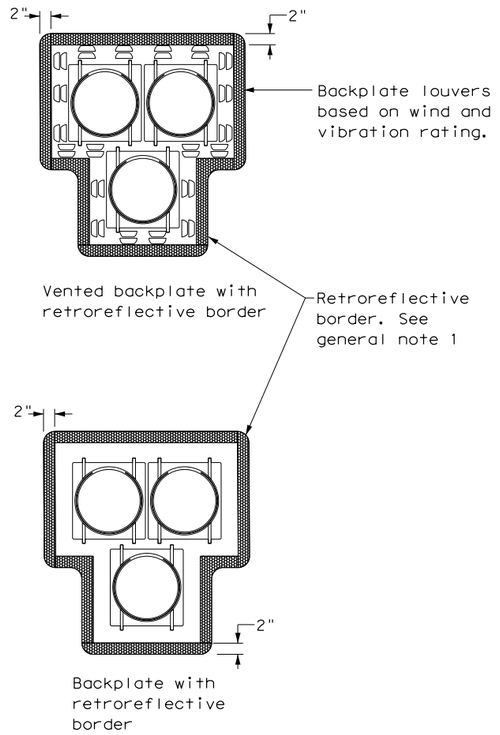

PEDESTRIAN HYBRID
BEACON

GENERAL NOTES:

1. Backplates are optional for traffic signals and pedestrian hybrid beacons. When backplates are used, a 2-inch wide fluorescent yellow AASHTO Type B_{FL} or C_{FL} retroreflective border conforming to TxDOT DMS-8300 is required. Place on all approaches when used.
2. Signal head and backplate compatability must be verified by the contractor prior to installation.
3. When using backplates on signal heads, venting is preferred to reduce cyclic vibration stress.
4. When a vented backplate is used, the retroreflective border must not be placed over the louvers.
5. This standard sheet applies to all signal heads with backplates, including but not limited to:
   - Pole mounted
   - Overhead mounted
   - Span wire mounted
   - Mast arm mounted
   - Vertical signal heads
   - Horizontal signal heads
   - Clustered signal heads
   - Pedestrian hybrid beacons

Texas Department of Transportation

Traffic Safety Division Standard

TRAFFIC SIGNAL HEAD WITH BACKPLATE

TS-BP-20

FILE: ts-bp-20.dgn	DN: TxDOT	CK: TxDOT	DW: TxDOT	CK: TxDOT
©TxDOT June 2020	CONT	SECT	JOB	HIGHWAY
REVISIONS	0337	01	053	SH 29
	DIST	COUNTY		SHEET NO.
	AUS	WILLIAMSON		212

DISCLAIMER:
The use of this standard is governed by the "Texas Engineering Practice Act". No warranty of any kind is made by TxDOT for any purpose whatsoever. TxDOT assumes no responsibility for the conversion of this standard to other formats or for incorrect results or damages resulting from its use.

DATE: 12/18/2025 2:43:37 PM
FILE: pw://kh-pw.bentley.com:kh-pw-01/Documents/01 Active Projects/TX-GEO-069284005 - SH 29 Widen/4 to 6 LN/ilsn-25.dgn

ILSN SIGN

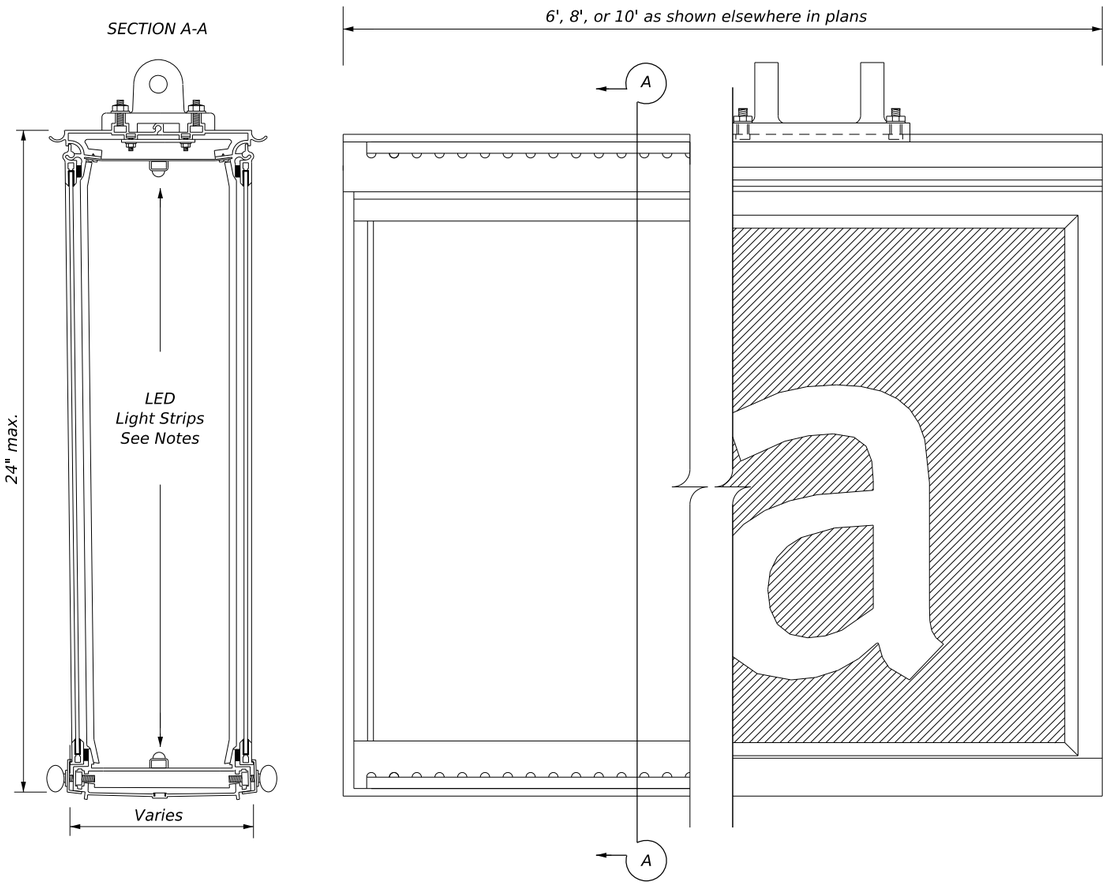

SIGN MOUNTING

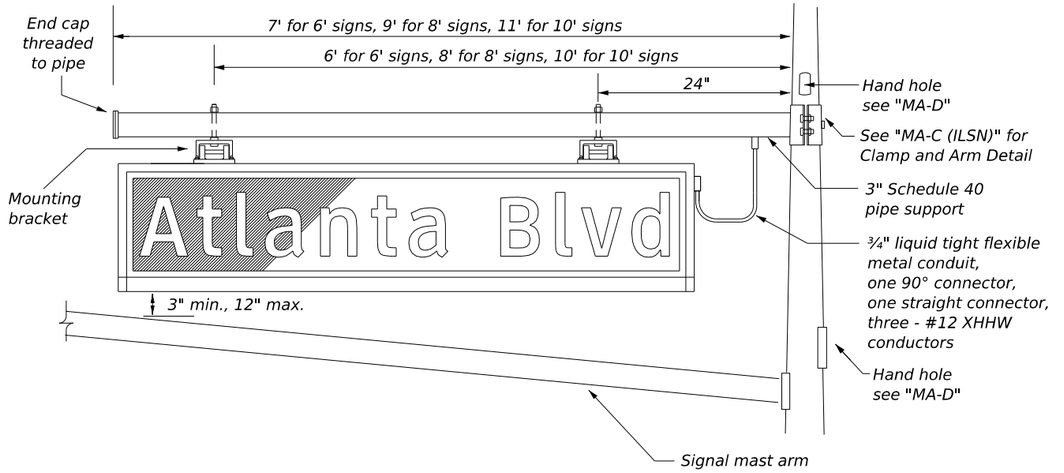

MOUNTING BRACKET

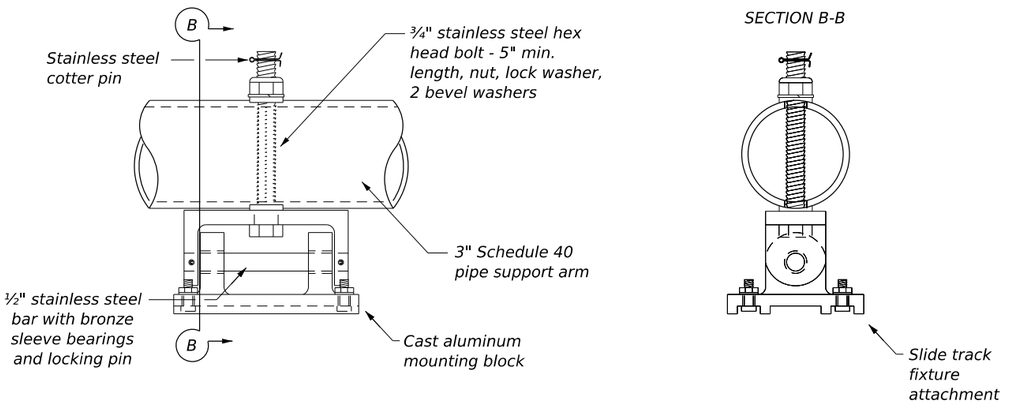

ILSN SIGN NOTES:

1. The maximum area of the sign shall not exceed 20 sq.ft.
2. Sign message shall be as shown elsewhere in the plans.
3. See Special Specification, "LED Internally Lighted Street Name Signs" for additional details.
4. Ensure letter font type and letter height are in accordance with the Standard Highway Sign Designs for Texas, D3-1 Overhead Mount.
5. Sign housing and LED configuration may vary by manufacturer.

ILSN SIGN BID ITEM DESCRIPTIONS

ILSN (X X)

INTERNALLY LIGHTED STREET NAME SIGN

SIGN LENGTH
- 6 = 6 ft.
- 8 = 8 ft.
- 10 = 10 ft.

FACES
- S = Single
- D = Double

Texas Department of Transportation

Traffic Safety Division Standard

INTERNALLY LIGHTED STREET NAME (ILSN) SIGN

ILSN-25

FILE: ilsn-25.dgn	DN: TxDOT	CK: TxDOT	DW: TxDOT	CK: TxDOT
©TxDOT March 2025	CONT	SECT	JOB	HIGHWAY
REVISIONS	0337	01	053	SH 29
8-95 3-25	DIST	COUNTY		SHEET NO.
	AUS	WILLIAMSON		213

DISCLAIMER: The use of this standard is governed by the "Texas Engineering Practice Act". No warranty of any kind is made by TxDOT for any purpose whatsoever. TxDOT assumes no responsibility for the conversion of this standard to other formats or for incorrect results or damages resulting from its use.

FOUNDATION DESIGN TABLE

FDN TYPE	DRILLED SHAFT DIA	REINFORCING STEEL		EMBEDDED DRILLED SHAFT LENGTH-ft ④, ⑤, ⑥			ANCHOR BOLT DESIGN ①				FOUNDATION DESIGN LOAD ②		TYPICAL APPLICATION
		VERT BARS	SPIRAL & PITCH	TEXAS CONE PENETROMETER N blows/ft			ANCHOR BOLT DIA	Fy (ksi)	BOLT CIR DIA	ANCHOR TYPE	MOMENT K-ft	SHEAR Kips	
				10	15	40							
24-A	24"	4- #5	#2 at 12"	5.7	5.3	4.5	¾"	36	12 ¾"	1	10	1	Pedestal pole, pedestal mounted controller.
30-A	30"	8- #9	#3 at 6"	11.3	10.3	8.0	1 ½"	55	17"	2	87	3	Mast arm assembly. (see Selection Table)
36-A	36"	10- #9	#3 at 6"	13.2	12.0	9.4	1 ¾"	55	19"	2	131	5	Mast arm assembly. (see Selection Table) 30' strain pole with or without luminaire.
36-B	36"	12- #9	#3 at 6"	15.2	13.6	10.4	2"	55	21"	2	190	7	Mast arm assembly. (see Selection Table) Strain pole taller than 30' & strain pole with mast arm
42-A	42"	14- #9	#3 at 6"	17.4	15.6	11.9	2 ¼"	55	23"	2	271	9	Mast arm assembly. (see Selection Table)

NOTES:

① Anchor bolt design develops the foundation capacity given under Foundation Design Loads.

② Foundation Design Loads are the allowable moments and shears at the base of the structure.

③ Foundations may be listed separately or grouped according to similarity of location and type. Quantities are for the Contractor's information only.

④ Field Penetrometer readings at a depth of approximately 3 to 5 feet may be used to adjust shaft lengths.

⑤ If rock is encountered, the Drilled Shaft shall extend a minimum of two diameters into solid rock.

⑥ Decimal lengths in Design Table are to allow interpolation for other penetrometer values. Round to nearest foot for entry into Summary Table.

FOUNDATION SUMMARY TABLE ③

LOCATION IDENTIFICATION	AVG. N BLOW /ft.	FDN TYPE	NO. EA	DRILLED SHAFT LENGTH ⑥ (FEET)				
				24-A	30-A	36-A	36-B	42-A
WOLF RANCH: POLE E	10	24-A	1	6				
WOLF RANCH: POLE F	SPREAD FOOTING (SEE DETAILS)							
WOLF RANCH: POLE G	SPREAD FOOTING (SEE DETAILS)							
WOLF RANCH: POLE H	10	24-A	1	6				
WOLF RANCH: POLE J	10	24-A	1	6				
WOLF LAKES: POLE E	10	24-A	1	6				
WOLF LAKES: POLE F	10	24-A	1	6				
WOLF LAKES: POLE G	SPREAD FOOTING (SEE DETAILS)							
WOLF LAKES: POLE H	10	24-A	1	6				
WOLF LAKES: POLE I	10	24-A	1	6				
I-35: POLE A	10	36-A	1			13		
I-35: POLE C	10	24-A	1	6				
TOTAL DRILLED SHAFT LENGTHS				48		13		

FOUNDATION SELECTION TABLE FOR STANDARD MAST ARM PLUS ILSN SUPPORT ASSEMBLIES (ft)

		FDN 30-A	FDN 36-A	FDN 36-B	FDN 42-A
80 MPH DESIGN WIND SPEED	MAX SINGLE ARM LENGTH	32'	48'		
	MAXIMUM DOUBLE ARM LENGTH COMBINATIONS	24' X 24'			
		28' X 28'			
		32' X 28'	32' X 32'		
			36' X 36'		
			40' X 36'		
			44' X 28'	44' X 36'	
100 MPH DESIGN WIND SPEED	MAX SINGLE ARM LENGTH		36'	44'	
	MAXIMUM DOUBLE ARM LENGTH COMBINATIONS		24' X 24'		
			28' X 28'		
			32' X 24'	32' X 32'	
				36' X 36'	
				40' x24'	40' X 36'
					44' x 36'

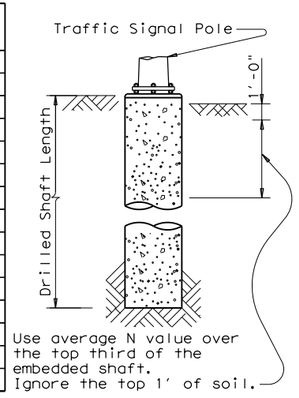

ANCHOR BOLT & TEMPLATE SIZES

BOLT DIA IN.	⑦ BOLT LENGTH	TOP THREAD	BOTTOM THREAD	BOLT CIRCLE	R2	R1
¾"	1'-6"	3"	—	12 ¾"	7 ⅛"	5 ⅝"
1 ½"	3'-4"	6"	4"	17"	10"	7"
1 ¾"	3'-10"	7"	4 ½"	19"	11 ¼"	7 ¾"
2"	4'-3"	8"	5"	21"	12 ½"	8 ½"
2 ¼"	4'-9"	9"	5 ½"	23"	13 ¾"	9 ¼"

⑦ Min dimensions given, longer bolts are acceptable.

GENERAL NOTES:

Design conforms to 1994 AASHTO Standard Specifications for Structural Supports for Highway Signs, Luminaires and Traffic Signals and interim revisions thereto.

Reinforcing steel shall conform to Item 440, "Reinforcing Steel".

Concrete shall be Class "C".

Threads for anchor bolts and nuts shall be rolled or cut threads of 8UN series up to 2" in diameter or UNC series for all sizes. Bolts and nuts shall have Class 2A and 2B fit tolerances. Galvanized nuts shall be tapped after galvanizing.

Anchor bolts that are larger than 1" in diameter shall conform to "alloy steel" or "medium-strength mild steel" per Item 449, "Anchor Bolts". Anchor bolts that are 1" in diameter or less shall conform to ASTM A36. Galvanize a minimum of the top end thread length plus 6" for all anchor bolts unless otherwise noted. Exposed washers and exposed nuts shall be galvanized. All galvanizing shall be in accordance with Item 445, "Galvanizing".

Templates and embedded nuts need not be galvanized. Lubricate and tighten anchor bolts when erecting the structure in accordance with Item 449, "Anchor Bolts".

EXAMPLE:
1. For 80mph design wind speed, foundation 30-A can support up to a 32' arm with another arm up to 28'
2. For 100mph design wind speed, foundation 36-A can support a single 36' mast arm.

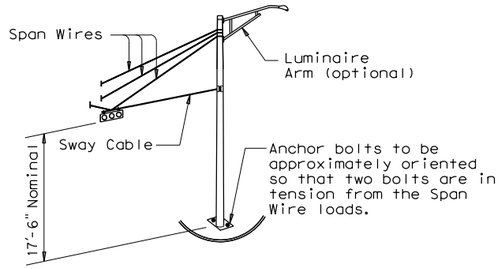

TYPICAL STRAIN POLE ASSEMBLY

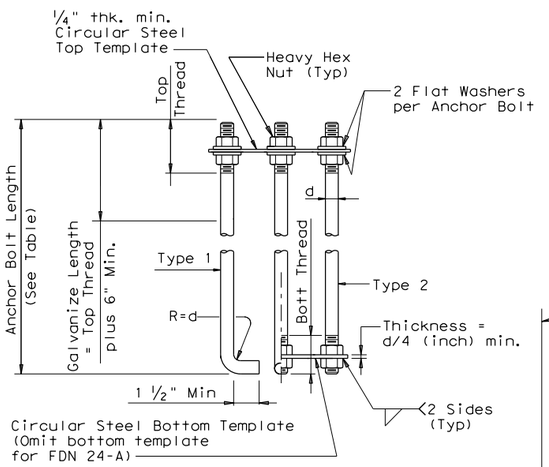

ANCHOR BOLT ASSEMBLY

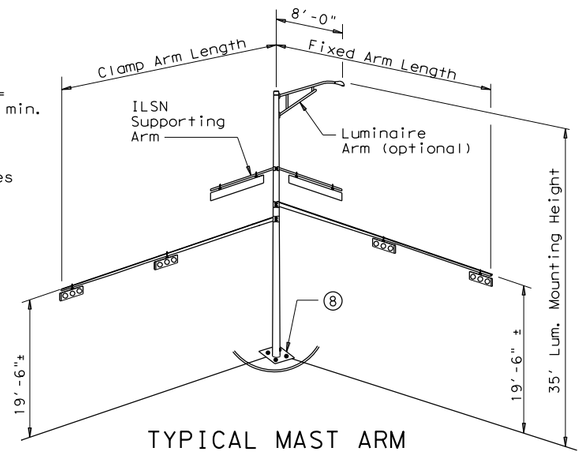

TYPICAL MAST ARM ASSEMBLY

⑧ Orient anchor bolts orthogonal with the fixed arm direction to ensure that two bolts are in tension under dead load.

FOUNDATION DETAILS

STATE OF TEXAS
MATTHEW A. GAAL
140753
LICENSED
PROFESSIONAL ENGINEER

Matthew Gaal
9/24/2025

Texas Department of Transportation
Traffic Operations Division

TRAFFIC SIGNAL POLE FOUNDATION

TS-FD-12

© TxDOT August 1995	DN: MS	CK: JSY	DW: MAO/MMF	CK: JSY/TEB
REVISIONS	CONT	SECT	JOB	HIGHWAY
5-96 11-99 1-12	0337	01	053	SH 29
	DIST	COUNTY		SHEET NO.
	AUS	WILLIAMSON		214

128

DATE: 9/24/2025 7:56:56 PM
FILE: TS-FD-12.dgn

DISCLAIMER:
The use of this standard is governed by the "Texas Engineering Practice Act". No warranty of any kind is made by TxDOT for any purpose whatsoever. TxDOT assumes no responsibility for the conversion of this standard to other formats or for incorrect results or damages resulting from its use.

NOTE: Structures north of ice line to be designed for ice.

ZONE 2
(90 MPH WIND)

ZONE 3
(80 MPH WIND)

ZONE 4
(70 MPH WIND)

ICE LINE

ZONE 4
(70 MPH WIND)

ICE LINE

ZONE 3
(80 MPH WIND)

ZONE 1
(100 MPH WIND)

LEGEND

ZONE 1 - = (100 MPH WIND)
ZONE 2 - = (90 MPH WIND)
ZONE 3 - = (80 MPH WIND)
ZONE 4 - = (70 MPH WIND)
= (ICE LINE)
= (DISTRICT LINES)

APPLICABLE STANDARDS SHEETS

OVERHEAD SIGN BRIDGE STANDARDS:

OSB-SE
OSB-Z#
OSB-Z#1
HOSB-Z#
HOSB-Z1L
HOSB-Z#1
OSBT
OSBC
OSBC-SC-Z#
OSBS-SC
OSB-FD
OSB-FD-SC

CANTILEVER OVERHEAD SIGN SUPPORT STANDARDS:

COSS-SE
COSS-Z#-10
HCOSS-Z#-10
COSS-Z21-10
COSS-Z#&Z#1-10
COSSD
COSSF
COSS-FD

Note: # = Wind Zone number 1, 2, 3 or 4

HIGH MAST ILLUMINATION POLE STANDARDS:

HMIP-98
HMIF-98

WALKWAYS AND BRACKETS STANDARDS:

SWW
SB(SWL-1)

TRAFFIC SIGNAL POLE STANDARDS:

SP-80
SP-100
SMA-80
SMA-100
DMA-80
DMA-100
MA-C
MAC(ILSN)
MAD-D
TS-FD
LUM-A
CFA
LMA
TS-C
MA-DPD

FOR HARRIS CO. ONLY
Zone line is just North of US 90, around on the North, West and South sides of IH 610 and down the West side of SH 288.

FOR JACKSON CO. ONLY
Zone line is just North of SH 616.

WIND VELOCITY & ICE ZONES FOR APPLICABLE OVERHEAD SIGN SUPPORTS, HIGH MAST POLES, AND TRAFFIC SIGNAL POLES

Based on 50 Year Mean Recurrence Interval of Fastest Mile Wind Velocity at 33 feet height.

THIS SHEET TO BE INCLUDED IN ALL P.S.&E. PACKAGES CONTAINING ONE OR MORE OF THE APPLICABLE STANDARD SHEETS LISTED HEREON

Texas Department of Transportation

Traffic Operations Division Standard

WIND VELOCITY AND ICE ZONES

WV & IZ-14

FILE: windice.dgn	DN: TxDOT	CK: TxDOT	DW: TxDOT	CK: TxDOT
© TxDOT April 1996	CONT	SECT	JOB	HIGHWAY
REVISIONS	0337	01	053	SH 29
8-14-Added list of applicable standards, restricting use to structures designed for Fastest Mile wind speeds.	DIST	COUNTY		SHEET NO.
	AUS	WILLIAMSON		215

30

DATE: 12/18/2025 2:44:22 PM
FILE: WV&IZ-14.dgn

DISCLAIMER:
The use of this standard is governed by the "Texas Engineering Practice Act". No warranty of any kind is made by TxDOT for any purpose whatsoever. TxDOT assumes no responsibility for the conversion of this standard to other formats or for incorrect results or damages resulting from its use.

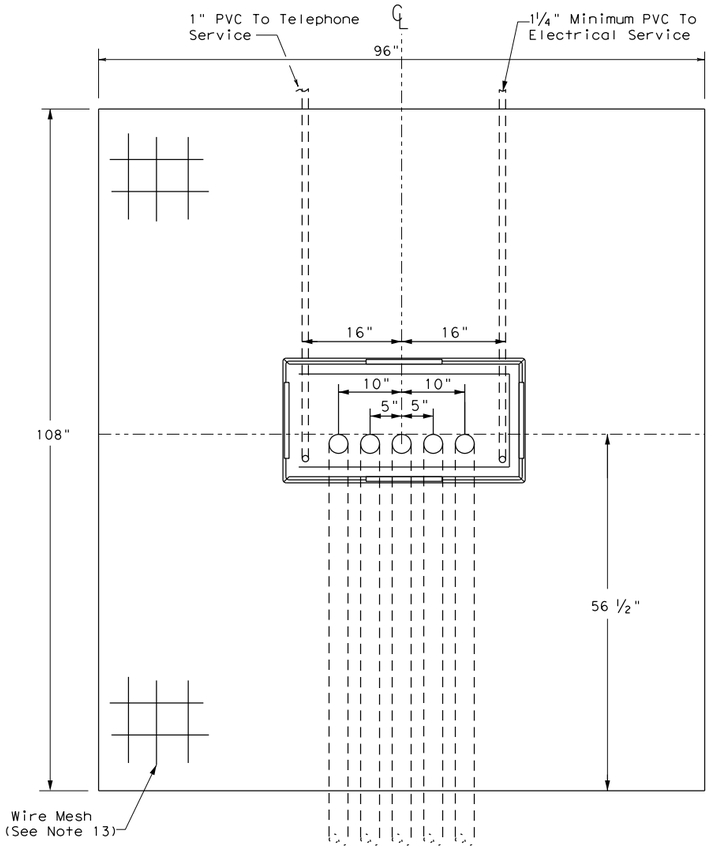

TOP VIEW

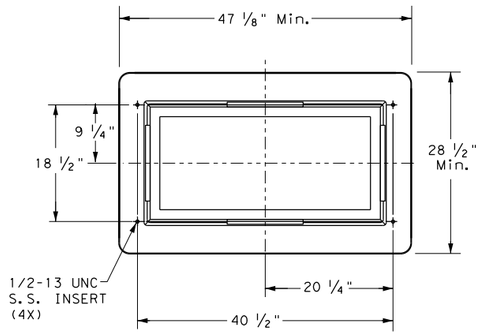

CABINET BASE

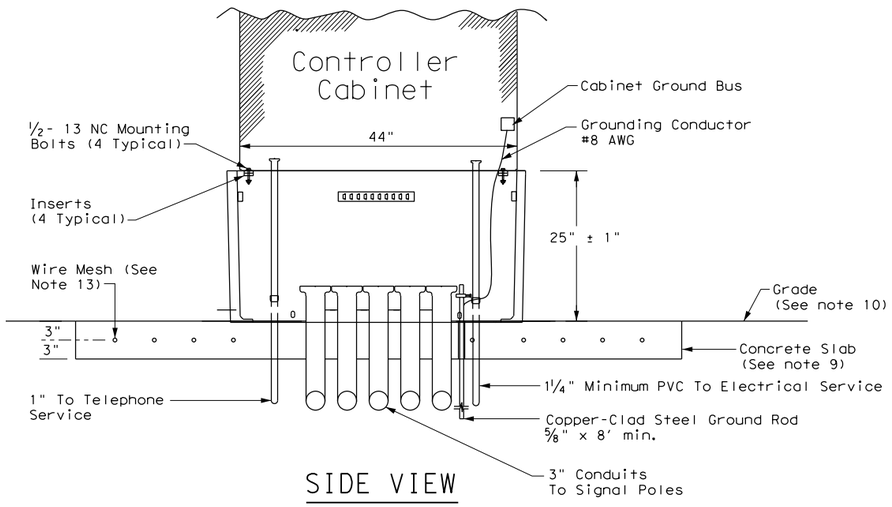

SIDE VIEW

TRAFFIC SIGNAL CONTROLLER BASE:

1. Provide a traffic signal controller base (cabinet base) manufactured of polymer concrete material consisting of calcareous and siliceous stone; glass fibers and thermoset polyester resin. The polymer concrete cabinet base must be reinforced on the inside of the cabinet base with fiberglass matting. Provide one of the following bases: Armorcast Part # A6001848X24, Quazite Model # PG3048Z709, or other as approved by TxDOT Traffic Safety Division.
2. The polymer concrete material must have a minimum compressive strength of 10,300 pounds per square inch (psi), minimum flexural strength of 3600 psi, and minimum shear strength of 3600 psi.
3. The polymer concrete cabinet base must conform to the dimensions shown and must accommodate a standard TxDOT basemount cabinet.
4. Supply the cabinet base with four 1#2"-13 UNC stainless steel inserts for attachment of the cabinet to the base. Inserts must withstand a minimum torque of 50 ft-lb and a minimum straight pull out strength of 750 lbs.
5. Provide the cabinet base with 4 cable racks mounted one on each side of the base 2" to 7 " from the top edge of the base. Unless approved otherwise, cable racks must be 1-1/2 x 9#16x 3#16inch steel channel with eight T-slots spaced at 1-1/2 inches. The cable racks must easily accommodate the insertion of tie wraps to attach field wiring to the racks to serve as strain relief. Secure cable racks to the base using 1#2"-13 UNC stainless steel screws and inserts.
6. The cabinet base, when secured to the concrete slab with controller cabinet attached, must withstand a minimum wind load of 125 mph or a 850 lb force applied at 49" above the bottom of the base without causing the base or cabinet to come out of their anchored position or cause any permanent deformation. The manufacturer must supply certification by an independent testing laboratory or sealed by a Texas Licensed Professional Engineer. Provide the cabinet base with hardware for attachment to a concrete slab.
7. The traffic signal base must be permanently marked either by impress or by permanent ink with the manufacturer's model number and name or logo.
8. Seal the base to the concrete with a silicone caulk bead and fastened to the slab per manufacturer's instructions.

CONCRETE SLAB:

9. Traffic signal controller pad must be a portland cement concrete slab poured in place, must conform to the dimensions shown, and must be level.
10. Grade earthwork such that it is flush with the concrete pad on all four sides, unless otherwise shown on the plans. Subsidiary to ITEM 680, four inch rip rap may be used in lieu of earthwork. Slopes shall gradually contour to match plans.
11. Bond a #8 AWG copper ground wire and an 8 ft ground rod bonded to the reinforcing mesh by a suitable UL Listed clamp and terminated to the cabinet grounding bus for the purpose of providing a local ground for the electrical grounding conductor. The electrical grounding conductor specified in Item 680-3.A.4 is required and must be terminated to the cabinet ground bus.
12. Install a PVC sleeve to prevent the ground rod from direct embedment in the slab.
13. Provide welded wire mesh 6X6-W2.9 X W2.9 for reinforcement. Provide joints and splices in the mesh with a minimum 6-inch overlap. Center the mesh between top and bottom and provide a minimum 3 inch cover on the edges.
14. Provide Class B concrete minimum for the slab in accordance with Item 421. Construct the slab in accordance with Item 531.

CONDUITS:

15. Stub up and run 3-inch conduits through the slab to the various traffic signal poles and ground boxes as shown on the layouts. Install the number of conduits as shown on layouts plus two additional 3 inch conduits for future use. Terminate the conduits with a bushing between 2 and 4-inches above the slab.
16. Extend conduits for future use at least 18-inches from the edge of the slab, terminate underground with a coupling, and cap and seal so that the seal can be removed without damaging the coupling. This must also apply to unused telephone conduit.
17. Stub up two separate conduits through the slab from the electrical and telephone services. Run the conduit for the electrical feed directly to the electrical service enclosure. Run the conduit for the telephone line directly to the telephone service, usually located on the same pole as the electrical service. Telephone must not under any circumstance share a conduit with any other function.
18. Terminate electric and telephone conduits above the slab with a coupling. After the base is installed, extend the conduits above the top of the base and secure to the base using a steel one-hole strap or similar suitable substitute.

CONTROLLER CABINET:

19. Anchor the controller cabinet to the base using four stainless steel 1/2-13 NC bolts.
20. The silicone caulk bead specified in Item 680.3.B must be RTV 133.

PAYMENT:

21. Bid TS-CF as subsidiary to Item 680.

Texas Department of Transportation

Traffic Safety Division Standard

TRAFFIC SIGNAL CONTROLLER CABINET BASE AND PAD

TS-CF-21

FILE: ts-cf-21.dgn	DN:	CK:	DW:	CK:
©TxDOT October 2000	CONT	SECT	JOB	HIGHWAY
REVISIONS	0337	01	053	SH 29
12-04	DIST	COUNTY		SHEET NO.
2-21	AUS	WILLIAMSON		216

DATE: 12/18/2025 2:44:43 PM
FILE: TS-CF-21.dgn

DISCLAIMER:
The use of this standard is governed by the "Texas Engineering Practice Act". No warranty of any kind is made by TxDOT for any purpose whatsoever. TxDOT assumes no responsibility for the conversion of this standard to other formats or for incorrect results or damages resulting from its use.

DATE: 12/18/2025 2:45:04 PM
FILE: pw://kh-pw.bentley.com:kh-pw-01/Documents/01 Active Projects/TX-GEO-0336-01-053 SH 29 Williamson County/Roadway Illumination and Electrical Supplies/Standard Sheets/ed1-25.dgn

GENERAL NOTES FOR ALL ELECTRICAL WORK

1. The location of all conduits, junction boxes, ground boxes, and electrical services is diagrammatic and may be shifted to accommodate field conditions.

2. Provide new, unused, and undamaged materials. Ensure that all materials and installations comply with the National Electrical Code (NEC), TxDOT standards and specifications, National Electrical Manufacturers Association (NEMA), and are listed by Underwriters Laboratories (UL) or a Nationally Recognized Testing Lab (NRTL). NRTLs such as CSA Group, Intertek Testing Services, or FM Approvals can be considered equivalent to UL. Where reference is made to NEMA listed devices, International Electrotechnical Commission (IEC) listed devices will not be considered an acceptable equal to NEMA. Faulty fabrication or poor workmanship in any material, equipment, or installation is justification for rejection. Replace or reinstall rejected material or equipment at no additional cost to the Department.

3. Miscellaneous nuts, bolts, and hardware, except for high strength bolts, may be stainless steel when plans specify galvanized, provided the bolt size is 1/2 in. or less in diameter.

4. Provide the following test equipment as required by the Engineer to confirm compliance with the contract and the NEC: voltmeter, ammeter, megohm meter (1000 volt DC), ground resistance tester, torque wrenches, and torque screwdrivers. Ensure all equipment has been properly calibrated within the last year. Provide calibration certification to the Engineer upon request. Operate test equipment during inspection as requested by the Engineer.

5. Install grounding as shown on the plans and in accordance with the NEC. Ensure all metallic conduits, metal poles, luminaires, and metal enclosures are bonded to an equipment grounding conductor. Provide stranded bare copper or green insulated grounding conductors. Ground rods, connectors, and bonding jumpers are subsidiary to the various bid items.

6. When required by the Engineer, notify the Department in writing of materials from the Material Producer List (MPL) intended for use on each project. Prequalified materials are listed on the MPL on TxDOT's website under "Roadway Illumination and Electrical Supplies." No substitutions will be allowed for materials on this list.

CONDUIT

A. MATERIALS

1. Provide conduit, junction boxes, fittings, and hardware per TxDOT Departmental Material Specification DMS-11030, "Conduit" and Item 618, "Conduit" of TxDOT's "Standard Specifications for Construction and Maintenance of Highways, Streets, And Bridges," latest edition. Provide conduits listed under Item 618 on the MPL under "Roadway Illumination and Electrical Supplies." Provide conduit types according to the descriptive code or as shown on the plans. Do not substitute other types of conduits for those shown. Provide Liquidtight Flexible Metal Conduit (LFMC) when flexible conduit is called for on galvanized steel Rigid Metal Conduit (RMC) systems. Provide Liquidtight Flexible Nonmetallic Conduit (LFNC) when flexible conduit is called for on Polyvinyl Chloride (PVC) systems.

2. Provide galvanized steel RMC for all exposed conduits, unless otherwise shown on the plans. Properly bond all metal conduits.

3. Unless otherwise shown on the plans, provide junction boxes with a minimum size as shown in the following table, which applies to the greatest number of conductors entering the box through one conduit with no more than four conduits per box. When a mixture of conductor sizes are present, count the conductors as if all are of the larger size. For situations not applicable to this table, size junction boxes per the NEC.

JUNCTION BOX SIZES

AWG	3 CONDUCTORS	5 CONDUCTORS	7 CONDUCTORS
#1	10" x 10" x 4"	12" x 12" x 4"	16" x 16" x 4"
#2	8" x 8" x 4"	10" x 10" x 4"	12" x 12" x 4"
#4	8" x 8" x 4"	10" x 10" x 4"	10" x 10" x 4"
#6	8" x 8" x 4"	8" x 8" x 4"	10" x 10" x 4"
#8	8" x 8" x 4"	8" x 8" x 4"	8" x 8" x 4"

4. Junction boxes with internal volumes up to 100 cu. in. and that are supported by entering raceways must have threaded entries or hubs identified for the intended purpose and be supported by connection of two or more rigid metal conduits. Secure conduit within 3 ft. of the box or within 18 in. of the box if all conduit entries are on the same side. Mechanically secure all junction boxes with an internal volume greater than 100 cu. in.

5. Provide hot dipped galvanized cast iron or sand cast aluminum outlet boxes for junction boxes containing only 10 AWG or 12 AWG conductors. Do not use die cast aluminum boxes. Size outlet boxes according to the NEC.

6. Do not use Intermediate Metal Conduit (IMC) or Electrical Metallic Tubing (EMT) unless specifically required by the plan sheets. When EMT is called for, provide junction boxes sized as directed above, listed and approved for outdoor use, unless otherwise noted on the plans. Provide junction boxes for IMC conduit systems that meet the same requirements for junction boxes used with RMC systems.

7. Provide PVC junction boxes intended for outdoor use on PVC conduit systems, unless otherwise noted on the plans.

8. Provide PVC elbows, unless otherwise shown in the plans. Use only a flat, high tensile strength polyester fiber pull tape for pulling conductors through the PVC conduit system.

A. MATERIALS (CONTINUED)

9. When galvanized steel RMC elbows are specifically called for in the plans and any portion of the RMC elbow is buried less than 18 in. below grade or bottom of the ground box, ground the RMC elbow with a grounding bushing on a rigid metal extension. Grounding of the rigid metal elbow is not required if the entire RMC elbow is encased in a minimum of 2 in. of concrete. PVC extensions are allowed on these concrete encased rigid metal elbows. Elbows are subsidiary to various bid items.

10. When required, provide High-Density Polyethylene (HDPE) conduit with factory installed internal conductors according to DMS-11060, "Duct Cable." At the Contractor's request and with approval by the Engineer, substitute HDPE conduit with no conductors according to DMS-11030 for PVC conduit bid under Item 618. Provide conduit of the size and schedule as shown on the plans. Do not extend HDPE conduit into ground boxes or foundations. Provide PVC elbows at all ground boxes and foundations.

11. Use two-hole straps or strut straps when supporting 2 in. and larger conduits. On electrical service poles, properly sized stainless steel or hot dipped galvanized strut straps or stand-off straps are allowed on the service riser conduit.

B. CONSTRUCTION METHODS

1. Provide and install expansion joint conduit fittings on all structure-mounted conduits at the structure's expansion joints to allow for movement of the conduit. In addition, provide and install expansion joint fittings on all continuous runs of galvanized steel RMC conduit externally exposed on structures such as bridges at maximum intervals of 150 ft. When requested by the project Engineer, supply manufacturer's specification sheet for expansion joint conduit fittings. Repair or replace expansion joint fittings that do not allow for movement at no additional cost to the Department. Provide the method of determining the amount of expansion to the Engineer upon request. Do not use LFMC or LFNC as a substitute for the required expansion conduit fittings.

2. Space all conduit supports at maximum intervals of 5 ft. Install conduit spacers when attaching metal conduit to surfaces of concrete structures. See "Conduit Mounting Options" on ED(2). Install conduit supports within 3 ft. of all enclosures and conduit terminations.

3. Do not attach conduit supports directly to pre-stressed concrete beams, except as shown specifically in the plans or as approved by the Engineer.

4. Unless otherwise shown on the plans, jack or bore conduit placed beneath existing roadways, driveways, sidewalks, or after the base or surfacing operation has begun. Backfill and compact the bore pits below the conduit per Item 476 "Jacking, Boring, or Tunneling Pipe or Box" prior to installing conduit or duct cable to prevent bending of the connections.

5. When placing conduit in the subgrade of new roadways, backfill all trenches with excavated material unless otherwise noted on the plans. When placing conduit in the subbase of new roadways, backfill all trenches with cement-stabilized base as per requirements of Items: 110, "Excavation;" 400, "Excavation and Backfill for Structures;" 401, "Flowable Backfill;" 402, "Trench Excavation Protection;" and 403, "Temporary Special Shoring."

6. During construction, temporarily cap or plug open ends of all conduit and raceways immediately after installation to prevent entry of dirt, debris and animals. Temporary caps constructed of durable duct tape are allowed. Tightly affix the tape to the conduit opening. Clean out the conduit and prove it clear in accordance with Item 618 prior to installing any conductors.

7. Ensure conduit entry into the top of an enclosure is waterproof by installing conduit sealing hubs or using boxes with threaded bosses. This includes surface mounted safety switches, meter cans, service enclosures, auxiliary enclosures and junction boxes. Grounding bushings on water tight sealing hubs are not required.

8. Fit the ends of all PVC conduit terminations with bushings or bell end fittings. Provide and install a grounding bushing on all metal conduit terminations.

9. Install a bonding jumper from each grounding bushing to the nearest ground rod, grounding lug, or equipment grounding conductor. Ensure all bonding jumpers are the same size as the equipment grounding conductor. Bonding of conduit used as a casing under roadways for duct cable is not required, if the duct extends the full length through the casing.

10. Place conduits entering ground boxes so that the conduit openings are between 3 in. and 6 in. from the bottom of the box. See the ground box detail on sheet ED(4).

11. After completion of conductor installation, immediately seal ends of all conduits emerging from ground with duct seal, expandable foam, or other methods approved by the Engineer. Do not use silicone caulking. Do not use duct tape as a permanent seal.

12. File smooth the cut ends of all mounting strut and conduit. To avoid overspray, paint the field cut ends of all mounting strut and RMC (threaded or non-threaded) with zinc rich paint (94% min. zinc content as specified on DMS-8103 and listed on the MPL for Galvanizing Repair Paints) before installing. Use zinc rich paint to touch up galvanized material as allowed under Item 445 "Galvanizing." Do not paint non-galvanized material with zinc rich paint as an alternative for materials required to be galvanized.

13. For all conduits, ensure the burial depth is 18" min. For conduits placed under a roadway, ensure the burial depth is 24" min.

Texas Department of Transportation

Traffic Safety Division Standard

ELECTRICAL DETAILS CONDUITS & NOTES

ED(1)-25

FILE:	ed1-25.dgn	DN: TxDOT	CK: TxDOT	DW: TxDOT	CK: TxDOT
©TxDOT	April 2025	CONT	SECT	JOB	HIGHWAY
REVISIONS		0337	01	053	SH 29
1-92 3-03 4-25 4-98 5-03 12-00 10-14		DIST	COUNTY		SHEET NO.
		AUS	WILLIAMSON		217

71A

DISCLAIMER:
The use of this standard is governed by the "Texas Engineering Practice Act". No warranty of any kind is made by TxDOT for any purpose whatsoever. TxDOT assumes no responsibility for the conversion of this standard to other formats or for incorrect results or damages resulting from its use.
DATE: 12/18/2025 2:45:26 PM
FILE: pw://kh-pw.bentley.com:kh-pw-01/Documents/01 Active Projects/TX-GEO-000265 - TxDOT Standards 2025/Working/ed3-25.dgn

ELECTRICAL CONDUCTORS

A. MATERIAL INFORMATION

1. Provide Type XHHW insulated copper conductors in accordance with Departmental Material Specification DMS-11040, "Conductors" and Item 620, "Electrical Conductors." Provide conductors as listed on the Material Producer List (MPL) on the Department web site under "Roadway Illumination and Electrical Supplies" Item 620.

2. Identify grounded (neutral) conductors with white insulation. Identify grounding conductors (ground wires) with green insulation or bare conductors. Identify ungrounded (hot) conductors with any color insulation except green, white, or gray. Keep color scheme consistent throughout the wiring system. Identify conductors 6 American Wire Gauge (AWG) and smaller by continuous color jacket. Identify electrical conductors 4 AWG and larger by continuous color jacket or by colored tape. When identifying conductors with colored tape, mark at least 6 in. of the conductor's insulation with half laps of tape at each accessible location.

3. Insulated grounding conductors may be substituted for bare conductors, unless otherwise shown in the plans. Insulated grounding conductors must be color coded green in accordance with Note 2.

4. Provide a 6 AWG bare solid copper grounding electrode conductor to bond the electrical service equipment to the concrete encased grounding electrode or the ground rod at the service location. Connect the grounding electrode conductor to the ground rod with a UL listed connector in accordance with DMS-11040. Connect the grounding electrode conductor to the concrete encased grounding electrode as shown in the plans.

5. Where two or more circuits are present in one conduit or enclosure, permanently label the conductors of each branch circuit by attaching a non-metallic, weather resistant tag around both circuit conductors at each accessible location. Provide one-piece tags with two $\frac{3}{16}$" straps, large enough to indicate circuit number, letter, or other identification as shown in the plans. Print circuit identification on the tag with a permanent marker.

6. Use listed compression connectors, mechanical lugs, terminal blocks, or split bolt connectors for splicing as specified in DMS-11040. Use hot melt adhesive tape to fill the gap and seal the ends of heat shrink tubing. Provide UL listed gel-filled insulating splice covers. Splicing materials, insulating materials, breakaway disconnects, splice covers, and fuse holders are subsidiary to various bid items.

B. CONSTRUCTION METHODS

1. Use only a flat, high tensile strength polyester fiber pull tape for pulling conductors through the conduit system.

2. Leave 2 ft. to 3 ft. of length for each conductor up to the splice in ground boxes. Leave 3 ft. to 4 ft. of length for each conductor in ground boxes when pulled through with no splice. Leave 1 ft. to 1.5 ft. of length for each conductor at enclosures and pole bases. Leave 1.5 ft. to 3 ft. of length as required by electric utility for conductors exiting weatherheads.

3. Make splices only in junction boxes, ground boxes, pole bases, or electrical enclosures and use only listed compression connectors, mechanical lugs, terminal blocks, or split bolt connectors. Insulate splices with heavy wall heat shrink tubing or gel-filled insulating splice covers to provide a watertight splice. Overlap conductor insulation with heat shrink tubing a minimum of 2 in. past both sides of the splice. Where heat shrink tubing may not shrink sufficiently to provide a watertight seal around the individual conductors, prior to heating the tubing, increase the diameter of the conductor insulation using hot melt adhesive tape to provide a watertight seal between each conductor and the heat shrink tubing. Ensure the tape extends past the heat shrink tubing. Use hot melt adhesive tape to fill the gap and seal the ends of heat shrink tubing. Heat shrink tubing that appears to have been burned or overheated is considered defective and must be replaced.

4. Size and install gel-filled insulating splice covers according to manufacturer's specifications when used in place of heat shrink tubing.

5. Wire nuts with factory applied waterproof sealant may be used for 8 AWG or smaller conductors in above ground junction boxes, but not in pole bases or ground boxes. Install wire nuts in an upright position to prevent the accumulation of water.

6. Support conductors in illumination poles with a J-hook at the top of the pole.

7. When terminating conductors, remove the insulation and jacketing material without nicking the individual strands of the conductor. Conductors with nicked individual conductor strands or removed strands will be considered damaged.

8. Replace conductors and cables that are damaged or that fail an insulation resistance test at no additional cost to the Department.

9. Do not repair damaged conductors with duct tape, electrical tape, or wire nuts. Use only approved splicing methods.

B. CONSTRUCTION METHODS (CONTINUED)

10. Do not terminate more than one conductor under a single lug unless it is rated for multiple conductors. Do not exceed the lug's listing for maximum number and size of conductors allowed.

11. Follow manufacturer's instructions when terminating conductors to breakaway connectors. Properly torque threaded connections. Proper terminations are critical to the safe operation of breakaway devices. Trim waterproofing boots on breakaway connectors to fit snugly around the conductor to ensure a waterproof connection. Only one conductor may enter a single opening in a boot. Provide waterproof boots with the correct number of openings. Leave unused openings factory sealed. Use prequalified breakaway connectors as shown on the MPL.

12. Provide and install a separate stranded equipment grounding conductor (EGC) in all conduits that contain circuit wiring of 50 volts or more. Unless shown elsewhere, size the EGC to be the same size as the largest current carrying conductor in the conduit. Bond all EGCs together at every accessible location. For ITS installations, bond and ground metal ground box covers and other metal equipment as shown on ITS standards.

C. TEMPORARY WIRING

1. Install temporary conductors and electrical equipment in accordance with the NEC article "Temporary Installations" and Department standard sheets.

2. Provide a ground fault circuit interrupter (GFCI) for powering portable electrical equipment, power tools, ice machines, ice storage bins and refrigerators located outdoors at grade. GFCI may be any one of the following: molded cord and plug set, receptacle, or circuit breaker type.

3. Use listed wire nuts with factory applied sealant for temporary wiring where approved.

4. Enclose conductor splices within a listed enclosure or ground box, or ensure the splices are more than 10 ft. above grade vertically and more than 5 ft. horizontally from any metal structure. When installing temporary conductors in areas subject to vehicle traffic or mobile construction equipment, ensure the vertical clearance to ground is at least 18 ft. when measured at the lowest point. Ground messenger wires that support power conductors in conformance with the NEC.

5. Protect and when necessary repair any existing electrical conduits uncovered during the construction process in a timely manner and in conformance with the NEC.

GROUND RODS & GROUNDING ELECTRODES

A. MATERIAL INFORMATION

1. Provide and install a grounding electrode at electrical services. Provide ground rods according to DMS-11040 and the plans. Larger diameter or longer length rods may be called for in some locations. Concrete encased grounding electrodes may be called for in some locations including electrical services — see plan sheets.

B. CONSTRUCTION METHODS

1. Furnish and install ground rods in soil, concrete, or both, as called for in the plans. For ground rods installed in concrete, ensure the connection of the conductor to the ground rod is readily accessible for inspection or repairs. For ground rods installed in soil, ensure that the upper end is between 2 to 4 in. below finished grade.

2. Do not place ground rods in the same drilled hole as a timber or concrete pole.

3. Install ground rods so the imprinted part number is at the upper end of the rod.

4. Remove all non-conductive material such as concrete splatter from the rod at the clamp location.

5. Route all conductors as short and straight as possible for connection to lightning protection ground rods. When a bend is required, ensure a minimum radius bend of 4 in.

6. Unless otherwise called for in the plans, protect grounding electrode conductors with non-metallic conduit. When protecting grounding electrode conductors with metal conduit, provide and install a grounding bushing and properly sized bonding jumper on each end of the metal conduit.

7. Written authorization is required before installing a ground rod in a horizontal trench for rocky soil or a solid rock bottom.

COMPRESSION SPLICE
OPTION 1

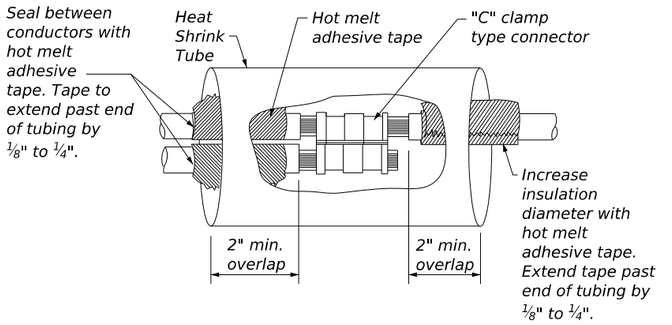

SPLIT BOLT SPLICE
OPTION 2

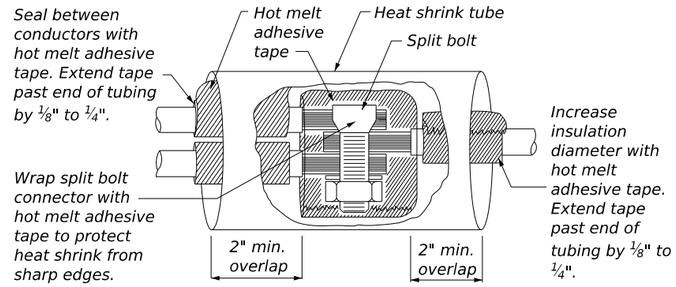

GEL-FILLED INSULATED SPLICE
OPTION 3

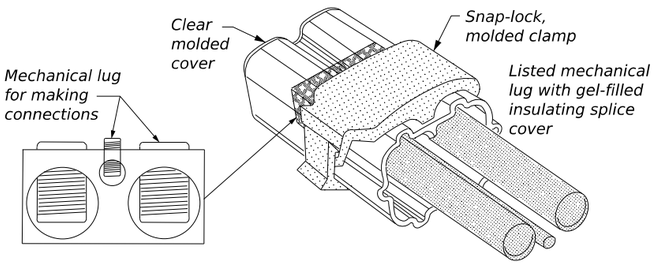

Texas Department of Transportation

Traffic Safety Division Standard

ELECTRICAL DETAILS CONDUCTORS

ED(3)-25

FILE: ed3-25.dgn	DN: TxDOT	CK: TxDOT	DW: TxDOT	CK: TxDOT
©TxDOT April 2025	CONT	SECT	JOB	HIGHWAY
REVISIONS	0337	01	053	SH 29
1-92 12-00 10-14 10-93 3-03 4-25 4-98 5-03	DIST	COUNTY		SHEET NO.
	AUS	WILLIAMSON		218

71C

DISCLAIMER:
The use of this standard is governed by the "Texas Engineering Practice Act". No warranty of any kind is made by TxDOT for any purpose whatsoever. TxDOT assumes no responsibility for the conversion of this standard to other formats or for incorrect results or damages resulting from its use.

DATE:12/18/2025 2:45:51 PM
FILE: pw://kh-pw.bentley.com:kh-pw-01/Documents/01 Active Projects/TX-GEO-0337-01-053 - ED(4)-25 - Ground Box Standard/ed4-25.dgn

APRON FOR GROUND BOX

PLAN VIEW

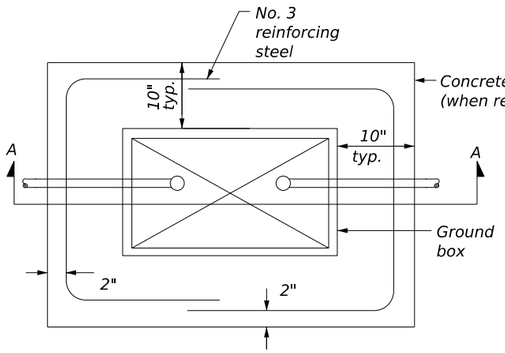

SECTION A - A

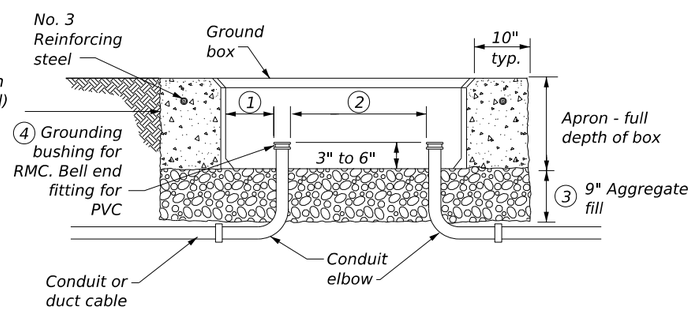

SECTION A - A NOTES:

1. *Uniformly space ends of conduits within the ground box. Position ends of conduits so that ground box walls do not interfere with the installation of grounding bushings or bell end fittings.*
2. *Maintain sufficient space between conduits to allow for proper installation of bushing.*
3. *Place aggregate under the box, not in the box. Aggregate should not encroach on the interior volume of the box.*
4. *Install a grounding bushing on the upper end of all RMC terminating in a ground box. Ground RMC elbows when any part of the elbow is less than 18 in. below the bottom of the ground box. Install a PVC bushing or bell end fitting on the upper end of all PVC conduits terminating in a ground box.*

GROUND BOXES	
TYPE	OUTSIDE DIMENSIONS (Width x Length X Depth)
A	12" X 23" X 11"
B	12" X 23" X 22"
C	16" X 29" X 11"
D	16" X 29" X 22"
E	12" X 23" X 17"

GROUND BOX COVERS								
TYPE	DIMENSIONS							
	H	I	J	K	L	M	N	P
A, B & E	23 ¼"	23"	13 ¾"	13 ½"	9 ⅞"	5 ⅛"	1 ⅜"	2"
C & D	30 ½"	30 ¼"	17 ½"	17 ¼"	13 ¼"	6 ¾"	1 ⅜"	2"

NOTES:

A. MATERIALS

1. *Provide polymer concrete ground boxes measuring 16 in. x 30 in. x 24 in. (W x L x D) or smaller in accordance with Departmental Material Specification DMS-11070, "Ground Boxes" and Item 624, "Ground Boxes."*
2. *Provide Type A, B, C, D, and E ground boxes as shown in the plans and as listed on the Material Producers List (MPL) on the Department web site under "Roadway Illumination and Electrical Supplies," Item 624.*
3. *Ensure ground box cover is correctly labeled in accordance with DMS-11070.*
4. *Provide larger ground boxes in accordance with Item 624 and as shown in the plans.*

B. CONSTRUCTION METHODS

1. *Before setting ground box and after placing and capping conduits, lay an aggregate bed a minimum of 9 in. deep that extends 10 in. beyond the sides of the ground box. Provide coarse aggregate sized 3/4 in. to 2 in., with no more than 20% material passing through a no. 8 sieve, and as defined by the current ASTM C33/33M standard. Clean aggregate and dirt from conduits according to Item 618.*
2. *Cast ground box aprons in place. Reinforcing steel may be field bent. Ensure the depth of concrete for the apron extends from finished grade to the top of the aggregate bed under the box. Ground box aprons, including concrete and reinforcing steel, are subsidiary to ground boxes when called for by descriptive code.*
3. *Keep bolt holes in the box clear of dirt. Bolt covers down when not working in ground boxes.*
4. *Install all conduits and elbows in a professional and skillful manner. Uniformly space conduits so grounding bushings and bell end fittings can easily be installed.*
5. *Temporarily seal all conduits in the ground box until conductors are installed.*
6. *Permanently seal conduits immediately after the completion of conductor installation. Permanently seal the ends of all conduits with duct seal, expandable foam, or other method as approved. Do not use duct tape as a permanent conduit seal. Do not use silicone caulk as a sealant.*
7. *Bond all equipment grounding conductors in a ground box together with listed connectors.*
8. *When a Type B or D ground box is stacked to meet volume requirements, an appropriately sized hole may be cut for conduit entry in the side wall at least 18 in. below grade.*
9. *If an existing ground box in the contract has a metal cover, bond the cover to the equipment grounding conductor with a 3 ft. long stranded bonding jumper that is the same size as the grounding conductor. The bonding jumper is subsidiary to various bid items. Verify existing ground boxes with metal covers are shown on the plans, with notes fully describing the work required.*
10. *If other ground boxes with metal covers are within the project limits but are not part of the contract, the Engineer may direct the Contractor to bond the metal covers, identifying the specific boxes in writing. This work will be paid for separately.*
11. *Bond metal ground box covers to the grounding conductor with a tank ground type lug.*

GROUND BOX COVER

PLAN VIEW

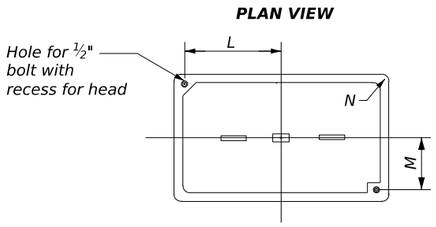

END

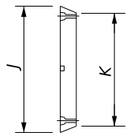

SIDE

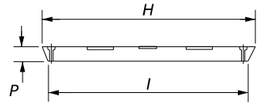

Texas Department of Transportation

Traffic Safety Division Standard

ELECTRICAL DETAILS GROUND BOXES

ED(4)-25

FILE: ed4-25.dgn	DN: TxDOT	CK: TxDOT	DW: TxDOT	CK: TxDOT
©TxDOT April 2025	CONT	SECT	JOB	HIGHWAY
REVISIONS	0337	01	053	SH 29
1-92 3-03 4-25 4-98 5-03 12-00 10-14	DIST	COUNTY		SHEET NO.
	AUS	WILLIAMSON		219

71D

DISCLAIMER:
The use of this standard is governed by the "Texas Engineering Practice Act". No warranty of any kind is made by TxDOT for any purpose whatsoever. TxDOT assumes no responsibility for the conversion of this standard to other formats or for incorrect results or damages resulting from its use.

DATE: 12/18/2025 2:46:10 PM
FILE: pw://kh-pw.bentley.com:kh-pw-01/Documents/01 Active Projects/TX-GEO-000135 standards group/Working/ed5-25.dgn

ELECTRICAL SERVICES NOTES

1. Provide electrical services in accordance with Electrical Details standard sheets, Departmental Material Specification (DMS)-11080, "Electrical Services" and Item 628, "Electrical Services." Provide electrical service types A, C, and D, as listed on the Material Producers List (MPL) on the Department web site under "Roadway Illumination and Electrical Supplies," Item 628. Provide other service types as detailed on the plans.

2. Coordinate with the Engineer and the utility provider for metering and compliance with utility requirements. Primary line extensions, connection charges, meter charges, and other charges by the utility company to provide power to the location are paid for in accordance with Item 628. Get approval for the costs associated with these charges prior to engaging the utility company to do the work. Consult with the utility provider to determine costs and requirements, and coordinate the work as approved.

3. Provide a Master Lock, Model No. 2, M1, or 6121, keyed to code 2195. Master Lock 2195 keys and locks become property of the Department. Unless otherwise approved, do not energize electrical service equipment until locks are installed.

4. Enclosures with external disconnects that de-energize all equipment inside the enclosure do not need a dead front trim. Protect incoming line terminations from incidental contact as required by the NEC.

5. When galvanized is specified for nuts, screws, bolts or miscellaneous hardware, stainless steel may be used.

6. Provide wiring and electrical components rated for 75°C. Provide red, black, and white colored XHHW service entrance conductors of minimum size 6 American Wire Gauge (AWG). Identify conductors per ED(3). Ensure each service entrance conductor exits through a separately bushed non-metallic opening in the weatherhead. The lengths of the conductors outside the weatherhead are to be 1.5 ft. to 3 ft. as required by electric utility.

7. Provide rigid metal conduit (RMC) for all conduits on service, except for the ½ in. PVC conduit containing the electrical service grounding electrode conductor. Size the service entrance conduit as shown in the plans. Ensure conduit for branch circuit entry to enclosure is the same size as shown on the layout sheets for branch circuit conduit. Extend all rigid metal conduits a minimum of 6 in. underground and then couple to the type and schedule of the conduit shown on the plans. Install a grounding bushing on the RMC where it terminates in the service enclosure.

8. Use of liquidtight flexible metal conduit (LFMC) is allowed between the meter and service enclosure when they are mounted 90 to 180 degrees from each other. Size this LFMC the same size as the service entrance conduit. LFMC must not exceed 3 ft. in length. Strap LFMC within 1 ft. of each end. Terminate each end of the LFMC with a grounding bushing or fitting. The LFMC must contain a grounded (neutral) conductor. Ensure bends in LFMC do not exceed 180 degrees. A pull test is required on all installed conductors, with at least 6 in. of free conductor movement demonstrated to the satisfaction of the Engineer.

9. Ensure all mounting hardware and installation details of services conform to utility company specifications.

10. Provide the following documents in the electrical service document pocket: schematic drawing unique to the service from the UL 508 shop; plan sheet showing Electrical Service Data Chart for the service; plan sheets for the circuits powered by the service; and red lined plan sheets if installation differs from the original design. Reduce larger sheets to 8 ½ in. x 11 in. and laminate all documents.

11. When providing an "Off The Shelf" Type D or Type T service, provide laminated plan sheets detailing equipment and branch circuits supplied by that service. Reduce 11 in. x 17 in. plan sheets to 8 ½ in. x 11 in. before laminating. When the enclosure has no door pocket, deliver these drawings to the Engineer before completion of the work.

12. Do not install conduit in the back wall of a service enclosure where it would penetrate the equipment mounting panel inside the enclosure. Provide grounding bushings on all metal conduits, and terminate bonding jumpers to grounding bus. Grounding bushings are not required when the end of the metal conduit is fitted with a watertight conduit hub or meter hub.

MAIN DISCONNECT & BRANCH CIRCUIT BREAKERS

1. Field drill flange-mounted remote operator handle, if needed, to ensure handle is lockable in both the "On" and "Off" positions.

2. When the utility company provides a transformer larger than 50 KVA, verify that the available fault current is less than the circuit breaker's ampere interrupting capacity (AIC) rating and provide documentation from the electric utility provider to the Engineer.

PHOTOELECTRIC CONTROL

1. Provide photocell as listed on the MPL. Move, adjust, or shield the photocell from stray or ambient night time light to ensure proper operation. Mount photocell facing north when practical. Mount top of pole photocells as shown on Top Mounted Photocell Detail.

ELECTRICAL SERVICE DATA (EXAMPLE) ∗

ELEC. SERVICE ID	PLAN SHEET NUMBER	ELECTRICAL SERVICE DESCRIPTION	SERVICE CONDUIT SIZE ∗∗	SERVICE CONDUCTORS NO./SIZE	SAFETY SWITCH AMPS	MAIN CKT. BKR. POLE/AMPS	LIGHTING CONTACTOR AMPS	PANELBOARD/ LOADCENTER AMP RATING	BRANCH CIRCUIT ID	BRANCH CKT. BKR. POLE/AMPS	BRANCH CIRCUIT AMPS	KVA LOAD
SB 183	289	ELC SRV TY A 240/480 100(SS)AL(E)SF(U)	2"	3/#2	100	2P/100	2P/100	N/A	Lighting NB	2P/40	26	28.1
									Lighting SB	2P/40	25	
									Underpass	1P/20	15	
NB Access	30	ELC SRV TY D 120/240 060(NS)SS(E)TS(O)	1 ¼"	3/#6	N/A	2P/60	2P/30	100	Sig. Controller	1P/30	23	5.3
									Luminaires	2P/20	9	
									CCTV	1P/20	3	
2nd & Main	58	ELC SRV TY T 120/240 000(NS)GS(N)SP(O)	1 ¼"	3/#6	N/A	N/A	N/A	70	Flashing Beacon 1	1P/20	4	1.0
									Flashing Beacon 2	1P/20	4	

∗ Example only, not for construction. All new electrical services must have electrical service data chart specific to that service as shown in the plans.

∗∗ Verify service conduit size with utility. Size may change due to utility meter requirements. Ensure conduit size meets the National Electrical Code.

ELECTRICAL SERVICE BID ITEM DESCRIPTIONS

ELEC SERV TY X XXX/XXX XXX(XX)XX(X)XX(X)

SCHEMATIC TYPE

SERVICE VOLTAGE

DISCONNECT AMP RATING
NOTE: 000 indicates main lug only, typically Type T

SAFETY SWITCH
(SS) = Safety Switch Ahead of Meter - Check with Utility
(NS) = No Safety Switch Ahead of Meter - Check with Utility

ENCLOSURE TYPE
GS = Galvanized steel ("off the shelf")
SS = Stainless steel (Custom Enclosure) - See MPL
AL = Aluminum (Custom Enclosure) - See MPL

PHOTOCELL MOUNTING LOCATION
(E) = Inside Service/Enclosure Mounted
(T) = Top of pole
(L) = Luminaire mounted
(N) = None - No Photocell or Lighting Contactor Required

SERVICE SUPPORT TYPE
GC = Granite concrete
OC = Other concrete
TP = Timber pole
SP = Steel pole
SF = Steel frame
OT = Pole by others or paid for separately
EX = Existing pole
TS = Service on traffic signal pole
PS = Pedestal Service

SERIVCE FEED
O = Overhead Service Feed from Utility
U = Underground Service Feed from Utility

TOP MOUNTED PHOTOCELL

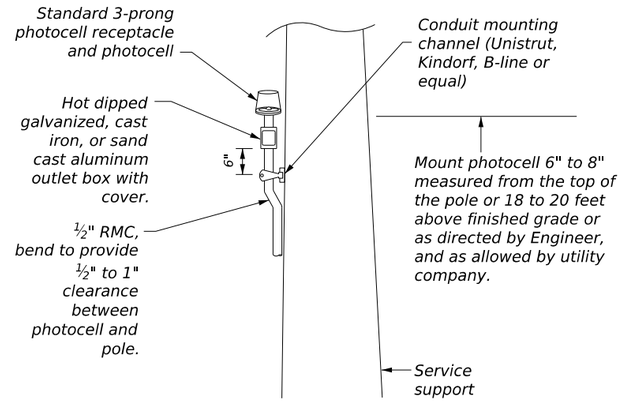

Install conduit strap maximum 3 ft. from box. Spacing between straps supporting conduit is 5 ft. maximum.

Texas Department of Transportation

Traffic Safety Division Standard

ELECTRICAL DETAILS SERVICE NOTES & DATA

ED(5)-25

FILE: ed5-25.dgn	DN: TxDOT	CK: TxDOT	DW: TxDOT	CK: TxDOT
©TxDOT April 2025	CONT	SECT	JOB	HIGHWAY
REVISIONS	0337	01	053	SH 29
4-98 10-14 12-00 4-25 3-03	DIST	COUNTY		SHEET NO.
	AUS	WILLIAMSON		220

71E

DISCLAIMER:
The use of this standard is governed by the "Texas Engineering Practice Act". No warranty of any kind is made by TxDOT for any purpose whatsoever. TxDOT assumes no responsibility for the conversion of this standard to other formats or for incorrect results or damages resulting from its use.

DATE: 12/18/2025 2:46:37 PM
FILE: pw://kh-pw.bentley.com:kh-pw-01/Documents/01 Active Projects/TX-GEO-003126/Standards/ED(6)-25.dgn

TYPE A
THREE WIRE

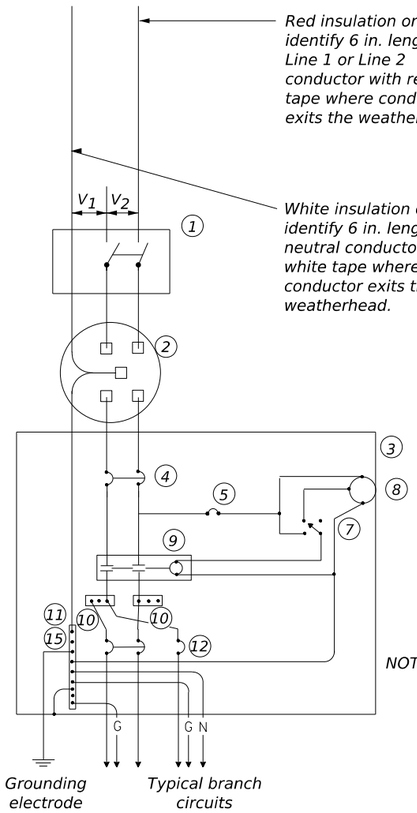

TYPE C
THREE WIRE

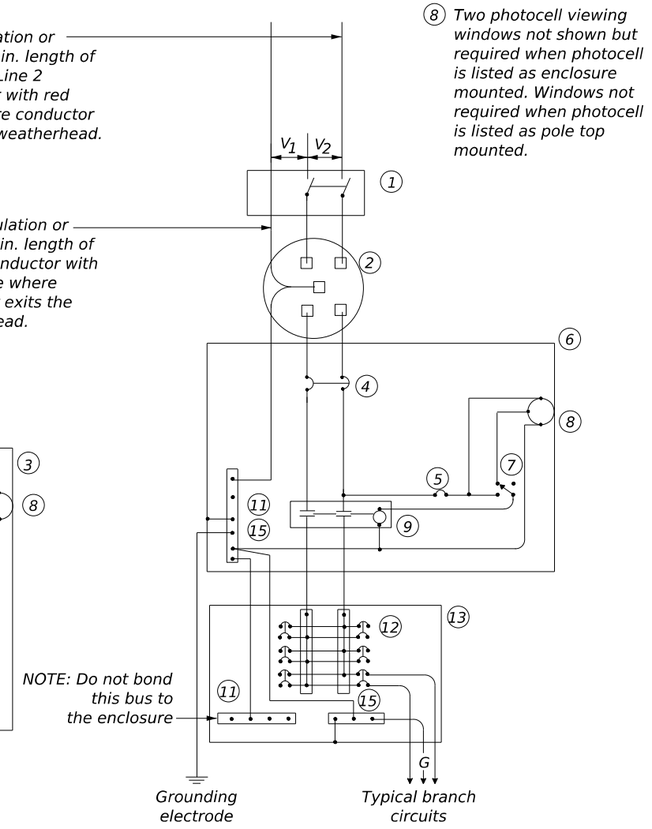

TYPE D - CUSTOM
120/240 VOLTS - THREE WIRE

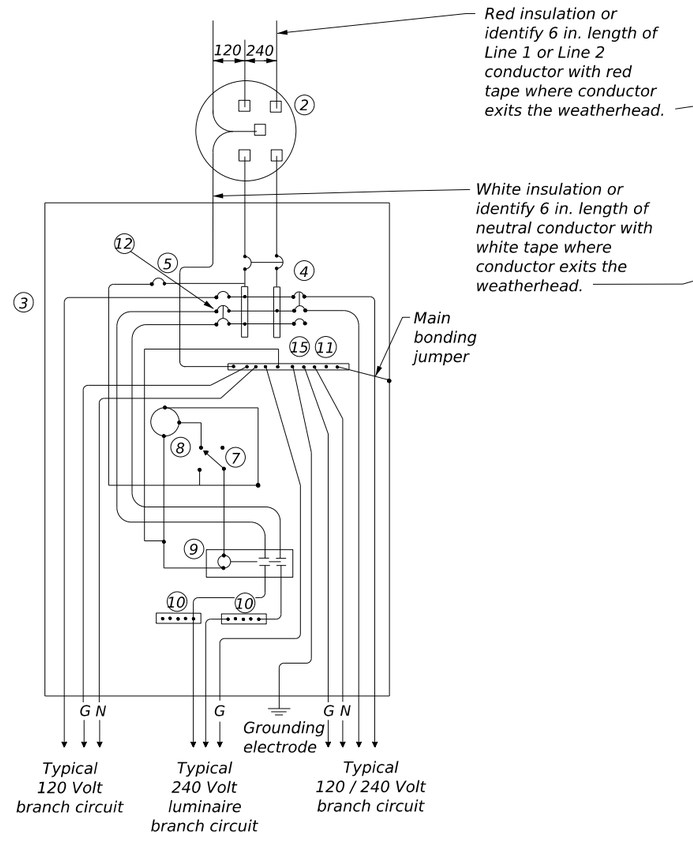

TYPE T
120/240 VOLTS - THREE WIRE

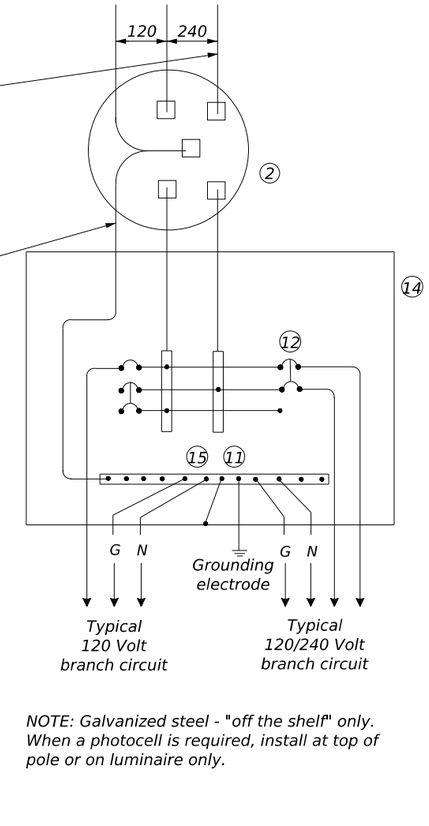

NOTE: Galvanized steel - "off the shelf" only. When a photocell is required, install at top of pole or on luminaire only.

WIRING LEGEND	
———	Power Wiring
———	Control Wiring
—N—	Neutral Conductor
—G—	Equipment grounding conductor (always required)

SCHEMATIC NOTES:

1. Safety Switch (when required)
2. Meter (when required - verify with electric utility provider)
3. Service Assembly Enclosure
4. Main Disconnect Breaker (See Electrical Service Data)
5. Circuit Breaker, 15 Amp (Control Circuit)
6. Auxiliary Enclosure
7. Control Station ("H-O-A" Switch)
8. Photo Electric Control (enclosure-mounted shown)
9. Lighting Contactor
10. Power Distribution Terminal Blocks
11. Neutral Bus
12. Branch Circuit Breaker (See Electrical Service Data)
13. Separate Circuit Breaker Panelboard
14. Load Center
15. Ground Bus

Texas Department of Transportation

Traffic Safety Division Standard

ELECTRICAL DETAILS SERVICE SCHEMATICS AND NOTES

ED(6)-25

FILE: ed6-25.dgn	DN: TxDOT	CK: TxDOT	DW: TxDOT	CK: TxDOT
©TxDOT April 2025	CONT	SECT	JOB	HIGHWAY
REVISIONS	0337	01	053	SH 29
4-98 10-14 12-00 4-25 3-03	DIST	COUNTY		SHEET NO.
	AUS	WILLIAMSON		221

71F

NOTES:

1. Do not pass luminaire conductors through the signal controller cabinet.
2. Include an equipment grounding conductor in all conduits throughout the electrical system. Bond all exposed metal parts to the grounding conductor.
3. Provide roadway luminaires, when required, in accordance with Item 610, "Roadway Illumination Assemblies," except for performance testing of luminaires. Test installed roadway luminaires for proper operation as a part of the associated traffic signal system test.
4. Ground internally lighted street name (ILSN) signs to the pole with a 12 AWG green XHHW conductor.
5. Bond anchor bolts to rebar cage in two locations using #3 bars or 6 AWG stranded copper conductors. Use listed mechanical connectors rated for embedment in concrete. See TXDOT standard TS-FD for further details.
6. Drill and tap signal poles for ½ in. x 13 UNC tank ground fitting. Provide and install tank ground fitting 4 in. to 6 in. directly below electrical service enclosure. Provide properly sized hole through the bottom of the enclosure for the service grounding electrode conductor. Connect the electrical service grounding electrode conductor to the tank ground fitting. Ensure electrical service grounding electrode conductor is as short and straight as possible from the enclosure to the tank ground fitting. See Inset A detail for further information. Size service entrance conduit and branch circuit conduit as shown in the plans.
7. Mount electrical service enclosure and meter to signal pole with stainless steel bands. Ensure bands are at least ¾ in. wide. Secure enclosures to bands using two-bolt brackets. Install brackets near top and bottom of each enclosure. Install properly sized stainless steel washers on each bolt in the enclosure. Band or drill and tap properly sized stand-off straps to signal pole for attaching conduit.
8. Lock all enclosures and bolt down all ground box covers before applying power to the signal installation.
9. Terminate conduits entering the top of enclosures with a watertight conduit hub or meter hub. Install a grounding bushing on all metal conduits not connected to conduit-sealing hub or threaded boss. Bond the grounding bushing to the ground bus with a bonding jumper. Seal all conduits entering enclosures with duct seal or expanding foam. Do not use silicone to seal conduit ends.

SIGNAL POLE WITH SERVICE

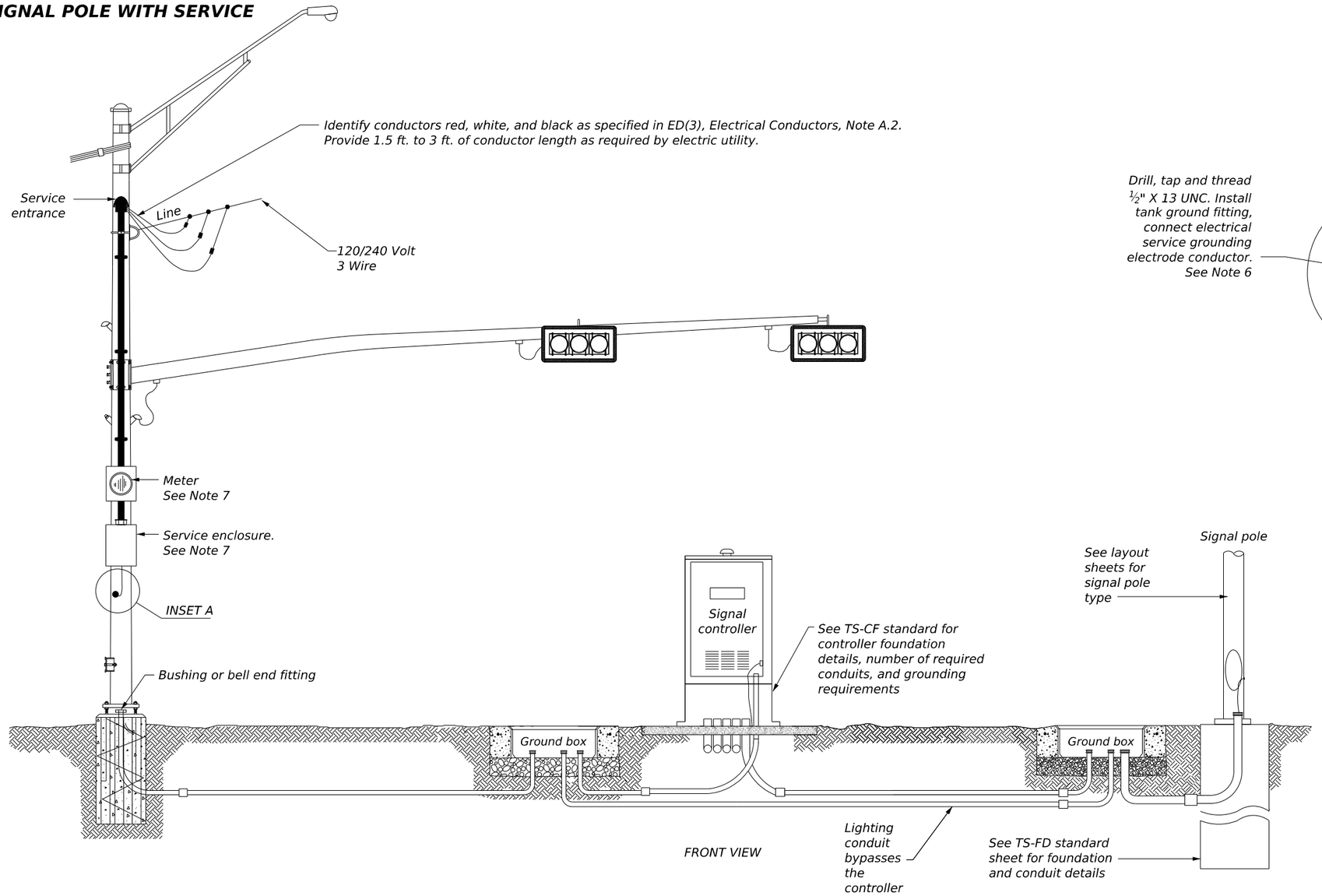

INSET A

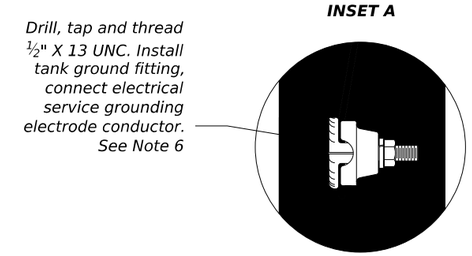

Texas Department of Transportation

Traffic Safety Division Standard

ELECTRICAL DETAILS TYPICAL TRAFFIC SIGNAL SYSTEM DETAILS

ED(8)-25

FILE: ed8-25.dgn	DN: TxDOT	CK: TxDOT	DW: TxDOT	CK: TxDOT
©TxDOT April 2025	CONT	SECT	JOB	HIGHWAY
REVISIONS 1-92 3-03 4-25 4-98 5-03 12-00 10-14	0337	01	053	SH 29
	DIST	COUNTY		SHEET NO.
	AUS	WILLIAMSON		222

71H

DISCLAIMER:
The use of this standard is governed by the "Texas Engineering Practice Act". No warranty of any kind is made by TxDOT for any purpose whatsoever. TxDOT assumes no responsibility for the conversion of this standard to other formats or for incorrect results or damages resulting from its use.

DATE: 12/18/2025 2:46:57 PM
FILE: pw://kh-pw.bentley.com:kh-pw-01/Documents/01 Active Projects/TX-GEO-01/TxDOT Standard to other formats or for incorrect results or damages resulting from its use.dgn

DISCLAIMER:
The use of this standard is governed by the "Texas Engineering Practice Act". No warranty of any kind is made by TxDOT for any purpose whatsoever. TxDOT assumes no responsibility for the conversion of this standard to other formats or for incorrect results or damages resulting from its use.

DATE: 12/18/2025 2:47:25 PM
FILE: pw://kh-pw.bentley.com:kh-pw-01/Documents/01 Active Projects/TX-GEO-Standards/ed9-25.dgn

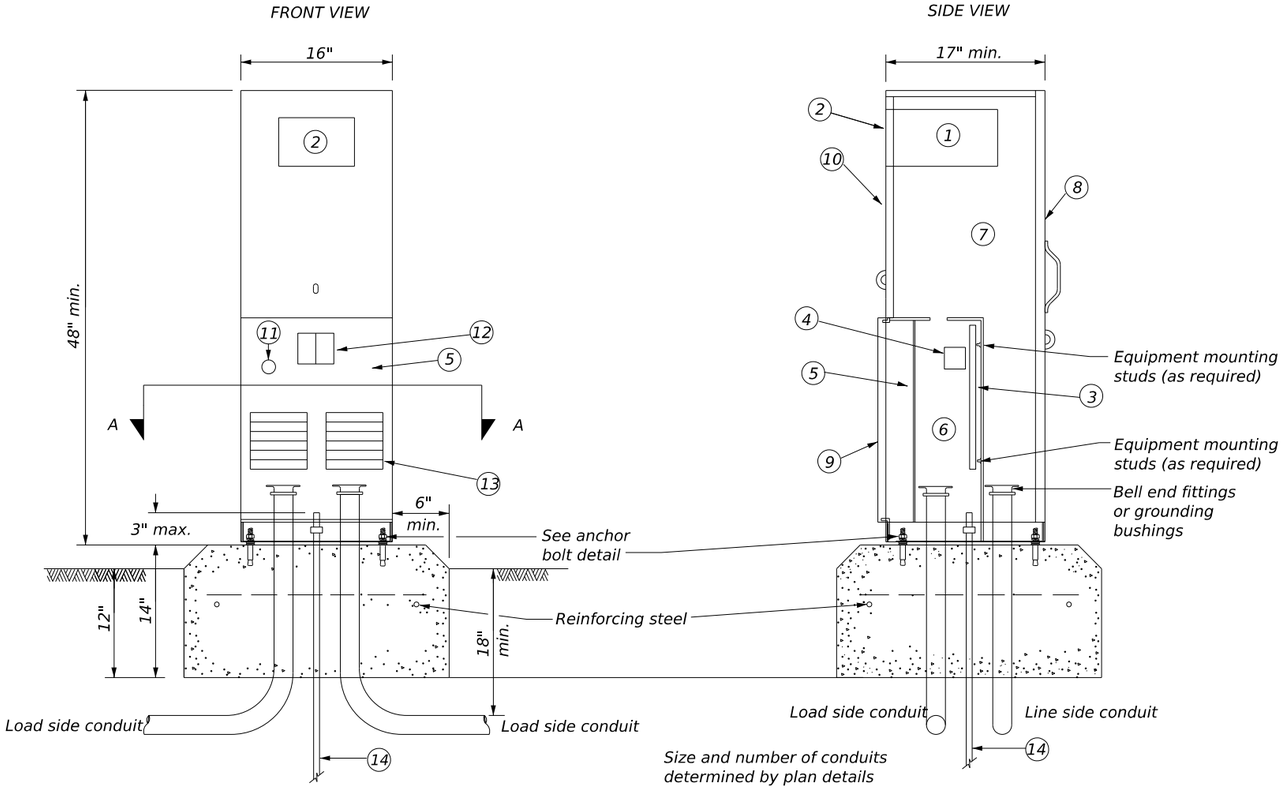

NOTE: Type D shown, Type A similar except that Type A shall have circuit breakers (CB) mounted on an equipment mounting panel. CB handles shall protrude through hinged deadfront trim.

SECTION A-A

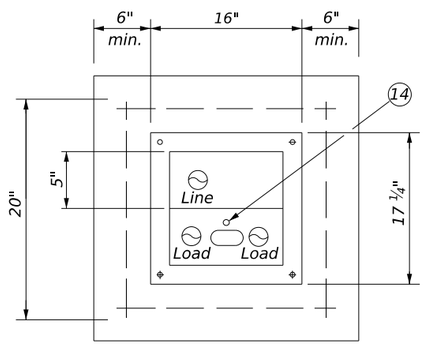

ANCHOR BOLT DETAIL

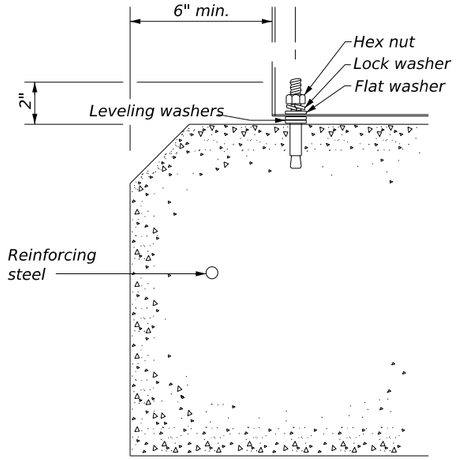

NOTES:

1. Manufacture pedestal electrical services in accordance with Departmental Material Specifications DMS-11080, "Electrical Services," DMS-11085, "Electrical Services-Pedestal (PS)" and Item 628, "Electrical Services." Provide pedestal electrical services listed on the Material Producer list (MPL) under "Roadway Illumination and Electrical Supplies," Item 628. Ensure all mounting hardware and installation details of services meet utility company specifications. Contact the local utility company for approval of pedestal details prior to installing the electrical pedestal service. Submit any changes required by the utility company prior to manufacturing the pedestal enclosure.
2. When a meter socket is required, provide a socket with a 100 amp (minimum) rating that complies with local utility requirements.
3. Provide concrete for pedestal service foundations in accordance with Item 656, "Foundations for Traffic Control Devices" except that concrete will not be paid for directly but is considered subsidiary to Item 628.
4. Provide #4 reinforcing steel for foundations in accordance with Item 440, "Reinforcement for Concrete."
5. Install ½ in. X 2 1/16 in. minimum length concrete single expansion type anchors for mounting pedestal enclosure to foundation. Match anchor location to mounting holes in each corner of enclosure. Secure each of the four corners of the pedestal enclosure to the anchors in the foundation with a ½ in. galvanized or stainless steel machine thread bolt, a properly sized locknut and a flat washer.
6. Finish top of concrete foundation in a professional and skillful manner. If leveling washers are used, ensure no more than ⅛ in. of gap exists at any corner. Do not exceed a maximum dip or rise in the foundation of ⅛ in. per foot. Ensure the top of the service enclosure is level front to back and side to side within ¼ in. Repair rocking or movement of the service enclosure at no additional cost to the Department.
7. Do not use liquidtight flexible metal conduit (LFMC) on pedestal services.
8. Ensure all elbows in the foundation are sized to meet utility provider's conduit requirements for underground conduit and feeders. PVC conduit extensions may be installed provided the ends of the rigid metal conduits are more than 2 in. below the top of the concrete foundation. Where extension conduits are metal, grounding bushings must be installed with a properly terminated bonding jumper.

DETAIL CALLOUTS:

1. Meter socket (when required)
2. Meter socket window (when required)
3. Equipment mounting panel
4. Photoelectric control window (when required)
5. Hinged deadfront trim
6. Load side conduit area
7. Line side conduit area
8. Utility access door, with handle
9. Pedestal door
10. Hinged meter access
11. Control station (H-O-A switch)
12. Main disconnect
13. Branch circuit breakers
14. Copper clad ground rod (in load side of cabinet) - 5/8" x 10'

Texas Department of Transportation | Traffic Safety Division Standard

ELECTRICAL DETAILS
PEDESTAL SERVICE TYPE PS

ED(9)-25

FILE: ed9-25.dgn	DN: TxDOT	CK: TxDOT	DW: TxDOT	CK: TxDOT
©TxDOT April 2025	CONT	SECT	JOB	HIGHWAY
REVISIONS	0337	01	053	SH 29
4-98 5-03 12-00 10-14 3-03 4-25	DIST	COUNTY		SHEET NO.
	AUS	WILLIAMSON		223

71J

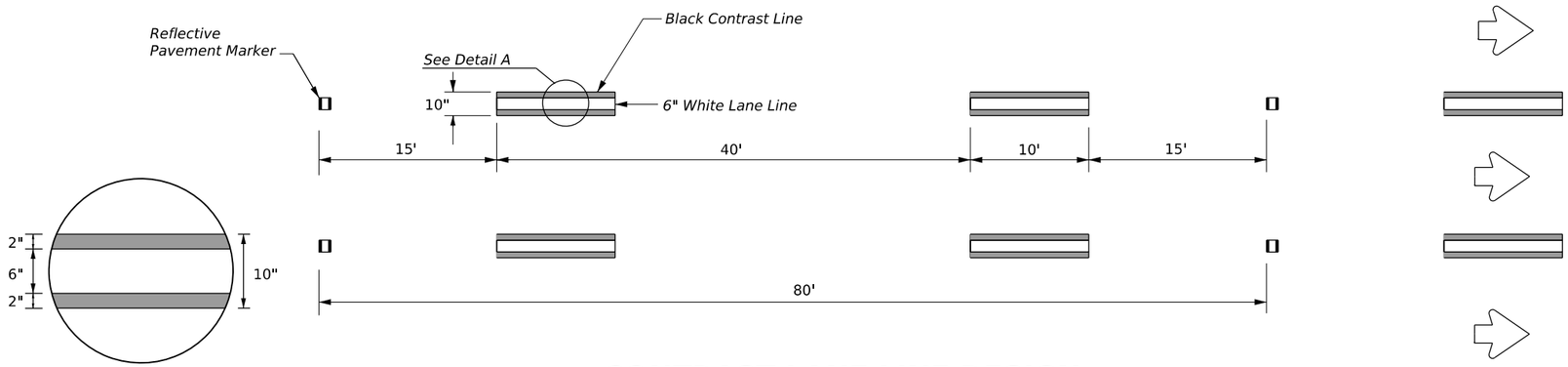

DETAIL "A"

CONTRAST LANE LINE DESIGN

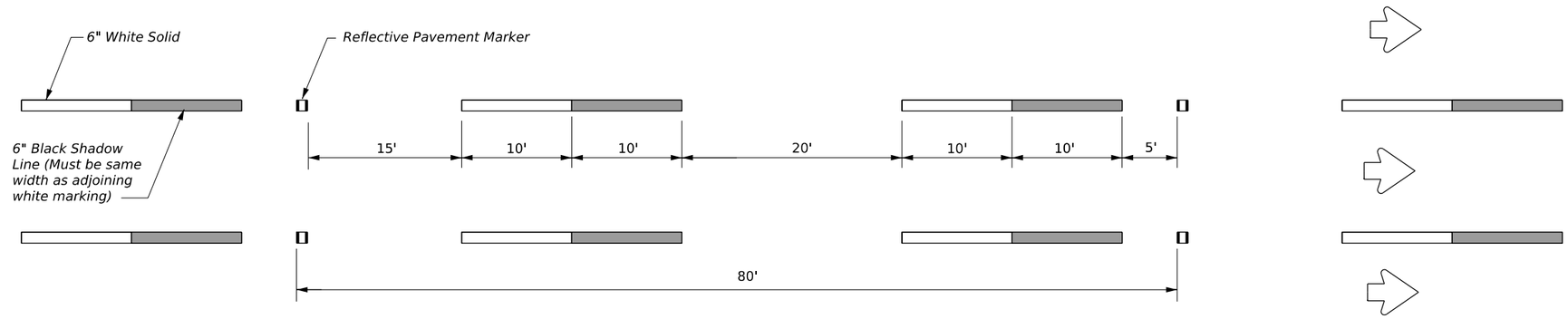

SHADOW LANE LINE DESIGN

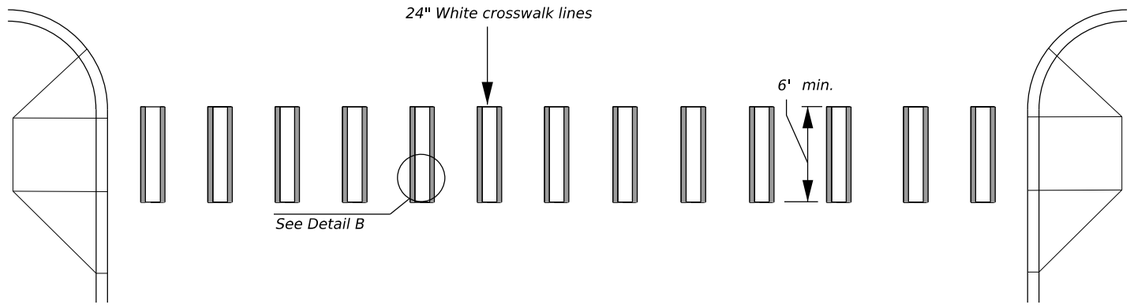

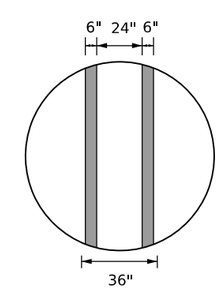

DETAIL "B"

(See PM(4) for crosswalk line placement details)

CONTRAST CROSSWALK DESIGN

GENERAL NOTES

1. Contrast and Shadow markings may only be used on concrete pavements.
2. Contrast and Shadow markings shall not be used on edge lines.
3. Contrast lane lines shall be permanent prefabricated pavement markings meeting DMS 8240.
4. Shadow lane line designs shall be a liquid markings system approved by TxDOT.
5. All raised reflective pavement markers placed in broken lines shall be placed in line with and midway between the white stripes.
6. See PM(2) for raised reflective pavement markings installation details.

MATERIAL SPECIFICATIONS	
PAVEMENT MARKERS (REFLECTORIZED)	DMS-4200
EPOXY AND ADHESIVES	DMS-6100
BITUMINOUS ADHESIVE FOR PAVEMENT MARKERS	DMS-6130
TRAFFIC PAINT	DMS-8200
HOT APPLIED THERMOPLASTIC	DMS-8220
PERMANENT PREFABRICATED PAVEMENT MARKINGS	DMS-8240

All pavement marking materials shall meet the required Departmental Material Specifications as specified by the plans.

Texas Department of Transportation

Traffic Safety Division Standard

CONTRAST AND SHADOW PAVEMENT MARKINGS

CPM(1)-23

FILE: CPM(1)-23.dgn	DN:	CK:	DW:	CK:
© TxDOT February 2023	CONT	SECT	JOB	HIGHWAY
REVISIONS	0337	01	053	SH 29
5-14 2-23	DIST		COUNTY	SHEET NO.
	AUS		WILLIAMSON	224

22N

DISCLAIMER:
The use of this standard is governed by the "Texas Engineering Practice Act". No warranty of any kind is made by TxDOT for any purpose whatsoever. TxDOT assumes no responsibility for the conversion of this standard to other formats or for incorrect results or damages resulting from its use.

DATE: 12/18/2025 2:47:44 PM
FILE: pw://kh-pw.bentley.com:kh-pw-01/Documents/01 Active Projects/TX-GEO-069284005 - SH 29 Widening/4th Declaration Set/8 Traffic/STANDARDS/CPM(1)-23.dgn

DISCLAIMER:
The use of this standard is governed by the "Texas Engineering Practice Act". No warranty of any kind is made by TxDOT for any purpose whatsoever. TxDOT assumes no responsibility for the conversion of this standard to other formats or for incorrect results or damages resulting from its use.

DATE: 12/18/2025 2:48:13 PM
FILE: pw://kh-pw.bentley.com:kh-pw-01/Documents/01 Active Projects/TX-GEO-069284/05 Design/Pmar set 7/pm1-22.dgn

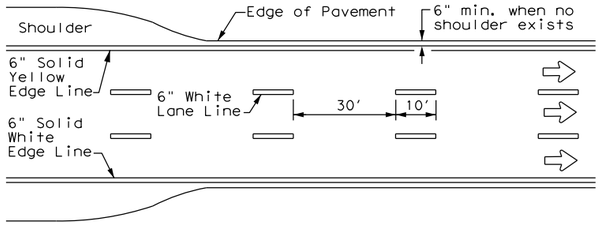

EDGE LINE AND LANE LINES
ONE-WAY ROADWAY
WITH OR WITHOUT SHOULDERS

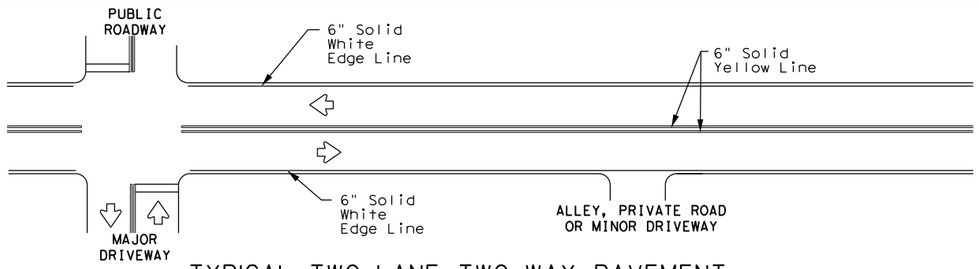

TYPICAL TWO-LANE, TWO-WAY PAVEMENT
MARKINGS THROUGH INTERSECTIONS

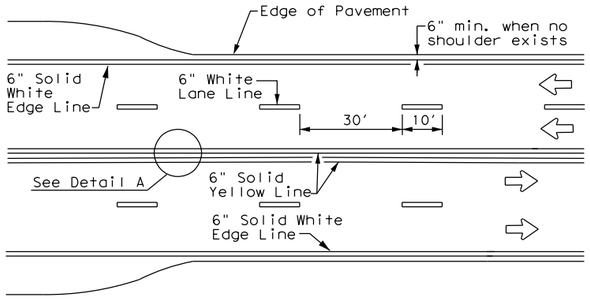

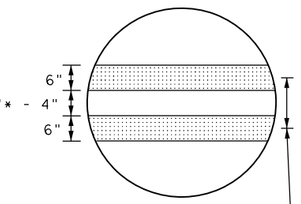

CENTERLINE AND LANE LINES
FOUR LANE TWO-WAY ROADWAY
WITH OR WITHOUT SHOULDERS

* 2" minimum for restripe projects when approved by the Engineer.

** 8" minimum for restripe projects when approved by the Engineer.

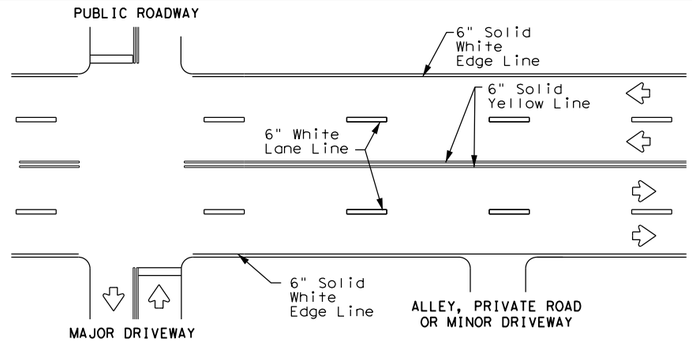

TYPICAL MULTI-LANE, TWO-WAY PAVEMENT
MARKINGS THROUGH INTERSECTIONS

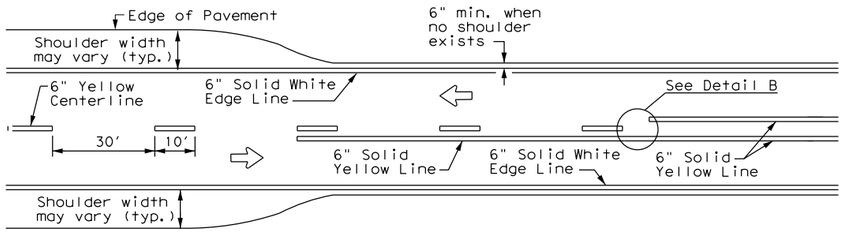

TWO LANE TWO-WAY ROADWAY
WITH OR WITHOUT SHOULDERS

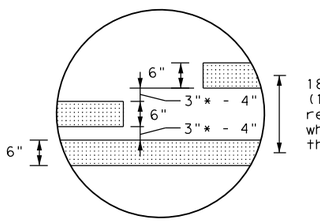

DETAIL "B"

* 2" minimum for restripe projects when approved by the Engineer.

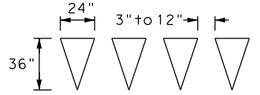

For posted speed on road being marked equal to or greater than 45 MPH.

YIELD LINES

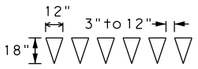

For posted speed on road being marked equal to or less than 40 MPH.

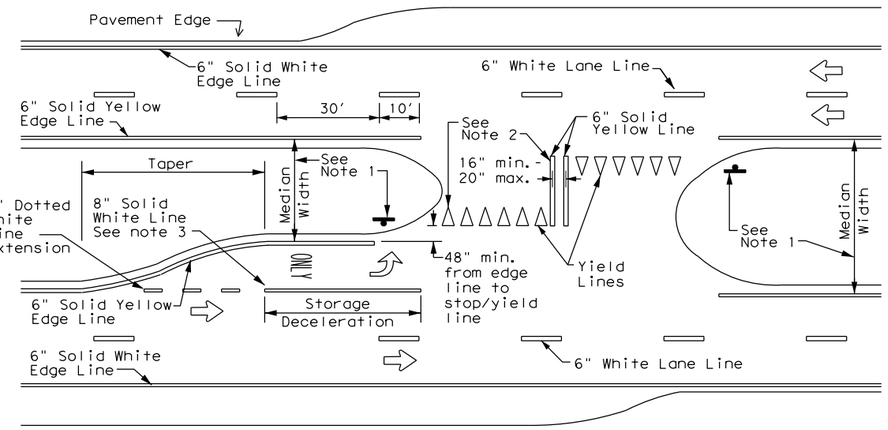

FOUR LANE DIVIDED ROADWAY CROSSOVERS

NOTES

1. Where divided highways are separated by median widths at the median opening itself of 30 feet or more, median openings shall be signed as two separate intersections.
   Each median opening has two width measurements, with one measurement for each approach. The narrow median width will be the controlling width to determine if signs are required. Yield signs are the typical intersection control. Stop signs and stop bars are optional as determined by the Engineer.
2. Install median striping (double yellow centerlines and stop lines/yield lines) when a 50' or greater median centerline can be placed. Stop lines shall only be used with stop signs. Yield lines shall only be used with yield signs.
3. Length of turn bays, including taper, deceleration, and storage lengths shall be as shown on the plans or as directed by the Engineer.

GENERAL NOTES

1. Edge line striping shall be as shown in the plans or as directed by the Engineer. The edge line should not be placed less than 6 inches from the edge of pavement. This distance may vary due to pavement raveling or other conditions. Edge lines are not required in curb and gutter sections of roadways.
2. The traveled way includes only that portion of the roadway used for vehicular travel. It does not include the parking lanes, sidewalks, berms and shoulders. The traveled ways shall be measured from the center of edge line to the center of edge line of a two lane roadway.

MATERIAL SPECIFICATIONS	
PAVEMENT MARKERS (REFLECTORIZED)	DMS-4200
EPOXY AND ADHESIVES	DMS-6100
BITUMINOUS ADHESIVE FOR PAVEMENT MARKERS	DMS-6130
TRAFFIC PAINT	DMS-8200
HOT APPLIED THERMOPLASTIC	DMS-8220
PERMANENT PREFABRICATED PAVEMENT MARKINGS	DMS-8240

All pavement marking materials shall meet the required Departmental Material Specifications as specified by the plans.

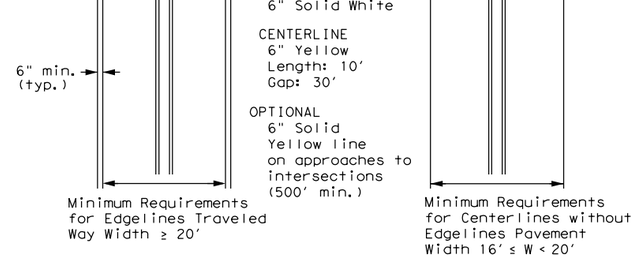

NOTE: Traveled way is exclusive of shoulder widths. Refer to General Note 2 for additional details.

GUIDE FOR PLACEMENT OF STOP LINES,
EDGE LINE & CENTERLINE
Based on Traveled Way and Pavement Widths
for Undivided Roadways

Texas Department of Transportation

Traffic Safety Division Standard

TYPICAL STANDARD PAVEMENT MARKINGS

PM(1)-22

FILE: pm1-22.dgn	DN:	CK:	DW:	CK:
© TxDOT December 2022	CONT	SECT	JOB	HIGHWAY
REVISIONS 11-78 8-00 6-20	0337	01	053	SH 29
8-95 3-03 12-22	DIST	COUNTY		SHEET NO.
5-00 2-12	AUS	WILLIAMSON		225

22A

REFLECTIVE RAISED PAVEMENT MARKERS FOR VEHICLE POSITIONING GUIDANCE

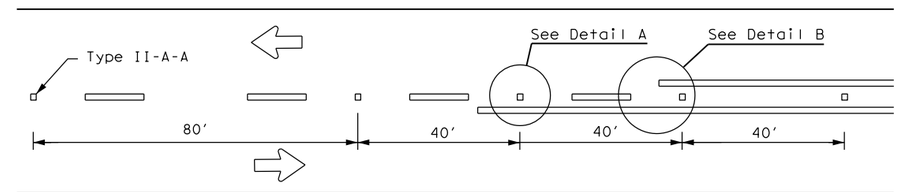

CENTERLINE FOR ALL TWO LANE TWO-WAY ROADWAYS

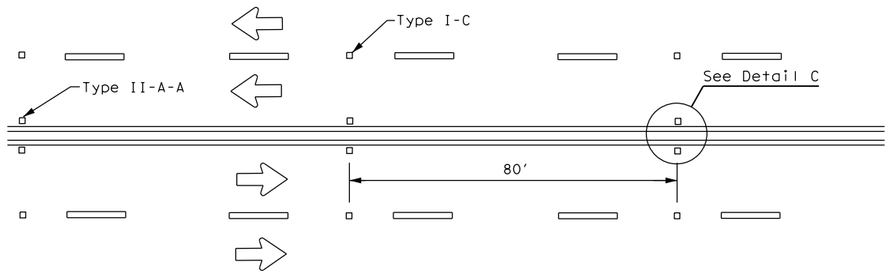

CENTERLINE & LANE LINES FOR FOUR LANE TWO-WAY ROADWAYS

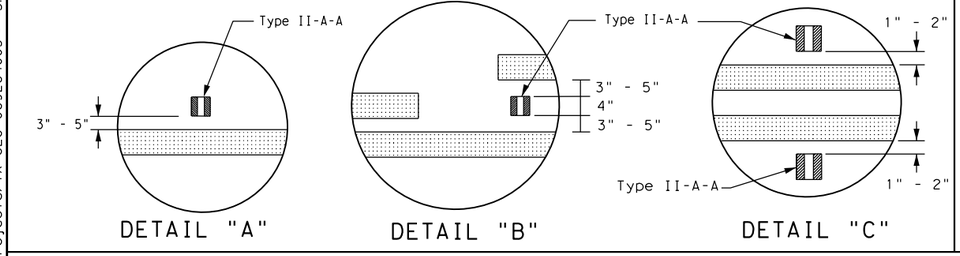

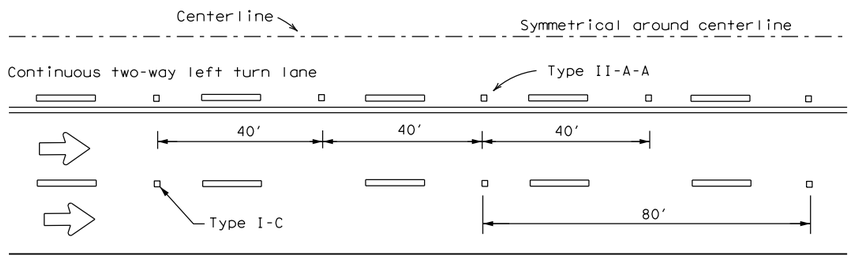

CENTERLINE AND LANE LINES FOR TWO-WAY LEFT TURN LANE

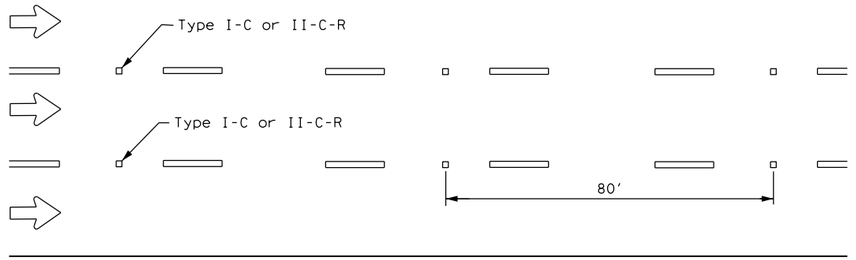

LANE LINES FOR ONE-WAY ROADWAY (NON-FREEWAY FACILITIES)

Raised pavement markers Type II-C-R shall have clear face toward normal traffic and red face toward wrong-way traffic.

See Note 3.

MATERIAL SPECIFICATIONS	
PAVEMENT MARKERS (REFLECTORIZED)	DMS-4200
EPOXY AND ADHESIVES	DMS-6100
BITUMINOUS ADHESIVE FOR PAVEMENT MARKERS	DMS-6130
TRAFFIC PAINT	DMS-8200
HOT APPLIED THERMOPLASTIC	DMS-8220
PERMANENT PREFABRICATED PAVEMENT MARKINGS	DMS-8240

All pavement marking materials shall meet the required Departmental Material Specifications as specified by the plans.

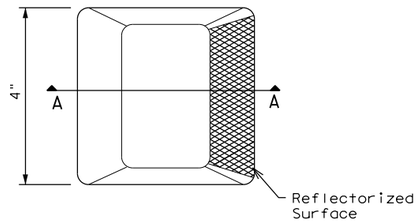

Type I (Top View)

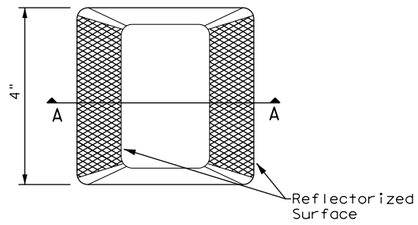

Type II (Top View)

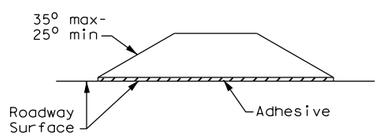

SECTION A

RAISED PAVEMENT MARKERS

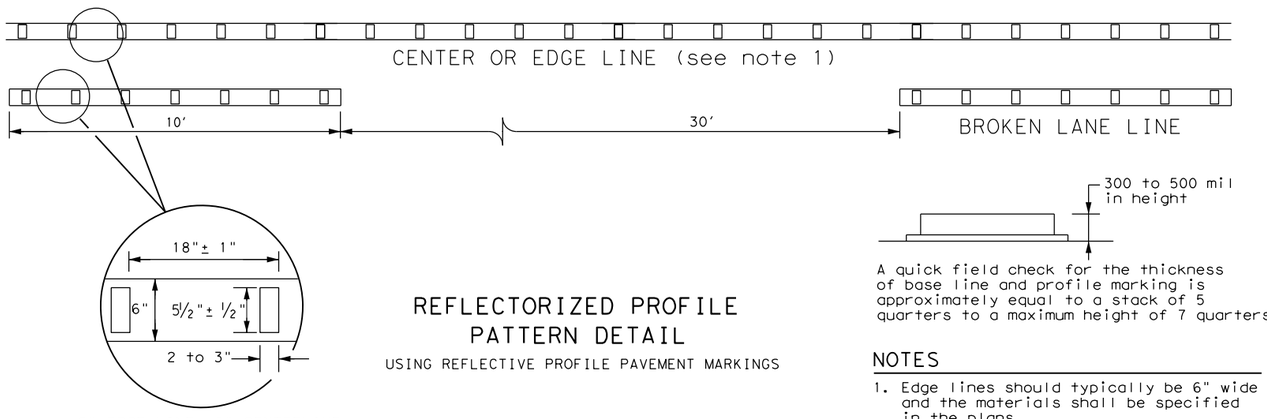

6" EDGE LINE, 6" CENTERLINE OR 6" LANE LINE

REFLECTORIZED PROFILE PATTERN DETAIL

USING REFLECTIVE PROFILE PAVEMENT MARKINGS

A quick field check for the thickness of base line and profile marking is approximately equal to a stack of 5 quarters to a maximum height of 7 quarters.

NOTES

1. Edge lines should typically be 6" wide and the materials shall be specified in the plans.
2. Profile markings shall not be placed on roadways with a posted speed limit of 45 MPH or less.

GENERAL NOTES

1. All raised pavement markers placed along broken lines shall be placed in line with and midway between the stripes.
2. On concrete pavements, the raised pavement markers should be placed to one side of the longitudinal joints.
3. Use raised pavement marker Type I-C with undivided roadways, flush medians, and two way left turn lanes. Use raised pavement marker Type II-C-R with divided highways and raised medians.

Texas Department of Transportation

Traffic Safety Division Standard

POSITION GUIDANCE USING RAISED MARKERS REFLECTORIZED PROFILE MARKINGS PM(2)-22

FILE: pm2-22.dgn	DN:	CK:	DW:	CK:
© TxDOT December 2022	CONT	SECT	JOB	HIGHWAY
REVISIONS 4-77 8-00 6-20 4-92 2-10 12-22 5-00 2-12	0337	01	053	SH 29
	DIST	COUNTY		SHEET NO.
	AUS	WILLIAMSON		226

22B

DISCLAIMER:
The use of this standard is governed by the "Texas Engineering Practice Act". No warranty of any kind is made by TxDOT for any purpose whatsoever. TxDOT assumes no responsibility for the conversion of this standard to other formats or for incorrect results or damages resulting from its use.

DATE: 12/18/2025 2:48:33 PM
FILE: pw://kh-pw.bentley.com:kh-pw-01/Documents/01 Active Projects/TX-GEO-0692/Roadway Design/Preferences/Sheets/pm2-22.dgn

DISCLAIMER:
The use of this standard is governed by the "Texas Engineering Practice Act". No warranty of any kind is made by TxDOT for any purpose whatsoever. TxDOT assumes no responsibility for the conversion of this standard to other formats or for incorrect results or damages resulting from its use.

DATE: 12/18/2025 2:48:53 PM
FILE: pw://kh-pw.bentley.com:kh-pw-01/Documents/01 Active Projects/TX-GEO-0692840/Design/Pmar set 7/Sub folder/pm3-22.dgn

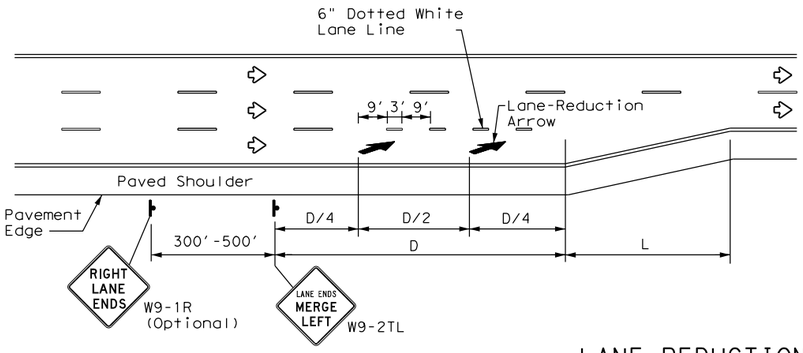

LANE REDUCTION

NOTES

1. Lane reduction pavement markings are used where the number of through lanes is reduced because of narrowing of the roadway or because of a section of on-street parking in what would otherwise be a through lane. For Texas Super 2 Passing Lanes, see TS2(PL) standard sheets.
2. On divided highways, an additional RIGHT LANE ENDS (W9-1R) sign may be installed in the median aligned with the W9-1R sign on the right side of the highway.
3. Lane reduction arrows are required for speeds of 45 mph or greater. An optional third lane reduction arrow may be added based on engineering judgement. If used, the optional third lane reduction arrow should be centered between the first and last lane reduction arrows.
4. For lane reductions on Freeways and Expressways, signing shall conform to the TxDOT Freeway Signing Handbook.

ADVANCED WARNING SIGN DISTANCE (D)		
Posted Speed	D (ft)	L (ft)
30 MPH	460	$L=\frac{WS^2}{60}$
35 MPH	565	
40 MPH	670	
45 MPH	775	L=WS
50 MPH	885	
55 MPH	990	
60 MPH	1,100	
65 MPH	1,200	
70 MPH	1,250	
75 MPH	1,350	

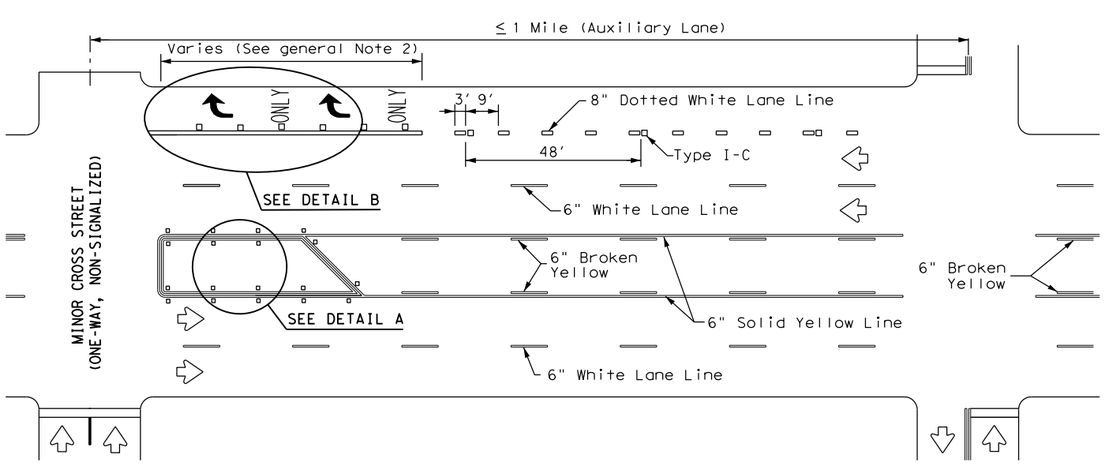

TYPICAL TWLTL AT ONE-WAY STREET AND RIGHT TURN AUXILIARY LANE

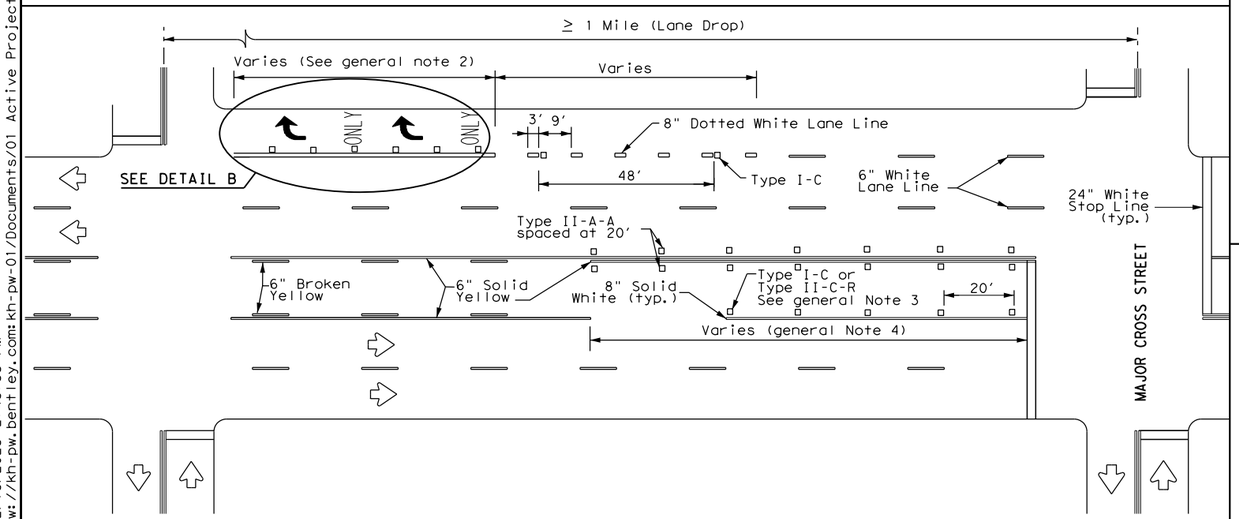

TYPICAL TWLTL AT TWO-WAY CROSS STREET AND RIGHT TURN LANE DROP

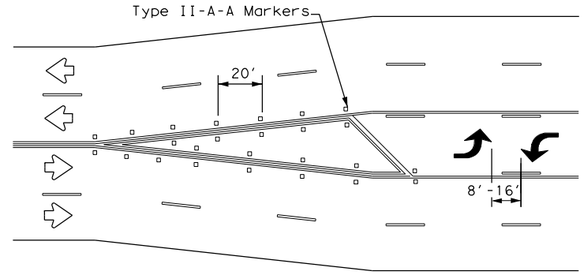

A two-way left-turn (TWLT) lane-use arrow pavement marking should be used at or just downstream from the beginning of a two-way left-turn lane within a corridor. Repeating the marking after each intersection or dedicated turn bay is not required unless stated elsewhere in the plans.

TYPICAL TRANSITION FOR TWLTL AND DIVIDED HIGHWAY

GENERAL NOTES

1. Lane use word and arrow markings shall be used where through lanes approaching an intersection become mandatory turn lanes. Lane use word and arrow markings should be used in auxiliary lanes of substantial length. Lane use arrow markings or word and arrow markings may be used in other lanes and turn bays for emphasis. Details for words and arrows are as shown in the Standard Highway Sign Designs for Texas.
2. When lane-use words and arrow markings are used, two sets of arrows should be used if the length of the bay is greater than 180 feet. When a single lane use arrow or word and arrow marking is used for a short turn lane, it should be located at or near the upstream end of the full-width turn lane.
3. Use raised pavement marker Type I-C with undivided highways, flush medians and two way left turn lanes. Use raised pavement marker Type II-C-R with divided highways and raised medians.
4. Length of turn bays, including taper, deceleration, and storage lengths shall be as shown on the plans or as directed by the Engineer. See Chapter 3 of the Roadway Design Manual for additional information on turning lanes or storage lengths.

MATERIAL SPECIFICATIONS	
PAVEMENT MARKERS (REFLECTORIZED)	DMS-4200
EPOXY AND ADHESIVES	DMS-6100
BITUMINOUS ADHESIVE FOR PAVEMENT MARKERS	DMS-6130
TRAFFIC PAINT	DMS-8200
HOT APPLIED THERMOPLASTIC	DMS-8220
PERMANENT PREFABRICATED PAVEMENT MARKINGS	DMS-8240

All pavement marking materials shall meet the required Departmental Material Specifications as specified by the plans.

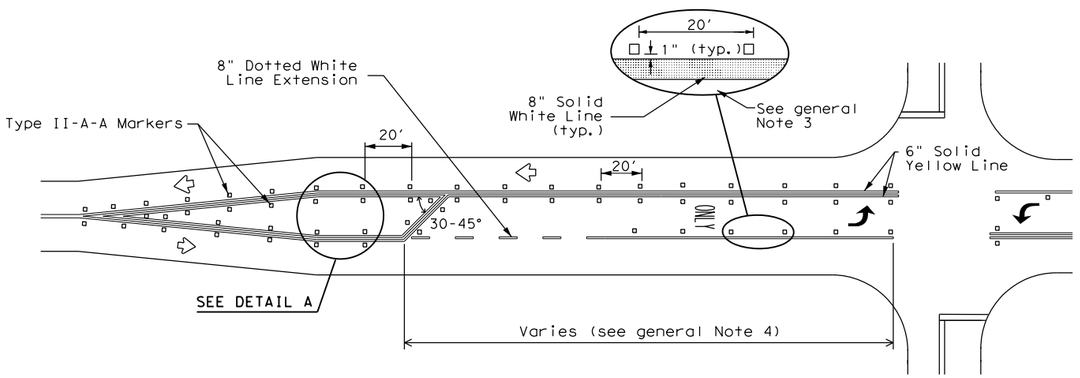

TYPICAL TWO-LANE ROADWAY INTERSECTION WITH LEFT TURN BAYS

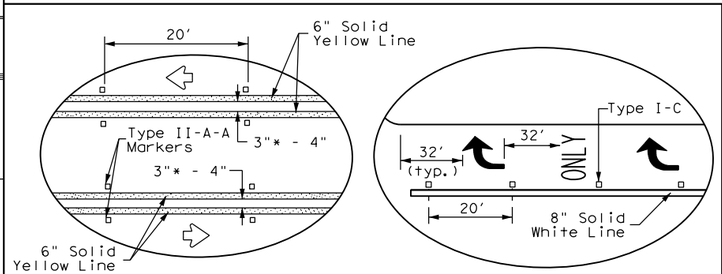

DETAIL A

DETAIL B

* 2" minimum allowed for restripe projects when approved by the Engineer.

Texas Department of Transportation

Traffic Safety Division Standard

TWO-WAY LEFT TURN LANES, RURAL LEFT TURN BAYS, AND LANE REDUCTION PAVEMENT MARKINGS PM(3)-22

FILE: pm3-22.dgn	DN:	CK:	DW:	CK:
© TxDOT December 2022	CONT	SECT	JOB	HIGHWAY
REVISIONS 4-98 3-03 6-20 5-00 2-10 12-22 8-00 2-12	0337	01	053	SH 29
	DIST	COUNTY		SHEET NO.
	AUS	WILLIAMSON		227

22C

DISCLAIMER:
The use of this standard is governed by the "Texas Engineering Practice Act". No warranty of any kind is made by TxDOT for any purpose whatsoever. TxDOT assumes no responsibility for the conversion of this standard to other formats or for incorrect results or damages resulting from its use.

DATE: 12/18/2025 2:49:22 PM
FILE: pw://kh-pw.bentley.com:kh-pw-01/Documents/01 Active Projects/TX-GEO-069284/005/Design/pm4-22a.dgn

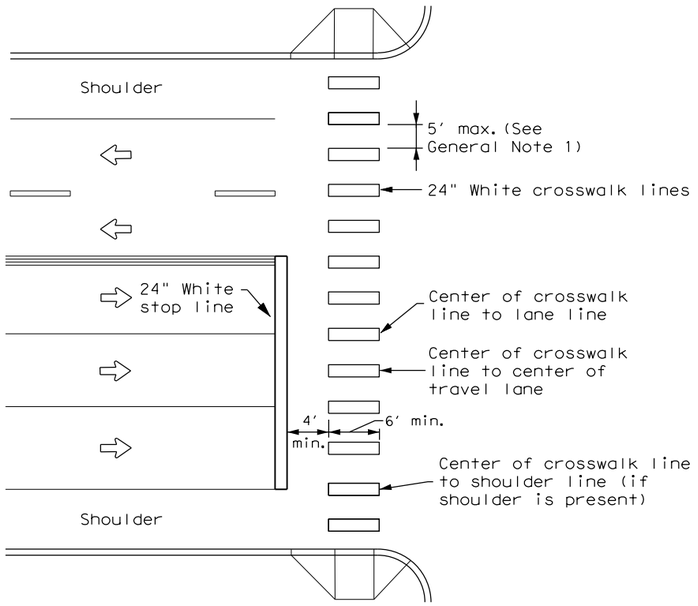

HIGH-VISIBILITY LONGITUDINAL CROSSWALK
AT CONTROLLED APPROACH

GENERAL NOTES

1. Longitudinal crosswalk lines should not be placed in the wheel path of vehicles. Center the crosswalk lines on travel lanes, lane lines, and shoulder lines (if present).
2. A minimum 6" clear distance shall be provided to the curb face. If the last crosswalk line falls into this distance it must be omitted.
3. For divided roadways, adjustments in spacing of the crosswalk lines should be made in the median so that the crosswalk lines are maintained in their proper location across the travel portion of the roadway.
4. At skewed crosswalks, the crosswalk lines are to remain parallel to the lane lines.
5. Each crosswalk shall be a minimum of 6' wide.
6. The High-Visibility Longitudinal Crosswalk is the preferred crosswalk pattern on State Highways. Other crosswalk patterns as shown in the "Texas Manual on Uniform Traffic Control Devices" may be used. All crosswalk designs and dimension shall comply with the "Texas Manual on Uniform Traffic Control Devices."
7. Final placement of Stop Bar and Crosswalk shall be approved by the Engineer in the field.

MATERIAL SPECIFICATIONS	
PAVEMENT MARKERS (REFLECTORIZED)	DMS-4200
EPOXY AND ADHESIVES	DMS-6100
BITUMINOUS ADHESIVE FOR PAVEMENT MARKERS	DMS-6130
TRAFFIC PAINT	DMS-8200
HOT APPLIED THERMOPLASTIC	DMS-8220
PERMANENT PREFABRICATED PAVEMENT MARKINGS	DMS-8240

All pavement marking materials shall meet the required Departmental Material Specifications as specified by the plans.

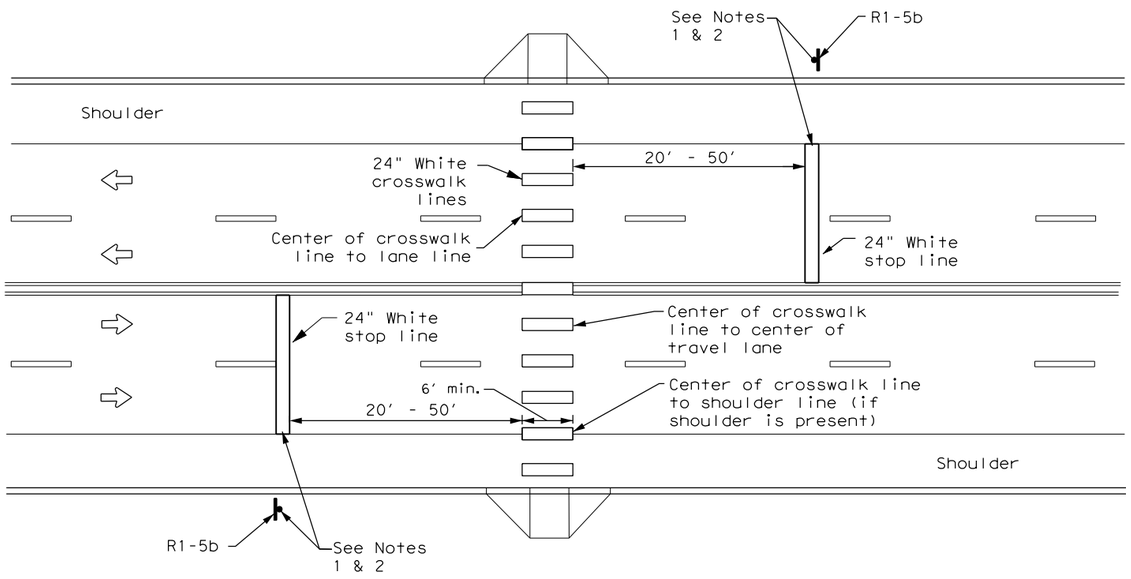

UNSIGNALIZED MIDBLOCK HIGH-VISIBILITY
LONGITUDINAL CROSSWALK

NOTES:

1. Use stop bars with Stop Here For Pedestrians (R1-5b) signs at unsignalized midblock cross walks.
2. Use stop bars with STOP HERE ON RED (R10-6 or R10-6a) signs at mid block crosswalks controlled by traffic signals or pedestrian hybrid beacons.

Texas Department of Transportation

Traffic Safety Division Standard

CROSSWALK PAVEMENT MARKINGS

PM(4)-22A

FILE: pm4-22a.dgn	DN:	CK:	DW:	CK:
© TxDOT December 2022	CONT	SECT	JOB	HIGHWAY
REVISIONS	0337	01	053	SH 29
6-20	DIST	COUNTY		SHEET NO.
6-22	AUS	WILLIAMSON		228
12-22				
22D				

DISCLAIMER:
The use of this standard is governed by the "Texas Engineering Practice Act". No warranty of any kind is made by TxDOT for any purpose whatsoever. TxDOT assumes no responsibility for the conversion of this standard to other formats or for incorrect results or damages resulting from its use.

DATE: 12/18/2025 2:49:42 PM
FILE: pw://kh-pw.bentley.com:kh-pw-01/Documents/01 Active Projects/TX-GEO-069284005 - SH 29 Widening/4 - Design/Plan Set/8. Traffic/STANDARDS/dom4-25.dgn

FREEWAY DELINEATION FOR RAMPS AND ACCELERATION / DECELERATION LANES

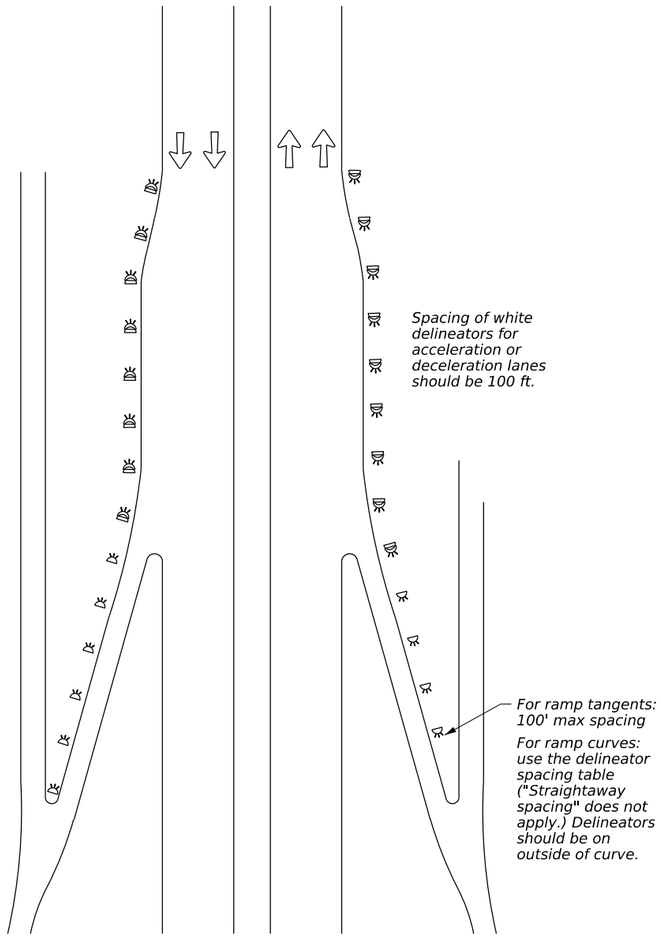

DETAIL 4a

CROSSOVERS

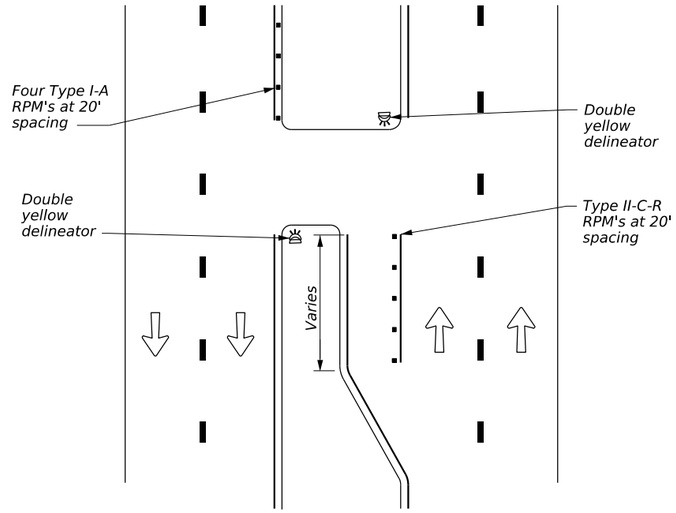

DETAIL 4b

FOR CULVERTS WITHOUT METAL BEAM GUARD FENCE (MBGF)

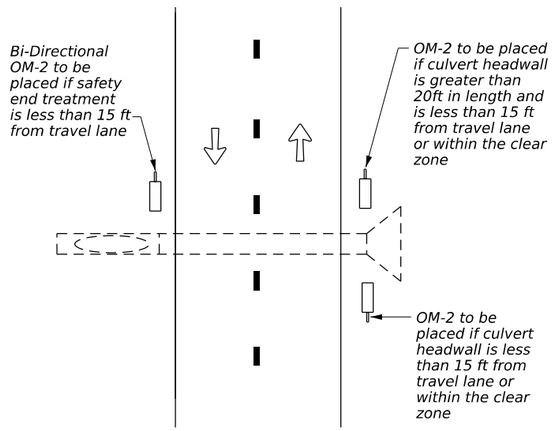

DETAIL 4c

NOTES

1. *This detail applies for all existing culverts without MBGF, for application of OMs. New bridge-class culverts require safety end treatments, MBGF, or bridge railing. See the TxDOT Bridge Railing Manual.*
2. *For culverts with MBGF, see Sheet 5.*

TYPICAL APPLICATION OF DEAD END BARRICADE

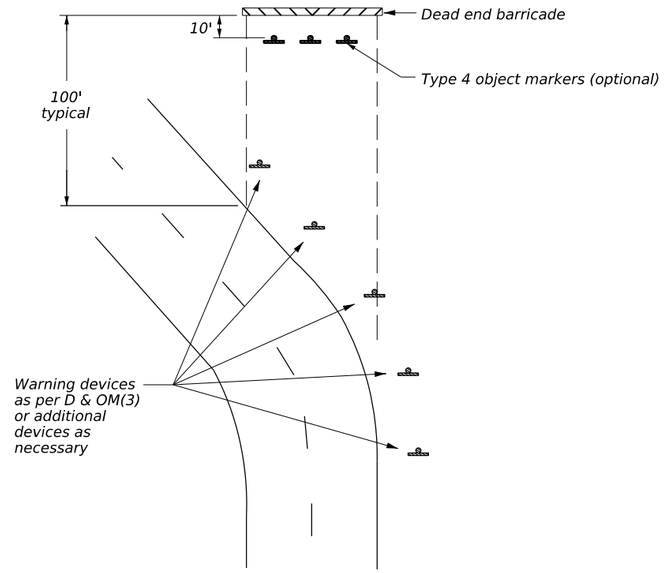

DETAIL 4d

TYPICAL DEAD END BARRICADE INSTALLATION

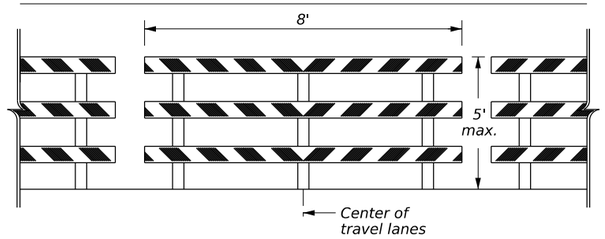

DETAIL 4e

NOTES

1. *Barricade striping shall be red and white reflective sheeting for all permanent road closures.*
2. *Barricade striping is red and white sloping toward the center of the roadway.*
3. *Type 3 Barricade Supports should be anchored to soil or pavement as described in the Compliant Work Zone Traffic Control Devices list (CWZTCD).*

LEGEND

	Delineator
	Double delineator
	OM-2
	Sign
	Raised Pavement Marker (RPM)
	Traffic Flow

Texas Department of Transportation

Traffic Safety Division Standard

DELINEATOR & OBJECT MARKER PLACEMENT DETAILS

D & OM(4)-25

FILE: dom4-25.dgn	DN: TxDOT	CK: TxDOT	DW: TxDOT	CK: TxDOT
©TxDOT May 2025	CONT	SECT	JOB	HIGHWAY
REVISIONS	0337	01	053	SH 29
8-04 5-25	DIST	COUNTY		SHEET NO.
3-15	AUS	WILLIAMSON		229
7-20				

20D

DISCLAIMER: The use of this standard is governed by the "Texas Engineering Practice Act". No warranty of any kind is made by TxDOT for any purpose whatsoever. TxDOT assumes no responsibility for the conversion of this standard to other formats or for incorrect results or damages resulting from its use.

DATE: 12/18/2025 2:50:10 PM
FILE: pw://kh-pw.bentley.com:kh-pw-01/Documents/01 Active Projects/TX-GEO-0692840005 - SH 29 Widening/4 - Design/Plan Set/8. Traffic/STANDARDS/smdgen.dgn

SIGN SUPPORT DESCRIPTIVE CODES

(Descriptive Codes correspond to project estimate and quantities sheets)

SM RD SGN ASSM TY XXXXX(X)XX(X-XXXX)

Post Type

FRP = Fiberglass Reinforced Plastic Pipe (see SMD(FRP))
TWT = Thin-Walled Tubing (see SMD(TWT))
10BWG = 10 BWG Tubing (see SMD(SLIP-1) to (SLIP-3))
S80 = Schedule 80 Pipe (see SMD(SLIP-1) to (SLIP-3))

Number of Posts (1 or 2)

Anchor Type

UA = Universal Anchor - Concreted (see SMD(FRP) and (TWT))
UB = Universal Anchor - Bolted down (see SMD(FRP) and (TWT))
WS = Wedge Anchor Steel - (see SMD(TWT))
WP = Wedge Anchor Plastic (see SMD(TWT))
SA = Slipbase - Concreted (see SMD(SLIP-1) to (SLIP-3))
SB = Slipbase - Bolted Down (see SMD(SLIP-1) to (SLIP-3))

Sign Mounting Designation

P = Prefab. "Plain" (see SMD(SLIP-1) to (SLIP-3), (TWT), (FRP))
T = Prefab. "T" (see SMD(SLIP-1) to (SLIP-3), (TWT))
U = Prefab. "U" (see SMD(SLIP-1) to (SLIP-3))
IF REQUIRED
1EXT or 2EXT = Number of Extensions (see SMD(SLIP-1) to (SLIP-3), (TWT))
BM = Extruded Wind Beam (see SMD(SLIP-1) to (SLIP-3))
WC = 1.12 #/ft Wing Channel (see SMD(SLIP-1) to (SLIP-3))
EXAL = Extruded Aluminum Sign Panels (see SMD(SLIP-1))

REQUIRED CLEARANCE FOR BREAKAWAY SUPPORT

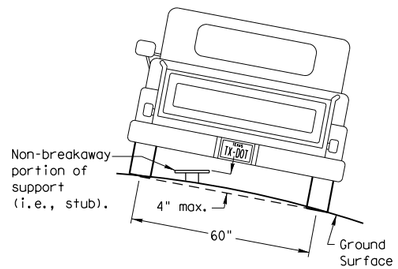

To avoid vehicle undercarriage snagging, any substantial remains of a breakaway support, when it is broken away, should not project more than 4 inches above a 60-inch chord (i.e., typical space between wheel paths).

No more than 2 sign posts should be located within a 7 ft. circle.

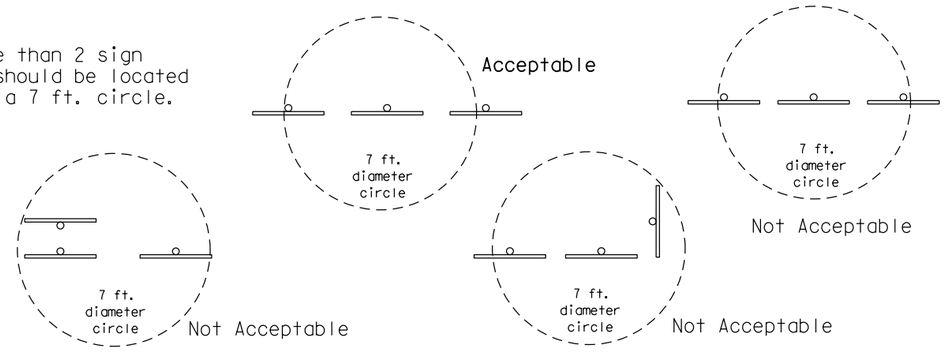

SIGN LOCATION

PAVED SHOULDERS

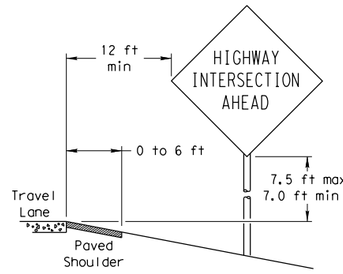

LESS THAN 6 FT. WIDE

When the shoulder is 6 ft. or less in width, the sign must be placed at least 12 ft. from the edge of the travel lane.

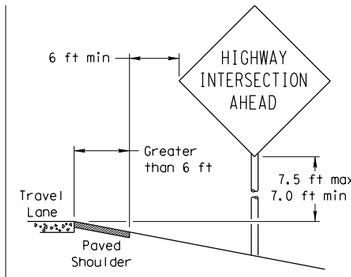

GREATER THAN 6 FT. WIDE

When the shoulder is greater than 6 ft in width, the sign must be placed at least 6 ft. from the edge of the shoulder.

BEHIND BARRIER

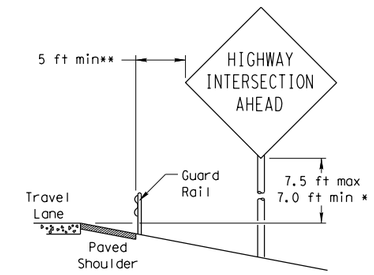

BEHIND GUARDRAIL

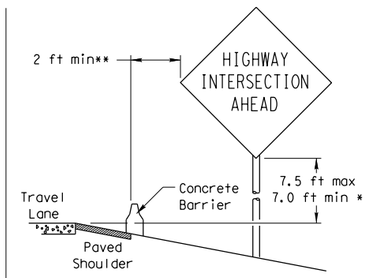

BEHIND CONCRETE BARRIER

**Sign clearance based on distance required for proper guard rail or concrete barrier performance.

T-INTERSECTION

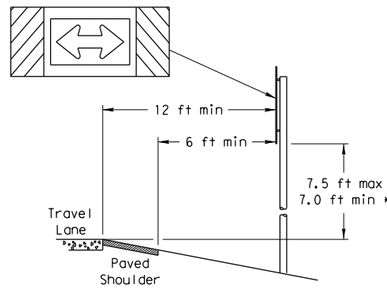

When this sign is needed at the end of a two-lane, two way roadway, the right edge of the sign should be in line with the centerline of the roadway. Place as close to ROW as practical.

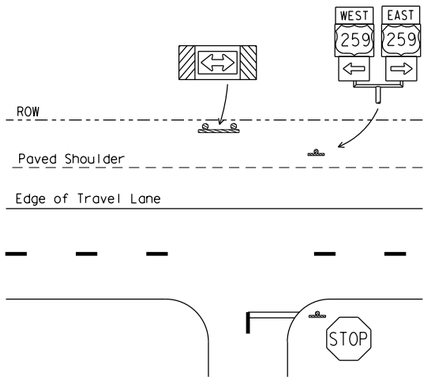

* Signs shall be mounted using the following condition that results in the greatest sign elevation:

(1) a minimum of 7 to a maximum of 7.5 feet above the edge of the travel lane or

(2) a minimum of 7 to a maximum of 7.5 feet above the grade at the base of the support when sign is installed on the backslope.

The maximum values may be increased when directed by the Engineer.

See the Traffic Operations Division website for detailed drawings of sign clamps, Triangular Slipbase System components and Wedge Anchor System components.

The website address is:
http://www.txdot.gov/publications/traffic.htm

TYPICAL SIGN ATTACHMENT DETAIL

Single Signs

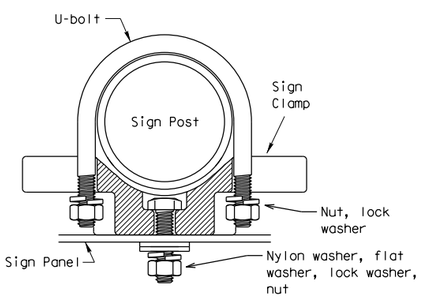

Back-to-Back Signs

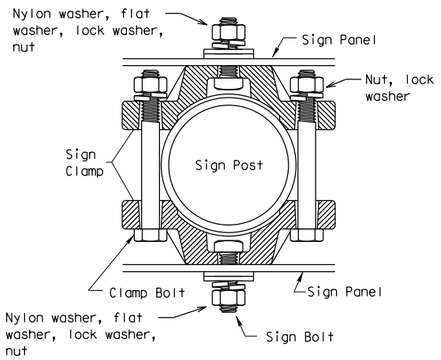

Bolts used to mount sign panels to the clamp are 5/16-18 UNC galvanized square head with nut, nylon washer, flat washer and lock washer. The bolt length is 1 inch for aluminum.

When two sign clamps are used to mount signs back-to-back, use a 5/16-18 UNC galvanized hex head per ASTM A307 with nut and helical-spring lock washer. The approximate bolt lengths for various post sizes and sign clamp types are given in the table at right. The bolt length may need to be adjusted depending upon field conditions.

Sign clamps may be either the specific size clamp or the universal clamp.

Pipe Diameter	Approximate Bolt Length	
	Specific Clamp	Universal Clamp
2" nominal	3"	3 or 3 1/2"
2 1/2" nominal	3 or 3 1/2"	3 1/2 or 4"
3" nominal	3 1/2 or 4"	4 1/2"

SIGNS WITH PLAQUES

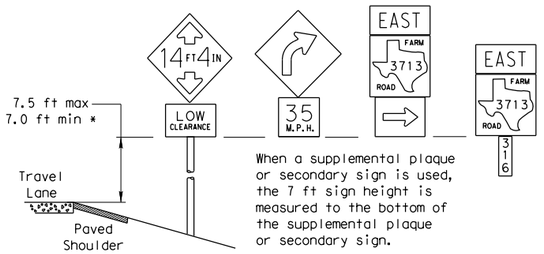

When a supplemental plaque or secondary sign is used, the 7 ft sign height is measured to the bottom of the supplemental plaque or secondary sign.

CURB & GUTTER OR RAISED ISLAND

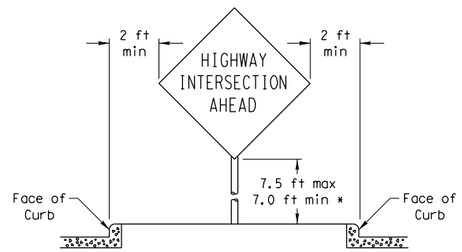

RESTRICTED RIGHT-OF-WAY

(When 6 ft min. is not possible.)

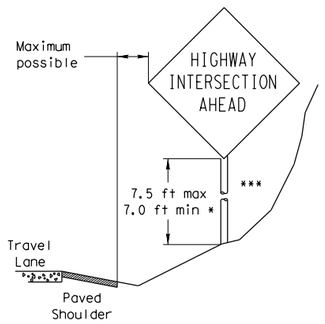

Right-of-way restrictions may be created by rocks, water, vegetation, forest, buildings, a narrow island, or other factors.

In situations where a lateral restriction prevents the minimum horizontal clearance from the edge of the travel lane, signs should be placed as far from the travel lane as practical.

*** Post may be shorter if protected by guardrail or if Engineer determines the post could not be hit due to extreme slope.

Texas Department of Transportation
Traffic Operations Division

SIGN MOUNTING DETAILS SMALL ROADSIDE SIGNS GENERAL NOTES & DETAILS

SMD(GEN)-08

© TxDOT July 2002

REVISIONS	DN: TXDOT	CK: TXDOT	DW: TXDOT	CK: TXDOT
9-08	CONT	SECT	JOB	HIGHWAY
	0337	01	053	SH 29
	DIST	COUNTY		SHEET NO.
	AUS	WILLIAMSON		230

DISCLAIMER: The use of this standard is governed by the "Texas Engineering Practice Act". No warranty of any kind is made by TxDOT for any purpose whatsoever. TxDOT assumes no responsibility for the conversion of this standard to other formats or for incorrect results or damages resulting from its use.

DATE: 12/18/2025 2:50:30 PM
FILE: pw://kh-pw.bentley.com:kh-pw-01/Documents/01 Active Projects/TX-GEO-069284005 - SH 29 Widening/4 - Design/Plan Set/8. Traffic/STANDARDS/smds1.dgn

TRIANGULAR SLIPBASE INSTALLATION GENERAL REQUIREMENTS

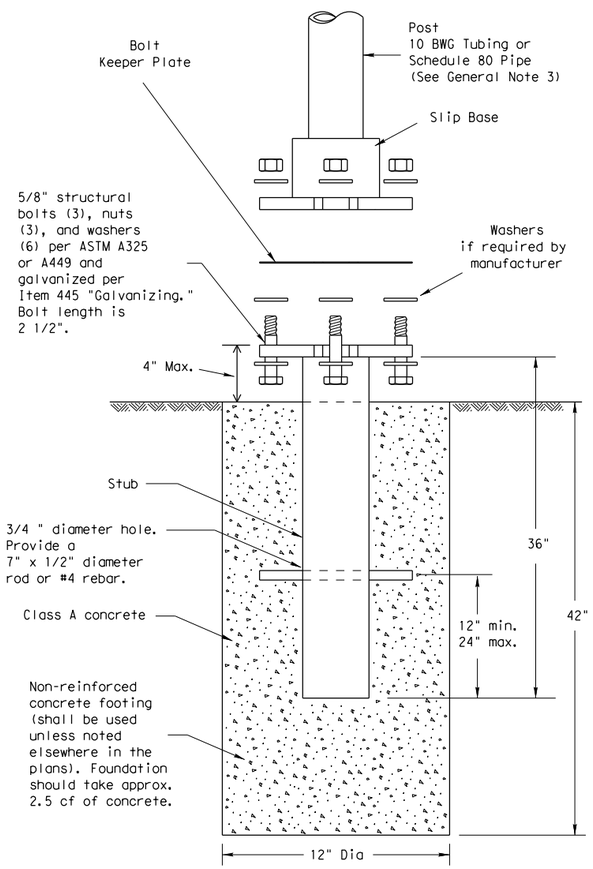

SM RD SGN ASSM TY XXXXX(X)SA(X-XXXX)

NOTE

There are various devices approved for the Triangular Slipbase System. Please reference the Material Producer List for approved slip base systems. http://www.txdot.gov/business/producer_list.htm The devices shall be installed per manufacturers' recommendations. Installation procedures shall be provided to the Engineer by Contractor.

GENERAL NOTES:

1. Slip base shall be permanently marked to indicate manufacturer. Method, design, and location of marking are subject to approval of the TxDOT Traffic Standards Engineer.
2. Material used as post with this system shall conform to the following specifications:
   10 BWG Tubing (2.875" outside diameter)
   - 0.134" nominal wall thickness
   - Seamless or electric-resistance welded steel tubing or pipe
   - Steel shall be HSLAS Gr 55 per ASTM A1011 or ASTM A1008
   - Other steels may be used if they meet the following:
     - 55,000 PSI minimum yield strength
     - 70,000 PSI minimum tensile strength
     - 20% minimum elongation in 2"
   - Wall thickness (uncoated) shall be within the range of 0.122" to 0.138"
   - Outside diameter (uncoated) shall be within the range of 2.867" to 2.883"
   - Galvanization per ASTM A123 or ASTM A653 G210. For precoated steel tubing (ASTM A653), recoat tube outside diameter weld seam by metallizing with zinc wire per ASTM B833.

   Schedule 80 Pipe (2.875" outside diameter)
   - 0.276" nominal wall thickness
   - Steel tubing per ASTM A500 Gr C
   - Other seamless or electric-resistance welded steel tubing or pipe with equivalent outside diameter and wall thickness may be used if they meet the following:
     - 46,000 PSI minimum yield strength
     - 62,000 PSI minimum tensile strength
     - 21% minimum elongation in 2"
   - Wall thickness (uncoated) shall be within the range of 0.248" to 0.304"
   - Outside diameter (uncoated) shall be within the range of 2.855" to 2.895"
   - Galvanization per ASTM A123
3. See the Traffic Operations Division website for detailed drawings of sign clamps and Texas Universal Triangular Slipbase System components. The website address is: http://www.txdot.gov/publications/traffic.htm
4. Sign supports shall not be spliced except where shown. Sign support posts shall not be spliced.

ASSEMBLY PROCEDURE

Foundation
1. Prepare 12-inch diameter by 42-inch deep hole. If solid rock is encountered, the depth of the foundation may be reduced such that it is embedded a minimum of 18 inches into the solid rock.
2. The Engineer may permit batches of concrete less than 2 cubic yards to be mixed with a portable, motor-driven concrete mixer. For small placements less than 0.5 cubic yards, hand mixing in a suitable container may be allowed by Engineer. Concrete shall be Class A.
3. Push the pipe end of the slip base stub into the center of the concrete. Rotate the stub back and forth while pushing it down into the concrete to assure good contact between the concrete and stub. Continue to work the stub into the concrete until it is between 2 to 4 inches above the ground.
4. Plumb the stub. Allow a minimum of 4 days to set, unless otherwise directed by the Engineer.
5. The triangular slipbase system is multidirectional and is designed to release when struck from any direction.

Support
1. Cut support so that the bottom of the sign will be 7 to 7.5 feet above the edge of the travelway (i.e., edge of the closest lane) when slip plate is below the edge of pavement or 7 to 7.5 feet above slip plate when the slip plate is above the edge of the travelway. The cut shall be plumb and straight.
2. Attach sign to support using connections shown. When multiple signs are installed on the same support, ensure the minimum clearance between each sign is maintained. See SMD(SLIP-2) for clearances based on sign types.

CONCRETE ANCHOR

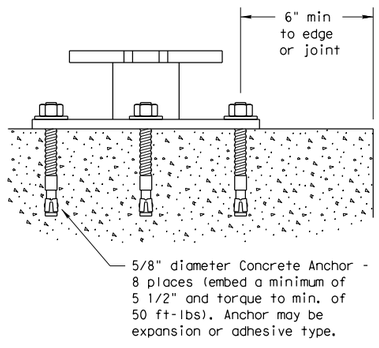

SM RD SGN ASSM TY XXXXX(X)SB(X-XXXX)

Concrete anchor consists of 5/8" diameter stud bolt with UNC series bolt threads on the upper end. Heavy hex nut per ASTM A563, and hardened washer per ASTM F436. The stud bolt shall have a minimum yield and ultimate tensile strength of 50 and 75 KSI, respectively. Nuts, bolts and washers shall be galvanized per Item 445, "Galvanizing." Adhesive type anchors shall have stud bolts installed with Type III epoxy per DMS-6100, "Epoxies and Adhesives." Adhesive anchors may be loaded after adequate epoxy cure time per the manufacturer's recommendations. Top of bolt shall extend at least flush with top of the nut when installed. The anchor, when installed in 4000 psi normal-weight concrete with a 5 1/2" minimum embedment, shall have a minimum allowable tension and shear of 3900 and 3100 psi, respectively.

Texas Department of Transportation
Traffic Operations Division

SIGN MOUNTING DETAILS SMALL ROADSIDE SIGNS TRIANGULAR SLIPBASE SYSTEM

SMD(SLIP-1)-08

©TxDOT July 2002

DN: TXDOT	CK: TXDOT	DW: TXDOT	CK: TXDOT

REVISIONS
9-08

CONT	SECT	JOB	HIGHWAY
0337	01	053	SH 29

DIST	COUNTY	SHEET NO.
AUS	WILLIAMSON	231

DISCLAIMER: The use of this standard is governed by the "Texas Engineering Practice Act". No warranty of any kind is made by TxDOT for any purpose whatsoever. TxDOT assumes no responsibility for the conversion of this standard to other formats or for incorrect results or damages resulting from its use.

DATE: 12/18/2025 2:51:01 PM
FILE: dw://kh-pw.bentley.com:kh-pw-01/Documents/01 Active Projects/TX-GEO-069284005 - SH 29 Widening/4 - Design/Plan Set/8. Traffic/STANDARDS/smds2.dgn

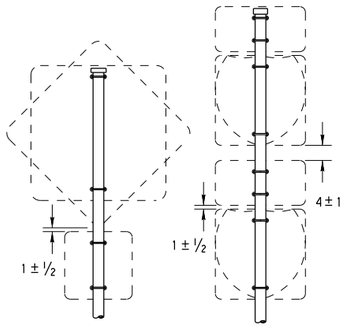

SM RD SGN ASSM TY XXXXX(1)XX(P)

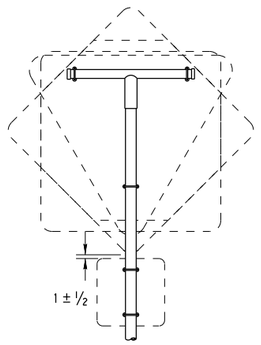

SM RD SGN ASSM TY XXXXX(1)XX(T)

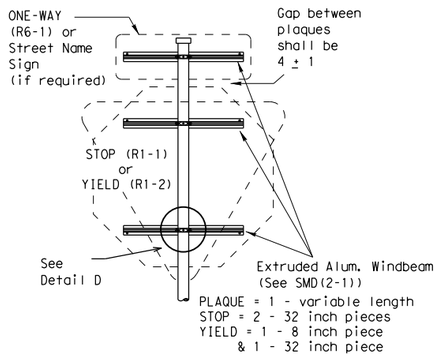

SM RD SGN ASSM TY XXXXX(1)XX(P-BM)

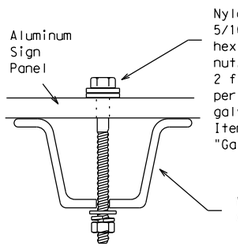

Detail A

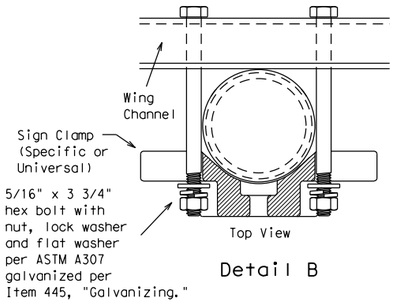

Detail B

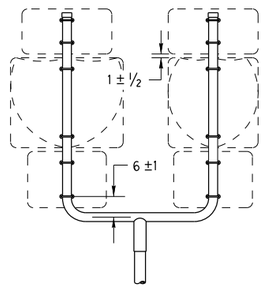

SM RD SGN ASSM TY XXXXX(1)XX(U)

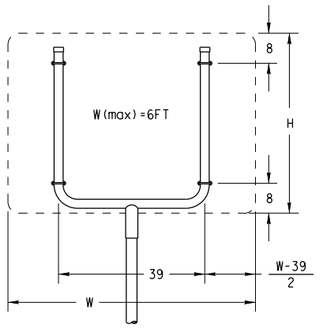

SM RD SGN ASSM TY XXXXX(1)XX(U)

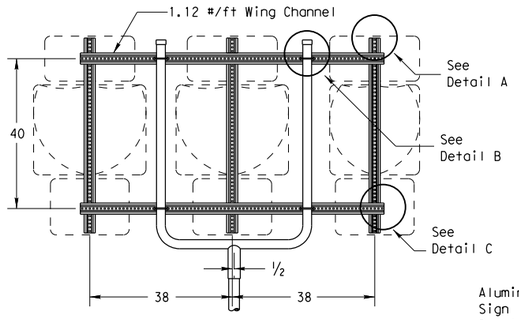

SM RD SGN ASSM TY XXXXX(1)XX(U-WC)
(See Note 11)

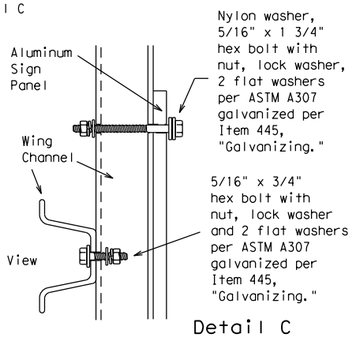

Detail C

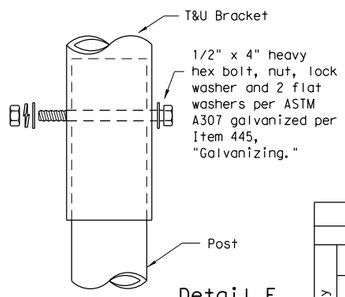

Detail E

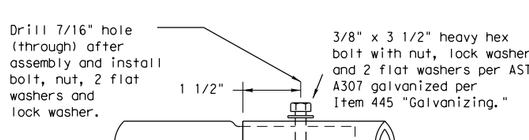

Detail F

Splices shall only be allowed behind the sign substrate.

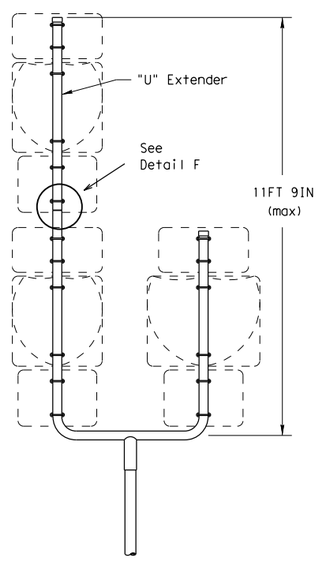

SM RD SGN ASSM TY S80(1)XX(U-1EXT)

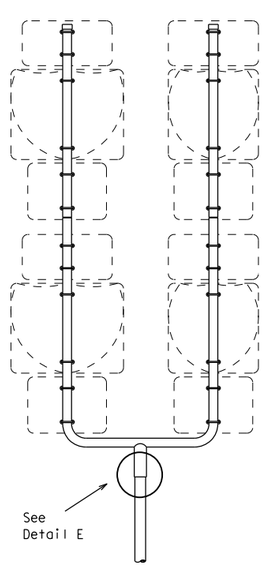

SM RD SGN ASSM TY S80(1)XX(U-2EXT)

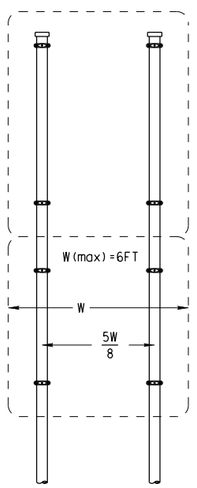

SM RD SGN ASSYM TY XXXXX(2)XX(P)

SIDE VIEW

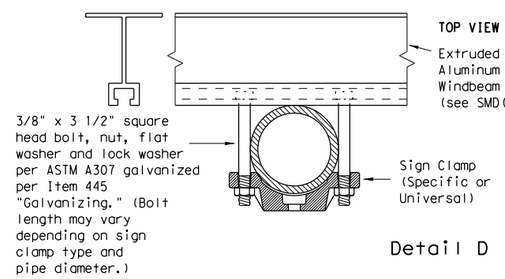

Detail D

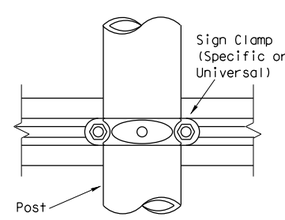

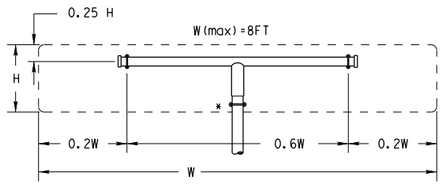

SM RD SGN ASSM TY XXXXX(1)XX(T)
(* - See Note 12)

All dimensions are in english unless detailed otherwise.

FRICTION CAP DETAIL

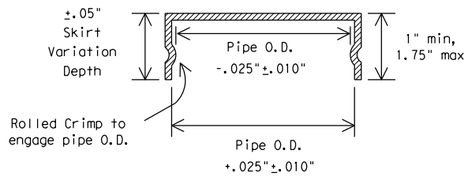

Friction caps may be manufactured from hot rolled or cold rolled steel sheets. The minimum sheet metal thickness shall be 24 gauge for all cap sizes.

The rim edges shall be reasonably straight and smooth. Caps shall be sized and formed in such a manner as to produce a drive-on friction fit and have no tendency to rock when seated on the pipe. The depth shall be sufficient to give positive protection against entrance of rainwater. They shall be free of sharp creases or indentations and show no evidence of metal fracture.

Caps shall have an electrodeposited coating of zinc in accordance with the requirements of ASTM B633 Class FE/ZN 8.

GENERAL NOTES:

1.

SIGN SUPPORT	# OF POSTS	MAX. SIGN AREA
10 BWG	1	16 SF
10 BWG	2	32 SF
Sch 80	1	32 SF
Sch 80	2	64 SF

2. The Engineer may require that a Schedule 80 post be used in place of a 10 BWG where a sign height is abnormally high due to a fill slope.
3. Sign supports shall not be spliced except where shown. Sign support posts shall not be spliced.
4. Aluminum sign blanks shall conform to Departmental Material Specifications DMS-7110 and shall have the following minimum thicknesses: 0.080 for signs less than 7.5 sq. ft., 0.100 for signs 7.5 to 15 sq. ft., and 0.125 for signs greater than 15 sq. ft.
5. Signs that require specific supports due to reasons in addition to windloading are indicated on the "REQUIRED SUPPORT" table on this sheet.
6. For horizontal rectangular signs fabricated from flat aluminum, T-brackets are used for signs 24 inches or less in height. U-brackets are used for signs of greater height.
7. When two triangular slipbase supports are used to support a single sign, they shall not be "rigidly" connected to each other except through the sign panel. This will allow each support to act independently when impacted by an errant vehicle.
8. Wing channel shall meet ASTM A 1011 SS Gr 50 and be galvanized per ASTM A 123.
9. Excess pipe, wing channel, or windbeam shall be cut off so that it does not extend beyond the sign panel (i.e., excess support shall not be visible when the sign is viewed from the front.) Repair galvanized coating at cut support ends per Item 445, "Galvanizing."
10. Additional route markers may be added vertically, provided the total sign area does not exceed the maximum allowable amount per Note 1.
11. Additional sign clamp required on the "T-bracket" post for 24 inch height signs. Place the clamp 3 inches above bottom of sign when possible.
12. Post open ends shall be fitted with Friction Caps.
13. Sign blanks shall be the sizes and shapes shown on the plans.

REQUIRED SUPPORT

	SIGN DESCRIPTION	SUPPORT
Regulatory	48-inch STOP sign (R1-1)	TY 10BWG(1)XX(T) TY 10BWG(1)XX(P-BM)
	60-inch YIELD sign (R1-2)	TY 10BWG(1)XX(T) TY 10BWG(1)XX(P-BM)
	48x16-inch ONE-WAY sign (R6-1)	TY 10BWG(1)XX(T) TY 10BWG(1)XX(P-BM)
	36x48, 48x36, and 48x48-inch signs	TY 10BWG(1)XX(T)
	48x60-inch signs	TY S80(1)XX(T)
Warning	48x48-inch signs (diamond or square)	TY 10BWG(1)XX(T)
	48x60-inch signs	TY S80(1)XX(T)
	48-inch Advance School X-ing sign (S1-1)	TY 10BWG(1)XX(T)
	48-inch School X-ing sign (S2-1)	TY 10BWG(1)XX(T)
	Large Arrow sign (W1-6 & W1-7)	TY 10BWG(1)XX(T)

Texas Department of Transportation
Traffic Operations Division

SIGN MOUNTING DETAILS SMALL ROADSIDE SIGNS TRIANGULAR SLIPBASE SYSTEM

SMD(SLIP-2)-08

©TxDOT July 2002

REVISIONS	DN: TXDOT	CK: TXDOT	DW: TXDOT	CK: TXDOT
9-08	CONT	SECT	JOB	HIGHWAY
	0337	01	053	SH 29
	DIST	COUNTY		SHEET NO.
	AUS	WILLIAMSON		232

26C

DISCLAIMER: The use of this standard is governed by the "Texas Engineering Practice Act". No warranty of any kind is made by TxDOT for any purpose whatsoever. TxDOT assumes no responsibility for the conversion of this standard to other formats or for incorrect results or damages resulting from its use.

DATE: 12/18/2025 2:51:20 PM
FILE: pw://kh-pw.bentley.com:kh-pw-01/Documents/01 Active Projects/TX-GEO-069284005 - SH 29 Widening/4 - Design/Plan Set/8. Traffic/STANDARDS/smds3.dgn

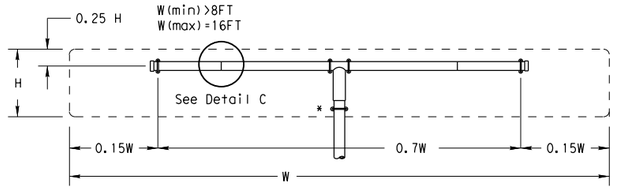

SM RD SGN ASSM TY XXXXX(1)XX(T-2EXT)
(* - See Note 12)

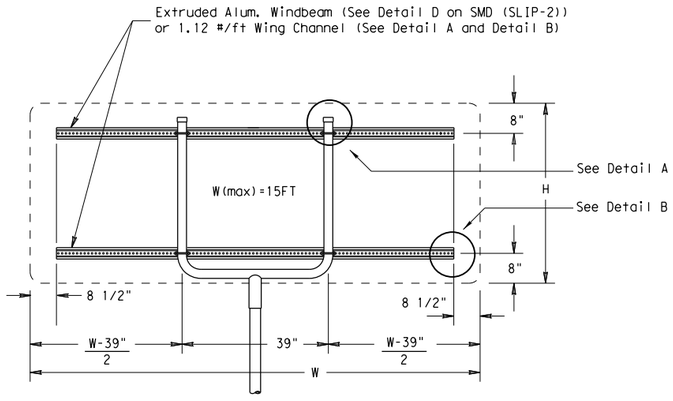

SM RD SGN ASSM TY XXXXX(1)XX(U-XX)

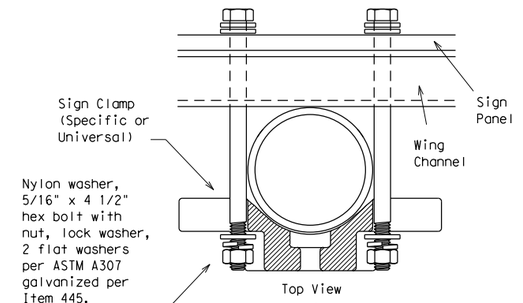

Detail A

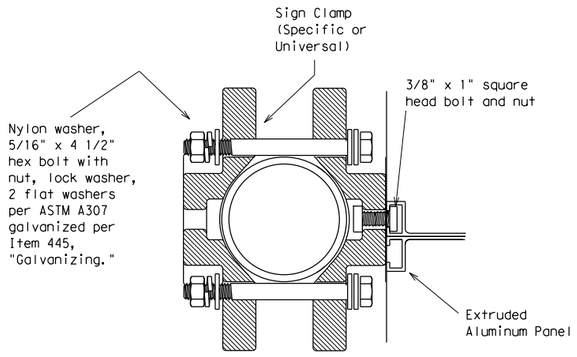

Detail D
EXTRUDED ALUMINUM SIGN WITH T BRACKET

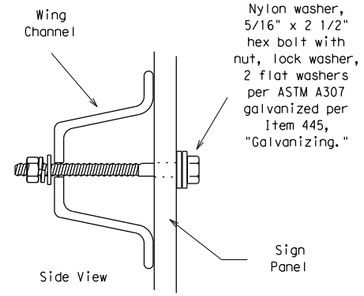

Detail B

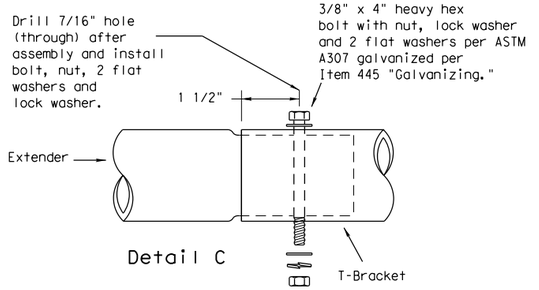

Detail C

Splices shall only be allowed behind the sign substrate.

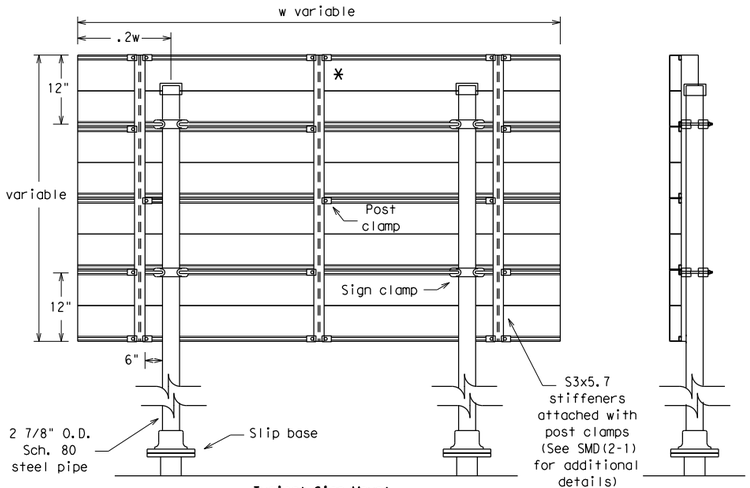

Typical Sign Mount

SM RD SGN ASSM TY S80(2)XX(P-EXAL)

* Additional stiffener placed at approximate center of signs when sign width is greater than 10'.

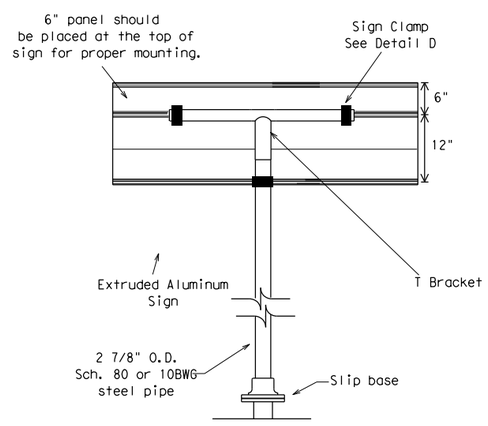

Extruded Aluminum Sign
With T Bracket

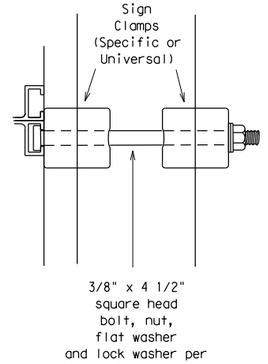

Detail E

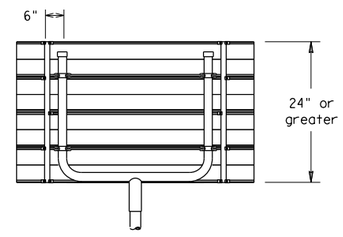

Use Extruded Alum. Windbeam as stiffeners
See SMD (2-1) for additional details

See Detail E
for clamp installation

GENERAL NOTES:

SIGN SUPPORT	# OF POSTS	MAX. SIGN AREA
10 BWG	1	16 SF
10 BWG	2	32 SF
Sch 80	1	32 SF
Sch 80	2	64 SF

1. The Engineer may require that a Schedule 80 post be used in place of a 10 BWG where a sign height is abnormally high due to a fill slope.
2. Sign supports shall not be spliced except where shown. Sign support posts shall not be spliced.
3. Aluminum sign blanks shall conform to Departmental Material Specifications DMS-7110 and shall have the following minimum thicknesses: 0.080 for signs less than 7.5 sq. ft., 0.100 for signs 7.5 to 15 sq. ft., and 0.125 for signs greater than 15 sq. ft.
4. Signs that require specific supports due to reasons in addition to windloading are indicated on the "REQUIRED SUPPORT" table on this sheet.
5. For horizontal rectangular signs fabricated from flat aluminum, T-brackets are used for signs 24 inches or less in height. U-brackets are used for signs of greater height.
6. When two triangular slipbase supports are used to support a single sign, they shall not be "rigidly" connected to each other except through the sign panel. This will allow each support to act independently when impacted by an errant vehicle.
7. Wing channel shall meet ASTM A 1011 SS Gr 50 and be galvanized per ASTM A 123.
8. Excess pipe, wing channel, or windbeam shall be cut off so that it does not extend beyond the sign panel (i.e., excess support shall not be visible when the sign is viewed from the front.) Repair galvanized coating at cut support ends per Item 445, "Galvanizing."
9. Sign blanks shall be the sizes and shapes shown on the plans.
10. Additional sign clamp required on the "T-bracket" post for 24 inch high signs. Place the clamp 3 inches above bottom of sign when possible.
11. Post open ends shall be fitted with Friction Caps.

REQUIRED SUPPORT

	SIGN DESCRIPTION	SUPPORT
Regulatory	48-inch STOP sign (R1-1)	TY 10BWG(1)XX(T) TY 10BWG(1)XX(P-BM)
	60-inch YIELD sign (R1-2)	TY 10BWG(1)XX(T) TY 10BWG(1)XX(P-BM)
	48x16-inch ONE-WAY sign (R6-1)	TY 10BWG(1)XX(T) TY 10BWG(1)XX(P-BM)
	36x48, 48x36, and 48x48-inch signs	TY 10BWG(1)XX(T)
	48x60-inch signs	TY S80(1)XX(T)
Warning	48x48-inch signs (diamond or square)	TY 10BWG(1)XX(T)
	48x60-inch signs	TY S80(1)XX(T)
	48-inch Advance School X-ing sign (S1-1)	TY 10BWG(1)XX(T)
	48-inch School X-ing sign (S2-1)	TY 10BWG(1)XX(T)
	Large Arrow sign (W1-6 & W1-7)	TY 10BWG(1)XX(T)

Texas Department of Transportation
Traffic Operations Division

SIGN MOUNTING DETAILS
SMALL ROADSIDE SIGNS
TRIANGULAR SLIPBASE SYSTEM

SMD(SLIP-3)-08

©TxDOT July 2002

REVISIONS	DN: TXDOT	CK: TXDOT	DW: TXDOT	CK: TXDOT
9-08	CONT	SECT	JOB	HIGHWAY
	0337	01	053	SH 29
	DIST	COUNTY		SHEET NO.
	AUS	WILLIAMSON		233

DISCLAIMER:
The use of this standard is governed by the "Texas Engineering Practice Act". No warranty of any kind is made by TxDOT for any purpose whatsoever. TxDOT assumes no responsibility for the conversion of this standard to other formats or for incorrect results or damages resulting from its use.

DATE: 12/18/2025 2:51:51 PM
FILE: pw://kh-pw.bentley.com:kh-pw-01/Documents/01 Active Projects/TX-GEO-069284@05/Design/Preliminary Set/Submittal 1/tlrs-17.dgn

METHOD 1: WOOD EMBEDMENT

STEPS:

Step 1. Determine sign height (Hs), width (Ws), average mounting height from bottom of sign to ground (Hbs), and temporary guide sign wind zone. Temporary guide sign wind zone is determined from Wind Velocity Worksheet. (Page 30A on the Traffic Standards web page) and Table 1.

TABLE 1

Wind Zone on Wind Velocity Worksheet	Temporary Guide Sign Wind Zone
90 mph	70 mph
80 mph	70 mph
70 mph	60 mph

Step 2. Determine number of posts and post size from temporary guide sign wind zone using Hs, Ws, Hbs below (Figure 1: 60 mph and Figure 2: 70 mph). Determine spacing of posts (A) and distance from edge of sign to outside posts (0.5A) from 'Post Spacing and Sign Placement' detail on TLRS(2).

Step 3. Determine minimum post embedment depth from Table 2. For cohesionless soils, another method should be used to determine embedment depth.

TABLE 2

Wooden Post Size	Embedment Depth (ft)
4x6	3
6x8	4
6x10	5

Step 4. Fabricate posts using 'Wood Post' detail on TLRS(2). Attach sign (plywood or extruded aluminum) using a method on TLRS(3). Wooden parts are not required to be painted.

FIGURE 1

Average Height Above Ground (Hbs)(ft)	13-16	10-13	7-10	60 MPH Temporary Guide Sign Wind Zone	Post Qty	Post Size
Sign Face Height (Hs) (ft)	13	14	15	J	7	6" x 10"
	12	13	14	I	6	6" x 10"
	11	12	13	H	5	6" x 10"
	10	11	12	G	4	6" x 10"
	9	10	11	F	3	6" x 10"
	8	9	10	E	2	6" x 10"
	7	8	9	D	3	6" x 8"
	6	7	8	C	2	6" x 8"
	5	6	7	B	3	4" x 6"
	4	5	6	A	2	4" x 6"
	3	4	5			
	2	3	4			
	1	2	3			

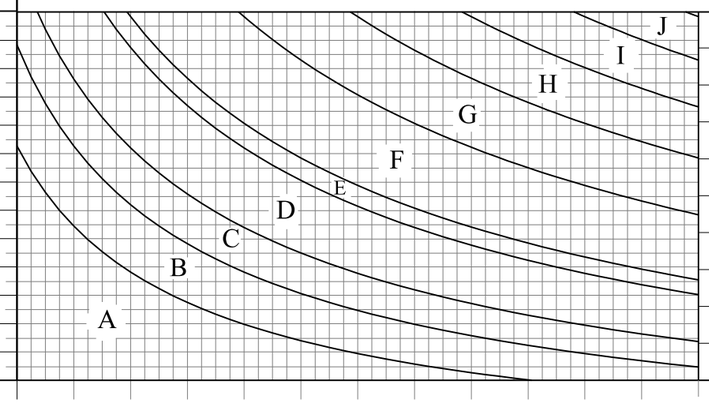

Width of Sign Face (Ws) (ft)

FIGURE 2

Average Height Above Ground (Hbs)(ft)	13-16	10-13	7-10	70 MPH Temporary Guide Sign Wind Zone	Post Qty	Post Size
Sign Face Height (Hs) (ft)	13	14	15	K	9	6" x 10"
	12	13	14	J	8	6" x 10"
	11	12	13	I	7	6" x 10"
	10	11	12	H	6	6" x 10"
	9	10	11	G	5	6" x 10"
	8	9	10	F	4	6" x 10"
	7	8	9	E	3	6" x 10"
	6	7	8	D	2	6" x 10"
	5	6	7	C	3	6" x 8"
	4	5	6	B	2	6" x 8"
	3	4	5	A	3	4" x 6"
	2	3	4			
	1	2	3			

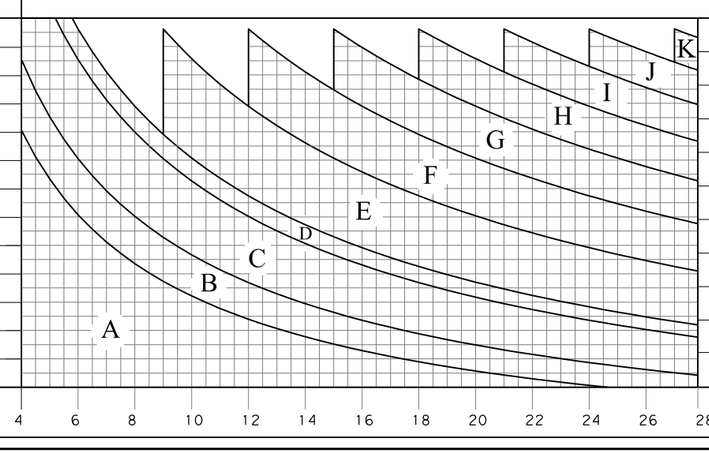

Width of Sign Face (Ws) (ft)

GENERAL NOTES

1. See plans for specifications and pay item information. Temporary guide signs required for contractor changes to traffic control plan are subsidiary to item 502.
2. Contractor may use any of the 3 methods (Wood Embedment, Steel Embedment or Wood Skid) as long as sign height requirements are met and approved by the Engineer.
3. See SMD (2-3) for details on attaching panels and plaques to parent signs.
4. Nails are not allowed in temporary sign support structures.

METHOD 2: STEEL EMBEDMENT

STEPS:

Step 1. Determine sign height (Hs), width (Ws), average mounting height from bottom of sign to ground (Hbs), and wind zone from Wind Velocity Worksheet.

Step 2. Determine number of posts, post size, and post spacing from SMD(2-3) and SMD(8W1). Alternatively, the sign posts from an existing sign may be used if 7' minimum height from pavement to bottom of sign can be maintained at new location. In this case, only a new stub post without concrete foundation is required. See Detail A and SMD(2-2) for more information.

Step 3. Determine minimum stub post embedment depth from Table 3. No concrete foundation is required. For cohesionless soils, another method should be used to determine embedment depth.

TABLE 3

Steel Support Post Size	Embedment Depth (ft)
W6x9	4
W6x12	4.5
W6x15	5
W8x18	6
W8x21	6.5
W10x22	7.5
W10x26	8
W12x26	8.5
S3x5.7	3
S4x7.7	3.5

Step 4. Attach sign using SMD(2-3) for an extruded aluminum sign or using TLRS(3) for a plywood sign.

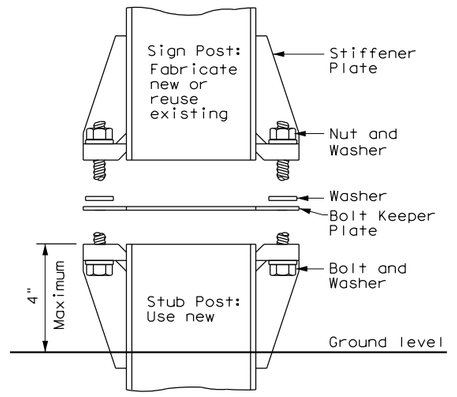

DETAIL A

SHEET 1 OF 4

Texas Department of Transportation

Traffic Operations Division Standard

TEMPORARY LARGE ROADSIDE SIGNS

TLRS(1)-17

FILE: tlrs-17.dgn	DN:	CK:	DW:	CK:
© TxDOT May 2017	CONT	SECT	JOB	HIGHWAY
REVISIONS	0337	01	053	SH 29
	DIST	COUNTY		SHEET NO.
	AUS	WILLIAMSON		234

117A

DISCLAIMER:
The use of this standard is governed by the "Texas Engineering Practice Act". No warranty of any kind is made by TxDOT for any purpose whatsoever. TxDOT assumes no responsibility for the conversion of this standard to other formats or for incorrect results or damages resulting from its use.

DATE: 12/18/2025 2:51:52 PM
FILE: pw://kh-pw.bentley.com:kh-pw-01/Documents/01 Active Projects/TX-GEO-069284/095 Design/Parts Design/Parts Set 7/Suite/TLRS(2)-17.dgn

METHOD 3: WOOD SKID

STEPS:

Step 1. Determine sign height (Hs) and width (Ws). Note that the wood skid method is only intended for use on level terrain. The skid height from ground to bottom of sign is 7'6". If this causes the distance from edge of pavement to the bottom of the sign to be less than 7', the wood skid method is not to be used.

Step 2. Determine number of 4"x6" (nominal 3.5"x 5.5") posts from Figure 3 below. Determine spacing of posts (A) and distance from edge of sign to outside posts (0.5A) from 'Post Spacing and Sign Placement' detail.

Step 3. Determine number of 40 pound sandbags from Figure 4.

Step 4. Assemble skid as shown on TLRS(4) standard. Attach sign (plywood or extruded aluminum) using a method on TLRS(3). Wooden parts are not required to be painted.

FIGURE 3

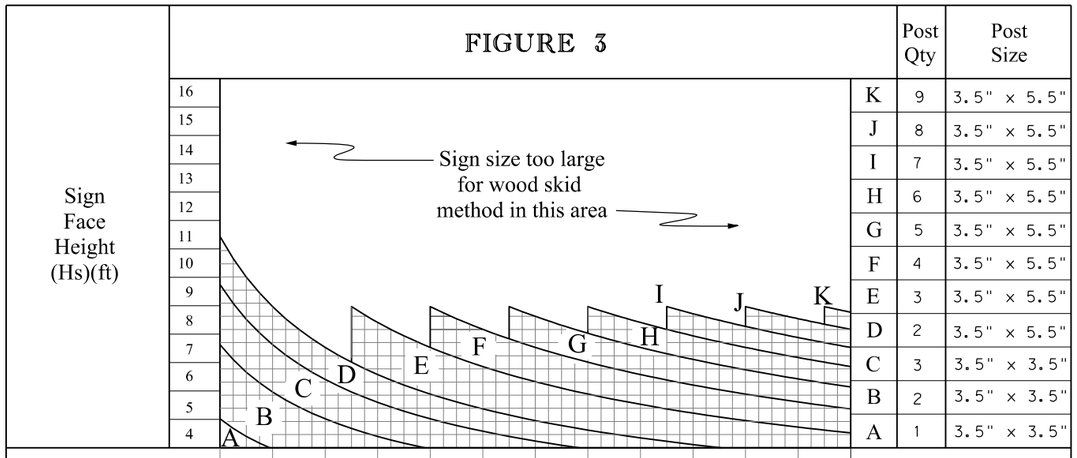

Post Qty	Post Size
K 9	3.5" x 5.5"
J 8	3.5" x 5.5"
I 7	3.5" x 5.5"
H 6	3.5" x 5.5"
G 5	3.5" x 5.5"
F 4	3.5" x 5.5"
E 3	3.5" x 5.5"
D 2	3.5" x 5.5"
C 3	3.5" x 3.5"
B 2	3.5" x 3.5"
A 1	3.5" x 3.5"

FIGURE 4

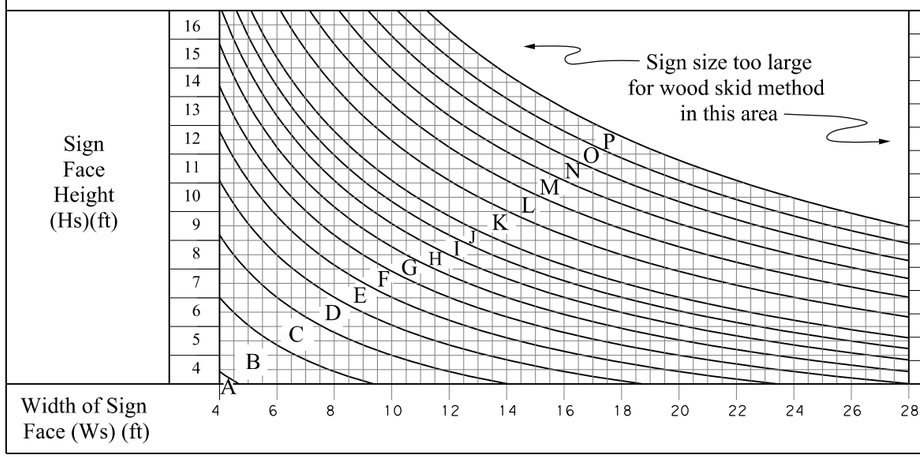

Bags
P 110
O 100
N 090
M 080
L 070
K 060
J 050
I 045
H 040
G 035
F 030
E 025
D 020
C 015
B 010
A 005

WIRE ROPE BREAKAWAY FEATURE

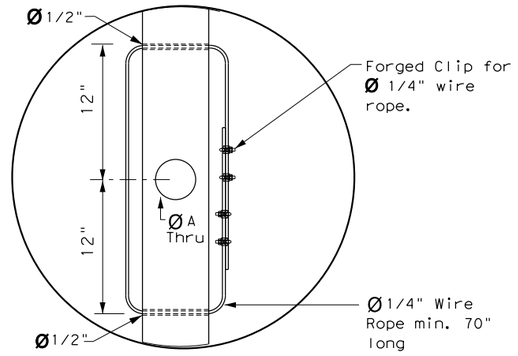

DETAIL B

NOTES:

1. Wire rope breakaway feature required on all wooden posts. This breakaway feature includes the clamped cable with 2 holes to mount the cable, 4 cable clips, and hole A which the cable surrounds.
2. Breakaway feature is designed so wooden post fractures at hole A, with post staying attached to sign structure via the clamped cable.

POST SPACING AND SIGN PLACEMENT

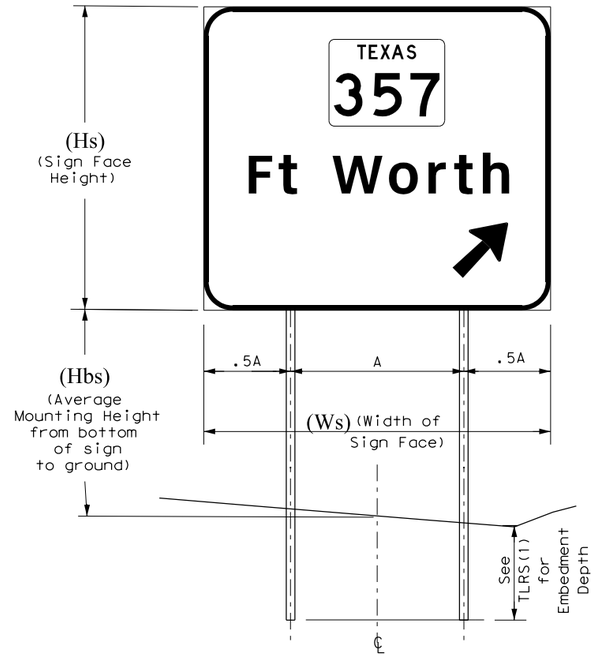

WOODEN POST SPACING NOTES:

1. Spacing between posts: A = Ws / # of posts required
2. Spacing between edge of sign and outside posts: 0.5A

STEEL POST SPACING NOTE:

See SMD(2-3)for post spacing unless reusing existing sign posts.

SIGN PLACEMENT NOTE:

See SMD(2-3)for sign placement details.

WOOD POST

TABLE 4

Support Size	ØA	ØB
4x6	1 1/2"	2"
6x8	3 5/8"	4"
6x10	3 5/8"	4"

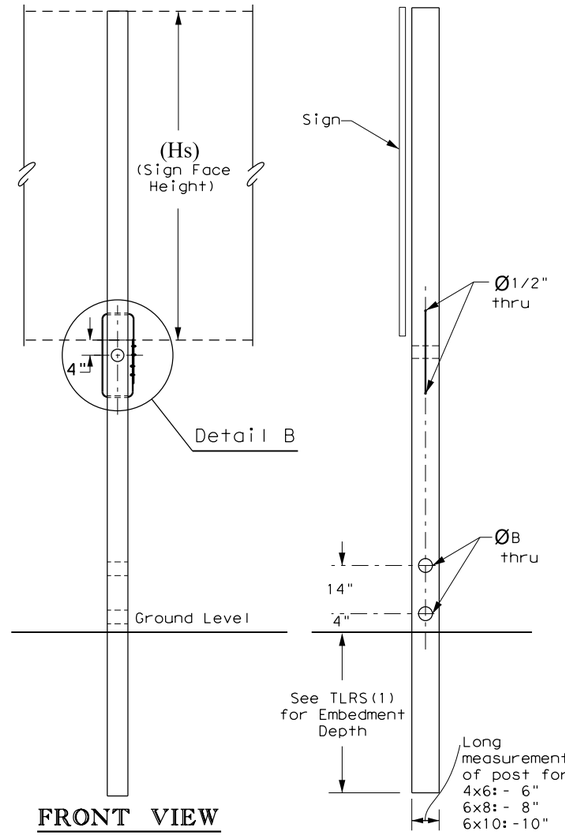

FRONT VIEW

SIDE VIEW

NOTE:

All holes shown here are required for breakaway features to function properly.

SHEET 2 OF 4

Texas Department of Transportation | Traffic Operations Division Standard

TEMPORARY LARGE ROADSIDE SIGNS

TLRS(2)-17

FILE: tlrs-17.dgn	DN:	CK:	DW:	CK:
© TxDOT May 2017	CONT	SECT	JOB	HIGHWAY
REVISIONS	0337	01	053	SH 29
	DIST	COUNTY		SHEET NO.
	AUS	WILLIAMSON		235

117B

DISCLAIMER:
The use of this standard is governed by the "Texas Engineering Practice Act". No warranty of any kind is made by TxDOT for any purpose whatsoever. TxDOT assumes no responsibility for the conversion of this standard to other formats or for incorrect results or damages resulting from its use.

DATE: 12/18/2025 2:51:52 PM
FILE: pw://kh-pw.bentley.com:kh-pw-01/Documents/01 Active Projects/TX-GEO-069240/05/standard/tlrs-17_mounting_details.dgn

ANGLE STIFFENER METHOD (WOOD POST)

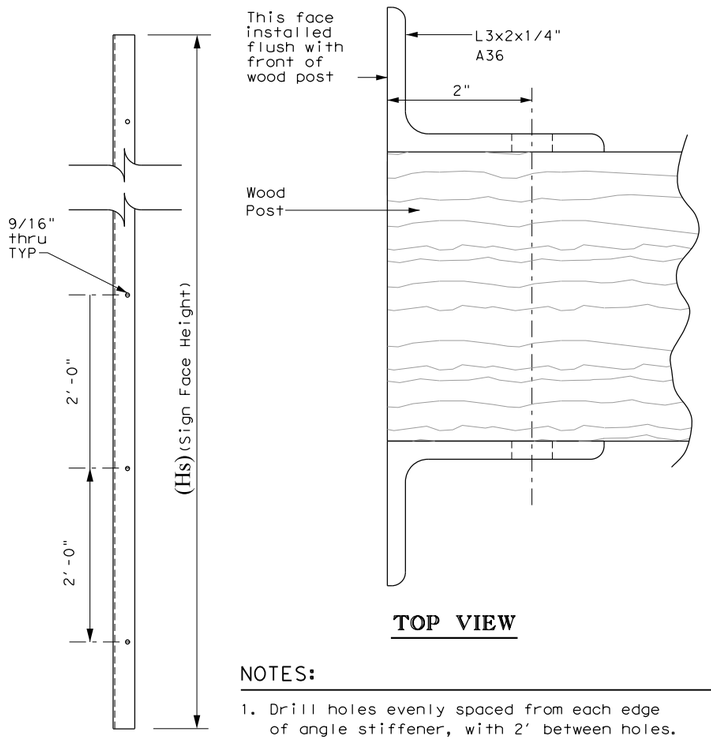

TOP VIEW

SIDE VIEW

NOTES:

1. Drill holes evenly spaced from each edge of angle stiffener, with 2' between holes.
2. Attach 2 angle stiffeners to each post using A307 1/2" dia. x 2" long lag screws for 4x6 post, or A307 1/2" dia. x 3" long lag screws for 6x8 or 6x10 post.

MOUNTING PLATE METHOD (WOOD POST)

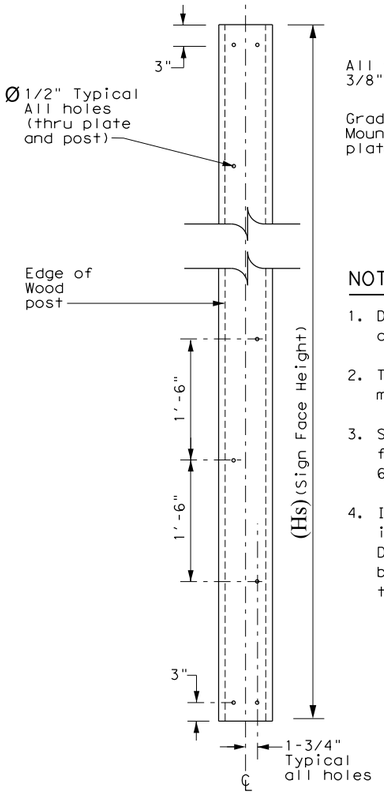

FRONT VIEW

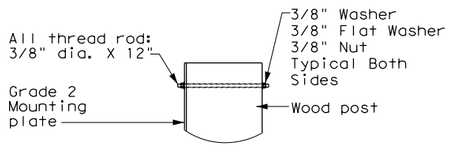

SIDE VIEW

NOTES:

1. Drill holes evenly spaced from each edge of mounting plate, with 1'6" between holes.
2. Two holes drilled 3" from each end of mounting plate.
3. Steel mounting plate 6" wide x 1/4" thick for 4x6 post, or 8" wide x 1/4" thick for 6x8 or 6x10 post.
4. Install mounting plate so plate overhang is the same on both sides of wood post. Drill 1/2" dia. holes thru wood post before attaching mounting plate using 3/8" threaded rod.

MOUNTING A PLYWOOD SIGN

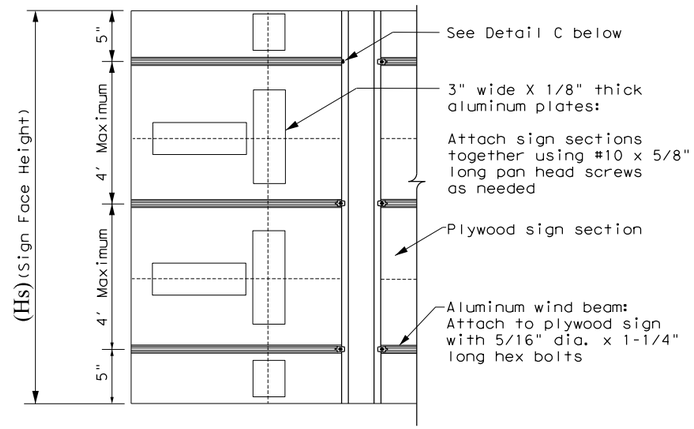

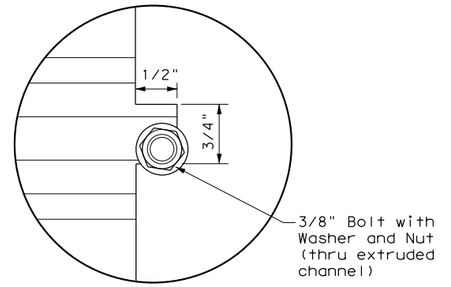

DETAIL C

NOTES:

1. Recommended sign thickness 5/8".
2. Attach an aluminum wind beam approx. 5" from the top and bottom of sign thru the width of the sign and then as needed so there is a maximum 4' spacing between beams.
3. Attach sign sections with aluminum plates as needed.
4. Attach sign to post using bolts with sign clips as shown in 'Mounting Plate and Angle Stiffener Attachment to Extruded Aluminum Sign' detail. On the top bolt, cut out a 1/2" wide x 3/4" tall notch and tighten the bolt in the notch with a nut and washer. A sign clip is not used here. See Detail C.
5. This option works for the angle stiffener or mounting plate methods. Clamp plate method not recommended with aluminum wind beams.
6. Alternatively, contractor may drill holes thru plywood sign and attach to post using angle stiffener, mounting plate, or clamp plate method. Vertical bolt spacing should not be greater than 12" with 3/8" bolts.

MOUNTING PLATE AND ANGLE STIFFENER ATTACHMENT TO EXTRUDED ALUMINUM SIGN

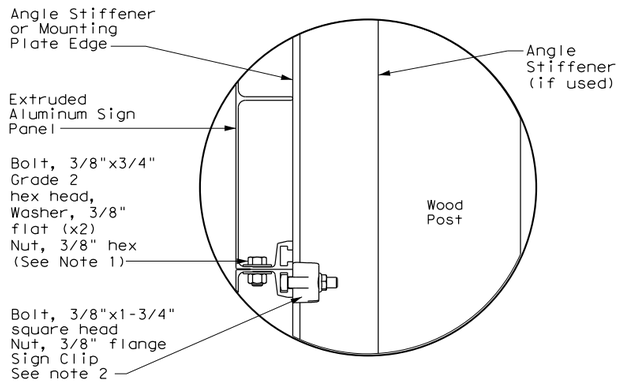

NOTES:

1. Space this hardware at 24" at each joint between panels.
2. Install this hardware on both sides of the wood post for proper attachment.

CLAMP PLATE METHOD (WOOD POST)

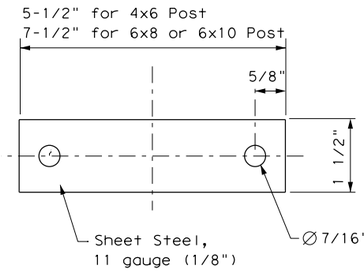

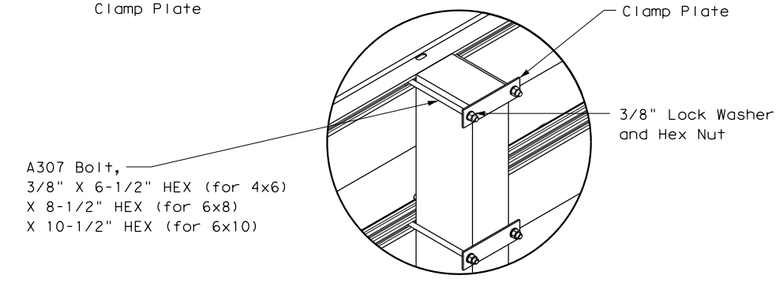

SHEET 3 OF 4

Texas Department of Transportation | Traffic Operations Division Standard

TEMPORARY LARGE ROADSIDE SIGNS: MOUNTING DETAILS

TLRS(3)-17

FILE: tlrs-17.dgn	DN:	CK:	DW:	CK:
©TxDOT May 2017	CONT	SECT	JOB	HIGHWAY
REVISIONS	0337	01	053	SH 29
	DIST	COUNTY		SHEET NO.
	AUS	WILLIAMSON		236

117C

DISCLAIMER:
The use of this standard is governed by the "Texas Engineering Practice Act". No warranty of any kind is made by TxDOT for any purpose whatsoever. TxDOT assumes no responsibility for the conversion of this standard to other formats or for incorrect results or damages resulting from its use.
© TxDOT May 2017 - Texas Department of Transportation - All rights reserved.

DATE: 12/18/2025 2:51:53 PM
FILE: pw://kh-pw.bentley.com:kh-pw-01/Documents/01 Active Projects/TX-GEO-0692840/05 Design/Final Design Set 7/Suite/tlrs-17.dgn

WOOD POST (4 x 6)

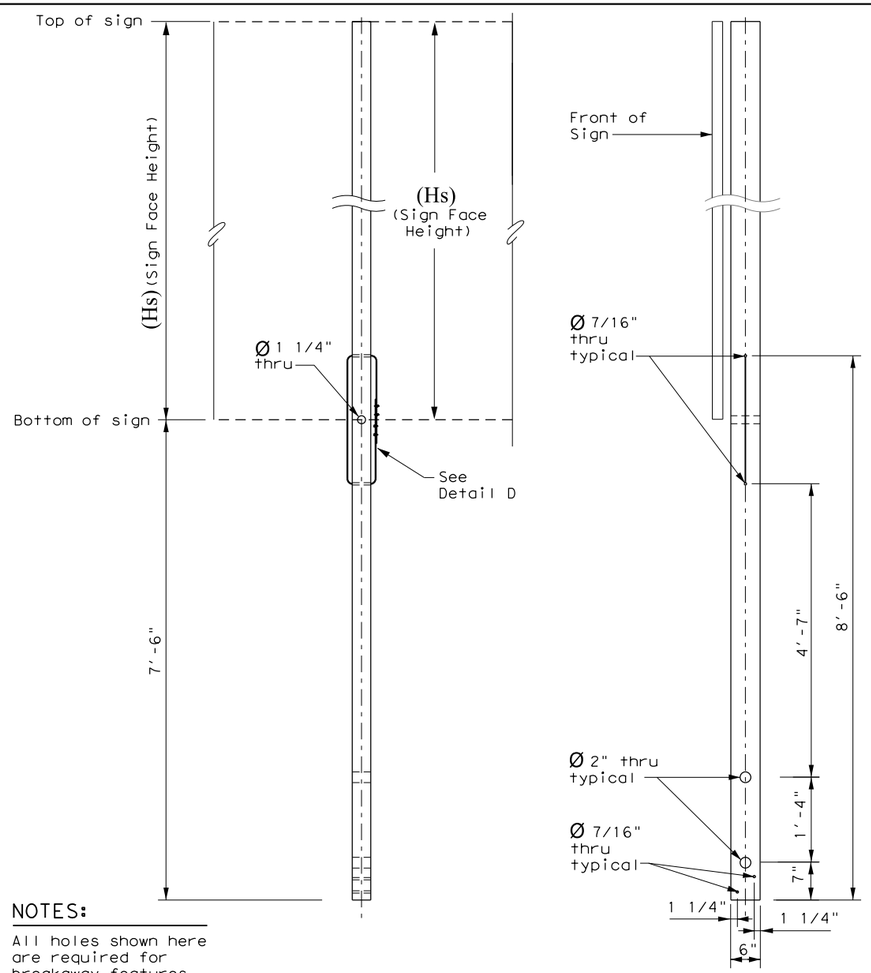

NOTES:

All holes shown here are required for breakaway features to function properly.

FRONT VIEW

SIDE VIEW

SKID (2 x 6)

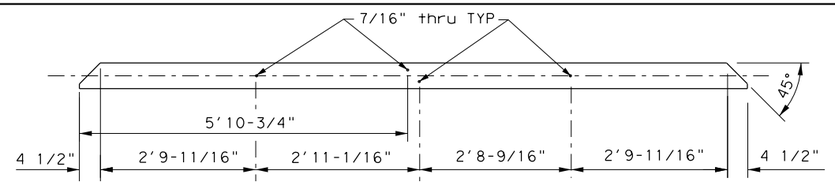

NOTES:

The 2 center holes are drilled 1-1/4" above and below skid centerline for attachment to post.

BRACE (2 x 4)

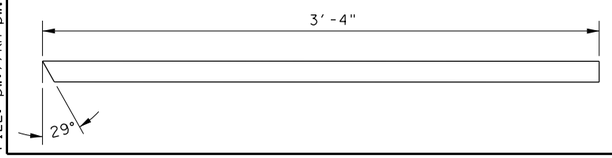

BRACE BLOCK (4 x 4)

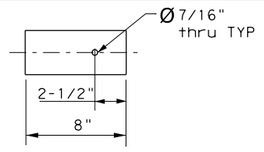

WIRE ROPE BREAKAWAY FEATURE

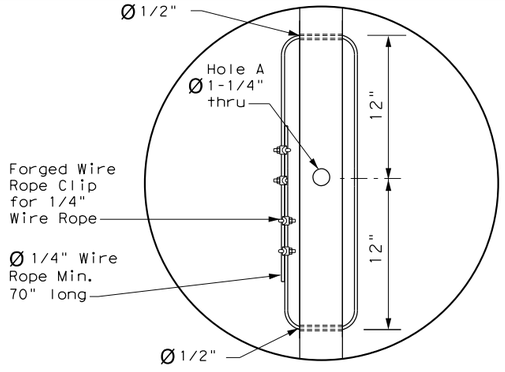

DETAIL D

NOTES:

1. Wire rope breakaway feature required on all wooden posts. This breakaway feature includes the clamped cable with 2 holes to mount the cable, 4 cable clips, and hole A which the cable surrounds.
2. Breakaway feature is designed so wood post fractures at hole A, with post staying attached to sign structure via the clamped cable.

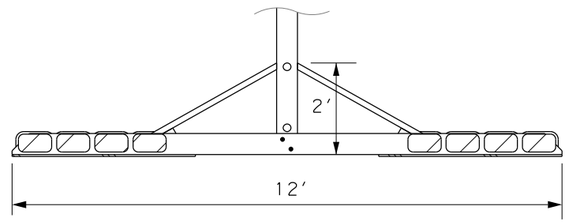

DETAIL E

WOOD SKID

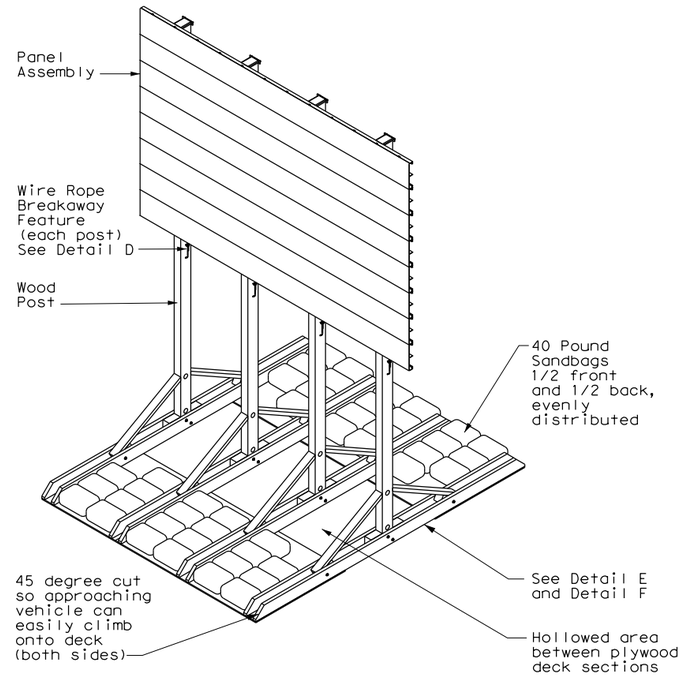

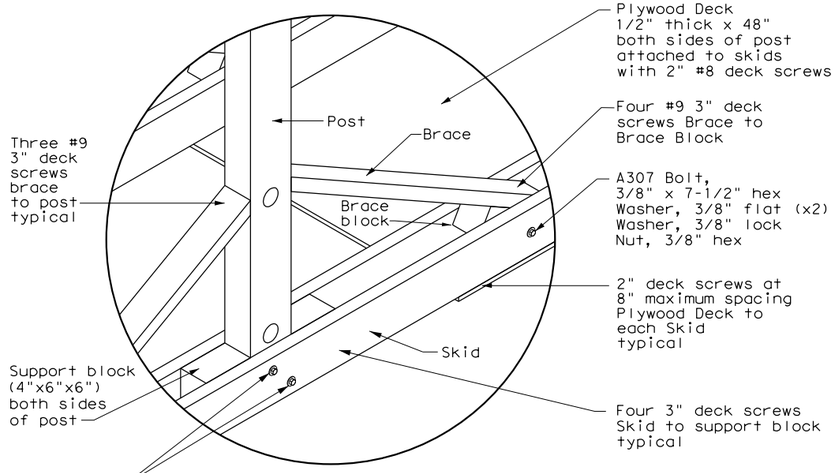

DETAIL F

NOTE:

Contractor shall have the option to use another method to support the sandbags, provided the material under the sandbags does not exceed 0.75" in height. Examples include use of marine grade plywood or composite decking. Contractor may drill holes in plywood as needed for drainage.

Texas Department of Transportation

Traffic Operations Division Standard

TEMPORARY LARGE ROADSIDE SIGNS: WOOD SKID

TLRS(4)-17

FILE: tlrs-17.dgn	DN:	CK:	DW:	CK:
© TxDOT May 2017	CONT	SECT	JOB	HIGHWAY
REVISIONS	0337	01	053	SH 29
	DIST	COUNTY		SHEET NO.
	AUS	WILLIAMSON		237

117D

DISCLAIMER:
The use of this standard is governed by the "Texas Engineering Practice Act". No warranty of any kind is made by TxDOT for any purpose whatsoever. TxDOT assumes no responsibility for the conversion of this standard to other formats or for incorrect results or damages resulting from its use.

DATE: 12/18/2025 2:52:12 PM
FILE: pw://kh-pw.bentley.com:kh-pw-01/Documents/01 Active Projects/TX-GEO-069284/605 acad 29 w Identifiers/Plan Set 7&8 w Ti COPY AND APPLY/ts-cd-22.dgn

OVERLAY PANEL SPACING DETAIL

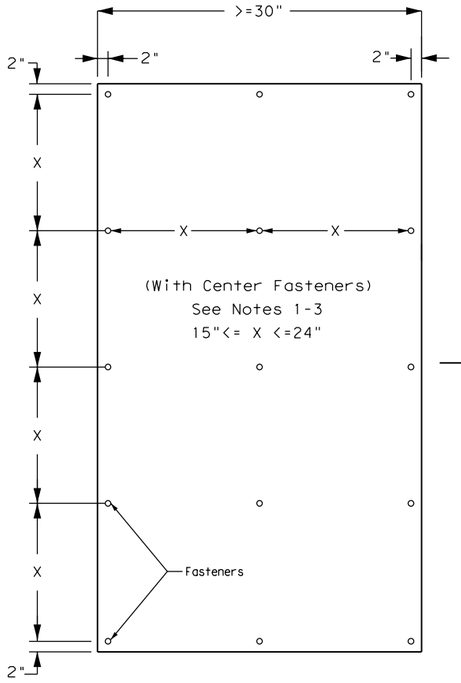

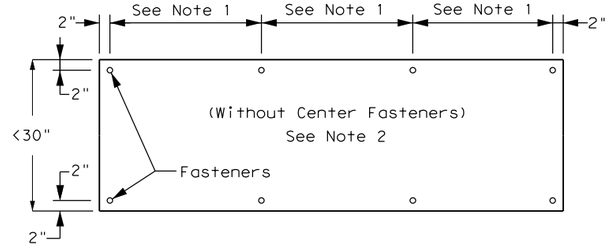

SPACING NOTES:

1. Edge fasteners should be placed 2" from edges of overlay panel, and be evenly spaced no less than 15" apart and no greater than 24" apart for the length of the panel.
2. For overlay panels measuring less than 30" on any side, only edge fasteners should be used.
3. Center fasteners should only be used for panels measuring 30" or greater on both sides. Center fasteners should be used evenly spaced and aligned with the edge fasteners along the longest side.
4. The CW26-1aT EXIT CLOSED sign panel and the CW26-1bT EXIT CLOSED sign panel may come with pre-drilled holes for installation. If no pre-drilled holes, refer to notes 1 and 2 above.

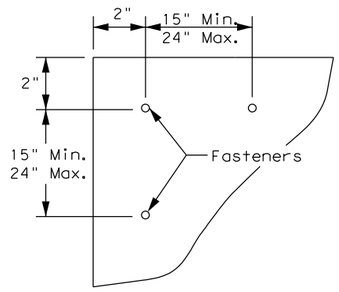

EDGE FASTENER SPACING DETAIL

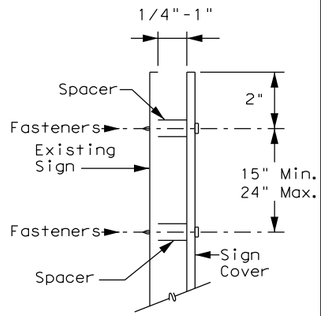

SIDE VIEW DETAIL

GENERAL NOTES:

1. Permanent large guide signs that are in conflict with work zone conditions should be removed or covered until the message matches the roadway condition.
2. Sign panel overlays should be made of a rigid material (sheet aluminum, corrugated plastic, or other material as approved by the Engineer). The installation should allow adequate air flow between the overlay panel and the existing sign panel by providing a minimum spacer of 1/4" (1" maximum).
3. Spacers should be a material (such as plastic or nylon fiber) that will not harm the sign sheeting face.
4. #12 x 1½" self-drilling screw (fasteners) should be aluminum, galvanized, blue coated, or stainless steel.
5. Sign panel overlays used to cover all or part of a sign should be the same color as the background color of the sign to be covered with the exception of Exit Closed Sign Panels. The sign panel overlays should cover the conflicting or non-applicable sign information. See the Exit Closed Sign Panel detail and notes for sign panel overlay installations for closed exits.
6. Large extruded sign covers in work zones should only be used for long-term stationary work.
7. All covering material, mounting hardware, and spacers should be removed when panel overlay is removed.

ASSEMBLY NOTES:

1. Apply fasteners to the sheet aluminum overlays in accordance with the hole spacing in the Overlay Panel Spacing Detail.
2. Tape should not be applied to the sign sheeting surface. Pre-mask or application tape should be removed prior to exposure to sunlight.
3. For full sign covering applications, position the overlay panel's bottom edge flush with the bottom of the existing extruded sign panel and then position the overlay panel's lower left edge flush with the lower left edge of the bottom existing extruded panel section. For only covering a specific sign message, position the overlay panel's bottom edge first and then position the overlay panel's lower left edge to completely cover the conflicting or non-applicable message.
4. If additional overlay panels are needed, abut the next overlay panel to the first attached overlay panel and perform the same work as specified in steps above.

EXIT CLOSED SIGN DETAILS

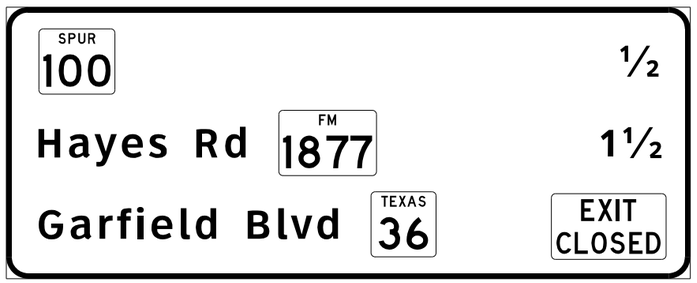

EXIT CLOSED SIGN PANEL
(See detail 1)

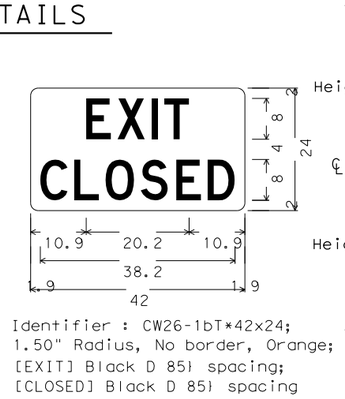

Identifier : CW26-1bT*42x24;
1.50" Radius, No border, Orange;
[EXIT] Black D 85} spacing;
[CLOSED] Black D 85} spacing

DETAIL 1

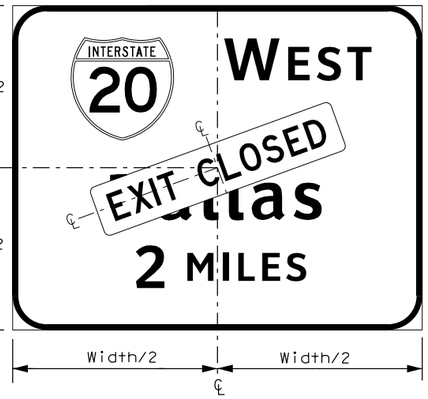

EXIT CLOSED SIGN PANEL
(See detail 2)

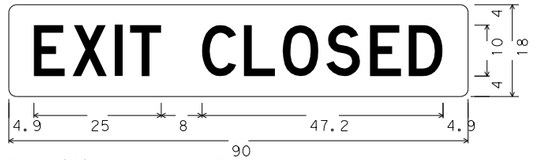

Identifier : CW26-1aT*90x18;
1.5" Radius, No border, Orange;
[EXIT] Black D, [CLOSED] Black D 80} spacing;

DETAIL 2

EXIT CLOSED SIGN PANEL NOTES:

1. When using an EXIT CLOSED (CW26-1bT) sign on an interchange sequence guide sign, place the EXIT CLOSED (CW26-1bT) sign panel horizontal in-line with the information for the closed exit and right-aligned with the distances shown for the other destinations.
2. When using an EXIT CLOSED (CW26-1aT) sign on interchange guide sign(s), place the EXIT CLOSED (CW26-1aT) sign panel diagonally across the interchange guide sign(s) as per TMUTCD 6F.28.
3. The EXIT CLOSED (CW26-1aT & CW26-1bT) signs should have a black legend on an orange background.

Texas Department of Transportation

Traffic Safety Division Standard

TEMPORARY LARGE SIGN COVERING DETAILS

TS-CD-22

FILE: ts-cd-22.dgn	DN: TXDOT	CK: TXDOT	DW: TXDOT	CK: TXDOT
© TxDOT October 2022	CONT	SECT	JOB	HIGHWAY
REVISIONS	0337	01	053	SH 29
12-19	DIST	COUNTY		SHEET NO.
10-22	AUS	WILLIAMSON		238

117E

DISCLAIMER:
The use of this standard is governed by the "Texas Engineering Practice Act". No warranty of any kind is made by TxDOT for any purpose whatsoever. TxDOT assumes no responsibility for the conversion of this standard to other formats or for incorrect results or damages resulting from its use.

DATE: 12/18/2025 2:52:48 PM
FILE: pw://kh-pw.bentley.com:kh-pw-01/Documents/01 Active Projects/TX-GEO-0692B4/05 Roadway Design/Project Set/Submittal/tsr3-13.dgn

REQUIREMENTS FOR INDEPENDENT MOUNTED ROUTE SIGNS

SHEETING REQUIREMENTS		
USAGE	COLOR	SIGN FACE MATERIAL
BACKGROUND	WHITE	TYPE A SHEETING
BACKGROUND	ALL OTHERS	TYPE B OR C SHEETING
LEGEND & BORDERS	WHITE	TYPE A SHEETING
LEGEND & BORDERS	BLACK	ACRYLIC NON-REFLECTIVE FILM
LEGEND & BORDERS	ALL OTHERS	TYPE B or C SHEETING

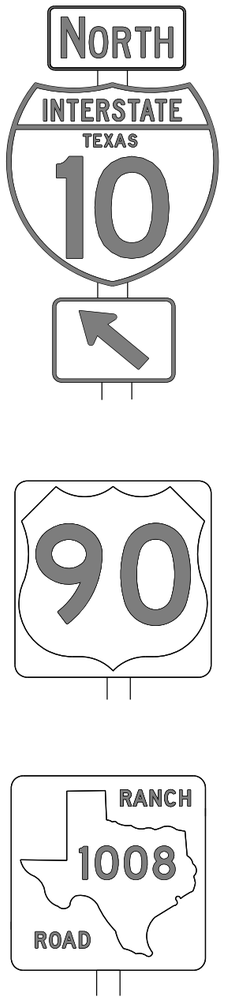

TYPICAL EXAMPLES

REQUIREMENTS FOR BLUE, BROWN & GREEN D AND I SERIES GUIDE SIGNS

SHEETING REQUIREMENTS		
USAGE	COLOR	SIGN FACE MATERIAL
BACKGROUND	ALL	TYPE B OR C SHEETING
LEGEND & BORDERS	WHITE	TYPE D SHEETING
LEGEND, SYMBOLS & BORDERS	ALL OTHERS	TYPE B OR C SHEETING

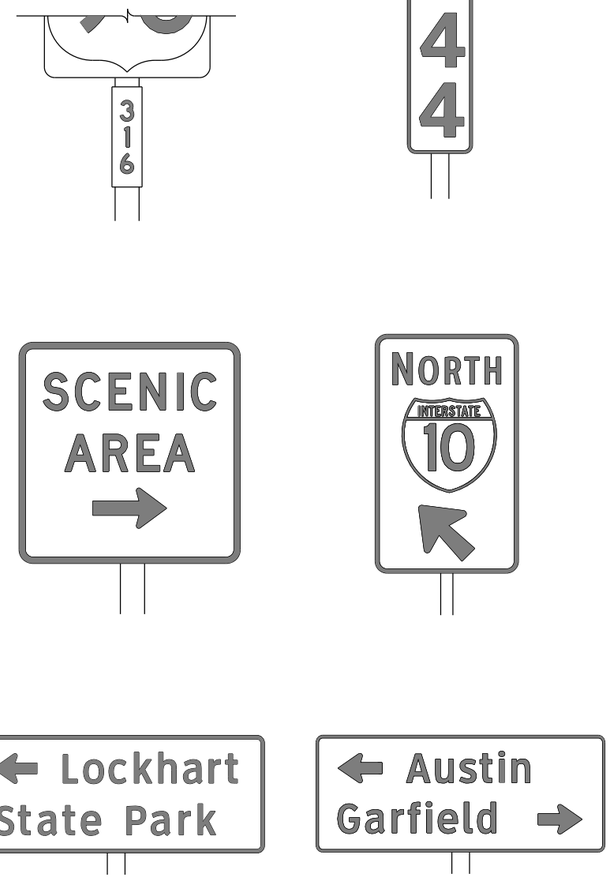

TYPICAL EXAMPLES

GENERAL NOTES

1. Signs to be furnished shall be as detailed elsewhere in the plans and/or as shown on sign tabulation sheet. Standard sign designs and arrow dimensions can be found in the "Standard Highway Sign Designs for Texas" (SHSD).

2. White legend shall use the Clearview Alphabet. The following Clearview fonts shall be used to replace the existing white Federal Highway Administration (FHWA) Standard Highway Alphabets, when not specified in the SHSD, or in the plans.

B	CV-1W
C	CV-2W
D	CV-3W
E	CV-4W
Emod	CV-5WR
F	CV-6W

3. Route sign legend (ie. IH, US, SH and FM shields) shall use the Federal Highway Administration (FHWA) Standard Highway Alphabets B, C, D, E, Emod or F).

4. Lateral spacing between letters and numerals shall conform with the SHSD, and any approved changes thereto. Lateral spacing of legend shall provide a balanced appearance when spacing is not shown.

5. Independent mounted route sign with white or colored legend and borders shall be applied by screening process with transparent color ink, transparent colored overlay film to white background sheeting or cut-out white sheeting to colored background sheeting, or combination thereof. White legend, symbols and borders on all other signs shall be cut-out white sheeting applied to colored background sheeting.

6. Information regarding borders and radii for signs is found in the "Standard Highway Sign Designs for Texas". Dimensions shown and described for borders and corner radii on parent sign are nominal. Borders may vary in width as much as 1/2 inch. Corner radii above 3 inches may vary in width as much as 1 inch. Borders and corner radii within a parent sign must be of matching widths. The sign area outside the corner radius should be trimmed or rounded.

7. Sign substrate shall be any material that meets the Departmental Material Specification requirements of DMS-7110 or approved alternative.

8. Mounting details of roadside signs are shown in the "SMD series" Standard Plan Sheets.

DEPARTMENTAL MATERIAL SPECIFICATIONS	
ALUMINUM SIGN BLANKS	DMS-7110
SIGN FACE MATERIALS	DMS-8300

ALUMINUM SIGN BLANKS THICKNESS	
Square Feet	Minimum Thickness
Less than 7.5	0.080
7.5 to 15	0.100
Greater than 15	0.125

The Standard Highway Sign Designs for Texas (SHSD) can be found at the following website.

http://www.txdot.gov/

Texas Department of Transportation

Traffic Operations Division Standard

TYPICAL SIGN REQUIREMENTS

TSR(3)-13

FILE:	tsr3-13.dgn	DN: TxDOT	CK: TxDOT	DW: TxDOT	CK: TxDOT
©TxDOT	October 2003	CONT	SECT	JOB	HIGHWAY
REVISIONS		0337	01	053	SH 29
12-03 7-13		DIST	COUNTY		SHEET NO.
9-08		AUS	WILLIAMSON		239

DISCLAIMER:
The use of this standard is governed by the "Texas Engineering Practice Act". No warranty of any kind is made by TxDOT for any purpose whatsoever. TxDOT assumes no responsibility for the conversion of this standard to other formats or for incorrect results from its use.

DATE: 12/18/2025 5:14:31 PM
FILE: pw://kh-pw.bentley.com:kh-pw-01/Documents/01 Active Projects/TX-GEO-0692B40/05 Design/Part 7/Suite/tsr4-13.dgn

REQUIREMENTS FOR RED BACKGROUND REGULATORY SIGNS

(STOP, YIELD, DO NOT ENTER AND WRONG WAY SIGNS)

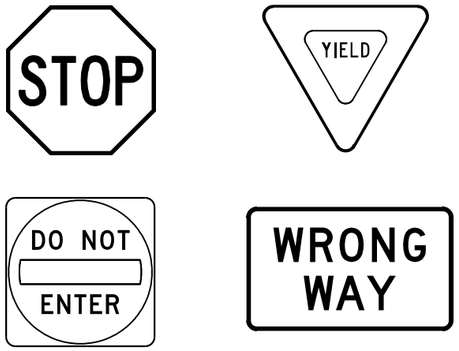

REQUIREMENTS FOR FOUR SPECIFIC SIGNS ONLY

SHEETING REQUIREMENTS		
USAGE	COLOR	SIGN FACE MATERIAL
BACKGROUND	RED	TYPE B OR C SHEETING
BACKGROUND	WHITE	TYPE B OR C SHEETING
LEGEND & BORDERS	WHITE	TYPE B OR C SHEETING
LEGEND	RED	TYPE B OR C SHEETING

REQUIREMENTS FOR WHITE BACKGROUND REGULATORY SIGNS

(EXCLUDING STOP, YIELD, DO NOT ENTER AND WRONG WAY SIGNS)



TYPICAL EXAMPLES

SHEETING REQUIREMENTS		
USAGE	COLOR	SIGN FACE MATERIAL
BACKGROUND	WHITE	TYPE A SHEETING
BACKGROUND	ALL OTHERS	TYPE B OR C SHEETING
LEGEND, BORDERS AND SYMBOLS	BLACK	ACRYLIC NON-REFLECTIVE FILM
LEGEND, BORDERS AND SYMBOLS	ALL OTHER	TYPE B OR C SHEETING

REQUIREMENTS FOR WARNING SIGNS

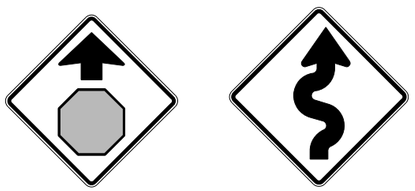

TYPICAL EXAMPLES

SHEETING REQUIREMENTS		
USAGE	COLOR	SIGN FACE MATERIAL
BACKGROUND	FLOURESCENT YELLOW	TYPE B_{FL} OR C_{FL} SHEETING
LEGEND & BORDERS	BLACK	ACRYLIC NON-REFLECTIVE FILM
LEGEND & SYMBOLS	ALL OTHER	TYPE B OR C SHEETING

REQUIREMENTS FOR SCHOOL SIGNS



TYPICAL EXAMPLES

SHEETING REQUIREMENTS		
USAGE	COLOR	SIGN FACE MATERIAL
BACKGROUND	WHITE	TYPE A SHEETING
BACKGROUND	FLOURESCENT YELLOW GREEN	TYPE B_{FL} OR C_{FL} SHEETING
LEGEND, BORDERS AND SYMBOLS	BLACK	ACRYLIC NON-REFLECTIVE FILM
SYMBOLS	RED	TYPE B OR C SHEETING

GENERAL NOTES

1. Signs to be furnished shall be as detailed elsewhere in the plans and/or as shown on sign tabulation sheet. Standard sign designs and arrow dimensions can be found in the "Standard Highway Sign Designs for Texas" (SHSD).
2. Sign legend shall use the Federal Highway Administration (FHWA) Standard Highway Alphabets (B, C, D, E, Emod or F).
3. Lateral spacing between letters and numerals shall conform with the SHSD, and any approved changes thereto. Lateral spacing of legend shall provide a balanced appearance when spacing is not shown.
4. Black legend and borders shall be applied by screening process or cut-out acrylic non-reflective black film to background sheeting, or combination thereof.
5. White legend and borders shall be applied by screening process with transparent colored ink, transparent colored overlay film to white background sheeting or cut-out white sheeting to colored background sheeting, or combination thereof.
6. Colored legend shall be applied by screening process with transparent colored ink, transparent colored overlay film or colored sheeting to background sheeting, or combination thereof.
7. Sign substrate shall be any material that meets the Departmental Material Specification requirements of DMS-7110 or approved alternative.
8. Mounting details for roadside mounted signs are shown in the "SMD series" Standard Plan Sheets.

ALUMINUM SIGN BLANKS THICKNESS	
Square Feet	Minimum Thickness
Less than 7.5	0.080
7.5 to 15	0.100
Greater than 15	0.125

DEPARTMENTAL MATERIAL SPECIFICATIONS	
ALUMINUM SIGN BLANKS	DMS-7110
SIGN FACE MATERIALS	DMS-8300

The Standard Highway Sign Designs for Texas (SHSD) can be found at the following website.

http://www.txdot.gov/

Texas Department of Transportation

Traffic Operations Division Standard

TYPICAL SIGN REQUIREMENTS

TSR(4)-13

FILE: tsr4-13.dgn	DN: TxDOT	CK: TxDOT	DW: TxDOT	CK: TxDOT
© TxDOT October 2003	CONT	SECT	JOB	HIGHWAY
REVISIONS	0337	01	053	SH 29
12-03 7-13	DIST	COUNTY		SHEET NO.
9-08	AUS	WILLIAMSON		240

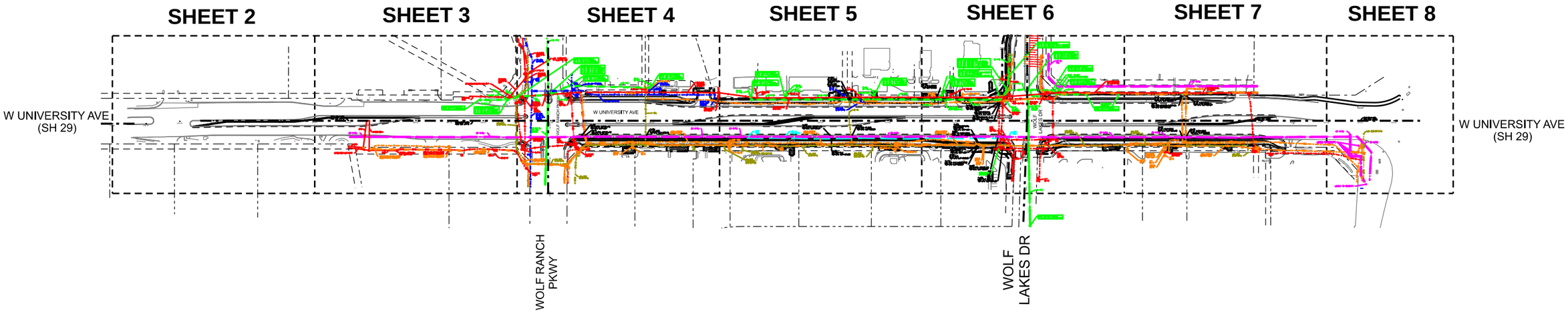

NOT TO SCALE

SPECIAL NOTES

1. ALL PIPE SIZES WERE TAKEN FROM UTILITY RECORDS WHERE POSSIBLE. THE UTILITIES DEPICTED WERE INVESTIGATED BY THE RIOS GROUP,INC.. ALL OTHER PLAN INFORMATION, NOTABLY THE BACKGROUND INFORMATION, WAS PROVIDED BY OTHERS AND THE RIOS GROUP, INC. DISCLAIMS RESPONSIBILITY FOR ITS ACCURACY.

2. EXISTING SUBSURFACE UTILITY INVESTIGATIONS WERE COMPLETED ON 07/28/2023. THE RIOS GROUP, INC. EXPRESSLY DISCLAIMS ANY AND ALL RESPONSIBILITY FOR NEW UTILITY INSTALLATIONS, MODIFICATIONS, AND/OR ADJUSTMENTS TO EXISTING UTILITIES AFTER THE COMPLETION DATE.

3. UTILITY LOCATIONS ON THESE DRAWINGS ARE INTENDED FOR DESIGN PURPOSES AND NOT CONSTRUCTION. THEY REFLECT SUBSURFACE UTILITIES AT THE TIME OF FIELD INVESTIGATION. CALL TEXAS ONE CALL SYSTEM (800)245-4545 FOR UTILITY LOCATIONS 48 HOURS PRIOR TO ANY WORK.

4. WHERE POSSIBLE, WATER, GAS, AND COMMUNICATION SERVICE LINES WERE DESIGNATED. HOWEVER, SOME SERVICE LINES ARE CONSTRUCTED OF NON-CONDUCTIVE MATERIAL AND UTILITY COMPANY DRAWINGS MAY NOT SHOW SERVICE LINE LOCATIONS. THEREFORE ALL SERVICE LINES MAY NOT BE SHOWN.

5. ALL UTILITY INFORMATION SHOWN HERON IS DEPICTED TO QUALITY LEVEL "D".

QUALITY LEVELS

QUALITY LEVEL "D" - INFORMATION DERIVED FROM EXISTING RECORDS AND/OR ORAL COLLECTION.

QUALITY LEVEL "C" - INFORMATION OBTAINED BY SURVEYING AND PLOTTING VISIBLE ABOVE GROUND UTILITY FEATURES AND BY USING PROFESSIONAL JUDGMENT IN CORRELATING INFORMATION TO QUALITY LEVEL "D" INFORMATION.

QUALITY LEVEL "B" - DESIGNATE: TWO-DIMENSIONAL HORIZONTAL MAPPING. THIS INFORMATION IS OBTAINED THROUGH THE APPLICATION AND INTERPRETATION OF APPROPRIATE NON-DESTRUCTIVE SURFACE GEOPHYSICAL METHODS. UTILITY INDICATIONS ARE REFERENCED TO ESTABLISHED SURVEY CONTROL. INCORPORATES QUALITY LEVELS "C" AND "D" INFORMATION TO PRODUCE QUALITY LEVEL "B" INFORMATION.

QUALITY LEVEL "A" - LOCATE: PRECISE HORIZONTAL AND VERTICAL LOCATION OF UTILITIES OBTAINED BY THE ACTUAL EXPOSURE AND SUBSEQUENT MEASUREMENT OF SUBSURFACE UTILITIES AT A SPECIFIC POINT. DIAMETERS SHOWN ARE VERIFIED VISUALLY AND MAY NOT BE EXACT.

MATERIAL ABBREVIATIONS

STL - STEEL
PE - POLYETHYLENE
AC - TRANSITE
CI - CAST IRON
DI - DUCTILE IRON
PVC - POLYVINYL CHLORIDE
DBC - DIRECT BURIED CABLE
RCP - REINFORCED CONCRETE PIPE
VC - VITRIFIED CLAY
FG - FIBERGLASS
CSC - CONCRETE/STEEL CYLINDER
CMP - CORRUGATED METAL PIPE
CONC - CONCRETE
CLAY - CLAY
UNK - UNKNOWN

The Rios Group, Inc.
TBPE Firm # F-14595

STATE OF TEXAS
TRAVIS S. ISAACSON
100094
LICENSED
PROFESSIONAL ENGINEER

10-10-2025

Subsurface Utility Engineering (SUE) Certification

The engineer's seal hereon is to certify that the utilities shown have been investigated in accordance with standard SUE industry practices. Where indicated utility sizes and materials taken from best available records. All other information hereon has been provided by others and is not a part of this certification.

REV	DATE	BY	DESCRIPTION

Kimley»Horn

THE RIOS GROUP
SUBSURFACE UTILITY ENGINEERING
UTILITY COORDINATION
575 ROUND ROCK WEST DRIVE
BUILDING 4, SUITE 402
ROUND ROCK, TX 78681

Texas Department of Transportation

SH 29 AUSTIN DISTRICT
GEORGETOWN, TEXAS

INDEX LAYOUT

SHEET 1 OF 8

CONT	SECT	JOB	HIGHWAY
0337	01	053	SH 29
DIST	COUNTY		SHEET NO.
AUS	WILLIAMSON		241

DATE: $DATE$ $TIME$
FILE: $FILE$

OUTSIDE OF SUE LIMITS
NO SUE INVESTIGATION COMPLETED

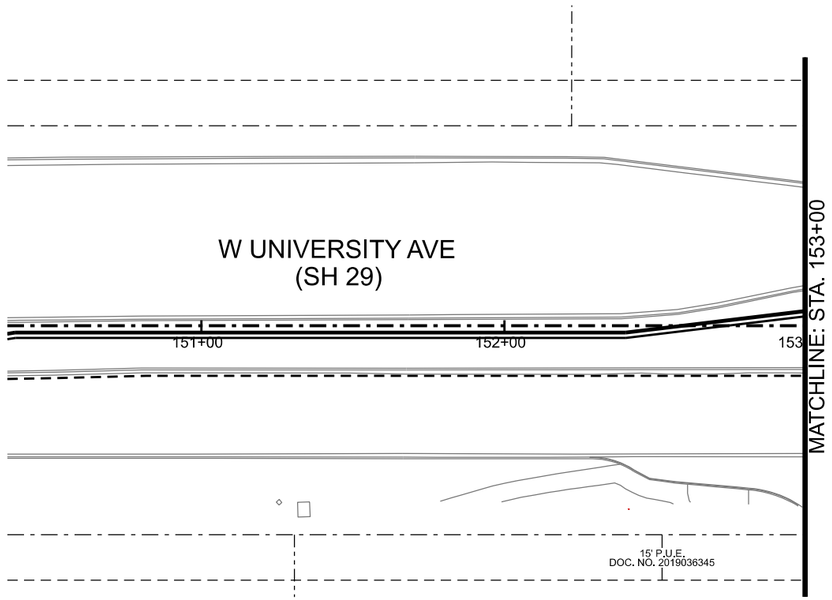

N

0 25 50

GRAPHIC SCALE IN FEET
SCALE: 1" = 50'

LEGEND OF UTILITY TYPES

QUALITY LEVELS
- QUALITY LEVEL "B"
- QUALITY LEVEL "C"
- QUALITY LEVEL "D"
- ABANDONED UTILITY
- PROPOSED UTILITY
- UNKNOWN UTILITY

COMMUNICATIONS QL "B"
- FRONTIER (TELE) — T1
- AT&T (FO/DUCT) — FOC1
- FIBERLIGHT (FO/DUCT) — FOC2
- FRONTIER (FO/DUCT) — FOC3
- MCI (FO/DUCT) — FOC4
- OPTIMUM (FO/DUCT) — FOC5
- GUS (FO/DUCT) — FOC6
- OPTIMUM (CABLE) — CTV1

ELECTRIC / POWER QL "B"
- GEORGETOWN UTILITY SYSTEMS — E1
- PEDERNALES ELECTRIC COOPERATIVE — E2
- PRIVATE — E3

GAS / PETROLEUM QL "B"
- ATMOS — G1

SANITARY SEWER QL "B"
- CITY OF GEORGETOWN — WW1

WATER QL "B"
- CITY OF GEORGETOWN — W1
- CITY OF ROUND ROCK (RAW WATER) — W2

TRAFFIC SIGNALS QL "B"
- TXDOT — TS1

OVERHEAD UTILITY QL "C"/"D"
- OH1 - GUS - ELECTRIC
- OH2 - GUS - FIBER
- OH3 - OPTIMUM - CTV/FIBER
- OH4 - AT&T - FIBER
- OH5 - FIBERLIGHT - FIBER
- OH6 - MCI - FIBER
- OH7 - FRONTIER - TELE
- OH8 - FRONTIER - FIBER
- OH9 - PEC - ELECTRIC

— OH —

LEGEND OF UTILITY SYMBOLS

- END CAP
- QUALITY LEVEL CHANGE
- TEST HOLE
- UTILITY CONTINUATION
- CATV CABINET
- CATV HANDHOLE
- FIBER HANDHOLE
- FIBER PEDESTAL
- TELEPHONE HANDHOLE (VAULT)
- TELEPHONE MANHOLE
- TELEPHONE PEDESTAL
- TELEPHONE POLE
- TELEPHONE POLE W/RISER
- ELECTRIC HANDHOLE
- ELECTRIC JUNCTION BOX (CABINET)
- ELECTRIC MANHOLE
- ELECTRIC POLE (POWER)
- ELECTRIC POLE W/RISER
- LIGHT POLE
- SIGNAL POLE
- SIGNAL HANDHOLE/BOX
- TRANSMISSION POLE
- GAS METER
- GAS TEST STATION
- GAS VALVE
- GAS VENT PIPE (GAS RISER)
- WASTE WATER CLEANOUT
- WASTE WATER MANHOLE
- FIRE HYDRANT
- WATER MANHOLE
- WATER METER
- WATER VALVE
- WATER VAULT

Kimley»Horn

The Rios Group, Inc.
TBPE Firm # F-14595

THE RIOS GROUP
SUBSURFACE UTILITY ENGINEERING
UTILITY COORDINATION
575 ROUND ROCK WEST DRIVE
BUILDING K, SUITE 400
ROUND ROCK, TX 78681

STATE OF TEXAS
TRAVIS S. ISAACSON
100094
LICENSED
PROFESSIONAL ENGINEER

10-10-2025

Texas Department of Transportation

SH 29 AUSTIN DISTRICT
GEORGETOWN, TEXAS

S.U.E. PLAN SHEET

BEGINNING TO STA. 153+00

SHEET 2 OF 8

CONT	SECT	JOB	HIGHWAY
0337	01	053	SH 29
DIST	COUNTY		SHEET NO.
AUS	WILLIAMSON		242

REV	DATE	BY	DESCRIPTION

Subsurface Utility Engineering (SUE) Certification

The engineer's seal hereon is to certify that the utilities shown have been investigated in accordance with standard SUE industry practices. Where indicated utility sizes and materials taken from best available records. All other information hereon has been provided by others and is not a part of this certification.

DATE: $DATE$
FILE: $FILE$
$TIME$

DW2
DW1
DW2
DW2

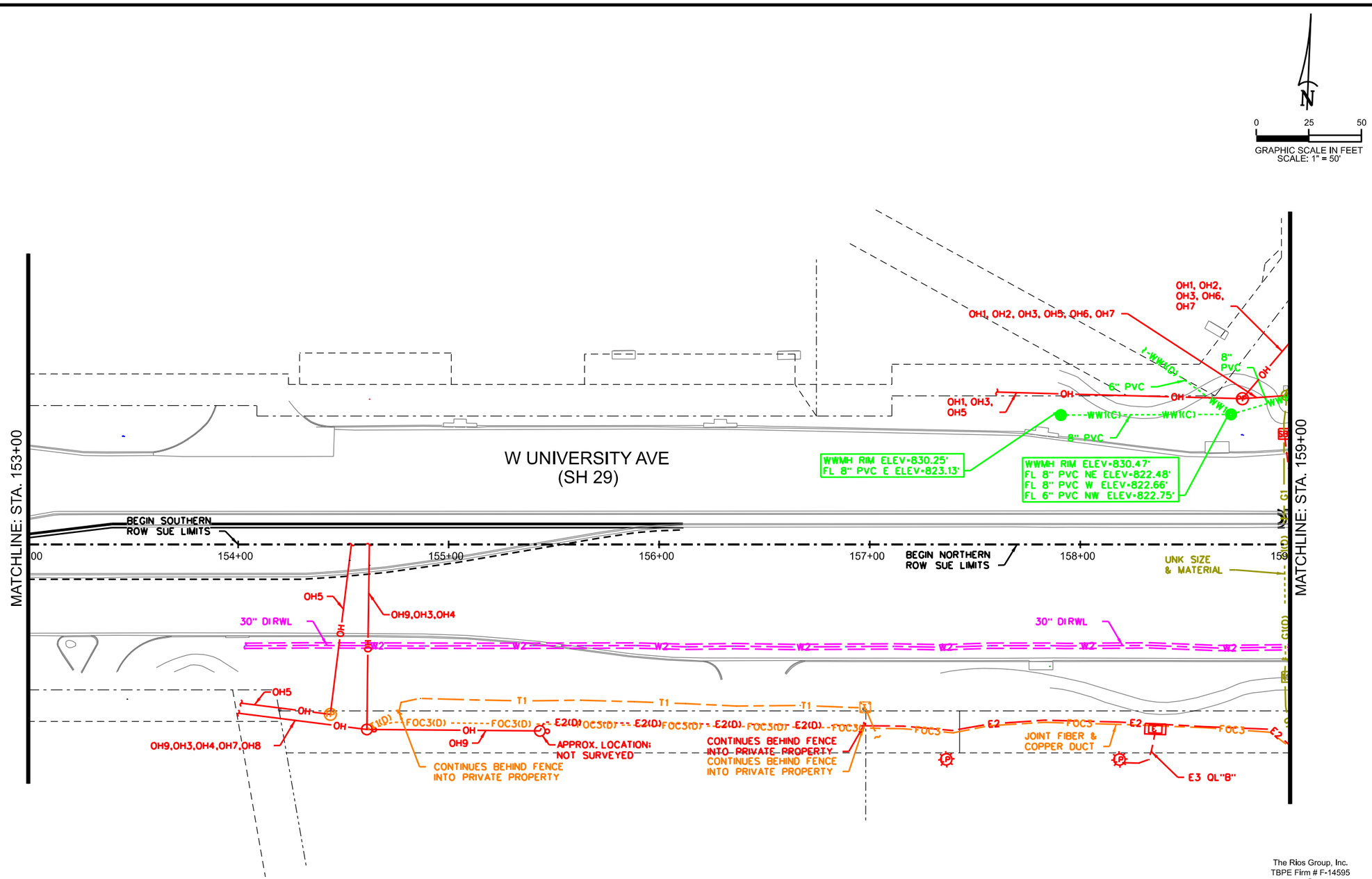

LEGEND OF UTILITY TYPES

QUALITY LEVELS
- QUALITY LEVEL "B"
- QUALITY LEVEL "C"
- QUALITY LEVEL "D"
- ABANDONED UTILITY
- PROPOSED UTILITY
- UNKNOWN UTILITY

COMMUNICATIONS QL "B"
- FRONTIER (TELE) — T1
- AT&T (FO/DUCT) — FOC1
- FIBERLIGHT (FO/DUCT) — FOC2
- FRONTIER (FO/DUCT) — FOC3
- MCI (FO/DUCT) — FOC4
- OPTIMUM (FO/DUCT) — FOC5
- GUS (FO/DUCT) — FOC6
- OPTIMUM (CABLE) — CTV1

ELECTRIC / POWER QL "B"
- GEORGETOWN UTILITY SYSTEMS — E1
- PEDERNALES ELECTRIC COOPERATIVE — E2
- PRIVATE — E3

GAS / PETROLEUM QL "B"
- ATMOS — G1

SANITARY SEWER QL "B"
- CITY OF GEORGETOWN — WW1

WATER QL "B"
- CITY OF GEORGETOWN — W1
- CITY OF ROUND ROCK (RAW WATER) — W2

TRAFFIC SIGNALS QL "B"
- TXDOT — TS1

OVERHEAD UTILITY QL "C"/"D" — OH
- OH1 - GUS - ELECTRIC
- OH2 - GUS - FIBER
- OH3 - OPTIMUM - CTV/FIBER
- OH4 - AT&T - FIBER
- OH5 - FIBERLIGHT - FIBER
- OH6 - MCI - FIBER
- OH7 - FRONTIER - TELE
- OH8 - FRONTIER - FIBER
- OH9 - PEC - ELECTRIC

LEGEND OF UTILITY SYMBOLS

- END CAP
- QUALITY LEVEL CHANGE
- TEST HOLE
- UTILITY CONTINUATION
- CATV CABINET
- CATV HANDHOLE
- FIBER HANDHOLE
- FIBER PEDESTAL
- TELEPHONE HANDHOLE (VAULT)
- TELEPHONE MANHOLE
- TELEPHONE PEDESTAL
- TELEPHONE POLE
- TELEPHONE POLE W/RISER
- ELECTRIC HANDHOLE
- ELECTRIC JUNCTION BOX (CABINET)
- ELECTRIC MANHOLE
- ELECTRIC POLE (POWER)
- ELECTRIC POLE W/RISER
- LIGHT POLE
- SIGNAL POLE
- SIGNAL HANDHOLE/BOX
- TRANSMISSION POLE
- GAS METER
- GAS TEST STATION
- GAS VALVE
- GAS VENT PIPE (GAS RISER)
- WASTE WATER CLEANOUT
- WASTE WATER MANHOLE
- FIRE HYDRANT
- WATER MANHOLE
- WATER METER
- WATER VALVE
- WATER VAULT

Kimley»Horn

THE RIOS GROUP
SUBSURFACE UTILITY ENGINEERING
UTILITY COORDINATION
575 ROUND ROCK WEST DRIVE
BUILDING 6, SUITE 400
ROUND ROCK, TX 78681

The Rios Group, Inc.
TBPE Firm # F-14595

STATE OF TEXAS
TRAVIS S. ISAACSON
100094
LICENSED
PROFESSIONAL ENGINEER
10-10-2025

Texas Department of Transportation

SH 29 AUSTIN DISTRICT GEORGETOWN, TEXAS

S.U.E. PLAN SHEET

STA. 153+00 TO STA. 159+00

SHEET 3 OF 8

CONT	SECT	JOB	HIGHWAY
0337	01	053	SH 29
DIST	COUNTY		SHEET NO.
AUS	WILLIAMSON		243

REV	DATE	BY	DESCRIPTION

Subsurface Utility Engineering (SUE) Certification

The engineer's seal hereon is to certify that the utilities shown have been investigated in accordance with standard SUE industry practices. Where indicated utility sizes and materials taken from best available records. All other information hereon has been provided by others and is not a part of this certification.

DATE: $DATE$
FILE: $FILE$
$TIME$

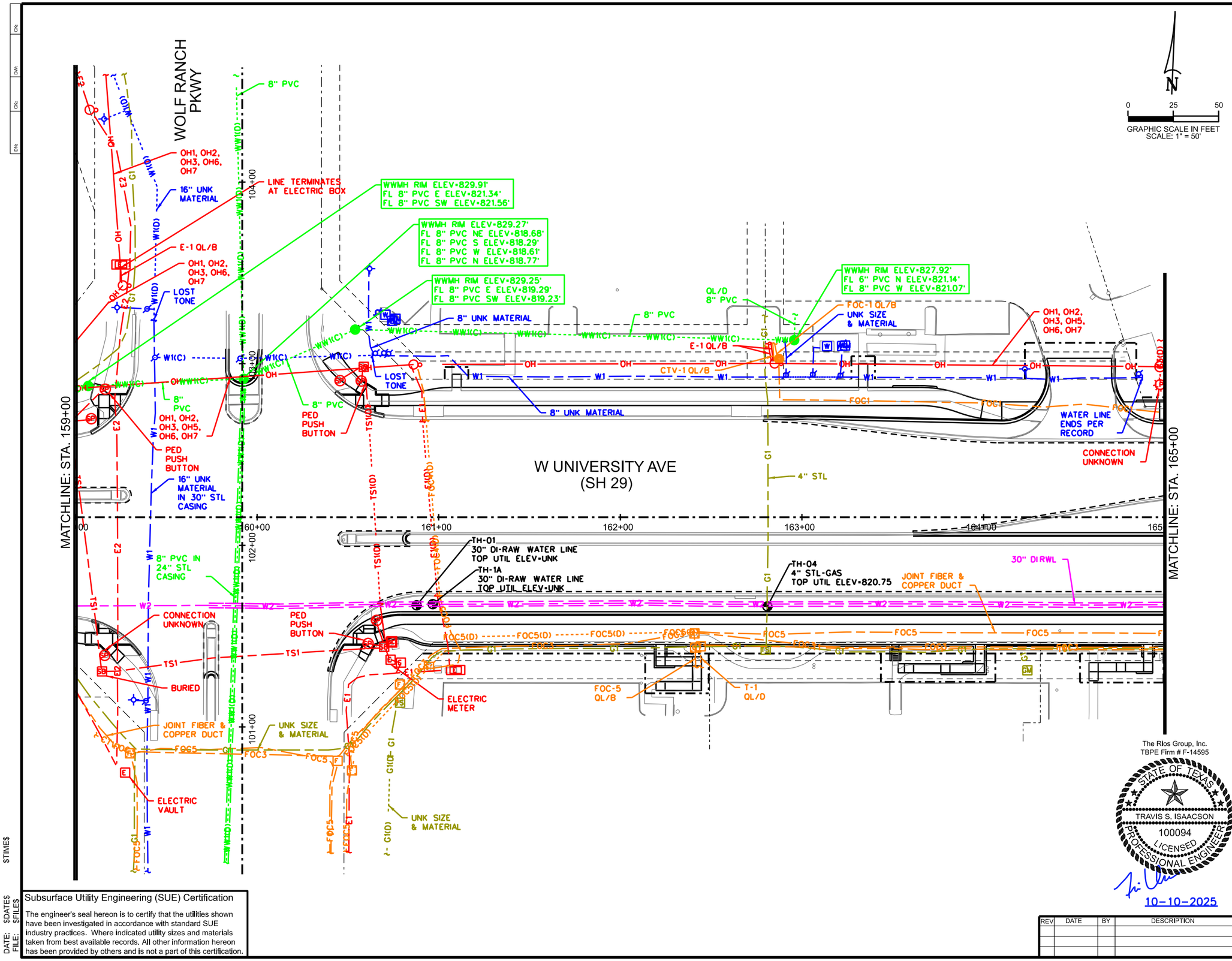

LEGEND OF UTILITY TYPES

QUALITY LEVELS
- QUALITY LEVEL "B"
- QUALITY LEVEL "C"
- QUALITY LEVEL "D"
- ABANDONED UTILITY
- PROPOSED UTILITY
- UNKNOWN UTILITY

COMMUNICATIONS QL "B"
- FRONTIER (TELE) — T1
- AT&T (FO/DUCT) — FOC1
- FIBERLIGHT (FO/DUCT) — FOC2
- FRONTIER (FO/DUCT) — FOC3
- MCI (FO/DUCT) — FOC4
- OPTIMUM (FO/DUCT) — FOC5
- GUS (FO/DUCT) — FOC6
- OPTIMUM (CABLE) — CTV1

ELECTRIC / POWER QL "B"
- GEORGETOWN UTILITY SYSTEMS — E1
- PEDERNALES ELECTRIC COOPERATIVE — E2
- PRIVATE — E3

GAS / PETROLEUM QL "B"
- ATMOS — G1

SANITARY SEWER QL "B"
- CITY OF GEORGETOWN — WW1

WATER QL "B"
- CITY OF GEORGETOWN — W1
- CITY OF ROUND ROCK (RAW WATER) — W2

TRAFFIC SIGNALS QL "B"
- TXDOT — TS1

OVERHEAD UTILITY QL "C"/"D" — OH
- OH1 - GUS - ELECTRIC
- OH2 - GUS - FIBER
- OH3 - OPTIMUM - CTV/FIBER
- OH4 - AT&T - FIBER
- OH5 - FIBERLIGHT - FIBER
- OH6 - MCI - FIBER
- OH7 - FRONTIER - TELE
- OH8 - FRONTIER - FIBER
- OH9 - PEC - ELECTRIC

LEGEND OF UTILITY SYMBOLS

- END CAP
- QUALITY LEVEL CHANGE
- TEST HOLE
- UTILITY CONTINUATION
- CATV CABINET
- CATV HANDHOLE
- FIBER HANDHOLE
- FIBER PEDESTAL
- TELEPHONE HANDHOLE (VAULT)
- TELEPHONE MANHOLE
- TELEPHONE PEDESTAL
- TELEPHONE POLE
- TELEPHONE POLE W/RISER
- ELECTRIC HANDHOLE
- ELECTRIC JUNCTION BOX (CABINET)
- ELECTRIC MANHOLE
- ELECTRIC POLE (POWER)
- ELECTRIC POLE W/RISER
- LIGHT POLE
- SIGNAL POLE
- SIGNAL HANDHOLE/BOX
- TRANSMISSION POLE
- GAS METER
- GAS TEST STATION
- GAS VALVE
- GAS VENT PIPE (GAS RISER)
- WASTE WATER CLEANOUT
- WASTE WATER MANHOLE
- FIRE HYDRANT
- WATER MANHOLE
- WATER METER
- WATER VALVE
- WATER VAULT

Subsurface Utility Engineering (SUE) Certification

The engineer's seal hereon is to certify that the utilities shown have been investigated in accordance with standard SUE industry practices. Where indicated utility sizes and materials taken from best available records. All other information hereon has been provided by others and is not a part of this certification.

DATE: $DATE$
FILE: $FILE$
$TIME$

Kimley»Horn

The Rios Group, Inc.
TBPE Firm # F-14595

THE RIOS GROUP
SUBSURFACE UTILITY ENGINEERING
UTILITY COORDINATION
575 ROUND ROCK WEST DRIVE
BUILDING K, SUITE 400
ROUND ROCK, TX 78681

STATE OF TEXAS
TRAVIS S. ISAACSON
100094
LICENSED
PROFESSIONAL ENGINEER
10-10-2025

Texas Department of Transportation

SH 29 AUSTIN DISTRICT
GEORGETOWN, TEXAS

S.U.E. PLAN SHEET

STA. 159.00 TO STA. 165+00

SHEET 4 OF 8

REV	DATE	BY	DESCRIPTION

CONT	SECT	JOB	HIGHWAY
0337	01	053	SH 29
DIST	COUNTY		SHEET NO.
AUS	WILLIAMSON		244

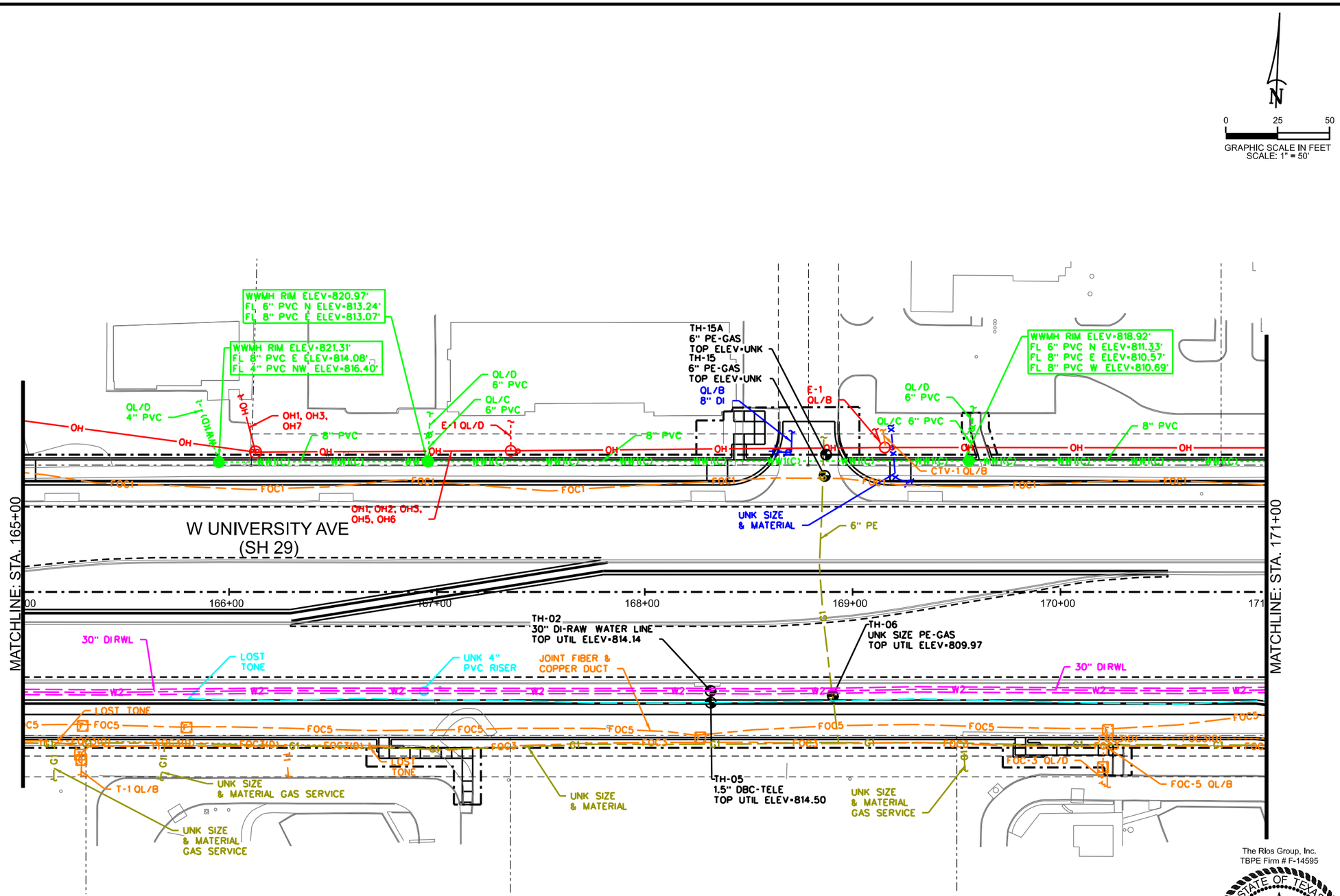

0 25 50
GRAPHIC SCALE IN FEET
SCALE: 1" = 50'

LEGEND OF UTILITY TYPES

QUALITY LEVELS
- QUALITY LEVEL "B"
- QUALITY LEVEL "C"
- QUALITY LEVEL "D"
- ABANDONED UTILITY
- PROPOSED UTILITY
- UNKNOWN UTILITY

COMMUNICATIONS QL "B"
- FRONTIER (TELE) — T1
- AT&T (FO/DUCT) — FOC1
- FIBERLIGHT (FO/DUCT) — FOC2
- FRONTIER (FO/DUCT) — FOC3
- MCI (FO/DUCT) — FOC4
- OPTIMUM (FO/DUCT) — FOC5
- GUS (FO/DUCT) — FOC6
- OPTIMUM (CABLE) — CTV1

ELECTRIC / POWER QL "B"
- GEORGETOWN UTILITY SYSTEMS — E1
- PEDERNALES ELECTRIC COOPERATIVE — E2
- PRIVATE — E3

GAS / PETROLEUM QL "B"
- ATMOS — G1

SANITARY SEWER QL "B"
- CITY OF GEORGETOWN — WW1

WATER QL "B"
- CITY OF GEORGETOWN — W1
- CITY OF ROUND ROCK (RAW WATER) — W2

TRAFFIC SIGNALS QL "B"
- TXDOT — TS1

OVERHEAD UTILITY QL "C"/"D" — OH
- OH1 - GUS - ELECTRIC
- OH2 - GUS - FIBER
- OH3 - OPTIMUM - CTV/FIBER
- OH4 - AT&T - FIBER
- OH5 - FIBERLIGHT - FIBER
- OH6 - MCI - FIBER
- OH7 - FRONTIER - TELE
- OH8 - FRONTIER - FIBER
- OH9 - PEC - ELECTRIC

LEGEND OF UTILITY SYMBOLS

- END CAP
- QUALITY LEVEL CHANGE
- TEST HOLE
- UTILITY CONTINUATION
- CATV CABINET
- CATV HANDHOLE
- FIBER HANDHOLE
- FIBER PEDESTAL
- TELEPHONE HANDHOLE (VAULT)
- TELEPHONE MANHOLE
- TELEPHONE PEDESTAL
- TELEPHONE POLE
- TELEPHONE POLE W/RISER
- ELECTRIC HANDHOLE
- ELECTRIC JUNCTION BOX (CABINET)
- ELECTRIC MANHOLE
- ELECTRIC POLE (POWER)
- ELECTRIC POLE W/RISER
- LIGHT POLE
- SIGNAL POLE
- SIGNAL HANDHOLE/BOX
- TRANSMISSION POLE
- GAS METER
- GAS TEST STATION
- GAS VALVE
- GAS VENT PIPE (GAS RISER)
- WASTE WATER CLEANOUT
- WASTE WATER MANHOLE
- FIRE HYDRANT
- WATER MANHOLE
- WATER METER
- WATER VALVE
- WATER VAULT

Kimley»Horn

The Rios Group, Inc.
TBPE Firm # F-14595

THE RIOS GROUP
SUBSURFACE UTILITY ENGINEERING
UTILITY COORDINATION
575 ROUND ROCK WEST DRIVE
BUILDING K, SUITE 400
ROUND ROCK, TX 78681

Texas Department of Transportation

STATE OF TEXAS
TRAVIS S. ISAACSON
100094
LICENSED
PROFESSIONAL ENGINEER
10-10-2025

SH 29 AUSTIN DISTRICT
GEORGETOWN, TEXAS

S.U.E. PLAN SHEET

STA. 165+00 TO STA. 171+00

SHEET 5 OF 8

CONT	SECT	JOB	HIGHWAY
0337	01	053	SH 29
DIST	COUNTY		SHEET NO.
AUS	WILLIAMSON		245

REV	DATE	BY	DESCRIPTION

Subsurface Utility Engineering (SUE) Certification

The engineer's seal hereon is to certify that the utilities shown have been investigated in accordance with standard SUE industry practices. Where indicated utility sizes and materials taken from best available records. All other information hereon has been provided by others and is not a part of this certification.

DATE: $DATE$
FILE: $FILE$
$TIME$

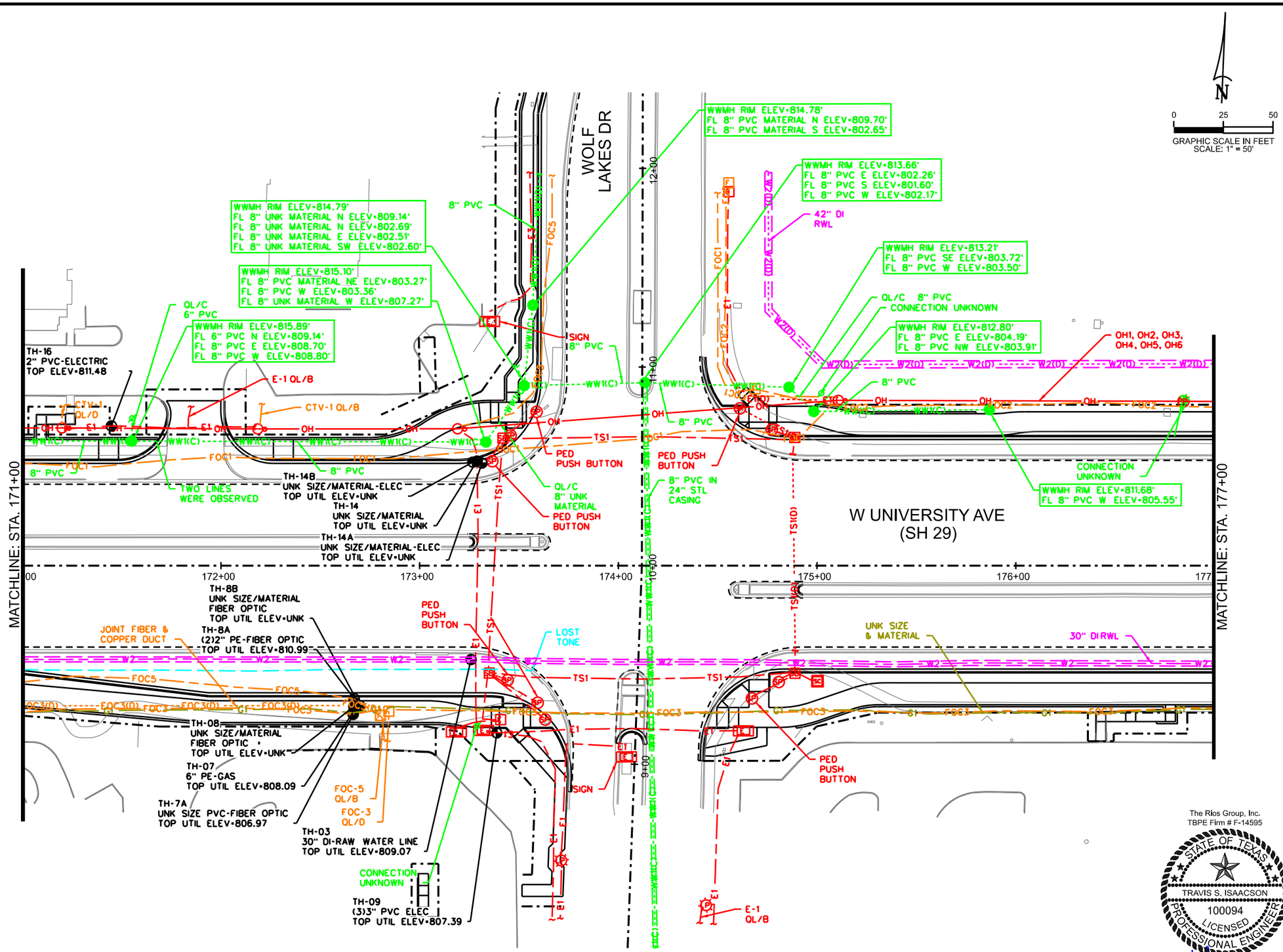

LEGEND OF UTILITY TYPES

QUALITY LEVELS
- QUALITY LEVEL "B"
- QUALITY LEVEL "C"
- QUALITY LEVEL "D"
- ABANDONED UTILITY
- PROPOSED UTILITY
- UNKNOWN UTILITY

COMMUNICATIONS QL "B"
- FRONTIER (TELE) — T1
- AT&T (FO/DUCT) — FOC1
- FIBERLIGHT (FO/DUCT) — FOC2
- FRONTIER (FO/DUCT) — FOC3
- MCI (FO/DUCT) — FOC4
- OPTIMUM (FO/DUCT) — FOC5
- GUS (FO/DUCT) — FOC6
- OPTIMUM (CABLE) — CTV1

ELECTRIC / POWER QL "B"
- GEORGETOWN UTILITY SYSTEMS — E1
- PEDERNALES ELECTRIC COOPERATIVE — E2
- PRIVATE — E3

GAS / PETROLEUM QL "B"
- ATMOS — G1

SANITARY SEWER QL "B"
- CITY OF GEORGETOWN — WW1

WATER QL "B"
- CITY OF GEORGETOWN — W1
- CITY OF ROUND ROCK (RAW WATER) — W2

TRAFFIC SIGNALS QL "B"
- TXDOT — TS1

OVERHEAD UTILITY QL "C"/"D" — OH
- OH1 - GUS - ELECTRIC
- OH2 - GUS - FIBER
- OH3 - OPTIMUM - CTV/FIBER
- OH4 - AT&T - FIBER
- OH5 - FIBERLIGHT - FIBER
- OH6 - MCI - FIBER
- OH7 - FRONTIER - TELE
- OH8 - FRONTIER - FIBER
- OH9 - PEC - ELECTRIC

LEGEND OF UTILITY SYMBOLS

- END CAP
- QUALITY LEVEL CHANGE
- TEST HOLE
- UTILITY CONTINUATION
- CATV CABINET
- CATV HANDHOLE
- FIBER HANDHOLE
- FIBER PEDESTAL
- TELEPHONE HANDHOLE (VAULT)
- TELEPHONE MANHOLE
- TELEPHONE PEDESTAL
- TELEPHONE POLE
- TELEPHONE POLE W/RISER
- ELECTRIC HANDHOLE
- ELECTRIC JUNCTION BOX (CABINET)
- ELECTRIC MANHOLE
- ELECTRIC POLE (POWER)
- ELECTRIC POLE W/RISER
- LIGHT POLE
- SIGNAL POLE
- SIGNAL HANDHOLE/BOX
- TRANSMISSION POLE
- GAS METER
- GAS TEST STATION
- GAS VALVE
- GAS VENT PIPE (GAS RISER)
- WASTE WATER CLEANOUT
- WASTE WATER MANHOLE
- FIRE HYDRANT
- WATER MANHOLE
- WATER METER
- WATER VALVE
- WATER VAULT

Kimley»Horn

THE RIOS GROUP
SUBSURFACE UTILITY ENGINEERING
UTILITY COORDINATION
575 ROUND ROCK WEST DRIVE
BUILDING K, SUITE 400
ROUND ROCK, TX 78681

Texas Department of Transportation

SH 29 AUSTIN DISTRICT
GEORGETOWN, TEXAS

S.U.E. PLAN SHEET

STA. 171+00 TO STA. 177+00

SHEET 6 OF 8

CONT	SECT	JOB	HIGHWAY
0337	01	053	SH 29
DIST	COUNTY		SHEET NO.
AUS	WILLIAMSON		246

The Rios Group, Inc.
TBPE Firm # F-14595

STATE OF TEXAS
TRAVIS S. ISAACSON
100094
LICENSED PROFESSIONAL ENGINEER

10-10-2025

REV	DATE	BY	DESCRIPTION

Subsurface Utility Engineering (SUE) Certification

The engineer's seal hereon is to certify that the utilities shown have been investigated in accordance with standard SUE industry practices. Where indicated utility sizes and materials taken from best available records. All other information hereon has been provided by others and is not a part of this certification.

DATE: $DATE$
FILE: $FILE$
$TIME$

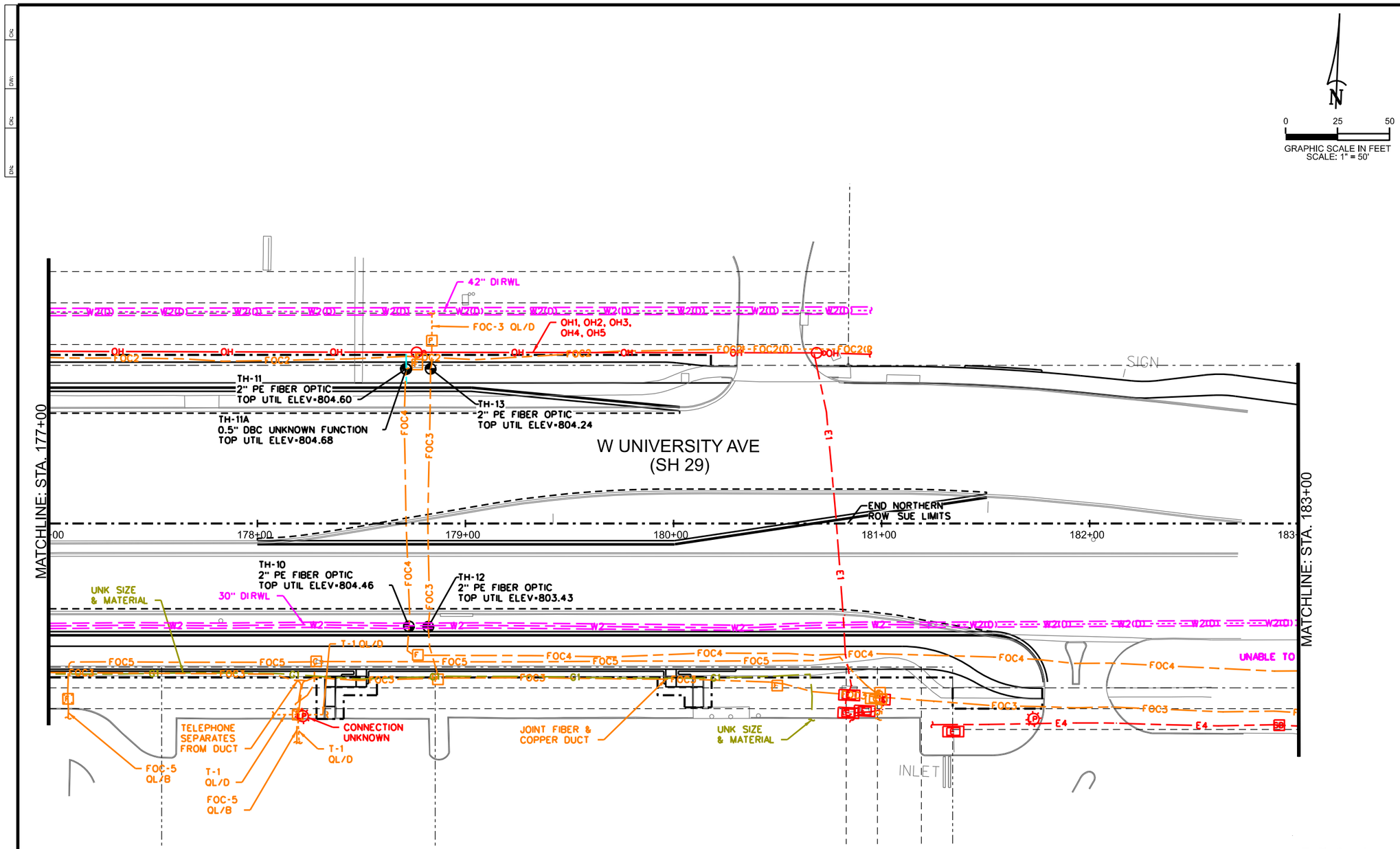

LEGEND OF UTILITY TYPES

QUALITY LEVELS
- QUALITY LEVEL "B"
- QUALITY LEVEL "C"
- QUALITY LEVEL "D"
- ABANDONED UTILITY
- PROPOSED UTILITY
- UNKNOWN UTILITY

COMMUNICATIONS QL "B"
- FRONTIER (TELE) — T1
- AT&T (FO/DUCT) — FOC1
- FIBERLIGHT (FO/DUCT) — FOC2
- FRONTIER (FO/DUCT) — FOC3
- MCI (FO/DUCT) — FOC4
- OPTIMUM (FO/DUCT) — FOC5
- GUS (FO/DUCT) — FOC6
- OPTIMUM (CABLE) — CTV1

ELECTRIC / POWER QL "B"
- GEORGETOWN UTILITY SYSTEMS — E1
- PEDERNALES ELECTRIC COOPERATIVE — E2
- PRIVATE — E3

GAS / PETROLEUM QL "B"
- ATMOS — G1

SANITARY SEWER QL "B"
- CITY OF GEORGETOWN — WW1

WATER QL "B"
- CITY OF GEORGETOWN — W1
- CITY OF ROUND ROCK (RAW WATER) — W2

TRAFFIC SIGNALS QL "B"
- TXDOT — TS1

OVERHEAD UTILITY QL "C"/"D" — OH
- OH1 - GUS - ELECTRIC
- OH2 - GUS - FIBER
- OH3 - OPTIMUM - CTV/FIBER
- OH4 - AT&T - FIBER
- OH5 - FIBERLIGHT - FIBER
- OH6 - MCI - FIBER
- OH7 - FRONTIER - TELE
- OH8 - FRONTIER - FIBER
- OH9 - PEC - ELECTRIC

LEGEND OF UTILITY SYMBOLS

- END CAP
- QUALITY LEVEL CHANGE
- TEST HOLE
- UTILITY CONTINUATION
- CATV CABINET
- CATV HANDHOLE
- FIBER HANDHOLE
- FIBER PEDESTAL
- TELEPHONE HANDHOLE (VAULT)
- TELEPHONE MANHOLE
- TELEPHONE PEDESTAL
- TELEPHONE POLE
- TELEPHONE POLE W/RISER
- ELECTRIC HANDHOLE
- ELECTRIC JUNCTION BOX (CABINET)
- ELECTRIC MANHOLE
- ELECTRIC POLE (POWER)
- ELECTRIC POLE W/RISER
- LIGHT POLE
- SIGNAL POLE
- SIGNAL HANDHOLE/BOX
- TRANSMISSION POLE
- GAS METER
- GAS TEST STATION
- GAS VALVE
- GAS VENT PIPE (GAS RISER)
- WASTE WATER CLEANOUT
- WASTE WATER MANHOLE
- FIRE HYDRANT
- WATER MANHOLE
- WATER METER
- WATER VALVE
- WATER VAULT

Kimley»Horn

THE RIOS GROUP
SUBSURFACE UTILITY ENGINEERING
UTILITY COORDINATION
575 ROUND ROCK WEST DRIVE
BUILDING K, SUITE 400
ROUND ROCK, TX 78681

Texas Department of Transportation

The Rios Group, Inc.
TBPE Firm # F-14595

STATE OF TEXAS
TRAVIS S. ISAACSON
100094
LICENSED
PROFESSIONAL ENGINEER

10-10-2025

SH 29 AUSTIN DISTRICT
GEORGETOWN, TEXAS

S.U.E. PLAN SHEET

STA. 177+00 TO STA. 183+00

SHEET 7 OF 8

CONT	SECT	JOB	HIGHWAY
0337	01	053	SH 29
DIST	COUNTY		SHEET NO.
AUS	WILLIAMSON		247

REV	DATE	BY	DESCRIPTION

Subsurface Utility Engineering (SUE) Certification

The engineer's seal hereon is to certify that the utilities shown have been investigated in accordance with standard SUE industry practices. Where indicated utility sizes and materials taken from best available records. All other information hereon has been provided by others and is not a part of this certification.

DATE: $DATE$
FILE: $FILE$
$TIME$

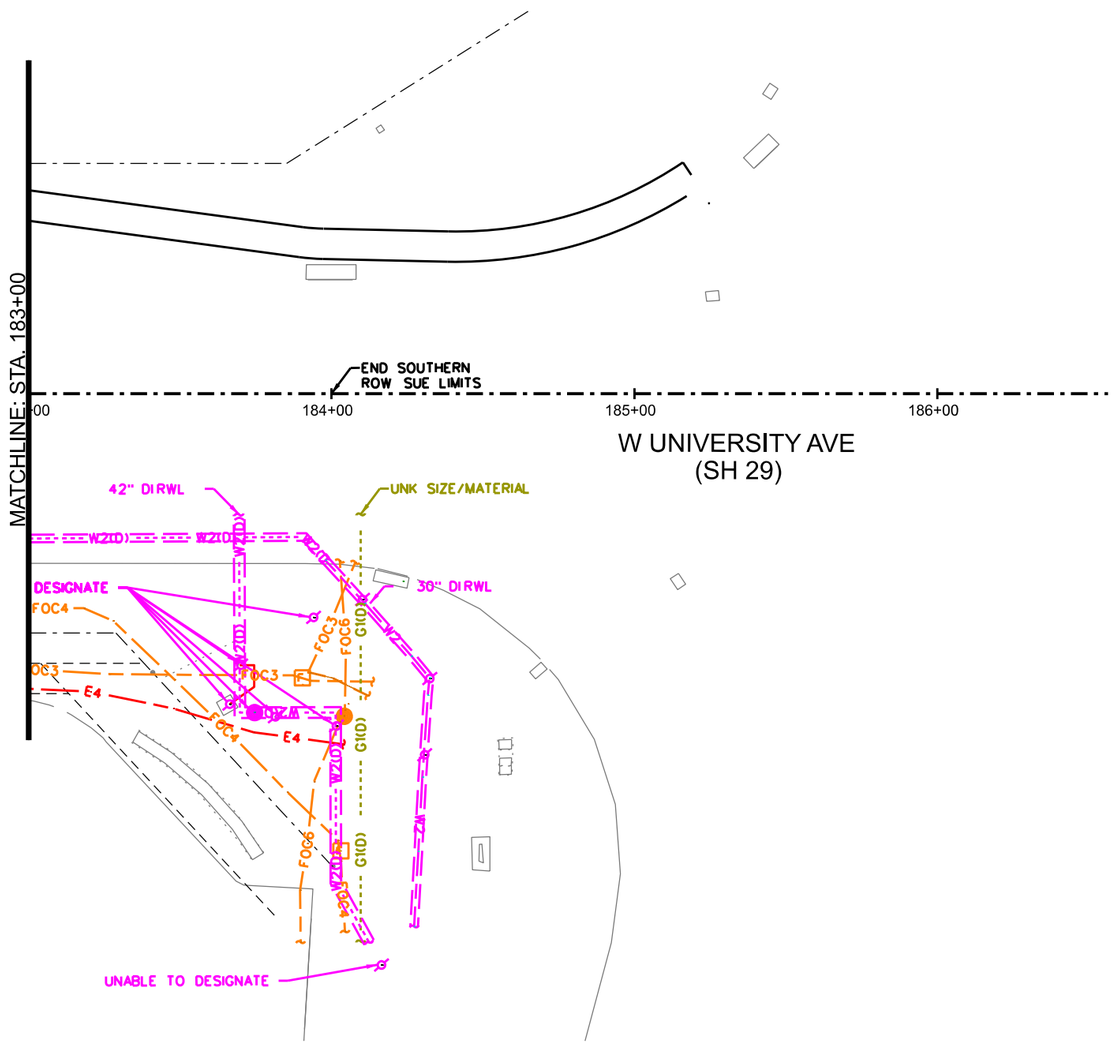

N

0 25 50

GRAPHIC SCALE IN FEET
SCALE: 1" = 50'

LEGEND OF UTILITY TYPES

QUALITY LEVELS
- QUALITY LEVEL "B"
- QUALITY LEVEL "C"
- QUALITY LEVEL "D"
- ABANDONED UTILITY
- PROPOSED UTILITY
- UNKNOWN UTILITY

COMMUNICATIONS QL "B"
- FRONTIER (TELE) — T1
- AT&T (FO/DUCT) — FOC1
- FIBERLIGHT (FO/DUCT) — FOC2
- FRONTIER (FO/DUCT) — FOC3
- MCI (FO/DUCT) — FOC4
- OPTIMUM (FO/DUCT) — FOC5
- GUS (FO/DUCT) — FOC6
- OPTIMUM (CABLE) — CTV1

ELECTRIC / POWER QL "B"
- GEORGETOWN UTILITY SYSTEMS — E1
- PEDERNALES ELECTRIC COOPERATIVE — E2
- PRIVATE — E3

GAS / PETROLEUM QL "B"
- ATMOS — G1

SANITARY SEWER QL "B"
- CITY OF GEORGETOWN — WW1

WATER QL "B"
- CITY OF GEORGETOWN — W1
- CITY OF ROUND ROCK (RAW WATER) — W2

TRAFFIC SIGNALS QL "B"
- TXDOT — TS1

OVERHEAD UTILITY QL "C"/"D"
- OH1 - GUS - ELECTRIC
- OH2 - GUS - FIBER
- OH3 - OPTIMUM - CTV/FIBER
- OH4 - AT&T - FIBER
- OH5 - FIBERLIGHT - FIBER
- OH6 - MCI - FIBER
- OH7 - FRONTIER - TELE
- OH8 - FRONTIER - FIBER
- OH9 - PEC - ELECTRIC

— OH —

LEGEND OF UTILITY SYMBOLS

- END CAP
- QUALITY LEVEL CHANGE
- TEST HOLE
- UTILITY CONTINUATION
- CATV CABINET
- CATV HANDHOLE
- FIBER HANDHOLE
- FIBER PEDESTAL
- TELEPHONE HANDHOLE (VAULT)
- TELEPHONE MANHOLE
- TELEPHONE PEDESTAL
- TELEPHONE POLE
- TELEPHONE POLE W/RISER
- ELECTRIC HANDHOLE
- ELECTRIC JUNCTION BOX (CABINET)
- ELECTRIC MANHOLE
- ELECTRIC POLE (POWER)
- ELECTRIC POLE W/RISER
- LIGHT POLE
- SIGNAL POLE
- SIGNAL HANDHOLE/BOX
- TRANSMISSION POLE
- GAS METER
- GAS TEST STATION
- GAS VALVE
- GAS VENT PIPE (GAS RISER)
- WASTE WATER CLEANOUT
- WASTE WATER MANHOLE
- FIRE HYDRANT
- WATER MANHOLE
- WATER METER
- WATER VALVE
- WATER VAULT

Kimley»Horn

The Rios Group, Inc.
TBPE Firm # F-14595

THE RIOS GROUP
SUBSURFACE UTILITY ENGINEERING
UTILITY COORDINATION
575 ROUND ROCK WEST DRIVE
BUILDING K, SUITE 400
ROUND ROCK, TX 78681

STATE OF TEXAS
TRAVIS S. ISAACSON
100094
LICENSED PROFESSIONAL ENGINEER

10-10-2025

Texas Department of Transportation

SH 29 AUSTIN DISTRICT
GEORGETOWN, TEXAS

S.U.E. PLAN SHEET

STA. 183+00 TO END

SHEET 8 OF 8

CONT	SECT	JOB	HIGHWAY
0337	01	053	SH 29
DIST	COUNTY		SHEET NO.
AUS	WILLIAMSON		248

REV	DATE	BY	DESCRIPTION

Subsurface Utility Engineering (SUE) Certification

The engineer's seal hereon is to certify that the utilities shown have been investigated in accordance with standard SUE industry practices. Where indicated utility sizes and materials taken from best available records. All other information hereon has been provided by others and is not a part of this certification.

DATE: $DATE$
FILE: $FILE$
$TIME$

NOT TO SCALE

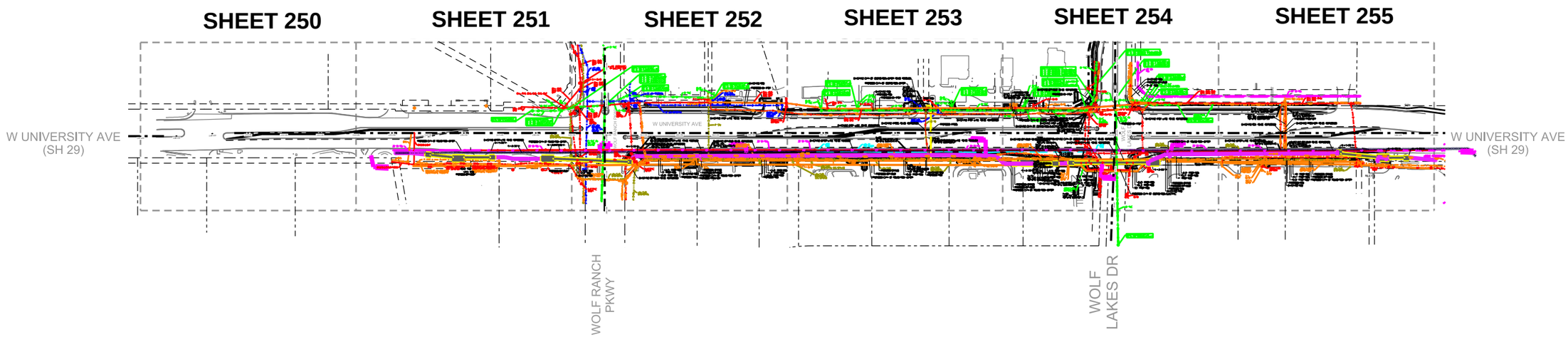

SPECIAL NOTES

1. ALL PIPE SIZES WERE TAKEN FROM UTILITY RECORDS WHERE POSSIBLE. THE UTILITIES DEPICTED WERE INVESTIGATED BY THE RIOS GROUP, INC.. ALL OTHER PLAN INFORMATION, NOTABLY THE BACKGROUND INFORMATION, WAS PROVIDED BY OTHERS AND THE RIOS GROUP, INC. DISCLAIMS RESPONSIBILITY FOR ITS ACCURACY.

2. EXISTING SUBSURFACE UTILITY INVESTIGATIONS WERE COMPLETED ON 07/28/2023. THE RIOS GROUP, INC. EXPRESSLY DISCLAIMS ANY AND ALL RESPONSIBILITY FOR NEW UTILITY INSTALLATIONS, MODIFICATIONS, AND/OR ADJUSTMENTS TO EXISTING UTILITIES AFTER THE COMPLETION DATE.

3. UTILITY LOCATIONS ON THESE DRAWINGS ARE INTENDED FOR DESIGN PURPOSES AND NOT CONSTRUCTION. THEY REFLECT SUBSURFACE UTILITIES AT THE TIME OF FIELD INVESTIGATION. CALL TEXAS ONE CALL SYSTEM (800)245-4545 FOR UTILITY LOCATIONS 48 HOURS PRIOR TO ANY WORK.

4. WHERE POSSIBLE, WATER, GAS, AND COMMUNICATION SERVICE LINES WERE DESIGNATED. HOWEVER, SOME SERVICE LINES ARE CONSTRUCTED OF NON-CONDUCTIVE MATERIAL AND UTILITY COMPANY DRAWINGS MAY NOT SHOW SERVICE LINE LOCATIONS. THEREFORE ALL SERVICE LINES MAY NOT BE SHOWN.

5. ALL UTILITY INFORMATION SHOWN HERON IS DEPICTED TO QUALITY LEVEL "D".

QUALITY LEVELS

QUALITY LEVEL "D" - INFORMATION DERIVED FROM EXISTING RECORDS AND/OR ORAL COLLECTION.

QUALITY LEVEL "C" - INFORMATION OBTAINED BY SURVEYING AND PLOTTING VISIBLE ABOVE GROUND UTILITY FEATURES AND BY USING PROFESSIONAL JUDGMENT IN CORRELATING INFORMATION TO QUALITY LEVEL "D" INFORMATION.

QUALITY LEVEL "B" - DESIGNATE: TWO-DIMENSIONAL HORIZONTAL MAPPING. THIS INFORMATION IS OBTAINED THROUGH THE APPLICATION AND INTERPRETATION OF APPROPRIATE NON-DESTRUCTIVE SURFACE GEOPHYSICAL METHODS. UTILITY INDICATIONS ARE REFERENCED TO ESTABLISHED SURVEY CONTROL. INCORPORATES QUALITY LEVELS "C" AND "D" INFORMATION TO PRODUCE QUALITY LEVEL "B" INFORMATION.

QUALITY LEVEL "A" - LOCATE: PRECISE HORIZONTAL AND VERTICAL LOCATION OF UTILITIES OBTAINED BY THE ACTUAL EXPOSURE AND SUBSEQUENT MEASUREMENT OF SUBSURFACE UTILITIES AT A SPECIFIC POINT. DIAMETERS SHOWN ARE VERIFIED VISUALLY AND MAY NOT BE EXACT.

MATERIAL ABBREVIATIONS

STL - STEEL
PE - POLYETHYLENE
AC - TRANSITE
CI - CAST IRON
DI - DUCTILE IRON
PVC - POLYVINYL CHLORIDE
DBC - DIRECT BURIED CABLE
RCP - REINFORCED CONCRETE PIPE
VC - VITRIFIED CLAY
FG - FIBERGLASS
CSC - CONCRETE/STEEL CYLINDER
CMP - CORRUGATED METAL PIPE
CONC - CONCRETE
CLAY - CLAY
UNK - UNKNOWN

GEORGETOWN TEXAS
more than welcome

THE RIOS GROUP
SUBSURFACE UTILITY ENGINEERING
UTILITY COORDINATION
575 ROUND ROCK WEST DRIVE
BUILDING K, SUITE 400
ROUND ROCK, TX 78681

Texas Department of Transportation

SH 29 AUSTIN DISTRICT
GEORGETOWN, TEXAS

COMPLETED
UTILITY RELOCATION
LAYOUTS
(PREFORMED BY OTHERS)

SHEET 1 OF 1

CONT	SECT	JOB	HIGHWAY
0337	01	053	SH 29
DIST	COUNTY		SHEET NO.
AUS	WILLIAMSON		249

OUTSIDE OF SUE LIMITS
NO SUE INVESTIGATION COMPLETED

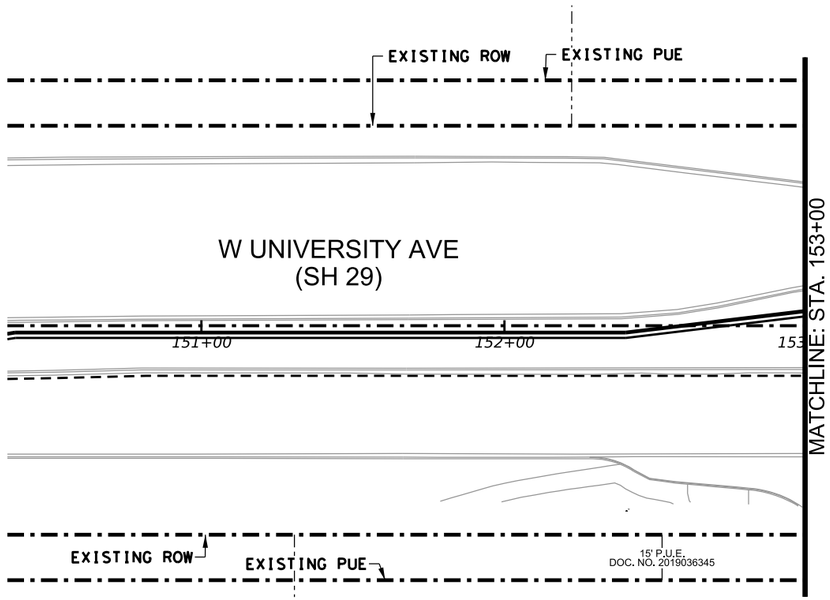

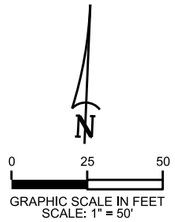

QUALITY LEVEL "B"	X#
QUALITY LEVEL "C"	X#(C)
QUALITY LEVEL "D"	X#(D)
ABANDONED UTILITY	X X X X
PROPOSED UTILITY	
UNKNOWN UTILITY	
COMMUNICATIONS	QL "B"
FRONTIER (TELE)	T1
AT&T (FO/DUCT)	FOC1
FIBERLIGHT (FO/DUCT)	FOC2
FRONTIER (FO/DUCT)	FOC3
MCI (FO/DUCT)	FOC4
OPTIMUM (FO/DUCT)	FOC5
GUS (FO/DUCT)	FOC6
OPTIMUM (CABLE)	CTV1
ELECTRIC / POWER	QL "B"
GEORGETOWN UTILITY SYSTEMS	E1
PEDERNALES ELECTRIC COOPERATIVE	E2
PRIVATE	E3
GAS / PETROLEUM	QL "B"
ATMOS	G1
SANITARY SEWER	QL "B"
CITY OF GEORGETOWN	WW1
WATER	QL "B"
CITY OF GEORGETOWN	W1
CITY OF ROUND ROCK (RAW WATER)	W2
TRAFFIC SIGNALS	QL "B"
TXDOT	TS1
OVERHEAD UTILITY	QL "C"/"D"
OH1 - GUS - ELECTRIC	OH
OH2 - GUS - FIBER	
OH3 - OPTIMUM - CTV/FIBER	
OH4 - AT&T - FIBER	
OH5 - FIBERLIGHT - FIBER	
OH6 - MCI - FIBER	
OH7 - FRONTIER - TELE	
OH8 - FRONTIER - FIBER	
OH9 - PEC - ELECTRIC	

GEORGETOWN TEXAS
more than welcome

THE RIOS GROUP
SUBSURFACE UTILITY ENGINEERING
UTILITY COORDINATION
575 ROUND ROCK WEST DRIVE
BUILDING K, SUITE 400
ROUND ROCK, TX 78681

Texas Department of Transportation

SH 29 AUSTIN DISTRICT
GEORGETOWN, TEXAS
COMPLETED
UTILITY RELOCATION
LAYOUTS
(PREFORMED BY OTHERS)
BEGINNING TO STA. 153+00

SHEET 1 OF 6

CONT	SECT	JOB	HIGHWAY
0337	01	053	SH 29
DIST	COUNTY		SHEET NO.
AUS	WILLIAMSON		250

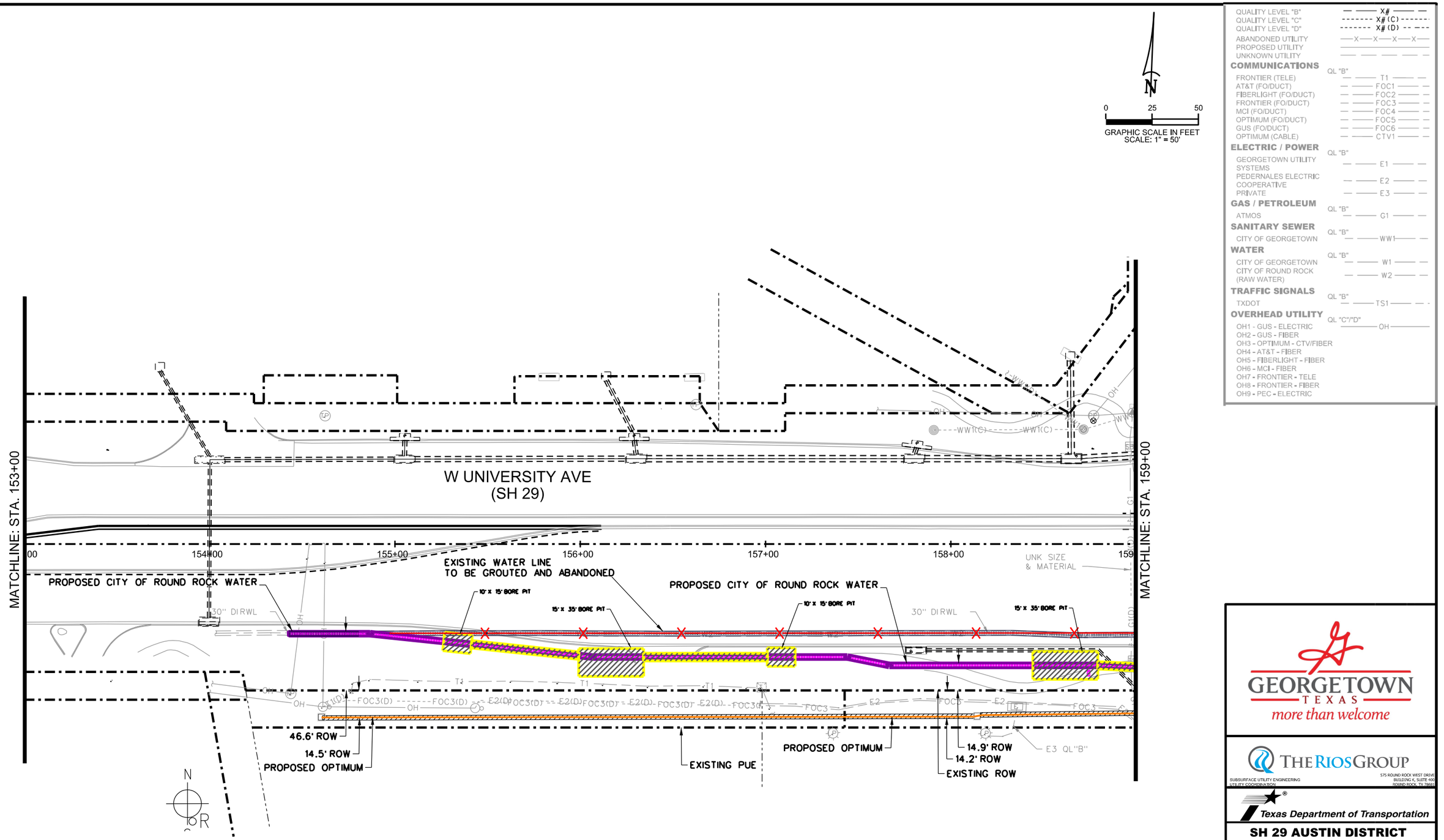

QUALITY LEVEL "B"	X#
QUALITY LEVEL "C"	X#(C)
QUALITY LEVEL "D"	X#(D)
ABANDONED UTILITY	X X X X
PROPOSED UTILITY	
UNKNOWN UTILITY	

COMMUNICATIONS	QL "B"	
FRONTIER (TELE)		T1
AT&T (FO/DUCT)		FOC1
FIBERLIGHT (FO/DUCT)		FOC2
FRONTIER (FO/DUCT)		FOC3
MCI (FO/DUCT)		FOC4
OPTIMUM (FO/DUCT)		FOC5
GUS (FO/DUCT)		FOC6
OPTIMUM (CABLE)		CTV1
ELECTRIC / POWER	QL "B"	
GEORGETOWN UTILITY SYSTEMS		E1
PEDERNALES ELECTRIC COOPERATIVE		E2
PRIVATE		E3
GAS / PETROLEUM	QL "B"	
ATMOS		G1
SANITARY SEWER	QL "B"	
CITY OF GEORGETOWN		WW1
WATER	QL "B"	
CITY OF GEORGETOWN		W1
CITY OF ROUND ROCK (RAW WATER)		W2
TRAFFIC SIGNALS	QL "B"	
TXDOT		TS1
OVERHEAD UTILITY	QL "C"/"D"	
OH1 - GUS - ELECTRIC		OH
OH2 - GUS - FIBER		
OH3 - OPTIMUM - CTV/FIBER		
OH4 - AT&T - FIBER		
OH5 - FIBERLIGHT - FIBER		
OH6 - MCI - FIBER		
OH7 - FRONTIER - TELE		
OH8 - FRONTIER - FIBER		
OH9 - PEC - ELECTRIC		

GEORGETOWN TEXAS
more than welcome

THE RIOS GROUP
SUBSURFACE UTILITY ENGINEERING
UTILITY COORDINATION
575 ROUND ROCK WEST DRIVE
BUILDING K, SUITE 400
ROUND ROCK, TX 78681

Texas Department of Transportation

SH 29 AUSTIN DISTRICT
GEORGETOWN, TEXAS
COMPLETED UTILITY RELOCATION LAYOUTS
(PREFORMED BY OTHERS)
STA. 153+00 TO STA. 159+00

CONT	SECT	JOB	HIGHWAY
0337	01	053	SH 29
DIST	COUNTY		SHEET NO.
AUS	WILLIAMSON		251

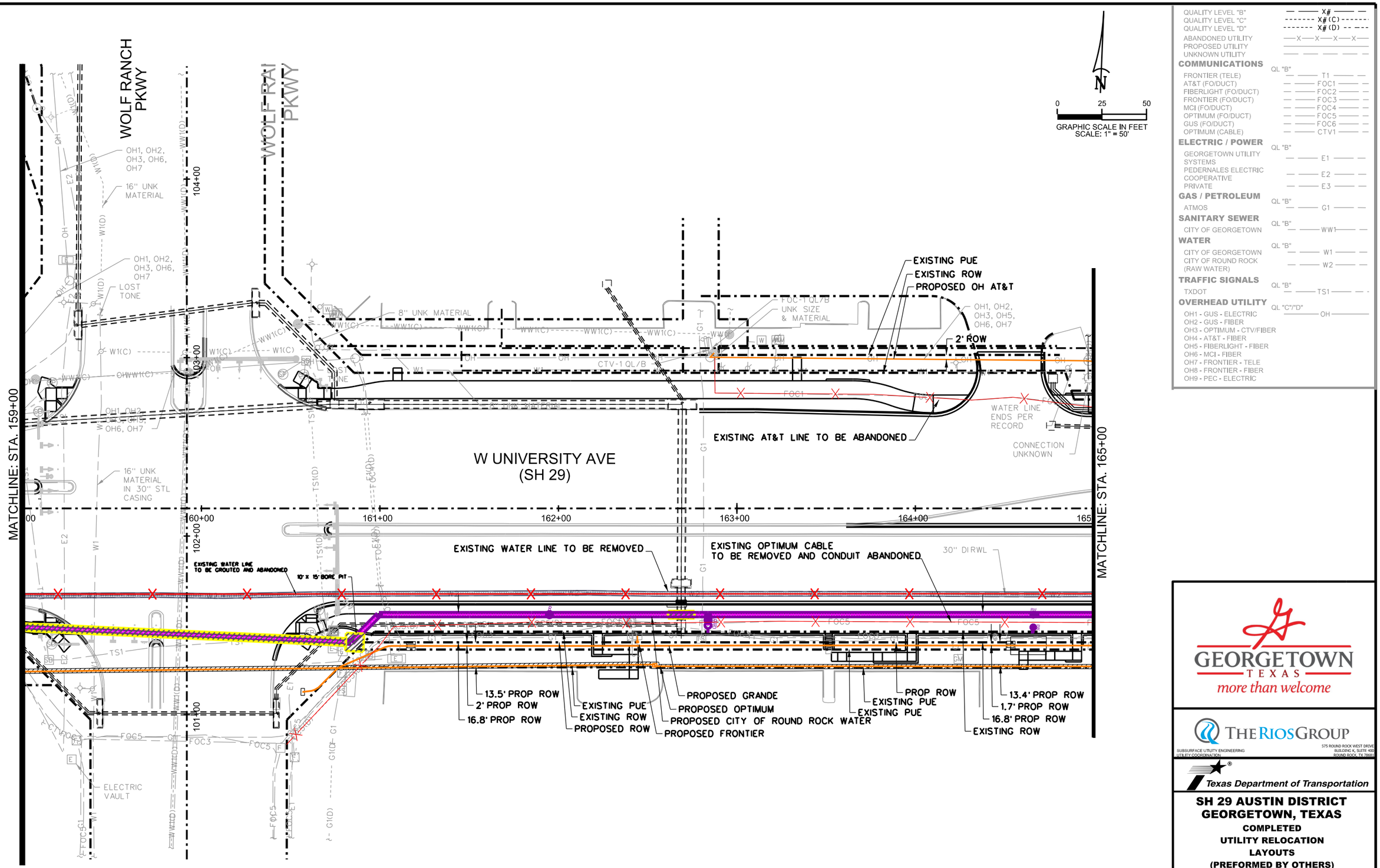

QUALITY LEVEL "B"	X#
QUALITY LEVEL "C"	X#(C)
QUALITY LEVEL "D"	X#(D)
ABANDONED UTILITY	
PROPOSED UTILITY	
UNKNOWN UTILITY	

COMMUNICATIONS QL "B"

FRONTIER (TELE)	T1
AT&T (FO/DUCT)	FOC1
FIBERLIGHT (FO/DUCT)	FOC2
FRONTIER (FO/DUCT)	FOC3
MCI (FO/DUCT)	FOC4
OPTIMUM (FO/DUCT)	FOC5
GUS (FO/DUCT)	FOC6
OPTIMUM (CABLE)	CTV1

ELECTRIC / POWER QL "B"

GEORGETOWN UTILITY SYSTEMS	E1
PEDERNALES ELECTRIC COOPERATIVE	E2
PRIVATE	E3

GAS / PETROLEUM QL "B"

ATMOS	G1

SANITARY SEWER QL "B"

CITY OF GEORGETOWN	WW1

WATER QL "B"

CITY OF GEORGETOWN	W1
CITY OF ROUND ROCK (RAW WATER)	W2

TRAFFIC SIGNALS QL "B"

TXDOT	TS1

OVERHEAD UTILITY QL "C"/"D"

OH1 - GUS - ELECTRIC
OH2 - GUS - FIBER
OH3 - OPTIMUM - CTV/FIBER
OH4 - AT&T - FIBER
OH5 - FIBERLIGHT - FIBER
OH6 - MCI - FIBER
OH7 - FRONTIER - TELE
OH8 - FRONTIER - FIBER
OH9 - PEC - ELECTRIC

GEORGETOWN TEXAS
more than welcome

THE RIOS GROUP
SUBSURFACE UTILITY ENGINEERING
UTILITY COORDINATION
575 ROUND ROCK WEST DRIVE
BUILDING K, SUITE 400
ROUND ROCK, TX 78681

Texas Department of Transportation

SH 29 AUSTIN DISTRICT
GEORGETOWN, TEXAS
COMPLETED UTILITY RELOCATION LAYOUTS
(PREFORMED BY OTHERS)
STA. 159.00 TO STA. 165+00

SHEET 3 OF 6

CONT	SECT	JOB	HIGHWAY
0337	01	053	SH 29
DIST	COUNTY		SHEET NO.
AUS	WILLIAMSON		252

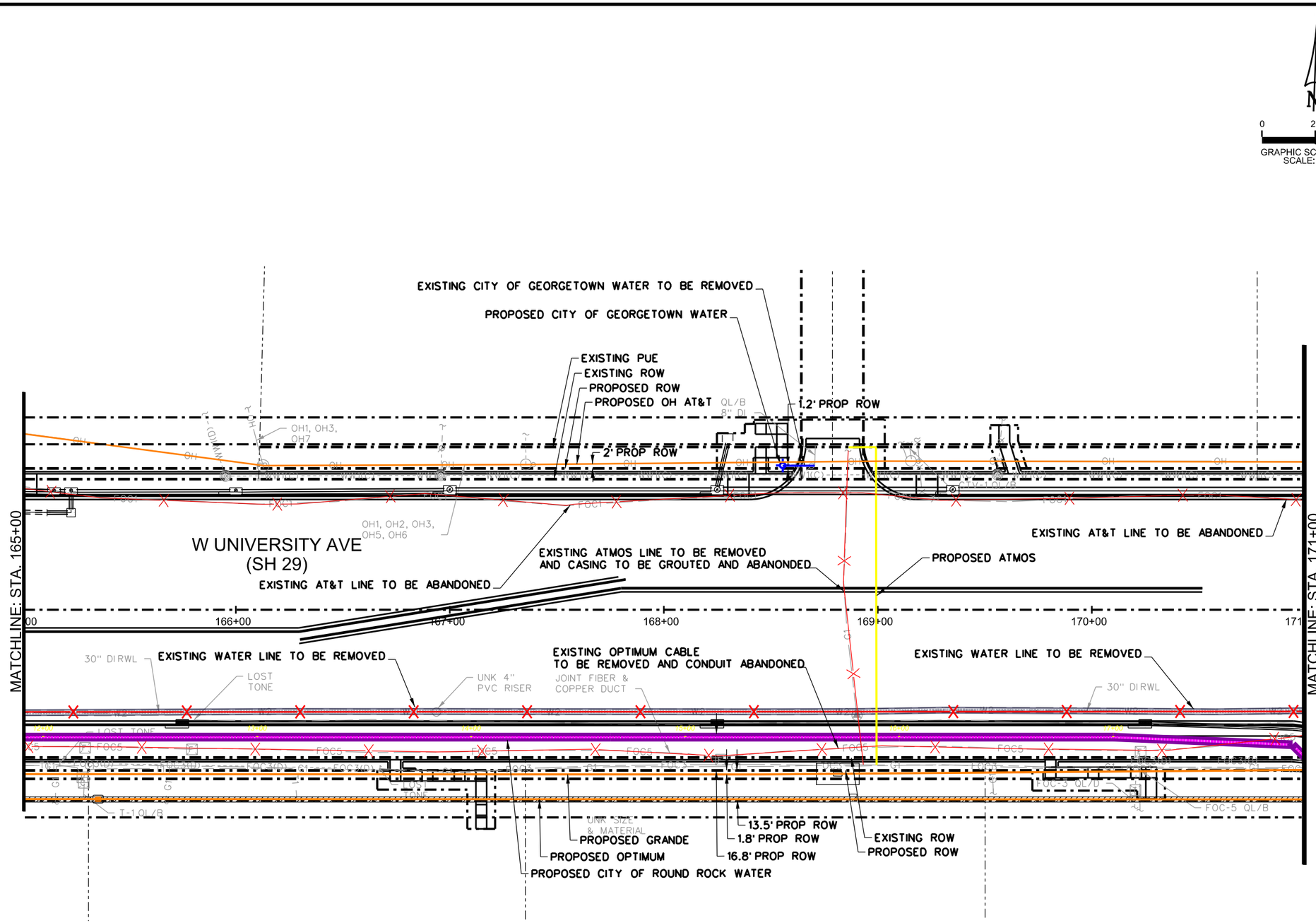

QUALITY LEVEL "B"	X#
QUALITY LEVEL "C"	X#(C)
QUALITY LEVEL "D"	X#(D)
ABANDONED UTILITY	X X X X
PROPOSED UTILITY	
UNKNOWN UTILITY	

COMMUNICATIONS	QL "B"	
FRONTIER (TELE)		T1
AT&T (FO/DUCT)		FOC1
FIBERLIGHT (FO/DUCT)		FOC2
FRONTIER (FO/DUCT)		FOC3
MCI (FO/DUCT)		FOC4
OPTIMUM (FO/DUCT)		FOC5
GUS (FO/DUCT)		FOC6
OPTIMUM (CABLE)		CTV1
ELECTRIC / POWER	QL "B"	
GEORGETOWN UTILITY SYSTEMS		E1
PEDERNALES ELECTRIC COOPERATIVE		E2
PRIVATE		E3
GAS / PETROLEUM	QL "B"	
ATMOS		G1
SANITARY SEWER	QL "B"	
CITY OF GEORGETOWN		WW1
WATER	QL "B"	
CITY OF GEORGETOWN		W1
CITY OF ROUND ROCK (RAW WATER)		W2
TRAFFIC SIGNALS	QL "B"	
TXDOT		TS1
OVERHEAD UTILITY	QL "C"/"D"	
OH1 - GUS - ELECTRIC		OH
OH2 - GUS - FIBER		
OH3 - OPTIMUM - CTV/FIBER		
OH4 - AT&T - FIBER		
OH5 - FIBERLIGHT - FIBER		
OH6 - MCI - FIBER		
OH7 - FRONTIER - TELE		
OH8 - FRONTIER - FIBER		
OH9 - PEC - ELECTRIC		

GEORGETOWN TEXAS
more than welcome

THE RIOS GROUP
SUBSURFACE UTILITY ENGINEERING
UTILITY COORDINATION
575 ROUND ROCK WEST DRIVE
BUILDING K, SUITE 400
ROUND ROCK, TX 78681

Texas Department of Transportation

SH 29 AUSTIN DISTRICT
GEORGETOWN, TEXAS

COMPLETED
UTILITY RELOCATION
LAYOUTS
(PREFORMED BY OTHERS)

STA. 165+00 TO STA. 171+00

SHEET 4 OF 6

CONT	SECT	JOB	HIGHWAY
0337	01	053	SH 29
DIST	COUNTY		SHEET NO.
AUS	WILLIAMSON		253

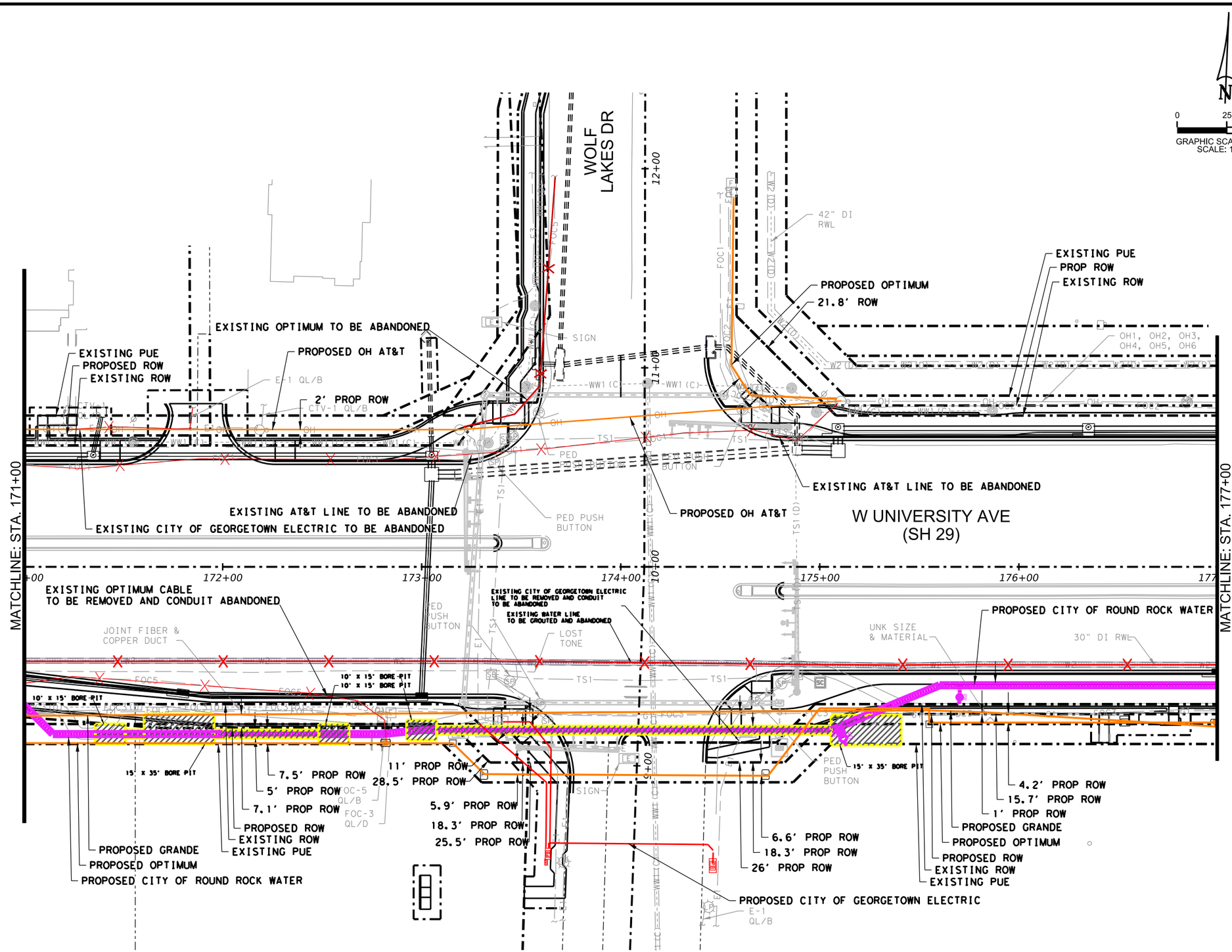

QUALITY LEVEL "B" — X# —
QUALITY LEVEL "C" - - - X#(C) - - -
QUALITY LEVEL "D" - - - X#(D) - - -
ABANDONED UTILITY —X—X—X—X—
PROPOSED UTILITY
UNKNOWN UTILITY

COMMUNICATIONS QL "B"
- FRONTIER (TELE) — T1
- AT&T (FO/DUCT) — FOC1
- FIBERLIGHT (FO/DUCT) — FOC2
- FRONTIER (FO/DUCT) — FOC3
- MCI (FO/DUCT) — FOC4
- OPTIMUM (FO/DUCT) — FOC5
- GUS (FO/DUCT) — FOC6
- OPTIMUM (CABLE) — CTV1

ELECTRIC / POWER QL "B"
- GEORGETOWN UTILITY SYSTEMS — E1
- PEDERNALES ELECTRIC COOPERATIVE — E2
- PRIVATE — E3

GAS / PETROLEUM QL "B"
- ATMOS — G1

SANITARY SEWER QL "B"
- CITY OF GEORGETOWN — WW1

WATER QL "B"
- CITY OF GEORGETOWN — W1
- CITY OF ROUND ROCK (RAW WATER) — W2

TRAFFIC SIGNALS QL "B"
- TXDOT — TS1

OVERHEAD UTILITY QL "C"/"D" — OH
- OH1 - GUS - ELECTRIC
- OH2 - GUS - FIBER
- OH3 - OPTIMUM - CTV/FIBER
- OH4 - AT&T - FIBER
- OH5 - FIBERLIGHT - FIBER
- OH6 - MCI - FIBER
- OH7 - FRONTIER - TELE
- OH8 - FRONTIER - FIBER
- OH9 - PEC - ELECTRIC

GEORGETOWN TEXAS
more than welcome

THE RIOS GROUP
SUBSURFACE UTILITY ENGINEERING
UTILITY COORDINATION
575 ROUND ROCK WEST DRIVE
BUILDING K, SUITE 400
ROUND ROCK, TX 78681

Texas Department of Transportation

SH 29 AUSTIN DISTRICT
GEORGETOWN, TEXAS
COMPLETED UTILITY RELOCATION LAYOUTS (PREFORMED BY OTHERS)
STA. 171+00 TO STA. 177+00

CONT	SECT	JOB	HIGHWAY
0337	01	053	SH 29
DIST	COUNTY		SHEET NO.
AUS	WILLIAMSON		254

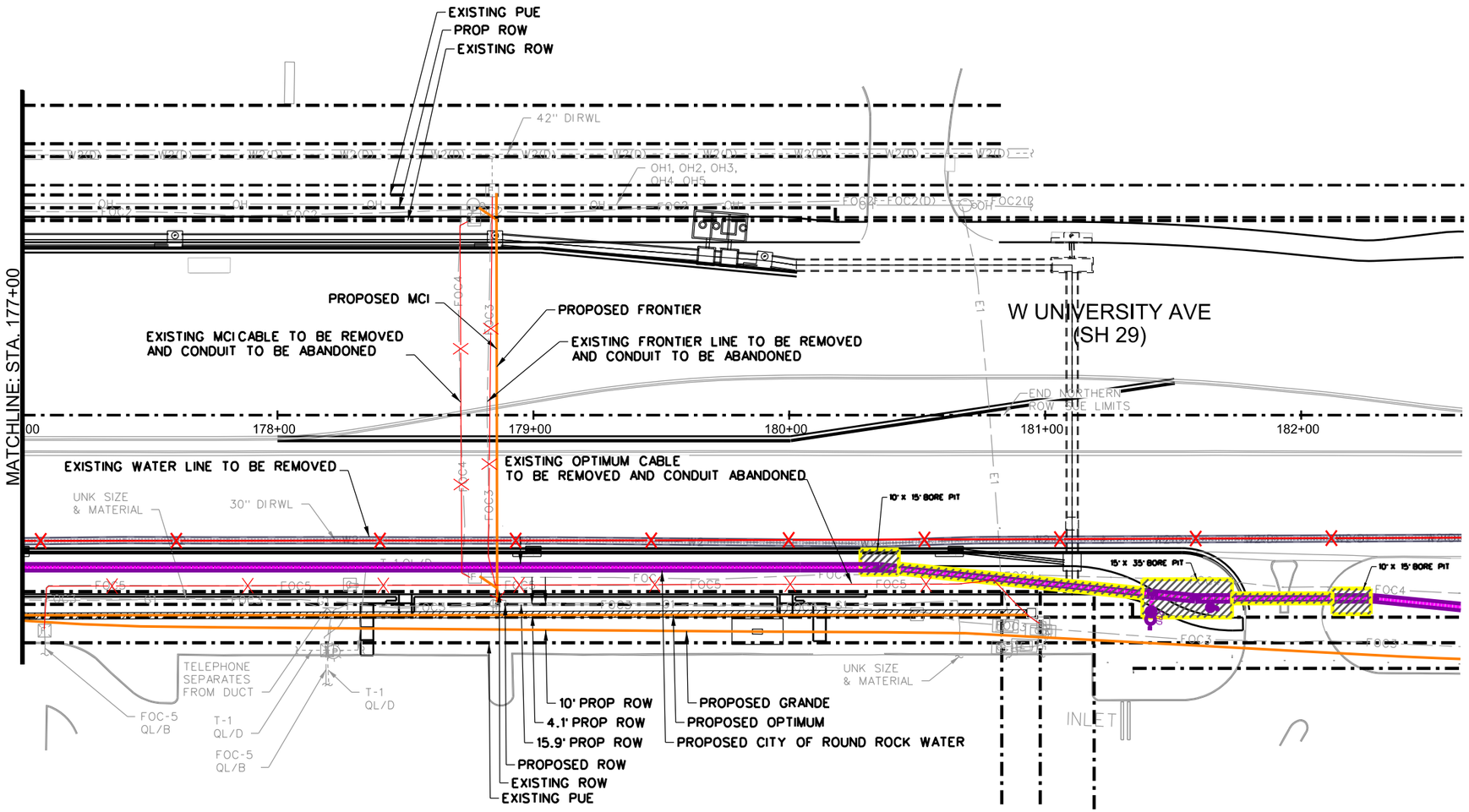

N

0 25 50

GRAPHIC SCALE IN FEET
SCALE: 1" = 50'

QUALITY LEVEL "B"	X#
QUALITY LEVEL "C"	X#(C)
QUALITY LEVEL "D"	X#(D)
ABANDONED UTILITY	X X X X
PROPOSED UTILITY	
UNKNOWN UTILITY	
COMMUNICATIONS	QL "B"
FRONTIER (TELE)	T1
AT&T (FO/DUCT)	FOC1
FIBERLIGHT (FO/DUCT)	FOC2
FRONTIER (FO/DUCT)	FOC3
MCI (FO/DUCT)	FOC4
OPTIMUM (FO/DUCT)	FOC5
GUS (FO/DUCT)	FOC6
OPTIMUM (CABLE)	CTV1
ELECTRIC / POWER	QL "B"
GEORGETOWN UTILITY SYSTEMS	E1
PEDERNALES ELECTRIC COOPERATIVE	E2
PRIVATE	E3
GAS / PETROLEUM	QL "B"
ATMOS	G1
SANITARY SEWER	QL "B"
CITY OF GEORGETOWN	WW1
WATER	QL "B"
CITY OF GEORGETOWN	W1
CITY OF ROUND ROCK (RAW WATER)	W2
TRAFFIC SIGNALS	QL "B"
TXDOT	TS1
OVERHEAD UTILITY	QL "C"/"D"
OH1 - GUS - ELECTRIC	OH
OH2 - GUS - FIBER	
OH3 - OPTIMUM - CTV/FIBER	
OH4 - AT&T - FIBER	
OH5 - FIBERLIGHT - FIBER	
OH6 - MCI - FIBER	
OH7 - FRONTIER - TELE	
OH8 - FRONTIER - FIBER	
OH9 - PEC - ELECTRIC	

GEORGETOWN TEXAS
more than welcome

THE RIOS GROUP
SUBSURFACE UTILITY ENGINEERING
UTILITY COORDINATION
575 ROUND ROCK WEST DRIVE
BUILDING K, SUITE 400
ROUND ROCK, TX 78681

Texas Department of Transportation

SH 29 AUSTIN DISTRICT
GEORGETOWN, TEXAS
COMPLETED
UTILITY RELOCATION
LAYOUTS
(PREFORMED BY OTHERS)

STA. 177+00 TO END

SHEET 6 OF 6

CONT	SECT	JOB	HIGHWAY
0337	01	053	SH 29
DIST	COUNTY		SHEET NO.
AUS	WILLIAMSON		255

DISCLAIMER:
The use of this standard is governed by the "Texas Engineering Practice Act". No warranty of any kind is made by TxDOT for any purpose whatsoever. TxDOT assumes no responsibility for the conversion of this standard to other formats or for incorrect results or damages resulting from its use.

DATE: 12/18/2025
FILE: pw://kh-pw.bentley.com:kh-pw-01/Documents/01 Active Projects/TX-GEO-069284005 - SH 29 Widening/4 - Design/Plan Set/10. Miscellaneous/STANDARDS/epic.dgn

I. STORMWATER POLLUTION PREVENTION-CLEAN WATER ACT SECTION 402

1. ☐ It is not anticipated that any erosion, sedimentation, or environmental control devices will be needed on this project. The Contractor must still implement appropriate practices to prevent pollution from construction activities from reaching waters of the state. If it becomes necessary to implement control devices, payment for that work must be in accordance with Item 506 Article 4.4, "Change in the Work".

2. ☒ The project will disturb less than 1 acre of soil and has EPICs that require the implementation of erosion, sedimentation, or environmental control devices. The SWP3 summary sheet and associated plan information has been developed and included in the plans. Additional documentation must be maintained during construction in accordance with Department policy.

3. ☐ The project will disturb 1 acres or more of soil therefore requires the implementation of erosion, sedimentation, or environmental control devices. The SWP3 summary sheet and associated plan information has been developed and included in the plans. Additional documentation must be maintained during construction in accordance with Department policy and Texas Commission on Environmental Quality Construction General Permit (TXR150000) requirements.

II. WORK IN OR NEAR STREAMS, WATERBODIES AND WETLANDS CLEAN WATER ACT SECTIONS 401 AND 404

1. ☒ No Permit Required

2. ☐ USACE Permit required for filling, dredging, excavating or other work in any water bodies, rivers, creeks, streams, wetlands or wet areas. The Contractor must adhere to all of the terms and conditions associated with the following permit(s):

   ☐ Nationwide Permit 14 - PCN not Required (less than 1/10th acre waters or wetlands affected)

   ☐ Nationwide Permit 14 - PCN Required (1/10 to <1/2 acre, 1/3 in tidal waters)

   ☐ Other Nationwide Permit Required: NWP#

   ☐ Individual Standard Permit Required

The SWP3 describes the BMPs planned to control erosion, sedimentation and post-project TSS.

The following lists the impacted water, its stationing, planned disturbed acreage, and additional notes:

1.
2.
3.
4.
5.
6.
7.
8.
9.

III. CULTURAL RESOURCES

Refer to TxDOT Standard Specifications in the event historical issues or archeological artifacts are found during construction. Upon discovery of archeological artifacts (bones, burnt rock, flint, pottery, etc.) cease work in the immediate area and contact the Engineer immediately.

☐ Additional Required Actions:

1.
2.
3.
4.

IV. VEGETATION RESOURCES

The Contractor must preserve native vegetation to the extent practical. Follow vegetative buffers defined in the SWP3 for work adjacent to water bodies. Contractor must adhere to Construction Specification Requirements Specs 162, 164, 192, 193, 506, 730, 751, 752 in order to comply with requirements for invasive species, beneficial landscaping, and tree/brush removal commitments.

☐ Additional Required Actions:

1.
2.
3.

V. PROTECTED SPECIES AND MIGRATORY BIRDS

The work must not remove active nests from bridges and other structures during nesting season of the birds associated with the nests. If caves or sinkholes are discovered, cease work in the immediate area, and contact the Engineer immediately. Do not disturb or handle bats found under bridges and other structures. Do not harm or kill wildlife that enters the project area, including rattlesnakes. Implement measures to avoid infesting water bodies with zebra mussels, including inspecting equipment prior to placing in water and clean, drain, dry practices.

If any listed species are observed, cease work in the immediate area, do not disturb the species or habitat, and contact the Engineer immediately.

☐ Additional Required Actions:

1.
2.
3.
4.

LIST OF ABBREVIATIONS

BMP: Best Management Practice
CGP: Construction General Permit
DSHS: Texas Department of State Health Services
FHWA: Federal Highway Administration
MBTA: Migratory Bird Treaty Act
MOA: Memorandum of Agreement
MOU: Memorandum of Understanding
MS4: Municipal Separate Stormwater Sewer System
NOI: Notice of Intent
NOT: Notice of Termination
NWP: Nationwide Permit
OHWM: Ordinaty High Water Mark
OSHA: Occupational Safety and Health Administration
PCN: Pre-Construction Notification
PSL: Project Specific Location
SDS: Safety Data Sheet
SPCC: Spill Prevention Control and Countermeasure
SW3P: Stormwater Pollution Prevention Plan
TCEQ: Texas Commission on Environmental Quality
TPDES: Texas Pollutant Discharge Elimination System
TPWD: Texas Parks and Wildlife Department
TxDOT: Texas Department of Transportation
TSS: Total Suspended Solids
USACE: U.S. Army Corps of Engineers
USFWS: U.S. Fish and Wildlife Service

Texas Department of Transportation

Design Division Standard

ENVIRONMENTAL PERMITS, ISSUES AND COMMITMENTS

EPIC

FILE: epic.dgn	DN:	CK: KM	DW: CES	CK:
© TxDOT: October 2025	CONT	SECT	JOB	HIGHWAY
REVISIONS	0337	01	053	SH 29
	DIST	COUNTY		SHEET NO.
	AUS	WILLIAMSON		256

DISCLAIMER:
The use of this standard is governed by the "Texas Engineering Practice Act". No warranty of any kind is made by TxDOT for any purpose whatsoever. TxDOT assumes no responsibility for the conversion of this standard to other formats or for incorrect results or damages resulting from its use.

DATE: 12/18/2025
FILE: pw://kh-pw.bentley.com:kh-pw-01/Documents/01 Active Projects/TX-GEO-069284005 - SH 29 Widening/4 - Design/Plan Set/10. Miscellaneous/STANDARDS/epic.dgn

VI. HAZARDOUS MATERIALS OR CONTAMINATION ISSUES

For all projects the Contractor will comply with the OSHA Hazard Communication Standard (29 CFR 1910.1200) for personnel who will be working with hazardous materials by conducting safety meetings prior to beginning construction and making workers aware of potential hazards in the workplace. Ensure that all workers are provided with personal protective equipment appropriate for any hazardous materials used.

Obtain and keep on-site Safety Data Sheets (SDS) for all hazardous products used on the project, which may include, but are not limited to the following categories: paints, acids, solvents, asphalt products, chemical additives, fuels and concrete curing compounds or additives. Provide protected storage, off bareground and covered, for products which may be hazardous. Maintain product labelling as required by the Act. Pollutant housekeeping is also required in accordance with items listed in Section I of this EPIC sheet.

Maintain an adequate supply of on-site spill response materials, as indicated in the SDS. In the event of a spill, take actions to mitigate the spill as indicated in the MSDS, in accordance with safe work practices, and contact the District Spill Coordinator immediately. The Contractor shall be responsible for the proper containment and cleanup of all product spills.

Responsibility for Hazardous Materials: Except in cases where the generation of hazardous materials are introduced by the Contractor on any work done by the Contractor on State-owned or controlled sites, the Contractor is not the generator of hazardous materials indentified in the ROW as shown in the plans or as discovered during construction.

Contact the Engineer if any of the following are detected:

* Dead or distressed vegetation (not identified as normal)
* Trash piles, drums, canister, barrels, etc.
* Undesirable smells or odors
* Evidence of leaching or seepage of substances

The following list identifies non-asbestos/lead contamination or waste issues (location, contamination/waste type, if a soil and groundwater management plan applies, and any additional notes)

1.

2.

3.

Demolition Activities - Does the project involve the demolition of any bridge class structure (not including buried culverts) for the purpose of replacement or permanent removal?

1. ☒ No - no further action required for demolition activities
2. ☐ Yes - the Contractor must provide the dates for demolition to the Engineer at least 30 days in advance, to allow the Department sufficient time to prepare and submit the pre-demolition notification to the DSHS at least 10 working days prior to the scheduled demolition.

Asbestos Concerns:

1. ☒ The project does not involve any bridge rehabilitation or replacements. No further action required for bridge asbestos concerns.
2. ☐ The project involves bridge rehabilitation or replacements. The asbestos inspection results are negative. No abatement action is required.
3. ☐ The project involves bridge rehabilitation or replacements. The asbestos inspection results are positive and asbestos abatement is required.
   The asbestos is located at the following (structure ID and station):

   Location 1.

   Location 2.

   Location 3.

   For positive asbestos results, the following action will apply:

   ☐ The Department has retained a DSHS licensed asbestos abatement contractor under a separate contract to perform the abatement, provide DSHS abatement notification, and perform asbestos management activities. This work must occur prior to the Contractor commencing any work that might disturb asbestos.

   ☐ The Department has included the work to perform the abatement, provide DSHS abatement notification, and perform asbestos management activities in this contract under Item 6.10 and related Special Provision and Special Specification. The Contractor must perform abatement work prior to commencing any work that might disturb asbestos.

Lead Paint Concerns - The project involves demolition or repair work that could require cutting, torch cutting, welding, or abrasive blasting of painted steel.

1. ☒ No - no further action required for lead paint concerns
2. ☐ Yes - the lead paint inspection results are negative. No action required for lead paint concerns.
3. ☐ Yes - the lead paint inspection results are positive. Lead is at the following locations and concentrations:

   Location (location/structure ID) Concentration (ppm)

   Location 1.

   Location 2.

   Location 3.

For positive lead results, the following action will apply:

☐ The work is under Item 446 (Field Cleaning & Painting Steel), management of hazardous materials is addressed in the specification and additional mitigation is not required.

☐ The lead concentration of the coating is known to be less than 90 ppm (Consumer Product Safety Commission threshold for paint to be designated as lead-containing), additional mitigation is not required.

☐ Mitigation for lead hazards is required in accordance with OSHA. The Contractor must provide mitigation as part of this contract. Mitigation may include stripping back of paint from steel at cut points or other areas where paint will be disturbed. The Contractor may select other OSHA-compliant controls or work practices instead of paint stripping to mitigate lead hazards. Manage painted steel in accordance with Standard Specification Item 6.10, Painted Steel Requirements.

☐ Mitigation for lead hazards is required in accordance with OSHA. The Department will provide lead paint removal. The Contractor must notify the Engineer of locations where paint-disturbing activities will occur at least 90 days prior to the work, to allow sufficient time for the Department to remove the paint. Manage painted steel in accordance with Standard Specification Item 6.10, Painted Steel Requirements.

VII. OTHER ENVIRONMENTAL ISSUES

(includes program areas such as Air, Noise, Edwards Aquifer Protection Program, etc.)

☐ Additional Required Actions:

1.

2.

3.

LIST OF ABBREVIATIONS

BMP: Best Management Practice
CGP: Construction General Permit
DSHS: Texas Department of State Health Services
FHWA: Federal Highway Administration
MBTA: Migratory Bird Treaty Act
MOA: Memorandum of Agreement
MOU: Memorandum of Understanding
MS4: Municipal Separate Stormwater Sewer System
NOI: Notice of Intent
NOT: Notice of Termination
NWP: Nationwide Permit
OHWM: Ordinaty High Water Mark
OSHA: Occupational Safety and Health Administration
PCN: Pre-Construction Notification
PSL: Project Specific Location
SDS: Safety Data Sheet
SPCC: Spill Prevention Control and Countermeasure
SW3P: Stormwater Pollution Prevention Plan
TCEQ: Texas Commission on Environmental Quality
TPDES: Texas Pollutant Discharge Elimination System
TPWD: Texas Parks and Wildlife Department
TxDOT: Texas Department of Transportation
TSS: Total Suspended Solids
USACE: U.S. Army Corps of Engineers
USFWS: U.S. Fish and Wildlife Service

Texas Department of Transportation — Design Division Standard

ENVIRONMENTAL PERMITS, ISSUES AND COMMITMENTS

EPIC

FILE: epic.dgn	DN:	CK: KM	DW: CES	CK:
© TxDOT: October 2025	CONT	SECT	JOB	HIGHWAY
REVISIONS	0337	01	053	SH 29
	DIST	COUNTY		SHEET NO.
	AUS	WILLIAMSON		257

STORMWATER POLLUTION PREVENTION PLAN (SWP3):

This SWP3 has been developed in accordance with the TPDES Construction General Permit TXR150000 (CGP). The Texas Department of Transportation (TxDOT) ensures that project specifications include adequate best management practices (BMPs) for this project.

For all projects with soil disturbing activity and for projects that have Environmental, Permits, Issues, and Commitments (EPICs) dependent on stormwater controls and water quality measures TxDOT will maintain a SWP3 with all pertinent records, correspondence, environmental documents, etc. at the project field office, Area Office, or electronically.

This SWP3 is consistent with requirements specified in applicable stormwater plans and the projects environmental permits, issues, and commitments (EPICs). A copy of the CGP is included in Attachment 2.12 of the SWP3 binder.

1.0 SITE/PROJECT DESCRIPTION

1.1 PROJECT CONTROL SECTION JOB (CSJ):
0337-01-053

1.2 PROJECT LIMITS:
From: 0.161 MI W OF WOLF RANCH PARKWAY

To: 0.075 MI W OF IH-35 SB FR

1.3 PROJECT COORDINATES:
BEGIN: (Lat) 30°37'58.49"N ,(Long) 97°42'13.25"W

END: (Lat) 30°37'59.04"N ,(Long) 97°41'35.87"W

1.4 TOTAL PROJECT AREA (Acres): 4.27

1.5 TOTAL AREA TO BE DISTURBED (Acres): 12.99

1.6 NATURE OF CONSTRUCTION ACTIVITY:
FOR THE CONSTRUCTION OF INTERSECTION IMPROVEMENTS WITH RIGHT AND/OR LEFT TURN LANES.

1.7 MAJOR SOIL TYPES:

Soil Type	Description
GEORGETOWN STONY CLAY LOAM	1 TO 3 PERCENT SLOPES

1.8 PROJECT SPECIFIC LOCATIONS (PSLs):
PSLs must be depicted on the Environmental Layout Sheets in Attachment 1.2 of this SWP3. PSLs may be identified during preconstruction meetings or during the construction process. Please choose from the options below:

☐ PSLs determined during preconstruction meeting
☐ PSLs determined during construction
☒ No PSLs planned for construction

Type	Sheet #s

All off-ROW PSLs required by the Contractor are the Contractor's responsibility. The Contractor shall secure all permits required by local, state, federal laws for off-ROW PSLs. The contractor shall provide diagrams, areas of disturbance, acreage, and BMPs for all off-ROW PSLs within one mile of the project.

1.9 CONSTRUCTION ACTIVITIES:
(Use the following list as a starting point when developing the Construction Activity Schedule and Ceasing Record in Attachment 2.5.)

☒ Mobilization
☒ Install sediment and erosion controls
☒ Blade existing topsoil into windrows, prep ROW, clear and grub
☒ Remove existing pavement
☒ Grading operations, excavation, and embankment
☒ Excavate and prepare subgrade for proposed pavement widening
☐ Remove existing culverts, safety end treatments (SETs)
☐ Remove existing metal beam guard fence (MBGF), bridge rail
☒ Install proposed pavement per plans
☐ Install culverts, culvert extensions, SETs
☐ Install mow strip, MBGF, bridge rail
☒ Place flex base
☒ Rework slopes, grade ditches
☐ Blade windrowed material back across slopes
☒ Revegetation of unpaved areas
☒ Achieve site stabilization and remove sediment and erosion control measures
☐ Other: _____
☐ Other: _____
☐ Other: _____

1.10 POTENTIAL POLLUTANTS AND SOURCES:

☒ Sediment laden stormwater from stormwater conveyance over disturbed area
☒ Fuels, oils, and lubricants from construction vehicles, equipment, and storage
☒ Solvents, paints, adhesives, etc. from various construction activities
☒ Transported soils from offsite vehicle tracking
☒ Construction debris and waste from various construction activities
☒ Contaminated water from excavation or dewatering pump-out water
☒ Sanitary waste from onsite restroom facilities
☒ Trash from various construction activities/receptacles
☒ Long-term stockpiles of material and waste
☒
☐ Other: _____
☐ Other: _____
☐ Other: _____

1.11 RECEIVING WATERS:
Receiving waters must be depicted on the Environmental Layout Sheets in Attachment 1.2 of this SWP3. Include Segment # for receiving waters.

Tributaries	Classified Waterbody

* Add (*) for impaired waterbodies with pollutant in ().

1.12 ROLES AND RESPONSIBILITIES: TxDOT

☒ Development of plans and specifications
☒ Submit Notice of Intent (NOI) to TCEQ (≥5 acres)
☒ Post Construction Site Notice
☒ Submit NOI/CSN to local MS4
☒ Perform SWP3 inspections
☒ Maintain SWP3 records and update to reflect daily operations
☒ Complete and submit Notice of Termination to TCEQ
☒ Maintain SWP3 records for 3 years
☐ Other: _____
☐ Other: _____
☐ Other: _____

1.13 ROLES AND RESPONSIBILITIES: CONTRACTOR

☒ Day To Day Operational Control
☒ Submit Notice of Intent (NOI) to TCEQ (≥5 acres)
☒ Post Construction Site Notice
☒ Submit NOI/CSN to local MS4
☒ Maintain schedule of major construction activities
☒ Install, maintain and modify BMPs
☒ Complete and submit Notice of Termination to TCEQ
☒ Maintain SWP3 records for 3 years
☐ Other: _____
☐ Other: _____
☐ Other: _____

1.14 LOCAL MUNICIPAL SEPARATE STORM SEWER SYSTEM (MS4) OPERATOR COORDINATION:

MS4 Entity

Tyler G. Mitchell
12/18/2025

STATE OF TEXAS
TYLER G. MITCHELL
139240
LICENSED
PROFESSIONAL ENGINEER

STORMWATER POLLUTION PREVENTION PLAN (SWP3)

© 2023

July 2023 Sheet 1 of 2

Texas Department of Transportation

FED. RD. DIV. NO.	PROJECT NO.		SHEET NO.
			258
STATE	STATE DIST.	COUNTY	
TEXAS	AUS	WILLIAMSON	
CONT.	SECT.	JOB	HIGHWAY NO.
0337	01	053	SH 29

STORMWATER POLLUTION PREVENTION PLAN (SWP3):

2.0 BEST MANAGEMENT PRACTICES (BMPs) AND CONTROLS, INSPECTION, AND MAINTENANCE

The Contractor shall be the responsible party for implementing the BMPs described herein and for complying with the SWP3 for control of erosion and sedimentation during day-to-day operations. The Contractor shall implement changes to this SWP3 approved by TxDOT within the times specified in this SWP3 or the CGP.

2.1 EROSION CONTROL AND SOIL STABILIZATION BMPs:

T / P

- X ☐ Protection of Existing Vegetation
- ☐ ☐ Vegetated Buffer Zones
- X ☐ Soil Retention Blankets
- ☐ ☐ Geotextiles
- ☐ ☐ Mulching/ Hydromulching
- ☐ ☐ Soil Surface Treatments
- X ☐ Temporary Seeding
- ☐ X Permanent Planting, Sodding or Seeding
- X ☐ Biodegradable Erosion Control Logs
- ☐ ☐ Rock Filter Dams/ Rock Check Dams
- ☐ ☐ Vertical Tracking
- ☐ ☐ Interceptor Swale
- ☐ X Riprap
- ☐ ☐ Diversion Dike
- ☐ ☐ Temporary Pipe Slope Drain
- ☐ ☐ Embankment for Erosion Control
- ☐ ☐ Paved Flumes
- ☐ ☐ Other: _____
- ☐ ☐ Other: _____
- ☐ ☐ Other: _____
- ☐ ☐ Other: _____

2.2 SEDIMENT CONTROL BMPs:

T / P

- X ☐ Biodegradable Erosion Control Logs
- ☐ ☐ Dewatering Controls
- X ☐ Inlet Protection
- ☐ ☐ Rock Filter Dams/ Rock Check Dams
- ☐ ☐ Sandbag Berms
- X ☐ Sediment Control Fence
- X ☐ Stabilized Construction Exit
- ☐ ☐ Floating Turbidity Barrier
- ☐ ☐ Vegetated Buffer Zones
- ☐ ☐ Vegetated Filter Strips
- ☐ ☐ Other: _____
- ☐ ☐ Other: _____
- ☐ ☐ Other: _____
- ☐ ☐ Other: _____

Refer to the Environmental Layout Sheets/ SWP3 Layout Sheets located in Attachment 1.2 of this SWP3

Sediment control BMPs requiring design capacity calculations (See SWP3 Attachment 1.3.):

T / P

- ☐ ☐ Sediment Trap
  - ☐ Calculated volume runoff from 2-year, 24-hour storm for each acre of disturbed area
  - ☐ 3,600 cubic feet of storage per acre drained
- ☐ ☐ Sedimentation Basin
  - X Not required (<10 acres disturbed)
  - ☐ Required (>10 acres) and implemented.
    - ☐ Calculated volume runoff from 2-year, 24-hour storm for each acre of disturbed area
    - ☐ 3,600 cubic feet of storage per acre drained
  - ☐ Required (>10 acres), but not feasible due to:
    - ☐ Available area/Site geometry
    - ☐ Site slope/Drainage patterns
    - ☐ Site soils/Geotechnical factors
    - ☐ Public safety
    - ☐ Other: _____

2.3 PERMANENT CONTROLS:

(Coordinate post-construction BMPs with appropriate TxDOT maintenance sections.)

BMPs To Be Left In Place Post Construction:

Type	Stationing	
	From	To

Refer to the Environmental Layout Sheets/ SWP3 Layout Sheets located in Attachment 1.2 of this SWP3

2.4 OFFSITE VEHICLE TRACKING CONTROLS:

- X Excess dirt/mud on road removed daily
- ☐ Haul roads dampened for dust control
- X Loaded haul trucks to be covered with tarpaulin
- X Stabilized construction exit
- ☐ Daily street sweeping
- ☐ Other: _____
- ☐ Other: _____
- ☐ Other: _____
- ☐ Other: _____

2.5 POLLUTION PREVENTION MEASURES:

- ☐ Chemical Management
- ☐ Concrete and Materials Waste Management
- ☐ Debris and Trash Management
- ☐ Dust Control
- ☐ Sanitary Facilities
- ☐ Other: _____
- ☐ Other: _____
- ☐ Other: _____
- ☐ Other: _____
- ☐ Other: _____

2.6 VEGETATED BUFFER ZONES:

Natural vegetated buffers shall be maintained as feasible to protect adjacent surface waters. If vegetated natural buffer zones are not feasible due to site geometry, the appropriate additional sediment control measures have been incorporated into this SWP3.

Type	Stationing	
	From	To

Refer to the Environmental Layout Sheets/ SWP3 Layout Sheets located in Attachment 1.2 of this SWP3

2.7 ALLOWABLE NON-STORMWATER DISCHARGES:

- X Fire hydrant flushings
- X Irrigation drainage
- X Pavement washwater (where spills or leaks have not occurred, and detergents are not used)
- X Potable water sources
- X Springs
- X Uncontaminated groundwater
- X Water used to wash vehicles or control dust
- X Other allowable non-stormwater discharges as allowed by TPDES GP TXR150000.

2.8 DEWATERING:

Dewatering discharges of accumulated stormwater, groundwater, and surface water including discharges from dewatering of trenches, excavations, foundations, vaults, and other points of accumulation are prohibited unless managed by appropriate controls to prevent and minimize the offsite discharge of sediment and other pollutants.

2.9 INSPECTIONS:

All disturbed areas and erosion and sediment control devices shall be inspected at least once every seven (7) days. Inspections shall be performed by TxDOT as indicated on the Field Inspection and Maintenance Report Form 2118 and retained in Attachment 2.5 of this SWP3.

When dewatering activities are present, a daily inspection will be conducted once per day during those activities and documented in accordance with CGP and TxDOT requirements.

2.10 MAINTENANCE:

Control measures shall be properly installed according to specifications. If it is determined that a BMP or control measure is not operating effectively, maintenance must be accomplished as soon as possible and before the next anticipated rain event, but in no case later than 7 calendar days after being able to access the site. Maintenance shall be performed by the Contractor as indicated on the Field Inspection and Maintenance Report Form 2118 and retained in Attachment 2.5 of this SWP3.

12/18/2025

STATE OF TEXAS
TYLER G. MITCHELL
139240
LICENSED PROFESSIONAL ENGINEER

STORMWATER POLLUTION PREVENTION PLAN (SWP3)

© 2023

July 2023 Sheet 2 of 2

Texas Department of Transportation

FED. RD. DIV. NO.	PROJECT NO.		SHEET NO.
			259
STATE	STATE DIST.	COUNTY	
TEXAS	AUS	WILLIAMSON	
CONT.	SECT.	JOB	HIGHWAY NO.
0337	01	053	SH 29

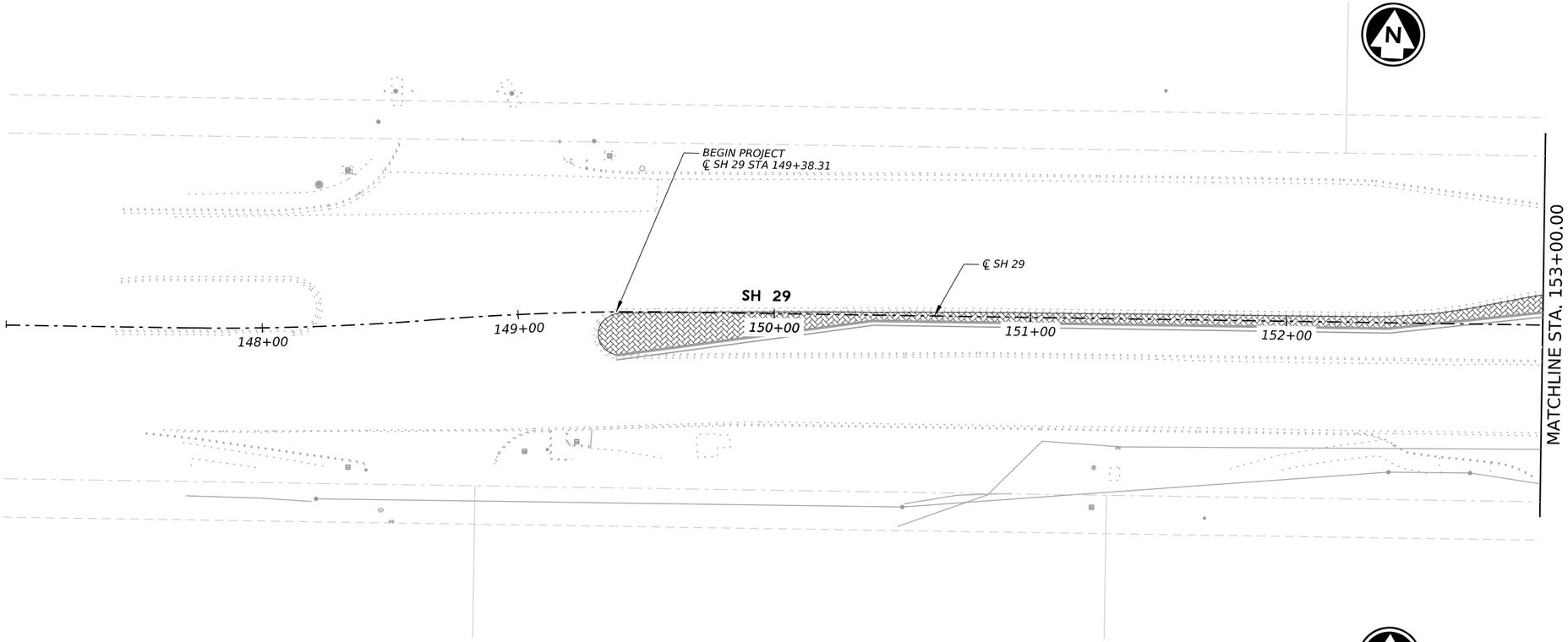

LEGEND

ECL — EROSION CONTROL LOG

TOP SOIL, BLOCK SODDING

HORIZ. 0' 25' 50'

NOTES:

1. CONTRACTOR SHALL INSTALL EROSION CONTROL LOGS FOR EACH TCP PHASE AS INDICATED ON THE PLANS AND REMOVE OR ADJUST AT THE BEGINNING OF EACH PHASE.
2. CONTRACTOR TO RESTORE THE SURROUNDING LANSCAPING TO EXISITING CONDITIONS.
3. CONTRACTOR TO PROTECT TREES LOCATED WITHIN TEMPORARY CONSTRUCTION EASEMENTS.

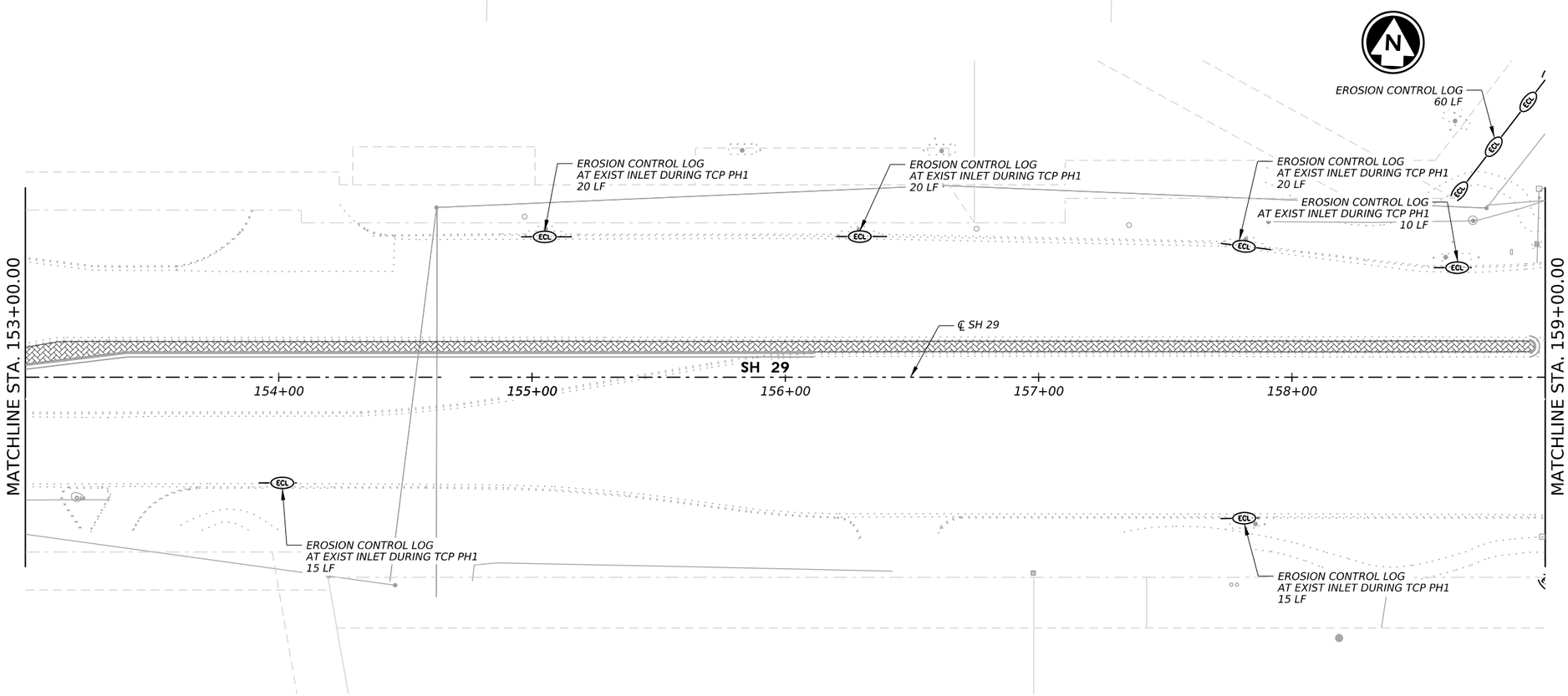

12/18/2025

STATE OF TEXAS
TYLER G. MITCHELL
139240
LICENSED
PROFESSIONAL ENGINEER

GEORGETOWN TEXAS
more than welcome

Kimley»Horn F-928

Texas Department of Transportation

SH 29

EROSION CONTROL PLAN
BEGIN TO STA 159+00

SHEET 1 OF 4

CONT	SECT	JOB	HIGHWAY
0337	01	053	SH 29
DIST		COUNTY	SHEET NO.
AUS		WILLIAMSON	260

DATE: 12/18/2025 8:48:06 PM
FILE: p:\kh-pw-01\Documents\01 Active Projects\TX-GEO-069284005 - SH 29 Widening\4 - Design\Plan Set\10. Miscellaneous\SH29_K_SW3P_01.dgn

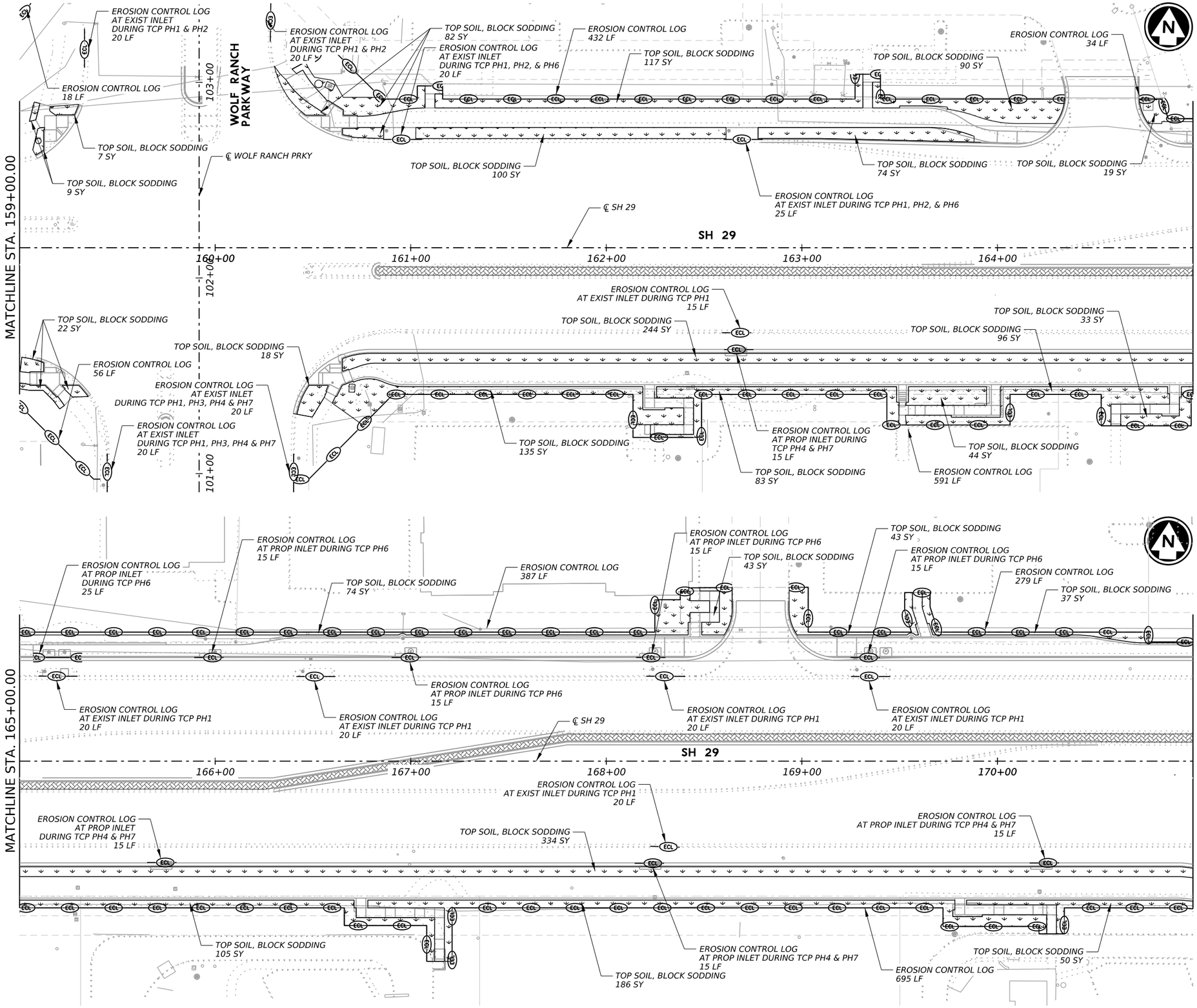

LEGEND

- EROSION CONTROL LOG
- TOP SOIL, BLOCK SODDING

HORIZ. 0' 25' 50'

NOTES:

1. CONTRACTOR SHALL INSTALL EROSION CONTROL LOGS FOR EACH TCP PHASE AS INDICATED ON THE PLANS AND REMOVE OR ADJUST AT THE BEGINNING OF EACH PHASE.
2. CONTRACTOR TO RESTORE THE SURROUNDING LANSCAPING TO EXISITING CONDITIONS.
3. CONTRACTOR TO PROTECT TREES LOCATED WITHIN TEMPORARY CONSTRUCTION EASEMENTS.

1/21/2026

STATE OF TEXAS
TYLER G. MITCHELL
139240
LICENSED PROFESSIONAL ENGINEER

GEORGETOWN TEXAS
more than welcome

Kimley»Horn F-928

Texas Department of Transportation

SH 29

EROSION CONTROL PLAN
STA 159+00 TO STA 171+00

SHEET 2 OF 4

CONT	SECT	JOB	HIGHWAY
0337	01	053	SH 29
DIST		COUNTY	SHEET NO.
AUS		WILLIAMSON	261

DATE: 1/21/2026 10:04:58 AM
FILE: pw://kh-pw.bentley.com:kh-pw-01/Documents/01 Active Projects/TX-GEO-069284005 - SH 29 Widening/4 - Design/Plan Set/10. Miscellaneous/SH29_K_SW3P_02.dgn

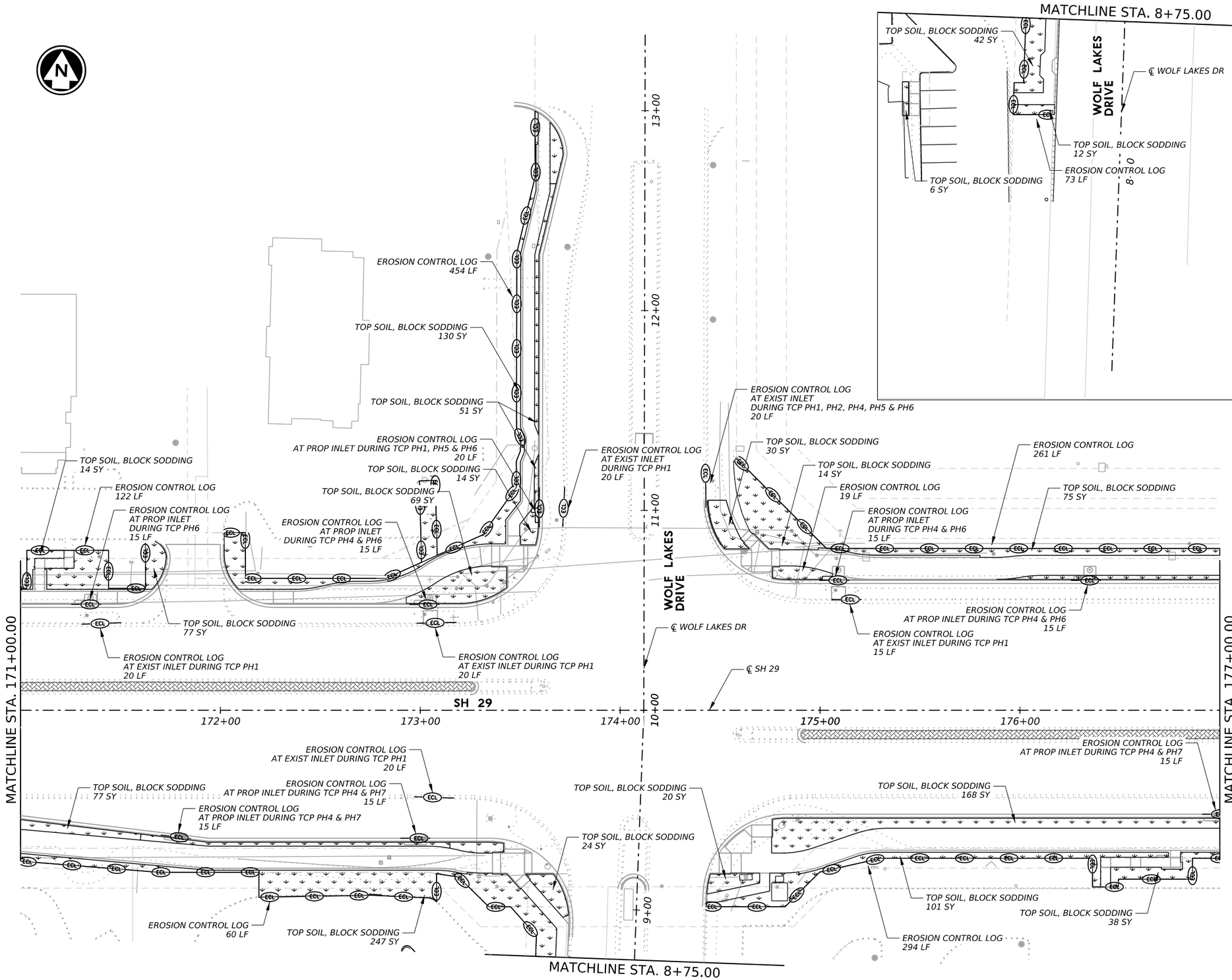

LEGEND

- EROSION CONTROL LOG
- TOP SOIL, BLOCK SODDING

HORIZ. 0' 25' 50'

NOTES:

1. CONTRACTOR SHALL INSTALL EROSION CONTROL LOGS FOR EACH TCP PHASE AS INDICATED ON THE PLANS AND REMOVE OR ADJUST AT THE BEGINNING OF EACH PHASE.
2. CONTRACTOR TO RESTORE THE SURROUNDING LANSCAPING TO EXISITING CONDITIONS.
3. CONTRACTOR TO PROTECT TREES LOCATED WITHIN TEMPORARY CONSTRUCTION EASEMENTS.

1/21/2026

STATE OF TEXAS
TYLER G. MITCHELL
139240
LICENSED
PROFESSIONAL ENGINEER

GEORGETOWN TEXAS
more than welcome

Kimley»Horn F-928

Texas Department of Transportation

SH 29

EROSION CONTROL PLAN
STA 171+00 TO STA 177+00

SHEET 3 OF 4

CONT	SECT	JOB	HIGHWAY
0337	01	053	SH 29
DIST		COUNTY	SHEET NO.
AUS		WILLIAMSON	262

DATE: 1/21/2026 10:06:24 AM
FILE: pw:\\kh-pw-01.bentley.com:kh-pw-01/Documents/01 Active Projects/TX-GEO-069284005 - SH 29 Widening/4 - Design/Plan Set/10. Miscellaneous/SH29_K_SW3P_03.dgn

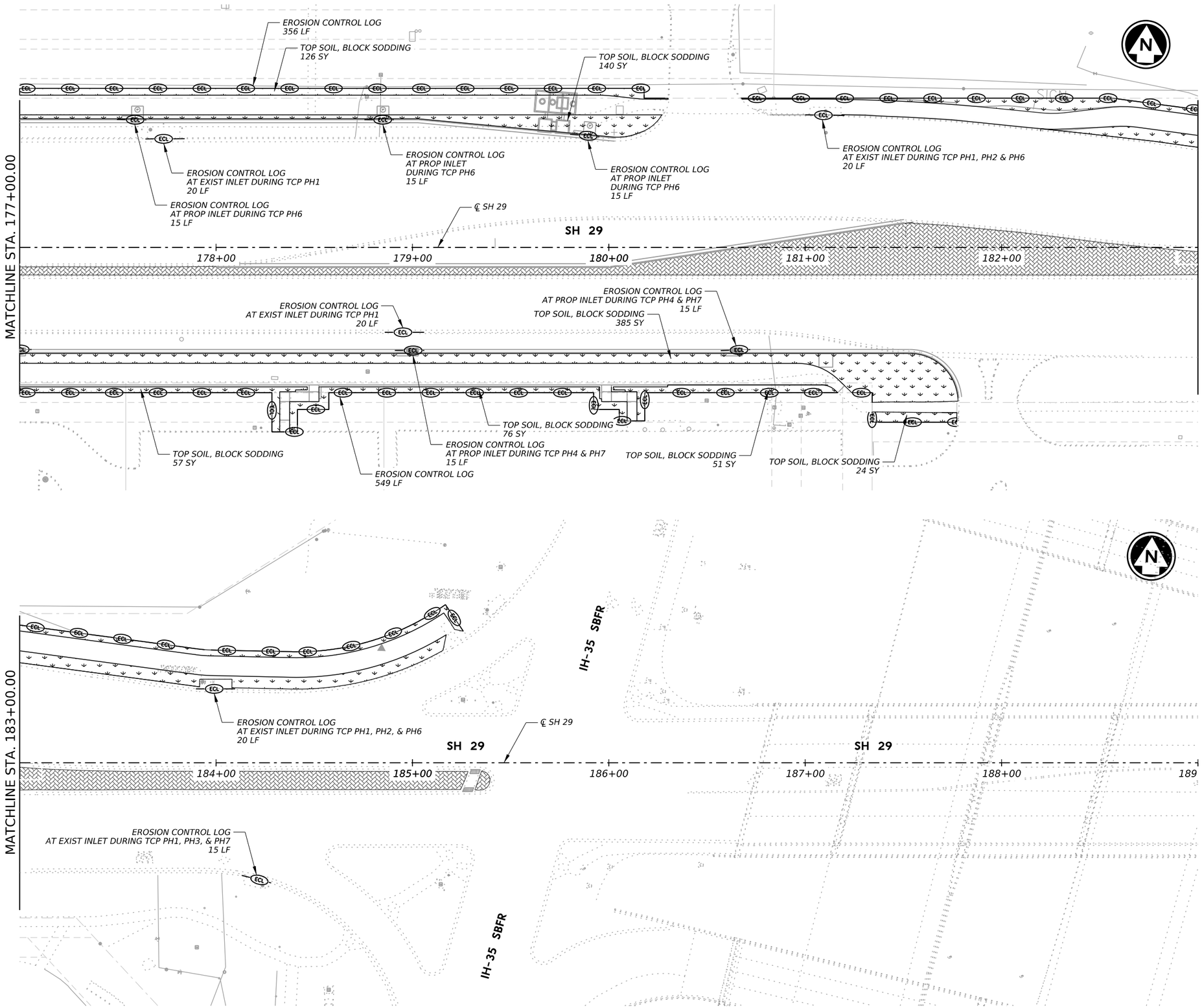

LEGEND

EROSION CONTROL LOG

TOP SOIL, BLOCK SODDING

HORIZ. 0' 25' 50'

NOTES:

1. CONTRACTOR SHALL INSTALL EROSION CONTROL LOGS FOR EACH TCP PHASE AS INDICATED ON THE PLANS AND REMOVE OR ADJUST AT THE BEGINNING OF EACH PHASE.
2. CONTRACTOR TO RESTORE THE SURROUNDING LANSCAPING TO EXISITING CONDITIONS.
3. CONTRACTOR TO PROTECT TREES LOCATED WITHIN TEMPORARY CONSTRUCTION EASEMENTS.

TYLER G. MITCHELL
139240
LICENSED
PROFESSIONAL ENGINEER
STATE OF TEXAS
1/15/2026

GEORGETOWN
TEXAS
more than welcome

Kimley»Horn
F-928

Texas Department of Transportation

SH 29

EROSION CONTROL PLAN
STA 177+00 TO END

SHEET 4 OF 4

CONT	SECT	JOB	HIGHWAY
0337	01	053	SH 29
DIST	COUNTY		SHEET NO.
AUS	WILLIAMSON		263

DATE: 1/15/2026 8:46:04 AM
FILE: pw://kimley-horn.com:kh-pw-01/Documents/01 Active Projects/TX-GEO-069284005 - SH 29 Widening/4 - Design/Plan Set/10. Miscellaneous/SH29_K_SW3P_04.dgn

DW: CK: DW: CK:

DISCLAIMER:
The use of this standard is governed by the "Texas Engineering Practice Act". No warranty of any kind is made by TxDOT for any purpose whatsoever. TxDOT assumes no responsibility for the conversion of this standard to other formats or for incorrect results or damages resulting from its use.

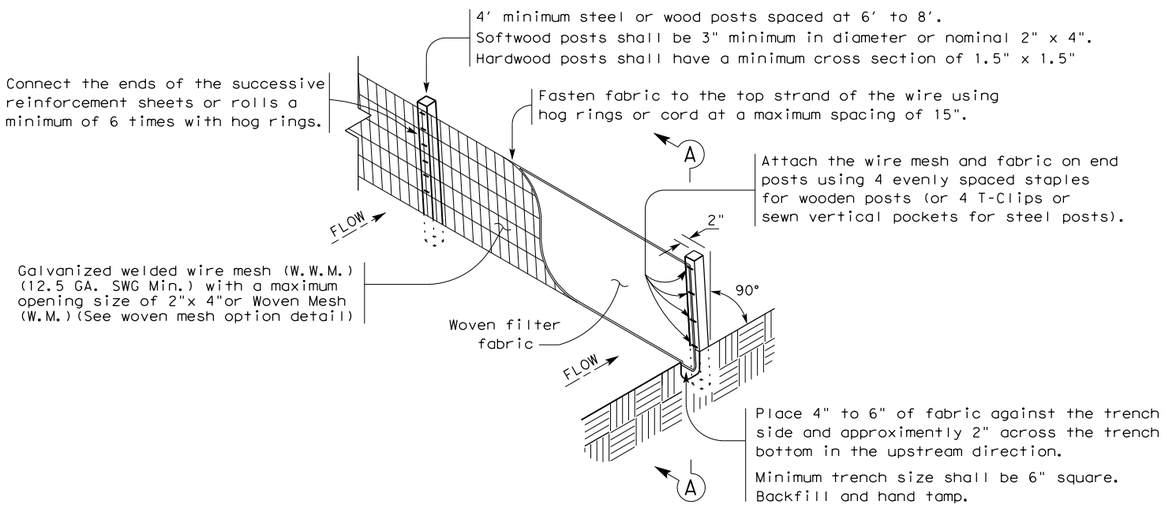

TEMPORARY SEDIMENT CONTROL FENCE

SCF

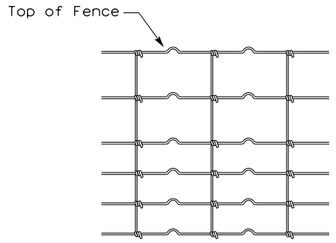

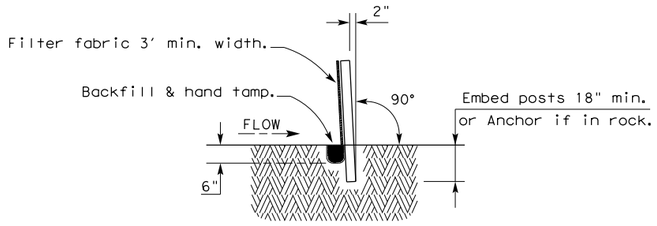

SECTION A-A

HINGE JOINT KNOT WOVEN MESH (OPTION) DETAIL

Galvanized hinge joint knot woven mesh (12.5 GA.SWG Min.) requires a minimum of five horizontal wires spaced at a maximum of 12 inches apart and all vertical wires spaced at a maximum of 12 inches apart.

SEDIMENT CONTROL FENCE USAGE GUIDELINES

A sediment control fence may be constructed near the downstream perimeter of a disturbed area along a contour to intercept sediment from overland runoff. A 2 year storm frequency may be used to calculate the flow rate to be filtered.

Sediment control fence should be sized to filter a maximum flow through rate of 100 GPM/FT^2. Sediment control fence is not recommended to control erosion from a drainage area larger than 2 acres.

LEGEND

Sediment Control Fence

SCF

GENERAL NOTES

1. Vertical tracking is required on projects where soil distributing activities have occurred unless otherwise approved.
2. Perform vertical tracking on slopes to temporarily stabilize soil.
3. Provide equipment with a track undercarriage capable of producing linear soil impressions measuring a minimum of 12" in length by 2" to 4" in width by 1/2" to 2" in depth.
4. Do not exceed 12" between track impressions.
5. Install continous linear track impressions where the minimum 12" length impressions are perpendicular to the slope or direction of water flow.

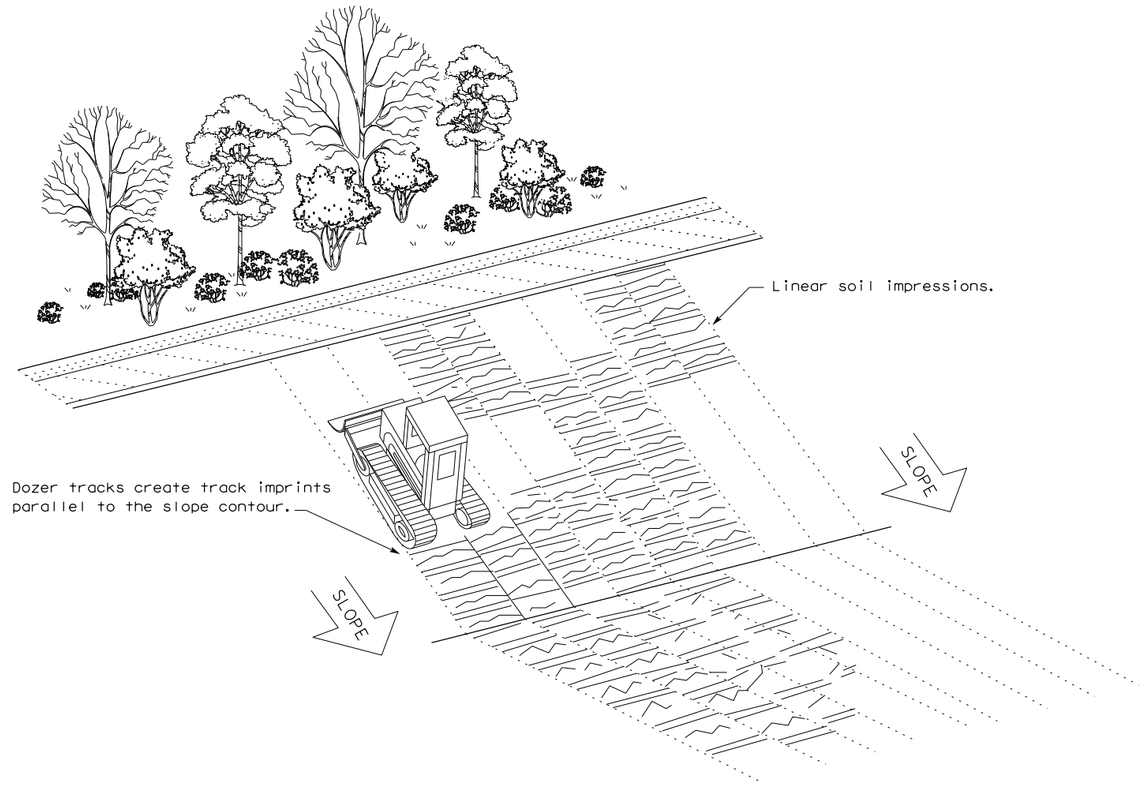

VERTICAL TRACKING

Texas Department of Transportation

Design Division Standard

TEMPORARY EROSION, SEDIMENT AND WATER POLLUTION CONTROL MEASURES

FENCE & VERTICAL TRACKING

EC(1)-16

FILE: ec116	DN: TxDOT		CK: KM		DW: VP	DN/CK: LS
© TxDOT: JULY 2016	CONT	SECT	JOB		HIGHWAY	
REVISIONS	0337	01	053		SH 29	
	DIST	COUNTY			SHEET NO.	
	AUS	WILLIAMSON			264	

DATE
FILE

DISCLAIMER:
The use of this standard is governed by the "Texas Engineering Practice Act". No warranty of any kind is made by TxDOT for any purpose whatsoever. TxDOT assumes no responsibility for the conversion of this standard to other formats or for incorrect results or damages resulting from its use.

DATE: 12/18/2025
FILE: pw://kh-pw.bentley.com:kh-pw-01/Documents/01 Active Projects/TX-GEO-069284005 - SH 29 Widening/4 - Design/Plan Set/10. Miscellaneous/STANDARDS/ec316.dgn

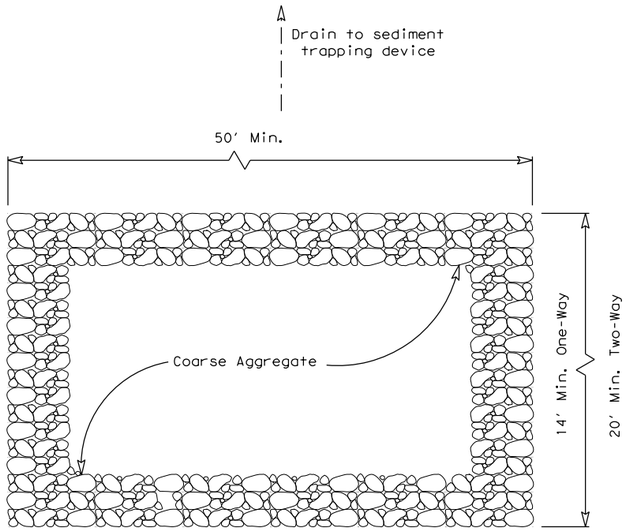

PLAN VIEW

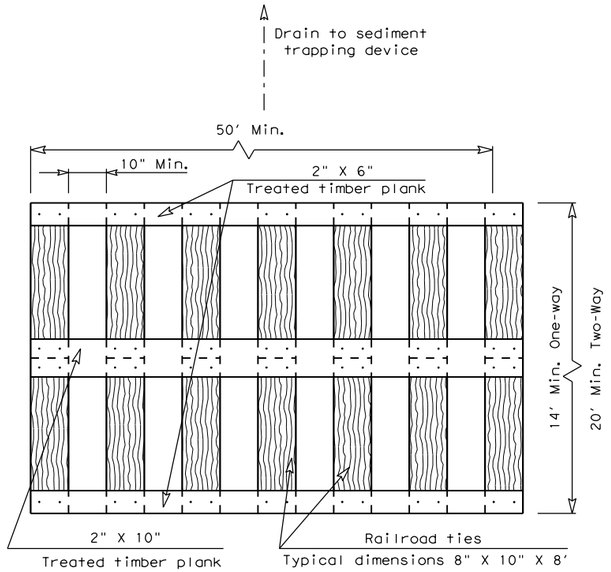

PLAN VIEW

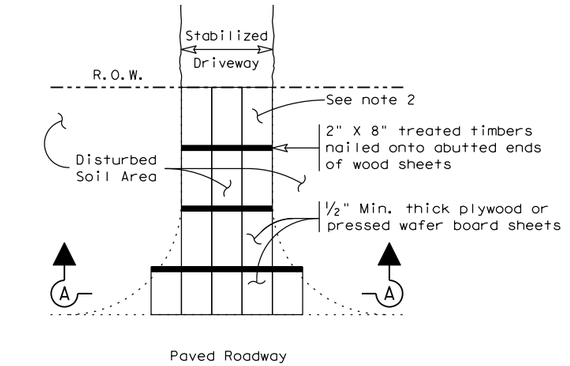

PLAN VIEW

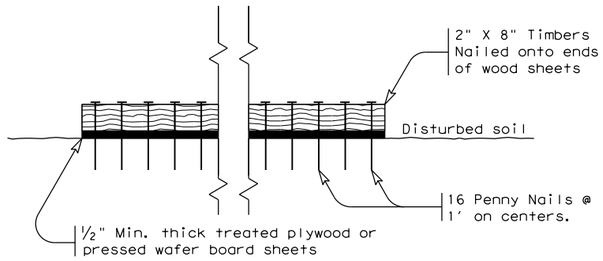

SECTION A-A

CONSTRUCTION EXIT (TYPE 3)

SHORT TERM

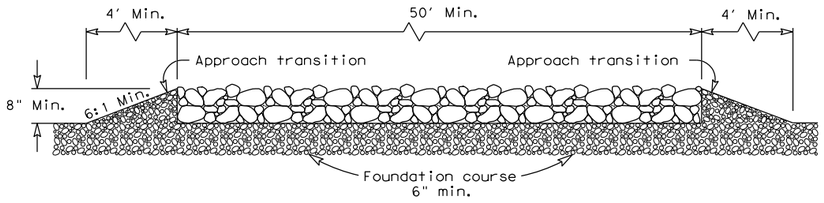

ELEVATION VIEW

CONSTRUCTION EXIT (TYPE 1)

ROCK CONSTRUCTION (LONG TERM)

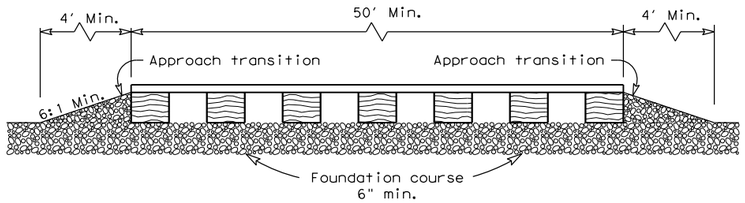

ELEVATION VIEW

CONSTRUCTION EXIT (TYPE 2)

TIMBER CONSTRUCTION (LONG TERM)

GENERAL NOTES (TYPE 1)

1. The length of the type 1 construction exit shall be as indicated on the plans, but not less than 50'.
2. The coarse aggregate should be open graded with a size of 4" to 8".
3. The approach transitions should be no steeper than 6:1 and constructed as directed by the Engineer.
4. The construction exit foundation course shall be flexible base, bituminous concrete, portland cement concrete or other materialas approved by the Engineer.
5. The construction exit shall be graded to allow drainage to a sediment trapping device.
6. The guidelines shown hereon are suggestions only and may be modified by the Engineer.
7. Construct exits with a width of at least 14 ft. for one-way and 20 ft. for two-way traffic for the full width of the exit, or as directed by the engineer.

GENERAL NOTES (TYPE 2)

1. The length of the type 2 construction exit shall be as indicated on the plans, but not less than 50'.
2. The treated timber planks shall be attached to the railroad ties with ½"x 6" min. lag bolts. Other fasteners may be used as approved by the Engineer.
3. The treated timber planks shall be #2 grade min., and should be free from large and loose knots.
4. The approach transitions shall be no steeper than 6:1 and constructed as directed by the Engineer.
5. The construction exit foundation course shall be flexible base, bituminous concrete, portland cement concrete or other material as approved by the Engineer.
6. The construction exit should be graded to allow drainage to a sediment trapping device.
7. The guidelines shown hereon are suggestions only and may be modified by the Engineer.
8. Construct exits with a width of at least 14 ft. for one-way and 20 ft. for two-way traffic for the full width of the exit, or as directed by the engineer.

GENERAL NOTES (TYPE 3)

1. The length of the type 3 construction exit shall be as shown on the plans, or as directed by the Engineer.
2. The type 3 construction exit may be constructed from open graded crushed stone with a size of two to four inches spread a min. of 4" thick to the limits shown on the plans.
3. The treated timber planks shall be #2 grade min., and should be free from large and loose knots.
4. The guidelines shown hereon are suggestions only and may be modified by the Engineer.

Texas Department of Transportation

Design Division Standard

TEMPORARY EROSION, SEDIMENT AND WATER POLLUTION CONTROL MEASURES

CONSTRUCTION EXITS

EC(3)-16

FILE: ec316	DN: TxDOT		CK: KM	DW: VP	DN/CK: LS
©TxDOT: JULY 2016	CONT	SECT	JOB		HIGHWAY
REVISIONS	0337	01	053		SH 29
	DIST	COUNTY			SHEET NO.
	AUS	WILLIAMSON			265

DISCLAIMER:
The use of this standard is governed by the "Texas Engineering Practice Act". No warranty of any kind is made by TxDOT for any purpose whatsoever. TxDOT assumes no responsibility for the conversion of this standard to other formats or for incorrect results or damages resulting from its use.

DATE:
FILE:

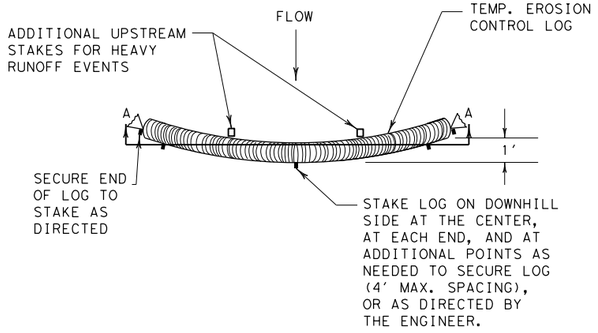

PLAN VIEW

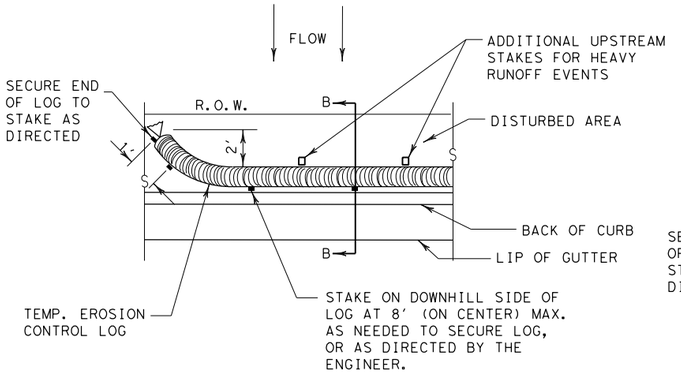

PLAN VIEW

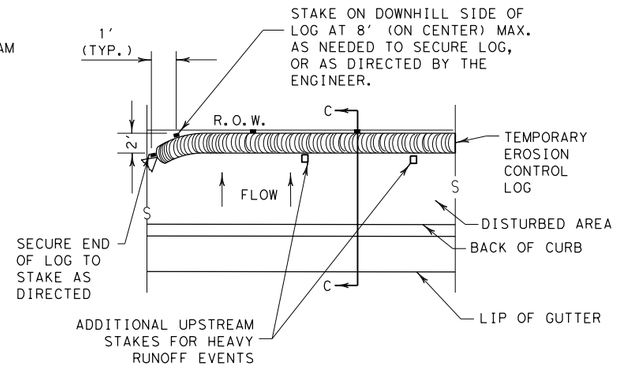

PLAN VIEW

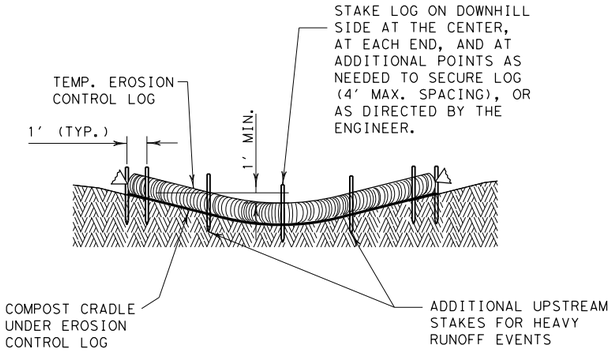

SECTION A-A

EROSION CONTROL LOG DAM

CL-D

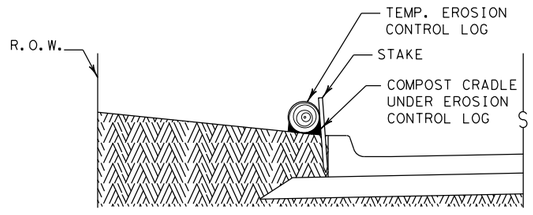

SECTION B-B

EROSION CONTROL LOG AT BACK OF CURB

CL-BOC

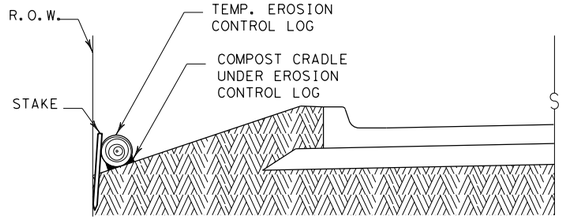

SECTION C-C

EROSION CONTROL LOG AT EDGE OF RIGHT-OF-WAY

CL-ROW

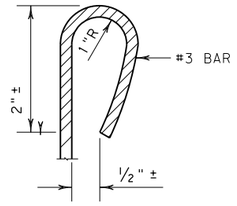

REBAR STAKE DETAIL

LEGEND

- CL-D — EROSION CONTROL LOG DAM
- CL-BOC — EROSION CONTROL LOG AT BACK OF CURB
- CL-ROW — EROSION CONTROL LOG AT EDGE OF RIGHT-OF-WAY
- CL-SST — EROSION CONTROL LOGS ON SLOPES STAKE AND TRENCHING ANCHORING
- CL-SSL — EROSION CONTROL LOGS ON SLOPES STAKE AND LASHING ANCHORING
- CL-DI — EROSION CONTROL LOG AT DROP INLET
- CL-CI — EROSION CONTROL LOG AT CURB INLET
- CL-GI — EROSION CONTROL LOG AT CURB & GRATE INLET

GENERAL NOTES:

1. EROSION CONTROL LOGS SHALL BE INSTALLED IN ACCORDANCE WITH MANFACTURER'S RECOMMENDATIONS, OR AS DIRECTED BY THE ENGINEER.
2. LENGTHS OF EROSION CONTROL LOGS SHALL BE IN ACCORDANCE WITH MANUFACTURER'S RECOMMENDATIONS AND AS REQUIRED FOR THE PURPOSE INTENDED.
3. UNLESS OTHERWISE DIRECTED, USE BIODEGRADABLE OR PHOTODEGRADABLE CONTAINMENT MESH ONLY WHERE LOG WILL REMAIN IN PLACE AS PART OF A VEGETATIVE SYSTEM. FOR TEMPORARY INSTALLATIONS, USE RECYCLABLE CONTAINMENT MESH.
4. FILL LOGS WITH SUFFICIENT FILTER MATERIAL TO ACHIEVE THE MINIMUM COMPACTED DIAMETER SPECIFIED IN THE PLANS WITHOUT EXCESSIVE DEFORMATION.
5. STAKES SHALL BE 2" X 2" WOOD OR #3 REBAR, 2'-4' LONG, EMBEDDED SUCH THAT 2" PROTRUDES ABOVE LOG, OR AS DIRECTED BY THE ENGINEER.
6. DO NOT PLACE STAKES THROUGH CONTAINMENT MESH.
7. COMPOST CRADLE MATERIAL IS INCIDENTAL & WILL NOT BE PAID FOR SEPARATELY.
8. SANDBAGS USED AS ANCHORS SHALL BE PLACED ON TOP OF LOGS & SHALL BE OF SUFFICIENT SIZE TO HOLD LOGS IN PLACE.
9. TURN THE ENDS OF EACH ROW OF LOGS UPSLOPE TO PREVENT RUNOFF FROM FLOWING AROUND THE LOG.
10. FOR HEAVY RUNOFF EVENTS, ADDITIONAL UPSTREAM STAKES MAY BE NECESSARY TO KEEP LOG FROM FOLDING IN ON ITSELF.

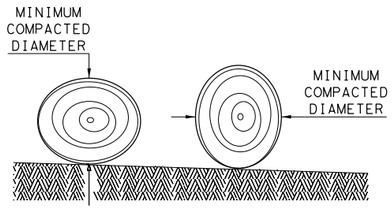

DIAMETER MEASUREMENTS OF EROSION CONTROL LOGS SPECIFIED IN PLANS

SEDIMENT BASIN & TRAP USAGE GUIDELINES

An erosion control log sediment trap may be used to filter sediment out of runoff draining from an unstabilized area.

Log Traps: The drainage area for a sediment trap should not exceed 5 acres. The trap capacity should be 1800 CF/Acre (0.5" over the drainage area).

Control logs should be placed in the following locations:

1. Within drainage ditches spaced as needed or min. 500' on center
2. Immediately preceding ditch inlets or drain inlets
3. Just before the drainage enters a water course
4. Just before the drainage leaves the right of way
5. Just before the drainage leaves the construction limits where drainage flows away from the project.

The logs should be cleaned when the sediment has accumulated to a depth of 1/2 the log diameter.

Cleaning and removal of accumulated sediment deposits is incidental and will not be paid for separately.

Texas Department of Transportation

Design Division Standard

TEMPORARY EROSION, SEDIMENT AND WATER POLLUTION CONTROL MEASURES

EROSION CONTROL LOG

EC(9)-16

FILE: ec916		DN: TxDOT		CK: KM		DW: LS/PT	CK: LS
© TxDOT: JULY 2016		CONT	SECT	JOB		HIGHWAY	
REVISIONS		0337	01	053		SH 29	
		DIST		COUNTY			SHEET NO.
		AUS		WILLIAMSON			266

DISCLAIMER:
The use of this standard is governed by the "Texas Engineering Practice Act". No warranty of any kind is made by TxDOT for any purpose whatsoever. TxDOT assumes no responsibility for the conversion of this standard to other formats or for incorrect results or damages resulting from its use.

DATE:
FILE:

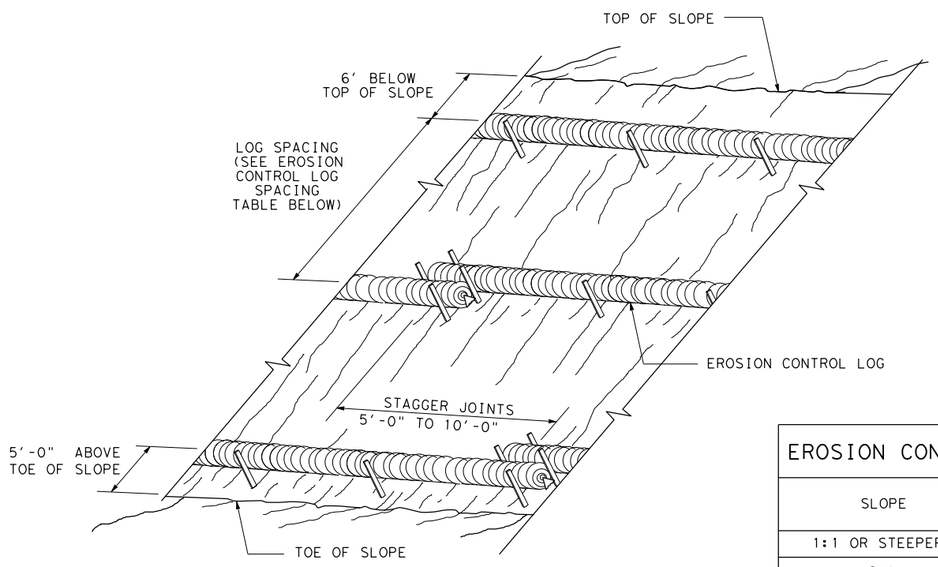

EROSION CONTROL LOGS ON SLOPES
STAKE AND TRENCHING ANCHORING

CL-SST

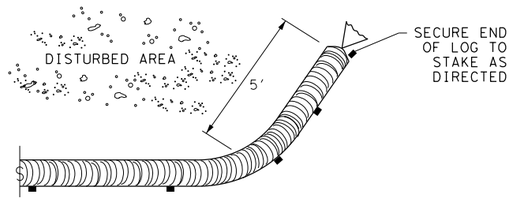

END SECTION RAP DETAIL

EROSION CONTROL LOG SPACING TABLE				
SLOPE	LOG DIAMETER			
	6"	8"	12"	18"
1:1 OR STEEPER	5'	10'	15'	20'
2:1	10'	20'	30'	40'
3:1	15'	30'	45'	60'
4:1 OR FLATTER	20'	40'	60'	80'

* ADJUSTMENTS CAN BE MADE FOR SOIL TYPE:
SOFT, LOAMY SOILS-ADJUST ROWS CLOSER TOGETHER;
HARD, ROCKY SOILS- ADJUST ROWS FARTHER APART

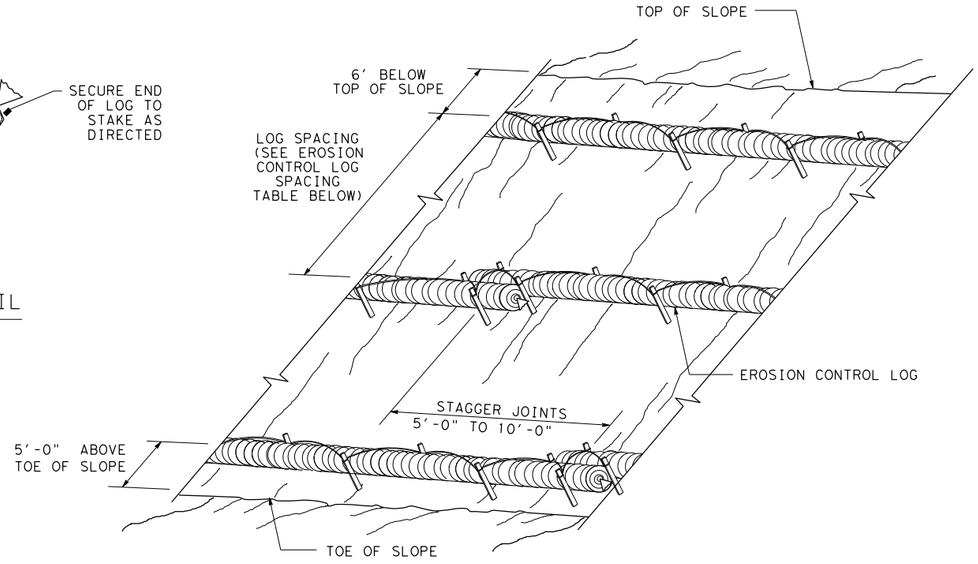

EROSION CONTROL LOGS ON SLOPES
STAKE AND LASHING ANCHORING

CL-SSL

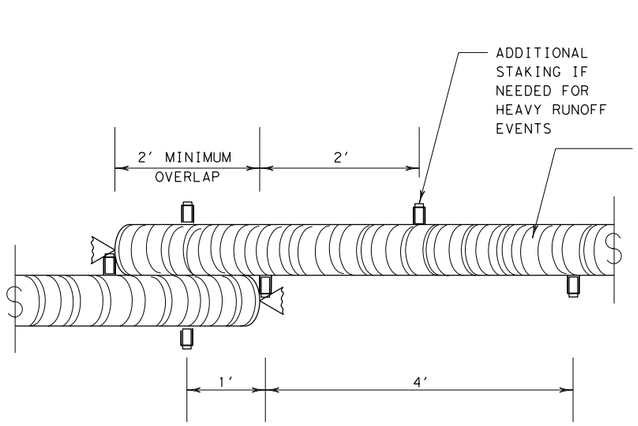

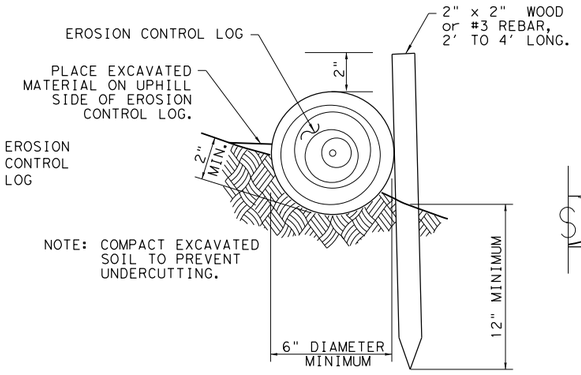

STAKE AND TRENCHING ANCHORING DETAIL

CL-SST

TRENCH DEPTH TABLE	
LOG DIAMETER	DEPTH
6"	2"
8"	3"
12"	4"
18"	5"

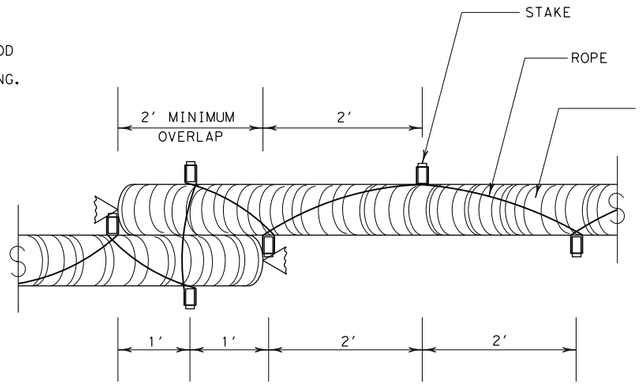

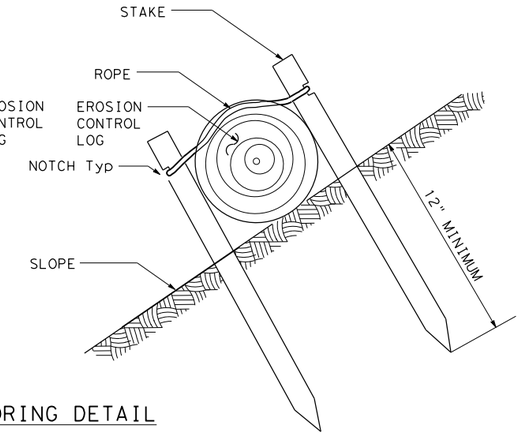

STAKE AND LASHING ANCHORING DETAIL

CL-SSL

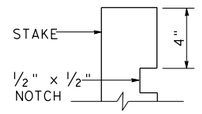

STAKE NOTCH DETAIL

SHEET 2 OF 3

Texas Department of Transportation

Design Division Standard

TEMPORARY EROSION, SEDIMENT AND WATER POLLUTION CONTROL MEASURES

EROSION CONTROL LOG

EC(9)-16

FILE: ec116	DN: TxDOT		CK: KM		DW: LS/PT	CK: LS
© TxDOT: JULY 2016	CONT	SECT	JOB		HIGHWAY	
REVISIONS	0337	01	053		SH 29	
	DIST	COUNTY			SHEET NO.	
	AUS	WILLIAMSON			267	

DISCLAIMER:
The use of this standard is governed by the "Texas Engineering Practice Act". No warranty of any kind is made by TxDOT for any purpose whatsoever. TxDOT assumes no responsibility for the conversion of this standard to other formats or for incorrect results or damages resulting from its use.

DATE:
FILE:

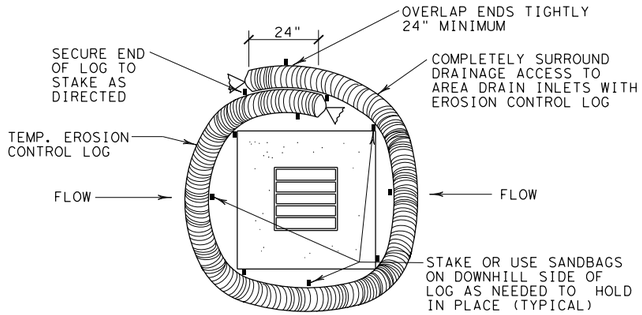

EROSION CONTROL LOG AT DROP INLET

CL-DI

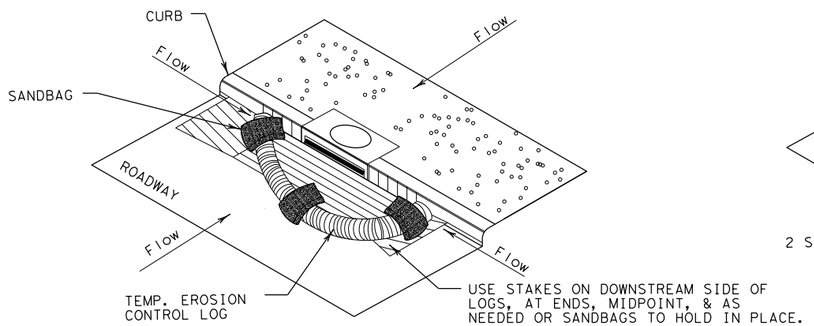

EROSION CONTROL LOG AT CURB INLET

CL-CI

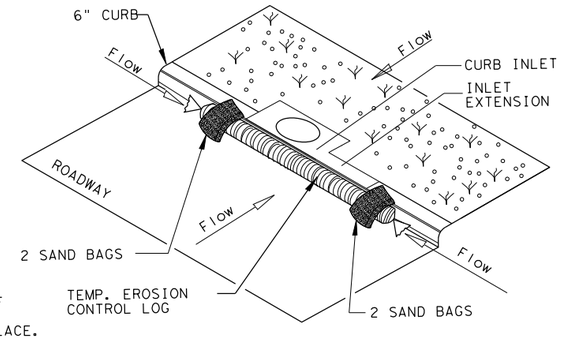

EROSION CONTROL LOG AT CURB INLET

CL-CI

NOTE:
EROSION CONTROL LOGS USED AT CURB INLETS SHOULD ONLY BE USED IF THEY WILL NOT IMPEDE TRAFFIC OR FLOOD THE ROADWAY OR WHEN THE STORM SEWER SYSTEM IS NOT FULLY FUNCTIONAL.

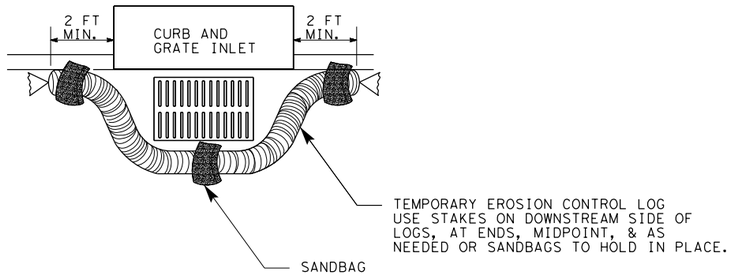

EROSION CONTROL LOG AT CURB & GRADE INLET

CL-GI

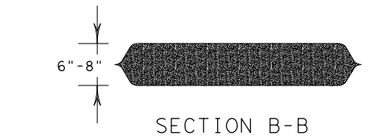

SECTION B-B

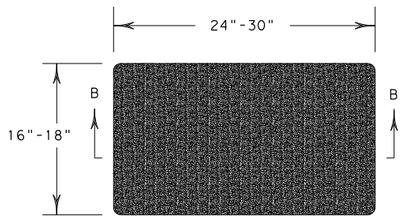

SANDBAG DETAIL

SHEET 3 OF 3

Texas Department of Transportation

Design Division Standard

TEMPORARY EROSION, SEDIMENT AND WATER POLLUTION CONTROL MEASURES

EROSION CONTROL LOG

EC(9)-16

FILE: ec916	DN: TxDOT		CK: KM		DW: LS/PT		CK: LS
© TxDOT: JULY 2016	CONT	SECT	JOB		HIGHWAY		
REVISIONS	0337	01	053		SH 29		
	DIST	COUNTY			SHEET NO.		
	AUS	WILLIAMSON			268		

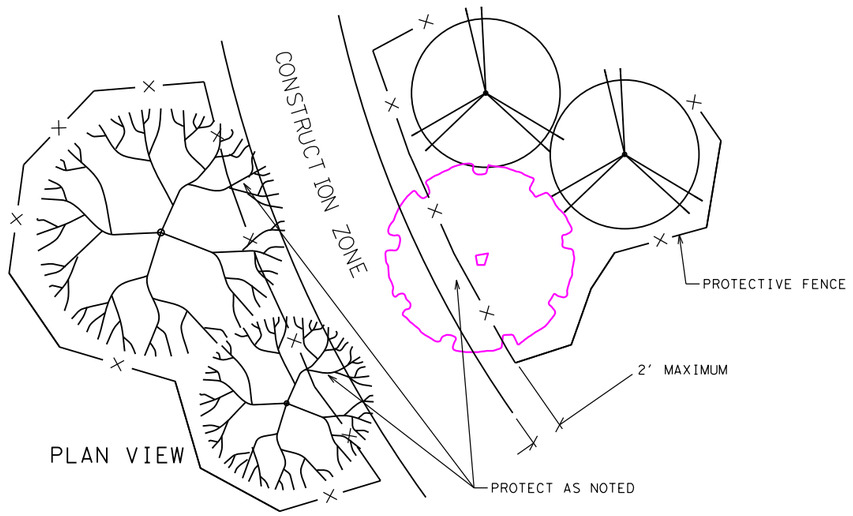

LINEAR CONSTRUCTION THROUGH STAND OF TREES

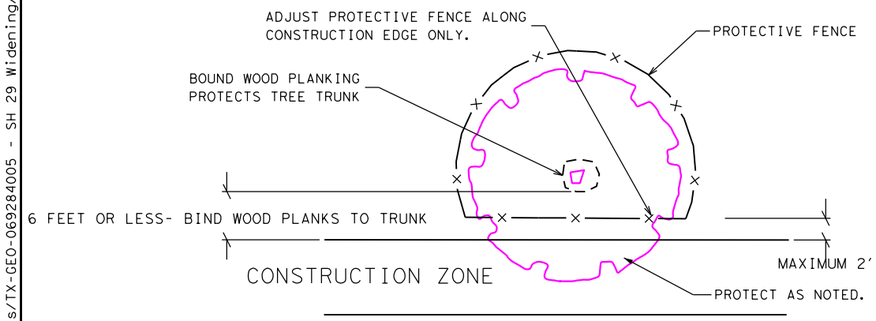

PLAN VIEW

PAVING UNDER TREES

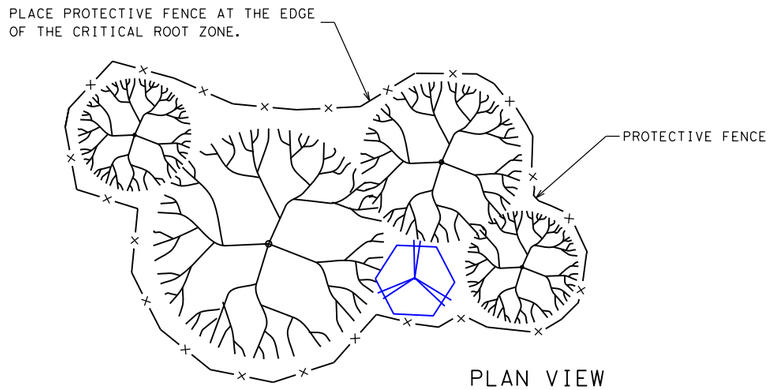

TYPICAL TREE GROUPING PROTECTION

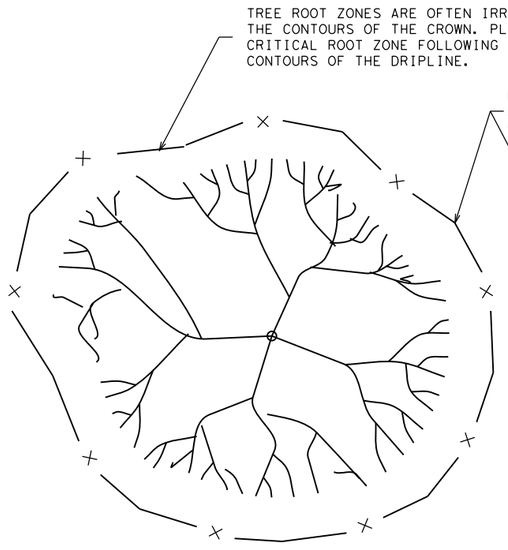

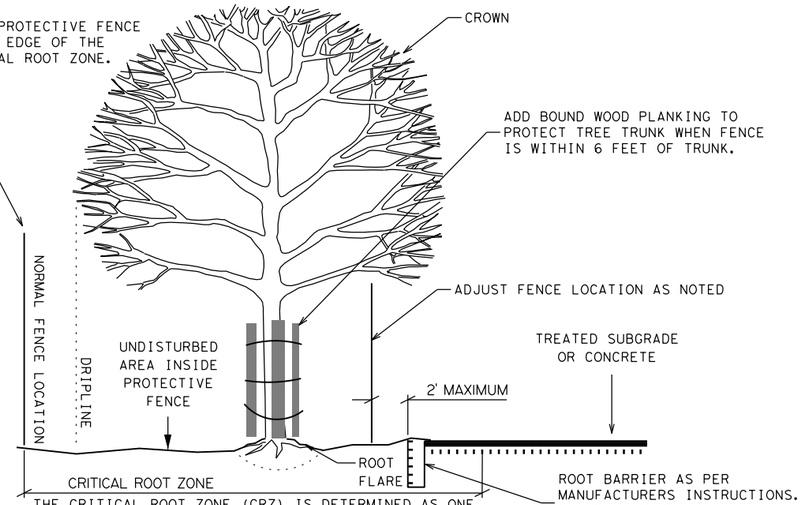

THE CRITICAL ROOT ZONE (CRZ) IS DETERMINED AS ONE (1) FOOT RADIUS FROM TRUNK FOR EACH CALIPER INCH (DIAMETER) OF TRUNK
EXAMPLE: THE CRZ FOR A 6 INCH CALIPER TREE WOULD EXTEND 6 FEET FROM THE TRUNK IN ALL DIRECTIONS

TYPICAL TREE PROTECTION

NOTES:

CRITICAL ROOT ZONE IS 1 FT. AWAY FROM TREE TRUNK FOR EVERY 1 IN. OF TREE DIAMETER MEASURED AT 4 FT. HEIGHT.

WATER TREES EVERY 2 WEEKS WITH A MINIMUM OF 100 GALLONS PER TREE.

SPRAY TREE WITH WATER TO REMOVE CONSTRUCTION DUST WHEN DIRECTED.

CONSTRUCTION FENCE SHALL BE 4 FT. TALL.

DO NOT PERFORM WORK OR STORE EQUIPMENT WITHIN PROTECTED AREA.

COVER THE CRITICAL ROOT ZONE BETWEEN THE PROTECTED AREA AND THE CONSTRUCTION ZONE WITH 4 IN. OF MULCH

PERFORM TREE TRIMMING AND WOUND REPAIR PER STANDARD SPECIFICATIONS.

DAMAGED AND EXPOSED ROOTS SHALL BE TRIMMED AND TREATED PER STANDARD SPECIFICATIONS. BACKFILL EXPOSED ROOTS WITH TOPSOIL WITHIN 24 HOURS OF EXPOSURE.

PLACE PLASTIC UNDER CONCRETE PLACED IN THE CRITICAL ROOT ZONE.

PLACE A ROOT BARRIER IN THE CRITICAL ROOT ZONE AT THE EDGE OF TREATED SUBGRADE TO THE DEPTH OF THE SUBGRADE.

ALL WORK IS SUBSIDIARY TO BID ITEM.

Texas Department of Transportation | Austin District Standard

TREE PROTECTION DETAILS

TPD-19(AUS)

©TxDOT 2017

REVISIONS
06/16: SHEET CREATED
04/19: APPROVED

CONT	SECT	JOB	HIGHWAY
0337	01	053	SH 29
DIST	COUNTY		SHEET NO.
AUS	WILLIAMSON		269

DATE: 12/18/2025 8:50:21 PM
FILE: pw://kh-pw.bentley.com:kh-pw-01/Documents/01 Active Projects/TX-GEO-069284005 - SH 29 Widening/4 - Design/Plan Set/10. Miscellaneous/STANDARDS/tpd-19.dgn

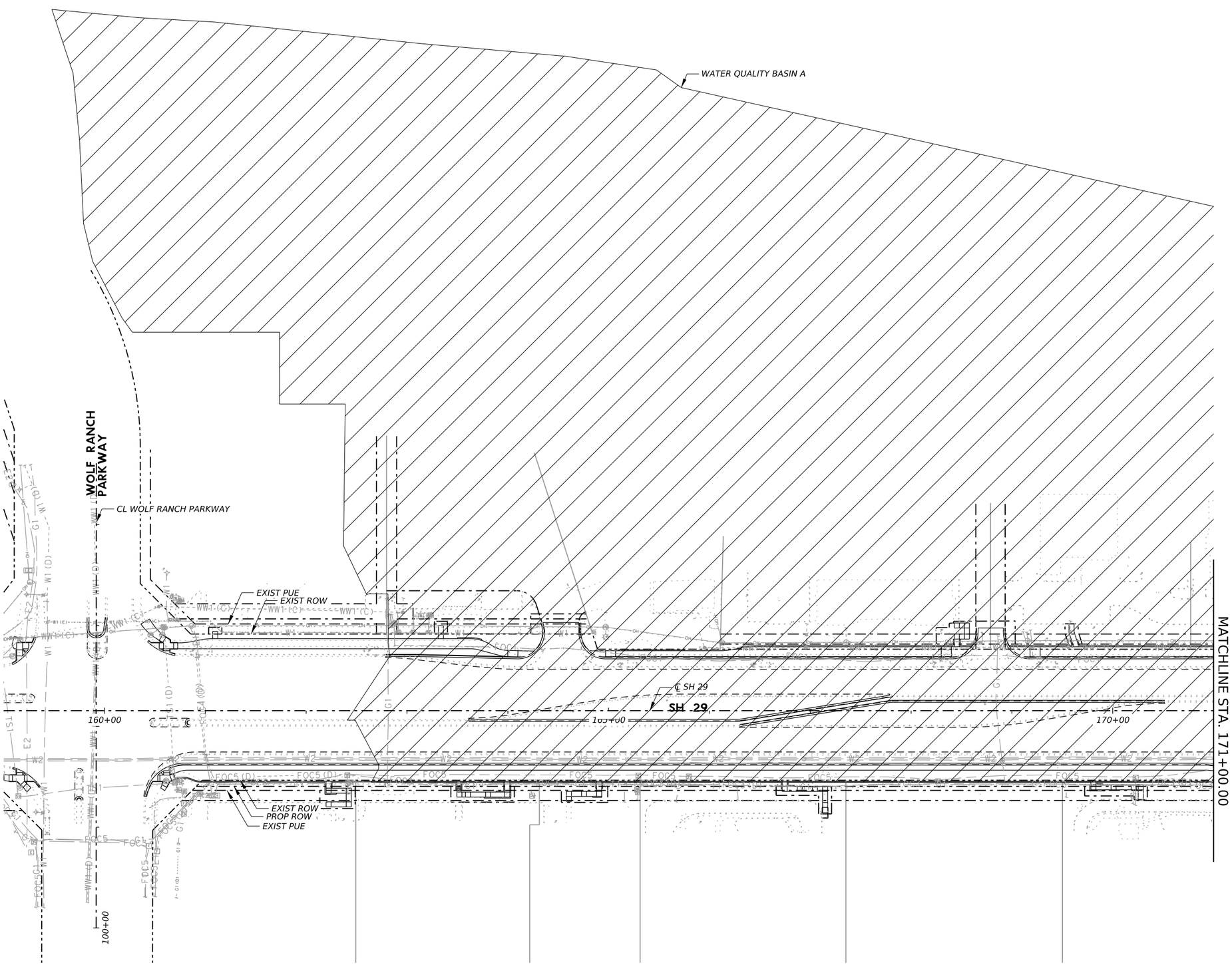

LEGEND

- EXIST PROPERTY LINE
- EXIST ROW
- EXIST PUBLIC UTILITY EASEMENT
- PROP ROW
- TEMP CONSTRUCTION EASEMENT
- PROP PUBLIC UTILITY EASEMENT

NOTES:

1. SEE RUNOFF COMPUTATION SHEETS FOR DRAINAGE AREA CALCULATIONS.
2. EXISTING CONTOURS SHOWN ARE FROM WILLIAMSON COUNTY 2017 LIDAR
3. THERE IS NO FEMA FLOODPLAIN LOCATED WITHIN THE PROJECT LIMITS.
4. CONTRACTOR TO UTILIZE STORMTROOPER WATER QUALITY DEVICE OR AN APPROVED ALTERNATE WITH EQUIVALENT TREATMENT.

0' 50' 100' HORZ

STATE OF TEXAS
MICHAEL CURL
126986
LICENSED PROFESSIONAL ENGINEER

Michael Curl 9/24/2025

GEORGETOWN TEXAS
more than welcome

THE ESTES GROUP
TBPE FIRM REG. NO. F-20926

Texas Department of Transportation

SH 29

WATER QUALITY BASIN MAP
STA 159+00 TO STA 171+00

SHEET 1 OF 2

CONT	SECT	JOB	HIGHWAY
0337	01	053	SH 29
DIST	COUNTY		SHEET NO.
AUS	WILLIAMSON		270

DATE: 9/24/2025 10:45:20 AM
FILE: pw://kh-pw.bentley.com:kh-pw-01/Documents/01 Active Projects/TX-GEO-069284005 - SH 29 Widening/4 - Design/Plan Set/5. Drainage/WPAP/SH29_WPAP_BASIN - 1.dgn

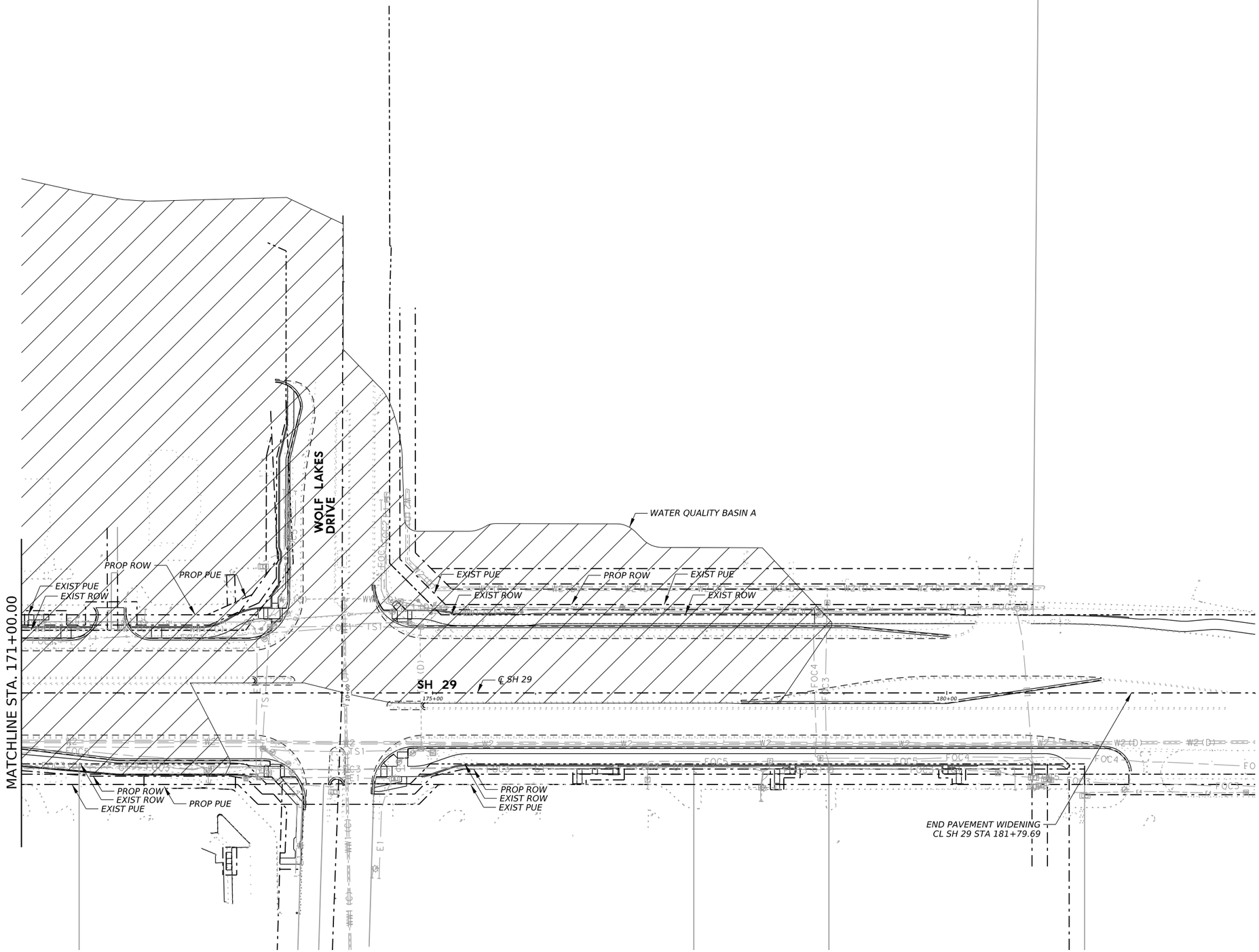

LEGEND

- EXIST PROPERTY LINE
- EXIST ROW
- EXIST PUBLIC UTILITY EASEMENT
- PROP ROW
- TEMP CONSTRUCTION EASEMENT
- PROP PUBLIC UTILITY EASEMENT

NOTES:

1. SEE RUNOFF COMPUTATION SHEETS FOR DRAINAGE AREA CALCULATIONS.
2. EXISTING CONTOURS SHOWN ARE FROM WILLIAMSON COUNTY 2017 LIDAR
3. THERE IS NO FEMA FLOODPLAIN LOCATED WITHIN THE PROJECT LIMITS.

0' 50' 100' HORZ

STATE OF TEXAS
MICHAEL CURL
126986
LICENSED
PROFESSIONAL ENGINEER

Michael Curl

9/24/2025

GEORGETOWN TEXAS
more than welcome

THE ESTES GROUP
TBPE FIRM REG. NO. F-20926

Texas Department of Transportation

SH 29

WATER QUALITY BASIN MAP
STA 171+00 TO END

SHEET 2 OF 2

CONT	SECT	JOB	HIGHWAY
0337	01	053	SH 29
DIST	COUNTY		SHEET NO.
AUS	WILLIAMSON		271

DATE: 9/24/2025 10:45:36 AM
FILE: pw://kh-pw.bentley.com:kh-pw-01/Documents/01 Active Projects/TX-GEO-069284005 - SH 29 Widening/4 - Design/Plan Set/5. Drainage/WPAP/SH29_WPAP_BASIN- 2.dgn

DW: CK: DW: CK:

Texas Commission on Environmental Quality
TSS Removal Calculations per RG-348 (Addendum Item 3.4.20)

AREA 1	DRAINAGE BASIN A

TOTAL SITE DETAILS

Project Name: SH 29
Project Location: Georgetown, TX
Date Prepared: 6/10/2025
Prepared By: Michael Curl, PE

Total Project Area to be Treated = 40.18
Pre-Development Impervious = 22.30
Post-Development Impervious Area = 23.60
Composite Run-Off Coefficient = 0.59
Required TSS Removal L_r = 1137
County = Williamson

STEP ONE: Required TSS Removal

EQUATION 3.3

L_r = 28.93(A_N x P) (Georgetown Requires 85% TSS Removal)

L_r = Required TSS Removal (pounds)

A_N = Net Increase in Impervious Area (acres)

P = Average Annual Precipitation (inches)

Drainage Basin =	20.59	Acres
Pre-Dev. Imp. Area =	9.48	Acres
Post-Dev. Imp. Area =	0.67	
Pervious Area =	10.44	Acres
P =	32	Inches
L_r =	621	Lbs

STEP TWO: Select an Appropriate BMP

Effective Area =	0.92	EA = (Ai x 0.9) + (Ap x 0.03)
StormTrooper SWAQ_	110	
Unit Surface Area =	913	Sq. Ft.

EQUATION 3.4

Q = CiA, where:

C =	0.46	Composite Run-Off Coefficient
i =	1.10	Stormwater Quality Intensity
A =	20.59	Drainage Basin Acreage
Q =	10.39	Required Treatment Flow

EQUATION 3.5

V_o = Q/A, where:

Q =	10.39	Required Treatment Flow
A =	913	Unit Surface Area
V_o =	9.76E-03	Overflow Rate
BMP Effeciency =	50%	

STEP THREE: Calculate Fraction of Annual Runoff to be Treated

Unit By-Pass Flowrate =	8.91	cfs
Treated Intensity =	0.94	in/hr
Annual Volume Treated =	87%	Volume of Run-Off Entering Unit
Treatment Reduction =	0.97	BMP Effeciency Reduction Factor
Actual BMP Effeciency =	50%	

STEP FOUR: Calculate TSS Load Removed by BMPs

EQUATION 3.8

L_r = (BMP Efficiency) x P x (Ax 34.6 + A_p x 0.54)

L_r = Load Removed by BMP

BMP Efficiency = TSS Removal Efficiency

A_I = Impervious Tributary Area to the BMP (ac)

A_p = Pervious Tributary Area to the BMP (ac)

A_I = 10.15
A_p = 10.44

L_r = 5519 lbs

STORMTROOPER	
Model	E.A. @ 80%
5	< 0.13
10	0.14 - 0.20
20	0.21 - 0.33
25	0.34 - 0.50
40	0.51 - 0.79
70	0.80 - 0.98
110	0.99 - 1.23

STATE OF TEXAS
MICHAEL CURL
126986
LICENSED PROFESSIONAL ENGINEER

Michael Curl 9/24/2025

GEORGETOWN TEXAS
more than welcome

THE ESTES GROUP
TBPE FIRM REG. NO. F-20926

Texas Department of Transportation

SH 29

WATER QUALITY CALCULATIONS

SHEET 1 OF 1

CONT	SECT	JOB	HIGHWAY
0337	01	053	SH 29
DIST	COUNTY		SHEET NO.
AUS	WILLIAMSON		272

DATE: 9/24/2025 10:45:52 AM
FILE: pw://kh-pw.bentley.com:kh-pw-01/Documents/01 Active Projects/TX-GEO-069284005 - SH 29 Widening/4 - Design/Plan Set/5. Drainage/WPAP/SH29_WPAP_CALC01

The following TCEQ requirements (Form TNRCC-0592, Rev. 5/01/02) are applicable to all work in recharge zones of the Edwards Aquifer in Hays, Travis and/or Williamson Counties and must be adhered to by the Contractor and all subcontractors:

1. Written construction notification must be given to the appropriate TCEQ regional office no later than 48 hours prior to commencement of the regulated activity. Information must include the date on which the regulated activity will commence, the name of the approved plan for the regulated activity, and the name of the prime contractor and the name and telephone number of the contact person.

2. All contractors conducting regulated activities associated with this project must be provided with complete copies of the approved Water Pollution Abatement Plan and the TCEQ letter indicating the specific conditions of its approval. During the course of these regulated activities, the contractors are required to keep on-site copies of the approved plan and approval letter.

3. If any sensitive feature is discovered during construction, all regulated activities near the sensitive feature must be suspended immediately. The appropriate TCEQ regional office must be immediately notified of any sensitive features encountered during construction. The regulated activities near the sensitive feature may not proceed until the TCEQ has reviewed and approved the methods proposed to protect the sensitive feature and the Edwards Aquifer from any potentially adverse impacts to water quality.

4. No temporary aboveground hydrocarbon and hazardous substance storage tank system is installed within 150 feet of a domestic, industrial, irrigation, or public water supply well, or other sensitive feature.

5. Prior to commencement of construction, all temporary erosion and sedimentation (E&S) control measures must be properly selected, installed, and maintained in accordance with the manufacturers specifications and good engineering practices. Controls specified in the temporary storm water section of the approved Edwards Aquifer Protection Plan are required during construction. If inspections indicate a control has been used inappropriately, or incorrectly, the applicant must ensure that the contractor replace or modify the control for site situations. The controls must remain in place until disturbed areas are revegetated and the areas have become permanently stabilized.

6. If sediment escapes the construction site, off-site accumulations of sediment must be removed at a frequency sufficient to minimize offsite impacts to water quality (e.g., fugitive sediment in street being washed into surface streams or sensitive features by the next rain).

7. Sediment must be removed from sediment traps or sedimentation ponds not later than when design capacity has been reduced by 50%. A permanent stake must be provided that can indicate when the sediment occupies 50% of the basin volume.

8. Litter, construction debris, and construction chemicals exposed to stormwater shall be prevented from becoming a pollutant source for stormwater discharges (e.g., screening outfalls, picked up daily).

9. All spoils (excavated material) generated from the project site must be stored on-site with proper E&S controls. For storage or disposal of spoils at another site on the Edwards Aquifer Recharge Zone, the owner of the site must receive approval of a water pollution abatement plan for the placement of fill material or mass grading prior to the placement of spoils at the other site.

10. Stabilization measures shall be initiated as soon as practicable in portions of the site where construction activities have temporarily or permanently ceased, but in no case more than 14 days after the construction activity in that portion of the site has temporarily or permanently ceased. Where the initiation of stabilization measures by the 14th day after construction activity temporary or permanently cease is precluded by weather conditions, stabilization measures shall be initiated as soon as practicable. Where construction activity on a portion of the site is temporarily ceased, and earth disturbing activities will be resumed within 21 days, temporary stabilization measures do not have to be initiated on that portion of site. In areas experiencing droughts where the initiation of stabilization measures by the 14th day after construction activity has temporarily or permanently ceased is precluded by seasonal arid conditions, stabilization measures shall be initiated as soon as practicable.

11. The following records shall be maintained and made available to the TCEQ upon request: the dates when major grading activities occur; the dates when construction activities temporarily or permanently cease on a portion of the site; and the dates when stabilization measures are initiated.

12. The holder of any approved Edward Aquifer protection plan must notify the appropriate TCEQ regional office in writing and obtain approval from the executive director prior to initiating any of the following:

    A. any physical or operational modification of any water pollution abatement structure(s), including but not limited to ponds, dams, berms, sewage treatment plants, and diversionary structures;

    B. any change in the nature or character of the regulated activity from that which was originally approved or a change which would significantly impact the ability of the plan to prevent pollution of the Edwards Aquifer;

    C. any development of land previously identified as undeveloped in the original water pollution abatement plan.

TCEQ Regional Offices

Austin Regional Office
1921 Cedar Bend, Suite 150
Austin, Texas 78758-5336
Phone (512)339-2929
Fax (512)339-3795

San Antonio Regional Office
14250 Judson Road
San Antonio, Texas 78233-4480
Phone (210)490-3096
Fax (210)545-4329

Texas Department of Transportation
Austin District Design

TCEQ Requirements for Recharge Zone of the Edwards Aquifer

Austin District Standard

© TxDOT 2003

REVISIONS

DIST	FED REG	FEDERAL AID PROJECT •	SHEET
AUS	6		273

COUNTY	CONTROL	SECT	JOB	HIGHWAY
WILLIAMSON	0337	01	053	SH29

Texas Commission on Environmental Quality
Water Pollution Abatement Plan
General Construction Notes

Edwards Aquifer Protection Program Construction Notes – Legal Disclaimer

The following/listed "construction notes" are intended to be advisory in nature only and do not constitute an approval or conditional approval by the Executive Director (ED), nor do they constitute a comprehensive listing of rules or conditions to be followed during construction. Further actions may be required to achieve compliance with TCEQ regulations found in Title 30, Texas Administrative Code (TAC), Chapters 213 and 217, as well as local ordinances and regulations providing for the protection of water quality. Additionally, nothing contained in the following/listed "construction notes" restricts the powers of the ED, the commission or any other governmental entity to prevent, correct, or curtail activities that result or may result in pollution of the Edwards Aquifer or hydrologically connected surface waters. The holder of any Edwards Aquifer Protection Plan containing "construction notes" is still responsible for compliance with Title 30, TAC, Chapters 213 or any other applicable TCEQ regulation, as well as all conditions of an Edwards Aquifer Protection Plan through all phases of plan implementation. Failure to comply with any condition of the ED's approval, whether or not in contradiction of any "construction notes," is a violation of TCEQ regulations and any violation is subject to administrative rules, orders, and penalties as provided under Title 30, TAC § 213.10 (relating to Enforcement). Such violations may also be subject to civil penalties and injunction. The following/listed "construction notes" in no way represent an approved exception by the ED to any part of Title 30 TAC, Chapters 213 and 217, or any other TCEQ applicable regulation

1. A written notice of construction must be submitted to the TCEQ regional office at least 48 hours prior to the start of any regulated activities. This notice must include:
   - the name of the approved project;
   - the activity start date; and
   - the contact information of the prime contractor.

2. All contractors conducting regulated activities associated with this project must be provided with complete copies of the approved Water Pollution Abatement Plan (WPAP) and the TCEQ letter indicating the specific conditions of its approval. During the course of these regulated activities, the contractors are required to keep on-site copies of the approved plan and approval letter.

3. If any sensitive feature(s) (caves, solution cavity, sink hole, etc.) is discovered during construction, all regulated activities near the sensitive feature must be suspended immediately. The appropriate TCEQ regional office must be immediately notified of any sensitive features encountered during construction. Construction activities may not be resumed until the TCEQ has reviewed and approved the appropriate protective measures in order to protect any sensitive feature and the Edwards Aquifer from potentially adverse impacts to water quality.

4. No temporary or permanent hazardous substance storage tank shall be installed within 150 feet of a water supply source, distribution system, well, or sensitive feature.

5. Prior to beginning any construction activity, all temporary erosion and sedimentation (E&S) control measures must be properly installed and maintained in accordance with the approved plans and manufacturers specifications. If inspections indicate a control has been used inappropriately, or incorrectly, the applicant must replace or modify the control for site situations. These controls must remain in place until the disturbed areas have been permanently stabilized.

6. Any sediment that escapes the construction site must be collected and properly disposed of before the next rain event to ensure it is not washed into surface streams, sensitive features, etc.

7. Sediment must be removed from the sediment traps or sedimentation basins not later than when it occupies 50% of the basin's design capacity.

8. Litter, construction debris, and construction chemicals exposed to stormwater shall be prevented from being discharged offsite.

9. All spoils (excavated material) generated from the project site must be stored on-site with proper E&S controls. For storage or disposal of spoils at another site on the Edwards Aquifer Recharge Zone, the owner of the site must receive approval of a water pollution abatement plan for the placement of fill material or mass grading prior to the placement of spoils at the other site.

10. If portions of the site will have a temporary or permanent cease in construction activity lasting longer than 14 days, soil stabilization in those areas shall be initiated as soon as possible prior to the 14th day of inactivity. If activity will resume prior to the 21st day, stabilization measures are not required. If drought conditions or inclement weather prevent action by the 14th day, stabilization measures shall be initiated as soon as possible.

11. The following records shall be maintained and made available to the TCEQ upon request:
    - the dates when major grading activities occur;
    - the dates when construction activities temporarily or permanently cease on a portion of the site; and
    - the dates when stabilization measures are initiated.

12. The holder of any approved Edward Aquifer protection plan must notify the appropriate regional office in writing and obtain approval from the executive director prior to initiating any of the following:

    A. any physical or operational modification of any water pollution abatement structure(s), including but not limited to ponds, dams, berms, sewage treatment plants, and diversionary structures;

    B. any change in the nature or character of the regulated activity from that which was originally approved or a change which would significantly impact the ability of the plan to prevent pollution of the Edwards Aquifer;

    C. any development of land previously identified as undeveloped in the original water pollution abatement plan.

Austin Regional Office 12100 Park 35 Circle, Building A Austin, Texas 78753-1808 Phone (512) 339-2929 Fax (512) 339-3795	San Antonio Regional Office 14250 Judson Road San Antonio, Texas 78233-4480 Phone (210) 490-3096 Fax (210) 545-4329

THESE GENERAL CONSTRUCTION NOTES MUST BE INCLUDED ON THE CONSTRUCTION PLANS PROVIDED TO THE CONTRACTOR AND ALL SUBCONTRACTORS.

GEORGETOWN TEXAS
more than welcome

THE ESTES GROUP
TBPE FIRM REG. NO. F-20926

Texas Department of Transportation

SH 29

TCEQ WPAP GENERAL CONSTRUCTION NOTES

CONT	SECT	JOB	HIGHWAY
0337	01	053	SH 29
DIST	COUNTY		SHEET NO.
AUS	WILLIAMSON		274

STORMTROOPER® AQUIFER DESIGN
EDWARDS
XXXXXX
SWAQ-110
XXXXXX
07/24
PARK
STORMWATER INTERCEPTOR

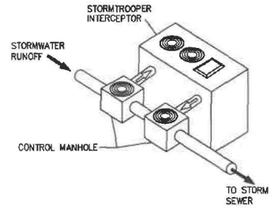

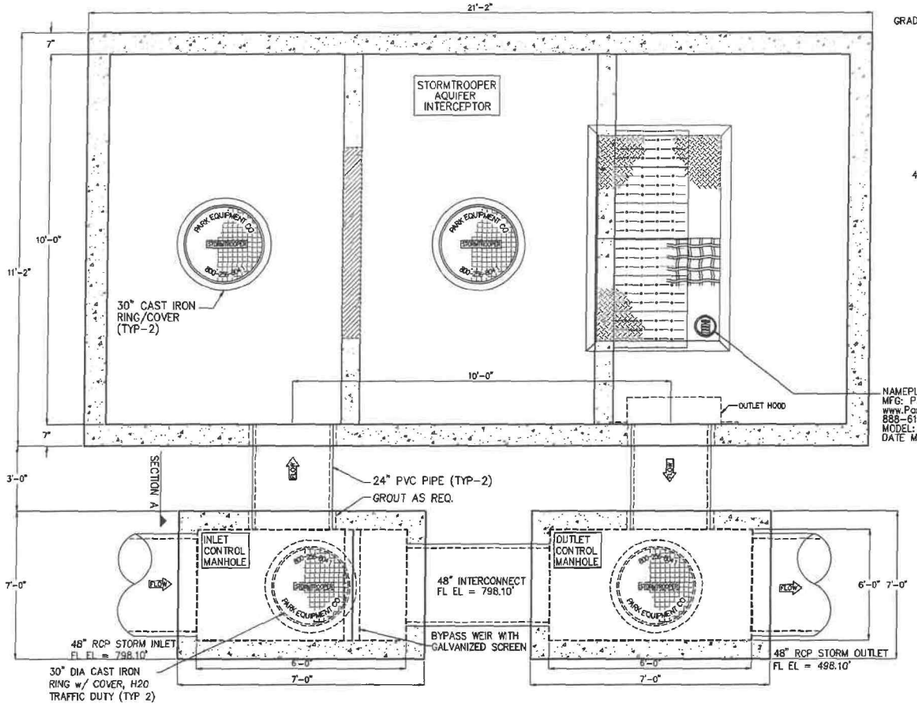

PLAN VIEW



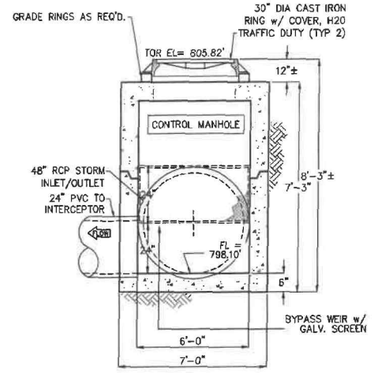

SECTION A

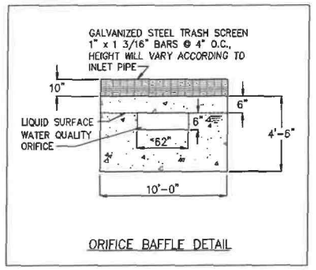

ORIFICE BAFFLE DETAIL

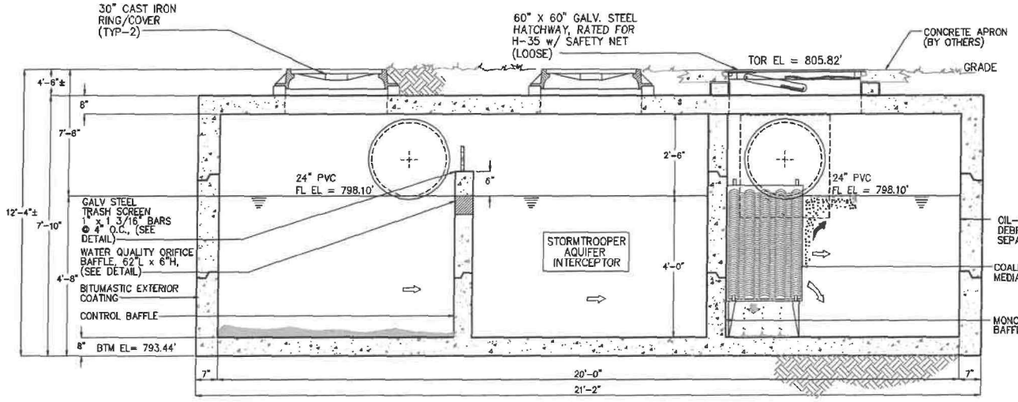

ELEVATION

ENGINEER VERIFY ELEVATIONS PRIOR TO FABRICATION

MODEL NO.	FLOW RATE (gpm)	VAULT SURFACE AREA (sf)	NUMBER OF PLATE COLUMNS	NUMBER OF STACK FEET/ COLUMN	PROJECTED SURFACE AREA OF PLATES (Ft^2)	TOTAL SURFACE AREA OF SYSTEM (Ft^2)	MAXIMUM EFFECTIVE AREA FOR 80% REDUCTION
SWAQ-110	4000	200	6	3.0	713	913	1.23

SPECIFICATIONS

CONCRETE : CLASS 1/N CONCRETE WITH DESIGN STRENGTH OF 4500 PSI AT 28 DAYS. UNIT IS OF MONOLITHIC CONSTRUCTION AT FLOOR AND FIRST STAGE OF WALL WITH SECTIONAL RISER TO REQUIRED DEPTH.

REINFORCEMENT: GRADE 60 REINFORCED WITH STEEL REBAR CONFORMING TO ASTM A615 ON REQUIRED CENTERS OR EQUAL.

GRATING: ALL STEEL FABRICATION SHALL BE IN ACCORDANCE TO AWA D1.1. STEEL SHALL BE ASTM A36 CARBON STEEL, AND HOT-DIPPED GALVANIZED AFTER FABRICATION IN ACCORDANCE TO ASTM A123

ACCESS: MANHOLE FRAMES, COVERS OR GRATES ARE MANUFACTURED OF GRAY CAST IRON CONFORMING TO ASTM A48-76 CLASS 30. MANHOLE SHALL HAVE 30 INCH INSIDE DIAMETER AND BE TRAFFIC DUTY.

HATCHWAY: GALVANIZED STEEL SKID-RESISTANT DOUBLE LEAF H-35 RATED.

ENGINEERING DATA

INTERCEPTOR IS STRUCTURALLY AND HYDRAULICALLY ENGINEERED CONFORMING TO UNIFORM PLUMBING CODE. NOMINAL CAPACITY AS INDICATED.

FIELD EXCAVATION AND PREPARATION SHALL BE COMPLETED PRIOR TO *DELIVERY* OF INTERCEPTOR. USE DIMENSIONAL DATA AS SHOWN.

MEMBERS: NPCA CERTIFIED PLANT · ASPE · ASTM C-913

STATE OF TEXAS
MANISH NAWAL
103676
LICENSED
PROFESSIONAL ENGINEER
Manish Nawal, P.E.
04/25/25

Storm® Trooper AG
Stormwater Treatment System Patent No 7,470,361

GENERAL INFORMATION

THE STORMTROOPER STORMWATER INTERCEPTOR IS DESIGNED TO RECEIVE & TREAT STORMWATER RUNOFF ON A *GRAVITY-FLOW* AND ONCE-THROUGH BASIS.

GUARANTEED PERFORMANCE

PRE-ENGINEERED COALESCING MEDIA PACKS ARE UTILIZED FOR ENHANCED SEPARATION WHICH PROVIDE SUPERIOR PERFORMANCE COMPARED TO OTHER SEPARATORS WHICH UTILIZE BAFFLES OR DIVERTERS.

APPLICATIONS

THE PARK STORM-TROOPER INTERCEPTOR IS DESIGNED FOR STORMWATER RUNOFF FROM COMMERCIAL & INDUSTRIAL APPLICATIONS WHERE *EXCESSIVE* POLLUTANTS MAY HARM THE ENVIRONMENT OR DAMAGE SEWER SYSTEMS.

MAINTENANCE

THE PARK STORM-TROOPER INTERCEPTOR REQUIRES MINIMAL MAINTENANCE. HYDROCARBONS AND SOLIDS ARE REMOVED FROM THE STORMWATER VIA BAFFLES AND COMPARTMENTS.

THESE POLLUTANTS ARE REMOVED FROM THE SEPARATOR WHEN SERVICED BY A LICENSED VACUUM TRUCK OPERATOR.

© ParkUSA, ALL RIGHTS RESERVED.

REV	DATE	BY	DESCRIPTION
A	07/30/24	JJ	ORIGINAL SUBMITTAL

PROJECT: SH29 DRAINAGE
CUSTOMER: .
ENGINEER: THE ESTES GROUP S/N #: .
ORDER #: . PROJ #: 24-64995
DATE: 07/30/2024 LOCATION: GEORGETOWN, TX

PARK USA
A Northwest Pipe Company

STORMTROOPER
STORMWATER QUALITY INTERCEPTOR

PM	PC	DRN	ENG
NW	.	JJ	NS

DATE 07/2024
DWG. NO. SWAQ-110-BYPASS
REV. A

MARK: -
LINE: -
STA: - 179+72.00
SHEET: - 97
DATE: - 05/15/2024

Texas Department of Transportation

SH 29

STORMTROOPER A
SWAQ-110-BYPASS

SHEET 1 OF 1

CONT	SECT	JOB	HIGHWAY
0337	01	053	SH 29
DIST	COUNTY		SHEET NO.
AUS	WILLIAMSON		275

DATE: 9/24/2025 10:46:07 AM
FILE: pw://kh-pw.bentley.com:pw-01/Documents/01 Active Projects/TX-GEO-060234005 - SH 29 Widening/4 - Design/Plan Set/5. Drainage/WPAP/SH29 SWAQ SHEET.dgn

PLOTTED ON 7/30/2024 10:20 AM BY: Jennings, Jacobus, X:\Drawings\STORMWATER\05\STORMTROOPER\Aquifer Drawings - Kirk\Jobs\SWAQ-110-BYPASS-SH29 DRAINAGE-24X36.dgn
CREATED ON 7/30/2024 BY: ——
LAST MODIFIED ON 7/30/2024 10:17 AM BY: JENNINGS

APPENDIX B

CC 337-1-29

WILLIAMSON

FED. RD. DIV. NO.	FEDERAL AID PROJECT NO.		SHEET NO.
6	CC 337-1-29		1
STATE	STATE DIST.	COUNTY	
TEXAS	AUS	WILLIAMSON	
CONT.	SECT.	JOB	HIGHWAY NO.
0337	01	029	SH 29

STATE OF TEXAS
DEPARTMENT OF TRANSPORTATION

PLANS OF PROPOSED
STATE HIGHWAY IMPROVEMENT

STATE AID PROJECT NUMBER

CC 337-1-29

CSJ 0337-01-029

NET LENGTH OF PROJECT= 4675 FT = 0.89 MI

WILLIAMSON COUNTY

SH 29

LIMITS: FROM 0.23 MI. EAST OF D.B. WOOD TO IH 35 SBFR

FOR THE CONSTRUCTION OF A NEW ROADWAY ALIGNMENT AND THE RECONSTRUCTION OF AN EXISTING ROAD CONSISTING OF GRADING, STRUCTURES, ASPHALT CONCRETE PAVING, SIGNING, AND PAVEMENT MARKINGS

DESIGN SPEED = 45 MPH
ADT (2004) = 18,400 VPD
FUTURE ADT (2024) = 32,800 VPD

INDEX OF SHEETS

SHEET NO.	DESCRIPTION
1	TITLE SHEET
2	SUPPLEMENTAL INDEX
3,3A-3J	GENERAL NOTES AND SPECIFICATION DATA SHEETS
4,4A-4C	ESTIMATE & QUANTITY SHEETS
5 - 12	CONSOLIDATED SUMMARIES
13	PROJECT LAYOUT
14 - 17	TYPICAL SECTIONS
18 - 42	TRAFFIC CONTROL PLANS
43 - 67	TRAFFIC CONTROL STANDARDS
68 - 84	ROADWAY PLANS
85 - 91	ROADWAY STANDARDS
92 - 112	DRAINAGE PLANS
113 - 124	DRAINAGE STANDARDS
125 - 134	SIGNING, STRIPING, DELINEATION AND MBGF PLANS
135 - 157A	SIGNING, STRIPING, DELINEATION AND MBGF STANDARDS
158 - 167	TRAFFIC SIGNAL PLANS
168 - 205	TRAFFIC SIGNAL STANDARDS
206 - 215	EROSION CONTROL PLANS
216 - 219	EROSION CONTROL STANDARDS
220 - 238	UTILITY PLANS

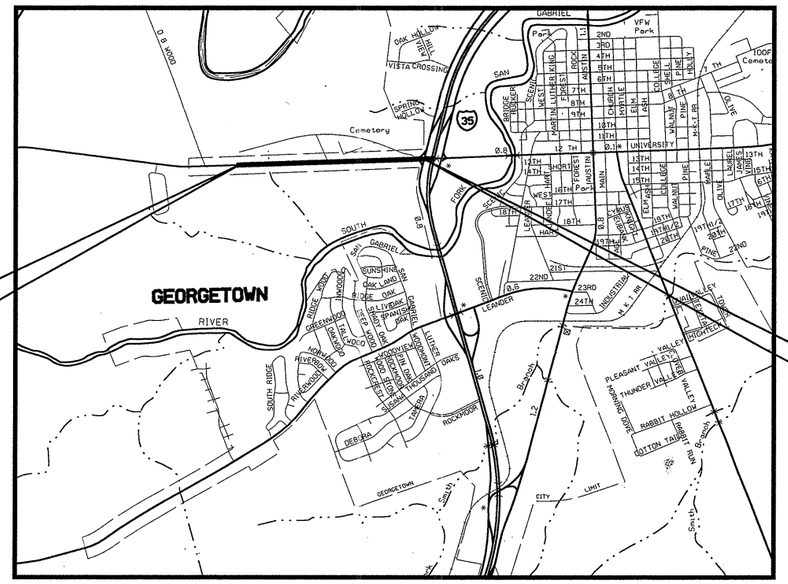

NOT TO SCALE

BEGIN PROJECT
STA. 139+95.00
CSJ 0337-01-029
REF MARKER NO.
552+1.590

END PROJECT
STA. 186+70.00
CSJ 0337-01-029
REF MARKER NO.
554+0.480

FINAL PLANS

FINAL CONTRACT COST.....$6,039,405.35
DATE OF LETTING 12/07/04
DATE WORK BEGAN..... 03/01/05
DATE WORK COMPLETED AND ACCEPTED..... 11/17/06
CONTRACTOR.....AUSTIN BRIDGE & ROAD, L.P.

CHANGE ORDERS

1. **FOUR ITEMS ADDED TO CONTRACT**
2. **RELOCATE GT FEED SIGN**
3. **REMOVE SGT; BACKHOE WK. FOR EROSION CTL**
4. **TEMPORARY TABS**
5. **DELAYS DUE TO UTILITY CONFLICTS**
6. **CR 265 WEST REALIGNMENT**
7. **SOIL RETENTION BLANKET**
8. **LOWER WATERLINE @265 W; TAS AT SBFR I-35**
9. **TRAFFIC CONTROL REVISIONS**
10. **CONDUIT CORRECTIONS; LT TURN SIGNAL MOD.**
11. **TIME EXTENSION FOR EB RT. TURN LN. @ CR 265W**
12. **GT FEED SUPPLY DRAINAGE**
13. **WOLF RANCH PKWY SIGN**
14. **REPLACE SIGN POSTS**

STATE OF TEXAS
JOHN R. WAGNER
70524
REGISTERED
PROFESSIONAL ENGINEER
3-2-09

I HEREBY CERTIFY THAT THIS PROJECT WAS CONSTRUCTED IN SUBSTANTIAL COMPLIANCE WITH THE FINAL AS BUILT PLANS AND SPECIFICATIONS.

COUNTY _____ PROJ. NO. _____
HWY. NO. _____ LETTING DATE _____
DATE ACCEPTED _____

* TDLR INSPECTION REQUIRED

REQUIRED SIGNS SHALL BE PLACED IN ACCORDANCE WITH STANDARD SHEETS BC(1)-03 THRU BC(12)-03 AND THE "TEXAS MANUAL ON UNIFORM TRAFFIC CONTROL DEVICES."

SPECIFICATIONS ADOPTED BY THE TEXAS DEPARTMENT OF TRANSPORTATION, MARCH 1, 1993 AND SPECIFICATION ITEMS LISTED AND DATED AS FOLLOWS, SHALL GOVERN ON THIS PROJECT: SPECIAL LABOR PROVISIONS FOR STATE PROJECTS, (000---2381).

EXCEPTIONS: NONE
EQUATIONS: NONE
RAILROADS: NONE

SUBMITTED FOR LETTING: 9/22/2004
PROJECT MANAGER
CHIANG, PATEL & YERBY, INC.

CP&Y Chiang, Patel & Yerby, Inc.

© 2004 Texas Department of Transportation
ALL RIGHTS RESERVED

CONCURRENCE: 9/22/2004
AREA ENGINEER

RECOMMENDED FOR LETTING: 9/23/04
For DISTRICT DESIGN ENGINEER

APPROVED FOR LETTING:
DIRECTOR, TRAFFIC OPERATIONS DIVISION

RECOMMENDED FOR LETTING: 9/23/04
for DISTRICT ENGINEER

APPROVED FOR LETTING: 10/26/04
FOR DIRECTOR OF DESIGN DIVISION

...\wa3\WEST\common\533Wagy01.001 9/22/2004 9:38:46 AM

GENERAL

1		TITLE SHEET
2		INDEX OF SHEETS
3,3A	- 3J	GENERAL NOTES AND SPECIFICATION DATA
4,4A	- 4C	ESTIMATE AND QUANTITIES
5	- 8	ROADWAY QUANTITIES SUMMARY SHEET
9	- 10	DRAINAGE SUMMARY
11	- 12	SUMMARY OF SMALL SIGNS
13		PROJECT LAYOUT
14	- 17	TYPICAL SECTIONS

TRAFFIC CONTROL PLANS

18		TRAFFIC CONTROL NARRATIVE
19	- 25	TRAFFIC CONTROL PLANS PHASE 1, STEP 1
26	- 32	TRAFFIC CONTROL PLANS PHASE 1, STEP 2
33		TRAFFIC CONTROL PLANS PHASE 1, STEP 3
34	- 40	TRAFFIC CONTROL PLANS PHASE 2, STEP 1
41		TRAFFIC CONTROL PLANS ALTERNATE ROUTE SH 29
42		DETOUR LAYOUT

TRAFFIC CONTROL STANDARDS

43	- 54	BC(1)-03 THRU BC(12)-03
55	- 56	TCP(1-1)-98, TCP(1-4)-98
57	- 59	TCP(2-2)-03, TCP(2-4)-03, TCP(2-5)-03
60	- 61	TCP(3-1)-98, TCP(3-3)-98
62		TCP(7-1)-98
63	- 64	LPCB(1)-92, LPCB(2)-92
65	- 66	WZ(BTS-1)-03, WZ(BTS-2)-03
67		CUTTING AND RESTORING PAVEMENT DETAILS (AUSTIN DISTRICT)

ROADWAY PLANS

68	- 69	HORIZONTAL ALIGNMENT DATA SHEET
70	- 77	ROADWAY PLAN & PROFILES
78	- 81	INTERSECTION LAYOUTS
82		MISCELLANEOUS ROADWAY DETAILS
83	- 84	DRIVEWAY DETAILS

ROADWAY STANDARDS

85		CCCG-01
86		CONCRETE DRIVEWAYS, SIDEWALKS & RIPRAP MEDIANS (AUSTIN DISTRICT)
87		CONCRETE RIPRAP FOR VEGETATION CONTROL (AUSTIN DISTRICT)
88		HEADER TYPE SEALED JOINTS
89	- 91	PEDESTRIAN FACILITIES

DRAINAGE PLANS

92		EXTERNAL DRAINAGE AREA MAP
93	- 97	INTERIOR DRAINAGE AREA MAP
98	- 101	WINDSTORM COMPUTATIONS
102		CULVERT NO. 1 LAYOUT
103	- 111	DRAINAGE PLAN & PROFILE
112		BCS

DRAINAGE STANDARDS

113		SCC-MD
114		SCC-5&6
115		SCP-MD
116		SCP-6
117		ECD
118		PW
119		SETP-PD
120		PSET-SP
121		CURB INLET DETAILS TYPE I & II (AUSTIN DISTRICT)
122	- 123	CURB INLET DETAILS TYPE IR & IIR (36" PIPE AND SMALLER) (AUSTIN DISTRICT)
124		MANHOLE TYPE A AND CAPPED INLET DETAILS (AUSTIN DISTRICT)

SIGNING, STRIPING, DELINEATION AND MBGF PLANS

125	- 132	SIGNING, STRIPING, DELINEATION & MBGF LAYOUTS
133	134	SIGN DETAILS

SIGNING, STRIPING, DELINEATION AND MBGF STANDARDS

135	- 140	TSR(1)-03 THRU TSR(6)-03
141	- 145	SMD(GEN)-02, SMD(SLIP-1)-02 THRU SMD(SLIP-3)-02, SMD(TWT)-02
146	- 151	PM(1)-03, PM(2)-00A,PM(3)-00A PM(4)-03, PM(5)-01, PM(6)-01
152	- 153	D & OM(1)-95, D & OM(2)-95
154		D & OM(VIA)-98
155		MBGF-03A
156		SGT(7)-03A
157		FPM(2)-00A
157A		WZ(DERD)-03

TRAFFIC SIGNAL PLANS

CR 265 WEST

158		TEMPORARY TRAFFIC SIGNAL LAYOUT
159		EXISTING TRAFFIC SIGNAL LAYOUT
160		TRAFFIC SIGNAL LAYOUT
161		PHASING AND WIRING PLAN
162		TRAFFIC SIGNAL ELEVATIONS

IH 35 SBFR

163		TEMPORARY TRAFFIC SIGNAL LAYOUT
164		EXISTING TRAFFIC SIGNAL
165		TRAFFIC SIGNAL LAYOUT
166		PHASING AND WIRING PLAN
167		TRAFFIC SIGNAL ELEVATIONS

TRAFFIC SIGNAL STANDARDS

168		TS-FD-99
169		CFA-99
170		LUM-A-99
171	- 176	RID(1)-04 THRU RID(6)-04
177	- 178	SMA-80(1)-99, SMA-80(2)-96
179	- 181	DMA-80(1)-96 THRU DMA-80(3)-96
182	- 185	LMA(1)-01 THRU LMA(4)-01
186	- 198	ED(1)-03 THRU ED(13)-03
199		MA-C-96
200		MA-C(ILSN)-96
201		MA-D-03
202	- 203	SP-80(1)-96, SP80(2)-96
204		SIGNAL HEAD HORIZONTAL SPAN WIRE MOUNT (AUSTIN DISTRICT)
205		CONTROLLER FOUNDATION DETAILED SHEET (AUSTIN DISTRICT)

EROSION CONTROL PLANS

206	- 208	TxDOT SW3P TEXT SHEET
209	- 215	EROSION CONTROL PLAN

EROSION CONTROL STANDARDS

216	- 218	EC(1)-93 THRU EC(3)-93
219		STORM INLET SEDIMENT TRAP DETAILS (AUSTIN DISTRICT)

UTILITY PLANS

220	- 228	PLAN & PROFILE
229	- 236	MISCELLANEOUS DETAILS
237		GENERAL NOTES
238		SUMMARY SHEET

THE STANDARD SHEETS SPECIFICALLY IDENTIFIED ABOVE HAVE BEEN SELECTED BY ME OR UNDER MY RESPONSIBLE SUPERVISION AS BEING APPLICABLE TO THIS PROJECT.

JAMES J. ROOHMS , P.E. 9/22/2004 DATE

STATE OF TEXAS
JAMES J. ROOHMS
83383
LICENSED
PROFESSIONAL ENGINEER

NO.	REVISION	BY	DATE

CP&Y Chiang, Patel & Yerby, Inc.

© 2004

Texas Department of Transportation

SH 29

SUPPLEMENTAL INDEX

		FED. ROAD DIV. NO.	STATE	FEDERAL AID PROJECT NO.				SHEET NO.
Designed:	KGM	6	TEXAS	CC 337-1-29				2
Checked:	JJR							
Drawn:	KGM	STATE DIST. NO.	COUNTY	CONTROL NO.	SECTION NO.	JOB NO.	HIGHWAY NO.	
Checked:	JJR	14	WILLIAMSON	0337	01	029	SH 29	

GENERAL NOTES:

Basis of Estimate

ITEM	DESCRIPTION	RATE **	BASIS	QUANTITY
160	FURNISH & PLACE TOPSOIL	1 CY/7 SY	26,667 SY	3810 CY
162	MULCH SOD	1 CY/6 SY		
164	SEEDING FOR EROSION CONTROL	4840 SY/AC		
	DRILL (TEMP) WARM	4840 SY/AC	2.754 AC	13,333 SY
	DRILL (TEMP) COOL	4840 SY/AC	2.754 AC	13,333 SY
	DRILL (PERM)	4840 SY/AC	5.509 AC	26,667 SY
166	FERTILIZER (13-13-13)	1/8 LB/SY	26,667 SY	3,333 CY
168	VEGETATIVE WATERING			
	(ITEM 164)(TEMP)	10 GAL/SY	26,667 SY	267 MG
	(ITEM 164)(PERM)	20 GAL/SY	26,667 SY	533 MG
204	SPRINKLING			
	(ITEM 132)	30 GAL/CY		
	(ITEM 160)	100 GAL/CY		
210	ROLLING (FLAT WHEEL)			
	(ITEM 247)	1 HR/200 TON		
	(ITEM 316)	1 HR/6000 SY		
211	ROLLING (TAMPING) (ITEM 132)	1 HR/200 CY		
212	ROLLING (HEAVY TAMPING) (ITEM 132)	1 HR/200 CY		
213	ROLLING (LIGHT PNEUMATIC TIRE) (ITEM 132)	1 HR/500 CY		
316	ONE COURSE SURFACE TREATMENT (UNDERSEAL)			
	ASPH (HFRS-2)	0.30 GAL/SY	11,560 SY	3,468 GAL
	AGGR (TY B GR 5)	1 CY/160 SY	11,560 SY	72 CY
3146	ASPHALT CONCRETE PAVEMENT			
	(TY C)(SURF)(PG 70-22)	110 LB/SY/IN	63,155 SY	6,947 TON
	(TY C)(PG 70-22)	110 LB/SY/IN	53,982 SY	5,938 TON
	(TY B)(PG 70-22)	110 LB/SY/IN	53,739 SY	8,867 TON
	(TY A)(PG 70-22)	110 LB/SY/IN	60,251 SY	39,766 TON

** For informational purposes only

PROJECT NUMBER: CC 337-1-29 SHEET 3
COUNTY: WILLIAMSON CONTROL: 0337-01-029
HIGHWAY: SH 29

Contract time charges shall continue to accrue through the Contractor's completion of the final punchlist.

The Contractor will be required to have weekly meetings with the Engineer to notify him/her of planned work for the upcoming week.

Prior to contract letting, reproducible earthwork cross sections will be available at the Area Engineer's office for borrowing by copying-service companies for making copies at the prospective bidder's expense. GEOPAK earthwork output listings for this project are available upon request on diskettes at the Area Engineer's office.

All construction equipment involved in roadway work shall be equipped, as approved by the Engineer, with a permanently mounted 360° revolving or strobe warning light with amber lens. This light shall have a minimum lens height of 5" and a diameter of 5". The light shall have a mounting height of not less than 6 feet above the roadway surface and shall be visible from all sides. This equipment shall also have attached at each side of the rear end of the vehicle an approved orange warning flag mounted not less than 6 feet above the roadway surface.

The Contractor's attention is directed to the fact that both overhead and underground utilities exist in the vicinity of this project. The exact location of underground utilities is not known. The Contractor shall contact the area utility companies for exact locations at least 48 hours prior to commencing any work that might affect present utilities.

The Contractor shall be responsible for sweeping, mowing and the removal of all litter, construction debris and surplus material on the right of way within the project limits to keep the site of the work in a neat and presentable condition at all times. This work will be considered subsidiary to the various bid items.

Trimming around signs and other obstructions will be required as directed by the Engineer. This work will be considered subsidiary to the various bid items.

The Contractor shall supply litter barrels in sufficient numbers, at locations designated by the Engineer, to control litter within the project. This shall be considered subsidiary to the various bid items.

The Contractor shall utilize a self-contained vacuum broom to sweep the roadway, keeping it free of sediment, as necessary and as directed by the Engineer. One self-contained vacuum broom shall be maintained in good condition at the project site at all times.

The Contractor shall protect all areas of the right of way, which are not included in the actual limits of the proposed construction areas from destruction. Care shall be exercised to prevent damage to trees, vegetation, and other natural surroundings. The areas not to be disturbed shall be determined by the Engineer. The Contractor shall, at his/her expense, restore any area

disturbed as a result of his/her operations to a condition as good as, or better than, that present prior to this contract.

All locations used for storing construction equipment, materials, and stockpiles of any type within the right of way shall be approved by the Engineer. Use of the right of way for these purposes will be restricted to those locations where driver sight distance to businesses and side street intersections is not obstructed and at other locations where an unsightly appearance, as determined by the Engineer, will not exist.

The Contractor shall be responsible for marking every 100-foot station, and shall maintain the markings for the duration of the project. This work shall be considered subsidiary to the various bid items.

The project superintendent shall be English speaking and shall be available on the project at all times when work is being performed.

The scope of this contract will include partial signal construction including, but not limited to, modification of existing signal systems.

The Contractor shall be responsible for picking up material provided by the State from State stockyards.

SW3P/WPAP notes

TxDOT has assumed a U.S. Army Corps of Engineers (USACE) Nationwide Permit #14 for this project. This allows a maximum of 1/10 of an acre of permanent fill to be placed within the creek channel. If more than 1/10 of an acre will need to be filled, a pre-construction notice will need to be completed and mailed to the USACE or an additional permit will need to be obtained by the Contractor prior to construction. All areas temporarily disturbed during construction will be restored to original contours.

If any abandoned wells exist on the site or are found during construction of the proposed development, they shall be plugged in coordination with the Texas Commission on Environmental Quality (TCEQ). The Contractor shall cease construction operations in this area and notify the TxDOT Engineer, who will coordinate the proper plugging procedures with TCEQ.

Any drill holes resulting from core sampling on-site or down-gradient of the site shall be plugged with concrete, from the bottom of the hole to the top of the hole, so as not to allow water or contaminants to enter the subsurface environment.

Construction vehicles shall be restricted from traversing or utilizing existing roadways, unprotected construction areas, and areas with vegetative cover.

Vehicles shall not be maintained on-site during construction, except at designated maintenance sites as approved by the Engineer.

Any soils contaminated during construction of the proposed project shall be transported from the site and properly disposed of off-site, off the recharge zone, and off any area draining to the recharge zone of the Edwards Aquifer.

During construction, wastewater generated on-site shall be collected by chemical toilets and shall be transported off the recharge zone and disposed of properly.

If any significant recharge features, such as sinkholes, caves, or any other subterranean openings are discovered during construction or core sampling, all activities near the feature must be immediately suspended and may not proceed until the TxDOT geologist is present to evaluate. The discovery may require TCEQ review and approval for the methods proposed to protect the aquifer from any potential adverse impacts.

Above-ground storage tanks kept on-site for construction purposes shall be located over bermed impervious liners to prevent any leakage into underlying soils. Additionally, the containment shall be sized to capture 150% of the total volume of fluids stored on-site within the storage area.

No blasting will be allowed within 300 feet of a geologic feature of significant recharge potential without consent of the Engineer. Known locations of these features are available from the Area Engineer.

ITEM 8

The schedule will be required to be submitted in a CPM format utilizing Suretrac or Primavera.

The Work Start date for this project shall be February 10, 2005.

ITEM 9

The Contractor shall provide full-time off-duty uniformed certified peace officers in officially marked police cruisers, as part of traffic control operations.

The peace officers shall be able to show proof of certification by the Texas Commission on Law Enforcement Standards.

ITEM 100

Removal of any obstructions on the right of way and not shown on the plans is included under Preparing Right of Way.

Burning of brush will not be permitted.

The Contractor may be required to remove objectionable material from the right of way by hand.

ITEM 100 & 132

All compaction equipment shall be approved by the Engineer prior to all backfilling and embankment operations.

Detachable sheepsfoot-type wheel mounted on backhoes, trackhoes, and other similar equipment will not be allowed for compaction operations.

ITEM 160

The Engineer shall inspect all topsoil sources before digging begins. All off-site topsoil shall have a minimum PI of 20.

The actual depth of the topsoil shall be as approved by the Engineer.

The contractor shall provide measurements for payment of topsoil quantities prior to seeding.

ITEM 164

Paper mulch will not be permitted.

The seeded area shall be established and growing with the permanent grass, including adequate coverage as determined by the Engineer, before the job is accepted. If all other work is complete, time charges may be suspended until adequate coverage is obtained.

Ryegrass will not be permitted for temporary cover.

Areas to be seeded for temporary erosion control shall receive one-half the rate of fertilizer at the time of temporary seeding and the remaining half at the time of permanent seeding.

ITEM 166

Fertilizer shall be of 13-13-13 analysis.

ITEM 168

Watering applications shall constantly maintain the seedbed in a condition favorable for the growth of grass. Watering can be postponed immediately after a rainfall on the site of 1/2" or greater, but shall be resumed before the soil dries out. Watering shall continue until grass is accepted by the Engineer. If the Contractor fails to water in a sufficient quantity and at times as directed by the Engineer to achieve the desired cover, the Engineer will not make payment for those specific waterings and the area in question will be reseeded at the Contractor's total expense.

The Contractor shall obtain water at a source that is metered or shall furnish the manufacturer's specifications showing the tank capacity for each truck used. The Contractor shall notify the Engineer prior to watering so that the Engineer may verify meter readings or truck counts.

PROJECT NUMBER: CC 337-1-29 SHEET 3B

COUNTY: WILLIAMSON CONTROL: 0337-01-029

HIGHWAY: SH 29

ITEM 204

Sprinkling for the control of dust, as directed by the Engineer, will be required on this project. This work shall be considered subsidiary to the various bid items.

ITEM 316

The open season for application of asphalt is from April 1 to November 1 of each calendar year.

The seal coat shall be placed ahead of the asphaltic concrete pavement laying operation and at no time shall it be placed farther ahead than can be covered in one day with asphaltic concrete, unless otherwise authorized by the Engineer.

The aggregate classification shall be class B.

Loose and surplus aggregate shall be broomed off the surface as directed by the Engineer. This work shall be considered subsidiary to the various bid items.

All surfacing shall include transitions, tapers, and intersections to the limits as directed by the Engineer.

ITEM 354

The loose material shall be completely removed from the roadway prior to opening to traffic and shall remain the property of the Contractor and be disposed of outside the limits of the right of way at a location suitable to the Engineer.

A full lane width will be planed prior to opening to traffic at the end of a work period.

Two-inch depth of planing and texturing will be accomplished in two passes except single cut will be permitted if no more than 1-1/4 inch vertical offset is created against adjacent lanes when opened to traffic at the end of a work period.

Planing shall be tapered at bridge ends as approved by the Engineer. Prior to placing HMAC the tapered surface shall be planed to allow a minimum of 1-inch surface course to abut the bridge ends.

Transverse faces at ends of passes shall be tapered as directed by the Engineer.

ITEM 400

Any concrete or asphaltic concrete pavement areas shall be cut with the use of a saw, unless otherwise directed by the Engineer. This work shall be considered subsidiary to the various bid items.

ITEM 427

All concrete structures shall receive a Surface Area II Class C surface finish in accordance with Item 427.

ITEM 430

The Contractor will be required to remove all silt from new water facilities including culverts, storm drainpipe, and inlets to provide silt free drainage structures at all times, as determined by the Engineer. This work will not be paid for directly but shall be considered subsidiary to Item 430.

Before project acceptance, the Contractor will be required to remove all construction debris from new and existing culverts as a result of his/her operations.

All concrete required for this item shall be Class 'C'.

ITEM 432

All class "B" concrete riprap shall be five (5) inches thick unless shown otherwise on plans.

Additional riprap may be required, as determined by the Engineer, near the end of project completion due to unanticipated erosion locations.

ITEM 460

Pipe ends may be cut in the field to match roadway side slopes. After the pipes have been cut, an asphalt base aluminum paint of good quality shall be applied to the cut ends.

All side road pipe lengths shall be verified in the field to conform to a side slope ratio of 6:1 from the pipe flowline to the base crown of the side road or street.

Ditches must be cut to grade prior to laying pipe.

ITEM 465

Inlet locations shall be adjusted, as directed by the Engineer, to the upstream side of driveways in order to accommodate driveway relocation.

Excavation and backfill, frames, grates, rings and covers shall be considered subsidiary to this bid item.

Temporary drainage shall be provided at each curb inlet and maintained until the final course of asphaltic concrete pavement is placed.

ITEM 466

Removal of existing headwalls and wingwalls will not be paid for directly but will be considered subsidiary to the various bid items.

PROJECT NUMBER: CC 337-1-29 SHEET 3C

COUNTY: WILLIAMSON CONTROL: 0337-01-029

HIGHWAY: SH 29

ITEM 467

Pipe ends shall be cut in the field to match roadway side slopes. After the pipes have been cut, an asphalt base aluminum paint of good quality shall be applied to the cut ends.

ITEM 496

The Contractor shall provide the Engineer with a detailed plan for the removal of the existing structure. The plan, subject to approval by the Engineer, will include the schedule of removal and list of all equipment to be used.

ITEM 502

For any roadway edge of 2 inches or greater adjacent to a roadway which is under traffic, the Contractor shall be required to incorporate and maintain a 3:1 safety wedge into the proposed construction.

The Traffic Control Plan (TCP) for this project shall be as shown in the plans, as detailed on the latest BC standard plan sheets, and as provided for in part VI of the Texas Manual on Uniform Traffic Control Devices. A minimum of two (2) flaggers, two (2) advance flashing arrow panels (TY C), signs as required, 28" minimum cones, and reflectorized drums will be required.

In addition to the Traffic Control Plans and the latest BC standard plan sheets, the Contractor shall provide within the limits of the project, standard barricades, warning signs, delineators, lights, 28" cones, and flaggers in sufficient numbers and any combination as considered necessary by the Engineer.

No daytime lane closures will be permitted.

Overnight lane closures will be permitted between the hours of 8:00 PM and 6:00 AM, Sunday thru Thursday. No overnight lane closures will be permitted on Friday or Saturday unless otherwise approved by the Engineer.

No weekend closures shall be allowed on the weekends, which include the following holidays: January 1st, the last Monday in May, July 4th, the first Monday in September, the fourth Thursday in November, December 25th and Easter weekend. No weekend closures shall be allowed on the weekends of special events that could be impacted by the construction, as determined by the Engineer. Unless otherwise directed by the Engineer, all equipment, vehicles, workers, etc., associated with these closures must be off the affected roadway(s) and all lanes re-opened by no later than noon of the Friday prior to these holidays and special events.

The Contractor will be required to maintain a minimum of one through lane in each direction during the daylight hours except with the written approval of the Engineer.

The Contractor shall place one TY III Barricade (8 feet) at each stockpile of material that is placed on the right of way and is located within 30 feet of the traveled way.

Any work requiring lane closures shall have appropriate portable changeable message boards functional at that location 2 weeks prior to the closures or as shown on the plans. These shall provide advance notice of the closures to the traveling public. The actual message to appear on the boards shall meet the approval of the Engineer.

The use of advance warning flashing arrow panels is required for the closing of traffic lanes. The Contractor shall be required to furnish one stand-by unit, in good working condition at the job site, ready for immediate use.

Access to all side streets and driveways shall be maintained at all times at the sole expense of the Contractor.

The Contractor will be required to furnish advisory speed signs in sufficient number as determined by the Engineer. The Contractor shall have sufficient manpower available to revise traffic control as directed by the Engineer.

For any roadway drop-off greater than 2 inches adjacent to a roadway, which is under traffic, the Contractor will be required to incorporate and maintain a 3:1 safety wedge into the proposed construction. All work involved shall be considered subsidiary to Item 502.

Projects limited to surfacing operations only will not require the use of Truck Mounted Attenuators.

The Contractor shall provide to the Engineer a letter certifying that all Truck-Mounted Attenuators (TMA) used on this project that were purchased on or after October 1, 1998, have been found to be crashworthy using the criteria outlined in the National Cooperative Research Program (NCHRP) Report 350. If the TMA was purchased prior to October 1, 1998, a letter certifying crashworthiness using the criteria outlined in either NCHRP Reports 230 or 350 shall be provided to the Engineer.

All permanent signs necessary for the operation of any roadway shall be installed by the Contractor prior to opening that section of roadway to traffic regardless of the phase during which the roadway construction occurs. The Contractor may erect the signs on temporary mounts until such time as the permanent mounts may be installed. Any costs associated with the temporary mounts shall be considered subsidiary to Item 502. Any signs, which are damaged by the Contractor's operations during construction or deemed insufficient by the Engineer, shall be repaired or replaced at the sole expense of the Contractor. The Engineer will be the sole judge of the adequacy of the sign(s).

ITEM 504

One (1) field office Type "B" structure will be required.

The Contractor shall construct a six feet chain link barrier fence around the field office at a site determined by the Engineer. This enclosure is to be approximately 100 feet x 100 feet, have one

twelve foot vehicular gate, and is for the exclusive use of state personnel and state vehicular storage. A security light will be required. Upon completion of the project, the fence shall be removed and become the property of the Contractor. All required work and materials will not be paid for directly but shall be considered subsidiary to the various bid items.

When hot mix asphaltic concrete is being produced, the hot mix asphaltic concrete material supplier shall provide to TxDOT and/or their representative a computer and printer at the plant. This computer and printer will be located in the lab in which TxDOT testing is conducted. This computer will be for the sole use of TxDOT and/or their representative. This computer must be equipped with an Internet service provider, electronic mail software, and Microsoft® EXCEL. The operating system and all software must be compatible with the systems and software employed by TxDOT.

The Contractor shall furnish a Type D structure for the asphalt mix control laboratory for the Engineer's exclusive use. In addition to the requirements of Item 504, this structure shall have a minimum height of 8 feet and provide a minimum of 400 square feet of gross floor area for permanently located asphalt plants or 200 square feet for temporary located plants serving one project. The floor area will be partitioned into a minimum of two interconnected rooms, each room furnished with an exterior door and a minimum of two windows. The floor shall have sufficient strength to support the testing equipment and have an impervious covering.

The Type D structure shall be adequately air conditioned and be furnished with a minimum of one desk, three chairs, one file cabinet, a telephone, and one built-in equipment storage cabinet for the storage of nuclear equipment. The cabinet shall be a minimum of 3 feet wide by 2 feet deep by 3 feet high and shall have provisions for locking securely. The structure shall be provided with a 240-volt electrical service entrance. The service shall consist of a minimum of four 120-volt circuits with 20-amp breakers and no more than two grounded convenience outlets per circuit and provisions for a minimum of two 220-volt ovens with vents to the outside. The structure shall have a minimum of two convenience outlets per wall, and a utility sink with an adequate clean potable water supply for testing. Space heaters for heating the structure are unacceptable. Portable structures shall be support blocked for stability and tied down.

If the asphalt content is determined by utilizing the ignition method, the structure shall provide for the following in lieu of the Item 504 requirements for asphalt content by extraction. The room to contain the ignition oven shall be adequately power ventilated and contain a NEMA 6-50R (208/240 V, 50 A) outlet within two feet of the ignition oven location, and an independent exhaust outlet to the outside no further than eight feet from the oven. The surface for the ignition oven location shall be level, sturdy, and fireproof with at least 0.5 feet clearance between the furnace and other vertical surfaces.

The Contractor will provide cleaning services to the field office as needed, but not less than once a week. This will include, but not be limited to sweeping and mopping floors, cleaning the toilet and lavatory, and emptying wastebaskets.

An equivalent structure may be substituted in lieu of that specified under this item. Equivalent structure shall be as determined by the Engineer, and accepted only with his/her written approval.

A chemical toilet shall be provided adjacent to the field office for the exclusive use of state personnel assigned to this project.

ITEM 512

At such times when the Portable Concrete Traffic Barrier and connecting hardware is not required, these items shall be stockpiled within the limits of the project or at a location of equal haul distance as directed by the Engineer. The connecting hardware shall be bundled in order to prevent theft or loss at the storage facility. Upon completion of this project the Portable Concrete Barrier will be stockpiled at a location determined by the Engineer. This haul distance will not exceed five miles one way. The Contractor shall point and patch damaged barrier, as determined by the Engineer, prior to removal from project.

ITEM 530

Final driveway locations will be determined by the Engineer.

ITEM 540

Limits of the metal beam guard fence may be modified to the extent determined by the Engineer prior to erection.

All proposed MBGF should be new rail furnished from the Contractor's new stock. Timber posts shall be round, domed, and shall not be painted. Steel posts will be required at locations where the minimum embedment shown in the plans for wooden posts cannot be achieved. The steel post lengths shall be field verified prior to fabrication. Unless otherwise shown on the plans, the steel posts are subsidiary to this item.

When the roadway is constructed in one-half widths, the Contractor shall install all permanent metal beam guard fence and/or delineators on that section before opening the road to traffic.

Prior to beginning the installation of the proposed MBGF, the Contractor shall stake the locations for approval by the Engineer.

ITEM 542

All removed guardrail and end sections will become the property of the Contractor and be removed from the project.

ITEM 556

Pipe underdrains shall be placed as directed by the Engineer during construction.

Filter material (Type F) shall meet the gradation requirements of concrete coarse aggregate (Grade 2, 3 or 4).

ITEM 560

Each new mailbox installation shall be supplemented with a Type 2 object marker placed on the mailbox support in a vertical position 6" below the bottom of the mailbox.

On tubular supports, reflective tape may be used to simulate a Type 2 marker. If reflective tape is used, it shall meet the requirements of departmental specification, D-9-8600. The simulated marker shall consist of three 2 ¾" x 2 ¾" pieces of yellow high intensity tape spaced 1" apart.

If delineator post supports are used, the Type 2 marker shall consist of OM-2SR or OM-2VP object markers. Bi-directional brackets may be required on Size 2 mailbox installations.

All labor and materials shall be considered subsidiary to Item 560.

ITEM 580

The Contractor shall be responsible for sweeping, mowing, and the removal of all litter on the right-of-way within the project limits to keep the site of the work in a neat and presentable condition at all times. Direct payment for this work will not be made for under this Item but will be considered subsidiary to Item 500 "Mobilization."

ITEM 610

Sections of roadway illumination for partial acceptance shall be by completed power stations and related circuits.

Luminaire ballasts furnished for this lighting system shall have a 240-volt operating range.

ITEM 618

Refer to plans and specifications for type of conduit. All couplings and connections shall be tight and waterproof. All proposed and existing conduit shall be brought into a pull box and elbowed unless otherwise shown. Where a conduit run terminates, a bushing shall be provided to protect the wire from abrasion. In the event any conduit shown on these plans or existing proves to be unusable due to location or damage, it will be the responsibility of the Contractor to replace such section of conduit with the size and type indicated on these plans. Any riprap, which must be removed to install conduit, shall be saw cut and replaced by like material and texture as directed by the Engineer.

Place conduit at a minimum depth of 24" unless otherwise shown on the plans or directed by the Engineer.

Conduit shall be placed in an area not exceeding 2 feet in any direction from a straight line and the depth of the conduit shall be 2 feet except when crossing a roadway where the depth shall not

be more than 3 feet nor less than 1 foot below the bottom of the base material in the roadway when placed by the jacking or boring method. Any evidence of damage to the roadway during the jacking or boring operation shall be sufficient grounds to stop the method being used.

The conduit shall be placed on a two-inch sand cushion and then backfilled with a minimum of six inches sand fill. The remainder of the trench shall be backfilled with flexible base, soil, or two-sack concrete as required by the location of the conduit or as directed by the Engineer.

The open trench method of placing conduit will not be allowed unless prior approval is obtained from the Engineer.

When the specifications for electrical items require UL listed products, it will be construed to mean UL listed or CSA listed.

Rigid metal conduit elbows will not be utilized within the traffic signal installed within this contract. All conduit elbows and rigid metal extensions required to be installed on PVC conduit systems will not be paid for separately, but will be considered subsidiary to the various bid items of this project.

ITEM 620

All wiring not covered by the plans and specifications shall be in accordance with the National Electric Code (NEC) and the appropriate TxDOT standard sheets.

Provide breakaway electrical connectors for breakaway poles. Use Bussmann HEBW, Littelfuse LEB, Ferraz-Shawmut FEB, or equal on ungrounded conductors. For grounded conductors, use Bussmann HET, Littelfuse LET, Ferraz-Shawmut FEBN, or equal. These breakaway connectors have a white colored marking and a permanently installed solid neutral. See the latest RID (2) standard for additional details.

Electrical work performed by non-certified persons, as defined in Special Provision to Item 8, is not in accordance with the requirements of the Contract and may be rejected as unsuitable for use due to poor workmanship.

The required electrical certification course is available and is scheduled periodically by TEEX. Alternatively, contractors may purchase an entire course for their personnel to be held at a time and location of their choice as negotiated through TEEX. For more information, contact:

Texas Engineering Extension Service (TEEX)
TxDOT Electrical System Course
(979) 845-6563
(979) 845-6563

PROJECT NUMBER: CC 337-1-29 SHEET 3F

COUNTY: WILLIAMSON CONTROL: 0337-01-029

HIGHWAY: SH 29

ITEM 628

The Signal System will require 120/240-Volt power service provided by the local electric utility company. The Contractor is responsible for making all arrangements with the local electric utility for the establishment of new services.

Provide solid-state lighting contactors at services rated 60 amps or less, instead of the electro-mechanical contactors shown on the plans. Meet the following requirements for solid-state contactors:

1. Ensure the enclosure provides sufficient heat dissipation space. Consult the solid state contactor manufacturer for detailed calculations.
2. Surface mount the contactor in the enclosure.
3. Provide a 2 year limited warranty on defects and workmanship.
4. Ensure the contactor is rated for 240 volt input power and is capable of switching 120, 240, or 480 volt loads.
5. Mark the contactor with the part number.
6. Ensure the contactor is capable of operating between -40° F and 150° F.
7. Ensure the power module operates at 1200 Volts.
8. Provide zero crossing design type contactors.
9. Mount contactor onto an aluminum heat sink.
10. Equip the contactor with an over-temperature sensor set at 167° F that will switch off the contactor if the temperature is exceeded.
11. Ensure that the unit will automatically reset to normal operation after a high temperature switch off when the temperature returns to normal operating range.
12. Provide LED indicating light for control power applied.

ITEM 644

All small signs not detailed in the plans shall be built in accordance to the latest edition of the "Standard Highway Sign Designs for Texas." Where a sign size or particular legend is shown and such sign size or legend is not shown in the publication, the Contractor shall furnish the sign as detailed in the plans.

ITEM 656

The Contractor shall be allowed to field cut holes for anchor bolts only as directed by the Engineer.

The Contractor shall calculate the vertical signal head clearance before placing any traffic signal pole foundation.

Contractor will install two (2) 3" PVC and one (1) 2" PVC conduits into the 48-A foundations from the adjacent signal ground box. Contractor will install one (1) 3" PVC and two (2) 2" PVC conduits into the 36-A foundations from the adjacent signal ground box. Contractor will install

two (2) 2" PVC conduits into the 24-A foundations (Ped Poles) from the adjacent signal ground box. This work shall be considered subsidiary to Item 680.

ITEM 662

The Contractor shall be responsible for removing work zone pavement markings within 48 hours after permanent striping has been completed.

Use of temporary flexible-reflective tabs will not be allowed.

Foil backed pavement markings will not be allowed.

ITEM 666

Type I Reflectorized Pavement Markings shall be placed no sooner than 4 days after applying the final course of HMAC.

The Contractor shall be responsible for referencing existing channelizing islands, gores, and lane striping prior to commencing work. The referencing shall include a sketch of the layout, which shall be provided to the Engineer. The Engineer prior to installation of any permanent pavement markings shall approve placement of guidemarks. This work shall be considered subsidiary to the various bid items.

ITEM 672

Bituminous adhesive shall be used to bond all raised pavement markers to the pavement.

The bituminous adhesive shall be placed at a temperature range of 380° F to 390° F. The pavement marker shall be placed on the bituminous adhesive approximately twenty (20) seconds after the adhesive is placed on the pavement. The pavement marker shall rest solely on the adhesive and not the pavement surface. There shall be at least a one eighth (1/8) inch layer of bituminous adhesive between the pavement marker and the pavement surface.

Raised pavement markers shall be placed no sooner than 4 days after applying the final course of HMAC.

The raised pavement markers used for the broken white stripe (lane lines) shall be placed at 40-foot spacing unless otherwise directed by the Engineer.

ITEM 677

The Contractor will be responsible for removal and disposal of, off of the right of way, any existing raised pavement markings before beginning surfacing operations. The existing traffic buttons and/or pavement markers shall be removed by the Contractor daily, as work progresses, and as approved by the Engineer. This work shall be considered subsidiary to the various bid items.

PROJECT NUMBER: CC 337-1-29 SHEET 36
COUNTY: WILLIAMSON CONTROL: 0337-01-029
HIGHWAY: SH 29

ITEM 680

The Contractor shall be responsible to take control of all signals within the project limits as shown in the plans, to commence within 30 days after the start of work. The Contractor's attention is directed to the fact that both overhead and underground utilities exist in the vicinity of this construction. The exact location of underground utilities is not certain. The Contractor shall contact the area utility companies for exact locations at least 48 hours prior to commencing any work that might affect present utilities. The contractor will be responsible for any costs associated with damage to the existing utilities.

This project shall consist of the installation of all of the materials necessary for a complete signal system as follows:

For this project, the complete Controller Assemblies, signal mast arms, illumination pole w/ arm and VIVDS Camera Systems (to include Mounting Brackets), will be provided by the Engineer. The contractor shall provide all other equipment, install foundations, and all field wiring which shall be properly labeled in accordance with the plans. The contractor shall also provide the foundation for the controller assembly. The Contractor shall install the controller on the completed foundation, connect all field wiring to the controller assembly's back panel, install the conflict monitor, and other equipment. The Engineer will install the signal programming and set the signal on flash. After it has been determined by the Engineer that the field wiring (including any video coax connections) and controller operation are satisfactory and all other requirements of the contract have been met, the Engineer will relieve the Contractor of any other responsibilities for the operation of the signal.

When assuming maintenance and operations of the traffic signal within the limits of this project, the Contractor will be allowed to use the existing Controller at IH-35 and SH 29 to keep the signal active during construction. The contractor shall make arrangements with the District Signal shop for access to the controller. All necessary work required for maintenance and operation of this Controller shall be considered subsidiary to this bid item.

The Contractor is responsible for furnishing all other materials, tools, and labor required to provide a completed installation in accordance with the plans and specifications. All new materials provided by the Contractor shall be new undepreciated stock.

All permanent signs mounted on the traffic signal wires, traffic signal poles, or traffic signal mast arms shall be furnished and installed by the Contractor. The cost of the signs, hardware and erecting the signs shall be subsidiary to Item 680, "Installation of Highway Traffic Signals."

The traffic signal shall not be placed into operation until all required striping is complete and all conflicting signing is removed.

The Contractor will be responsible for picking up materials provided by the State from the traffic signal shop at the Austin District Headquarters. The contractor will contact the traffic signal supervisor a minimum of two weeks prior to the need for the signal controller so that

arrangements can be made for its availability. The traffic signal supervisor can be contacted at (512) 832-7200.

Airwings shall be installed on all mast arms 30 feet and over.

A State Force Account has been set up within the Project to reimburse the State for the cost of providing the Controller Assemblies, Mast Arm Poles, Spread Spectrum radios and antennas, luminaire pole with arm, and VIVDS Camera Systems (to include Mounting Brackets).

The signal at IH 35 and SH 29 will require the northbound frontage road signal heads and cameras to be rewired so they can be connected to the new controller. The existing conductor wires in the bridge railing conduits (two 2") will have to be removed in order to make room for the new wiring. No splices will be allowed. The contractor shall make arrangements for police officers to be on hand for traffic control while the signal is dark. The contractor will use the same size wire to reconnect the signal heads that was removed. The costs associated with this rewiring will be subsidiary to this bid item.

ITEM 681

Under this project there are two separate Temporary Traffic Signals. The temporary signal at IH 35 and SH 29 will use the existing signal poles on the southbound frontage road and controller until the final traffic control phase is complete, unless the pole on the island at the SW corner of this intersection needs moving. If a temporary pole is needed at this location the cost will be considered subsidiary to this bid item.

The temporary signal at CR 265 will be using the 30' poles from the 60' mast arm assemblies. During the different stages of construction, span wires will be attached to the poles in order to allow signal heads to move along the wires as needed. Extra conductor wire will be coiled up near the heads for these movements. This signal will be bagged until warrants are met.

The location of heads will have to be modified to meet requirements of the traffic control plans for both traffic signals found within this project. All costs related to the relocation of the signal heads will be considered subsidiary to this item. Video cameras will be provided by the State for these phases. Contractor is to notify the Austin District Signal Shop in advance of changes in traffic control so that video detection changes can be scheduled. The extra cameras (4) that are used for the temporary signal are to be returned to the State after their use is complete.

ITEM 682

The Signal Heads shall be made of Aluminum and shall be hooded and covered until the signal system is put into initial flash operation.

Each signal head shall be one way with the proper number of sections as shown in the plans. Each head shall be bright yellow in color.

All traffic signal heads installed within this project shall have back plates.

The Contractor shall furnish all lamps required for the traffic signal installation. The Contractor shall at his own expense replace all burned out or defective lamps for a period of four (4) weeks from the date of the initial flash turn on. At the end of this four (4) week period, the Engineer will relieve the Contractor of any maintenance of the signal system.

LED traffic signal lamp will be required for traffic signal heads installed within this project. All LED lamps provided shall be listed on TxDOT's pre-qualified list. Do not use the "Precision" brand LEDs.

ITEM 684

A minimum of 2 feet for each cable run shall be left in each pull box and a minimum length of 2 feet shall be left in each steel pole in addition to the required length for each separate cable. For each conductor terminating in the controller cabinet, an extra 5-foot length will be provided. All conductors are to be continuous without splice from terminal point to terminal point or as otherwise directed by the Engineer. Wire nuts will not be permitted.

ITEM 3146

No HMAC (surface course) shall be placed until all roadways are completed.

Laydown operations shall be performed in such sequence that the longitudinal joint will be carried along without excess distance of lapback, not to exceed one day's operation, unless otherwise authorized by the Engineer.

All hot mix joints of 2 inches or greater will be laid with a device creating a maximum 3:1 notched wedge joint. All work involved shall be considered subsidiary to Item 502.

The transitions from newly placed HMACP to existing HMACP shall be accomplished by use of a milled transition to a butt joint. This transition shall run from 0 in. to 2 in at a 50:1 slope. The width shall equal the mat being laid. This joint shall consist of one paper joint wide minimum and will be cut with the use of a saw to ensure a clean transition. This work will be considered part of normal paving operations and will not be paid for directly, but shall be subsidiary to Item 3146.

Any adjustments or changes made to a job mix formula must be submitted to the Austin District Laboratory prior to production of the new job mix formula.

The aggregate classification for the surface course HMAC shall be class B.

ITEM 5519

The Contractor shall furnish the State inspector with two (2) cellular phones. The cellular phones shall be small enough to carry on a belt holster. The Contractor shall obtain the Engineer's approval for the proposed cellular phones service plan prior to having it put into service.

ITEM 5788

The interlocking modular concrete paving units shall be placed as shown in the plans and details.

Placement of concrete pavers shall not take place until after installation of permanent signing and signals.

The paving units shall be delivered to the job site on pallets, and shall be bound in such a manner that no damage occurs to the product during any handling, hauling, and/or unloading.

Paving units shall be "Holland-Stone" as manufactured by Pavestone Co., 1900 Clovis Barker Road, San Marcos, Texas 78666, or approved equal. The paving unit thickness shall be 2-3/8 inches. The Contractor shall submit samples of colored pavers to the Engineer. The Engineer will determine the color to be used. The paving units shall conform to the ASTM designation C936-82.

The installation Contractor shall have a minimum 3 years experience in the installation of interlocking concrete pavers.

All edges of the installed paving units not restrained by the concrete curb and gutter shall be restrained by a Type F curb as shown on the plans and details.

Base material shall be prepared as detailed in the plans. The base shall be shaped to grade and cross section with an allowable tolerance of 1/4 inch.

The base shall be 3-3/8 inch below final grade for 2-3/8 inch pavers. The finished base surface shall be approved, by the Engineer, prior to placement of the sand laying course.

Once screed and leveled to the desired elevation, the sand laying course shall not be disturbed in any way.

Unless otherwise shown in the plans, the paving units shall be laid in such a manner that the desired pattern (90° herringbone bond) is maintained, and the joints between the units are as tight as possible. The joints between the units shall not exceed 1/8 inch.

Surplus material shall be left on the surface during construction to insure complete filling of joints. Upon completion of all installation work, the paver surface shall be swept and cleaned of all excess soil, foreign material, and stains.

ITEM 5880

In accordance with this Item, Pay Adjustment Schedule 2 and a Localized Roughness Penalty of $500 per occurrence shall be used on this project.

Equipment used for determining ride quality shall be Type "B."

PROJECT NUMBER: CC 337-1-29 SHEET 31

COUNTY: WILLIAMSON CONTROL: 0337-01-029

HIGHWAY: SH 29

ITEM 6010

The Contractor will contact the Traffic Signal Supervisor a minimum of two weeks prior to the need to begin the modification of the existing traffic signal. The Traffic Signal Supervisor can be contacted at (512) 832-7200.

The Contractor will deliver the signal poles, controller and VIVD system components removed within this contract to the Traffic Signal Shop at the Austin District Headquarters.

All other materials removed under this item and not designated for reuse or retention by the State shall become the property of the contractor and shall be removed from the right of way. All costs related to the disposal of these materials or to the delivery of these materials to the State shall be considered subsidiary to this Item.

ITEM 6670

The Contractor shall be responsible for providing Three (3) electronic portable changeable message signs (EPCMS) as part of the traffic control operations. Of these, One (1) shall serve as backup and shall be operational and available on the job site at all times during traffic control operations.

ITEM 8288

Under this item, the contractor will install Spread Spectrum systems at the two signals in this project. Antennas will be installed at the pole nearest the controller. The contractor will install the Spread Spectrum cable in continuous and separate runs from each antenna to the controller. Spread Spectrum cable shall not be installed in the same conduit as illumination conductors. An additional 10-foot length of the coax cable will be provided at the controller for final installation in the controller by State forces.

The State will install the Spread Spectrum radio into the controller, aim the antennae, and complete any other work that is necessary to bring the coordination of traffic signals into operation.

The contractor will provide the incidentals needed to install the radio cable. The Spread Spectrum radio coax cable to be provided by the Contractor will be Beldon LMR 600 or product approved by Austin District Signal Shop.

ITEM 8970

Within this project, the contractor will install a Video Imaging Vehicle Detection System (VIVDS) camera onto the traffic signal mast arm at the locations indicated in the set of plans. Such installation will be made utilizing the attachment mechanisms provided with the camera system. The Contractor will then attach and place the VIVDS communication cable (coaxial) and Traffic Signal Cable (TY A)(3 Conductor)(16 AWG) in continuous and separate runs from the VIVDS camera to the connection in the controller.

State forces will then aim and adjust the camera and complete any other necessary work that is necessary to bring the traffic signals back into operation.

The entire Video Imaging Vehicle Detection System, to include the cameras and processor units, will be provided by the State. The VIVDS system also contains the attachment mechanisms needed to attach the cameras onto the mast arms.

The Contractor will provide the Traffic Signal Cable (TY A)(3 Conductor)(16 AWG) and VIVDS Communication Cable above, as well as any incidentals necessary to install them.

All costs associated with the installation of the cameras onto the traffic signal mast arms, as well as providing the Traffic Signal Cable and VIVDS Communication Cable, will be considered subsidiary to this item.

ESTIMATE SUMMARY

WILLIAMSON COUNTY
CSJ 0337-01-029
ROADWAY

EST.	FINAL	EST.	FINAL	EST.	FINAL	EST.	FINAL	EST.	FINAL	ALT.	ITEM-CODE ITEM NO	ITEM-CODE DESC CODE	ITEM-CODE SPEC NO	DESCRIPTION	UNIT	TOTAL EST.	TOTAL FINAL
								81.340			100	0502		PREP ROW	STA	81.340	
								38231.000			110	0501		EXCAVATION (RDWY)	CY	38231.000	
								5008.000			132	0518		EMBANK (ORD COMP) (TY B) (CL 3)	CY	5008.000	
								26667.000			160	0506		FURN AND PLAC TPSL (CL 2) (4 ")	SY	26667.000	
								13333.000			164	0535	006	DRILL SEED (TEMP) (WARM)	SY	13333.000	
								13333.000			164	0537	006	DRILL SEED (TEMP) (COOL)	SY	13333.000	
								26667.000			164	0569	006	DRILL SEED (PERM) (RURAL) (CLAY)	SY	26667.000	
								533.000			168	0501		VEGETATIVE WATERING	MG	533.000	
								267.000			168	0502		VEG WATERING (TEMP EROSN CONTROL)	MG	267.000	
								3468.000			316	0520		ASPH (HFRS-2)	GAL	3468.000	
								72.000			316	0521		AGGR (TY B GR5)	CY	72.000	
								2480.000			354	0558		PLANE ASPH CONC PAV (5")	SY	2480.000	
								3110.000			354	0573		PLAN ASPH CONC PAV (0" TO 4")	SY	3110.000	
								7771.000			400	0501		STRUCT EXCAV	CY	7771.000	
								27.000			400	0504		STRUCT EXCAV (CULV LARGE)	CY	27.000	
								4191.000			402	0501		TRENCH EXCAV PROTECTION	LF	4191.000	
								188.000			432	0501		RIPRAP (CONC) (CL B)	CY	188.000	
								39.000			460	0503		CMP (GAL STL 18 IN)	LF	39.000	
								37.000			462	0510	003	CONC BOX CULV (5 FT X 6 FT)	LF	37.000	
								1713.000			464	0519	003	RC PIPE (CL IV) (18 IN)	LF	1713.000	
								795.000			464	0520	003	RC PIPE (CL IV) (24 IN)	LF	795.000	
								282.000			464	0521	003	RC PIPE (CL IV) (30 IN)	LF	282.000	
								493.000			464	0522	003	RC PIPE (CL IV) (36 IN)	LF	493.000	
								354.000			464	0523	003	RC PIPE (CL IV) (42 IN)	LF	354.000	
								1174.000			464	0524	003	RC PIPE (CL IV) (48 IN)	LF	1174.000	
								1.000			465	0510		MANH (COMPL) (TY A)	EA	1.000	
								11.000			465	0582		INLET (COMPL) (TY II) (10')	EA	11.000	
								18.000			465	0626		INLET (COMPL) (TY II) (15')	EA	18.000	
								4.000			465	0738		INLET (COMPL) (TY IIA) (10 FT)	EA	4.000	
								3.000			465	0739		INLET (COMPL) (TY IIA) (15 FT)	EA	3.000	
								2.000			466	0507	007	WINGWALL (PW-N) (H= 6 FT)	EA	2.000	
								4.000			467	0680	009	SAFE END TRT (TY II) (18 IN) (RCP) (6: 1)	EA	4.000	
								2.000			467	0688	009	SAFE END TRT (TY II) (18 IN) (CMP) (4: 1)	EA	2.000	
								602.000			496	0504		REMOV OLD STR (PIPE)	LF	602.000	
								22.000			496	0549		REMOVE OLD STR (PIPE) (BOX CULVERT)	LF	22.000	
								1.000			500	0501		MOBILIZATION	LS	1.000	
								10.000			502	0501	027	BARRICADES, SIGNS AND TRAF HANDLE	MO	10.000	
								1198.000			508	0503		CONSTRUCT DETOURS (CL 3)	SY	1198.000	
								200.000			512	0536	001	PORT CTB (LOW PRF TY 2) (MOVE & RESET)	LF	200.000	
								4240.000			512	0545	001	PORT CONC TRF BAR (LOW PRF TY 1) (REMOV)	LF	4240.000	
								4240.000			512	0546	001	PORT CTB (LOW PRF TY 1) (FURN & INSTL)	LF	4240.000	
								400.000			512	0547	001	PORT CTB (LOW PRF TY 2) (FURN & INSTL)	LF	400.000	
								4060.000			512	0548	001	PORT CTB (LOW PRF TY 1) (MOVE & RESET)	LF	4060.000	
								400.000			512	0549	001	PORT CTB (LOW PRF TY 2) (REMOVE)	LF	400.000	
								20627.000			529	0532		CONC CURB & GUTTER (TY II)	LF	20627.000	
								2163.000			530	0501	012	DRVWYS (CONC) (6 ")	SY	2163.000	
								643.000			531	0502	018	CONCRETE SIDEWALKS	SY	643.000	
								89.000			531	0512	018	CONCRETE SIDEWALK (MEDIAN CROSSINGS)	SY	89.000	
								400.000			540	0504	024	MTL BEAM GD FEN (BLKOUT) (12 GA)	LF	400.000	
								200.000			542	0501		REMOV METAL BEAM GUARD FENCE	LF	200.000	

ESTIMATE & QUANTITY SHEET

STATE DIST. NO.	COUNTY	PROJECT NO.	SHEET NO.
14	WILLIAMSON	CC 337-1-29	4

ESTIMATE SUMMARY

EST.	FINAL	EST.	FINAL	EST.	FINAL	EST.	FINAL	WILLIAMSON COUNTY CSJ 0337-01-029 ROADWAY EST.	WILLIAMSON COUNTY CSJ 0337-01-029 ROADWAY FINAL	ALT	ITEM-CODE ITEM NO	ITEM-CODE DESC CODE	ITEM-CODE SP NO	DESCRIPTION	UNIT	TOTAL EST.	TOTAL FINAL
								2.000			542	0503		REMOV TERMINAL-ANCHOR SECTION	EA	2.000	
								100.000			556	0507	001	PIPE UNDDR (TY 7) (6 ")	LF	100.000	
								9.000			560	0501		MAILBOX INSTAL (SINGLE)	EA	9.000	
								1.000			610	0532	002	RDWY ILL ASSEM (SPECIAL)	EA	1.000	
								151.000			618	0511		CONDUIT (PVC) (SCHD 40) (2 ")	LF	151.000	
								4452.000			618	0513		CONDUIT (PVC) (SCHD 40) (3 ")	LF	4452.000	
								50.000			618	0514		CONDUIT (PVC) (SCHD 40) (4 ")	LF	50.000	
								962.000			620	0503		ELEC CONDUCTOR (NO. 8) BARE	LF	962.000	
								33.000			620	0504		ELEC CONDUCTOR (NO. 6) BARE	LF	33.000	
								1059.000			620	0509		ELEC CONDUCTOR (NO. 8) INSULATED	LF	1059.000	
								263.000			620	0510		ELEC CONDUCTOR (NO. 6) INSULATED	LF	263.000	
								8.000			624	0501		GROUND BOX TY A (122311) W/APRON	EA	8.000	
								6.000			624	0503		GROUND BOX TY C (162911) W/APRON	EA	6.000	
								700.000			625	0501		ZINC-COAT STL WIRE STRAND (1/4 IN)	LF	700.000	
								700.000			625	0502		ZINC-COAT STL WIRE STRAND (3/8 IN)	LF	700.000	
								2.000			628	0851		ELC SRV TY D (120/240) 100 (NS) AL (E) PS (U)	EA	2.000	
								19.000			636	0501		ALUM SIGNS (TY A)	SF	19.000	
								25.000			644	0608		SM RD SGN ASSM TY TWT (1) UA (P)	EA	25.000	
								8.000			644	0610		SM RD SGN ASSM TY TWT (1) UA (T)	EA	8.000	
								4.000			644	0614		SM RD SGN ASSM TY 10BWG (1) SA (P)	EA	4.000	
								4.000			644	0615		SM RD SGN ASSM TY 10BWG (1) SA (P-BM)	EA	4.000	
								2.000			644	0619		SM RD SGN ASSM TY 10BWG (1) SA (U)	EA	2.000	
								36.000			656	0510		FND FOR TRAF SIG (24 IN DRIL SHFT)	LF	36.000	
								27.000			656	0512		FND FOR TRAF SIG (36 IN DRIL SHFT)	LF	27.000	
								88.000			656	0514		FND FOR TRAF SIG (48 IN DRIL SHFT)	LF	88.000	
								5.000			656	0518		TRAF SIG CNTRL FND	CY	5.000	
								8.000			658	0501		DEL ASM TY A (D-SW)	EA	8.000	
								12.000			658	0580		OBJ MRK ASM TY 4 (OM-4R)	EA	12.000	
								1660.000			662	0501	007	WRK ZN PAV MRK REMOV (W) (4") (SLD)	LF	1660.000	
								119.000			662	0502	007	WRK ZN PAV MRK REMOV (W) (4") (BRK)	LF	119.000	
								296.000			662	0507	007	WRK ZN PAV MRK REMOV (W) (8") (SLD)	LF	296.000	
								47.000			662	0511	007	WRK ZN PAV MRK REMOV (W) (24") (SLD)	LF	47.000	
								3.000			662	0512	007	WRK ZN PAV MRK REMOV (W) (ARROW)	EA	3.000	
								3.000			662	0516	007	WRK ZN PAV MRK REMOV (W) (WORD)	EA	3.000	
								2754.000			662	0523	007	WRK ZN PAV MRK REMOV (Y) (4") (SLD)	LF	2754.000	
								481.000			662	0524	007	WRK ZN PAV MRK REMOV (Y) (4") (BRK)	LF	481.000	
								11865.000			662	0549	007	WRK ZN PAV MRK NON-REMOV (W) (4") (SLD)	LF	11865.000	
								593.000			662	0550	007	WRK ZN PAV MRK NON-REMOV (W) (4") (BRK)	LF	593.000	
								2348.000			662	0553	007	WRK ZN PAV MRK NON-REMOV (W) (8") (SLD)	LF	2348.000	
								146.000			662	0554	007	WRK ZN PAV MRK NON-REMOV (W) (8") (LNDP)	LF	146.000	
								351.000			662	0557	007	WRK ZN PAV MRK NON-REMOV (W) (24") (SLD)	LF	351.000	
								18.000			662	0558	007	WRK ZN PAV MRK NON-REMOV (W) (ARROW)	EA	18.000	
								18.000			662	0562	007	WRK ZN PAV MRK NON-REMOV (W) (WORD)	EA	18.000	
								21535.000			662	0569	007	WRK ZN PAV MRK NON-REMOV (Y) (4") (SLD)	LF	21535.000	
								3599.000			662	0570	007	WRK ZN PAV MRK NON-REMOV (Y) (4") (BRK)	LF	3599.000	
								83.000			662	0576	007	WRK ZN PAV MRK NON-REMOV (Y) (24") (SLD)	LF	83.000	
								2130.000			666	0501	042	REFL PAV MRK TY I (W) (4") (SLD)	LF	2130.000	
								3309.000			666	0502	042	REFL PAV MRK TY I (W) (4") (BRK)	LF	3309.000	
								117.000			666	0503	042	REFL PAV MRK TY I (W) (4") (DOT)	LF	117.000	
								6891.000			666	0506	042	REFL PAV MRK TY I (W) (8") (SLD)	LF	6891.000	

ESTIMATE & QUANTITY SHEET

STATE DIST. NO.	COUNTY	PROJECT NO.	SHEET NO.
14	WILLIAMSON	CC 337-1-29	4A

ESTIMATE SUMMARY

WILLIAMSON COUNTY
CSJ 0337-01-029
ROADWAY

EST.	FINAL	EST.	FINAL	EST.	FINAL	EST.	FINAL	EST.	FINAL	ALT.	ITEM-CODE ITEM NO	ITEM-CODE DESC CODE	ITEM-CODE SPC NO	DESCRIPTION	UNIT	TOTAL EST.	TOTAL FINAL
								140.000			666	0508	042	REFL PAV MRK TY I (W) (8") (LNDP)	LF	140.000	
								1930.000			666	0509	042	REFL PAV MRK TY I (W) (12") (SLD)	LF	1930.000	
								1848.000			666	0512	042	REFL PAV MRK TY I (W) (24") (SLD)	LF	1848.000	
								44.000			666	0513	042	REFL PAV MRK TY I (W) (ARROW)	EA	44.000	
								38.000			666	0517	042	REFL PAV MRK TY I (W) (WORD)	EA	38.000	
								6200.000			666	0524	042	REFL PAV MRK TY I (Y) (4") (SLD)	LF	6200.000	
								901.000			666	0525	042	REFL PAV MRK TY I (Y) (4") (BRK)	LF	901.000	
								187.000			666	0529	042	REFL PAV MRK TY I (Y) (8") (SLD)	LF	187.000	
								460.000			666	0532	042	REFL PAV MRK TY I (Y) (24") (SLD)	LF	460.000	
								2130.000			666	0535	042	REFL PAV MRK TY II (W) (4") (SLD)	LF	2130.000	
								3309.000			666	0536	042	REFL PAV MRK TY II (W) (4") (BRK)	LF	3309.000	
								117.000			666	0537	042	REFL PAV MRK TY II (W) (4") (DOT)	LF	117.000	
								6891.000			666	0539	042	REFL PAV MRK TY II (W) (8") (SLD)	LF	6891.000	
								140.000			666	0540	042	REFL PAV MRK TY II (W) (8") (LNDP)	LF	140.000	
								1930.000			666	0541	042	REFL PAV MRK TY II (W) (12") (SLD)	LF	1930.000	
								1848.000			666	0544	042	REFL PAV MRK TY II (W) (24") (SLD)	LF	1848.000	
								44.000			666	0545	042	REFL PAV MRK TY II (W) (ARROW)	EA	44.000	
								38.000			666	0549	042	REFL PAV MRK TY II (W) (WORD)	EA	38.000	
								6200.000			666	0556	042	REFL PAV MRK TY II (Y) (4") (SLD)	LF	6200.000	
								901.000			666	0557	042	REFL PAV MRK TY II (Y) (4") (BRK)	LF	901.000	
								187.000			666	0560	042	REFL PAV MRK TY II (Y) (8") (SLD)	LF	187.000	
								460.000			666	0563	042	REFL PAV MRK TY II (Y) (24") (SLD)	LF	460.000	
								154.000			672	0507	012	RAIS PAV MRKR CL B (REFL) TY I-C	EA	154.000	
								594.000			672	0509	012	RAIS PAV MRKR CL B (REFL) TY II-A-A	EA	594.000	
								699.000			672	0510	012	RAIS PAV MRKR CL B (REFL) TY II-C-R	EA	699.000	
								9587.000			677	0501		ELIM EXT PAV MRK & MRKR (4")	LF	9587.000	
								292.000			677	0503		ELIM EXT PAV MRK & MRKR (8")	LF	292.000	
								4.000			677	0507		ELIM EXT PAV MRK & MRKR (ARROW)	EA	4.000	
								4.000			677	0508		ELIM EXT PAV MRK & MRKR (WORD)	EA	4.000	
								2.000			680	0501	007	INSTAL OF HWY TRAF SIG (ISOLATED)	EA	2.000	
								2.000			681	0501		TEMP TRAF SIGNALS FOR CONSTRUCTION	EA	2.000	
								14.000			682	0505		PED SIG SEC (2 INDICATIONS IN 1 SEC)	EA	14.000	
								36.000			682	0509		BACK PLATE (3 SEC) (12 IN)	EA	36.000	
								1.000			682	0511		BACK PLATE (5 SEC) (12 IN)	EA	1.000	
								68.000			682	0524		VEH SIG SEC (12 IN) (W/O LENS & REFL)	EA	68.000	
								279.000			684	0547		TRAF SIG CBL (TY A) (7 CONDR) (14 AWG)	LF	279.000	
								7164.000			684	0552		TRAF SIG CBL (TY A) (3 CONDR) (16 AWG)	LF	7164.000	
								2597.000			684	0565		TRAF SIG CBL (TY A) (4 CONDR) (14 AWG)	LF	2597.000	
								2061.000			684	0570		TRAF SIG CBL (TY A) (5 CONDR) (14 AWG)	LF	2061.000	
								6.000			686	0575	003	TRAF SIG POLE ASM (STL) MAS (INSTAL)	EA	6.000	
								14.000			688	0501		PED DETECT (PUSH BTN)	EA	14.000	
								22.000			1201	0501		12 IN LED TRF SIGNAL LAMP (RED BALL)	EA	22.000	
								13.000			1201	0502		12 IN LED TRF SIGNAL LAMP (YELLOW BALL)	EA	13.000	
								13.000			1201	0503		12 IN LED TRF SIGNAL LAMP (GREEN BALL)	EA	13.000	
								9.000			1201	0504		12 IN LED TRF SIGNAL LAMP (YEL ARW)	EA	9.000	
								9.000			1201	0505		12 IN LED TRF SIGNAL LAMP (GRN ARW)	EA	9.000	
								3473.000			1947	0501		TRENCH SAFETY SYSTEMS	LF	3473.000	
								2259.000			1947	0502		PIPE (8IN) PVC (ASTM D3034 SDR-26) (WW)	LF	2259.000	
								508.000			1947	0503		PIPE (8IN) DI CL 350 (W)	LF	508.000	
								579.000			1947	0504		PIPE (16IN) DI CL 250 (W)	LF	579.000	

ESTIMATE & QUANTITY SHEET

STATE DIST. NO.	COUNTY	PROJECT NO.	SHEET NO.
14	WILLIAMSON	CC 337-1-29	4B

ESTIMATE SUMMARY

EST.	FINAL	EST.	FINAL	EST.	FINAL	EST.	FINAL	WILLIAMSON COUNTY CSJ 0337-01-029 ROADWAY EST.	FINAL	ALT.	ITEM-CODE ITEM NO	DESC CODE	SP NO	DESCRIPTION	UNIT	TOTAL EST.	FINAL
								127.000			1947	0505		PIPE (24IN) DI CL 200 (W)	LF	127.000	
								292.000			1947	0506		ENCASEMENT PIPE (24IN) (STL)	LF	292.000	
								142.500			1947	0507		ENCASEMENT PIPE (30IN) (STL)	LF	142.500	
								3.000			1947	0508		VALVES (GATE) (8IN) DIA	EA	3.000	
								1.000			1947	0509		VALVE (GATE) (16IN) DIA	EA	1.000	
								2.000			1947	0510		VALVE (GATE) (24IN) DIA	EA	2.000	
								13.000			1947	0511		NEW MANHOLE (ALL DEPTHS) (4FT DIA)	EA	13.000	
								3.000			1947	0512		FIRE HYDRANT	EA	3.000	
								2.000			1947	0513		NEW MANHOLE (ALL DEPTHS) (4FT DIA) DROP	EA	2.000	
								39766.000			3146	0501	015	HOT MIX (TY A)	TON	39766.000	
								8867.000			3146	0502	015	HOT MIX (TY B)	TON	8867.000	
								5938.000			3146	0503	015	HOT MIX (TY C)	TON	5938.000	
								6947.000			3146	0520	015	HOT MIX (TY C) (SURF)	TON	6947.000	
								67.000			4454	0501		HEADER TYPE BRIDGE JOINT	CF	67.000	
								400.000			4454	0502		JOINT SEALANT	LF	400.000	
								170.000			5005	0504		ROCK FILTER DAMS (TY 2)	LF	170.000	
								85.000			5005	0505		ROCK FILTER DAMS (REMOV & REPLAC) (TY 2)	LF	85.000	
								170.000			5005	0506		ROCK FILTER DAMS (REMOV) (TY 2)	LF	170.000	
								330.000			5010	0501		CONSTRUCT EXIT (TY 1)	SY	330.000	
								440.000			5010	0502		CONSTRUCT EXIT (REMOV & REPLAC) (TY 1)	SY	440.000	
								330.000			5010	0503		CONSTRUCT EXIT (REMOV) (TY 1)	SY	330.000	
								5227.000			5249	0501		TEMP SEDMT CONT FENCE	LF	5227.000	
								2614.000			5249	0502		TEMP SEDMT CONT FENCE (REMOVE & REPLAC)	LF	2614.000	
								5227.000			5249	0503		TEMP SEDMT CONT FENCE (REMOV)	LF	5227.000	
								96.000			5530	0501		DEAD END ROADWAY BARRICADE	LF	96.000	
								53055.000			5788	0501		LANDSCAPE PAVERS	SF	53055.000	
								4.000			5819	0501		SINGLE GUARDRAIL TERM (TY I)	EA	4.000	
								26.000			5866	0501		CURB RAMP AND LANDING (TY 1)	EA	26.000	
								6.000			6007	0501		RDWY LIGHT ON TRAF SGN POLE (250 WATT)	EA	6.000	
								1.000			6010	0501		SALV TRAF SIGNALS	EA	1.000	
								168.000			6670	0503		PORT CHANGE MES SGN (TY I OR TY II)	DAY	168.000	
								200.000			8288	0504	001	COAXIAL CABLE	LF	200.000	
								3582.000			8970	0505	001	VIVDS COMMUNICATION CABLE (COAXIAL)	LF	3582.000	
														STATE FORCE ACCOUNT WORK (NON-PART)			
														LABOR (RE-AIM CAMERAS)	LS	1.000	
														MATERIAL FURNISHED BY THE STATE			
														SIGNAL SYSTEM	LS	1.000	

ESTIMATE & QUANTITY SHEET

STATE DIST. NO	COUNTY	PROJECT NO.	SHEET NO.
14	WILLIAMSON	CC 337-1-29	4C

ROADWAY PLAN AND PROFILE SUMMARY

SHEET NO.	0100 0502 PREP R.O.W.	0110 0501 EXCAV (RDWY)	0132 0518 EMBANK (ORD COMP) (TY B) (CL 3)	0529 0532 CONC CURB & GUTTER (TY II)	3146 0501 HOT MIX (TY A)	3146 0502 HOT MIX (TY B)	3146 0503 HOT MIX (TY C)	3146 0520 HOT MIX (TY C) (SURF)	0531 0502 CONCRETE SIDEWALKS	0531 0512 CONCRETE SIDEWALK (MED CROSSING)	5866 0501 CURB RAMP AND LANDING (TY 1)	4454 0501 HEADER TYPE BRIDGE JOINT	4454 0502 JOINT SEALANT	0618 0513 CONDUIT (PVC)(SCHD 40) (3")	0624 0503 GROUND BOX (TY C) W/ APRON (162911)	0354 0522 PLAN ASPH CONC PAV (5")
	FT	CY	CY	LF	TON	TON	TON	TON	SY	SY	EA	CF	LF	LF	EA	SY
1 OF 8	1670	2730	1739	1210	3239	732	488	1418	0	0	0	0	0	0	0	0
2 OF 8	1100	7357	873	3498	6246	1336	891	891	0	0	0	0	0	0	0	798
3 OF 8	1100	7104	733	3944	7557	1674	1116	1028	251	35	8	0	0	0	0	574
4 OF 8	1100	7872	752	4000	7579	1669	1113	1050	282	39	8	0	0	0	0	598
5 OF 8	1103	4422	292	2810	4804	1082	721	998	110	15	10	67	400	0	0	510
6 OF 8	1100	5121	115	2926	6321	1485	990	934	0	0	0	0	0	0	0	0
7 OF 8	426	2211	0	1369	1942	429	286	286	0	0	0	0	0	1620	4	0
8 OF 8	535	1444	504	870	2078	460	333	342	0	0	0	0	0	0	0	0
TOTAL	8134	38231	5008	20627	39766	8867	5938	6947	643	89	26	67	400	1620	4	2480

SHEET NO.	0354 0573 PLAN ASPH CONC PAV (0" TO 4")	0556 0507 PIPE UNDDR (TY 7) (6")	0316 0520 ASPH (HFRS-2)	0316 0521 AGGR (TY B GR5)
	SY	LF	GAL	CY
1 OF 8	0	0	2535	53
2 OF 8	0	0	0	0
3 OF 8	0	0	0	0
4 OF 8	0	0	0	0
5 OF 8	3110	0	933	19
6 OF 8	0	0	0	0
7 OF 8	0	0	0	0
8 OF 8	0	0	0	0
TOTAL	3110	100	3468	72

TRAFFIC SIGNAL SUMMARY

INTERSECTION	0610 0532 RDWY ILL ASSEM (SPECIAL)	0618 0511 CONDUIT (PVC) (SCHD 40) (2")	0618 0513 CONDUIT (PVC) (SCHD 40) (3")	0618 0514 CONDUIT (PVC) (SCHD 40) (4")	0620 0503 ELEC. CONDUCTOR (NO. 8) BARE	0620 0504 ELEC. CONDUCTOR (NO. 6) BARE	0620 0509 ELEC. CONDUCTOR (NO. 8) INSULATED	0620 0510 ELEC. CONDUCTOR (NO. 6) INSULATED	0624 0501 GROUND BOX TY A (122311) W/ APRON	0624 0503 GROUND BOX TY C (162911) W/ APRON
	EA	LF	LF	LF	LF	LF	LF	LF	EA	EA
CR 265 WEST		17	1410	36	553	17	688	17	3	1
IH 35 SBFR	1	134	1422	14	409	16	371	246	5	1
TOTAL	1	151	2832	50	962	33	1059	263	8	2

INTERSECTION	0625 0501 ZINC-COAT STL WIRE STRAND (1/4 IN)	0625 0502 ZINC-COAT STL WIRE STRAND (3/8 IN)	0628 0851 ELEC SERV TY D (120/240) 100(NS) AL(E) PS(U)	0656 0510 FND FOR TRAF SIG (24 IN DRIL SHFT)	0656 0512 FND FOR TRAF SIG (36 IN DRIL SHFT)	0656 0514 FND FOR TRAF SIG (48 IN DRIL SHFT)	0656 0518 TRAF SIG CNTRL FND	0680 0501 INSTAL OF HWY TRAF SIG (ISOLATED)	0682 0505 PED SIG SEC (2 INDICATIONS IN 1 SEC)	0682 0509 BACK PLATE (3 SEC) (12 IN)
	LF	LF	EA	LF	LF	LF	CY	EA	EA	EA
CR 265 WEST	700	700	1	18		88	2.22	1	8	15
IH 35 SBFR			1	18	27		2.22	1	6	21
TOTAL	700	700	2	36	27	88	5	2	14	36

INTERSECTION	0682 0511 BACK PLATE (5 SEC) (12 IN)	0682 0524 VEH SIG SEC (12 IN) W/O LENS & REFL	0684 0547 TRAF SIG CBL (TY A) (7 CONDR) (14 AWG)	0684 0565 TRAF SIG CBL (TY A) (4 CONDR) (14 AWG)	0684 0570 TRAF SIG CBL (TY A) (5 CONDR) (14 AWG)	0686 0575 TRAF SIG POLE (STL) MAS (INSTAL)	0688 0501 PED DETECT (PUSH BTN)	1201 0501 12 IN LED TRF SIGNAL LAMP (RED BALL)	1201 0502 12 IN LED TRF SIGNAL LAMP (YELLOW BALL)	1201 0503 12 IN LED TRF SIGNAL LAMP (GREEN BALL)
	EA	EA	LF	LF	LF	EA	EA	EA	EA	EA
CR 265 WEST		45		1911	1266	4	8	15	8	8
IH 35 SBFR	1	23	279	686	795	2	6	7	5	5
TOTAL	1	68	279	2597	2061	6	14	22	13	13

INTERSECTION	1201 0504 12 IN LED TRF SIGNAL LAMP (YEL ARW)	1201 0505 12 IN LED TRF SIGNAL LAMP (GRN ARW)	6007 0501 RDWY LIGHT ON TRAF SGN POLE (250 WATT)	6010 0501 SALV TRAF SIGNALS	8288 0504 RADIO COAX-LMR 600	8970 0505 VIVDS COMM CABLE (COAXIAL)	0684 0522 TRAF SIG CBL (TY A) (3 CONDR) (16 AWG)
	EA	EA	EA	EA	LF	LF	LF
CR 265 WEST	7	7	4		100	1004	1004
IH 35 SBFR	2	2	2	1	100	2578	2578
TOTAL	9	9	6	1	200	3582	3582

DRIVEWAY SUMMARY

SHEET NO.	DRIVEWAY NO.	0530 0501 DRVWYS (CONC) (6")	0110 0501 * EXCAVATION	0132 0518 * EMBANK (ORD) (COMP) (TY B) (CL3)
		SY	CY	CY
1 OF 8	1	86	8	0
1 OF 8	2	46	0	64
1 OF 8	3	46	0	62
2 OF 8	4	73	7	0
2 OF 8	5	46	0	40
2 OF 8	6	46	14	0
2 OF 8	7	46	2	10
3 OF 8	8	139	23	0
3 OF 8	9	50	7	0
3 OF 8	10	32	1	0
4 OF 8	11	32	6	0
4 OF 8	12	125	68	0
4 OF 8	13	73	15	0
4 OF 8	14	403	5	117
5 OF 8	15	50	12	0
5 OF 8	16	71	10	0
6 OF 8	17	121	2	4
6 OF 8	18	178	47	0
6 OF 8	19	106	12	0
6 OF 8	20	96	26	0
6 OF 8	21	99	18	0
7 OF 8	22	109	35	0
7 OF 8	23	90	19	0
TOTAL		2163	337	297

*FOR CONTRACTOR'S INFORMATION ONLY

NO.	REVISION	BY	DATE

CP&Y Chiang, Patel & Yerby, Inc.

© 2004

Texas Department of Transportation

SH 29

ROADWAY QUANTITIES SUMMARY SHEET

		FED. ROAD DIV. NO.	STATE	FEDERAL AID PROJECT NO.				SHEET NO.
Designed:	AJW	6	TEXAS	CC 337-1-29				5
Checked:	JWP	STATE DIST. NO.	COUNTY		CONTROL NO.	SECTION NO.	JOB NO.	HIGHWAY NO.
Drawn:	DHS	14	WILLIAMSON		0337	01	02	SH 29
Checked:	JJR							

1 OF 4

...\WA3\WEST\Common\533Wpq01.001 10/11/2004 3:15:45 PM

ROADWAY PLAN AND PROFILE SUMMARY

SHEET NO.	0100 0502 PREP R.O.W.	0110 0501 EXCAV (RDWY)	0132 0518 EMBANK (ORD COMP) (TY B) (CL 3)	0529 0532 CONC CURB & GUTTER (TY II)	3146 0501 HOT MIX (TY A)	3146 0502 HOT MIX (TY B)	3146 0503 HOT MIX (TY C)	3146 0520 HOT MIX (TY C) (SURF)	0531 0502 CONCRETE SIDEWALKS	0531 0512 CONCRETE SIDEWALK (MED CROSSING)	5866 0501 CURB RAMP AND LANDING (TY 1)	4454 0501 HEADER TYPE BRIDGE JOINT	4454 0502 JOINT SEALANT	0618 0513 CONDUIT (PVC)(SCHD 40) (3")	0624 0503 GROUND BOX (TY C) W/ APRON (162911)	0354 0522 PLAN ASPH CONC PAV (5")
	FT	CY	CY	LF	TON	TON	TON	TON	SY	SY	EA	CF	LF	LF	EA	SY
1 OF 8	1670	2730	1739	1210	3239	732	488	1418	0	0	0	0	0	0	0	0
2 OF 8	1100	7357	873	3498	6246	1336	891	891	0	0	0	0	0	0	0	798
3 OF 8	1100	7104	733	3944	7557	1674	1116	1028	251	35	8	0	0	0	0	574
4 OF 8	1100	7872	752	4000	7579	1669	1113	1050	282	39	8	0	0	0	0	598
5 OF 8	1103	4422	292	2810	4804	1082	721	998	110	15	10	67	400	0	0	510
6 OF 8	1100	5121	115	2926	6321	1485	990	934	0	0	0	0	0	0	0	0
7 OF 8	426	2211	0	1369	1942	429	286	286	0	0	0	0	0	1620	4	0
8 OF 8	535	1240	487	870	2078	460	333	342	0	0	0	0	0	0	0	0
TOTAL	8134	38057	4991	20627	39766	8867	5938	6947	643	89	26	67	400	1620	4	2480

SHEET NO.	0354 0573 PLAN ASPH CONC PAV (0" TO 4")	0556 0507 PIPE UNDDR (TY 7) (6")	0316 0520 ASPH (HFRS-2)	0316 0521 AGGR (TY B GR5)
	SY	LF	GAL	CY
1 OF 8	0	0	2535	53
2 OF 8	0	0	0	0
3 OF 8	0	0	0	0
4 OF 8	0	0	0	0
5 OF 8	3110	0	933	19
6 OF 8	0	0	0	0
7 OF 8	0	0	0	0
8 OF 8	0	0	0	0
TOTAL	3110	100	3468	72

TRAFFIC SIGNAL SUMMARY

INTERSECTION	0610 0532 RDWY ILL ASSEM (SPECIAL)	0618 0511 CONDUIT (PVC) (SCHD 40) (2")	0618 0513 CONDUIT (PVC) (SCHD 40) (3")	0618 0514 CONDUIT (PVC) (SCHD 40) (4")	0620 0503 ELEC. CONDUCTOR (NO. 8) BARE	0620 0504 ELEC. CONDUCTOR (NO. 6) BARE	0620 0509 ELEC. CONDUCTOR (NO. 8) INSULATED	0620 0510 ELEC. CONDUCTOR (NO. 6) INSULATED	0624 0501 GROUND BOX TY A (122311) W/ APRON	0624 0503 GROUND BOX TY C (162911) W/ APRON
	EA	LF	LF	LF	LF	LF	LF	LF	EA	EA
CR 265 WEST		17	1410	36	553	17	688	17	3	1
IH 35 SBFR	1	134	1422	14	409	16	371	246	5	1
TOTAL	1	151	2832	50	962	33	1059	263	8	2

INTERSECTION	0625 0501 ZINC-COAT STL WIRE STRAND (1/4 IN)	0625 0502 ZINC-COAT STL WIRE STRAND (3/8 IN)	0628 0851 ELEC SERV TY D (120/240) 100(NS) AL(E) PS(U)	0656 0510 FND FOR TRAF SIG (24 IN DRIL SHFT)	0656 0512 FND FOR TRAF SIG (36 IN DRIL SHFT)	0656 0514 FND FOR TRAF SIG (48 IN DRIL SHFT)	0656 0518 TRAF SIG CNTRL FND	0680 0501 INSTAL OF HWY TRAF SIG (ISOLATED)	0682 0505 PED SIG SEC (2 INDICATIONS IN 1 SEC)	0682 0509 BACK PLATE (3 SEC) (12 IN)
	LF	LF	EA	LF	LF	LF	CY	EA	EA	EA
CR 265 WEST	700	700	1	18		88	2.22	1	8	15
IH 35 SBFR			1	18	27		2.22	1	6	21
TOTAL	700	700	2	36	27	88	5	2	14	36

INTERSECTION	0682 0511 BACK PLATE (5 SEC) (12 IN)	0682 0524 VEH SIG SEC (12 IN) W/O LENS & REFL	0684 0547 TRAF SIG CBL (TY A) (7 CONDR) (14 AWG)	0684 0565 TRAF SIG CBL (TY A) (4 CONDR) (14 AWG)	0684 0570 TRAF SIG CBL (TY A) (5 CONDR) (14 AWG)	0686 0575 TRAF SIG POLE (STL) MAS (INSTAL)	0688 0501 PED DETECT (PUSH BTN)	1201 0501 12 IN LED TRF SIGNAL LAMP (RED BALL)	1201 0502 12 IN LED TRF SIGNAL LAMP (YELLOW BALL)	1201 0503 12 IN LED TRF SIGNAL LAMP (GREEN BALL)
	EA	EA	LF	LF	LF	EA	EA	EA	EA	EA
CR 265 WEST		45		1911	1266	4	8	15	8	8
IH 35 SBFR	1	23	279	686	795	2	6	7	5	5
TOTAL	1	68	279	2597	2061	6	14	22	13	13

INTERSECTION	1201 0504 12 IN LED TRF SIGNAL LAMP (YEL ARW)	1201 0505 12 IN LED TRF SIGNAL LAMP (GRN ARW)	6007 0501 RDWY LIGHT ON TRAF SGN POLE (250 WATT)	6010 0501 SALV TRAF SIGNALS	8288 0504 RADIO COAX-LMR 600	8970 0505 VIVDS COMM CABLE (COAXIAL)	8970 0505 VIVDS POWER CABLE (3CONDR) (16 AWG)
	EA	EA	EA	EA	LF	LF	LF
CR 265 WEST	7	7	4		100	1004	1004
IH 35 SBFR	2	2	2	1	100	2578	2578
TOTAL	9	9	6	1	200	3582	3582

DRIVEWAY SUMMARY

SHEET NO.	DRIVEWAY NO.	0530 0501 DRVWYS (CONC) (6")	0110 0501 * EXCAVATION	0132 0518 * EMBANK (ORD) (COMP) (TY B) (CL3)
		SY	CY	CY
1 OF 8	1	86	8	0
1 OF 8	2	46	0	64
1 OF 8	3	46	0	62
2 OF 8	4	73	7	0
2 OF 8	5	46	0	40
2 OF 8	6	46	14	0
2 OF 8	7	46	2	10
3 OF 8	8	139	23	0
3 OF 8	9	50	7	0
3 OF 8	10	32	1	0
4 OF 8	11	32	6	0
4 OF 8	12	125	68	0
4 OF 8	13	73	15	0
4 OF 8	14	403	5	117
5 OF 8	15	50	12	0
5 OF 8	16	71	10	0
6 OF 8	17	121	2	4
6 OF 8	18	178	47	0
6 OF 8	19	106	12	0
6 OF 8	20	96	26	0
6 OF 8	21	99	18	0
7 OF 8	22	109	35	0
7 OF 8	23	90	19	0
TOTAL		2163	337	297

*FOR CONTRACTOR'S INFORMATION ONLY

NO.	REVISION	BY	DATE
CO 1	UPDATED SBFR PROFILE	AJW	12/08/04

© 2004

CP&Y Chiang, Patel & Yerby, Inc.

Texas Department of Transportation

SH 29

ROADWAY QUANTITIES SUMMARY SHEET

Designed:	JWP	FED. ROAD DIV. NO.	STATE	FEDERAL AID PROJECT NO.				SHEET NO.
Checked:	JJR	6	TEXAS	CC 337-1-29				
Drawn:	JWP	STATE DIST. NO.	COUNTY	CONTROL NO.	SECTION NO.	JOB NO.		HIGHWAY NO.
Checked:	JJR	14	WILLIAMSON	0337	01	029		SH 29

TRAFFIC CONTROL SUMMARY

SHEET NO.	0502 0501 BARR SIGNS & TRAFF HANDLE	0508 0503 CONSTRUCT DETOURS (CL 3)	0512 0536 PORT CTB (LOW PRF TY 2) (MOVE & RESET)	0512 0545 PORT CTB (LOW PRF TY 1) (REMOVE)	0512 0546 PORT CTB (LOW PRF TY 1) (FURN & INSTL)	0512 0547 PORT CTB (LOW PRF TY 2) (FURN & INSTL)	0512 0548 PORT CTB (LOW PRF TY 1) (MOVE & RESET)	0512 0549 PORT CTB (LOW PRF TY 2) (REMOVE)	0662 0501 WRK ZN PAV MRK REMOV (W) (4") (SLD)	0662 0502 WRK ZN PAV MRK REMOV (W) (4") (BRK)	0662 0507 WRK ZN PAV MRK REMOV (W) (8") (SLD)	0662 0511 WRK ZN PAV MRK REMOV (W) (24") (SLD)	0662 0512 WRK ZN PAV MRK REMOV (W) (ARROW)	0662 0516 WRK ZN PAV MRK REMOV (W) (WORD)	0662 0523 WRK ZN PAV MRK REMOV (Y) (4") (SLD)	0662 0524 WRK ZN PAV MRK REMOV (Y) (4") (BRK)	0662 0549 WRK ZN PAV MRK NON-REMOV (W) (4") (SLD)	0662 0550 WRK ZN PAV MRK NON-REMOV (W) (4") (BRK)
	MO	SY	LF	LF	LF	LF	LF	LF	LF	LF	LF	LF	EA	EA	LF	LF	LF	LF
PHASE 1, STEP 1																		
1 OF 7		0	0	0	0	0	0	0	0	0	0	0	0	0	0	0	0	0
2 OF 7		562	0	0	230	20	0	0	0	0	0	0	0	0	0	0	0	0
3 OF 7		309	0	0	30	20	0	0	0	0	0	0	0	0	0	0	0	0
4 OF 7		327	0	0	160	40	0	0	0	0	0	0	0	0	0	0	0	0
5 OF 7		0	0	0	0	0	0	0	0	0	0	0	0	0	0	0	0	0
6 OF 7		0	0	0	160	40	0	0	0	0	0	0	0	0	0	0	0	0
7 OF 7		0	0	0	0	0	0	0	0	0	0	0	0	0	0	0	0	0
SUBTOTAL		1198	0	0	580	120	0	0	0	0	0	0	0	0	0	0	0	0
PHASE 1, STEP 2																		
1 OF 7		0	0	0	0	0	0	0	570	0	0	0	0	0	1140	285	0	0
2 OF 7		0	0	0	586	20	0	0	884	0	0	0	0	0	784	196	1186	0
3 OF 7		0	0	0	994	40	0	0	0	0	0	0	0	0	0	0	1494	0
4 OF 7		0	0	0	880	80	0	0	0	0	0	0	0	0	0	0	1020	0
5 OF 7		0	0	0	790	120	0	0	0	0	0	0	0	0	0	0	910	0
6 OF 7		0	0	0	410	20	0	0	203	118	293	47	3	3	824	0	431	0
7 OF 7		0	0	0	0	0	0	0	3	1	3	0	0	0	6	0	0	0
SUBTOTAL		0	0	0	3660	280	0	0	1660	119	296	47	3	3	2754	481	5041	0
PHASE 1, STEP 3																		
1 OF 1		0	40	0	0	0	120	0	0	0	0	0	0	0	0	0	816	0
SUBTOTAL		0	40	0	0	0	120	0	0	0	0	0	0	0	0	0	816	0
PHASE 2, STEP 1																		
1 OF 7		0	0	0	0	0	0	0	0	0	0	0	0	0	0	0	570	142
2 OF 7		0	60	740	0	0	585	60	0	0	0	0	0	0	0	0	1045	42
3 OF 7		0	0	1100	0	0	1100	60	0	0	0	0	0	0	0	0	1100	0
4 OF 7		0	40	890	0	0	890	100	0	0	0	0	0	0	0	0	930	300
5 OF 7		0	40	935	0	0	935	160	0	0	0	0	0	0	0	0	769	0
6 OF 7		0	20	575	0	0	430	20	0	0	0	0	0	0	0	0	1594	108
7 OF 7		0	0	0	0	0	0	0	0	0	0	0	0	0	0	0	0	1
SUBTOTAL		0	160	4240	0	0	3940	400	0	0	0	0	0	0	0	0	6008	593
TOTAL	10	1198	200	4240	4240	400	4060	400	1660	119	296	47	3	3	2754	481	11865	593

NO.	REVISION	BY	DATE

Chiang, Patel & Yerby, Inc.

© 2004

Texas Department of Transportation

SH 29

ROADWAY QUANTITIES SUMMARY SHEET

		FED. ROAD DIV. NO.	STATE	FEDERAL AID PROJECT NO.				SHEET NO.
Designed:	AJW	6	TEXAS	CC 337-1-29				6
Checked:	JWP							
Drawn:	DHS	STATE DIST. NO.	COUNTY	CONTROL NO.	SECTION NO.	JOB NO.	HIGHWAY NO.	
Checked:	JJR	14	WILLIAMSON	0337	01	029	SH 29	

TRAFFIC CONTROL SUMMARY

SHEET NO.	0662 0553 WRK ZN PAV MRK NON-REMOV (W) (8") (SLD)	0662 0554 WRK ZN PAV MRK NON-REMOV (W) (8") (LNDP)	0662 0557 WRK ZN PAV MRK NON-REMOV (W) (24") (SLD)	0662 0558 WRK ZN PAV MRK NON-REMOV (W) (ARROW)	0662 0562 WRK ZN PAV MRK NON-REMOV (W) (WORD)	0662 0569 WRK ZN PAV MRK NON-REMOV (Y) (4") (SLD)	0662 0570 WRK ZN PAV MRK NON-REMOV (Y) (4") (BRK)	0662 0576 WRK ZN PAV MRK NON-REMOV (Y) (24") (SLD)	0672 0507 RAIS PAV MRKR CL B (REFL) TY I-C	0672 0509 RAIS PAV MRKR CL B (REFL) TY II-A-A	0677 0501 ELIM EXT PAV MRK & MRKR (4")	0677 0503 ELIM EXT PAV MRK & MRKR (8")	0677 0507 ELIM EXT PAV MRK & MRKR (ARROW)	0677 0508 ELIM EXT PAV MRK & MRKR (WORD)	0681 0501 TEMP TRAF SIGNAL FOR CONSTRUCT	*3146 0501 HOT MIX (TY A)	*3146 0502 HOT MIX (TY B)	*3146 0520 HOT MIX (TY C) (SURF)	6670 0503 PORT CHANGE MES SGN (TY I OR TY II)
	LF	LF	LF	EA	EA	LF	LF	LF	EA	EA	LF	LF	EA	EA	EA	TON	TON	TON	DAY
PHASE 1, STEP 1																			
1 OF 7	0	0	0	0	0	0	0	0	0	0	0	0	0	0		0	0	0	
2 OF 7	0	0	0	0	0	0	0	0	0	0	0	0	0	0		124	124	62	
3 OF 7	0	0	0	0	0	0	0	0	0	0	0	0	0	0		68	68	34	
4 OF 7	0	0	0	0	0	0	0	0	0	0	0	0	0	0		72	72	36	
5 OF 7	0	0	0	0	0	0	0	0	0	0	0	0	0	0		0	0	0	
6 OF 7	0	0	0	0	0	0	0	0	0	0	0	0	0	0		0	0	0	
7 OF 7	0	0	0	0	0	0	0	0	0	0	0	0	0	0		0	0	0	
SUBTOTAL	0	0	0	0	0	0	0	0	0	0	0	0	0	0		264	264	132	42
PHASE 1, STEP 2																			
1 OF 7	0	0	0	0	0	0	0	0	0	29	1467	0	0	0		0	0	0	
2 OF 7	0	0	0	0	0	1189	0	0	0	20	1800	0	0	0		0	0	0	
3 OF 7	0	0	0	0	0	1280	320	83	0	32	1710	0	0	0		0	0	0	
4 OF 7	0	0	0	0	0	2481	525	0	0	53	1650	0	0	0		0	0	0	
5 OF 7	0	0	0	0	0	2200	550	0	0	55	1650	0	0	0		0	0	0	
6 OF 7	423	0	13	0	0	1073	117	0	12	12	1310	292	4	4		0	0	0	
7 OF 7	0	0	0	0	0	0	0	0	0	0	0	0	0	0		0	0	0	
SUBTOTAL	423	0	13	0	0	8223	1512	83	12	201	9587	292	4	4		0	0	0	42
PHASE 1, STEP 3																			
1 OF 1	0	0	44	0	0	1353	0	0	0	0	0	0	0	0		0	0	0	
SUBTOTAL	0	0	44	0	0	1353	0	0	0	0	0	0	0	0		0	0	0	42
PHASE 2, STEP 1																			
1 OF 7	0	0	0	0	0	1140	285	0	15	29	0	0	0	0		0	0	0	
2 OF 7	0	0	0	0	0	2010	503	0	5	51	0	0	0	0		0	0	0	
3 OF 7	0	0	0	0	0	2200	550	0	0	55	0	0	0	0		0	0	0	
4 OF 7	898	0	138	8	8	2248	315	0	30	29	0	0	0	0		0	0	0	
5 OF 7	596	46	98	7	7	1950	338	0	7	20	0	0	0	0		0	0	0	
6 OF 7	428	100	58	3	3	2405	98	0	11	10	0	0	0	0		0	0	0	
7 OF 7	3	0	0	0	0	6	0	0	0	0	0	0	0	0		0	0	0	
SUBTOTAL	1925	146	294	18	18	11959	2088	0	68	194	0	0	0	0		0	0	0	42
TOTAL	2348	146	351	18	18	21535	3599	83	80	395	9587	292	4	4	2	264	264	132	168

* FOR CONTRACTOR'S INFORMATION ONLY

NO.	REVISION	BY	DATE

CP&Y Chiang, Patel & Yerby, Inc.

© 2004

Texas Department of Transportation

SH 29

ROADWAY QUANTITIES SUMMARY SHEET

		FED. ROAD DIV. NO.	STATE	FEDERAL AID PROJECT NO.			SHEET NO.
Designed:	AJW	6	TEXAS	CC 337-1-29			?
Checked:	JWP	STATE DIST. NO.	COUNTY	CONTROL NO.	SECTION NO.	JOB NO.	HIGHWAY NO.
Drawn:	DHS	14	WILLIAMSON	0337	01	029	SH 29
Checked:	JJR						

SIGNING, STRIPING, DELINEATION & MBGF SUMMARY

SHEET NO.	0666 0501 REFL PAV MRK (W) (4") (SLD)		0666 0502 REFL PAV MRK (W) (4") (BRK)		0666 0503 REFL PAV MRK (W) (4") (DOT)		0666 0506 REFL PAV MRK (W) (8") (SLD)		0666 0508 REFL PAV MRK (W) (8") (LNDP)		0666 0509 REFL PAV MRK (W) (12") (SLD)		0666 0512 REFL PAV MRK (W) (24") (SLD)		0666 0513 REFL PAV MRK (W) (ARROW)		0666 0517 REFL PAV MRK (W) (WORD)		0666 0524 REFL PAV MRK (Y) (4") (SLD)		0666 0525 REFL PAV MRK (Y) (4") (BRK)	
	TY I	TY II	TY I	TY II	TY I	TY II	TY I	TY II	TY I	TY II	TY I	TY II	TY I	TY II	TY I	TY II	TY I	TY II	TY I	TY II	TY I	TY II
	LF	LF	LF	LF	LF	LF	LF	LF	LF	LF	LF	LF	LF	LF	LF	LF	LF	LF	LF	LF	LF	LF
1 OF 8	1140	1140	285	285	0	0	0	0	0	0	0	0	0	0	0	0	0	0	1140	1140	285	285
2 OF 8	990	990	550	550	0	0	0	0	0	0	0	0	0	0	0	0	0	0	2200	2200	550	550
3 OF 8	0	0	550	550	0	0	240	240	0	0	0	0	0	0	3	3	3	3	1380	1380	66	66
4 OF 8	0	0	475	475	99	99	1450	1450	0	0	435	435	130	130	9	9	9	9	0	0	0	0
5 OF 8	0	0	488	488	0	0	1810	1810	19	19	403	403	542	542	10	10	6	6	0	0	0	0
6 OF 8	0	0	506	506	18	18	1595	1595	121	121	371	371	329	329	8	8	8	8	710	710	0	0
7 OF 8	0	0	92	92	0	0	330	330	0	0	301	301	231	231	3	3	1	1	91	91	0	0
8 OF 8	0	0	363	363	0	0	1466	1466	0	0	420	420	616	616	11	11	11	11	679	679	0	0
TOTAL	2130	2130	3309	3309	117	117	6891	6891	140	140	1930	1930	1848	1848	44	44	38	38	6200	6200	901	901

SIGNING, STRIPING, DELINEATION & MBGF SUMMARY

SHEET NO.	0666 0529 REFL PAV MRK (Y) (8") (SLD)		0666 0532 REFL PAV MRK (Y) (24") (SLD)		0672 0507 RAIS PAV MRKR CL B (REFL) TY I-C	0672 0509 RAIS PAV MRKR CL B (REFL) TY II-A-A	0672 0510 RAIS PAV MRKR CL B (REFL) TY II-C-R	0658 0501 DEL ASM TY A (D-SW)	0658 0580 OBJ MRK ASM TY 4 (OM-4R)	0636 0501 ALUM SIGNS (TY A)	0644 0608 SM RD SGN ASSM TY TWT (1) UA (P)	0644 0610 SM RD SGN ASSM TY TWT (1) UA (T)	0644 0614 SM RD SGN ASSM TY 10BWG(1) SA (P)	0644 0615 SM RD SGN ASSM TY 10BWG(1) SA (P-BM)	0644 0619 SM RD SGN ASSM TY 10BWG(1) SA (U)	0542 0501 REMOVE METAL BEAM GUARD FENCE	0542 0503 REMOVE TERMINAL ANCHOR SECTION	0560 0501 MAILBOX INSTALL (SINGLE)	5530 0501 DEAD END ROADWAY BARRICADE	0540 0504 MTL BEAM GD FEN (BLKOUT) (12 GA)	5819 0501 SINGLE GUARDRAIL TERM (TY I)	0432 0501 RIPRAP (CONC) (CL B)
	TY I	TY II	TY I	TY II																		
	LF	LF	LF	LF	EA	EA	EA	EA	EA	SF	EA	EA	EA	EA	EA	LF	EA	EA	LF	LF	EA	CY
1 OF 8	0	0	0	0	14	29	0	0	0	0	0	0	0	0	0	0	0	1	0	0	0	0
2 OF 8	0	0	0	0	28	55	0	6	0	0	3	0	0	0	0	100	1	0	0	335	2	6
3 OF 8	0	0	292	292	11	63	40	2	0	0	3	2	0	0	0	100	1	1	0	65	2	5
4 OF 8	0	0	0	0	0	0	169	0	0	19	5	2	0	0	0	0	0	5	0	0	0	2
5 OF 8	0	0	0	0	0	0	135	0	0	0	2	2	0	0	0	0	0	2	0	0	0	1
6 OF 8	187	187	155	155	21	27	170	0	0	0	6	2	3	0	2	0	0	0	0	0	0	3
7 OF 8	0	0	13	13	0	5	35	0	3	0	1	0	1	2	0	0	0	0	16	0	0	1
8 OF 8	0	0	0	0	0	20	150	0	9	0	5	0	0	2	0	0	0	0	80	0	0	2
TOTAL	187	187	460	460	74	199	699	8	12	19	25	8	4	4	2	200	2	9	96	400	4	20

EROSION CONTROL SUMMARY

SHEET NO.	0164 0537 DRILL SEED (TEMP) (COOL)	0164 0535 DRILL SEED (TEMP) (WARM)	0164 0569 DRILL SEED (PERM) (RURAL) (CLAY)	0166 0509 * FERTILIZER (13-13-13)	0168 0501 VEGETATIVE WATER	0168 0502 VEG WATERING (TEMP EROSN CONTROL)	5005 0504 ROCK FILTER DAMS (TY 2)	5005 0505 ROCK FILTER DAMS (REMOVE & REPLAC) (TY 2)	5005 0506 ROCK FILTER DAMS (REMOVE) (TY 2)	5010 0501 CONSTRUCT EXIT (TY I)	5010 0502 CONSTRUCT EXIT (REMOV & REPLAC) (TY I)	5010 0503 CONSTRUCT EXIT (REMOVE) (TYI)
	SY	SY	SY	TON	MG	MG	LF	LF	LF	SY	SY	SY
1 OF 7	1326	1326	2652	0.4	53	27	110	55	110			
2 OF 7	2694	2694	5388	0.7	108	54	0	0	0			
3 OF 7	2449	2449	4899	0.6	98	49	0	0	0			
4 OF 7	2408	2408	4815	0.6	96	48	0	0	0			
5 OF 7	3209	3209	6418	0.8	128	64	60	30	60			
6 OF 7	764	764	1529	0.2	31	15	0	0	0			
7 OF 7	483	483	966	0.1	19	10	0	0	0			
TOTAL	13333	13333	26667	3.4	533	267	170	85	170	330	440	330

* FOR CONTRACTOR'S INFORMATION ONLY

EROSION CONTROL SUMMARY

SHEET NO.	5249 0501 TEMP SEDMT CONT FENCE	5249 0502 TEMP SEDMT CONT FENCE (REMOV&REPLAC)	5249 0503 TEMP SEDMT CONT FENCE (REMOVE)	0432 0501 RIPRAP (CONC) (CL B)	0160 0506 FURN & PLACE TPSL (CL 2) (4")	5788 0501 LANDSCAPE PAVERS
	LF	LF	LF	CY	SY	SF
1 OF 7	412	206	412	151	2652	0
2 OF 7	1011	506	1011	17	5388	13805
3 OF 7	1027	514	1027	0	4899	12133
4 OF 7	1046	523	1046	0	4815	8300
5 OF 7	624	312	624	0	6418	14403
6 OF 7	845	423	845	0	1529	2973
7 OF 7	262	131	262	0	966	1441
TOTAL	5227	2614	5227	168	26667	53055

NO.	REVISION	BY	DATE

Chiang, Patel & Yerby, Inc.

© 2004

Texas Department of Transportation

SH 29

ROADWAY QUANTITIES SUMMARY SHEET

		FED. ROAD DIV. NO.	STATE	FEDERAL AID PROJECT NO.				SHEET NO.
Designed:	AJW	6	TEXAS	CC 337-1-29				8A
Checked:	JWP	STATE DIST. NO.	COUNTY	CONTROL NO.	SECTION NO.	JOB NO.	HIGHWAY NO.	
Drawn:	DHS	14	WILLIAMSON	0337	01	029	SH 29	
Checked:	JJR							

SUMMARY OF INLETS & MANHOLES

SHEET NO.	DESIGNATION	0465 0510 MANH (COMPL) (TY A)	0465 0582 INLET (COMPL) (TY II)(10')	0465 0626 INLET (COMPL) (TY II) (15')	0465 0738 INLET (COMPL) (TY IIR) (10')	0465 0739 INLET (COMPL) (TY IIR) (15')
		EA	EA	EA	EA	EA
1 OF 9	CI-160				1	
1 OF 9	CI-165				1	
2 OF 9	CI-1			1		
2 OF 9	CI-5		1			
2 OF 9	CI-10		1			
2 OF 9	CI-50				1	
3 OF 9	CI-15		1			
3 OF 9	CI-20		1			
3 OF 9	CI-40			1		
3 OF 9	CI-45			1		
3 OF 9	CI-55		1			
3 OF 9	CI-60			1		
3 OF 9	CI-65			1		
3 OF 9	CI-70				1	
3 OF 9	CI-75			1		
3 OF 9	CI-80			1		
4 OF 9	CI-85			1		
4 OF 9	CI-90			1		
4 OF 9	CI-95			1		
4 OF 9	CI-100			1		
4 OF 9	CI-120		1			
4 OF 9	CI-125			1		
4 OF 9	CI-135					1
4 OF 9	CI-140					1
5 OF 9	CI-130			1		
5 OF 9	MH-5	1				
5 OF 9	CI-145					1
5 OF 9	CI-150			1		
5 OF 9	CI-151		1			
5 OF 9	CI-155		1			
6 OF 9	CI-25			1		
6 OF 9	CI-30A		1			
6 OF 9	CI-30		1			
6 OF 9	CI-35			1		
7 OF 9	CI-105			1		
7 OF 9	CI-110			1		
7 OF 9	CI-115		1			
	TOTAL	1	11	18	4	3

SUMMARY OF EXISTING DRAINAGE STRUCTURES

SHEET NO.	STATION	OFFSET	DESCRIPTION	DISPOSITION	0496 0549 REMOVE OLD STR (PIPE) (BOX CULV)	0496 0504 REMOVE OLD STR PIPE
					LF	LF
1 OF 9	145+16.83	22.00' LT	CULVERT 1	TO BE EXTENDED	20	
1 OF 9	145+16.83	43.00' RT	CULVERT 1	TO BE EXTENDED	2	
2 OF 9	150+23.90	30.41' LT	DRIVEWAY CULVERT	TO BE REMOVED		25
3 OF 9	159+50.51	60.65' LT	DRIVEWAY CULVERT	TO BE REMOVED		19
3 OF 9	160+20.92	32.51' LT	DRIVEWAY CULVERT	TO BE REMOVED		25
3 OF 9	159+81.93	52.60' RT	DRIVEWAY CULVERT	TO BE REMOVED		25
3 OF 9	162+96.57	32.20' LT	DRIVEWAY CULVERT	TO BE REMOVED		26
3 OF 9	165+17.02	32.15' LT	DRIVEWAY CULVERT	TO BE REMOVED		24
3 OF 9	166+84.87	32.30' LT	DRIVEWAY CULVERT	TO BE REMOVED		24
4 OF 9	168+69.22	32.23' LT	DRIVEWAY CULVERT	TO BE REMOVED		24
4 OF 9	169+93.50	32.28' LT	DRIVEWAY CULVERT	TO BE REMOVED		36
4 OF 9	170+30.72	50.31' RT	DRIVEWAY CULVERT	TO BE REMOVED		27
4 OF 9	171+83.29	32.62' LT	DRIVEWAY CULVERT	TO BE REMOVED		22
4 OF 9	172+47.80	32.29' LT	DRIVEWAY CULVERT	TO BE REMOVED		22
4 OF 9	173+17.89	31.90' LT	DRIVEWAY CULVERT	TO BE REMOVED		22
4 OF 9	174+28.28	32.37' LT	DRIVEWAY CULVERT	TO BE REMOVED		22
4 OF 9	175+90.35	32.61' LT	DRIVEWAY CULVERT	TO BE REMOVED		22
4 OF 9	16+23.58	51.34' RT	DRIVEWAY CULVERT	TO BE REMOVED		28
5 OF 9	181.74.97	51.29' RT	DRIVEWAY CULVERT	TO BE REMOVED		46
5 OF 9	182+93.91	42.93' RT	DRIVEWAY CULVERT	TO BE REMOVED		137
5 OF 9	182+98.10	41.06' LT	DRIVEWAY CULVERT	TO BE REMOVED		26
	TOTAL				22	602

NO.	REVISION	BY	DATE

CP&Y Chiang, Patel & Yerby, Inc.

© 2004

Texas Department of Transportation

SH 29

DRAINAGE SUMMARY

		FED. ROAD DIV. NO.	STATE	FEDERAL AID PROJECT NO.				SHEET NO.
Designed:	AJW	6	TEXAS	CC 337-1-29				9
Checked:	JWP	STATE DIST. NO.	COUNTY	CONTROL NO.	SECTION NO.	JOB NO.	HIGHWAY NO.	
Drawn:	DHS	14	WILLIAMSON	0337	01	029	SH 29	
Checked:	JJR							

SUMMARY OF STORM SYSTEMS & CULVERTS

SHEET NO.	DESIGNATION	FROM	TO	0400 0501 STRUCTURAL EXCAVATION	0400 0504 STRUCTURAL EXCAVATION (CULV SMALL)	0402 0501 TRENCH EXCAVATION PROTECTION	0460 0503 CMP (GAL STL) (18 IN)	0464 0519 RC PIPE (CL IV) (18")	0464 0520 RC PIPE (CL IV) (24")	0464 0521 RC PIPE (CL IV) (30")	0464 0522 RC PIPE (CL IV) (36")	0464 0523 RC PIPE (CL IV) (42")	0464 0524 RC PIPE (CL IV) (48")	0462 0510 CONC BOX CULV (5FT X 6FT)	0466 0507 WINGWALL (PW-0) (H = 6 FT)	0467 0680 SAFETY END TRT. TY (II) 18" RCP (6:1)	0467 0688 SAFETY END TRT. TY (II) 18" CMP (4:1)
				CY	CY	LF	LF	LF	LF	LF	LF	LF	LF	LF	EA	EA	EA
2 OF 9	LINE A	CI-50	CI-1	77		69		84									
2 OF 9	LINE A	CI-1	CI-5	106		121			92								
2 OF 9	LINE A	CI-5	CI-10	148		125				115							
3 OF 9	LINE A	CI-10	CI-15	213		150					140						
3 OF 9	LINE A	CI-15	CI-20	122		85					75						
3 OF 9	LINE A	CI-20	JB-1	371		211						204					
3 OF 9	LINE A	JB-1	CI-40	52		20							10				
3 OF 9	LINE A	CI-40	CI-45	511		174							159				
3 OF 9	LINE A	CI-45	CI-70	271		101							96				
3 OF 9	LINE A	CI-70	OUT	110		27							24				
3 OF 9	LINE B	CI-75	CI-80	101					115								
3 OF 9	LINE B	CI-80	CI-85	161		142			165								
4 OF 9	LINE B	CI-85	CI-90	165		105					89						
4 OF 9	LINE B	CI-90	CI-95	317		205					189						
4 OF 9	LINE B	CI-95	CI-100	276		165						150					
4 OF 9	LINE B	CI-100	JB-2	603		184							175				
4 OF 9	LINE B	JB-2	CI-120	72		22							17				
4 OF 9	LINE B	CI-120	CI-125	737		265							252				
5 OF 9	LINE B	CI-125	CI-130	1062		336							320				
5 OF 9	LINE B	CI-130	MH-5	275		102							97				
5 OF 9	LINE B	MH-5	OUT	108		26							24				
6 OF 9	LAT A-2	CI-30	CI-30A	177		224		213									
6 OF 9	LAT A-2	CI-30A	CI-25	271		293			280								
6 OF 9	LAT A-2	CI-25	CI-35	137		102				97							
6 OF 9	LAT A-2	CI-35	JB-1	104		75				70							
7 OF 9	LAT B-3	CI-110	CI-105	247		290		274									
7 OF 9	LAT B-3	CI-105	CI-115	91		78			73								
7 OF 9	LAT B-3	CI-115	JB-2	93		71			70								
8 OF 9	LAT A-3	CI-55	CI-60	127				176									
8 OF 9	LAT A-3	CI-60	CI-65	59		4		95									
8 OF 9	LAT A-3	CI-65	JB-1A	327		256		246									
8 OF 9	LINE C	CI-160	OUT					6									
8 OF 9	LINE D	CI-165	OUT					5									
9 OF 9	LAT B-1	CI-135	CI-85	63		41		84									
9 OF 9	LAT B-2	CI-140	CI-100	65		55		84									
9 OF 9	LAT B-5	CI-145	MH-5	46		67		45									
9 OF 9	LINE E	CI-150	CI-151	50				137									
9 OF 9	LINE E	CI-151	OUT	28				85								1	
9 OF 9	LAT B-6	CI-155	OUT	28				99								1	
1 OF 1	CULVERT #1				27									37	2		
1 OF 9	DRWY CULV #1							80								2	
1 OF 1	DETOUR "A"						39										2
TOTAL				7771	27	4191	39	1713	795	282	493	354	1174	37	2	4	2

NO.	REVISION	BY	DATE

CP&Y Chiang, Patel & Yerby, Inc.

© 2004

Texas Department of Transportation

SH 29

DRAINAGE SUMMARY

		FED. ROAD DIV. NO.	STATE	FEDERAL AID PROJECT NO.				SHEET NO.
Designed:	AJW	6	TEXAS	CC 337-1-29				10
Checked:	JWP	STATE DIST. NO.	COUNTY	CONTROL NO.	SECTION NO.	JOB NO.	HIGHWAY NO.	
Drawn:	DHS	14	WILLIAMSON	0337	01	029	SH 29	
Checked:	JJR							

SUMMARY OF SMALL SIGNS

SM RD SGN ASSM TY XXXXX(X)XX(X-XXXX)

PLAN SHEET NO.	SIGN NO.	SIGN NOMENCLATURE	SIGN TEXT	SIGN DIMENSIONS	REFLECTIVE SHEETING	PLYWOOD TYPE A	ALUMINUM TYPE A	ALUMINUM TYPE G	Post Type: FRP = Fiberglass, TWT = Thin-Wall, 10BWG = 10 BWG, S80 = Sch 80	Posts (1 or 2)	Anchor Type: UA = Univer-Conc, UB = Univer-Bolt, WA = Wedge-Conc, SA = Slip-Conc, SB = Slip-Bolt	Mounting Designation: P = Prefab. "Plain", T = Prefab. "T", U = Prefab. "U"	Mounting Designation: 1EXT or 2EXT = # of Ext., BM = Extruded Wind Beam, WC = 1.12 #/ft Wing Chan., EXAL = Extruded Alum. signs	RIPRAP (CONC) (CL B) (VEG CONT) CY
2	1	R2-5A	REDUCE SPEED AHEAD	24" X 30"	C		1		TWT	1	UA	P		0.25
	2	R3-9	BEGIN	24" X 8"	C		1		TWT	1	UA	P		0.25
		R2-1	SPEED LIMIT XX	24" X 30"	C		1							
	3	R3-9	BEGIN	24" X 8"	C		1		TWT	1	UA	P		0.25
		R2-1	SPEED LIMIT XX	24" X 30"	C		1							
3	1	R3-9b	CENTER LANE TWO WAY LEFT TURN ONLY	24" X 36"	C		1		TWT	1	UA	P		0.25
		R3-9	END	24" X 8"	C		1							
	2	R3-9b	CENTER LANE TWO WAY LEFT TURN ONLY	24" X 36"	C		1		TWT	1	UA	P		0.25
		R3-9	BEGIN	24" X 8"	C		1							
	3	R6-1R	ONE WAY →	36" X 12"	C		1		TWT	1	UA	T		0.25
	4	R3-7R	RIGHT LANE MUST TURN RIGHT	30" X 30"	C		1		TWT	1	UA	P		0.25
	5	R6-1R	ONE WAY →	36" X 12"	C		1		TWT	1	UA	T		0.25
4	1	R3-7R	RIGHT LANE MUST TURN RIGHT	30" X 30"	C		1		TWT	1	UA	P		0.25
	2	R3-8	DUEL LEFT TURN ONLY LANE	30" X 30"	C		1		ATTACHED TO MAST ARM ASSEMBLY					
		D3-1	CR 365 W	16" X 96"					ATTACHED TO MAST ARM ASSEMBLY					
	3	R2-1	SPEED LIMIT XX	30" X 30"	C		1		TWT	1	UA	P		0.25
	4	R2-1	SPEED LIMIT XX	30" X 30"	C		1		TWT	1	UA	P		0.25
	5	R6-1R	ONE WAY →	36" X 12"	C		1		TWT	1	UA	T		0.25
	6	R6-1R	ONE WAY →	36" X 12"	C		1		TWT	1	UA	T		0.25
	7	R3-7R	RIGHT LANE MUST TURN RIGHT	30" X 30"	C		1		TWT	1	UA	P		0.25
	8	R3-7R	RIGHT LANE MUST TURN RIGHT	30" X 30"	C		1		TWT	1	UA	P		0.25
	9	R3-8	DUEL LEFT TURN ONLY LANE	30" X 30"	C		1		ATTACHED TO MAST ARM ASSEMBLY					
		D3-1	SH 29	16" X 96"					ATTACHED TO MAST ARM ASSEMBLY					
	10	R3-8	DUEL LEFT TURN ONLY LANE	30" X 30"	C		1		ATTACHED TO MAST ARM ASSEMBLY					
5	1	R6-1R	ONE WAY →	36" X 12"	C		1		TWT	1	UA	T		0.25
	2	R6-1R	ONE WAY →	36" X 12"	C		1		TWT	1	UA	T		0.25
	3	R3-7R	RIGHT LANE MUST TURN RIGHT	30" X 30"	C		1		TWT	1	UA	P		0.25
	4	R3-7R	RIGHT LANE MUST TURN RIGHT	30" X 30"	C		1		TWT	1	UA	P		0.25
6	1	R6-1R	ONE WAY →	36" X 12"	C		1		TWT	1	UA	T		0.25
	2	R6-1R	ONE WAY →	36" X 12"	C		1		TWT	1	UA	T		0.25
	3	R3-7R	RIGHT LANE MUST TURN RIGHT	30" X 30"	C		1		TWT	1	UA	P		0.25
		PLAQUE	500 FT.	30" X 12"	C		1							
	4	M3-3B	SOUTH	24" X 12"	C		1		10BWG	1	SA	P		0.25
		M1-1B2	INTERSTATE 35	24" X 24"	C		1							
		M6-1B	←	24" X 12"	C		1							
	5	W11A-2	PEDESTRIAN CROSSWALK	30" X 30"	E		1		TWT	1	UA	P		0.25
	6	M3-2	EAST	24" X 12"	C		1		10BWG	1	SA	U		0.25
		M3-4	WEST	24" X 12"	C		1							
		M1-6T	SH 29	24" X 24"	C		1							
		M1-6T	SH 29	24" X 24"	C		1							
		M6-1	←	24" X 12"	C		1							
		M6-1	→	24" X 12"	C		1							
	7	R3-7R	RIGHT LANE MUST TURN RIGHT	30" X 30"	C		1		TWT	1	UA	P		0.25
	8	R3-7R	RIGHT LANE MUST TURN RIGHT	30" X 30"	C		1		TWT	1	UA	P		0.25
	9	M3-1B	NORTH	24" X 12"	C		1		10BWG	1	SA	U		0.25
		M3-3B	SOUTH	24" X 12"	C		1							
		M1-1B2	INTERSTATE 35	24" X 24"	C		1							
		M1-1B2	INTERSTATE 35	24" X 24"	C		1							
		M6-3B	↑	24" X 12"	C		1							
		M6-1B	→	24" X 12"	C		1							
	10	W11A-2	PEDESTRIAN CROSSWALK	30" X 30"	E		1		TWT	1	UA	P		0.25
	11	R1-2	YIELD	30" X 30" X 30"	C		1		TWT	1	UA	P		0.25
	12	D3-1	SH 29	16" X 96"					ATTACHED TO MAST ARM ASSEMBLY					
	13	D3-1	IH 35 SB	16" X 96"					ATTACHED TO MAST ARM ASSEMBLY					
	14	R3-8VAR	INTERSECTION LANE CONTROL SIGN	48" X 30"	C		1		10BWG	1	SA	P		0.25
	15	R3-8VAR	INTERSECTION LANE CONTROL SIGN	48" X 30"	C		1		10BWG	1	SA	P		0.25
													TOTAL	8 CY

ALUMINUM SIGN BLANKS (TYPE A)

Square Ft.	Min. Thickness
Less than 7.5	0.080"
7.5 to 15	0.100"
Greater than 15	0.125"

Sign supports shall be located as shown on the plans except that the Engineer may shift the sign supports, within design guidelines, where necessary to secure a more desirable location or to avoid conflict with utilities. Unless otherwise shown on the plans, the Contractor shall stake and the Engineer will verify all sign support locations.

Reflective sheeting will be designated as:

Type C - High Specific Intensity
Type D - Non-fluorescent Prismatic
Type E - Fluorescent Prismatic

© 2004

Texas Department of Transportation

SH 29

SUMMARY OF SMALL SIGNS

CP&Y Chiang, Patel & Yerby, Inc.

NO.	REVISION	BY	DATE

Designed: GJT	DIST. COUNTY	FEDERAL AID PROJECT NO.	SHEET NO.
Checked: SML	6 TEXAS	CC 337-1-29	
Drawn: GJT	DIST. No. COUNTY	CONTROL SECTION JOB NO.	HIGHWAY NO.
Checked: SML	14 WILLIAMSON	0337 01 029	SH 29

1 OF 2

...\wa3\west\common\533wss01.100 09/22/2004 07:48:29 AM

SUMMARY OF SMALL SIGNS

SM RD SGN ASSM TY XXXXX(X)XX(X-XXXX)

PLAN SHEET NO.	SIGN NO.	SIGN NOMENCLATURE	SIGN TEXT	SIGN DIMENSIONS	REFLECTIVE SHEETING	PLYWOOD TYPE A	ALUMINUM TYPE A	ALUMINUM TYPE G	Post Type: FRP = Fiberglass, TWT = Thin-Wall, 10BWG = 10 BWG, S80 = Sch 80	Posts (1 or 2)	Anchor Type: UA = Univer-Conc, UB = Univer-Bolt, WA = Wedge-Conc, SA = Slip-Conc, SB = Slip-Bolt	Mounting Designation: P = Prefab. "Plain", T = Prefab. "T", U = Prefab. "U"	Mounting Designation: 1EXT or 2EXT = # of Ext., BM = Extruded Wind Beam, WC = 1.12 #/ft Wing Chan., EXAL = Extruded Alum. signs	RIPRAP (CONC) (CL B) (VEG CONT) CY
7	1	R1-1	STOP	30" X 30"	C		1		10BWG	1	SA	P	BM	0.25
		D3-1	SH 29	12" X 36"	C		1							
		D3-1	CR 265 E	12" X 48"	C		1							
	2	R1-1	STOP	30" X 30"	C		1		10BWG	1	SA	P	BM	0.25
		D3-1	SH 29	12" X 36"	C		1							
		D3-1	CR 265 E	12" X 48"	C		1							
		R3-8	INTERSECTION LANE CONTROL SIGN	30" X 48"	C		1							
	3	R3-8	INTERSECTION LANE CONTROL SIGN	30" X 48"	C		1		10BWG	1	SA	P		0.25
	4	W1-1R	WARNING RIGHT TURN	30" X 30"	E		1		TWT	1	UA	P		0.25
		W13-1	ADVISORY SPEED LIMIT	18" X 18"	E		1							
8	1	R1-1	STOP	30" X 30"	C		1		10BWG	1	SA	P	BM	0.25
		R6-1R	ONE WAY →	36" X 12"	C		1							
	2	R3-7R	RIGHT LANE MUST TURN RIGHT	30" X 30"	C		1		TWT	1	UA	P		0.25
	3	R3-7R	RIGHT LANE MUST TURN RIGHT	30" X 30"	C		1		TWT	1	UA	P		0.25
	4	R3-7R	RIGHT LANE MUST TURN RIGHT	30" X 30"	C		1		TWT	1	UA	P		0.25
	5	R3-7R	RIGHT LANE MUST TURN RIGHT	30" X 30"	C		1		TWT	1	UA	P		0.25
	6	R3-8	INTERSECTION LANE CONTROL SIGN	30" X 30"	C		1		TWT	1	UA	P		0.25
	7	R1-1	STOP	30" X 30"	C		1		10BWG	1	SA	P	BM	0.25
		D3-1	CR 265	12" X 42"	C		1							
		D3-1	CR 265 W	12" X 48"	C		1							
													TOTAL	2.75 CY

ALUMINUM SIGN BLANKS (TYPE A)

Square Ft.	Min. Thickness
Less than 7.5	0.080"
7.5 to 15	0.100"
Greater than 15	0.125"

Sign supports shall be located as shown on the plans except that the Engineer may shift the sign supports, within design guidelines, where necessary to secure a more desirable location or to avoid conflict with utilities. Unless otherwise shown on the plans, the Contractor shall stake and the Engineer will verify all sign support locations.

Reflective sheeting will be designated as:

Type C - High Specific Intensity
Type D - Non-fluorescent Prismatic
Type E - Fluorescent Prismatic

© 2004

CP&Y Chiang, Patel & Yerby, Inc.

Texas Department of Transportation

SH 29

SUMMARY OF SMALL SIGNS

NO.	REVISION	BY	DATE

Designed:	GJT	FED. ROAD DIV. NO.	STATE	FEDERAL AID PROJECT NO.	SHEET NO.
Checked:	SML	6	TEXAS	CC 337-1-29	12
Drawn:	GJT	DIST. NO.	COUNTY	CONTROL SECTION NO.	JOB NO.	HIGHWAY NO.
Checked:	SML	14	WILLIAMSON	0337	01	029 SH 29

2 OF 2

...\wa3\west\common\533mss02.100 09/22/2004 07:48:29 AM

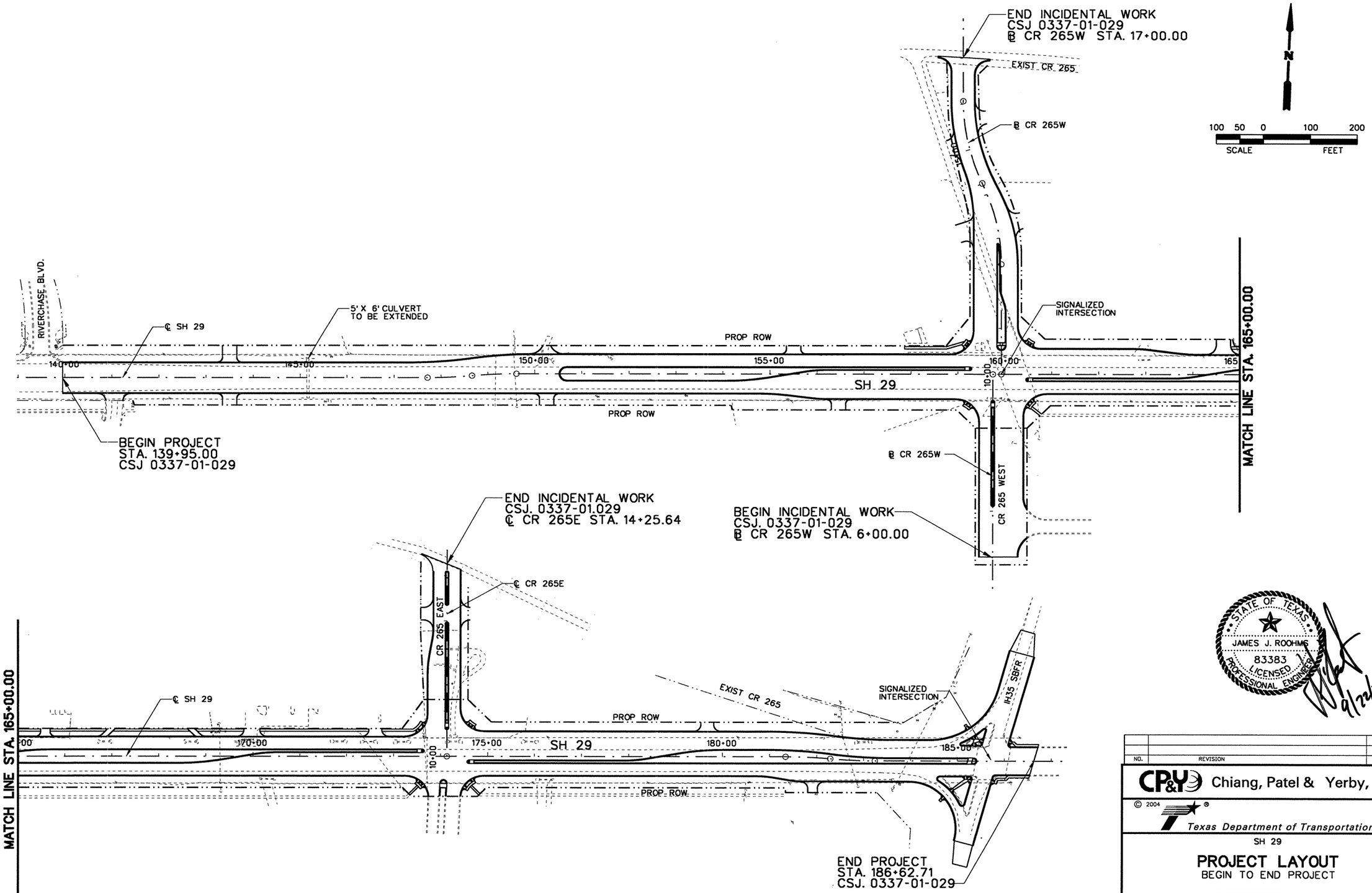

STATE OF TEXAS
JAMES J. ROOHMS
83383
LICENSED
PROFESSIONAL ENGINEER
9/24/2004

NO.	REVISION	BY	DATE

CP&Y Chiang, Patel & Yerby, Inc.

© 2004

Texas Department of Transportation

SH 29

PROJECT LAYOUT
BEGIN TO END PROJECT

		FED. ROAD DIV. NO.	STATE	FEDERAL AID PROJECT NO.				SHEET NO.
Designed:	TWL	6	TEXAS	CC 337-1-29				13
Checked:	JJR	STATE DIST. NO.	COUNTY	CONTROL NO.	SECTION NO.	JOB NO.	HIGHWAY NO.	
Drawn:	TWL	14	WILLIAMSON	0337	01	029	SH 29	
Checked:	JJR							

1 OF 1

...\wa3\WEST\Common\533Wgl01.200 9/22/2004 6:11:19 AM

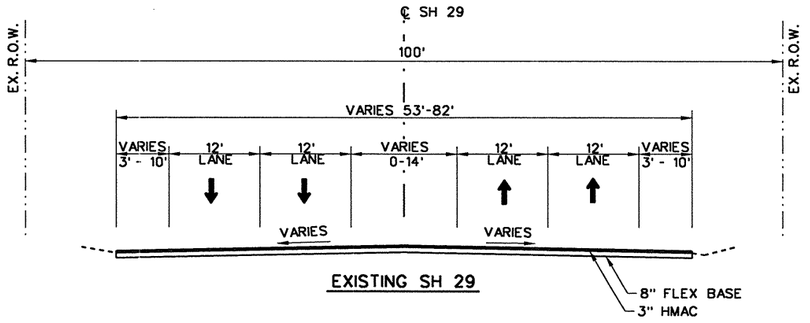

EXISTING SH 29

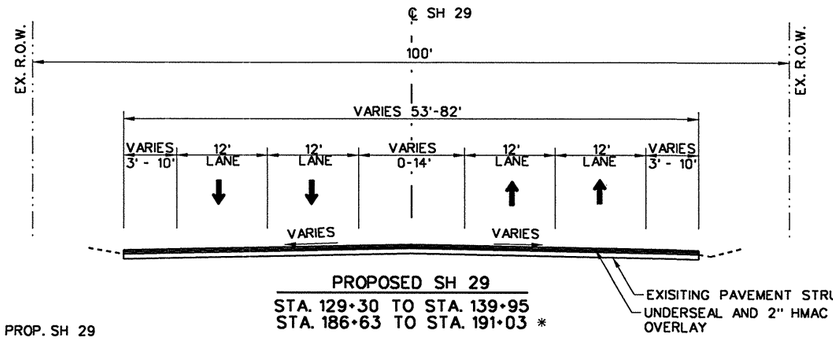

PROPOSED SH 29
STA. 129+30 TO STA. 139+95
STA. 186+63 TO STA. 191+03 *

* MILL, UNDERSEAL AND OVERLAY

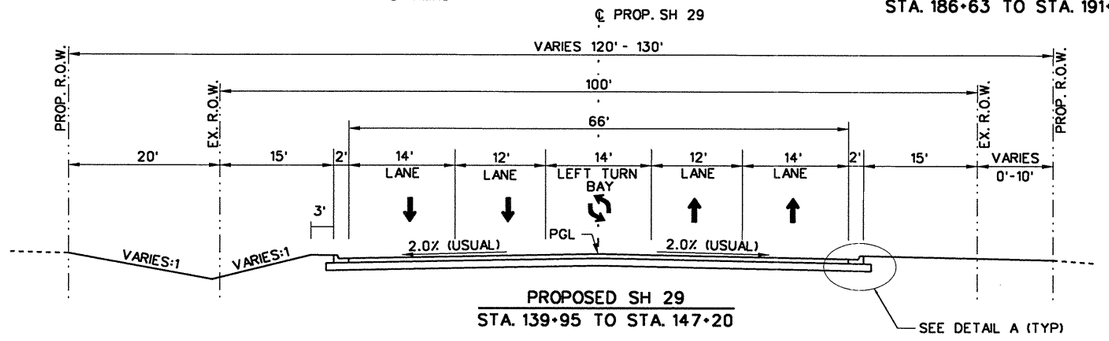

PROPOSED SH 29
STA. 139+95 TO STA. 147+20

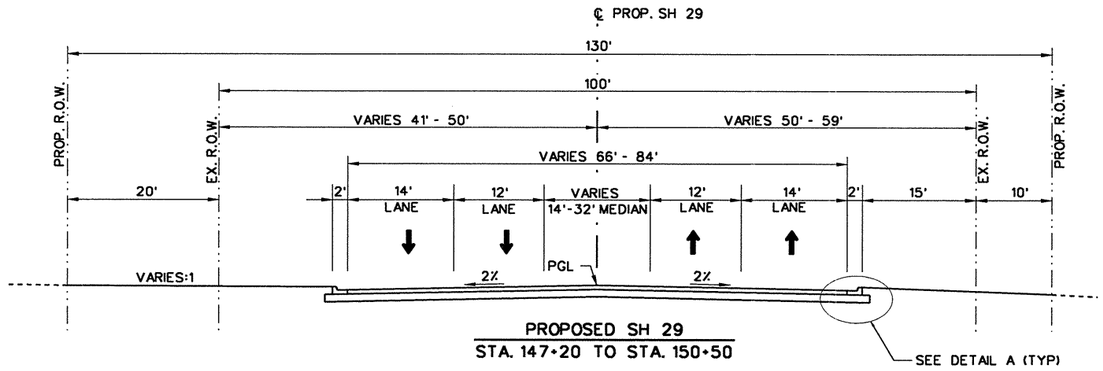

PROPOSED SH 29
STA. 147+20 TO STA. 150+50

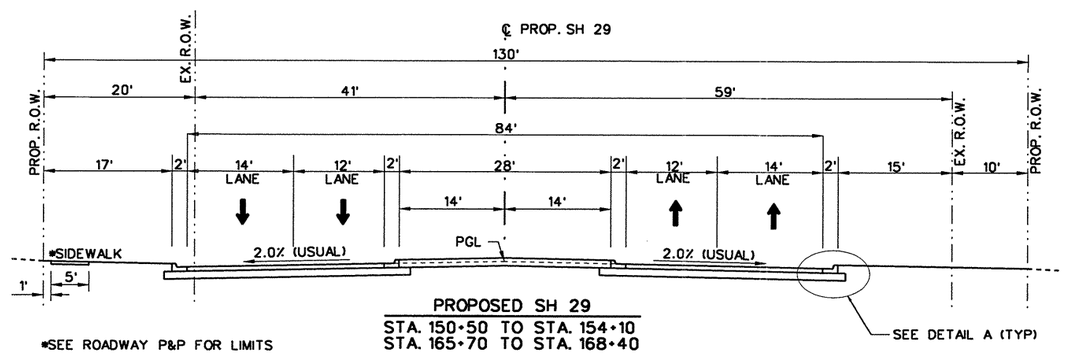

PROPOSED SH 29
STA. 150+50 TO STA. 154+10
STA. 165+70 TO STA. 168+40

*SEE ROADWAY P&P FOR LIMITS

LEGEND

① - 2" HMAC (TY C) (SURF)
② - 2" HMAC (TY C)
③ - 3" HMAC (TY B)
④ - 12" HMAC (TY A)

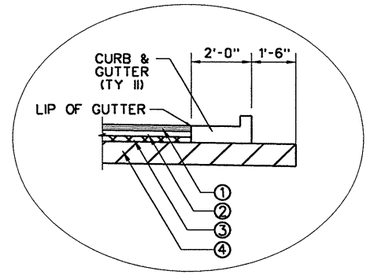

DETAIL A
N.T.S.

NOTES:

1. FOR EXACT EDGE CONDITIONS, SEE CROSS SECTIONS.
2. REFER TO ROADWAY PLAN & PROFILE SHEETS FOR SUPERELEVATION TRANSITIONS AND EXACT ROADWAY CROSS SLOPES.

STATE OF TEXAS
JAMES J. ROCHIS
83383
LICENSED
PROFESSIONAL ENGINEER
9/22/2004

NO.	REVISION	BY	DATE

CP&Y Chiang, Patel & Yerby, Inc.

© 2004

Texas Department of Transportation

SH 29

TYPICAL SECTIONS
SH 29

		FED. ROAD DIV. NO.	STATE	FEDERAL AID PROJECT NO.			SHEET NO.
Designed:	JWP	6	TEXAS	CC 337-1-29			14
Checked:	JJR	STATE DIST. NO.	COUNTY	CONTROL NO.	SECTION NO.	JOB NO.	HIGHWAY NO.
Drawn:	KGM	14	WILLIAMSON	0337	01	029	SH 29
Checked:	JJR						

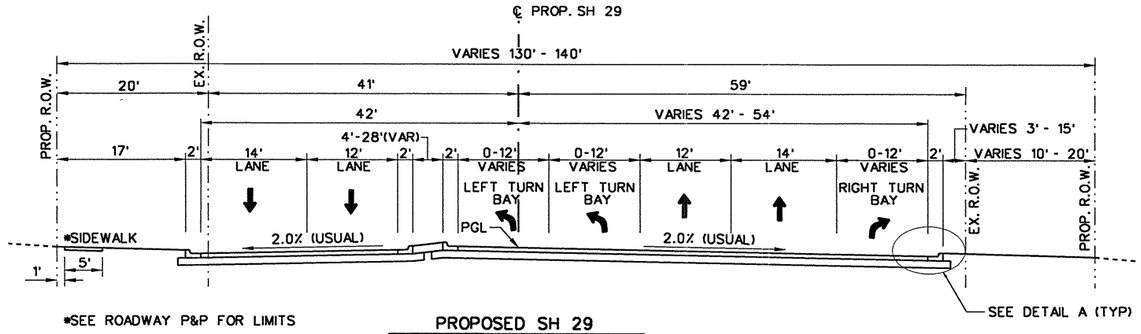

*SEE ROADWAY P&P FOR LIMITS

PROPOSED SH 29
STA. 154+10 TO STA. 158+83

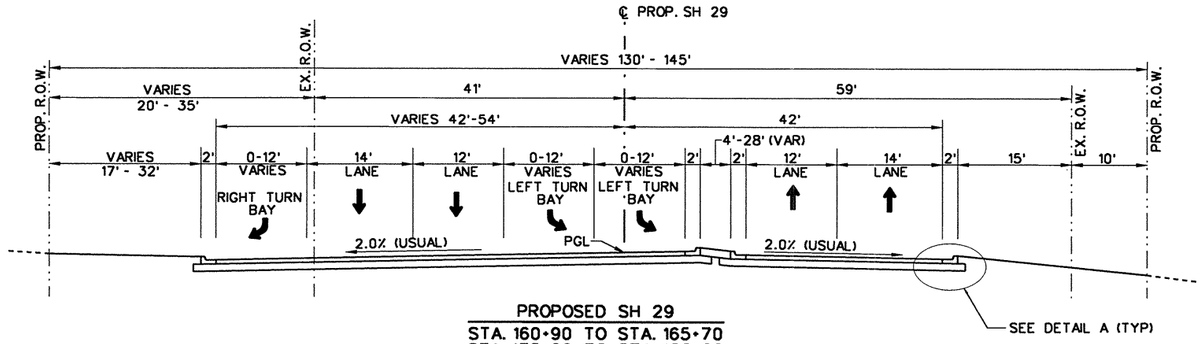

PROPOSED SH 29
STA. 160+90 TO STA. 165+70
STA. 175+00 TO STA. 180+00

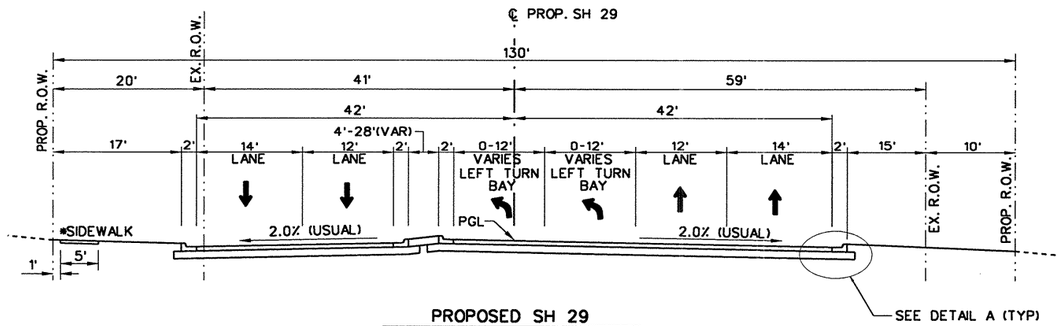

PROPOSED SH 29
STA. 168+40 TO STA. 173+22

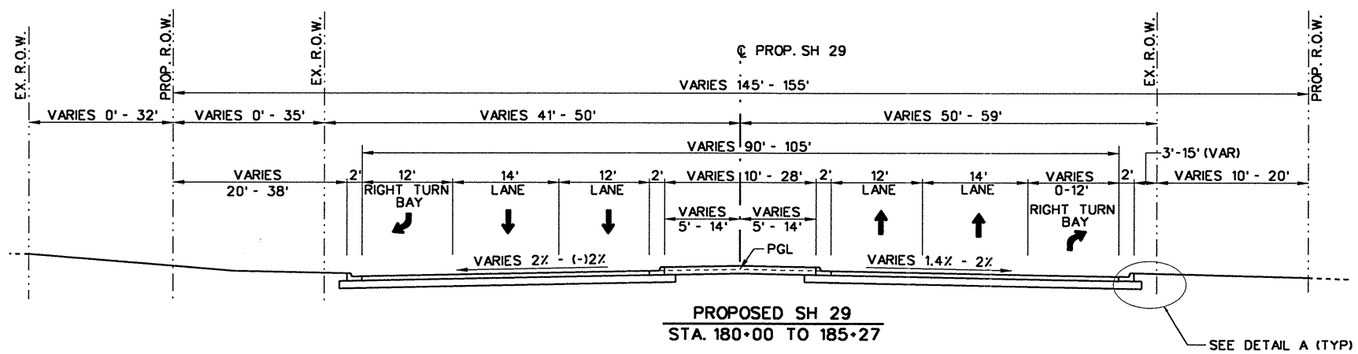

PROPOSED SH 29
STA. 180+00 TO 185+27

LEGEND

① - 2" HMAC (TY C) (SURF)
② - 2" HMAC (TY C)
③ - 3" HMAC (TY B)
④ - 12" HMAC (TY A)

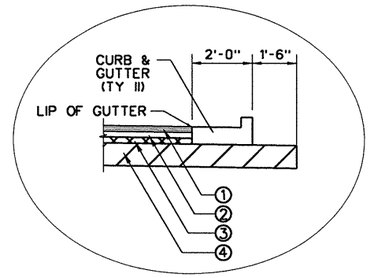

DETAIL A
N.T.S.

NOTES:

1. FOR EXACT EDGE CONDITIONS, SEE CROSS SECTIONS.
2. REFER TO ROADWAY PLAN & PROFILE SHEETS FOR SUPERELEVATION TRANSITIONS AND EXACT ROADWAY CROSS SLOPES.

STATE OF TEXAS
JAMES J. ROOHMS
83383
LICENSED
PROFESSIONAL ENGINEER
9/22/2004

NO.	REVISION	BY	DATE

CP&Y Chiang, Patel & Yerby, Inc.

© 2004

Texas Department of Transportation

SH 29

TYPICAL SECTIONS
SH 29

Designed:	JWP	FED. ROAD DIV. NO.	STATE	FEDERAL AID PROJECT NO.				SHEET NO.
Checked:	JJR	6	TEXAS	CC 337-1-29				15
Drawn:	KGM	STATE DIST. NO.	COUNTY		CONTROL NO.	SECTION NO.	JOB NO.	HIGHWAY NO.
Checked:	JJR	14	WILLIAMSON		0337	01	029	SH 29

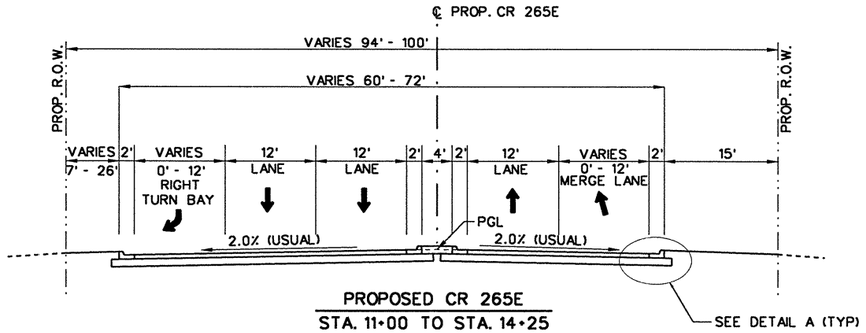

PROPOSED CR 265E
STA. 11+00 TO STA. 14+25

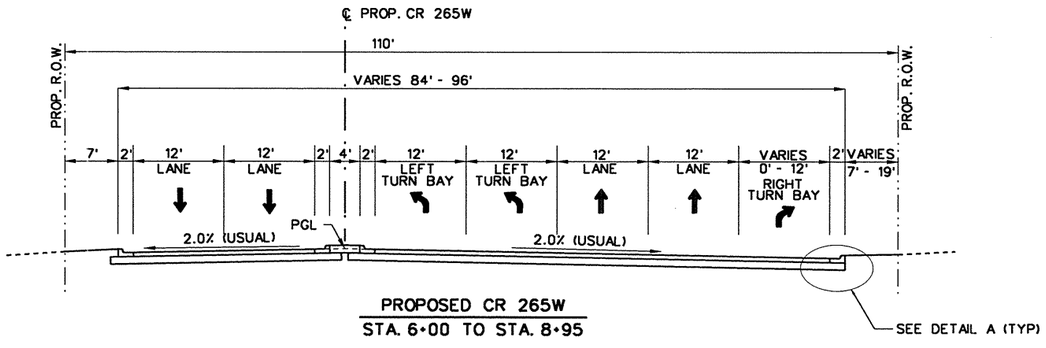

PROPOSED CR 265W
STA. 6+00 TO STA. 8+95

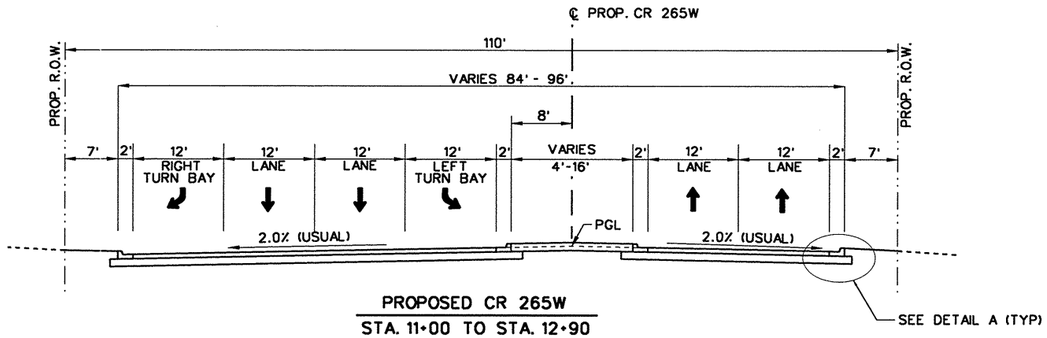

PROPOSED CR 265W
STA. 11+00 TO STA. 12+90

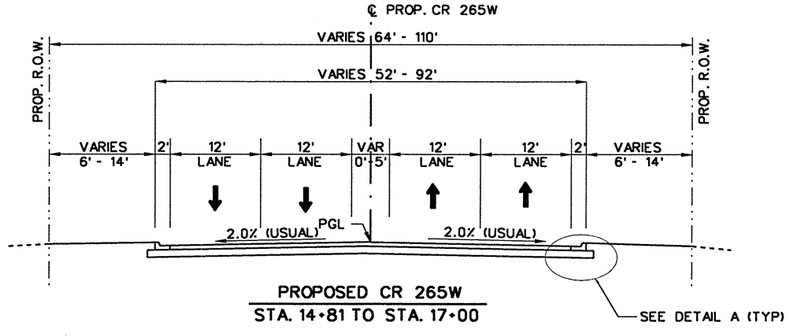

PROPOSED CR 265W
STA. 14+81 TO STA. 17+00

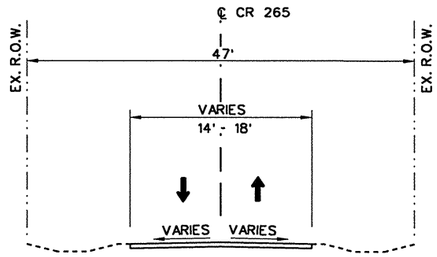

EXISTING CR 265W

LEGEND

① - 2" HMAC (TY C) (SURF)
② - 2" HMAC (TY C)
③ - 3" HMAC (TY B)
④ - 12" HMAC (TY A)

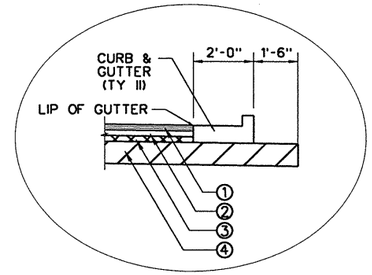

DETAIL A
N.T.S.

NOTES:

1. FOR EXACT EDGE CONDITIONS, SEE CROSS SECTIONS.
2. REFER TO ROADWAY PLAN & PROFILE SHEETS FOR SUPERELEVATION TRANSITIONS AND EXACT ROADWAY CROSS SLOPES.

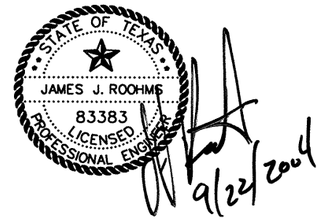

NO.	REVISION	BY	DATE

Chiang, Patel & Yerby, Inc.

© 2004

Texas Department of Transportation

SH 29

TYPICAL SECTIONS
CROSS STREETS

		FED. ROAD DIV. NO.	STATE	FEDERAL AID PROJECT NO.			SHEET NO.
Designed:	JWP	6	TEXAS	CC 337-1-29			16
Checked:	JJR	STATE DIST. NO.	COUNTY	CONTROL NO.	SECTION NO.	JOB NO.	HIGHWAY NO.
Drawn:	KGM	14	WILLIAMSON	0337	01	029	SH 29
Checked:	JJR						

LEGEND

① - 2" HMAC (TY C) (SURF)
② - 2" HMAC (TY C)
③ - 3" HMAC (TY B)
④ - 12" HMAC (TY A)

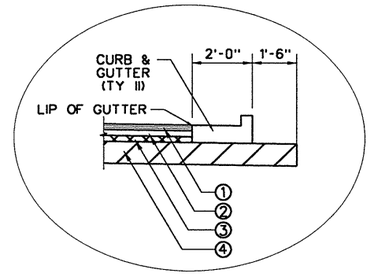

DETAIL A
N.T.S.

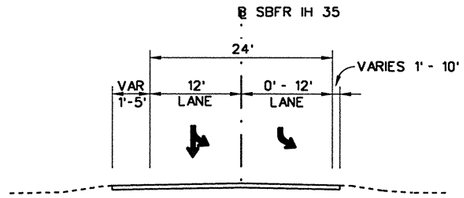

EXISTING IH 35 SBFR
STA. 77+90 TO STA. 79+95.89
STA. 80+89.53 TO STA. 82+75

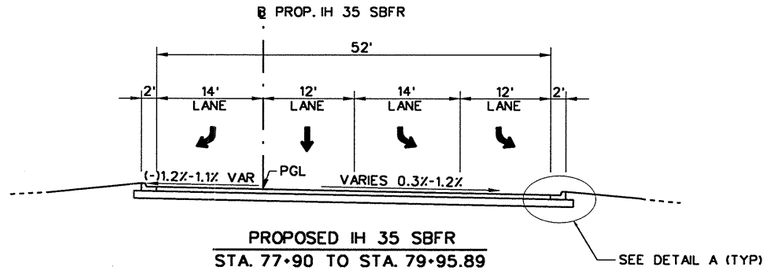

PROPOSED IH 35 SBFR
STA. 77+90 TO STA. 79+95.89

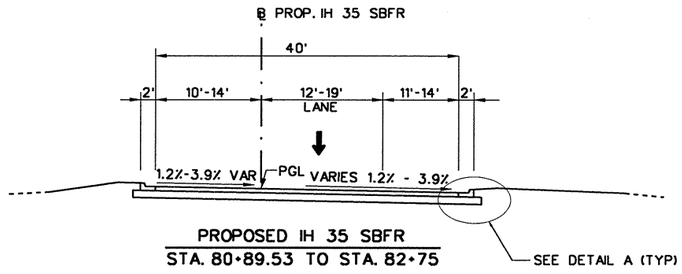

PROPOSED IH 35 SBFR
STA. 80+89.53 TO STA. 82+75

NOTES:

1. FOR EXACT EDGE CONDITIONS, SEE CROSS SECTIONS.
2. REFER TO ROADWAY PLAN & PROFILE SHEETS FOR SUPERELEVATION TRANSITIONS AND EXACT ROADWAY CROSS SLOPES.

STATE OF TEXAS
JAMES J. ROOHMS
83383
LICENSED PROFESSIONAL ENGINEER
9/22/2004

NO.	REVISION	BY	DATE

Chiang, Patel & Yerby, Inc.

© 2004

Texas Department of Transportation

SH 29

TYPICAL SECTIONS
IH 35 SBFR

		FED. ROAD DIV. NO.	STATE	FEDERAL AID PROJECT NO.				SHEET NO.
Designed:	JWP	6	TEXAS	CC 337-1-29				17
Checked:	JJR	STATE DIST. NO.	COUNTY	CONTROL NO.	SECTION NO.	JOB NO.	HIGHWAY NO.	
Drawn:	KGM	14	WILLIAMSON	0337	01	029	SH 29	
Checked:	JJR							

PHASE 1, STEP 1

PHASE 1, STEP 1 CONSISTS OF CONSTRUCTING TEMPORARY PAVEMENT WIDENING ON THE SOUTH SIDE OF SH 29 AND CONSTRUCTING DRAINAGE LINES "A" & "B" UNDER EXISTING PAVEMENT. TRAFFIC SHALL REMAIN ON EXISTING PAVEMENT AND SHALL CONSIST OF TWO LANES IN EACH DIRECTION WITH A CONTINUOUS LEFT TURN LANE WHERE SHOWN IN THE PLANS.

1. PLACE TRAFFIC CONTROL DEVICES AND ADVANCE WARNING SIGNS AS SHOWN IN THE PLANS. TRAFFIC CONTROL DEVICES AND ADVANCE WARNING SIGNS SHALL BE IN COMPLIANCE WITH THE TMUTCD.

2. DRAINAGE LINE "A" CROSSING AT STA 162+69 AND DRAINAGE LINE "B" CROSSING AT STA 181+10 SHALL BE CONSTRUCTED. TRAFFIC CONTROL SHALL FOLLOW TxDOT STANDARD TCP (2-4) AND AUSTIN DISTRICT STANDARD "CUTTING AND RESTORING PAVEMENT".

3. CONSTRUCT DOWNSTREAM END OF CULVERT NO.1 PRIOR TO PLACING TEMPORARY PAVEMENT WIDENING.

4. TEMPORARY PAVEMENT WIDENING SHALL BE PLACED ALONG THE SOUTH SIDE OF SH 29 FROM STA 137+70.71 TO STA 149+78.05. TRAFFIC CONTROL SHALL FOLLOW TxDOT STANDARD TCP (2-1).

5. CONSTRUCT DETOUR "A" ALONG EXISTING CR 265 WEST TO SH 29 AS SHOWN IN THE PLANS.

6. PERMANENT SIGNAL FOUNDATIONS AND POLES SHALL BE INSTALLED AT THE INTERSECTION OF CR 265 WEST AND SH 29. SEE TEMPORARY SIGNAL PLANS FOR ADDITIONAL INFORMATION.

PHASE 1, STEP 2

PHASE 1, STEP 2 CONSISTS OF CONSTRUCTING THE NORTH HALF OF SH 29. TRAFFIC SHALL REMAIN ON EXISTING PAVEMENT AND SHALL CONSIST OF ONE LANE IN EACH DIRECTION WITH A CENTER DUAL LEFT TURN LANE.

1. PLACE TRAFFIC CONTROL DEVICES AND ADVANCE WARNING SIGNS AS SHOWN IN THE PLANS. TRAFFIC CONTROL DEVICES AND ADVANCE WARNING SIGNS SHALL BE IN COMPLIANCE WITH THE TMUTCD.

2. SH 29 ALTERNATE ROUTE SIGNING SHALL BE INSTALLED AND REMAIN IN PLACE THROUGH PHASE 2, STEP 1. REFER TO SHEET 41 FOR LAYOUT.

3. CULVERTS AND DRAINAGE SYSTEMS SHALL BE PLACED AS SHOWN IN THE PLANS.

4. CONSTRUCT PROPOSED PAVEMENT TO THE NORTH AS SHOWN IN THE PLANS. CONSTRUCT TEMPORARY PAVEMENT WIDENING AS SHOWN IN THE PLANS. ACCESS TO PRIVATE PROPERTY SHALL REMAIN OPEN AT ALL TIMES.

5. CONSTRUCTION OF SOUTHBOUND FRONTAGE RD AND SH 29 INTERSECTION SHALL BE COMPLETED DURING NIGHTTIME HOURS (FROM 8PM TO 6AM) ONLY. TRAFFIC SHALL BE RESTORED EACH MORNING TO THE CONFIGURATION SHOWN IN THE PLANS. TRANSITIONS FROM PROPOSED TO EXISTING PAVEMENTS SHALL BE PLACED AND APPROVED BY THE ENGINEER PRIOR TO OPENING TRAFFIC ONTO PROPOSED PAVEMENT.

6. MEDIANS ALONG SH 29 WILL NOT BE CONSTRUCTED DURING THIS PHASE, BUT MEDIANS ALONG CR 265 EAST AND CR 265 WEST WILL BE CONSTRUCTED.

PHASE 1, STEP 3

PHASE 1, STEP 3 CONSISTS OF CONSTRUCTING THE REMAINING PORTION OF CR 265 WEST. TRAFFIC SHALL BE PLACED ONTO PROPOSED CR 265 WEST PAVEMENT CONSTRUCTED IN PREVIOUS STEP AND SHALL CONSIST OF ONE LANE IN EACH DIRECTION. TRAFFIC ALONG SH 29 SHALL REMAIN IN PLACE FROM PHASE 1, STEP 2.

1. PLACE TRAFFIC CONTROL DEVICES AND ADVANCE WARNING SIGNS AS SHOWN IN THE PLANS. TRAFFIC CONTROL DEVICES AND ADVANCE WARNING SIGNS SHALL BE IN COMPLIANCE WITH THE TMUTCD. MOVE AND RESET LOW PROFILE CONCRETE BARRIER PLACED IN PHASE 1, STEP 2 AT INTERSECTION OF CR 265 WEST.

2. DRAINAGE SYSTEMS SHALL BE PLACED AS SHOWN IN THE PLANS.

3. CONSTRUCT PROPOSED PAVEMENT ALONG CR 265 WEST AS SHOWN IN THE PLANS. ACCESS TO PRIVATE PROPERTY SHALL REMAIN OPEN AT ALL TIMES.

PHASE 2, STEP 1

PHASE 2, STEP 1 CONSISTS OF CONSTRUCTING THE SOUTH HALF OF SH 29. TRAFFIC SHALL BE PLACED ON PROPOSED PAVEMENT CONSTRUCTED IN PHASE 1, STEPS 1, 2 & 3. TRAFFIC SHALL CONSIST OF ONE LANE IN EACH DIRECTION WITH A CENTER DUAL LEFT TURN LANE.

1. PLACE TRAFFIC CONTROL DEVICES AND ADVANCE WARNING SIGNS AS SHOWN IN THE PLANS. TRAFFIC CONTROL DEVICES AND ADVANCE WARNING SIGNS SHALL BE IN COMPLIANCE WITH THE TMUTCD.

2. CULVERTS AND DRAINAGE SYSTEMS SHALL BE PLACED AS SHOWN IN THE PLANS.

3. CONSTRUCT PROPOSED PAVEMENT TO THE SOUTH AS SHOWN IN THE PLANS. ACCESS TO PRIVATE PROPERTY SHALL REMAIN OPEN AT ALL TIMES.

4. CONSTRUCTION OF SOUTHBOUND FRONTAGE RD AND SH 29 INTERSECTION SHALL BE COMPLETED DURING NIGHTTIME HOURS (FROM 8PM TO 6AM) ONLY USING FULL DEPTH ASPHALTIC PAVEMENT. TRAFFIC SHALL BE RESTORED EACH MORNING TO THE CONFIGURATION SHOWN IN THE PLANS. TRANSITIONS FROM PROPOSED TO EXISTING PAVEMENTS SHALL BE PLACED AND APPROVED BY THE ENGINEER PRIOR TO OPENING TRAFFIC ONTO PROPOSED PAVEMENT.

5. PLACE FINAL OVERLAY AND SIGNING AND STRIPING ON THE SOUTH HALF OF SH 29.

PHASE 3, STEP 1

PHASE 3, STEP 1 CONSISTS OF CONSTRUCTING THE CENTER MEDIANS ALONG SH 29, BEGINNING 2 IN. MILLING PROCESS & PLACING FINAL OVERLAY AND SIGNING AND STRIPING ON THE NORTH HALF OF THE JOB. EASTBOUND TRAFFIC SHALL BE PLACED IN ITS FINAL LOCATION ON THE SOUTH HALF OF SH 29. WESTBOUND TRAFFIC SHALL BE PLACED ON THE NORTH HALF OF SH 29, UTILIZING PROPOSED PAVEMENT AND STRIPING CONSTRUCTED IN PREVIOUS PHASE. WESTBOUND TRAFFIC SHALL BE PLACED INTO ITS FINAL LOCATION AS SHOWN IN THE SIGNING & STRIPING PLANS AFTER CONSTRUCTING THE CENTER MEDIANS.

1. BEGIN 5 IN. MILLING PROCESS OF TEMPORARY PAVEMENT WIDENING PLACED IN PHASE 1, STEP 2 ALONG CENTER MEDIANS OF SH 29, AND CONSTRUCT THE CENTER MEDIANS ALONG SH 29.

2. ONCE MEDIAN CONSTRUCTION HAS BEEN COMPLETED, BEGIN THE 2 IN. MILLING PROCESS ALONG SH 29 FROM STA. 186+62.63 TO STA 190+03. ONCE MILLING PROCESS HAS BEEN COMPLETED, PLACE FINAL OVERLAY. TRAFFIC CONTROL SHALL FOLLOW TxDOT STANDARD TCP (7-1).

3. ONCE FINAL OVERLAY IS IN PLACE, FINAL SIGNING AND STRIPING SHALL BE PLACED. INSTALL THE REMAINING PERMANENT TRAFFIC SIGNAL ASSEMBLIES AND REMOVE TEMPORARY TRAFFIC SIGNALS.

STATE OF TEXAS
JAMES J. ROOHMS
83383
LICENSED
PROFESSIONAL ENGINEER
9/22/2004

NO.	REVISION	BY	DATE

CP&Y Chiang, Patel & Yerby, Inc.

© 2004

Texas Department of Transportation

SH 29

TRAFFIC CONTROL PLANS
NARRATIVE

		FED. ROAD DIV. NO.	STATE	FEDERAL AID PROJECT NO.			SHEET NO.
Designed:	SML	6	TEXAS	CC 337-1-29			18
Checked:	JJR	STATE DIST. NO.	COUNTY	CONTROL NO.	SECTION NO.	JOB NO.	HIGHWAY NO.
Drawn:	SML	14	WILLIAMSON	0337	01	029	SH 29
Checked:	JJR						

...\wa3\WEST\common\533Wayg01.100 09/21/2004 05:43:12 PM

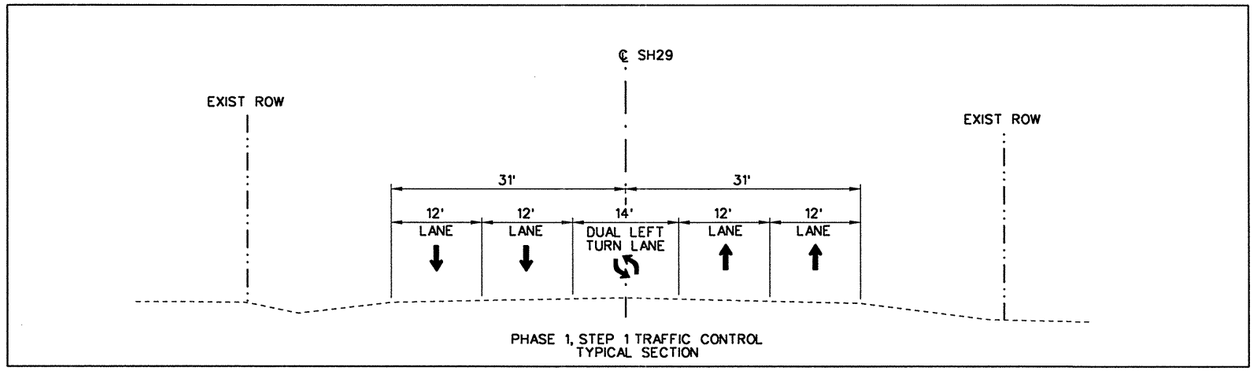

PHASE 1, STEP 1 TRAFFIC CONTROL
TYPICAL SECTION

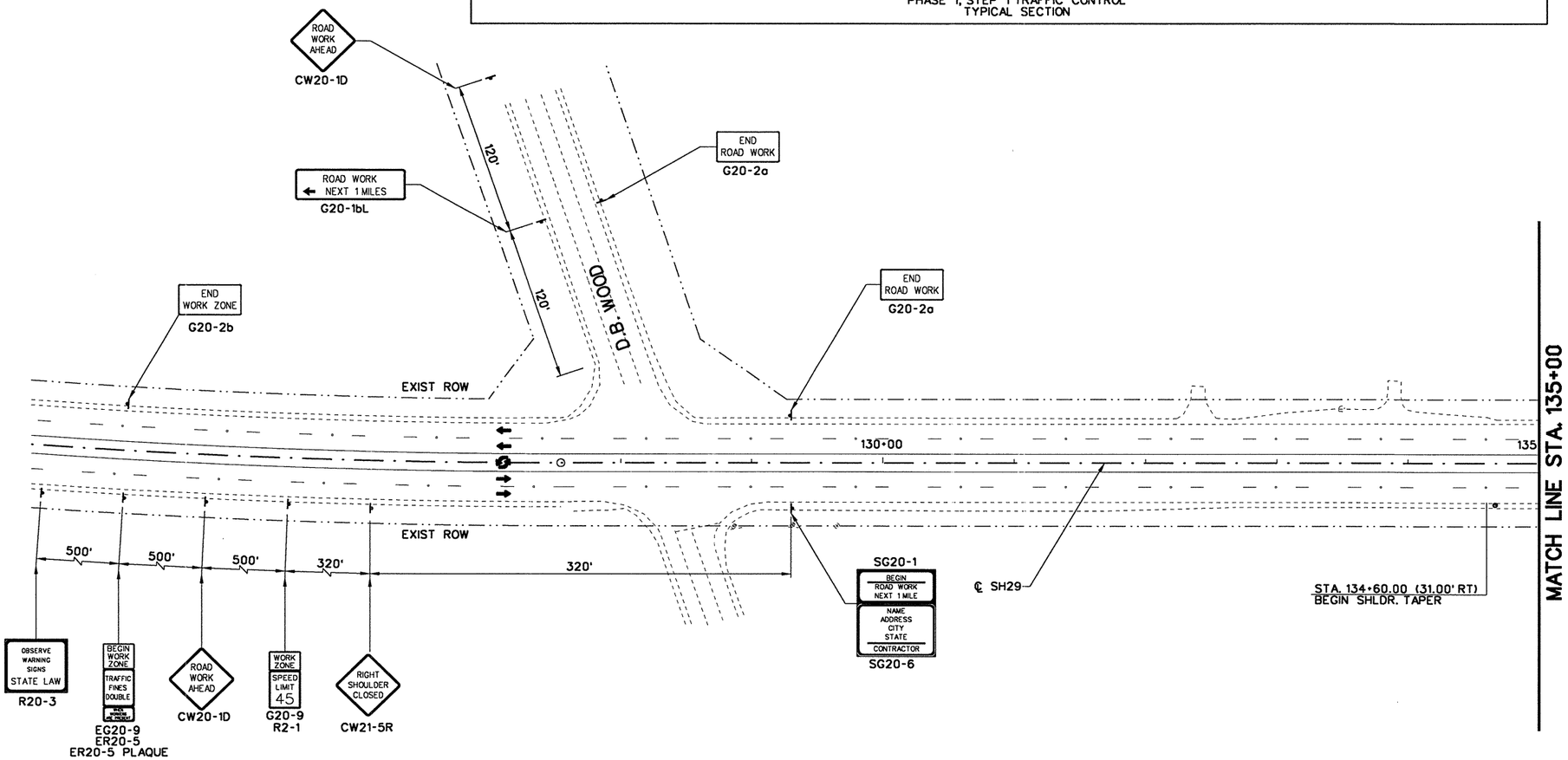

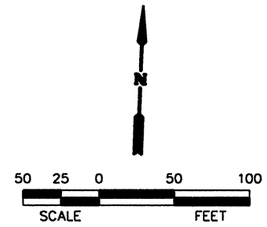

LEGEND

- PROPOSED CONSTRUCTION
- TEMPORARY PAVEMENT
- (A) WRK. ZN. PAV. MRK. (W) (4") (SLD) (REMOV)
- (B) WRK. ZN. PAV. MRK. (W) (4") (BRK) (REMOV)
- (C) WRK. ZN. PAV. MRK. (Y) (4") (SLD) (REMOV)
- (D) WRK. ZN. PAV. MRK. (Y) (4") (BRK) (REMOV)
- (E) WRK. ZN. PAV. MRK. (W) (8") (SLD) (REMOV)
- (H) WRK. ZN. PAV. MRK. (W) (24") (SLD) (REMOV)
- (K) WRK. ZN. PAV. MRK. (W) (ARROW) (REMOV)
- (L) WRK. ZN. PAV. MRK. (W) (WORD) (REMOV)
- (M) WRK. ZN. PAV. MRK. (W) (4") (SLD) (NON-REMOV)
- (N) WRK. ZN. PAV. MRK. (W) (4") (BRK) (NON-REMOV)
- (O) WRK. ZN. PAV. MRK. (Y) (4") (SLD) (NON-REMOV)
- (P) WRK. ZN. PAV. MRK. (Y) (4") (BRK) (NON-REMOV)
- (Q) WRK. ZN. PAV. MRK. (W) (8") (SLD) (NON-REMOV)
- (S) WRK. ZN. PAV. MRK. (W) (8") (LNDP) (NON-REMOV)
- (T) WRK. ZN. PAV. MRK. (W) (24") (SLD) (NON-REMOV)
- (U) WRK. ZN. PAV. MRK. (Y) (24") (SLD) (NON-REMOV)
- (V) WRK. ZN. PAV. MRK. (W) (ARROW) (NON-REMOV)
- (W) WRK. ZN. PAV. MRK. (W) (WORD) (NON-REMOV)
- (X) RAIS. PAV. MRK. (CL. B) (REFL.) TY. II-A-A
- (Y) RAIS. PAV. MRK. (CL. B) (REFL.) TY. I-C
- (TY III) BARRICADE
- LOW PROFILE CONC. BARRIER (L.P.C.B.)

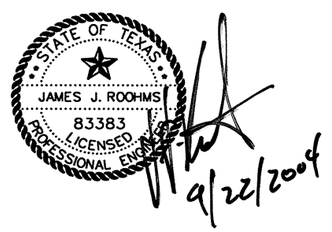

NO.	REVISION	BY	DATE

CP&Y Chiang, Patel & Yerby, Inc.

© 2004

Texas Department of Transportation

SH 29

TRAFFIC CONTROL PLANS

PHASE 1, STEP 1

BEGIN PROJECT TO STA 135+00

Designed: KGM	FED. ROAD DIV. NO.	STATE	FEDERAL AID PROJECT NO.			SHEET NO.
Checked: JJR	6	TEXAS	CC 337-1-29			19
Drawn: KGM	STATE DIST. NO.	COUNTY	CONTROL NO.	SECTION NO.	JOB NO.	HIGHWAY NO.
Checked: JJR	14	WILLIAMSON	0337	01	029	SH 29

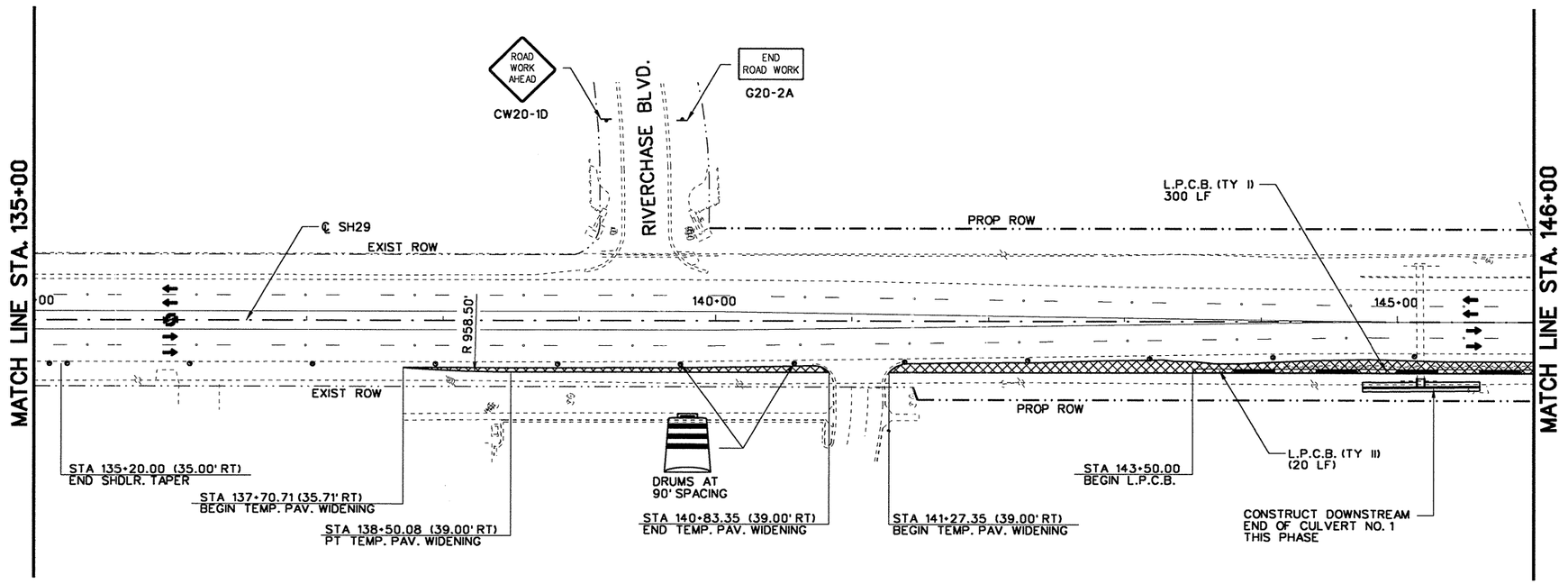

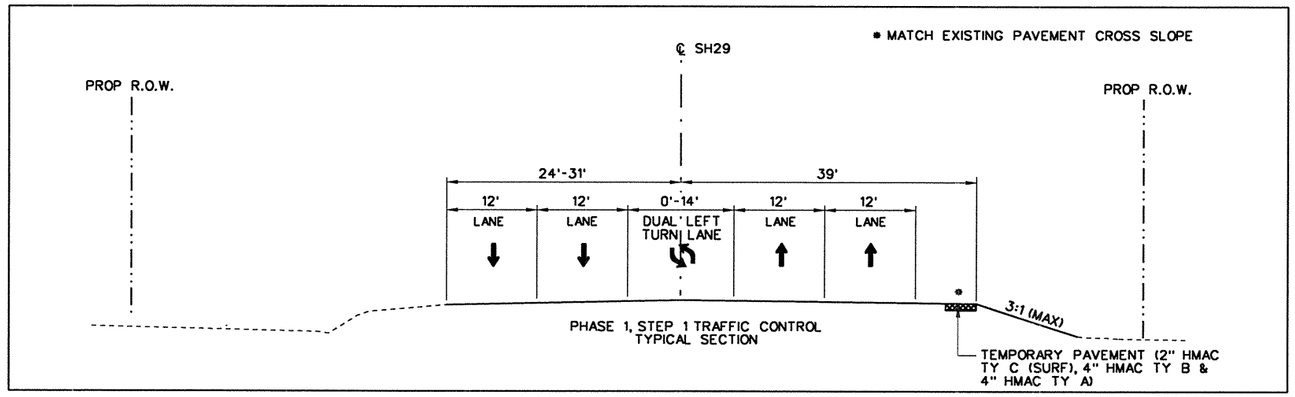

NOTES:

1. L.P.C.B. SHALL BE PLACED ONCE TEMPORARY PAVEMENT WIDENING HAS BEEN CONSTRUCTED.

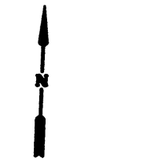

50 25 0 50 100
SCALE FEET

LEGEND

- PROPOSED CONSTRUCTION
- TEMPORARY PAVEMENT
- (A) WRK. ZN. PAV. MRK. (W) (4") (SLD) (REMOV)
- (B) WRK. ZN. PAV. MRK. (W) (4") (BRK) (REMOV)
- (C) WRK. ZN. PAV. MRK. (Y) (4") (SLD) (REMOV)
- (D) WRK. ZN. PAV. MRK. (Y) (4") (BRK) (REMOV)
- (E) WRK. ZN. PAV. MRK. (W) (8") (SLD) (REMOV)
- (H) WRK. ZN. PAV. MRK. (W) (24") (SLD) (REMOV)
- (K) WRK. ZN. PAV. MRK. (W) (ARROW) (REMOV)
- (L) WRK. ZN. PAV. MRK. (W) (WORD) (REMOV)
- (M) WRK. ZN. PAV. MRK. (W) (4") (SLD) (NON-REMOV)
- (N) WRK. ZN. PAV. MRK. (W) (4") (BRK) (NON-REMOV)
- (O) WRK. ZN. PAV. MRK. (Y) (4") (SLD) (NON-REMOV)
- (P) WRK. ZN. PAV. MRK. (Y) (4") (BRK) (NON-REMOV)
- (Q) WRK. ZN. PAV. MRK. (W) (8") (SLD) (NON-REMOV)
- (S) WRK. ZN. PAV. MRK. (W) (8") (LNDP) (NON-REMOV)
- (T) WRK. ZN. PAV. MRK. (W) (24") (SLD) (NON-REMOV)
- (U) WRK. ZN. PAV. MRK. (Y) (24") (SLD) (NON-REMOV)
- (V) WRK. ZN. PAV. MRK. (W) (ARROW) (NON-REMOV)
- (W) WRK. ZN. PAV. MRK. (W) (WORD) (NON-REMOV)
- (X) RAIS. PAV. MRK. (CL. B) (REFL.) TY. II-A-A
- (Y) RAIS. PAV. MRK. (CL. B) (REFL.) TY. I-C
- H (TY III) BARRICADE
- LOW PROFILE CONC. BARRIER (L.P.C.B.)

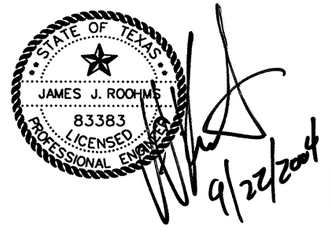

NO.	REVISION	BY	DATE

CP&Y Chiang, Patel & Yerby, Inc.

© 2004

Texas Department of Transportation

SH 29

TRAFFIC CONTROL PLANS

PHASE 1, STEP 1

STA. 135+00 TO STA. 146+00

		FED. ROAD DIV. NO.	STATE	FEDERAL AID PROJECT NO.			SHEET NO.
Designed:	KGM	6	TEXAS	CC 337-1-29			20
Checked:	JJR	STATE DIST. NO.	COUNTY	CONTROL NO.	SECTION NO.	JOB NO.	HIGHWAY NO.
Drawn:	KGM	14	WILLIAMSON	0337	01	029	SH 29
Checked:	JJR						

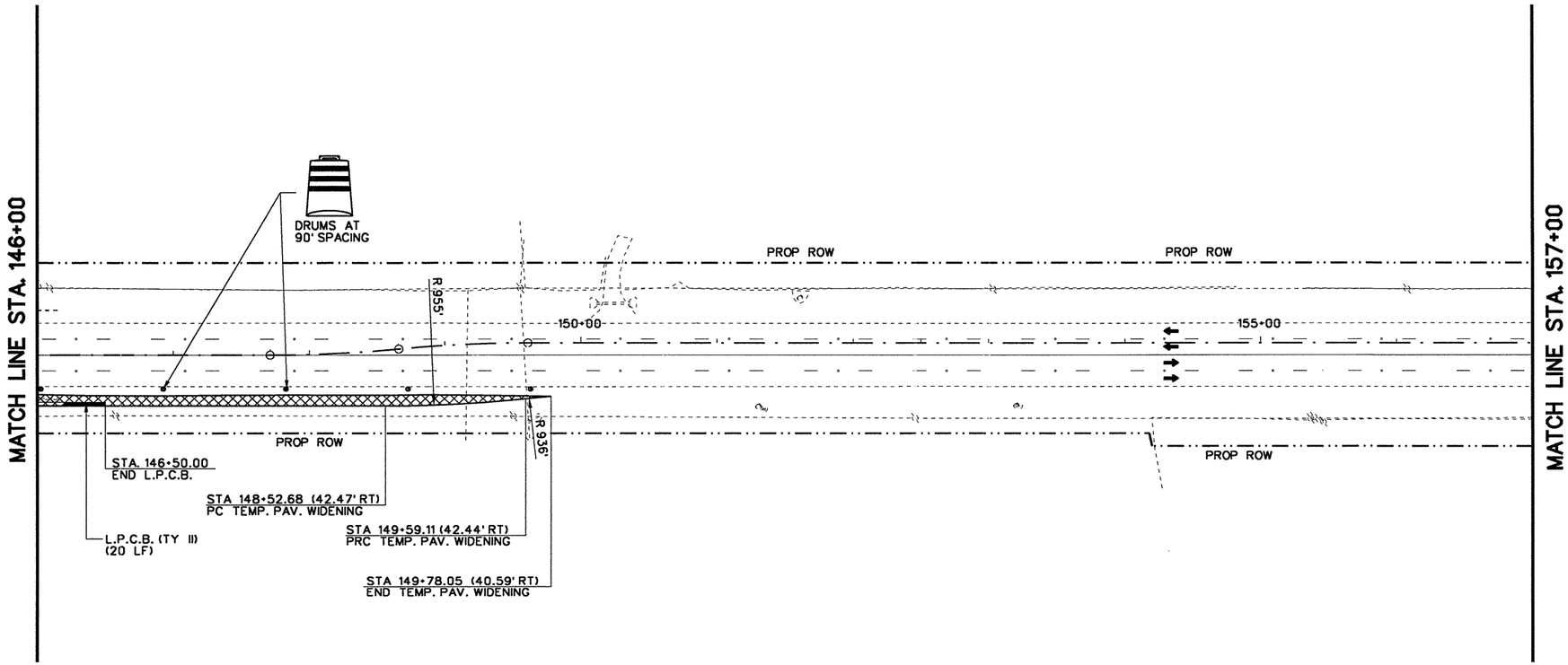

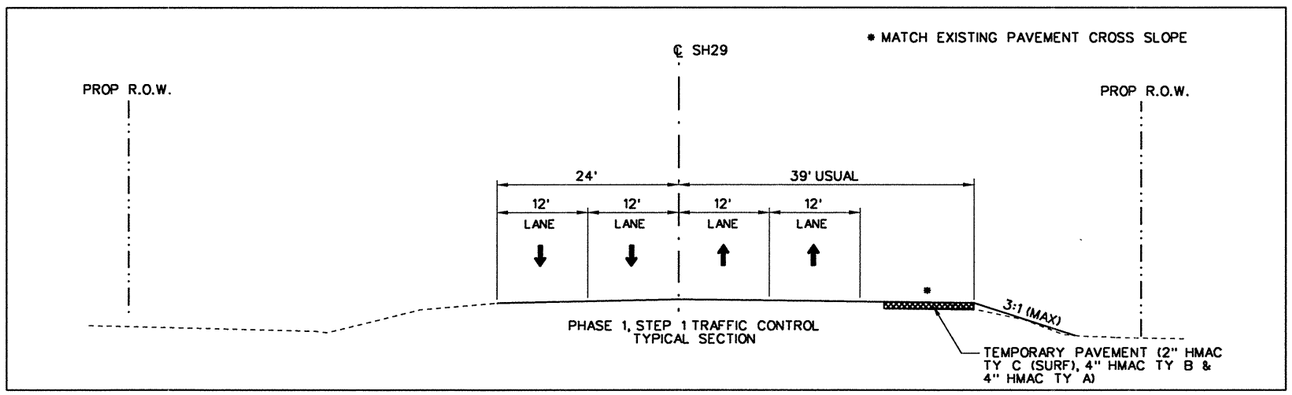

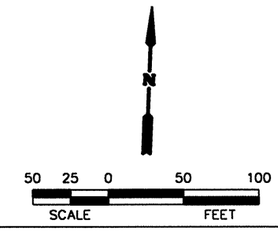

LEGEND

- PROPOSED CONSTRUCTION
- TEMPORARY PAVEMENT
- (A) WRK. ZN. PAV. MRK. (W) (4") (SLD) (REMOV)
- (B) WRK. ZN. PAV. MRK. (W) (4") (BRK) (REMOV)
- (C) WRK. ZN. PAV. MRK. (Y) (4") (SLD) (REMOV)
- (D) WRK. ZN. PAV. MRK. (Y) (4") (BRK) (REMOV)
- (E) WRK. ZN. PAV. MRK. (W) (8") (SLD) (REMOV)
- (H) WRK. ZN. PAV. MRK. (W) (24") (SLD) (REMOV)
- (K) WRK. ZN. PAV. MRK. (W) (ARROW) (REMOV)
- (L) WRK. ZN. PAV. MRK. (W) (WORD) (REMOV)
- (M) WRK. ZN. PAV. MRK. (W) (4") (SLD) (NON-REMOV)
- (N) WRK. ZN. PAV. MRK. (W) (4") (BRK) (NON-REMOV)
- (O) WRK. ZN. PAV. MRK. (Y) (4") (SLD) (NON-REMOV)
- (P) WRK. ZN. PAV. MRK. (Y) (4") (BRK) (NON-REMOV)
- (Q) WRK. ZN. PAV. MRK. (W) (8") (SLD) (NON-REMOV)
- (S) WRK. ZN. PAV. MRK. (W) (8") (LNDP) (NON-REMOV)
- (T) WRK. ZN. PAV. MRK. (W) (24") (SLD) (NON-REMOV)
- (U) WRK. ZN. PAV. MRK. (Y) (24") (SLD) (NON-REMOV)
- (V) WRK. ZN. PAV. MRK. (W) (ARROW) (NON-REMOV)
- (W) WRK. ZN. PAV. MRK. (W) (WORD) (NON-REMOV)
- (X) RAIS. PAV. MRK. (CL. B) (REFL.) TY. II-A-A
- (Y) RAIS. PAV. MRK. (CL. B) (REFL.) TY. I-C
- (TY III) BARRICADE
- LOW PROFILE CONC. BARRIER (L.P.C.B.)

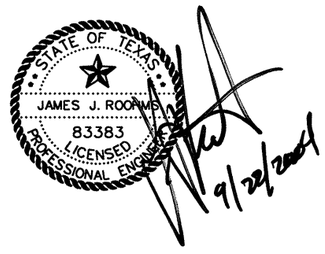

NOTES:

1. L.P.C.B. SHALL BE PLACED ONCE TEMPORARY PAVEMENT WIDENING HAS BEEN CONSTRUCTED.

NO.	REVISION	BY	DATE

Chiang, Patel & Yerby, Inc.

© 2004

Texas Department of Transportation

SH 29

TRAFFIC CONTROL PLANS

PHASE 1, STEP 1

STA. 146+00 TO STA. 157+00

		FED. ROAD DIV. NO.	STATE	FEDERAL AID PROJECT NO.			SHEET NO.
Designed:	KGM	6	TEXAS	CC 337-1-29			2.1
Checked:	JJR	STATE DIST. NO.	COUNTY	CONTROL NO.	SECTION NO.	JOB NO.	HIGHWAY NO.
Drawn:	KGM	14	WILLIAMSON	0337	01	029	SH 29
Checked:	JJR						

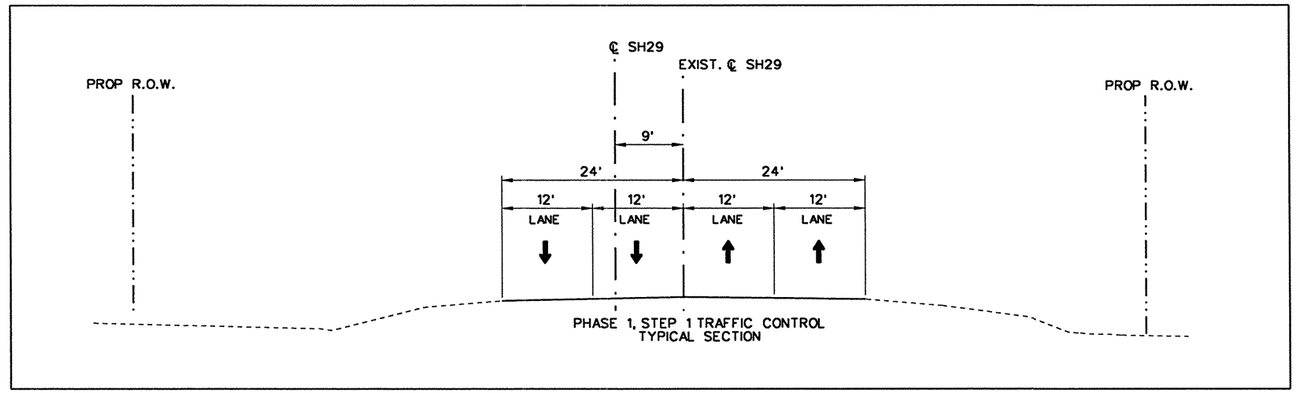

PHASE 1, STEP 1 TRAFFIC CONTROL
TYPICAL SECTION

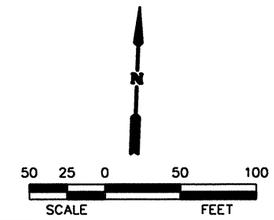

LEGEND

- PROPOSED CONSTRUCTION
- TEMPORARY PAVEMENT
- (A) WRK. ZN. PAV. MRK. (W) (4") (SLD) (REMOV)
- (B) WRK. ZN. PAV. MRK. (W) (4") (BRK) (REMOV)
- (C) WRK. ZN. PAV. MRK. (Y) (4") (SLD) (REMOV)
- (D) WRK. ZN. PAV. MRK. (Y) (4") (BRK) (REMOV)
- (E) WRK. ZN. PAV. MRK. (W) (8") (SLD) (REMOV)
- (H) WRK. ZN. PAV. MRK. (W) (24") (SLD) (REMOV)
- (K) WRK. ZN. PAV. MRK. (W) (ARROW) (REMOV)
- (L) WRK. ZN. PAV. MRK. (W) (WORD) (REMOV)
- (M) WRK. ZN. PAV. MRK. (W) (4") (SLD) (NON-REMOV)
- (N) WRK. ZN. PAV. MRK. (W) (4") (BRK) (NON-REMOV)
- (O) WRK. ZN. PAV. MRK. (Y) (4") (SLD) (NON-REMOV)
- (P) WRK. ZN. PAV. MRK. (Y) (4") (BRK) (NON-REMOV)
- (Q) WRK. ZN. PAV. MRK. (W) (8") (SLD) (NON-REMOV)
- (S) WRK. ZN. PAV. MRK. (W) (8") (LNDP) (NON-REMOV)
- (T) WRK. ZN. PAV. MRK. (W) (24") (SLD) (NON-REMOV)
- (U) WRK. ZN. PAV. MRK. (Y) (24") (SLD) (NON-REMOV)
- (V) WRK. ZN. PAV. MRK. (W) (ARROW) (NON-REMOV)
- (W) WRK. ZN. PAV. MRK. (W) (WORD) (NON-REMOV)
- (X) RAIS. PAV. MRK. (CL. B) (REFL.) TY. II-A-A
- (Y) RAIS. PAV. MRK. (CL. B) (REFL.) TY. I-C
- (TY III) BARRICADE
- LOW PROFILE CONC. BARRIER (L.P.C.B.)

NOTES:

1. FOR ADDITIONAL INFORMATION ON DETOUR "A", SEE DETOUR LAYOUT.

2. CONTRACTOR SHALL USE APPROPRIATE MEANS AND METHODS TO CONSTRUCT DRAINAGE STRUCTURES NEAR 30" WATERLINE. ADDITIONAL ITEMS REQUIRED FOR CONSTRUCTION SHALL BE SUBSIDIARY TO PIPE PLACEMENT.

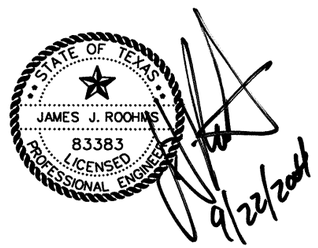

NO.	REVISION	BY	DATE

CP&Y Chiang, Patel & Yerby, Inc.

© 2004

Texas Department of Transportation

SH 29

TRAFFIC CONTROL PLANS

PHASE 1, STEP 1

STA. 157+00 TO STA. 168+00

		FED. ROAD DIV. NO.	STATE	FEDERAL AID PROJECT NO.				SHEET NO.
Designed:	KGM	6	TEXAS	CC 337-1-29				22
Checked:	JJR	STATE DIST. NO.	COUNTY	CONTROL NO.	SECTION NO.	JOB NO.	HIGHWAY NO.	
Drawn:	KGM	14	WILLIAMSON	0337	01	029	SH 29	
Checked:	JJR							

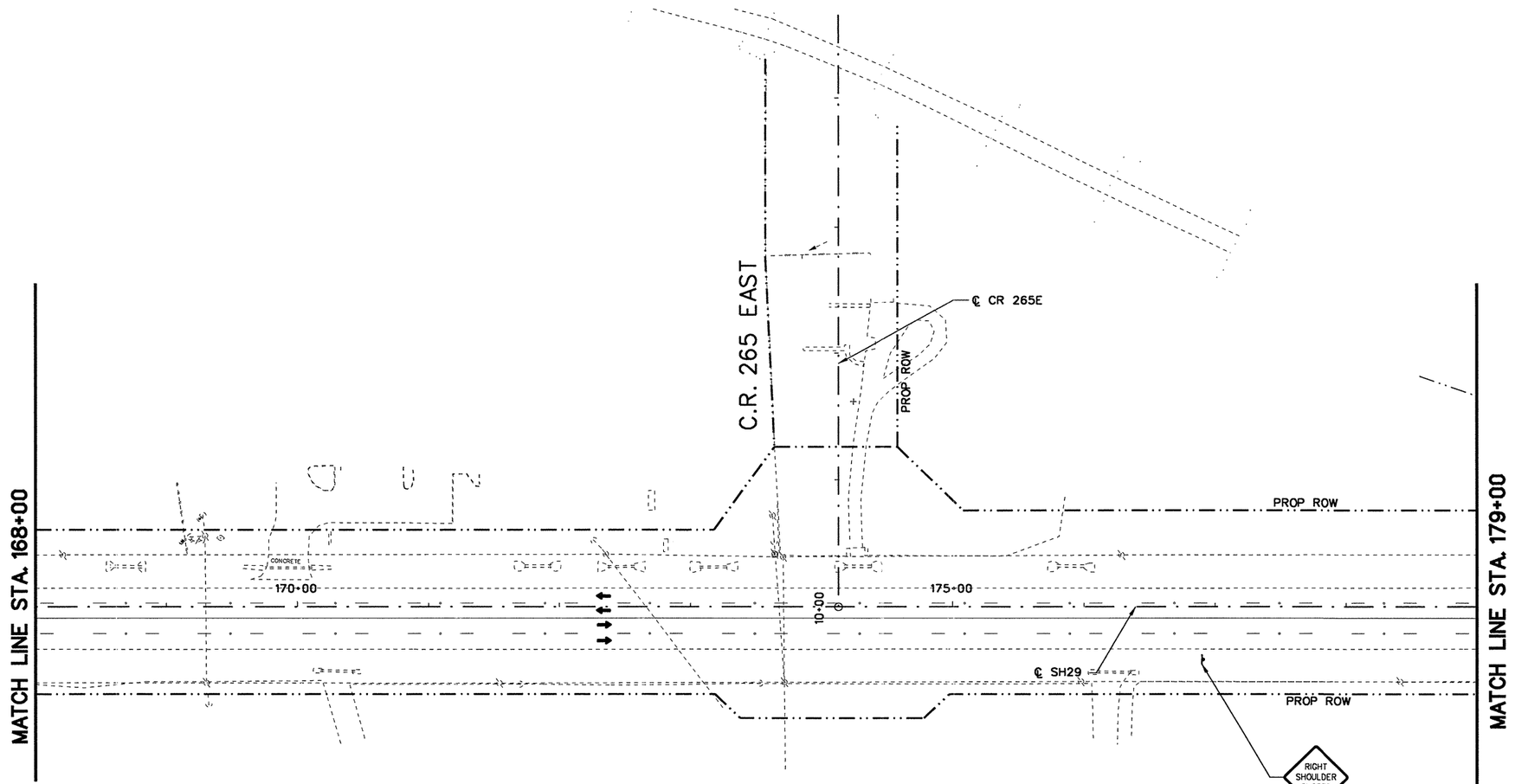

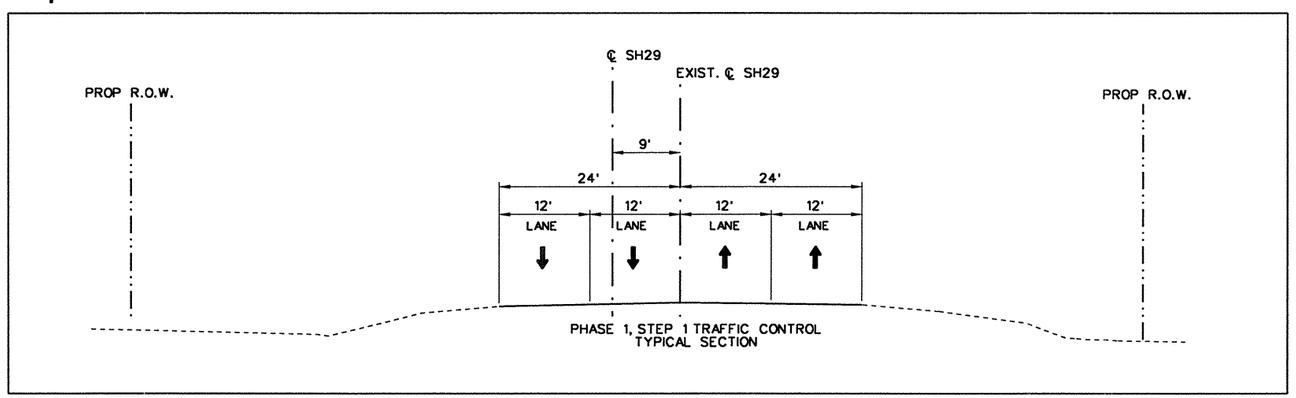

PHASE 1, STEP 1 TRAFFIC CONTROL
TYPICAL SECTION

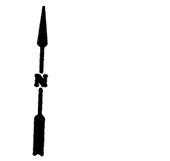

50 25 0 50 100
SCALE FEET

LEGEND

- PROPOSED CONSTRUCTION
- TEMPORARY PAVEMENT
- (A) WRK. ZN. PAV. MRK. (W) (4") (SLD) (REMOV)
- (B) WRK. ZN. PAV. MRK. (W) (4") (BRK) (REMOV)
- (C) WRK. ZN. PAV. MRK. (Y) (4") (SLD) (REMOV)
- (D) WRK. ZN. PAV. MRK. (Y) (4") (BRK) (REMOV)
- (E) WRK. ZN. PAV. MRK. (W) (8") (SLD) (REMOV)
- (H) WRK. ZN. PAV. MRK. (W) (24") (SLD) (REMOV)
- (K) WRK. ZN. PAV. MRK. (W) (ARROW) (REMOV)
- (L) WRK. ZN. PAV. MRK. (W) (WORD) (REMOV)
- (M) WRK. ZN. PAV. MRK. (W) (4") (SLD) (NON-REMOV)
- (N) WRK. ZN. PAV. MRK. (W) (4") (BRK) (NON-REMOV)
- (O) WRK. ZN. PAV. MRK. (Y) (4") (SLD) (NON-REMOV)
- (P) WRK. ZN. PAV. MRK. (Y) (4") (BRK) (NON-REMOV)
- (Q) WRK. ZN. PAV. MRK. (W) (8") (SLD) (NON-REMOV)
- (S) WRK. ZN. PAV. MRK. (W) (8") (LNDP) (NON-REMOV)
- (T) WRK. ZN. PAV. MRK. (W) (24") (SLD) (NON-REMOV)
- (U) WRK. ZN. PAV. MRK. (Y) (24") (SLD) (NON-REMOV)
- (V) WRK. ZN. PAV. MRK. (W) (ARROW) (NON-REMOV)
- (W) WRK. ZN. PAV. MRK. (W) (WORD) (NON-REMOV)
- (X) RAIS. PAV. MRK. (CL. B) (REFL.) TY. II-A-A
- (Y) RAIS. PAV. MRK. (CL. B) (REFL.) TY. I-C
- (TY III) BARRICADE
- LOW PROFILE CONC. BARRIER (L.P.C.B.)

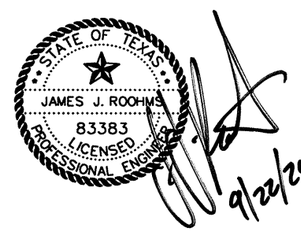

NO.	REVISION	BY	DATE

Chiang, Patel & Yerby, Inc.

© 2004

Texas Department of Transportation

SH 29

TRAFFIC CONTROL PLANS

PHASE 1, STEP 1
STA. 168+00 TO STA. 179+00

		FED. ROAD DIV. NO.	STATE	FEDERAL AID PROJECT NO.				SHEET NO.
Designed:	KGM	6	TEXAS	CC 337-1-29				23
Drawn:	KGM	STATE DIST. NO.	COUNTY	CONTROL NO.	SECTION NO.	JOB NO.	HIGHWAY NO.	
Checked:	JJR	14	WILLIAMSON	0337	01	029	SH 29	
Checked:	JJR							

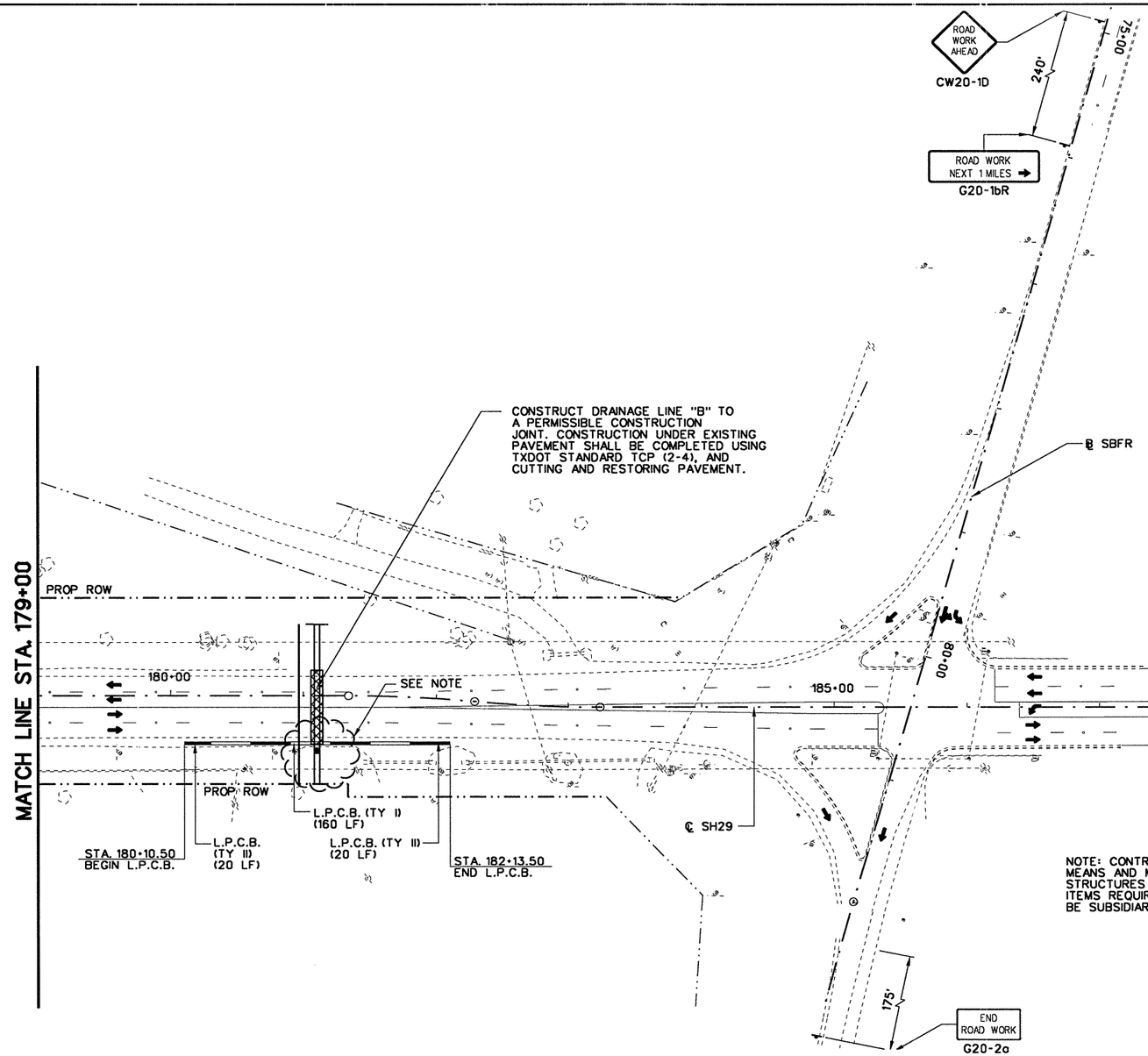

NOTE: CONTRACTOR SHALL USE APPROPRIATE MEANS AND METHODS TO CONSTRUCT DRAINAGE STRUCTURES NEAR 30" WATERLINE. ADDITIONAL ITEMS REQUIRED FOR CONSTRUCTION SHALL BE SUBSIDIARY TO PIPE PLACEMENT.

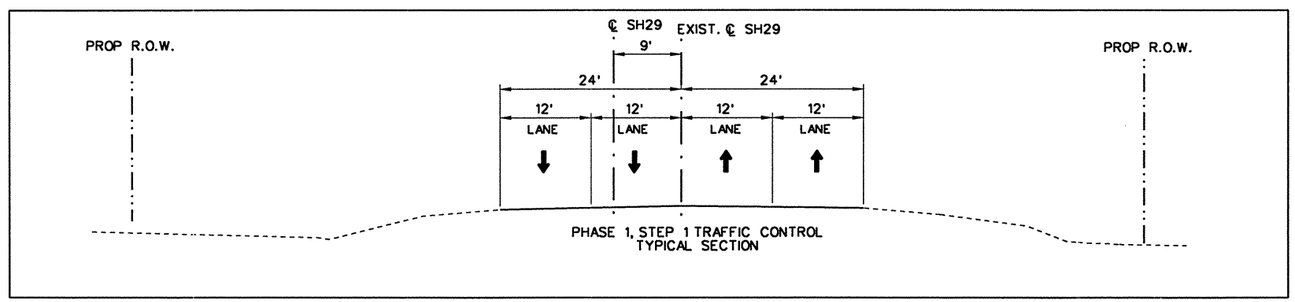

PHASE 1, STEP 1 TRAFFIC CONTROL TYPICAL SECTION

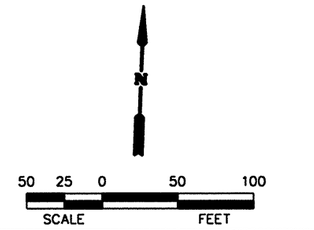

LEGEND

- PROPOSED CONSTRUCTION
- TEMPORARY PAVEMENT
- (A) WRK. ZN. PAV. MRK. (W) (4") (SLD) (REMOV)
- (B) WRK. ZN. PAV. MRK. (W) (4") (BRK) (REMOV)
- (C) WRK. ZN. PAV. MRK. (Y) (4") (SLD) (REMOV)
- (D) WRK. ZN. PAV. MRK. (Y) (4") (BRK) (REMOV)
- (E) WRK. ZN. PAV. MRK. (W) (8") (SLD) (REMOV)
- (H) WRK. ZN. PAV. MRK. (W) (24") (SLD) (REMOV)
- (K) WRK. ZN. PAV. MRK. (W) (ARROW) (REMOV)
- (L) WRK. ZN. PAV. MRK. (W) (WORD) (REMOV)
- (M) WRK. ZN. PAV. MRK. (W) (4") (SLD) (NON-REMOV)
- (N) WRK. ZN. PAV. MRK. (W) (4") (BRK) (NON-REMOV)
- (O) WRK. ZN. PAV. MRK. (Y) (4") (SLD) (NON-REMOV)
- (P) WRK. ZN. PAV. MRK. (Y) (4") (BRK) (NON-REMOV)
- (Q) WRK. ZN. PAV. MRK. (W) (8") (SLD) (NON-REMOV)
- (S) WRK. ZN. PAV. MRK. (W) (8") (LNDP) (NON-REMOV)
- (T) WRK. ZN. PAV. MRK. (W) (24") (SLD) (NON-REMOV)
- (U) WRK. ZN. PAV. MRK. (Y) (24") (SLD) (NON-REMOV)
- (V) WRK. ZN. PAV. MRK. (W) (ARROW) (NON-REMOV)
- (W) WRK. ZN. PAV. MRK. (W) (WORD) (NON-REMOV)
- (X) RAIS. PAV. MRK. (CL. B) (REFL.) TY. II-A-A
- (Y) RAIS. PAV. MRK. (CL. B) (REFL.) TY. I-C
- (TY III) BARRICADE
- LOW PROFILE CONC. BARRIER (L.P.C.B.)

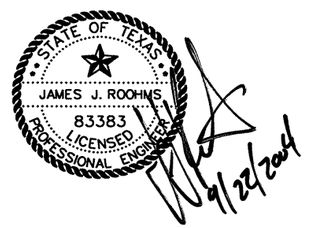

NO.	REVISION	BY	DATE

CP&Y Chiang, Patel & Yerby, Inc.

© 2004

Texas Department of Transportation

SH 29

TRAFFIC CONTROL PLANS

PHASE 1, STEP 1

STA. 179+00 TO STA. 190+00

		FED. ROAD DIV. NO.	STATE	FEDERAL AID PROJECT NO.				SHEET NO.
Designed:	KGM	6	TEXAS	CC 337-1-29				24
Checked:	JJR	STATE DIST. NO.	COUNTY	CONTROL NO.	SECTION NO.	JOB NO.	HIGHWAY NO.	
Drawn:	KGM	14	WILLIAMSON	0337	01	029	SH 29	
Checked:	JJR							

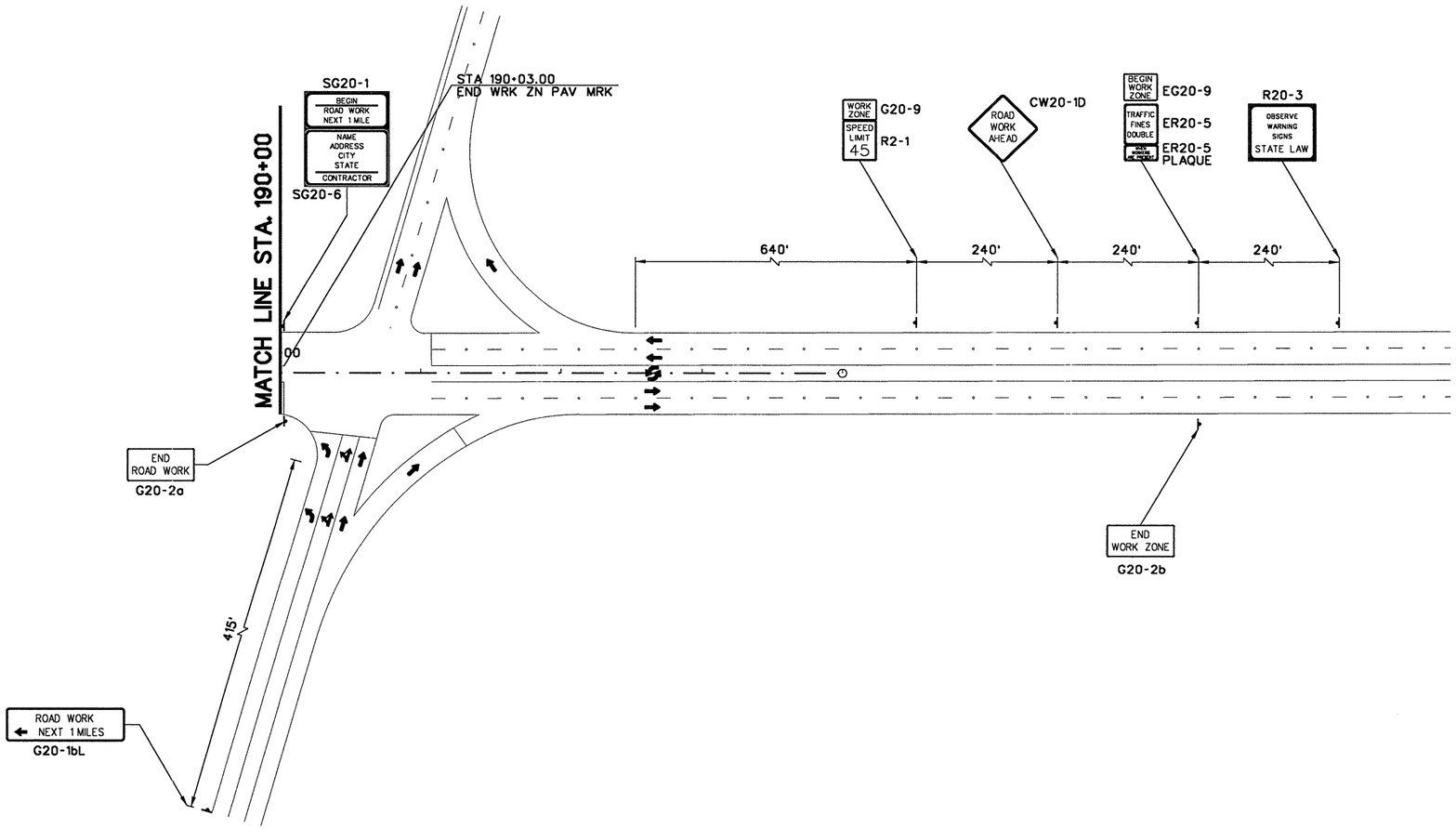

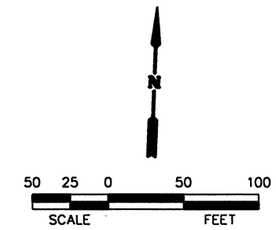

LEGEND

- PROPOSED CONSTRUCTION
- TEMPORARY PAVEMENT
- (A) WRK. ZN. PAV. MRK. (W) (4") (SLD) (REMOV)
- (B) WRK. ZN. PAV. MRK. (W) (4") (BRK) (REMOV)
- (C) WRK. ZN. PAV. MRK. (Y) (4") (SLD) (REMOV)
- (D) WRK. ZN. PAV. MRK. (Y) (4") (BRK) (REMOV)
- (E) WRK. ZN. PAV. MRK. (W) (8") (SLD) (REMOV)
- (H) WRK. ZN. PAV. MRK. (W) (24") (SLD) (REMOV)
- (K) WRK. ZN. PAV. MRK. (W) (ARROW) (REMOV)
- (L) WRK. ZN. PAV. MRK. (W) (WORD) (REMOV)
- (M) WRK. ZN. PAV. MRK. (W) (4") (SLD) (NON-REMOV)
- (N) WRK. ZN. PAV. MRK. (W) (4") (BRK) (NON-REMOV)
- (O) WRK. ZN. PAV. MRK. (Y) (4") (SLD) (NON-REMOV)
- (P) WRK. ZN. PAV. MRK. (Y) (4") (BRK) (NON-REMOV)
- (Q) WRK. ZN. PAV. MRK. (W) (8") (SLD) (NON-REMOV)
- (S) WRK. ZN. PAV. MRK. (W) (8") (LNDP) (NON-REMOV)
- (T) WRK. ZN. PAV. MRK. (W) (24") (SLD) (NON-REMOV)
- (U) WRK. ZN. PAV. MRK. (Y) (24") (SLD) (NON-REMOV)
- (V) WRK. ZN. PAV. MRK. (W) (ARROW) (NON-REMOV)
- (W) WRK. ZN. PAV. MRK. (W) (WORD) (NON-REMOV)
- (X) RAIS. PAV. MRK. (CL. B) (REFL.) TY. II-A-A
- (Y) RAIS. PAV. MRK. (CL. B) (REFL.) TY. I-C
- (TY III) BARRICADE
- LOW PROFILE CONC. BARRIER (L.P.C.B.)

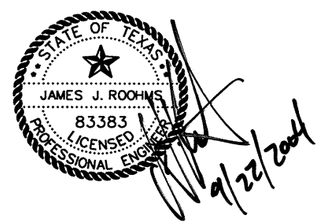

NO.	REVISION	BY	DATE

CP&Y Chiang, Patel & Yerby, Inc.

© 2004

Texas Department of Transportation

SH 29

TRAFFIC CONTROL PLANS

PHASE 1, STEP 1

STA. 190+00 TO END PROJECT

		FED. ROAD DIV. NO.	STATE	FEDERAL AID PROJECT NO.				SHEET NO.
Designed:	KGM	6	TEXAS	CC 337-1-29				2.5
Checked:	JJR	STATE DIST. NO.	COUNTY	CONTROL NO.	SECTION NO.	JOB NO.	HIGHWAY NO.	
Drawn:	KGM	14	WILLIAMSON	0337	01	029	SH 29	
Checked:	JJR							

...\wa3\west\common\533way1007.100 09/21/2004 04:27:50 PM

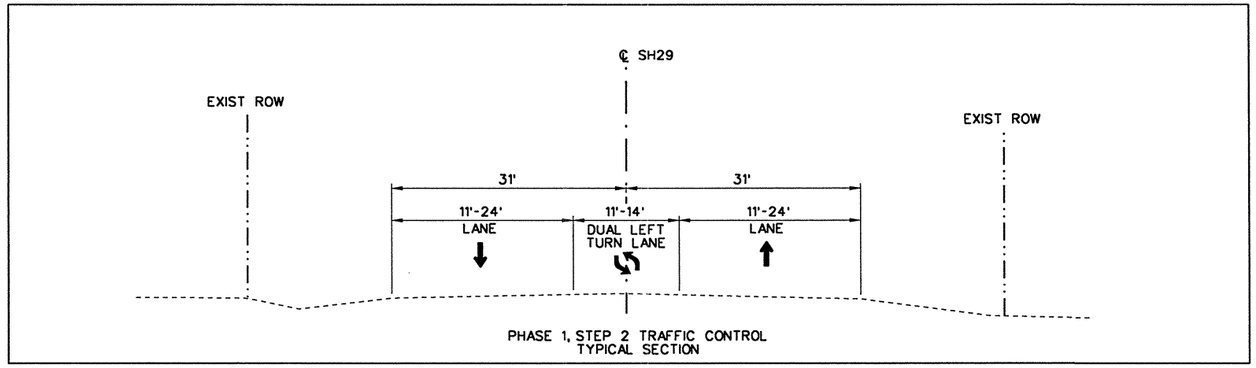

PHASE 1, STEP 2 TRAFFIC CONTROL
TYPICAL SECTION

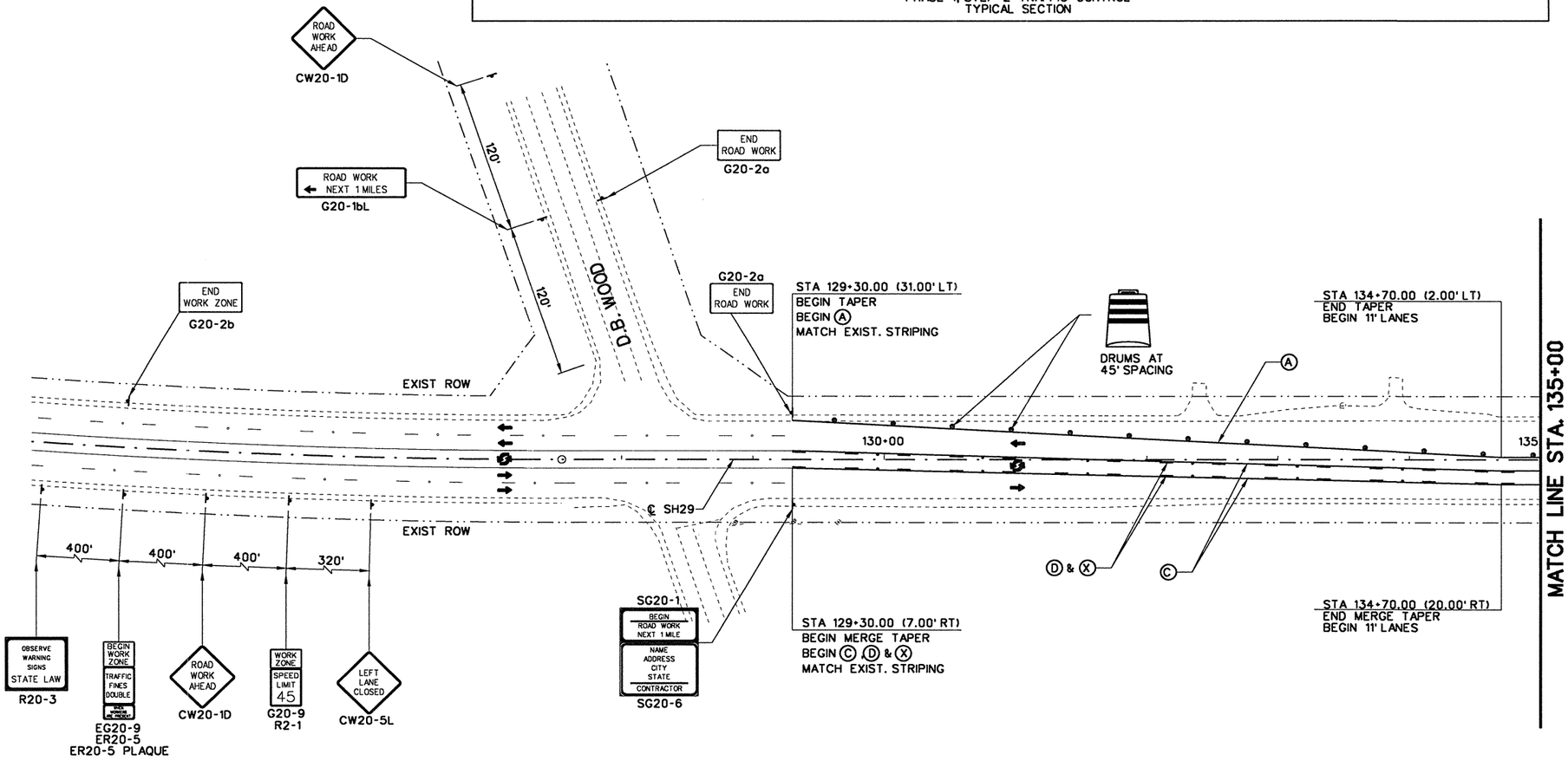

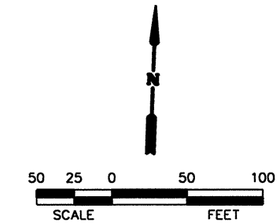

LEGEND

- PROPOSED CONSTRUCTION
- TEMPORARY PAVEMENT
- Ⓐ WRK. ZN. PAV. MRK. (W) (4") (SLD) (REMOV)
- Ⓑ WRK. ZN. PAV. MRK. (W) (4") (BRK) (REMOV)
- Ⓒ WRK. ZN. PAV. MRK. (Y) (4") (SLD) (REMOV)
- Ⓓ WRK. ZN. PAV. MRK. (Y) (4") (BRK) (REMOV)
- Ⓔ WRK. ZN. PAV. MRK. (W) (8") (SLD) (REMOV)
- Ⓗ WRK. ZN. PAV. MRK. (W) (24") (SLD) (REMOV)
- Ⓚ WRK. ZN. PAV. MRK. (W) (ARROW) (REMOV)
- Ⓛ WRK. ZN. PAV. MRK. (W) (WORD) (REMOV)
- Ⓜ WRK. ZN. PAV. MRK. (W) (4") (SLD) (NON-REMOV)
- Ⓝ WRK. ZN. PAV. MRK. (W) (4") (BRK) (NON-REMOV)
- Ⓞ WRK. ZN. PAV. MRK. (Y) (4") (SLD) (NON-REMOV)
- Ⓟ WRK. ZN. PAV. MRK. (Y) (4") (BRK) (NON-REMOV)
- Ⓠ WRK. ZN. PAV. MRK. (W) (8") (SLD) (NON-REMOV)
- Ⓢ WRK. ZN. PAV. MRK. (W) (8") (LNDP) (NON-REMOV)
- Ⓣ WRK. ZN. PAV. MRK. (W) (24") (SLD) (NON-REMOV)
- Ⓤ WRK. ZN. PAV. MRK. (Y) (24") (SLD) (NON-REMOV)
- Ⓥ WRK. ZN. PAV. MRK. (W) (ARROW) (NON-REMOV)
- Ⓦ WRK. ZN. PAV. MRK. (W) (WORD) (NON-REMOV)
- Ⓧ RAIS. PAV. MRK. (CL. B) (REFL.) TY. II-A-A
- Ⓨ RAIS. PAV. MRK. (CL. B) (REFL.) TY. I-C
- (TY III) BARRICADE
- LOW PROFILE CONC. BARRIER (L.P.C.B.)

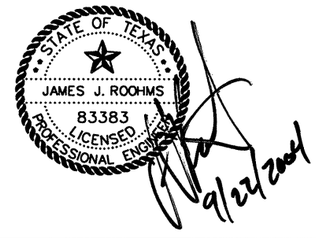

NO.	REVISION	BY	DATE

CP&Y Chiang, Patel & Yerby, Inc.

© 2004

Texas Department of Transportation

SH 29

TRAFFIC CONTROL PLANS

PHASE 1, STEP 2
BEGIN PROJECT TO STA 135+00

Designed: KGM	FED. ROAD DIV. NO.	STATE	FEDERAL AID PROJECT NO.			SHEET NO.
Checked: JJR	6	TEXAS	CC 337-1-29			20
Drawn: KGM	STATE DIST. NO.	COUNTY	CONTROL NO.	SECTION NO.	JOB NO.	HIGHWAY NO.
Checked: JJR	14	WILLIAMSON	0337	01	029	SH 29

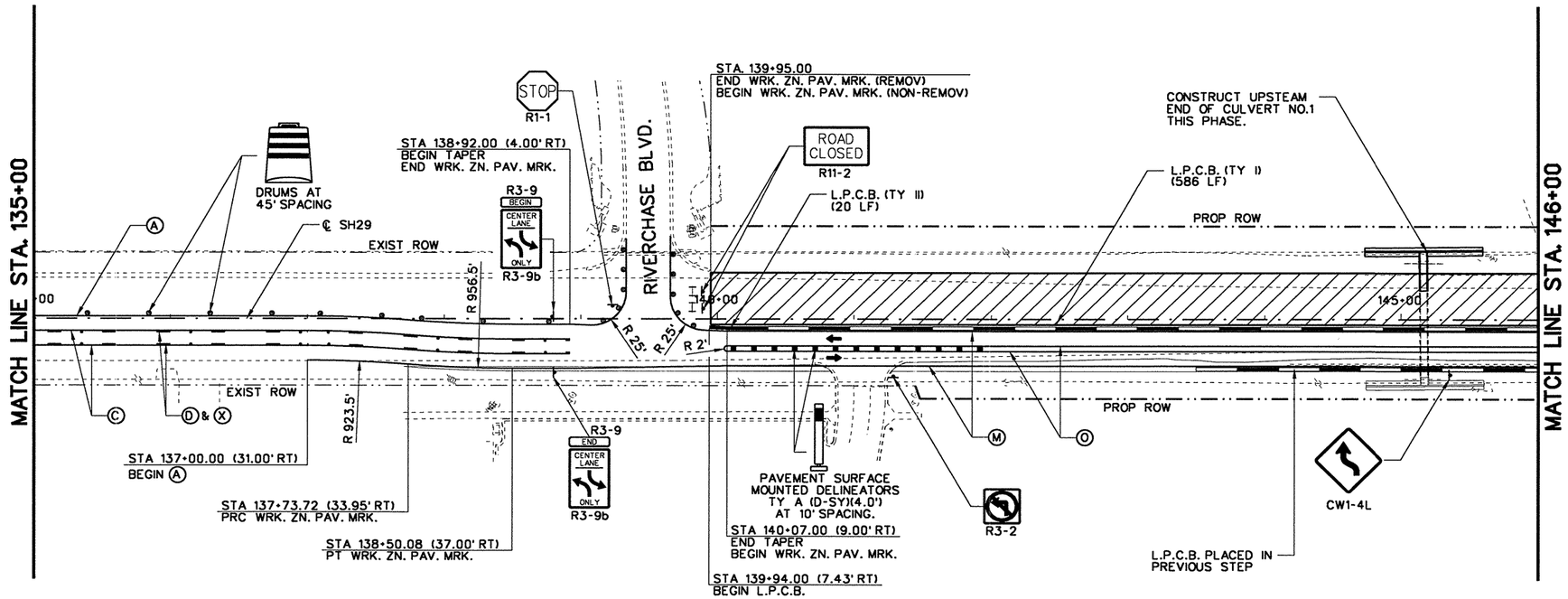

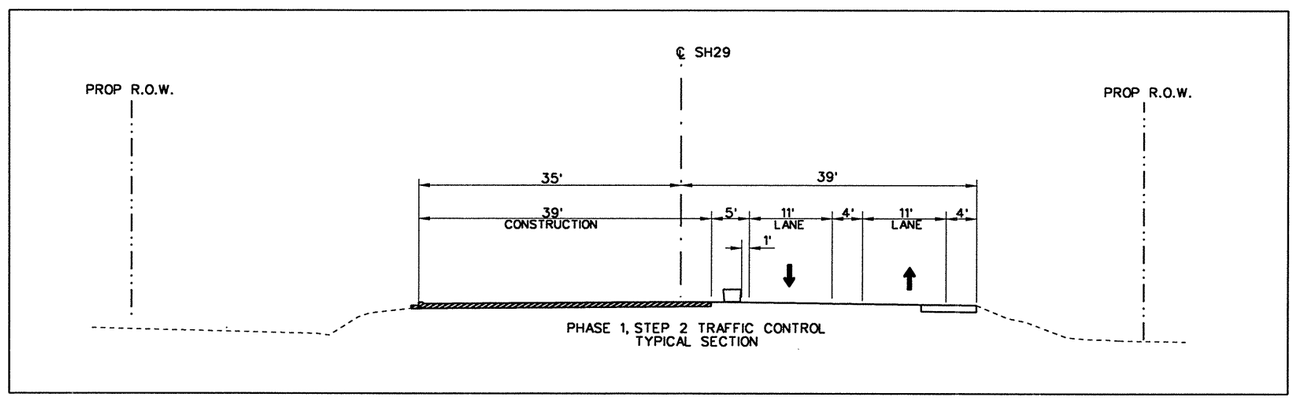

PHASE 1, STEP 2 TRAFFIC CONTROL
TYPICAL SECTION

N

50 25 0 50 100

SCALE FEET

LEGEND

- PROPOSED CONSTRUCTION
- TEMPORARY PAVEMENT
- Ⓐ WRK. ZN. PAV. MRK. (W) (4") (SLD) (REMOV)
- Ⓑ WRK. ZN. PAV. MRK. (W) (4") (BRK) (REMOV)
- Ⓒ WRK. ZN. PAV. MRK. (Y) (4") (SLD) (REMOV)
- Ⓓ WRK. ZN. PAV. MRK. (Y) (4") (BRK) (REMOV)
- Ⓔ WRK. ZN. PAV. MRK. (W) (8") (SLD) (REMOV)
- Ⓗ WRK. ZN. PAV. MRK. (W) (24") (SLD) (REMOV)
- Ⓚ WRK. ZN. PAV. MRK. (W) (ARROW) (REMOV)
- Ⓛ WRK. ZN. PAV. MRK. (W) (WORD) (REMOV)
- Ⓜ WRK. ZN. PAV. MRK. (W) (4") (SLD) (NON-REMOV)
- Ⓝ WRK. ZN. PAV. MRK. (W) (4") (BRK) (NON-REMOV)
- Ⓞ WRK. ZN. PAV. MRK. (Y) (4") (SLD) (NON-REMOV)
- Ⓟ WRK. ZN. PAV. MRK. (Y) (4") (BRK) (NON-REMOV)
- Ⓠ WRK. ZN. PAV. MRK. (W) (8") (SLD) (NON-REMOV)
- Ⓢ WRK. ZN. PAV. MRK. (W) (8") (LNDP) (NON-REMOV)
- Ⓣ WRK. ZN. PAV. MRK. (W) (24") (SLD) (NON-REMOV)
- Ⓤ WRK. ZN. PAV. MRK. (Y) (24") (SLD) (NON-REMOV)
- Ⓥ WRK. ZN. PAV. MRK. (W) (ARROW) (NON-REMOV)
- Ⓦ WRK. ZN. PAV. MRK. (W) (WORD) (NON-REMOV)
- Ⓧ RAIS. PAV. MRK. (CL. B) (REFL.) TY. II-A-A
- Ⓨ RAIS. PAV. MRK. (CL. B) (REFL.) TY. I-C
- (TY III) BARRICADE
- LOW PROFILE CONC. BARRIER (L.P.C.B.)

NOTES:

1. ACCESS TO PRIVATE PROPERTY SHALL BE MAINTAINED AT ALL TIMES.

STATE OF TEXAS
JAMES J. ROCHAS
83383
LICENSED
PROFESSIONAL ENGINEER
9/27/2004

NO.	REVISION	BY	DATE

CP&Y Chiang, Patel & Yerby, Inc.

© 2004

Texas Department of Transportation

SH 29

TRAFFIC CONTROL PLANS

PHASE 1, STEP 2

STA. 135+00 TO STA. 146+00

		FED. ROAD DIV. NO.	STATE	FEDERAL AID PROJECT NO.				SHEET NO.
Designed:	KGM	6	TEXAS	CC 337-1-29				27
Checked:	JJR	STATE DIST. NO.	COUNTY	CONTROL NO.	SECTION NO.	JOB NO.	HIGHWAY NO.	
Drawn:	KGM	14	WILLIAMSON	0337	01	029	SH 29	
Checked:	JJR							

2 OF 7

...\wa3\west\common\533way1102.100 09/21/2004 04:27:54 PM

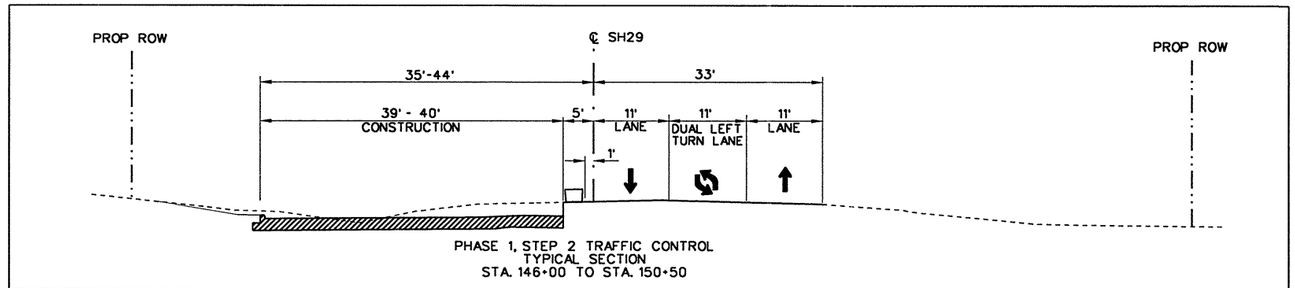

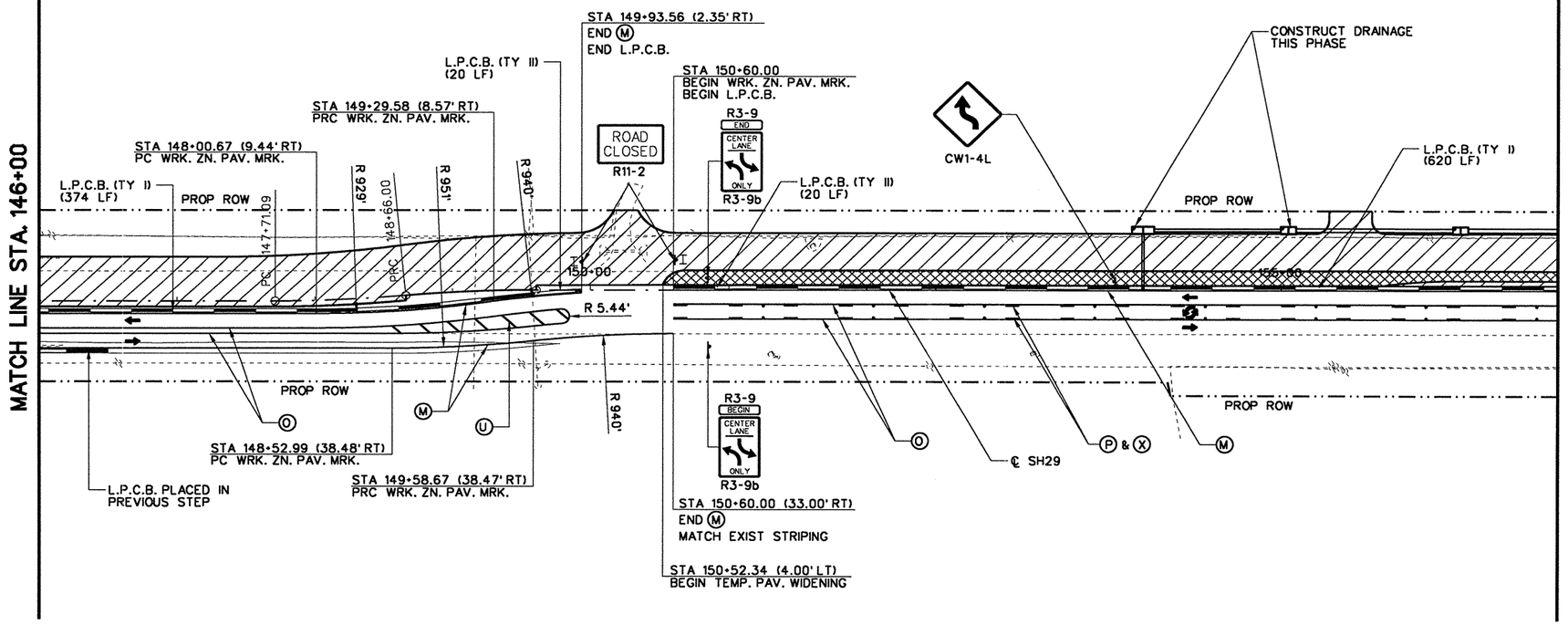

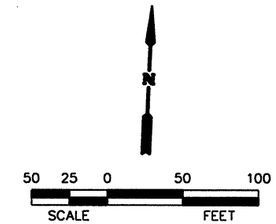

LEGEND

- PROPOSED CONSTRUCTION
- TEMPORARY PAVEMENT
- Ⓐ WRK. ZN. PAV. MRK. (W) (4") (SLD) (REMOV)
- Ⓑ WRK. ZN. PAV. MRK. (W) (4") (BRK) (REMOV)
- Ⓒ WRK. ZN. PAV. MRK. (Y) (4") (SLD) (REMOV)
- Ⓓ WRK. ZN. PAV. MRK. (Y) (4") (BRK) (REMOV)
- Ⓔ WRK. ZN. PAV. MRK. (W) (8") (SLD) (REMOV)
- Ⓗ WRK. ZN. PAV. MRK. (W) (24") (SLD) (REMOV)
- Ⓚ WRK. ZN. PAV. MRK. (W) (ARROW) (REMOV)
- Ⓛ WRK. ZN. PAV. MRK. (W) (WORD) (REMOV)
- Ⓜ WRK. ZN. PAV. MRK. (W) (4") (SLD) (NON-REMOV)
- Ⓝ WRK. ZN. PAV. MRK. (W) (4") (BRK) (NON-REMOV)
- Ⓞ WRK. ZN. PAV. MRK. (Y) (4") (SLD) (NON-REMOV)
- Ⓟ WRK. ZN. PAV. MRK. (Y) (4") (BRK) (NON-REMOV)
- Ⓠ WRK. ZN. PAV. MRK. (W) (8") (SLD) (NON-REMOV)
- Ⓢ WRK. ZN. PAV. MRK. (W) (8") (LNDP) (NON-REMOV)
- Ⓣ WRK. ZN. PAV. MRK. (W) (24") (SLD) (NON-REMOV)
- Ⓤ WRK. ZN. PAV. MRK. (Y) (24") (SLD) (NON-REMOV)
- Ⓥ WRK. ZN. PAV. MRK. (W) (ARROW) (NON-REMOV)
- Ⓦ WRK. ZN. PAV. MRK. (W) (WORD) (NON-REMOV)
- Ⓧ RAIS. PAV. MRK. (CL. B) (REFL.) TY. II-A-A
- Ⓨ RAIS. PAV. MRK. (CL. B) (REFL.) TY. I-C
- (TY III) BARRICADE
- LOW PROFILE CONC. BARRIER (L.P.C.B.)

NOTES:

1. ACCESS TO PRIVATE PROPERTY SHALL BE MAINTAINED AT ALL TIMES.

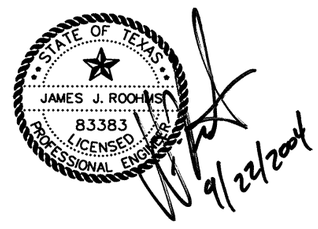

NO.	REVISION	BY	DATE

Chiang, Patel & Yerby, Inc.

© 2004

Texas Department of Transportation

SH 29

TRAFFIC CONTROL PLANS

PHASE 1, STEP 2

STA. 146+00 TO STA. 157+00

Designed:	KGM	FED. ROAD DIV. NO.	STATE	FEDERAL AID PROJECT NO.				SHEET NO.	
Checked:	JJR	6	TEXAS	CC 337-1-29				2B	
Drawn:	KGM	STATE DIST. NO.	COUNTY		CONTROL NO.	SECTION NO.	JOB NO.	HIGHWAY NO.	
Checked:	JJR	14	WILLIAMSON		0337	01	029	SH 29	

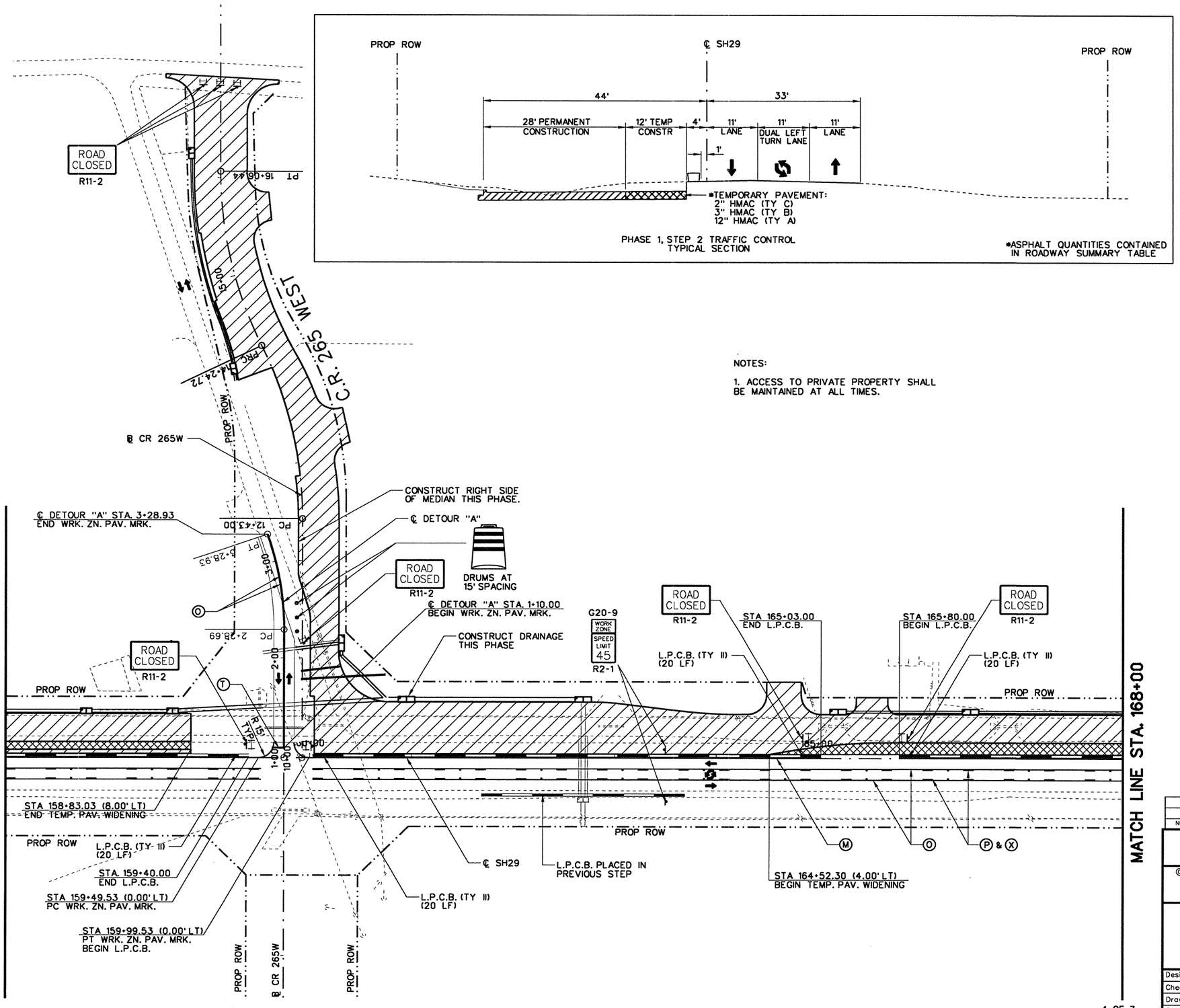

STATE OF TEXAS
JAMES J. ROOHMS
83383
LICENSED
PROFESSIONAL ENGINEER
9/22/2004

NO.	REVISION	BY	DATE

CP&Y Chiang, Patel & Yerby, Inc.

© 2004

Texas Department of Transportation

SH 29

TRAFFIC CONTROL PLANS

PHASE 1, STEP 2

STA. 157+00 TO STA. 168+00

Designed:	KGM	FED. ROAD DIV. NO.	STATE	FEDERAL AID PROJECT NO.					SHEET NO.
Checked:	JJR	6	TEXAS	CC 337-1-29					29
Drawn:	KGM	STATE DIST. NO.	COUNTY		CONTROL NO.	SECTION NO.	JOB NO.		HIGHWAY NO.
Checked:	JJR	14	WILLIAMSON		0337	01	029		SH 29

...\wa3\west\common\533way1104.100 09/21/2004 04:27:59 PM

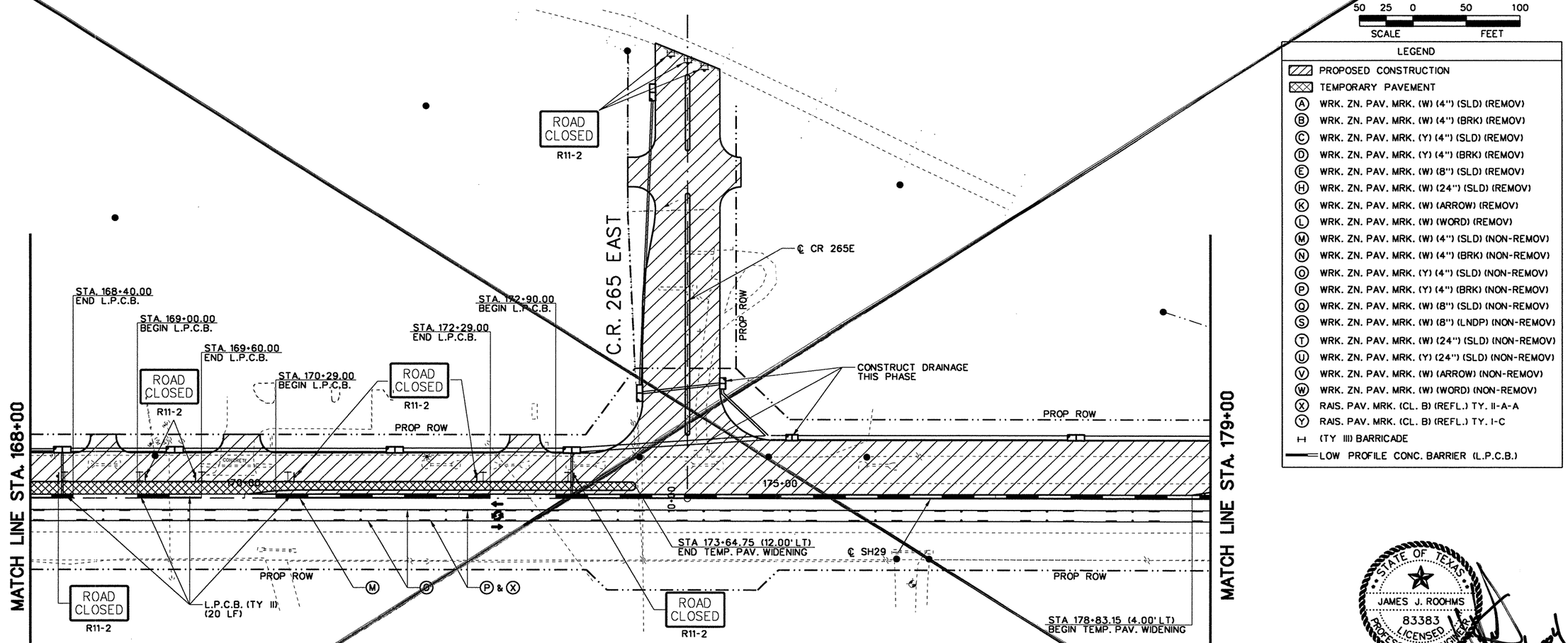

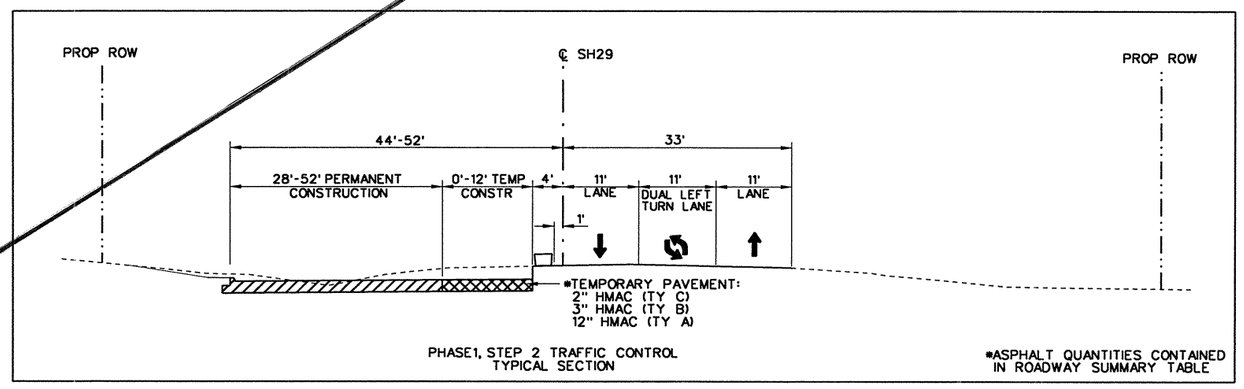

PHASE1, STEP 2 TRAFFIC CONTROL
TYPICAL SECTION

*ASPHALT QUANTITIES CONTAINED IN ROADWAY SUMMARY TABLE

NOTES:

1. ACCESS TO PRIVATE PROPERTY SHALL BE MAINTAINED AT ALL TIMES.

50 25 0 50 100
SCALE FEET

LEGEND

- PROPOSED CONSTRUCTION
- TEMPORARY PAVEMENT
- Ⓐ WRK. ZN. PAV. MRK. (W) (4") (SLD) (REMOV)
- Ⓑ WRK. ZN. PAV. MRK. (W) (4") (BRK) (REMOV)
- Ⓒ WRK. ZN. PAV. MRK. (Y) (4") (SLD) (REMOV)
- Ⓓ WRK. ZN. PAV. MRK. (Y) (4") (BRK) (REMOV)
- Ⓔ WRK. ZN. PAV. MRK. (W) (8") (SLD) (REMOV)
- Ⓗ WRK. ZN. PAV. MRK. (W) (24") (SLD) (REMOV)
- Ⓚ WRK. ZN. PAV. MRK. (W) (ARROW) (REMOV)
- Ⓛ WRK. ZN. PAV. MRK. (W) (WORD) (REMOV)
- Ⓜ WRK. ZN. PAV. MRK. (W) (4") (SLD) (NON-REMOV)
- Ⓝ WRK. ZN. PAV. MRK. (W) (4") (BRK) (NON-REMOV)
- Ⓞ WRK. ZN. PAV. MRK. (Y) (4") (SLD) (NON-REMOV)
- Ⓟ WRK. ZN. PAV. MRK. (Y) (4") (BRK) (NON-REMOV)
- Ⓠ WRK. ZN. PAV. MRK. (W) (8") (SLD) (NON-REMOV)
- Ⓢ WRK. ZN. PAV. MRK. (W) (8") (LNDP) (NON-REMOV)
- Ⓣ WRK. ZN. PAV. MRK. (W) (24") (SLD) (NON-REMOV)
- Ⓤ WRK. ZN. PAV. MRK. (Y) (24") (SLD) (NON-REMOV)
- Ⓥ WRK. ZN. PAV. MRK. (W) (ARROW) (NON-REMOV)
- Ⓦ WRK. ZN. PAV. MRK. (W) (WORD) (NON-REMOV)
- Ⓧ RAIS. PAV. MRK. (CL. B) (REFL.) TY. II-A-A
- Ⓨ RAIS. PAV. MRK. (CL. B) (REFL.) TY. I-C
- (TY III) BARRICADE
- LOW PROFILE CONC. BARRIER (L.P.C.B.)

STATE OF TEXAS
JAMES J. ROOHMS
83383
LICENSED
PROFESSIONAL ENGINEER
9/22/2004

NO.	REVISION	BY	DATE

CP&Y Chiang, Patel & Yerby, Inc.

© 2004

Texas Department of Transportation

SH 29

TRAFFIC CONTROL PLANS

PHASE 1, STEP 2
STA. 168+00 TO STA. 179+00

Designed:	KGM	FED. ROAD DIV. NO.	STATE	FEDERAL AID PROJECT NO.				SHEET NO.
Checked:	JJR	6	TEXAS	CC 537-1-29				30
Drawn:	KGM	STATE DIST. NO.	COUNTY	CONTROL NO.	SECTION NO.	JOB NO.		HIGHWAY NO.
Checked:	JJR	14	WILLIAMSON	0337	01	029		SH 29

...\wa3\west\common\533way1105.100 09/21/2004 04:28:01 PM

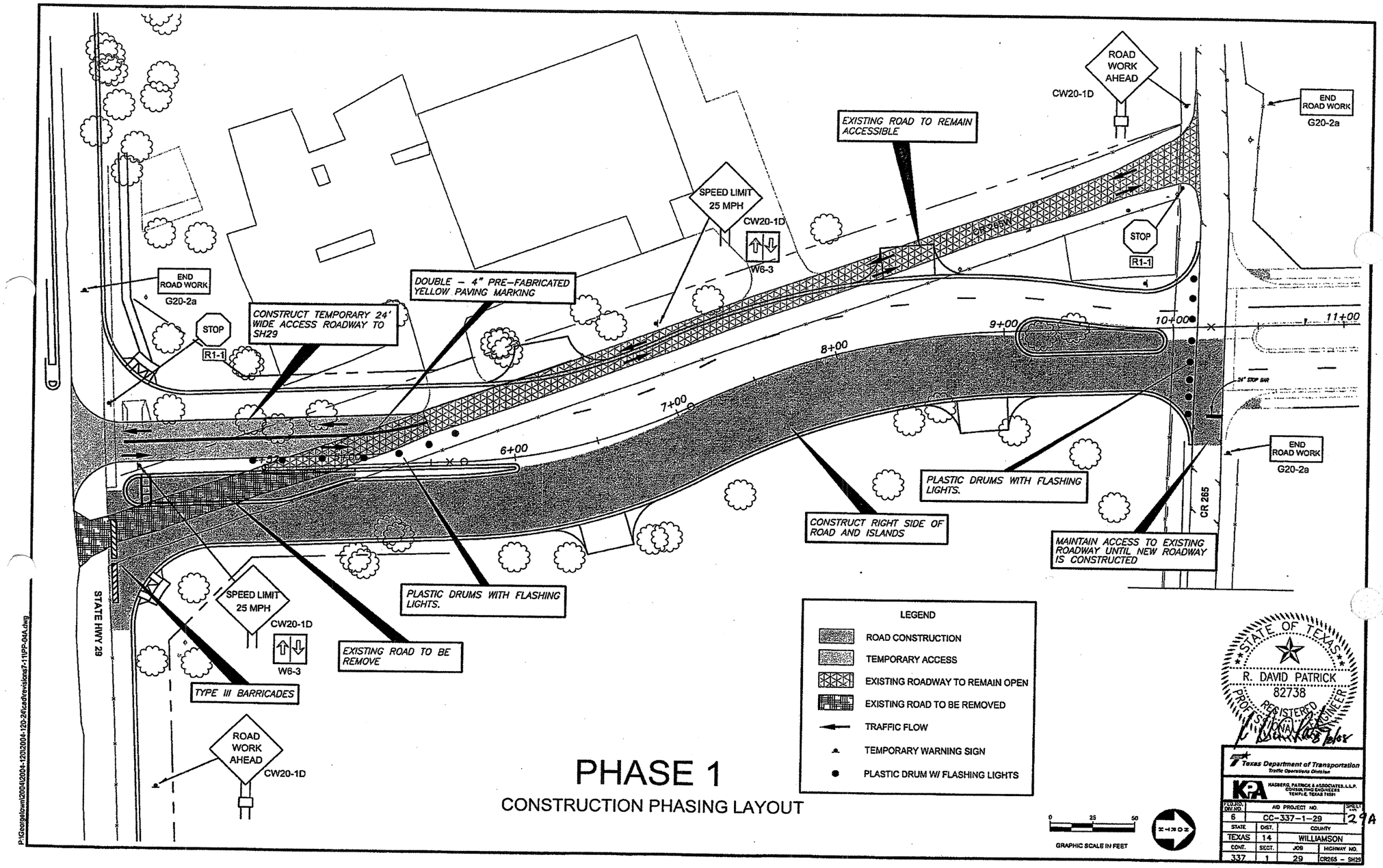

PHASE 1

CONSTRUCTION PHASING LAYOUT

P:\Georgetown\200402004-120\2004-120-24\cad\revisions7-11\PP-04A.dwg

STATE OF TEXAS
R. DAVID PATRICK
82738
REGISTERED PROFESSIONAL ENGINEER
8 Feb 08

Texas Department of Transportation
Traffic Operations Division

KASBERG, PATRICK & ASSOCIATES, L.L.P.
CONSULTING ENGINEERS
TEMPLE, TEXAS 76501

FED.RD. DIV.NO.	AID PROJECT NO.		SHEET NO.
6	CC-337-1-29		29A
STATE	DIST.	COUNTY	
TEXAS	14	WILLIAMSON	
CONT.	SECT.	JOB	HIGHWAY NO.
337	1	29	CR265 – SH29

C.O.#6

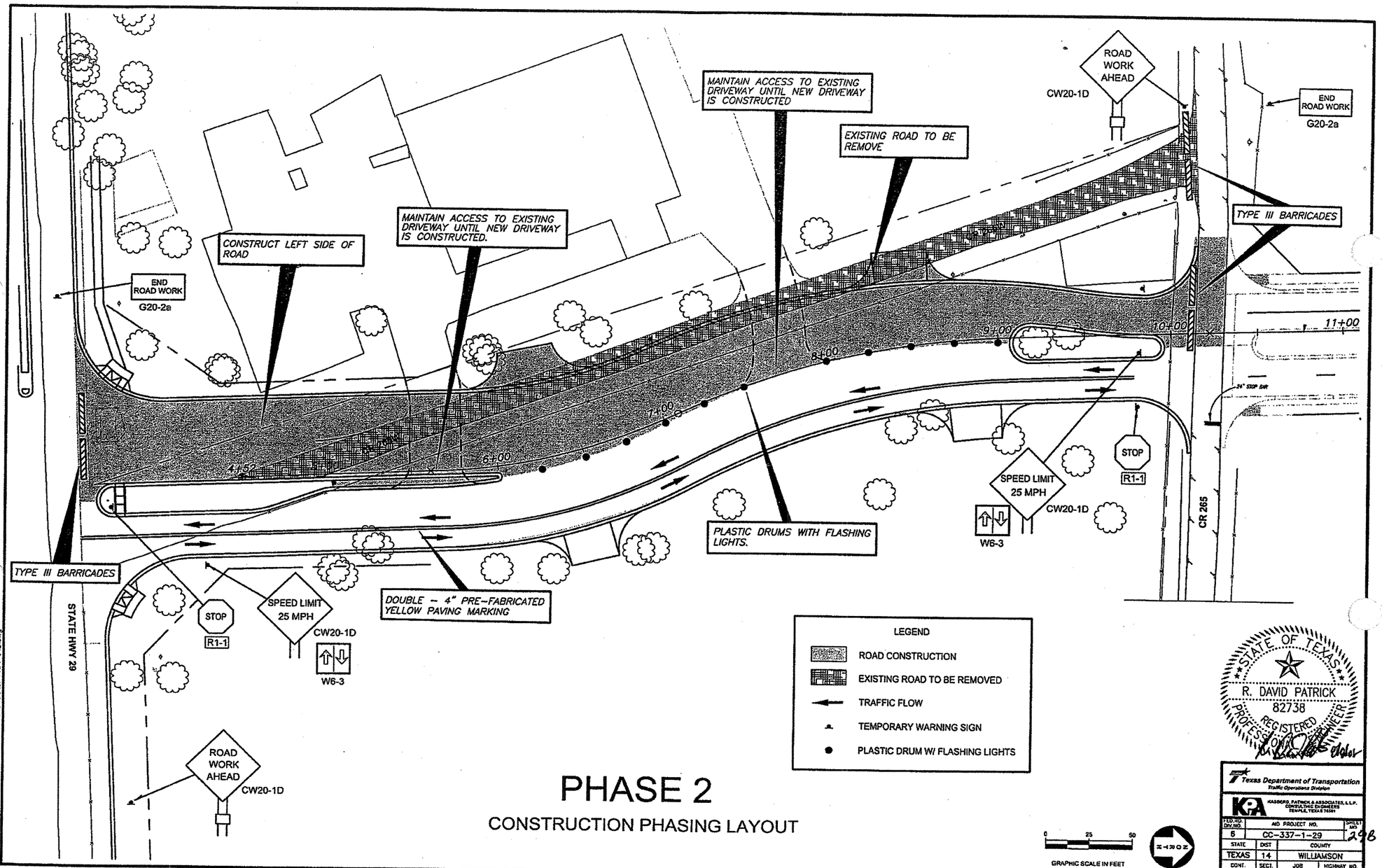

P:\Georgetown\2004\2004-120\2004-120-24\cadfrewsions\7-11\PP-04B.dwg

PHASE 2

CONSTRUCTION PHASING LAYOUT

STATE OF TEXAS
R. DAVID PATRICK
82738
REGISTERED
PROFESSIONAL ENGINEER

Texas Department of Transportation
Traffic Operations Division

KASBERG, PATRICK & ASSOCIATES, L.L.P.
CONSULTING ENGINEERS
TEMPLE, TEXAS 76501

FED.RD. DIV.NO.	FED. AID PROJECT NO.		SHEET NO.
6	CC-337-1-29		29B
STATE	DIST	COUNTY	
TEXAS	14	WILLIAMSON	
CONT.	SECT.	JOB	HIGHWAY NO.
337	1	29	CR265 – SH29

C.O. #6

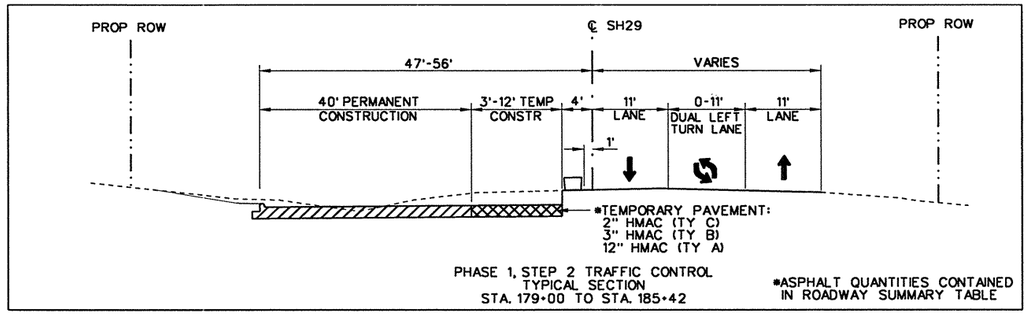

PHASE 1, STEP 2 TRAFFIC CONTROL
TYPICAL SECTION
STA. 179+00 TO STA. 185+42

*ASPHALT QUANTITIES CONTAINED IN ROADWAY SUMMARY TABLE

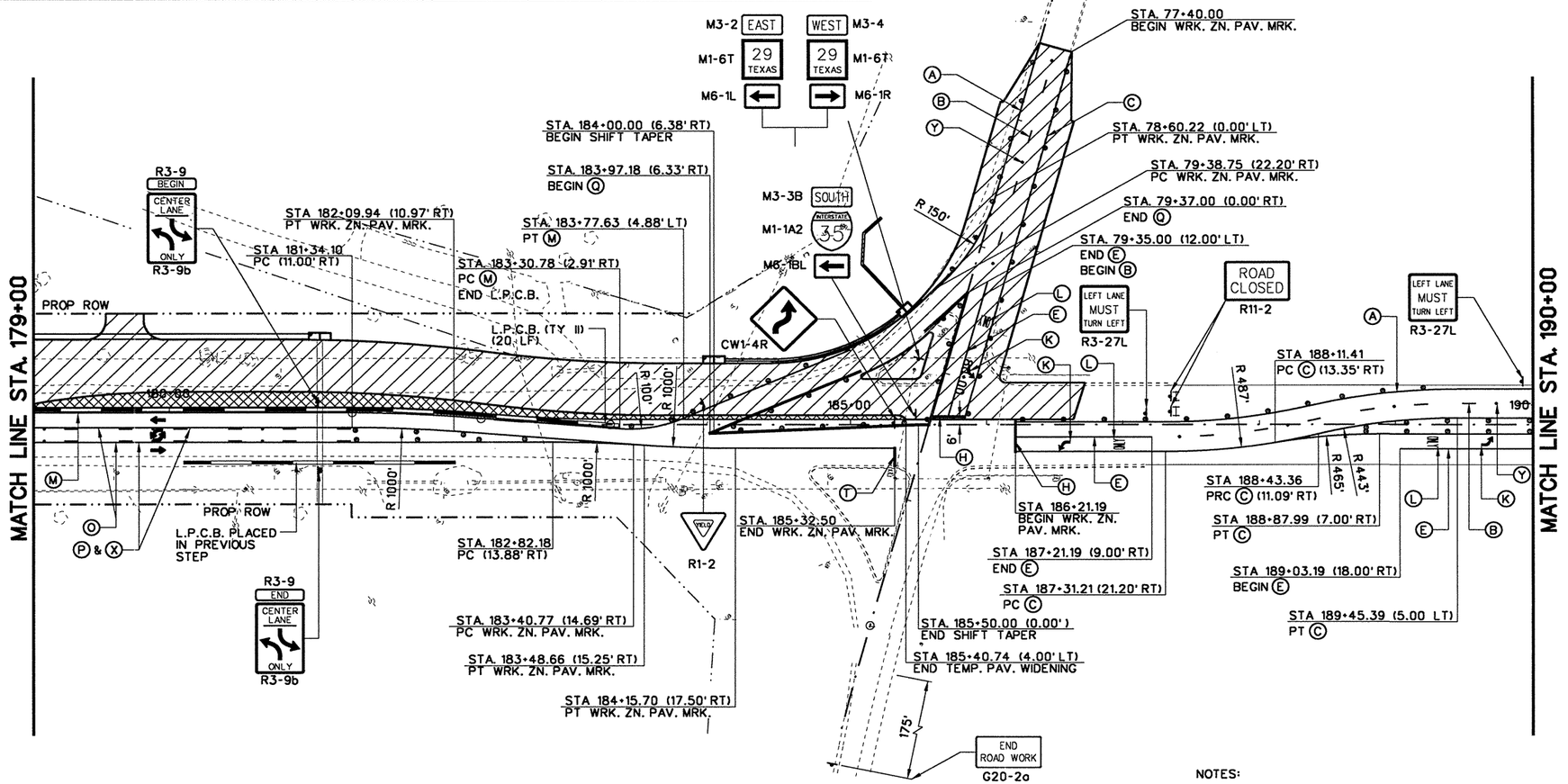

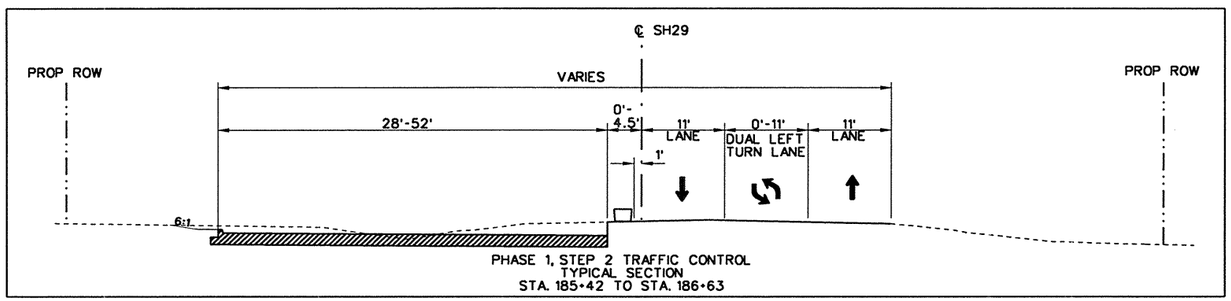

PHASE 1, STEP 2 TRAFFIC CONTROL
TYPICAL SECTION
STA. 185+42 TO STA. 186+63

NOTES:

1. ACCESS TO PRIVATE PROPERTY SHALL BE MAINTAINED AT ALL TIMES.

2. CONSTRUCTION OF IH 35 SOUTHBOUND FRONTAGE RD AND SH 29 INTERSECTION SHALL BE COMPLETED DURING NIGHTTIME HOURS ONLY. TRAFFIC SHALL BE RESTORED EACH MORNING TO THE CONFIGURATION SHOWN IN THE PLANS.

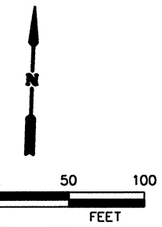

LEGEND

- PROPOSED CONSTRUCTION
- TEMPORARY PAVEMENT
- (A) WRK. ZN. PAV. MRK. (W) (4") (SLD) (REMOV)
- (B) WRK. ZN. PAV. MRK. (W) (4") (BRK) (REMOV)
- (C) WRK. ZN. PAV. MRK. (Y) (4") (SLD) (REMOV)
- (D) WRK. ZN. PAV. MRK. (Y) (4") (BRK) (REMOV)
- (E) WRK. ZN. PAV. MRK. (W) (8") (SLD) (REMOV)
- (H) WRK. ZN. PAV. MRK. (W) (24") (SLD) (REMOV)
- (K) WRK. ZN. PAV. MRK. (W) (ARROW) (REMOV)
- (L) WRK. ZN. PAV. MRK. (W) (WORD) (REMOV)
- (M) WRK. ZN. PAV. MRK. (W) (4") (SLD) (NON-REMOV)
- (N) WRK. ZN. PAV. MRK. (W) (4") (BRK) (NON-REMOV)
- (O) WRK. ZN. PAV. MRK. (Y) (4") (SLD) (NON-REMOV)
- (P) WRK. ZN. PAV. MRK. (Y) (4") (BRK) (NON-REMOV)
- (Q) WRK. ZN. PAV. MRK. (W) (8") (SLD) (NON-REMOV)
- (S) WRK. ZN. PAV. MRK. (W) (8") (LNDP) (NON-REMOV)
- (T) WRK. ZN. PAV. MRK. (W) (24") (SLD) (NON-REMOV)
- (U) WRK. ZN. PAV. MRK. (Y) (24") (SLD) (NON-REMOV)
- (V) WRK. ZN. PAV. MRK. (W) (ARROW) (NON-REMOV)
- (W) WRK. ZN. PAV. MRK. (W) (WORD) (NON-REMOV)
- (X) RAIS. PAV. MRK. (CL. B) (REFL.) TY. II-A-A
- (Y) RAIS. PAV. MRK. (CL. B) (REFL.) TY. I-C
- (TY III) BARRICADE
- LOW PROFILE CONC. BARRIER (L.P.C.B.)

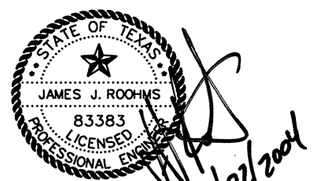

NO.	REVISION	BY	DATE

CP&Y Chiang, Patel & Yerby, Inc.

© 2004

Texas Department of Transportation

SH 29

TRAFFIC CONTROL PLANS

PHASE 1, STEP 2

STA. 179+00 TO STA. 190+00

Designed:	KGM	FED. ROAD DIV. NO.	STATE	FEDERAL AID PROJECT NO.				SHEET NO.	
Checked:	JJR	6	TEXAS	CC 337-1-29				31	
Drawn:	KGM	STATE DIST. NO.	COUNTY		CONTROL NO.	SECTION NO.	JOB NO.	HIGHWAY NO.	
Checked:	JJR	14	WILLIAMSON		0337	01	029	SH 29	

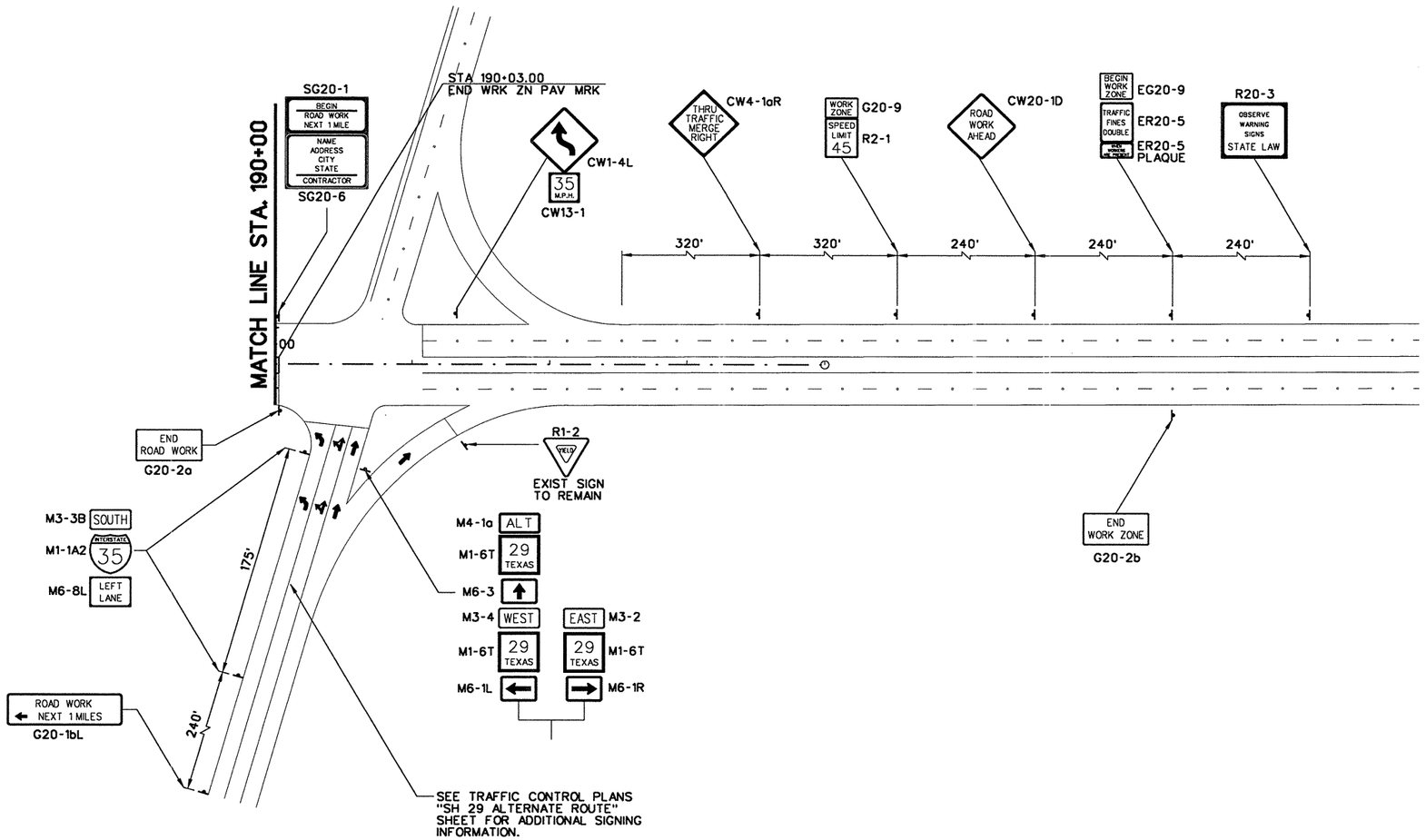

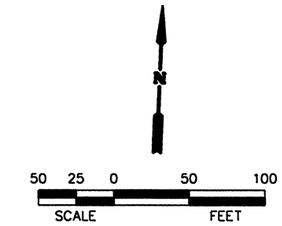

LEGEND

- PROPOSED CONSTRUCTION
- TEMPORARY PAVEMENT
- (A) WRK. ZN. PAV. MRK. (W) (4") (SLD) (REMOV)
- (B) WRK. ZN. PAV. MRK. (W) (4") (BRK) (REMOV)
- (C) WRK. ZN. PAV. MRK. (Y) (4") (SLD) (REMOV)
- (D) WRK. ZN. PAV. MRK. (Y) (4") (BRK) (REMOV)
- (E) WRK. ZN. PAV. MRK. (W) (8") (SLD) (REMOV)
- (H) WRK. ZN. PAV. MRK. (W) (24") (SLD) (REMOV)
- (K) WRK. ZN. PAV. MRK. (W) (ARROW) (REMOV)
- (L) WRK. ZN. PAV. MRK. (W) (WORD) (REMOV)
- (M) WRK. ZN. PAV. MRK. (W) (4") (SLD) (NON-REMOV)
- (N) WRK. ZN. PAV. MRK. (W) (4") (BRK) (NON-REMOV)
- (O) WRK. ZN. PAV. MRK. (Y) (4") (SLD) (NON-REMOV)
- (P) WRK. ZN. PAV. MRK. (Y) (4") (BRK) (NON-REMOV)
- (Q) WRK. ZN. PAV. MRK. (W) (8") (SLD) (NON-REMOV)
- (S) WRK. ZN. PAV. MRK. (W) (8") (LNDP) (NON-REMOV)
- (T) WRK. ZN. PAV. MRK. (W) (24") (SLD) (NON-REMOV)
- (U) WRK. ZN. PAV. MRK. (Y) (24") (SLD) (NON-REMOV)
- (V) WRK. ZN. PAV. MRK. (W) (ARROW) (NON-REMOV)
- (W) WRK. ZN. PAV. MRK. (W) (WORD) (NON-REMOV)
- (X) RAIS. PAV. MRK. (CL. B) (REFL.) TY. II-A-A
- (Y) RAIS. PAV. MRK. (CL. B) (REFL.) TY. I-C
- (TY III) BARRICADE
- LOW PROFILE CONC. BARRIER (L.P.C.B.)

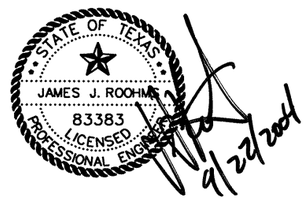

NO.	REVISION	BY	DATE

Chiang, Patel & Yerby, Inc.

© 2004

Texas Department of Transportation

SH 29

TRAFFIC CONTROL PLANS

PHASE 1, STEP 2

STA. 190+00 TO END PROJECT

Designed:	KGM	FED. ROAD DIV. NO.	STATE	FEDERAL AID PROJECT NO.				SHEET NO.
Checked:	JJR	6	TEXAS	CC 337-1-29				32
Drawn:	KGM	STATE DIST. NO.	COUNTY	CONTROL NO.	SECTION NO.	JOB NO.	HIGHWAY NO.	
Checked:	JJR	14	WILLIAMSON	0337	01	029	SH 29	

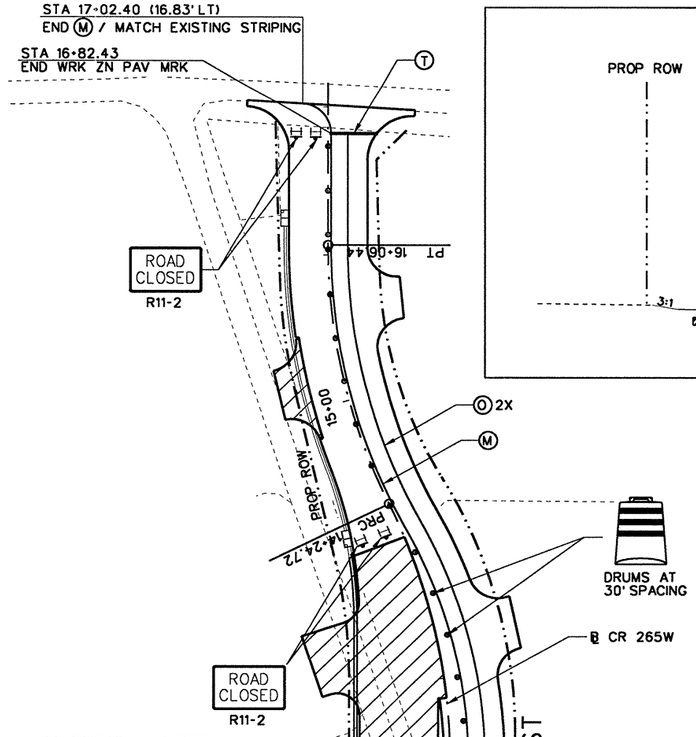

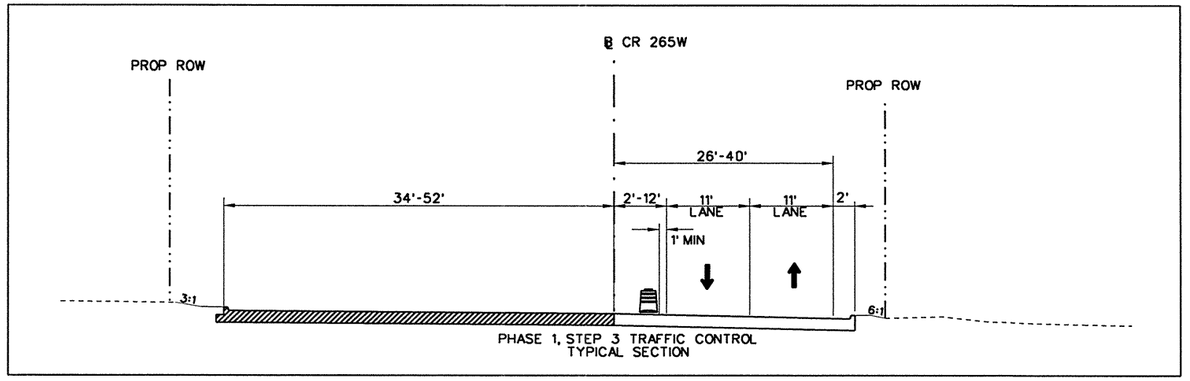

NOTES:

1. ACCESS TO PRIVATE PROPERTY SHALL BE MAINTAINED AT ALL TIMES.

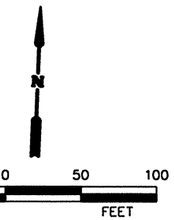

LEGEND

- PROPOSED CONSTRUCTION
- TEMPORARY PAVEMENT
- Ⓐ WRK. ZN. PAV. MRK. (W) (4") (SLD) (REMOV)
- Ⓑ WRK. ZN. PAV. MRK. (W) (4") (BRK) (REMOV)
- Ⓒ WRK. ZN. PAV. MRK. (Y) (4") (SLD) (REMOV)
- Ⓓ WRK. ZN. PAV. MRK. (Y) (4") (BRK) (REMOV)
- Ⓔ WRK. ZN. PAV. MRK. (W) (8") (SLD) (REMOV)
- Ⓗ WRK. ZN. PAV. MRK. (W) (24") (SLD) (REMOV)
- Ⓚ WRK. ZN. PAV. MRK. (W) (ARROW) (REMOV)
- Ⓛ WRK. ZN. PAV. MRK. (W) (WORD) (REMOV)
- Ⓜ WRK. ZN. PAV. MRK. (W) (4") (SLD) (NON-REMOV)
- Ⓝ WRK. ZN. PAV. MRK. (W) (4") (BRK) (NON-REMOV)
- Ⓞ WRK. ZN. PAV. MRK. (Y) (4") (SLD) (NON-REMOV)
- Ⓟ WRK. ZN. PAV. MRK. (Y) (4") (BRK) (NON-REMOV)
- Ⓠ WRK. ZN. PAV. MRK. (W) (8") (SLD) (NON-REMOV)
- Ⓢ WRK. ZN. PAV. MRK. (W) (8") (LNDP) (NON-REMOV)
- Ⓣ WRK. ZN. PAV. MRK. (W) (24") (SLD) (NON-REMOV)
- Ⓤ WRK. ZN. PAV. MRK. (Y) (24") (SLD) (NON-REMOV)
- Ⓥ WRK. ZN. PAV. MRK. (W) (ARROW) (NON-REMOV)
- Ⓦ WRK. ZN. PAV. MRK. (W) (WORD) (NON-REMOV)
- Ⓧ RAIS. PAV. MRK. (CL. B) (REFL.) TY. II-A-A
- Ⓨ RAIS. PAV. MRK. (CL. B) (REFL.) TY. I-C
- H (TY III) BARRICADE
- LOW PROFILE CONC. BARRIER (L.P.C.B.)

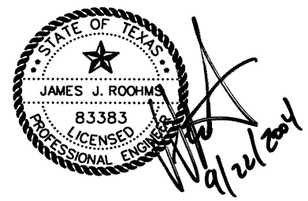

NO.	REVISION	BY	DATE

CP&Y Chiang, Patel & Yerby, Inc.

© 2004

Texas Department of Transportation

SH 29

TRAFFIC CONTROL PLANS
PHASE 1, STEP 3

		FED. ROAD DIV. NO.	STATE	FEDERAL AID PROJECT NO.				SHEET NO.
Designed:	KGM	6	TEXAS	CC 337-1-29				33
Checked:	JJR	STATE DIST. NO.	COUNTY		CONTROL NO.	SECTION NO.	JOB NO.	HIGHWAY NO.
Drawn:	KGM	14	WILLIAMSON		0337	01	029	SH 29
Checked:	JJR							

...\wa3\west\common\533way1201.100 09/21/2004 04:28:08 PM

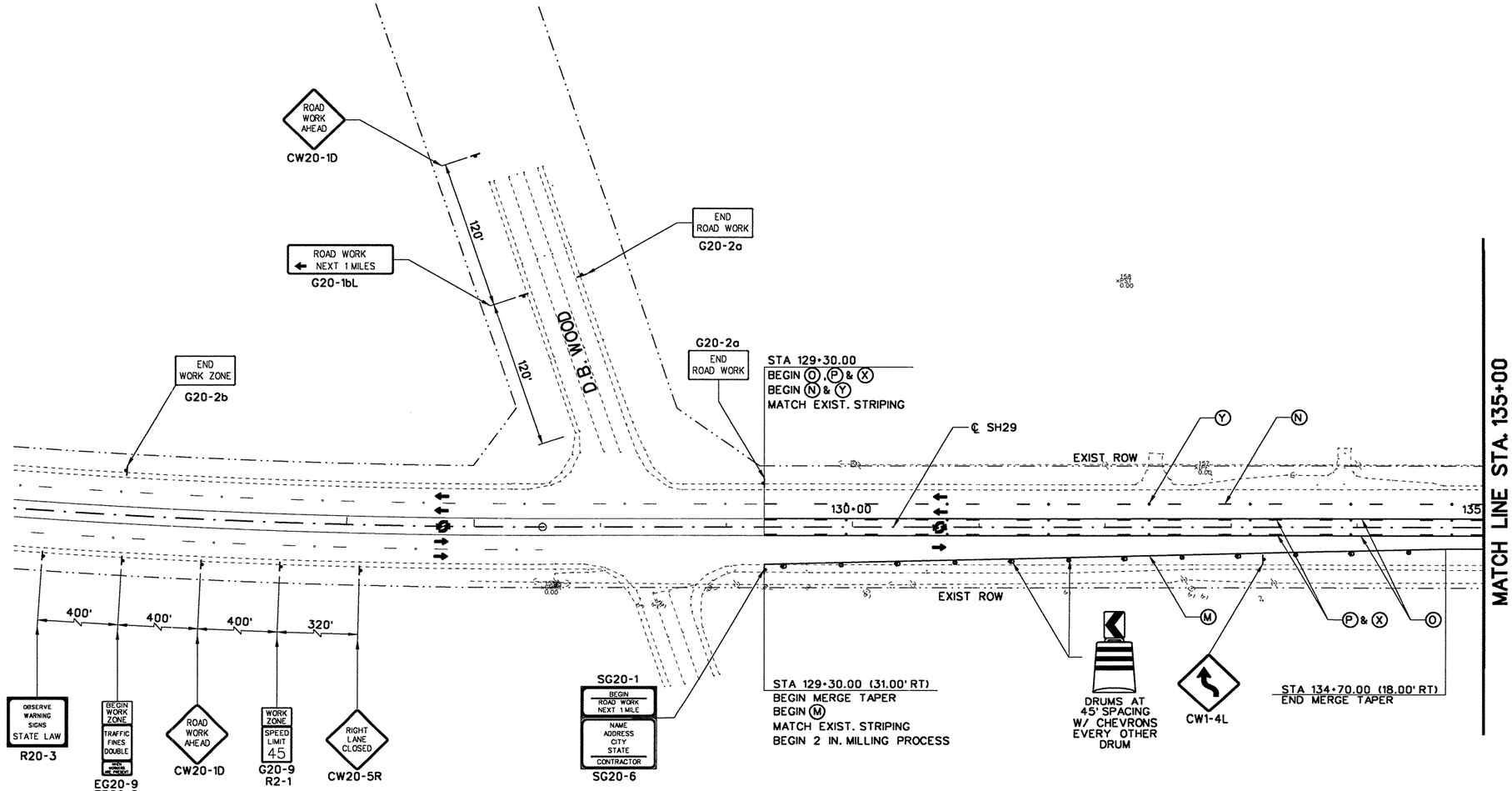

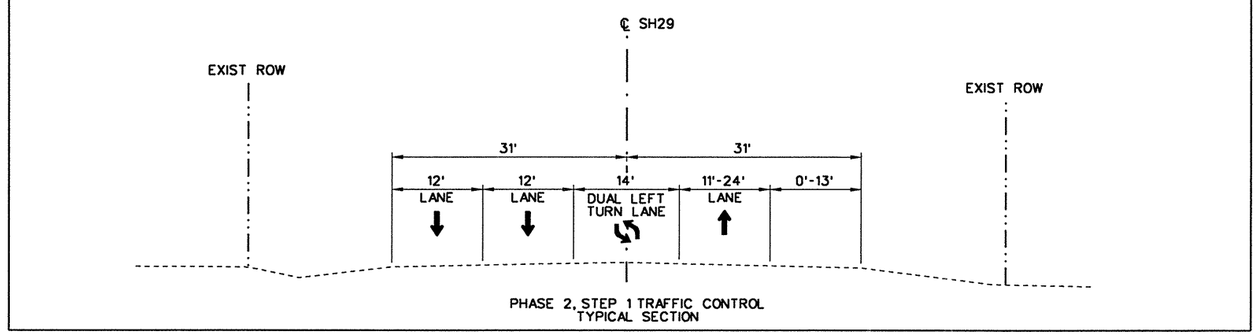

PHASE 2, STEP 1 TRAFFIC CONTROL
TYPICAL SECTION

N

50 25 0 50 100
SCALE FEET

LEGEND

- PROPOSED CONSTRUCTION
- TEMPORARY PAVEMENT
- (A) WRK. ZN. PAV. MRK. (W) (4") (SLD) (REMOV)
- (B) WRK. ZN. PAV. MRK. (W) (4") (BRK) (REMOV)
- (C) WRK. ZN. PAV. MRK. (Y) (4") (SLD) (REMOV)
- (D) WRK. ZN. PAV. MRK. (Y) (4") (BRK) (REMOV)
- (E) WRK. ZN. PAV. MRK. (W) (8") (SLD) (REMOV)
- (H) WRK. ZN. PAV. MRK. (W) (24") (SLD) (REMOV)
- (K) WRK. ZN. PAV. MRK. (W) (ARROW) (REMOV)
- (L) WRK. ZN. PAV. MRK. (W) (WORD) (REMOV)
- (M) WRK. ZN. PAV. MRK. (W) (4") (SLD) (NON-REMOV)
- (N) WRK. ZN. PAV. MRK. (W) (4") (BRK) (NON-REMOV)
- (O) WRK. ZN. PAV. MRK. (Y) (4") (SLD) (NON-REMOV)
- (P) WRK. ZN. PAV. MRK. (Y) (4") (BRK) (NON-REMOV)
- (Q) WRK. ZN. PAV. MRK. (W) (8") (SLD) (NON-REMOV)
- (S) WRK. ZN. PAV. MRK. (W) (8") (LNDP) (NON-REMOV)
- (T) WRK. ZN. PAV. MRK. (W) (24") (SLD) (NON-REMOV)
- (U) WRK. ZN. PAV. MRK. (Y) (24") (SLD) (NON-REMOV)
- (V) WRK. ZN. PAV. MRK. (W) (ARROW) (NON-REMOV)
- (W) WRK. ZN. PAV. MRK. (W) (WORD) (NON-REMOV)
- (X) RAIS. PAV. MRK. (CL. B) (REFL.) TY. II-A-A
- (Y) RAIS. PAV. MRK. (CL. B) (REFL.) TY. I-C
- (TY III) BARRICADE
- LOW PROFILE CONC. BARRIER (L.P.C.B.)

STATE OF TEXAS
JAMES J. ROOHNY
83383
LICENSED
PROFESSIONAL ENGINEER
4/22/2004

NO.	REVISION	BY	DATE

CP&Y Chiang, Patel & Yerby, Inc.

© 2004

Texas Department of Transportation

SH 29

TRAFFIC CONTROL PLANS

PHASE 2, STEP 1
BEGIN PROJECT TO STA. 135+00

		FED. ROAD DIV. NO.	STATE	FEDERAL AID PROJECT NO.				SHEET NO.
Designed:	KGM	6	TEXAS	CC 337-1-29				34
Checked:	JJR							
Drawn:	KGM	STATE DIST. NO.	COUNTY	CONTROL NO.	SECTION NO.	JOB NO.	HIGHWAY NO.	
Checked:	JJR	14	WILLIAMSON	0337	01	029	SH 29	

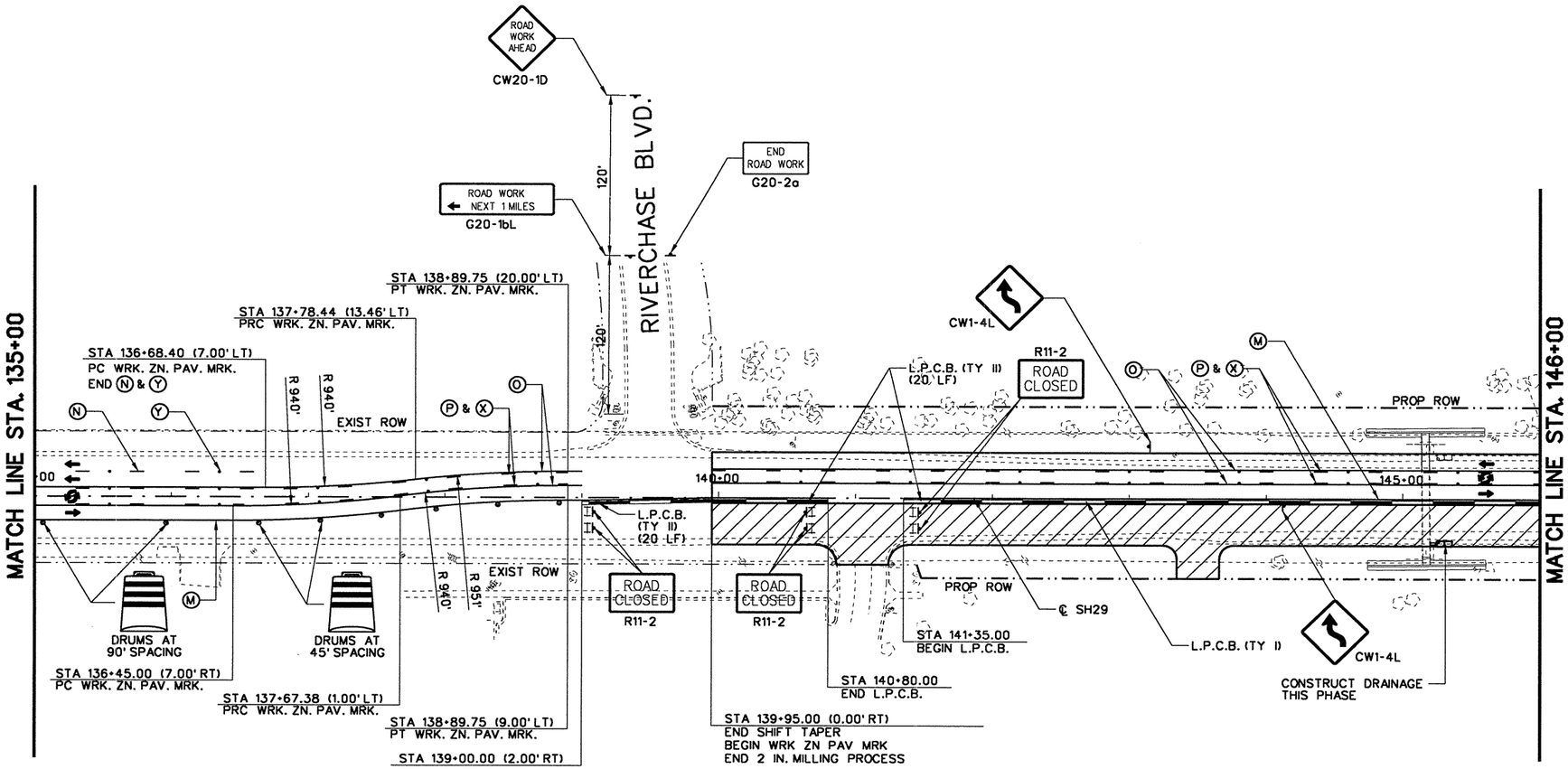

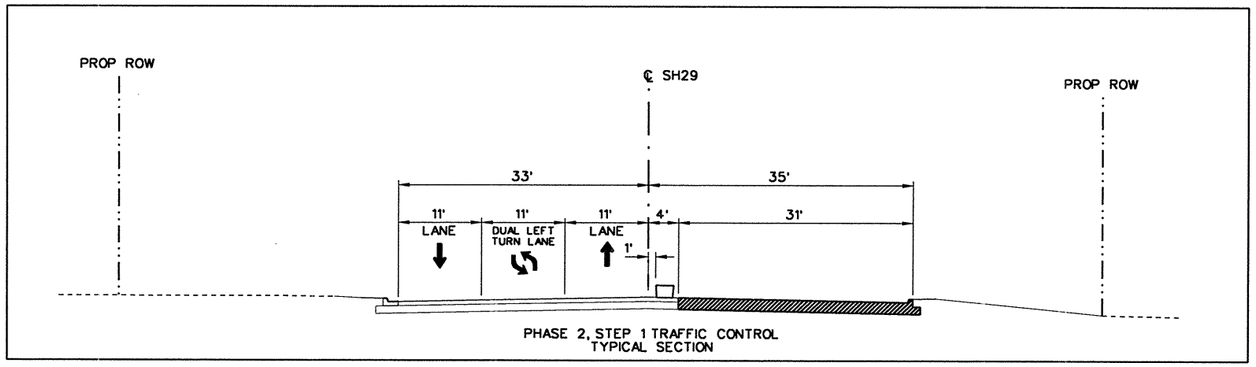

PHASE 2, STEP 1 TRAFFIC CONTROL
TYPICAL SECTION

N

50 25 0 50 100
SCALE FEET

LEGEND

- PROPOSED CONSTRUCTION
- TEMPORARY PAVEMENT
- (A) WRK. ZN. PAV. MRK. (W) (4") (SLD) (REMOV)
- (B) WRK. ZN. PAV. MRK. (W) (4") (BRK) (REMOV)
- (C) WRK. ZN. PAV. MRK. (Y) (4") (SLD) (REMOV)
- (D) WRK. ZN. PAV. MRK. (Y) (4") (BRK) (REMOV)
- (E) WRK. ZN. PAV. MRK. (W) (8") (SLD) (REMOV)
- (H) WRK. ZN. PAV. MRK. (W) (24") (SLD) (REMOV)
- (K) WRK. ZN. PAV. MRK. (W) (ARROW) (REMOV)
- (L) WRK. ZN. PAV. MRK. (W) (WORD) (REMOV)
- (M) WRK. ZN. PAV. MRK. (W) (4") (SLD) (NON-REMOV)
- (N) WRK. ZN. PAV. MRK. (W) (4") (BRK) (NON-REMOV)
- (O) WRK. ZN. PAV. MRK. (Y) (4") (SLD) (NON-REMOV)
- (P) WRK. ZN. PAV. MRK. (Y) (4") (BRK) (NON-REMOV)
- (Q) WRK. ZN. PAV. MRK. (W) (8") (SLD) (NON-REMOV)
- (S) WRK. ZN. PAV. MRK. (W) (8") (LNDP) (NON-REMOV)
- (T) WRK. ZN. PAV. MRK. (W) (24") (SLD) (NON-REMOV)
- (U) WRK. ZN. PAV. MRK. (Y) (24") (SLD) (NON-REMOV)
- (V) WRK. ZN. PAV. MRK. (W) (ARROW) (NON-REMOV)
- (W) WRK. ZN. PAV. MRK. (W) (WORD) (NON-REMOV)
- (X) RAIS. PAV. MRK. (CL. B) (REFL.) TY. II-A-A
- (Y) RAIS. PAV. MRK. (CL. B) (REFL.) TY. I-C
- (TY III) BARRICADE
- LOW PROFILE CONC. BARRIER (L.P.C.B.)

STATE OF TEXAS
JAMES J. ROCHIM
83383
LICENSED
PROFESSIONAL ENGINEER
4/22/2004

NOTES:

1. ACCESS TO PRIVATE PROPERTY SHALL BE MAINTAINED AT ALL TIMES.

NO.	REVISION	BY	DATE

CP&Y Chiang, Patel & Yerby, Inc.

© 2004

Texas Department of Transportation

SH 29

TRAFFIC CONTROL PLANS

PHASE 2, STEP 1
STA. 135+00 TO STA. 146+00

		FED. ROAD DIV. NO.	STATE	FEDERAL AID PROJECT NO.				SHEET NO.
Designed:	KGM	6	TEXAS	CC 337-1-29				35
Checked:	JJR	STATE DIST. NO.	COUNTY	CONTROL NO.	SECTION NO.	JOB NO.	HIGHWAY NO.	
Drawn:	KGM	14	WILLIAMSON	0337	01	029	SH 29	
Checked:	JJR							

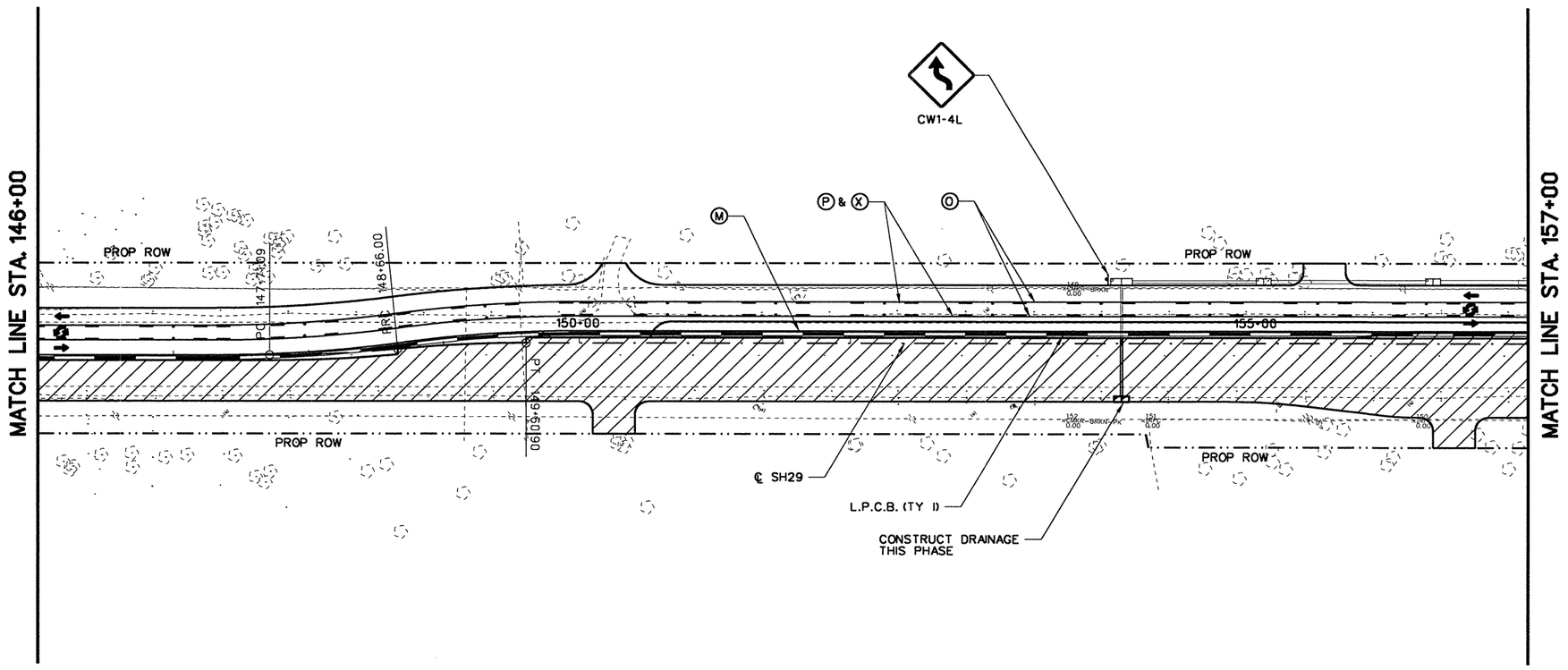

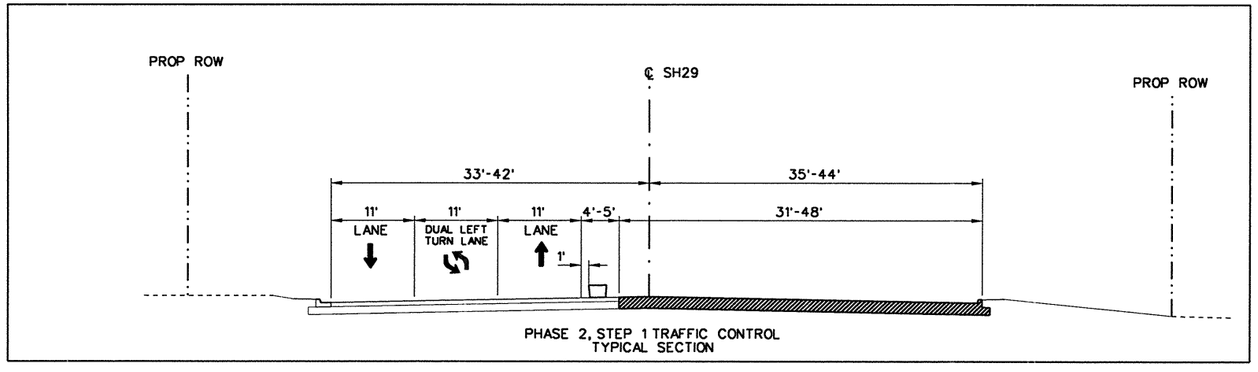

PHASE 2, STEP 1 TRAFFIC CONTROL TYPICAL SECTION

NOTES:

1. ACCESS TO PRIVATE PROPERTY SHALL BE MAINTAINED AT ALL TIMES.

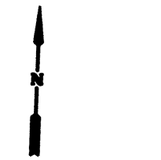

50 25 0 50 100

SCALE FEET

LEGEND

- PROPOSED CONSTRUCTION
- TEMPORARY PAVEMENT
- (A) WRK. ZN. PAV. MRK. (W) (4") (SLD) (REMOV)
- (B) WRK. ZN. PAV. MRK. (W) (4") (BRK) (REMOV)
- (C) WRK. ZN. PAV. MRK. (Y) (4") (SLD) (REMOV)
- (D) WRK. ZN. PAV. MRK. (Y) (4") (BRK) (REMOV)
- (E) WRK. ZN. PAV. MRK. (W) (8") (SLD) (REMOV)
- (H) WRK. ZN. PAV. MRK. (W) (24") (SLD) (REMOV)
- (K) WRK. ZN. PAV. MRK. (W) (ARROW) (REMOV)
- (L) WRK. ZN. PAV. MRK. (W) (WORD) (REMOV)
- (M) WRK. ZN. PAV. MRK. (W) (4") (SLD) (NON-REMOV)
- (N) WRK. ZN. PAV. MRK. (W) (4") (BRK) (NON-REMOV)
- (O) WRK. ZN. PAV. MRK. (Y) (4") (SLD) (NON-REMOV)
- (P) WRK. ZN. PAV. MRK. (Y) (4") (BRK) (NON-REMOV)
- (Q) WRK. ZN. PAV. MRK. (W) (8") (SLD) (NON-REMOV)
- (S) WRK. ZN. PAV. MRK. (W) (8") (LNDP) (NON-REMOV)
- (T) WRK. ZN. PAV. MRK. (W) (24") (SLD) (NON-REMOV)
- (U) WRK. ZN. PAV. MRK. (Y) (24") (SLD) (NON-REMOV)
- (V) WRK. ZN. PAV. MRK. (W) (ARROW) (NON-REMOV)
- (W) WRK. ZN. PAV. MRK. (W) (WORD) (NON-REMOV)
- (X) RAIS. PAV. MRK. (CL. B) (REFL.) TY. II-A-A
- (Y) RAIS. PAV. MRK. (CL. B) (REFL.) TY. I-C
- H (TY III) BARRICADE
- LOW PROFILE CONC. BARRIER (L.P.C.B.)

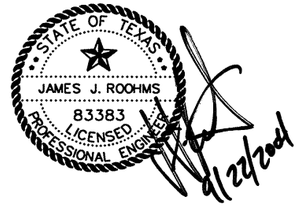

NO.	REVISION	BY	DATE

CP&Y Chiang, Patel & Yerby, Inc.

© 2004

Texas Department of Transportation

SH 29

TRAFFIC CONTROL PLANS

PHASE 2, STEP 1

STA. 146+00 TO STA. 157+00

		FED. ROAD DIV. NO.	STATE	FEDERAL AID PROJECT NO.			SHEET NO.
Designed:	KGM	6	TEXAS	CC 337-1-29			36
Checked:	JJR	STATE DIST. NO.	COUNTY	CONTROL NO.	SECTION NO.	JOB NO.	HIGHWAY NO.
Drawn:	KGM	14	WILLIAMSON	0337	01	029	SH 29
Checked:	JJR						

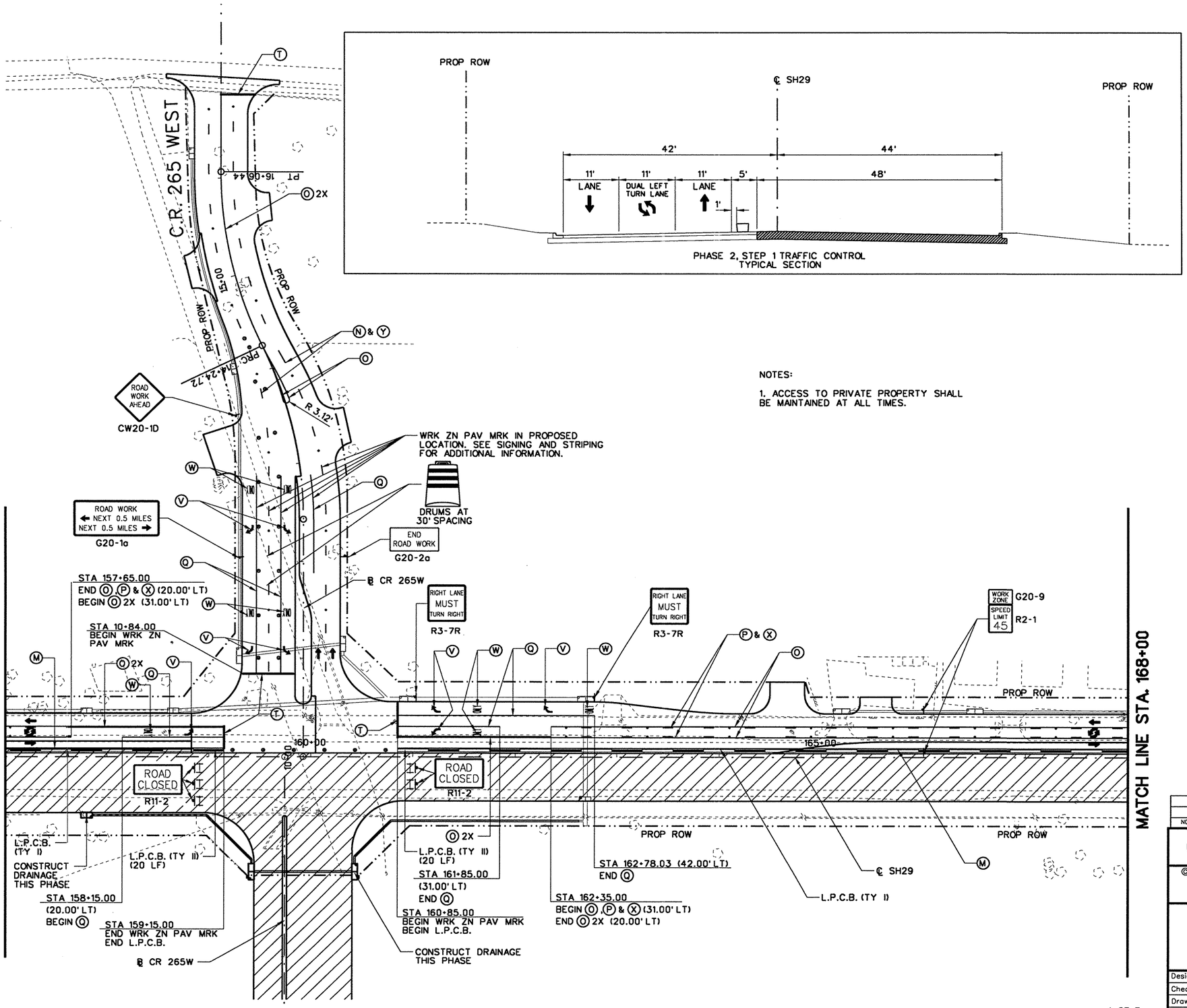

PHASE 2, STEP 1 TRAFFIC CONTROL
TYPICAL SECTION

NOTES:

1. ACCESS TO PRIVATE PROPERTY SHALL BE MAINTAINED AT ALL TIMES.

N

50 25 0 50 100
SCALE FEET

LEGEND

- PROPOSED CONSTRUCTION
- TEMPORARY PAVEMENT
- (A) WRK. ZN. PAV. MRK. (W) (4") (SLD) (REMOV)
- (B) WRK. ZN. PAV. MRK. (W) (4") (BRK) (REMOV)
- (C) WRK. ZN. PAV. MRK. (Y) (4") (SLD) (REMOV)
- (D) WRK. ZN. PAV. MRK. (Y) (4") (BRK) (REMOV)
- (E) WRK. ZN. PAV. MRK. (W) (8") (SLD) (REMOV)
- (H) WRK. ZN. PAV. MRK. (W) (24") (SLD) (REMOV)
- (K) WRK. ZN. PAV. MRK. (W) (ARROW) (REMOV)
- (L) WRK. ZN. PAV. MRK. (W) (WORD) (REMOV)
- (M) WRK. ZN. PAV. MRK. (W) (4") (SLD) (NON-REMOV)
- (N) WRK. ZN. PAV. MRK. (W) (4") (BRK) (NON-REMOV)
- (O) WRK. ZN. PAV. MRK. (Y) (4") (SLD) (NON-REMOV)
- (P) WRK. ZN. PAV. MRK. (Y) (4") (BRK) (NON-REMOV)
- (Q) WRK. ZN. PAV. MRK. (W) (8") (SLD) (NON-REMOV)
- (S) WRK. ZN. PAV. MRK. (W) (8") (LNDP) (NON-REMOV)
- (T) WRK. ZN. PAV. MRK. (W) (24") (SLD) (NON-REMOV)
- (U) WRK. ZN. PAV. MRK. (Y) (24") (SLD) (NON-REMOV)
- (V) WRK. ZN. PAV. MRK. (W) (ARROW) (NON-REMOV)
- (W) WRK. ZN. PAV. MRK. (W) (WORD) (NON-REMOV)
- (X) RAIS. PAV. MRK. (CL. B) (REFL.) TY. II-A-A
- (Y) RAIS. PAV. MRK. (CL. B) (REFL.) TY. I-C
- (TY III) BARRICADE
- LOW PROFILE CONC. BARRIER (L.P.C.B.)

STATE OF TEXAS
JAMES J. ROOHMS
83383
LICENSED
PROFESSIONAL ENGINEER
9/22/2004

NO.	REVISION	BY	DATE

CP&Y Chiang, Patel & Yerby, Inc.

© 2004

Texas Department of Transportation

SH 29

TRAFFIC CONTROL PLANS

PHASE 2, STEP 1
STA. 157+00 TO STA. 168+00

		FED. ROAD DIV. NO.	STATE	FEDERAL AID PROJECT NO.				SHEET NO.
Designed:	KGM	6	TEXAS	CC 337-1-29				27
Checked:	JJR	STATE DIST. NO.	COUNTY	CONTROL NO.	SECTION NO.	JOB NO.		HIGHWAY NO.
Drawn:	KGM	14	WILLIAMSON	0337	01	029		SH 29
Checked:	JJR							

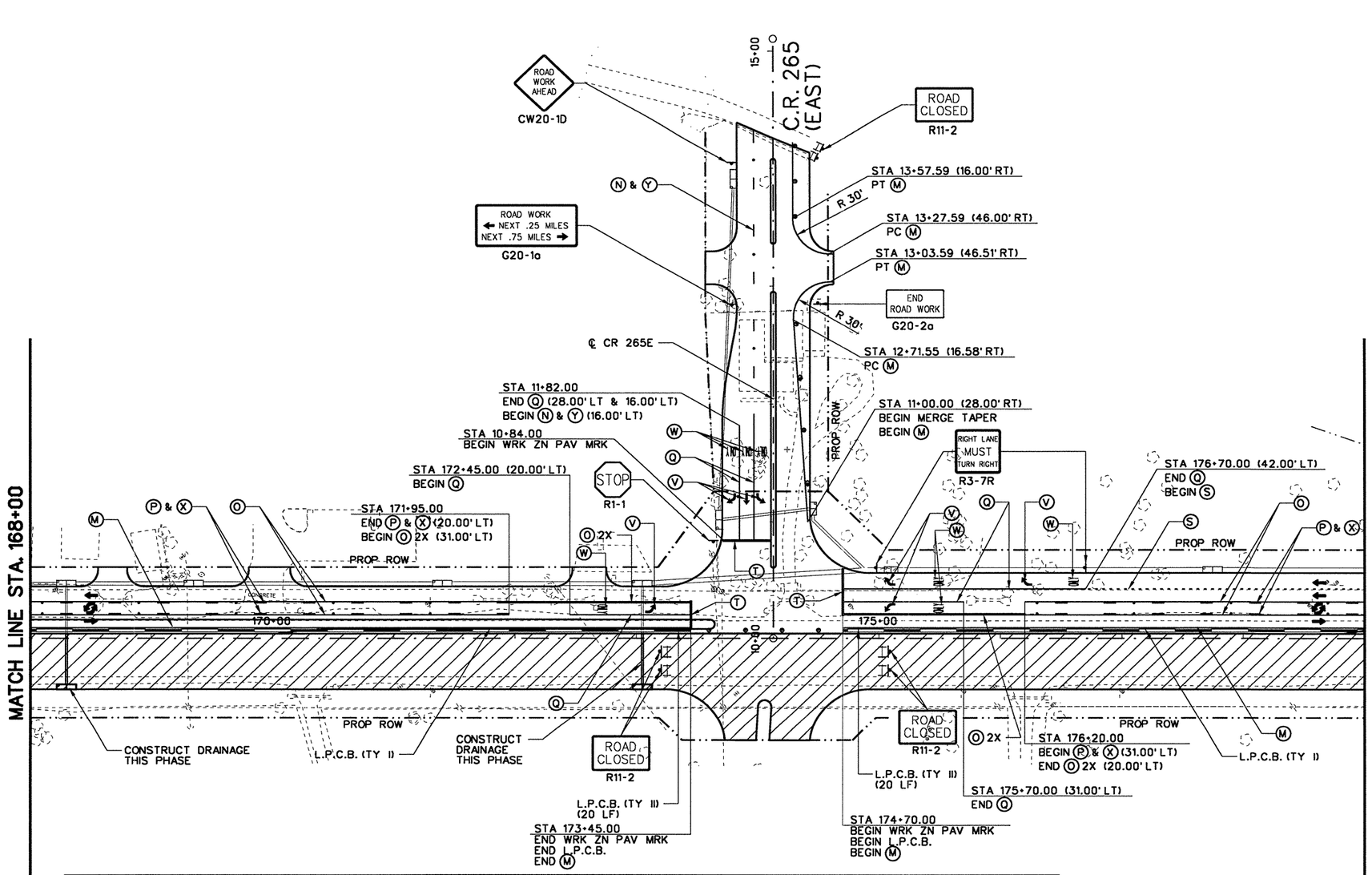

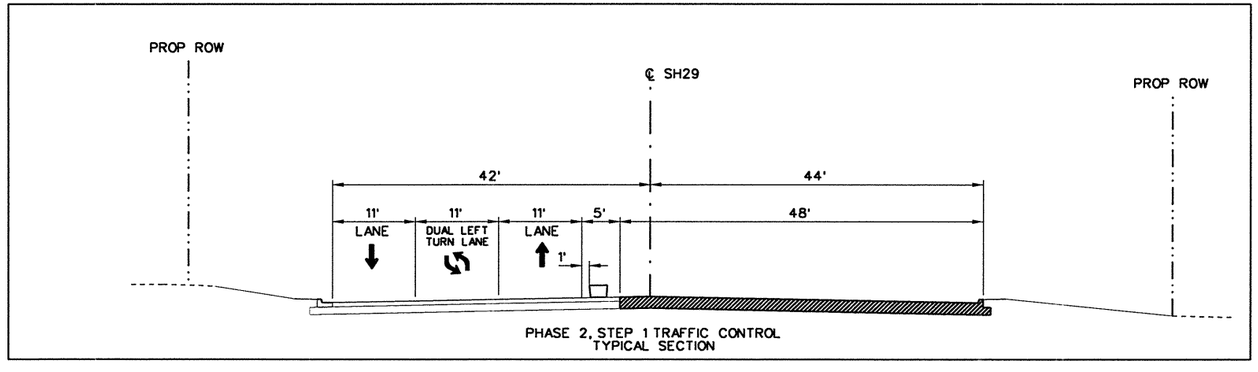

PHASE 2, STEP 1 TRAFFIC CONTROL
TYPICAL SECTION

NOTES:

1. ACCESS TO PRIVATE PROPERTY SHALL BE MAINTAINED AT ALL TIMES.

50 25 0 50 100
SCALE FEET

LEGEND

- PROPOSED CONSTRUCTION
- TEMPORARY PAVEMENT
- (A) WRK. ZN. PAV. MRK. (W) (4") (SLD) (REMOV)
- (B) WRK. ZN. PAV. MRK. (W) (4") (BRK) (REMOV)
- (C) WRK. ZN. PAV. MRK. (Y) (4") (SLD) (REMOV)
- (D) WRK. ZN. PAV. MRK. (Y) (4") (BRK) (REMOV)
- (E) WRK. ZN. PAV. MRK. (W) (8") (SLD) (REMOV)
- (H) WRK. ZN. PAV. MRK. (W) (24") (SLD) (REMOV)
- (K) WRK. ZN. PAV. MRK. (W) (ARROW) (REMOV)
- (L) WRK. ZN. PAV. MRK. (W) (WORD) (REMOV)
- (M) WRK. ZN. PAV. MRK. (W) (4") (SLD) (NON-REMOV)
- (N) WRK. ZN. PAV. MRK. (W) (4") (BRK) (NON-REMOV)
- (O) WRK. ZN. PAV. MRK. (Y) (4") (SLD) (NON-REMOV)
- (P) WRK. ZN. PAV. MRK. (Y) (4") (BRK) (NON-REMOV)
- (Q) WRK. ZN. PAV. MRK. (W) (8") (SLD) (NON-REMOV)
- (S) WRK. ZN. PAV. MRK. (W) (8") (LNDP) (NON-REMOV)
- (T) WRK. ZN. PAV. MRK. (W) (24") (SLD) (NON-REMOV)
- (U) WRK. ZN. PAV. MRK. (Y) (24") (SLD) (NON-REMOV)
- (V) WRK. ZN. PAV. MRK. (W) (ARROW) (NON-REMOV)
- (W) WRK. ZN. PAV. MRK. (W) (WORD) (NON-REMOV)
- (X) RAIS. PAV. MRK. (CL. B) (REFL.) TY. II-A-A
- (Y) RAIS. PAV. MRK. (CL. B) (REFL.) TY. I-C
- (TY III) BARRICADE
- LOW PROFILE CONC. BARRIER (L.P.C.B.)

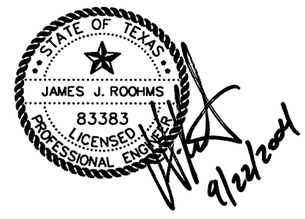

NO.	REVISION	BY	DATE

CP&Y Chiang, Patel & Yerby, Inc.

© 2004

Texas Department of Transportation

SH 29

TRAFFIC CONTROL PLANS

PHASE 2, STEP 1

STA. 168+00 TO STA. 179+00

Designed:	KGM	FED. ROAD DIV. NO.	STATE	FEDERAL AID PROJECT NO.				SHEET NO.
Checked:	JJR	6	TEXAS	CC 337-1-29				28
Drawn:	KGM	STATE DIST. NO.	COUNTY	CONTROL NO.	SECTION NO.	JOB NO.	HIGHWAY NO.	
Checked:	JJR	14	WILLIAMSON	0337	01	029	SH 29	

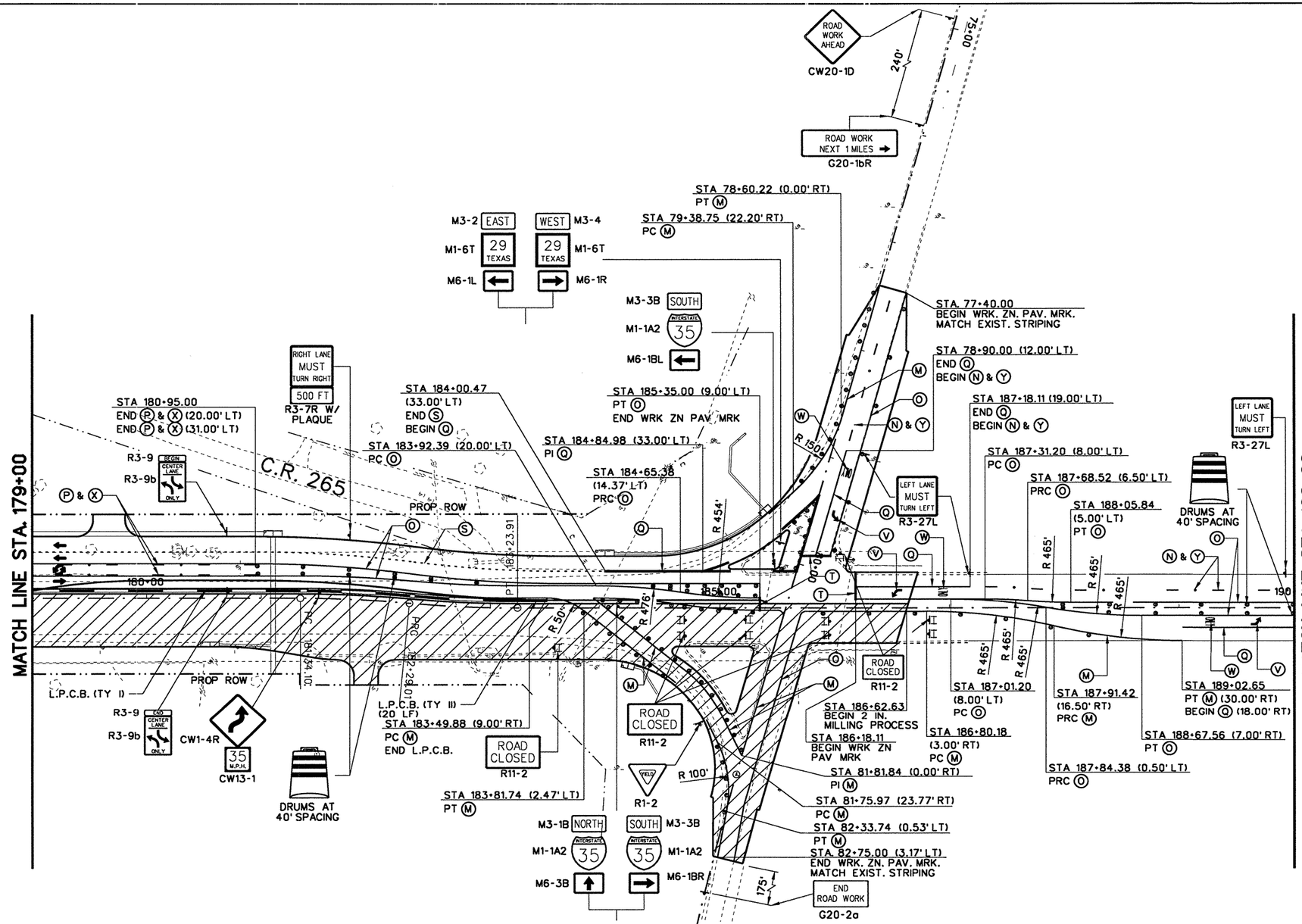

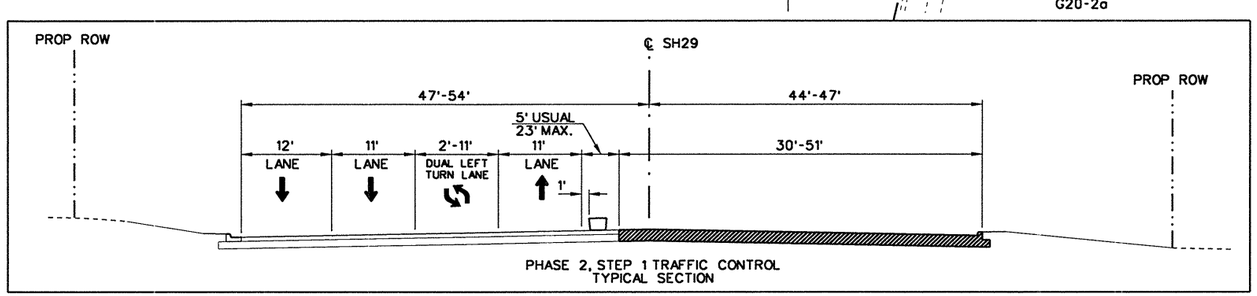

PHASE 2, STEP 1 TRAFFIC CONTROL TYPICAL SECTION



LEGEND

- PROPOSED CONSTRUCTION
- TEMPORARY PAVEMENT
- (A) WRK. ZN. PAV. MRK. (W) (4") (SLD) (REMOV)
- (B) WRK. ZN. PAV. MRK. (W) (4") (BRK) (REMOV)
- (C) WRK. ZN. PAV. MRK. (Y) (4") (SLD) (REMOV)
- (D) WRK. ZN. PAV. MRK. (Y) (4") (BRK) (REMOV)
- (E) WRK. ZN. PAV. MRK. (W) (8") (SLD) (REMOV)
- (H) WRK. ZN. PAV. MRK. (W) (24") (SLD) (REMOV)
- (K) WRK. ZN. PAV. MRK. (W) (ARROW) (REMOV)
- (L) WRK. ZN. PAV. MRK. (W) (WORD) (REMOV)
- (M) WRK. ZN. PAV. MRK. (W) (4") (SLD) (NON-REMOV)
- (N) WRK. ZN. PAV. MRK. (W) (4") (BRK) (NON-REMOV)
- (O) WRK. ZN. PAV. MRK. (Y) (4") (SLD) (NON-REMOV)
- (P) WRK. ZN. PAV. MRK. (Y) (4") (BRK) (NON-REMOV)
- (Q) WRK. ZN. PAV. MRK. (W) (8") (SLD) (NON-REMOV)
- (S) WRK. ZN. PAV. MRK. (W) (8") (LNDP) (NON-REMOV)
- (T) WRK. ZN. PAV. MRK. (W) (24") (SLD) (NON-REMOV)
- (U) WRK. ZN. PAV. MRK. (Y) (24") (SLD) (NON-REMOV)
- (V) WRK. ZN. PAV. MRK. (W) (ARROW) (NON-REMOV)
- (W) WRK. ZN. PAV. MRK. (W) (WORD) (NON-REMOV)
- (X) RAIS. PAV. MRK. (CL. B) (REFL.) TY. II-A-A
- (Y) RAIS. PAV. MRK. (CL. B) (REFL.) TY. I-C
- (TY III) BARRICADE
- LOW PROFILE CONC. BARRIER (L.P.C.B.)

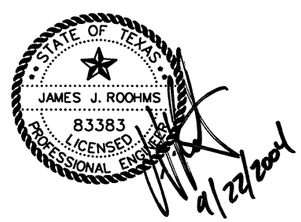

NOTES:

1. ACCESS TO PRIVATE PROPERTY SHALL BE MAINTAINED AT ALL TIMES.

2. CONSTRUCTION OF IH 35 SOUTHBOUND FRONTAGE RD AND SH 29 INTERSECTION SHALL BE COMPLETED DURING NIGHTTIME HOURS ONLY. TRAFFIC SHALL BE RESTORED EACH MORNING TO THE CONFIGURATION SHOWN IN THE PLANS.

NO.	REVISION	BY	DATE

Chiang, Patel & Yerby, Inc.

© 2004

Texas Department of Transportation

SH 29

TRAFFIC CONTROL PLANS

PHASE 2, STEP 1

STA. 179+00 TO STA. 190+00

		FED. ROAD DIV. NO.	STATE	FEDERAL AID PROJECT NO.				SHEET NO.
Designed:	KGM	6	TEXAS	CC 337-1-29				39
Checked:	JJR	STATE DIST. No.	COUNTY	CONTROL NO.	SECTION NO.	JOB NO.	HIGHWAY NO.	
Drawn:	KGM	14	WILLIAMSON	0337	01	029	SH 29	
Checked:	JJR							

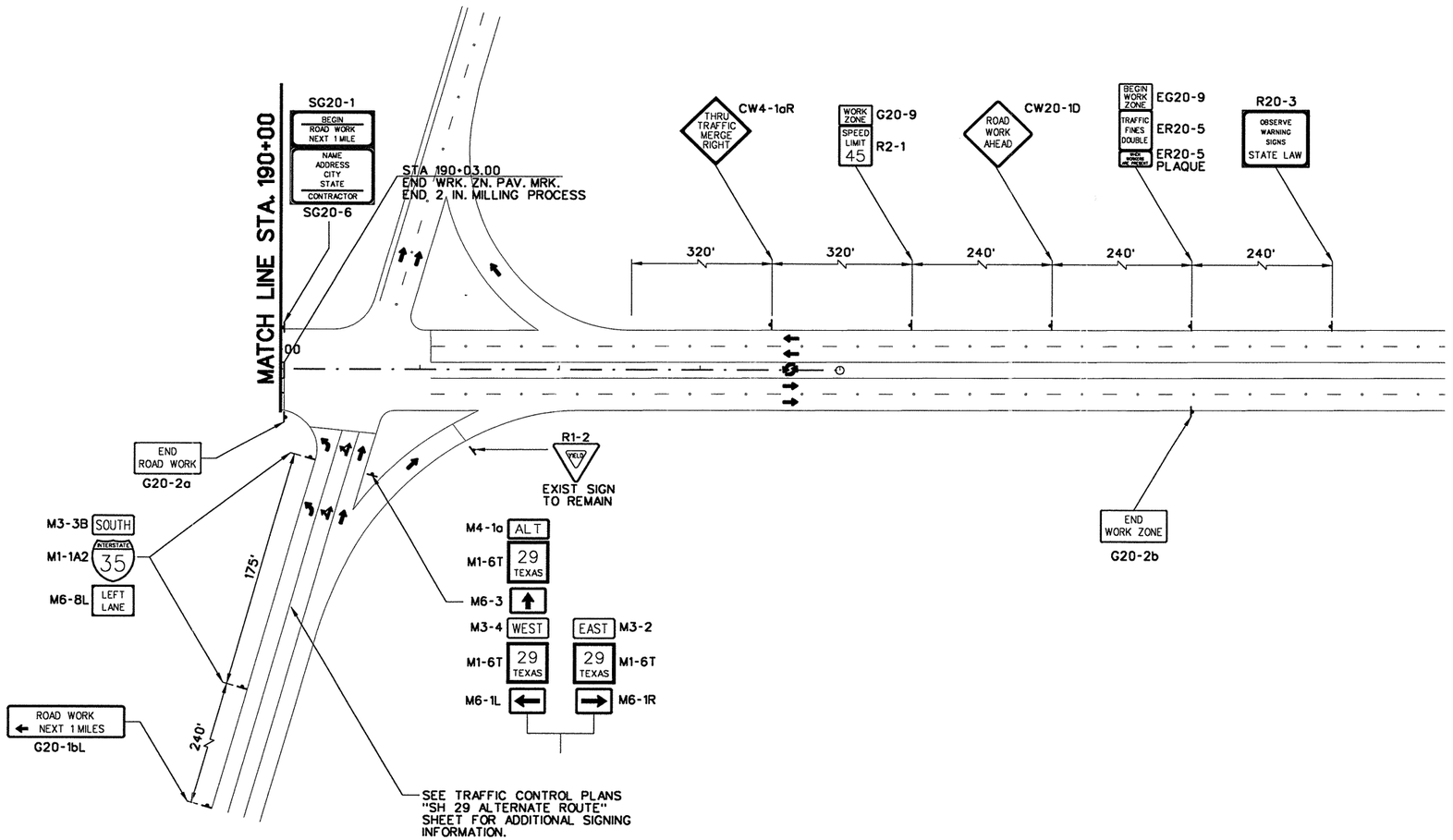

N

50 25 0 50 100
SCALE FEET

LEGEND

- PROPOSED CONSTRUCTION
- TEMPORARY PAVEMENT
- (A) WRK. ZN. PAV. MRK. (W) (4") (SLD) (REMOV)
- (B) WRK. ZN. PAV. MRK. (W) (4") (BRK) (REMOV)
- (C) WRK. ZN. PAV. MRK. (Y) (4") (SLD) (REMOV)
- (D) WRK. ZN. PAV. MRK. (Y) (4") (BRK) (REMOV)
- (E) WRK. ZN. PAV. MRK. (W) (8") (SLD) (REMOV)
- (H) WRK. ZN. PAV. MRK. (W) (24") (SLD) (REMOV)
- (K) WRK. ZN. PAV. MRK. (W) (ARROW) (REMOV)
- (L) WRK. ZN. PAV. MRK. (W) (WORD) (REMOV)
- (M) WRK. ZN. PAV. MRK. (W) (4") (SLD) (NON-REMOV)
- (N) WRK. ZN. PAV. MRK. (W) (4") (BRK) (NON-REMOV)
- (O) WRK. ZN. PAV. MRK. (Y) (4") (SLD) (NON-REMOV)
- (P) WRK. ZN. PAV. MRK. (Y) (4") (BRK) (NON-REMOV)
- (Q) WRK. ZN. PAV. MRK. (W) (8") (SLD) (NON-REMOV)
- (S) WRK. ZN. PAV. MRK. (W) (8") (LNDP) (NON-REMOV)
- (T) WRK. ZN. PAV. MRK. (W) (24") (SLD) (NON-REMOV)
- (U) WRK. ZN. PAV. MRK. (Y) (24") (SLD) (NON-REMOV)
- (V) WRK. ZN. PAV. MRK. (W) (ARROW) (NON-REMOV)
- (W) WRK. ZN. PAV. MRK. (W) (WORD) (NON-REMOV)
- (X) RAIS. PAV. MRK. (CL. B) (REFL.) TY. II-A-A
- (Y) RAIS. PAV. MRK. (CL. B) (REFL.) TY. I-C
- (TY III) BARRICADE
- LOW PROFILE CONC. BARRIER (L.P.C.B.)

STATE OF TEXAS
JAMES J. ROOHMS
83383
LICENSED
PROFESSIONAL ENGINEER
9/22/2004

NO.	REVISION	BY	DATE

CP&Y Chiang, Patel & Yerby, Inc.

© 2004

Texas Department of Transportation

SH 29

TRAFFIC CONTROL PLANS

PHASE 2, STEP 1
STA. 190+00 TO END PROJECT

		FED. ROAD DIV. NO.	STATE	FEDERAL AID PROJECT NO.			SHEET NO.
Designed:	KGM	6	TEXAS	CC 337-1-29			40
Checked:	JJR						
Drawn:	KGM	STATE DIST. NO.	COUNTY	CONTROL NO.	SECTION NO.	JOB NO.	HIGHWAY NO.
Checked:	JJR	14	WILLIAMSON	0337	01	029	SH 29

...\wa3\west\common\533way2107.100 09/21/2004 04:28:22 PM

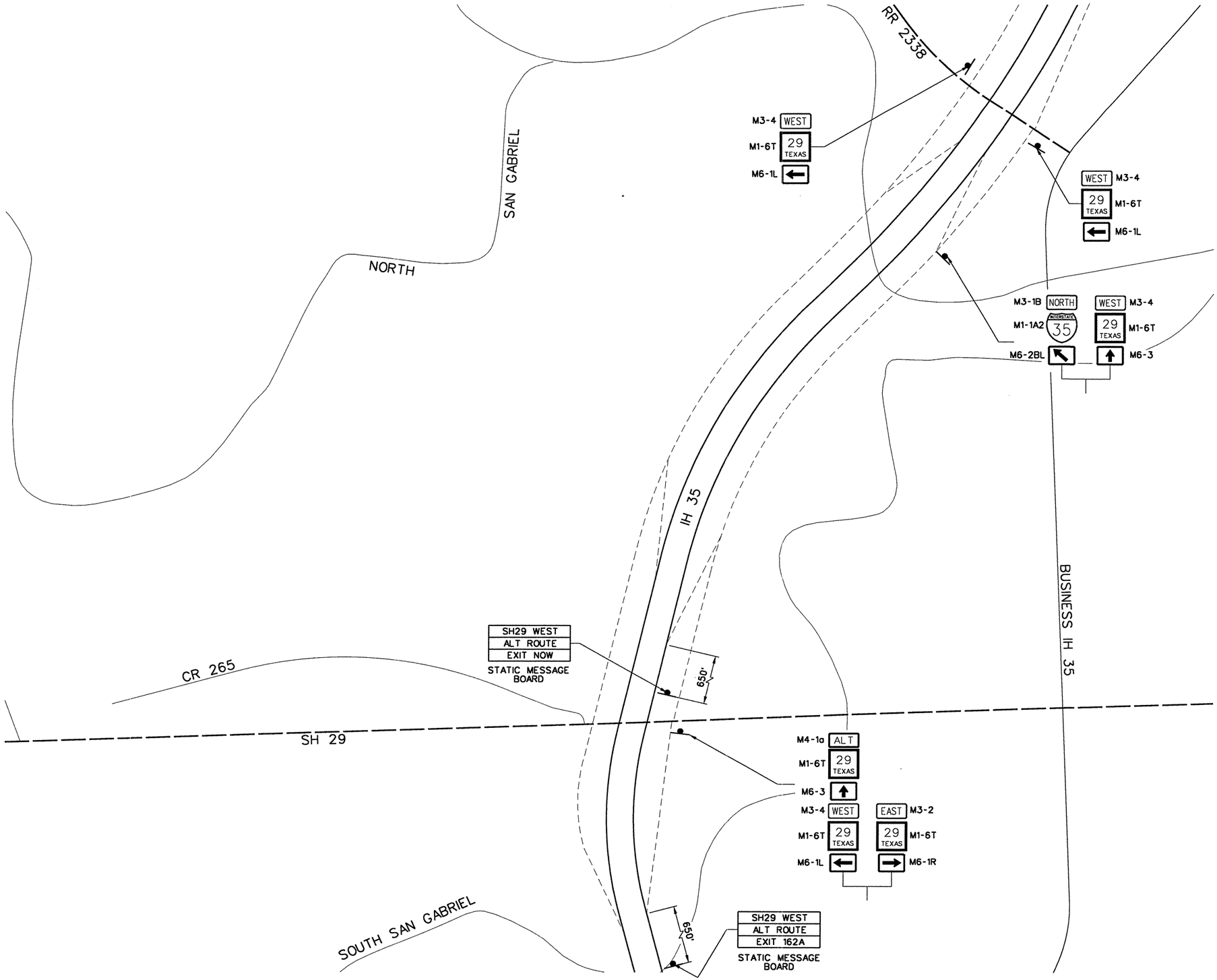

NOTES:

1. ALTERNATE ROUTE SHALL BE IN PLACE THROUGHOUT PHASE 1, STEP 2 THRU PHASE 2, STEP 1.

STATE OF TEXAS
JAMES J. ROOHMS
83383
LICENSED
PROFESSIONAL ENGINEER
9/22/2004

NO.	REVISION	BY	DATE

CP&Y Chiang, Patel & Yerby, Inc.

© 2004

Texas Department of Transportation

SH 29

TRAFFIC CONTROL PLANS
SH 29 ALTERNATE ROUTE

		FED. ROAD DIV. NO.	STATE	FEDERAL AID PROJECT NO.				SHEET NO.
Designed:	SML	6	TEXAS	CC 337-1-29				41
Checked:	JJR	STATE DIST. NO.	COUNTY	CONTROL NO.	SECTION NO.	JOB NO.	HIGHWAY NO.	
Drawn:	SML	14	WILLIAMSON	0337	01	029	SH 29	
Checked:	JJR							

...\wa3\WEST\common\533Wayg02.100 09/22/2004 08:25:50 AM

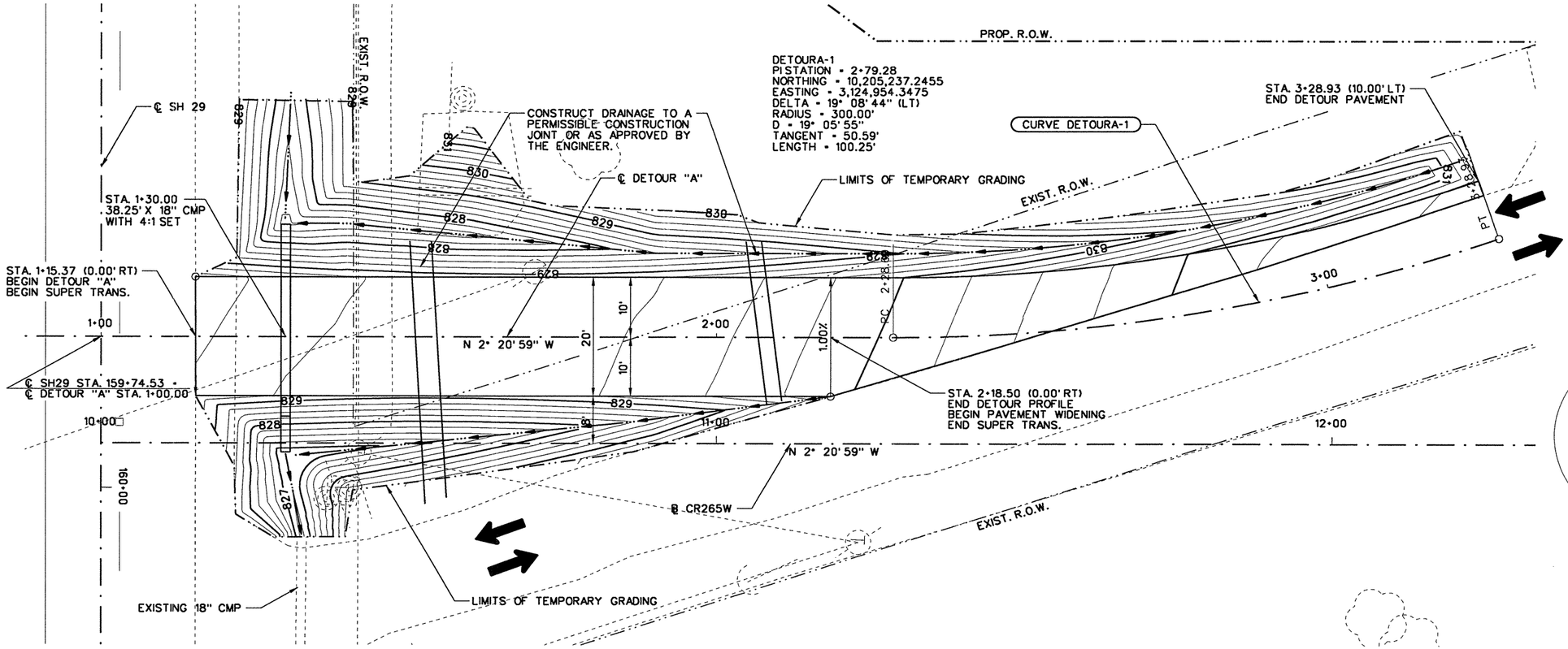

DETOUR "A"
PAVEMENT STRUCTURE
N.T.S.

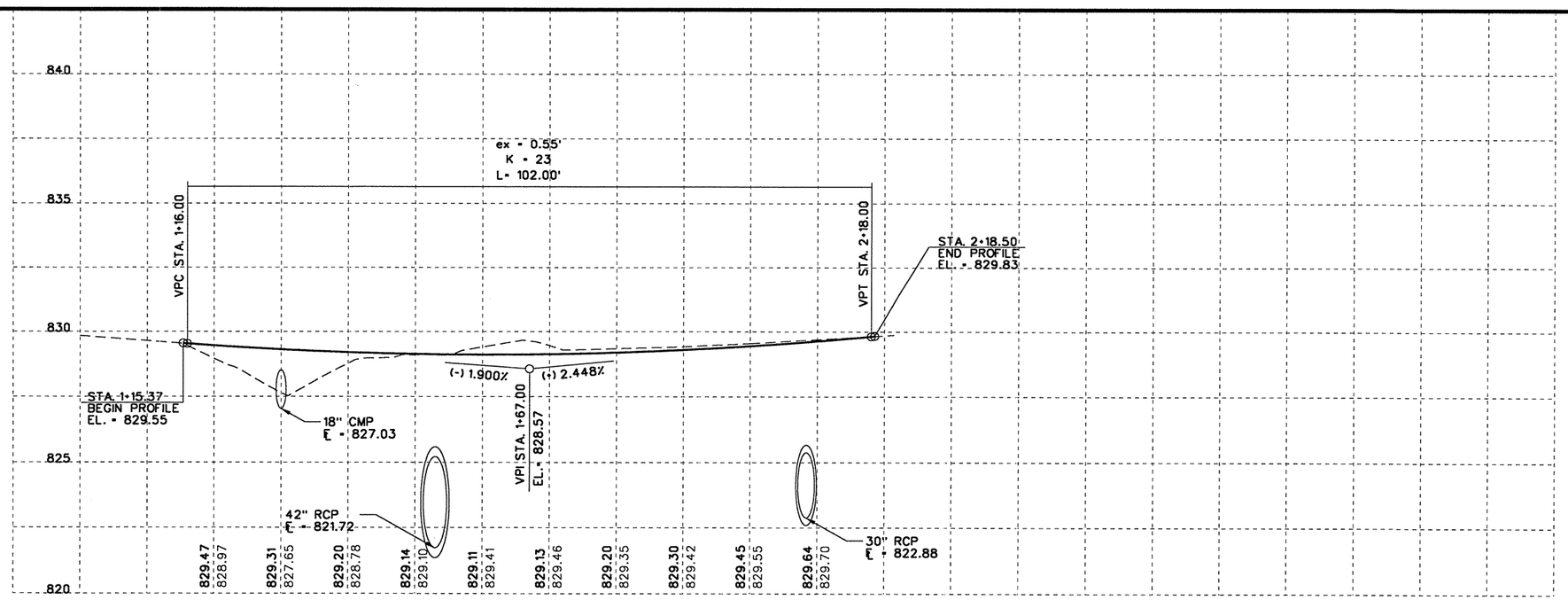

STATE OF TEXAS
JAMES J. ROOHMS
83383
LICENSED
PROFESSIONAL ENGINEER
9/27/04

NO.	REVISION	BY	DATE

CP&Y Chiang, Patel & Yerby, Inc.

© 2004

Texas Department of Transportation

SH 29

TRAFFIC CONTROL PLANS
DETOUR "A"

		FED. ROAD DIV. NO.	STATE	FEDERAL AID PROJECT NO.			SHEET NO.
Designed:	SML	6	TEXAS	CC 337-1-29			42
Checked:	JJR	STATE DIST. NO.	COUNTY	CONTROL NO.	SECTION NO.	JOB NO.	HIGHWAY NO.
Drawn:	SML	14	WILLIAMSON	0337	01	029	SH 29
Checked:	JJR						

1 OF 1

...\wa3\west\common\533wyd01.020 09/21/2004 04:57:35 PM

Barricade and Construction (BC) Standard Sheets General Notes: ⚠

1. The Barricade and Construction Standard Sheets (BC sheets) are intended to show typical examples for placement of traffic control devices, construction pavement markings, and typical construction signs. The information contained in these sheets meet or exceed the requirements shown in the "Texas Manual on Uniform Traffic Control Devices" (TMUTCD).
2. The development and design of the Traffic Control Plan (TCP) is the responsibility of the Engineer.
3. The Contractor may propose changes to the TCP that are signed and sealed by a licensed professional engineer for approval. The Engineer may develop, sign and seal Contractor proposed changes.
4. The Contractor is responsible for installing and maintaining the traffic control devices as shown in the plans. The Contractor may not move or change the approximate location of any device without the approval of the Engineer.
5. Geometric design of lane shifts and detours should, when possible, meet the applicable design criteria contained in manuals such as the American Association of State Highway and Transportation Officials (AASHTO) "Policy on the Geometric Design of Highways and Streets" or the TxDOT "Roadway Design Manual".
6. When projects abut, the Engineer(s) may omit the END ROAD WORK, TRAFFIC FINES DOUBLE, and other advance warning signs if the signing would be redundant and the work areas appear continuous to the motorists. If the adjacent project is completed first, the Contractor will erect the necessary warning signs as shown on these sheets, the TCP sheets or as directed by the Engineer. The BEGIN ROAD WORK NEXT X MILES sign will be revised to show appropriate work zone distance.
7. The Engineer may require duplicate construction warning signs on the median side of divided highways where median width will permit and traffic volumes justify the signing.
8. All signs shall be constructed in accordance with the details found in the "Standard Highway Sign Designs for Texas," latest edition. Sign details not shown in this manual shall be shown in the plans or the Engineer shall provide a detail to the Contractor before the sign is manufactured.
9. The traffic control devices shown in the illustrations of the BC sheets are examples. As necessary, the Engineer will determine the most appropriate traffic control devices to be used.
10. As shown on BC(2), the OBSERVE WARNING SIGNS STATE LAW, BEGIN ROAD WORK NEXT X MILES, CONTRACTOR and END ROAD WORK signs shall be erected at or near the CSJ limits and the WORK ZONE TRAFFIC FINES DOUBLE sign with plaque shall be erected in advance of the CSJ limits.
11. Except for devices required by Note 10, traffic control devices should be in place only while work is actually in progress or a definite need exists.
12. The Engineer has the final decision on the location of all traffic control devices.

Only pre-qualified products shall be used. A copy of the "Compliant Work Zone Traffic Control Devices List" (CWZTCD) describes pre-qualified products and their sources and may be obtained by contacting:

Standards Engineer
Traffic Operations Division - TE
Texas Department of Transportation
125 East 11th Street
Austin, Texas 78701-2483
Phone (512) 416-3120
Fax (512) 416-3299

Instructions to locate the "CWZTCD" on TxDOT website are:

Start at website - www.dot.state.tx.us
Click on "About TxDOT",
Click on "Functional Organizational Chart",
Click on Traffic Operations Box,
Click on "Compliant Work Zone Traffic Control Devices",
again click on "Compliant Work Zone Traffic Control Devices".
This site is printable.

4/03 Revision

⚠ Revised General Notes

STANDARD PLANS
TEXAS DEPARTMENT OF TRANSPORTATION
Traffic Operations Division

BARRICADE AND CONSTRUCTION GENERAL NOTES AND REQUIREMENTS

1 of 12 BC(1)-03

©TxDOT 11-4-02	DN: - BAS	CK: - GRB	DW: - FDN	CK: - CAL

REVISIONS	STATE DISTRICT	FEDERAL REGION	PROJECT NUMBER	SHEET
4-03	AUS	6	CC 337-1-29	43

COUNTY	CONTROL	SECTION	JOB	HIGHWAY
WILLIAMSON	0337	01	029	SH 29

CLOSED ROADWAY

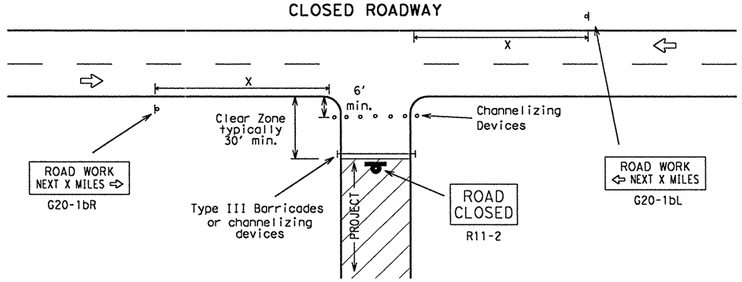

Barricades or channelizing devices shall be erected completely across roadway. Drums, vertical panels or cones shall be used in place of Type III Barricades when shown in plans or as specified by the Engineer.

T-INTERSECTION

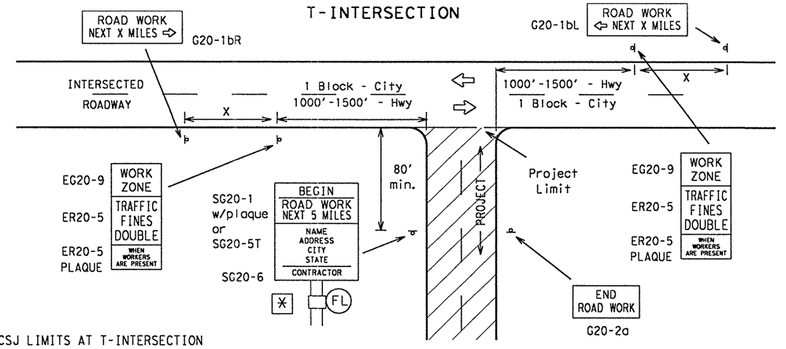

CSJ LIMITS AT T-INTERSECTION

1. A ROAD WORK NEXT X MILES (G20-1bR(L)) sign should be erected on the intersected highway as shown above.
2. The Engineer will determine the types and location of any additional traffic control devices, such as a flagger and accompanying signs, or other signs, that should be used when work is being performed at or near an intersection.
3. The Engineer/Inspector shall ensure that construction work zone signs are installed with adequate spacing between the signs so the legibility of existing permanent and other work zone signs is not obstructed.

TYPICAL CONSTRUCTION WARNING SIGN SIZE AND SPACING [1,5,6]

Posted Speed	Sign Spacing "X" △	Long-term Or Intermediate-term Stationary Approach Warning Signs CW20 and CW21 Series		Short-term Stationary Or Short Duration Approach Warning Signs CW21 Series		Other Warning Signs
MPH	Feet (Apprx.)	Standard inches	Minimum [4] inches	Standard inches [7]	Minimum [4] inches [7]	Standard inches [7]
30	120	48 x 48	36 x 36	30 x 30 or 36 x 36	24 x 24 or 30 x 30	30 x 30 or 36 x 36
35	160					
40	240					
45	320		Use Standard Size		Use Standard Size	
50	400					
55	500 [2]					
60	600 [2]			48 x 48		48 x 48
65	700 [2]					
70	800 [2]					
75	900 [2]					
*	* [3]					

* For typical sign spacings on expressways and freeways, see Part VI of the "Texas Manual on Uniform Traffic Control Devices" (TMUTCD) typical application diagrams or TCP Standard Sheets.

△ Minimum distance from work area to first Advance Warning sign and/or distance between each additional sign.

General Notes:
1. Special or larger size signs may be used as necessary.
2. Distance between signs should be increased as required to have 1500 feet advance warning.
3. Distance between signs should be increased as required to have ½ mile or more advance warning.
4. For use only on secondary roads or city streets where speeds are low.
5. Only diamond shaped warning sign sizes are indicated.
6. See sign size listing in "TMUTCD", Appendix A or the "Standard Highway Sign Design" manual for complete list of available sign design sizes.
7. Where two sizes are listed, see sign size listing in "TMUTCD", Appendix A or the "Standard Highway Sign Design" manual for proper size.

TYPICAL LOCATION OF CROSSROAD SIGNS

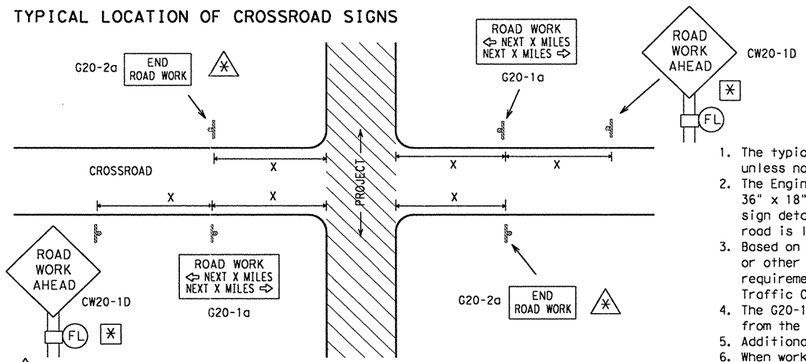

⁂ May be mounted on back of CW20-1D sign with approval of engineer. (See note 2 at right)

1. The typical minimum signing on a crossroad approach should be a CW20-1D ROAD WORK AHEAD sign and a G20-2a END ROAD WORK sign, unless noted otherwise in plans.
2. The Engineer may use the reduced size 36" x 36" ROAD WORK AHEAD (MCW20-1D) sign mounted back to back with the reduced size 36" x 18" END ROAD WORK (SG20-2a) sign on low volume crossroads. See the "Standard Highway Sign Designs for Texas" manual for sign details. The Engineer may omit the advance warning signs on low volume crossroads. The Engineer will determine whether a road is low volume. This information shall be shown in the plans.
3. Based on existing field conditions, the Engineer/Inspector may require additional signs such as FLAGGER AHEAD, LOOSE GRAVEL, or other appropriate signs. When additional signs are required, these signs will be considered part of the minimum requirements. The Engineer/Inspector will determine the proper location and spacing of any sign not shown on the BC sheets, Traffic Control Plan sheets or the Work Zone Standard Sheets.
4. The G20-1a sign shall be required on major crossroads to advise motorists of the length of construction in either direction from the intersection. The Engineer will determine whether a roadway is considered high volume.
5. Additional traffic control devices may be shown elsewhere in the plans for higher volume crossroads.
6. When work occurs in the intersection area, appropriate traffic control devices, as shown elsewhere in the plans or as determined by the Engineer/Inspector, shall be in place.

TYPICAL SIGNING AND TRAFFIC CONTROL DEVICE DETAILS FOR WORK BEGINNING AT THE CSJ LIMITS

(Less than 2000 feet between project limits and work area) (Typical signing shall be installed at all CSJ Limits)

TYPICAL DETAILS FOR WORK AREAS IN VARIOUS LOCATION WITHIN CSJ LIMITS

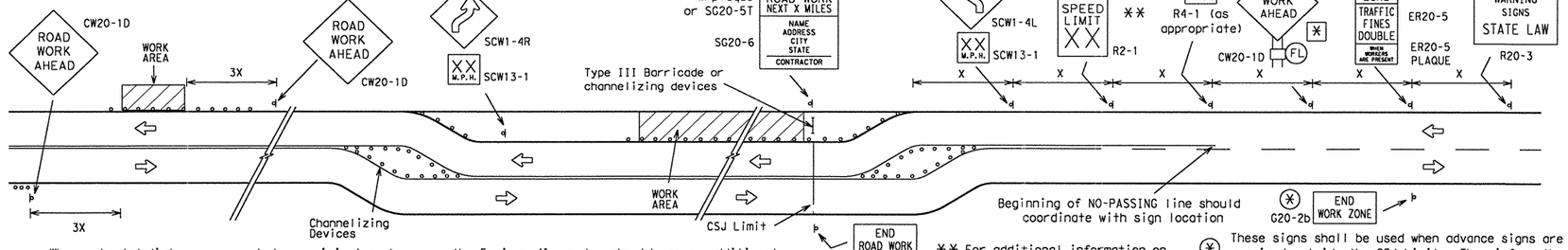

When extended distances occur between minimal work areas, the Engineer/Inspector should ensure additional Road Work Ahead (CW20-1D) signs are placed in advance of these work areas to remind drivers they are still within the project limits. See the applicable TCP sheets for exact location and spacing of signs and channelizing devices.

⁂⁂ For additional information on the placement of work zone speed limit signs, refer to BC(3)

⁂ These signs shall be used when advance signs are required outside the CSJ Limits. They inform the motorist of entering or leaving a work zone where traffic fines may double if workers are present.

TYPICAL DETAIL FOR PROJECT LIMIT AWAY FROM WORK AREA

(Greater than 2000 feet between project limits and work area) (Typical signing shall be installed at all CSJ Limits)

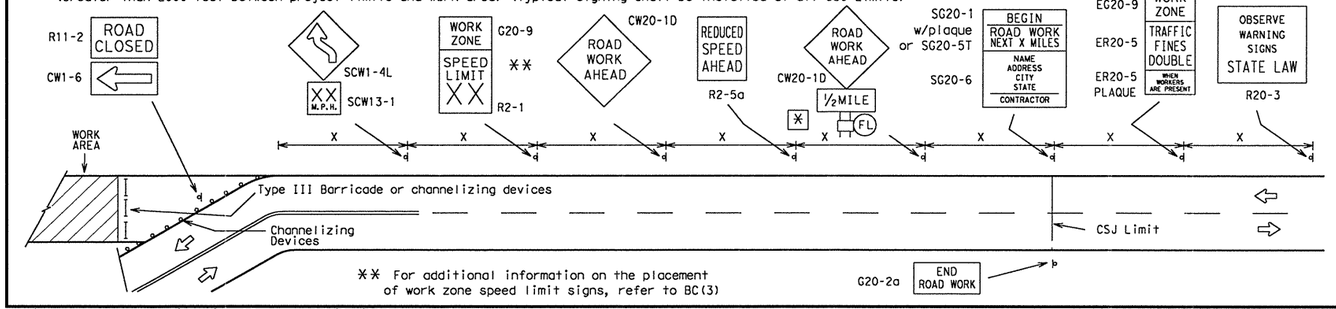

⁂⁂ For additional information on the placement of work zone speed limit signs, refer to BC(3)

LEGEND

- Sign
- (FL) Flashing Type A-Low Intensity Warning Light
- O O Channelizing Devices
- I Type III Barricade
- ⁂ The Type A Warning Lights shall not be used with signs manufactured with Type E Sheeting (Fluorescent Prismatic) meeting the requirements of Departmental Material Specification DMS-8300.
- X See Typical Construction Warning Sign Size and Spacing chart or the TMUTCD for sign spacing requirements.

Only pre-qualified products shall be used. A copy of the "Compliant Work Zone Traffic Control Devices List" (CWZTCD) describes pre-qualified products and their sources and may be obtained by contacting:

Standards Engineer
Traffic Operations Division - TE
Texas Department of Transportation
125 East 11th Street
Austin, Texas 78701-2483
Phone (512) 416-3120
Fax (512) 416-3299

Instructions to locate the "CWZTCD" on TxDOT website are:

Start at website - www.dot.state.tx.us
Click on "About TxDOT",
Click on "Functional Organizational Chart",
Click on Traffic Operations Box,
Click on "Compliant Work Zone Traffic Control Devices",
again click on "Compliant Work Zone Traffic Control Devices".
This site is printable.

STANDARD PLANS
TEXAS DEPARTMENT OF TRANSPORTATION
Traffic Operations Division

BARRICADE AND CONSTRUCTION PROJECT LIMIT STANDARD

2 of 12 BC(2)-03

© TxDOT 11-4-02	DN: BAS	CK: GRB	DW: FDN	CK: CAL
REVISIONS	STATE DISTRICT	FEDERAL REGION	FEDERAL AID PROJECT	SHEET
	AUS	6	CC 337-1-29	44
	COUNTY		CONTROL	SECTION	JOB	HIGHWAY
	WILLIAMSON		0337	01	029	SH 29

...\txdot standards\tcp\bc03.dgn 09/21/2004 11:19:37 AM

TYPICAL APPLICATION OF WORK ZONE SPEED LIMIT SIGNS

Work zone speed limits shall be regulatory, established in accordance with the "Procedures for Establishing Speed Zones," and approved by the Texas Transportation Commission.

Reduced speeds should only be posted in the vicinity of work activity and not throughout the entire project.

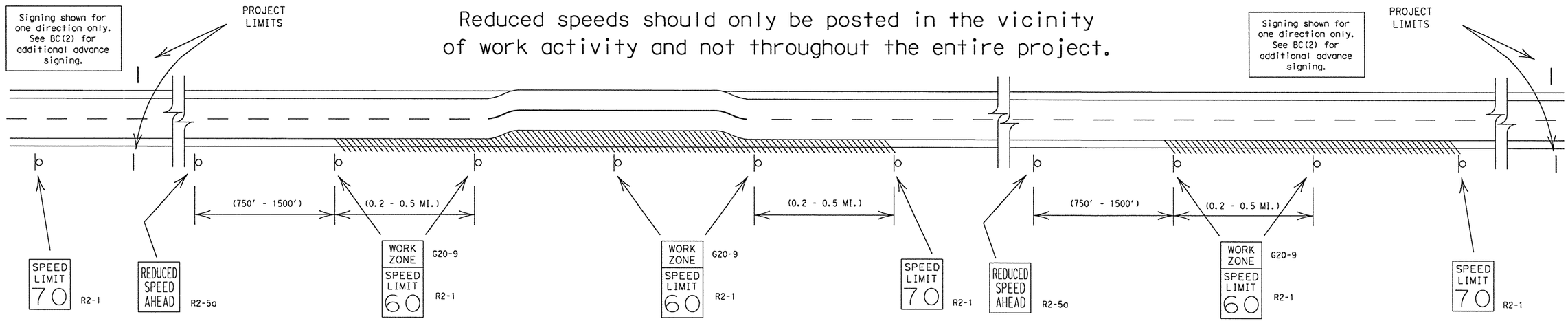

GUIDANCE FOR USE:

LONG/INTERMEDIATE TERM WORK ZONE SPEED LIMITS

This type of work zone speed limit should be included on the design of the traffic control plans when restricted geometrics with a lower design speed are present in the work zone and modification of the geometrics to a higher design speed is not feasible.

LONG/INTERMEDIATE TERM WORK ZONE SPEED LIMIT signs should be posted and visible to the motorists at all times. Work activity in the area of reduced speed zone should be greater than 12 consecutive hours per day. Work activity may also be defined as a change in the roadway that requires a reduced speed for motorists to safely negotiate the work area, including:

a) rough road or damaged pavement surface
b) substantial alteration of roadway geometrics (diversions)
c) construction detours
d) grade
e) width
f) other conditions readily apparent to the driver

As long as any of these conditions exist, the work zone speed limit signs should remain in place.

SHORT TERM WORK ZONE SPEED LIMITS

This type of work zone speed limit should be included on the design of the traffic control plans when workers or equipment are not behind concrete barrier, work activity is within 15 feet of pavement edge or actually on the pavement.

SHORT TERM WORK ZONE SPEED LIMIT signs should be posted and visible to the motorists only when work activity is present. Work activity in the area of reduced speed should be less than 12 consecutive hours. When work activity is not present, signs should be covered with an approved sign cover or removed from work area.

GENERAL NOTES:

1. Regulatory work zone speed limits should be used only for sections of construction projects where speed control is of major importance.
   Regulatory work zone speed signs (R2-1) should be removed during periods when they are not needed to minimize interference with traffic.
2. Regulatory work zone speed limit signs shall be placed on supports at a 7 foot mounting height.
3. Speed zone signs are illustrated for one direction of travel and are normally posted for each direction of travel.
4. Frequency of speed limit signs should be:
   40 mph and greater 0.2 to 2 miles
   35 mph and less 0.2 to 1 mile
5. Regulatory speed limit signs shall have black legend and border on a white reflective background.
6. Fabrication, errection and maintenance of REDUCED SPEED AHEAD sign, WORK ZONE plaque and SPEED LIMIT signs shall not be paid for directly, but shall be considered subsidiary to Item 502.
7. Turning signs from view, laying signs over or down will not be allowed, unless otherwise noted.
8. Techniques that may help reduce traffic speeds.
   (In order of effectiveness.)
   A. Flagger stationed next to sign.
   B. Law enforcement.
   C. Portable changeable message sign (PCMS).
   D. Low-power radar transmitter.
9. Refer to "Work Zone Speed Limit Work Sheets 1 and 2" to determine when a construction speed zone should be required.

STANDARD PLANS
Texas Department of Transportation
Traffic Operations Division

BARRICADE AND CONSTRUCTION WORK ZONE SPEED LIMIT STANDARD

3 of 12 BC(3)-03

© TxDOT 11-4-02	DN: - JWT	CK: - GRB	DW: - FDN	CK: - CAL
REVISIONS	STATE DISTRICT: AUS	FEDERAL REGION: 6	FEDERAL AID PROJECT: CC 337-1-29	SHEET: 45
	COUNTY: WILLIAMSON	CONTROL: 0337	SECTION: 01	JOB: 029	HIGHWAY: SH 29

...\txdot standards\tcp\bc03.dgn 09/21/2004 11:19:37 AM

TYPICAL MINIMUM CLEARANCES FOR LONG TERM AND INTERMEDIATE TERM SIGNS

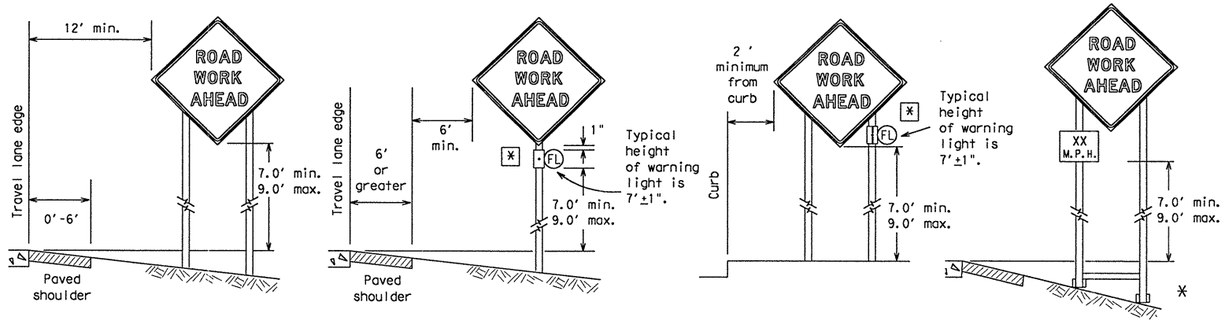

It is the intent of these plans to provide positive guidance to motorists throughout the project limits by the use of signs, pavement markings, delineation and/or channelizing devices. All traffic control devices shall conform with the "Texas Manual on Uniform Traffic Control Devices for Streets and Highways" (TMUTCD) and the "Compliant Work Zone Traffic Control Devices List" list (CWZTCD).

* When placing skid supports on unlevel ground, the leg post lengths must be adjusted so the sign appears straight and plumb. Objects shall NOT be placed under skids as a means of leveling.

ATTACHMENT FOR WOODEN SIGN SUPPORTS

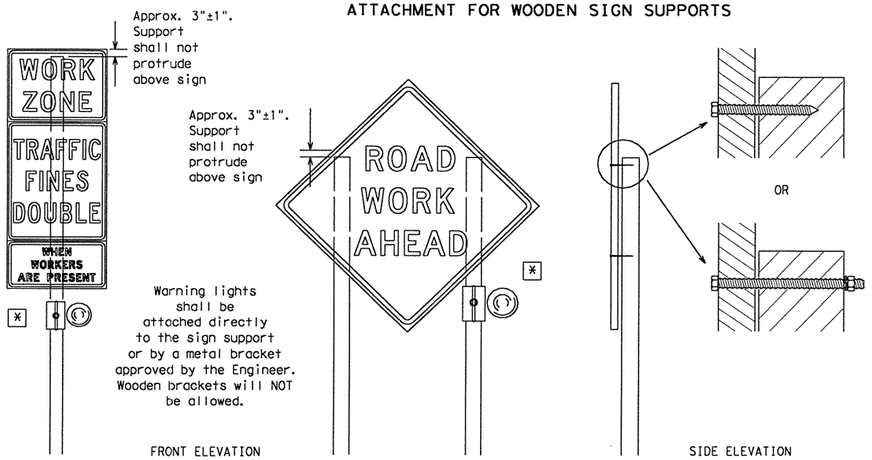

Attachment to wooden supports will be by bolts and nuts or screws. Use TxDOT's or manufacturer's recommended procedures for attaching sign substrates to other types of sign supports

Nails will NOT be allowed.

Each sign shall be attached directly to the sign support. Multiple signs shall not be joined or spliced by any means. Supports shall not be extended or repaired by splicing or other means.

Only pre-qualified products shall be used. A copy of the "Compliant Work Zone Traffic Control Devices List" (CWZTCD) describes pre-qualified products and their sources and may be obtained by contacting:

Standards Engineer
Traffic Operations Division - TE
Texas Department of Transportation
125 East 11th Street
Austin, Texas 78701-2483
Phone (512) 416-3120
Fax (512) 416-3299

Instructions to locate the "CWZTCD" on TxDOT website are:

Start at website - www.dot.state.tx.us
Click on "About TxDOT",
Click on "Functional Organizational Chart",
Click on Traffic Operations Box,
Click on "Compliant Work Zone Traffic Control Devices",
again click on "Compliant Work Zone Traffic Control Devices".
This site is printable.

(FL) Flashing Type A - Low Intensity Warning Light

* The Type A Warning lights shall not be used with Type E Sheeting (Fluorescent Prismatic) meeting the requirements of DMS-8300.

CONTRACTOR REQUIREMENTS FOR MAINTAINING PERMANENT SIGNS WITHIN THE PROJECT LIMITS

1. Permanent signs are used to give notice of traffic laws or regulations, call attention to conditions that are potentially hazardous to traffic operations, show route designations, destinations, directions, distances, services, points of interest, and other geographical, recreational, or cultural information. Drivers proceeding through a work zone need the same, if not better route guidance as normally installed on a roadway without construction.
2. When permanent regulatory or warning signs conflict with work zone conditions, remove or cover the permanent signs until the permanent sign message matches the roadway condition.
3. When existing permanent signs are moved and relocated due to construction purposes, they shall be visible to motorists at all times.
4. If existing signs are to be relocated on their original supports, they shall be installed on crashworthy bases as shown on the SMD Standard sheets. The signs shall meet the required mounting heights shown on the BC Sheets or the SMD Standards. This work should be paid for under the appropriate pay item for relocating existing signs.
5. If permanent signs are to be removed and relocated using temporary supports, the Contractor shall use crashworthy supports as shown on the BC sheets or the CWZTCD. The signs shall meet the required mounting heights shown on the BC Sheets or the SMD Standards during construction. This work should be paid for under the appropriate pay item for relocating existing signs.
6. Any sign or traffic control device that is struck or damaged by the Contractor or his/her construction equipment shall be replaced as soon as possible by the Contractor to ensure proper guidance for the motorists. This will be subsidiary to Item 502.

GENERAL NOTES FOR WORK ZONE SIGNS
1. Contractor shall install and maintain signs in a straight and plumb condition and/or as directed by the Engineer.
2. Wooden sign posts shall be painted white.
3. Barricades shall NOT be used as sign supports.
4. Nails shall NOT be used to attach signs to any support.
5. All signs shall be installed in accordance with the plans or as directed by the Engineer. Signs shall be used to regulate, warn, and guide the traveling public safely through the work zone.
6. The Contractor may furnish either the sign design shown in the plans or in the "Standard Highway Sign Designs for Texas" (SHSD). The Engineer/Inspector may require the Contractor to furnish other work zone signs that are shown in the TMUTCD but may have been omitted from the plans. Any variation in the plans shall be documented by written agreement between the Engineer and the Contractor's Responsible Person. All changes must be documented in writing before being implemented. This can include documenting the changes in the Inspector's TxDOT diary and having both the Inspector and Contractor initial and date the agreed upon changes. The additional signs requested by the Engineer/Inspector shall not be subsidiary.
7. The Contractor shall furnish sign supports listed in the "Compliant Work Zone Traffic Control Device List" (CWZTCD). The Contractor shall install the sign support in accordance with the manufacturer's recommendations. If there is a question regarding installation procedures, the Contractor shall furnish the Engineer a copy of the manufacturer's installation recommendations so that the Engineer can verify the correct procedures are being followed.
8. The contractor is responsible for sign installations and replacing signs with damaged or cracked substrates and/or damaged or marred reflective sheeting as directed by the Engineer/Inspector.
9. Identification markings may be shown only on the back of the sign substrate. The maximum height of letters and/or company logos used for identification shall be 1".
10. The Contractor shall replace damaged wood posts. New or damaged wood sign posts shall not be spliced.

Duration of Work (as defined by the "Texas Manual on Uniform Traffic Control Devices" Part VI)
1. The types of sign supports, the size of signs, and the type of sign substrates can vary based on the type of work being performed. The Engineer is responsible for selecting the appropriate size sign for the type of work being performed. The Contractor is responsible for ensuring that the sign support and substrate meets crashworthiness and length of work requirements.
   a. Long-term stationary - work that occupies a location more than 3 days.
   b. Intermediate-term stationary - work that occupies a location from overnight to 3 days.
   c. Short-term stationary - daytime work that occupies a location from 1 to 12 hours.
   d. Short, duration - work that occupies a location up to 1 hour.
   e. Mobile - work that moves intermittently or continuously. Does not stop for more than 15 minutes at a time.

SIGN MOUNTING HEIGHT
1. The bottom of Long-term/Intermediate-term signs shall be at least 7 feet, but not more than 9 feet, above the paved surface.
2. The bottom of Short-term/Short Duration signs shall be a minimum of 1 foot above the pavement surface but no more than 2 feet above the ground.
3. Long-term/Intermediate-term Signs may be used in lieu of Short-term/Short Duration signing.
4. Short-term/Short Duration signs shall be used only during daylight and shall be removed at the end of the workday.
5. Regulatory signs shall be mounted at least 7 feet, but not more than 9.0 feet, above the paved surface regardless of work duration.

SIZE OF SIGNS
1. The Engineer may allow the use of smaller size construction warning signs on secondary roads or city streets where speeds are low if the sign size is listed as an option on the "Typical Construction Warning Sign Size and Spacing" chart shown on BC(2).
2. The Contractor shall furnish the sign sizes shown in plans, the BC Sheets, the TCP sheets or as directed by the Engineer.

SIGN SUBSTRATES
1. The Contractor shall ensure that the sign substrate is allowed for the type of sign support that is being used. The CWZTCD lists each substrate that can be used on the different types and models of sign supports.
2. "Mesh" type materials are NOT an approved sign substrate.
3. All wooden individual sign panels fabricated from 2 or more pieces shall have one or more plywood cleat, 1/2" thick by 6" wide, fastened to the back of the sign and extending fully across the sign. The cleat shall be attached to the back of the sign using wood screws that do not penetrate the face of the sign panel. The screws shall be placed on both sides of the splice and spaced at 6" centers. The Engineer may approve other methods of splicing the sign faces.

REFLECTIVE SHEETING
1. Reflectorized signs shall be constructed of sheeting meeting the color and retro-reflectivity requirements of DMS-8300 or DMS-8310. The DMS specifications can be accessed from the following web address:
   http://manuals.dot.state.tx.us:80/dynaweb/colmates/dms/@Generic_BookView
2. White sheeting, meeting the requirements of DMS-8300 Type C (High Specific Intensity), shall be used for signs with white background and channelizing devices.
3. Orange sheeting, meeting the requirements of DMS-8300 Type E (Fluorescent Prismatic), shall be used for signs with orange backgrounds.

SIGN LETTERS
1. All sign letters and numbers shall be clear, and open rounded type uppercase alphabet letters as approved by the Federal Highway Administration (FHWA) and as published in the "Standard Highway Sign Design for Texas" manual. Signs, letters and numbers shall be of first class workmanship in accordance with Department Standards and Specifications.

REMOVING OR COVERING
1. When sign messages may be confusing or do not apply, the signs shall be removed or completely covered.
2. Long-term stationary or intermediate stationary signs installed on square metal tubing may be turned away from traffic 90 degrees when the sign message is not applicable. This type of sign support meets the crashworthiness standards regardless of the direction of impact. This technique may not be used for signs installed in the median of divided highways or near any intersections where the sign may be seen from approaching traffic.
3. Signs installed on skids shall not be turned at 90 degree angles to the roadway. These signs should be removed or completely covered when not required.
4. When signs are covered, the material used shall be opaque, such as heavy mil black plastic.
5. Burlap shall NOT be used to cover signs.
6. Duct tape or other adhesive material shall NOT be affixed to a sign face. These materials can damage the retroreflectivity of sign sheeting.
7. Signs shall be removed upon completion of the work.

SIGN SUPPORT WEIGHTS
1. Where sign supports require the use of weights to keep from turning over, the use of sandbags with dry, cohesionless sand is recommended.
2. The sandbags will be tied shut to keep the sand from spilling and to maintain a constant weight.
3. Rock, concrete, iron, steel or other solid objects will not be permitted for use as sign support weights.
4. Sandbags should weigh a minimum of 35 lbs and a maximum of 50 lbs.
5. Sandbags shall be made of a durable material that tears upon vehicular impact.
6. Rubber (such as tire inner tubes) shall NOT be used for sandbags.
7. Rubber ballasts (such as those used with cones or edgeline channelizers) shall NOT be used as sign support weights.
8. Sandbags shall only be placed along or laid over the base supports of the traffic control device and shall not be suspended above ground level or hung with rope, wire, chains or other fasteners. Sandbags shall be placed along the length of the skids to weigh down the sign support.
9. Sandbags shall NOT be placed under the skid and shall not be used to level sign supports placed on slopes.

STANDARD PLANS
Texas Department of Transportation
Traffic Operations Division

BARRICADE AND CONSTRUCTION TEMPORARY SIGN NOTES STANDARD

4 of 12 BC(4)-03

©TxDOT 11-4-02		DN: - BAS	CK: - GRB	DW: - FDN	CK: - CAL
REVISIONS	STATE DISTRICT	FEDERAL REGION	FEDERAL AID PROJECT		SHEET
	AUS	6	CC 337-1-29		46
	COUNTY		CONTROL	SECTION	JOB	HIGHWAY
	WILLIAMSON		0337	01	029	SH 29

...\txdot standards\tcp\bc03.dgn 09/21/2004 11:19:38 AM

EXAMPLES OF SKID MOUNTED SIGN SUPPORTS

LONG/INTERMEDIATE TERM STATIONARY - PORTABLE SKID MOUNTED SIGN SUPPORTS □

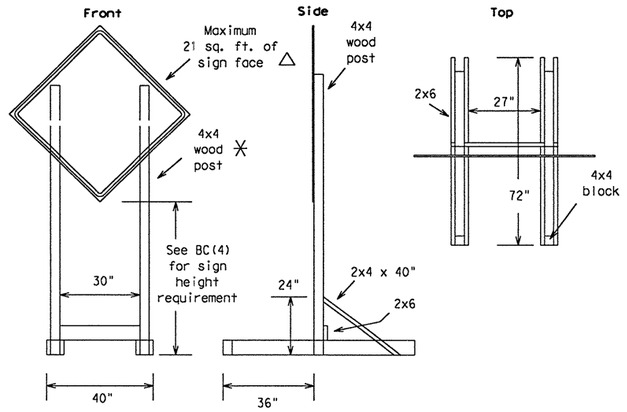

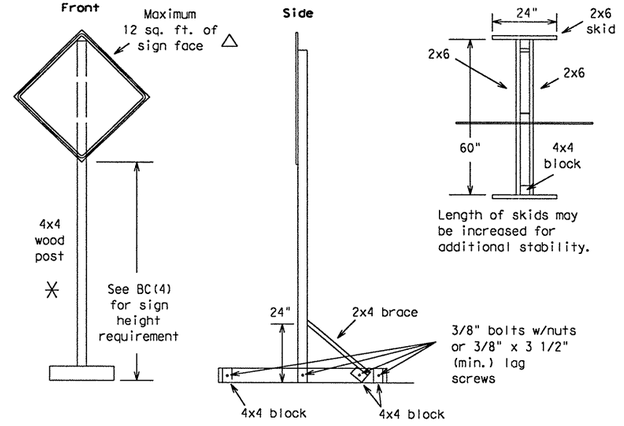

SHORT TERM STATIONARY/SHORT DURATION - PORTABLE SIGN SUPPORTS □

For Daytime use only.
1 Foot Mounting Height

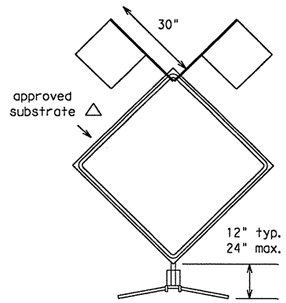

Flags as required by Engineer or as shown on plans

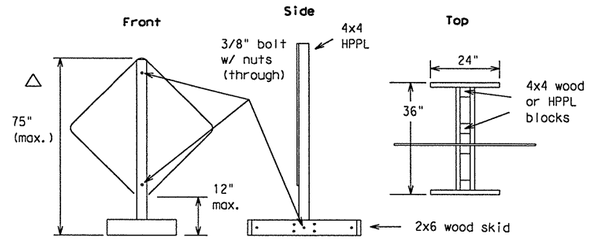

The upright SHALL be made of hollow-profile plastic lumber (HPPL). Wood or metal shall NOT be used.

EXAMPLES OF GROUND MOUNTED SIGN SUPPORTS

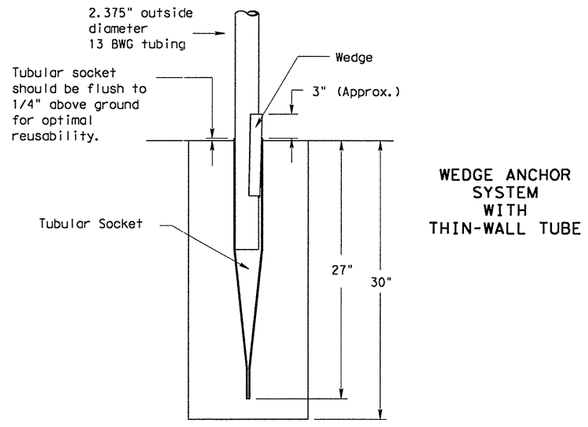

WEDGE ANCHOR SYSTEM WITH THIN-WALL TUBE

The wedge anchor system with thin wall tubing may be used to support up to 10 sq. ft. of sign area.

Where solid rock is encountered at ground level, the foundation shall be a minimum depth of 18 inches. When solid rock is encountered below ground level, the foundation shall extend in the solid rock a minimum depth of 18 inches or provide a minimum foundation depth of 30 inches. If solid rock is encountered, the socket/stub may be reduced in length as required to a min. length of 18 inches. Any material removed from the socket/stub shall be from the bottom and the clearance requirements shown above must still be adhered to. The inner surfaces of the socket/stub must remain free of debris.
Install Wedge Anchor System per manufacturer recommendations.
Attach the sign to the sign post.
Insert the sign post into the socket and align the sign face with the roadway.
Drive the wedge into the socket to secure post. This will leave approximately 3 inches of the wedge exposed.

Supports shall be straight within 1/4 inch per 5 feet of length and shall have a smooth, uniform finish free from defects affecting strength or appearance. Any bolt holes and sheared ends shall be free from burrs.

WING CHANNEL

Lap-splice/base bolted anchor

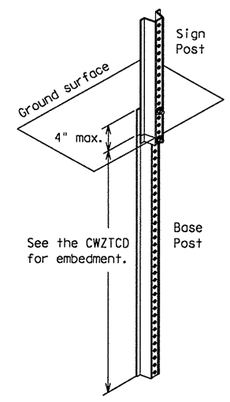

PERFORATED SQUARE METAL TUBING

With Anchor

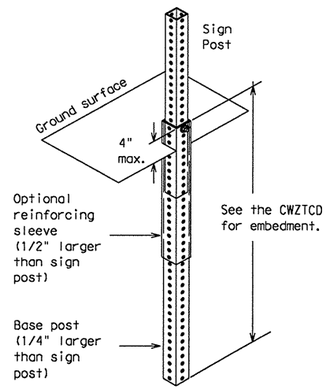

Refer to the CWZTCD and the manufacturer's installation procedure for each type sign support.
The maximum sign square footage shall adhere to the manufacturer's recommendation. Two post installations can be used for larger signs.

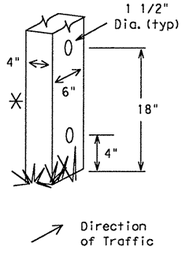

WOOD POST SYSTEM FOR GROUND MOUNTED SIGN SUPPORTS

Nominal Post Size	No. of Posts	Maximum Sq. feet of Sign Face	Minimum Soil Embedment	Drilled Hole(s) Required
4 x 4	1	12	36"	NO
4 x 4	2	21	36"	NO
4 x 6	1	21	36"	YES
4 x 6	2	36	36"	YES

No more than 2 sign posts shall be mounted within a 7 ft. circle.

When project is completed, all sign supports and foundations shall be removed from the project site. This will be considered subsidiary to Item 502.

□ See BC(4) for definition of "Work Duration."

✳ Sign posts MUST be one piece. Splicing will NOT be allowed. Posts shall be painted white.

△ See the CWZTCD for the type of sign substrate that can be used for each approved sign support.

Only pre-qualified products shall be used. A copy of the "Compliant Work Zone Traffic Control Devices List" (CWZTCD) describes pre-qualified products and their sources and may be obtained by contacting:

Standards Engineer
Traffic Operations Division - TE
Texas Department of Transportation
125 East 11th Street
Austin, Texas 78701-2483
Phone (512) 416-3120
Fax (512) 416-3299

Instructions to locate the "CWZTCD" on TxDOT website are:

Start at website - www.dot.state.tx.us
Click on "About TxDOT",
Click on "Functional Organizational Chart",
Click on Traffic Operations Box,
Click on "Compliant Work Zone Traffic Control Devices",
again click on "Compliant Work Zone Traffic Control Devices".
This site is printable.

STANDARD PLANS
Texas Department of Transportation
Traffic Operations Division

BARRICADE AND CONSTRUCTION TYPICAL SIGN SUPPORT STANDARD

5 of 12 BC(5)-03

© TxDOT 11-4-02	DN: JWT	CK: GRB	DW: FDN	CK: CAL

REVISIONS	STATE DISTRICT	FEDERAL REGION	FEDERAL AID PROJECT	SHEET
	AUS	6	CC 337-1-29	47

COUNTY	CONTROL	SECTION	JOB	HIGHWAY
WILLIAMSON	0337	01	029	SH 29

...\txdot standards\tcp\bc03.dgn 09/21/2004 11:19:37 AM

PORTABLE CHANGEABLE MESSAGE SIGNS

1. The Engineer/Inspector shall approve all messages used on portable changeable message signs (PCMS).
2. PCMS placed on the shoulder or within the R-O-W, but are not behind a concrete traffic barrier shall have a minimum of four plastic drums placed perpendicular to traffic, on the upstream side of the PCMS.
3. Messages on PCMS should contain no more than 8 words (four to eight characters per word), not including simple words such as "TO," "FOR," "AT," etc.
4. Messages should consist of a single phase, or two phases that alternate. Three-phase messages are not allowed.
5. Each phase of the message should convey a single thought.
6. Use the word "EXIT" to refer to an exit ramp on a freeway; i.e., "EXIT CLOSED." Do not use the term "RAMP."
7. Always use the route or interstate designation (IH, US, SH, FM) along with the number when referring to a roadway.
8. Specify the actual days of the week; e.g., TUES THROUGH FRI or TUES-FRI in the coming week that work activity will occur.
9. The message term "WEEKEND" should be used only if the work is to start on Saturday morning and end by Sunday evening at midnight. Actual days and hours of work should be displayed on the PCMS if work is to begin on Friday evening and/or continue into Monday morning.
10. The Engineer/Inspector may select one of two options which are available for displaying a two-phase message on a PCMS. Each phase may be displayed for either four seconds each or for two seconds each.
11. Do not "flash" messages or words included in a message. The message should be steady burn or continuous while displayed.
12. Do not present redundant information on a two-phase message; i.e., keeping two lines of the message the same and changing the third line.
13. Do not use the words "Danger" or "Caution" in message.
14. Do not display the message "LANES SHIFT LEFT" or "LANES SHIFT RIGHT" on a PCMS. Drivers do not understand the message.
15. Do not display messages that scroll horizontally or vertically across the face of the sign.
16. The following table lists abbreviated words and two-word phrases that are acceptable for use on a PCMS. Both words in a phrase must be displayed together. Words or phrases not on this list should not be abbreviated.

Word or Phrase	Abbreviation	Word or Phrase	Abbreviation
Access Road	ACCES RD	Miles	MI
Air Quality	AIR QLTY	Miles Per Hour	MPH
Avenue	AVE	Time Minutes	Time MIN
Best Route	BEST RTE	Monday	MON
Boulevard	BLVD	Normal	NORM
Bridge	BRDG	North	N
Cannot	CANT	Parking	PKING
Center	CNTR	Parking Lot	PRK LOT
Construction Ahead	CONST AHEAD	Road	RD
Detour Route	DETOUR RTE	Right Lane	RGT LN
East	E	Saturday	SAT
Emergency	EMER	Service Road	SERV RD
Emergency Vehicle	EMER VEH	Shoulder	SHLDR
Entrance, Enter	ENT	Slippery	SLIP
Express Lanes	EXP LANE	South	S
Expressway	EXPWY	Speed	SPD
Distance Feet	Distance FT	Street	ST
Fog Ahead	FOG AHD	Sunday	SUN
Freeway	FRWY, FWY	Telephone	PHONE
Freeway Blocked	FWY BLKD	Thursday	THURS
Friday	FRI	To Downtown	TO DWNTN
Hazardous Driving	HAZ DRIVING	Traffic	TRAF
Highway	HWY	Travelers	TRVLRS
Hours	HR	Tuesday	TUES
Information	INFO	Turnpike	Name TRNPK
Left	LFT	Upper Level	UPPR LVL
Left Lane	LFT LN	Warning	WARN
Lane Closed	LN CLSD	Wednesday	WED
Lower Level	LOWR LVL	Weight Limit	WT LIMIT
Maintenance	MAINT	Wet Pavement	WET PVMT
Roadway designation #	IH-number, US-number, SH-number, FM-number	West	W

WHEN NOT IN USE, REMOVE THE PCMS FROM THE RIGHT-OF-WAY OR PLACE THE PCMS BEHIND CONCRETE TRAFFIC BARRIER.

TYPICAL FLASHING ARROW PANEL

1. The Flashing Arrow Panel should be used for all lane closures on multi-lane roadways, or slow moving maintenance or construction activities on the travel lanes.
2. Flashing Arrow Panels should not be used on two-lane, two-way roadways, detours, diversions or work on shoulders unless the "CAUTION" display (see detail below) is used.
3. The Engineer/Inspector shall choose all appropriate signs, barricades and/or other traffic control devices that should be used in conjunction with the Flashing Arrow Panel.
4. The Flashing Arrow Panel should be able to display the following symbols:

Flashing RIGHT (LEFT) ARROW

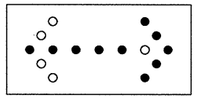

Flashing DOUBLE ARROW

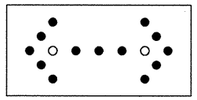

Flashing CAUTION

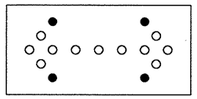

5. The "CAUTION" display consists of four corner lamps flashing simultaneously.
6. The straight line caution display is NOT ALLOWED.
7. The Flashing Arrow Panel shall be capable of minimum 50 percent dimming from rated lamp voltage. The flashing rate of the lamps shall not be less than 25 nor more than 40 flashes per minute.
8. Minimum lamp "on time" shall be approximately 50 percent for the flashing arrow and equal intervals of 25 percent for each sequential phase of the flashing chevron.
9. The sequential arrow display is NOT ALLOWED.
10. The flashing arrow display is the TxDOT standard; however, the sequential Chevron display may be used during daylight operations.

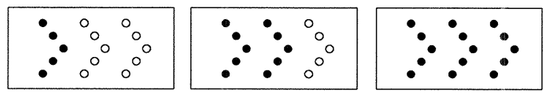

11. The Flashing Arrow Panel shall be mounted on a vehicle, trailer or other suitable support.
12. A Flashing Arrow Panel SHOULD NOT BE USED to laterally shift all lanes of traffic on a multi-lane roadway at once.

REQUIREMENTS

TYPE	MINIMUM SIZE	MINIMUM NUMBER OF PANEL LAMPS	MINIMUM VISIBILITY DISTANCE
B	30 x 60	13	3/4 mile
C	48 x 96	15	1 mile

ATTENTION: Flashing Arrow Panels shall be equipped with automatic dimming devices.

WHEN NOT IN USE, REMOVE THE ARROW PANEL FROM THE RIGHT-OF-WAY OR PLACE THE ARROW PANEL BEHIND CONCRETE TRAFFIC BARRIER.

TYPE C DELINEATORS FOR CONCRETE TRAFFIC BARRIER AND ATTENUATORS

1. Type C Delineators shall be prequalified, and conform to the color and reflectivity requirements of DMS-8600. A list of prequalified Type C Delineators can be found at the following Web site: ftp://ftp.dot.state.tx.us/pub/txdot-info/gsd/pdf/dms8600preq.pdf.
2. Color of delineators shall be as specified in the "Texas Manual on Uniform Traffic Control Devices" (TMUTCD). The cost of the Type C Delineators shall be considered subsidiary to Item 502.

CONCRETE TRAFFIC BARRIER (CTB)

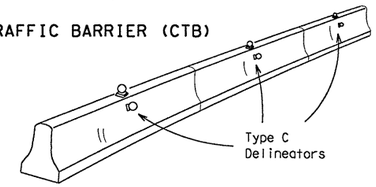

3. Two (2) Type C Delineators should be mounted on each section of CTB in approximately the midsection of the CTB. The Type C Delineator on the side of the CTB shall be installed directly below the Type C Delineator mounted on top of the CTB.
4. Maximum spacing of Type C Delineators is 40 feet.
5. Pavement markers or temporary flexible-reflective roadway marker tabs shall NOT be used as CTB delineation.
6. Attach Type C Delineators on CTB as per manufacturer's recommendations.
7. Missing or damaged Type C Delineators shall be replaced as directed by the Engineer.

LOW PROFILE CONCRETE BARRIER (LPCB)

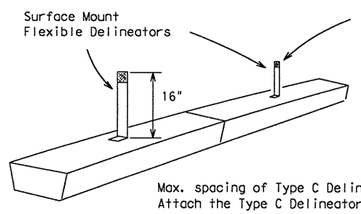

Max. spacing of Type C Delineators is 20 feet. Attach the Type C Delineators as per manufacturer's recommendations.

DELINEATION OF END TREATMENTS

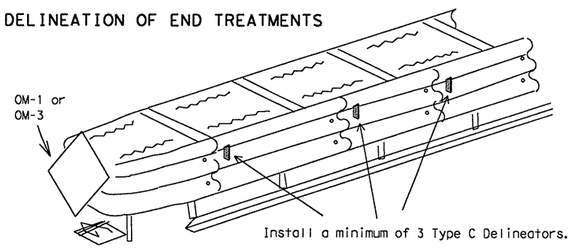

	APPROACHING TRAFFIC	
	BOTH SIDES	ONE SIDE
DELINEATION	OM-1	OM-3 or Vertical Panel

Attach the Type C Delineators as per manufacturer's recommendations.

WARNING LIGHTS

1. Warning lights shall meet the requirements of the TMUTCD.
2. Warning lights shall NOT be installed on barricades.
3. Type A-Low Intensity Flashing Warning Lights are commonly used with signs. They are intended to warn of an approaching potentially hazardous area. Their use shall be as indicated on this sheet and/or other sheets of the plans by the designation " FL". The Type A Warning Lights shall not be used with signs manufactured with Type E Sheeting (Fluorescent Prismatic) meeting the requirements of Departmental Material Specification DMS-8300.
4. Type-C Steady Burn Lights are intended to be used in a series for delineation to supplement other traffic control devices. Their use shall be as indicated on this sheet and/or other sheets of the plans by the designation " SB ".
5. The Engineer/Inspector or the plans shall specify the location and type of warning lights to be installed on the traffic control devices.
6. When required by the Engineer, the Contractor shall furnish a copy of the warning lights certification. The warning light manufacturer will certify the warning lights meet the requirements of the latest ITE Purchase Specifications for Flashing and Steady-Burn Warning Lights.

END TREATMENTS FOR CTB'S USED IN WORK ZONES

End treatments used on CTB's in work zones shall meet crashworthy standards as defined in the National Cooperative Highway Research Report 350. Refer to the CWZTCD List for approved end treatments and manufacturers.

Only pre-qualified products shall be used. A copy of the "Compliant Work Zone Traffic Control Devices List" (CWZTCD) describes pre-qualified products and their sources and may be obtained by contacting:

Standards Engineer
Traffic Operations Division - TE
Texas Department of Transportation
125 East 11th Street
Austin, Texas 78701-2483
Phone (512) 416-3120
Fax (512) 416-3299

Instructions to locate the "CWZTCD" on TxDOT website are:

Start at website - www.dot.state.tx.us
Click on "About TxDOT",
Click on "Functional Organizational Chart",
Click on Traffic Operations Box,
Click on "Compliant Work Zone Traffic Control Devices",
again click on "Compliant Work Zone Traffic Control Devices".
This site is printable.

TRUCK-MOUNTED ATTENUATORS

1. Truck-mounted attenuators (TMA) used on TxDOT facilities must meet the requirements outlined in the National Cooperative Highway Research Report No. 350 (NCHRP 350).
2. Refer to the CWZTCD for the requirements of Level 2 or Level 3 TMAs.
3. Refer to the dates shown in the CWZTCD to ensure that the TMA meets the age requirements and the crashworthiness criteria established by the Federal Highway Administration (FHWA) for TMAs.
4. Refer to the CWZTCD for a list of approved TMAs.
5. TMAs are required on freeways unless otherwise noted in the plans.
6. A TMA should be used anytime that it can be positioned approximately 100 feet or less in advance of the area of crew exposure without adversely affecting the work performance.
7. The only reason a TMA should not be required is when a work area is spread down the roadway and the work crew is an extended distance from the TMA.

STANDARD PLANS
Texas Department of Transportation
Traffic Operations Division

BARRICADE AND CONSTRUCTION ARROW & MESSAGE SIGNS, REFLECTORS & WARNING LIGHT STANDARD

6 of 12 BC(6)-03

© TxDOT 11-4-02

DN: - BAS	CK: - GRB	DW: - FDN	CK: - CAL

REVISIONS	STATE DISTRICT	FEDERAL REGION	FEDERAL AID PROJECT	SHEET
	AUS	6	CC 337-1-29	48

COUNTY	CONTROL	SECTION	JOB	HIGHWAY
WILLIAMSON	0337	01	029	SH 29

...\txdot standards\tcp\bc03.dgn 09/21/2004 11:19:37 AM

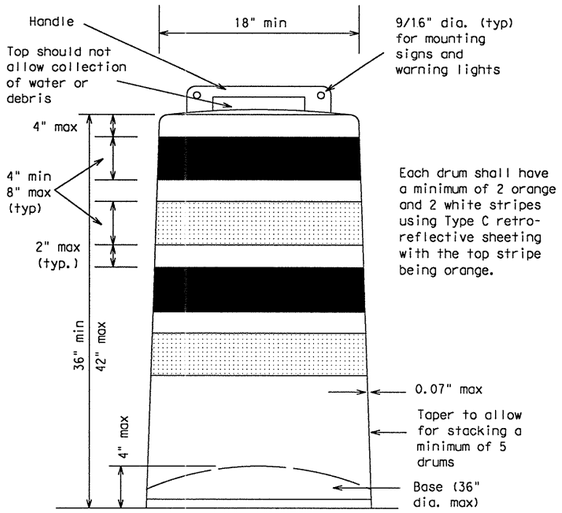

GENERAL NOTES

1. Drums and all related items shall comply with the requirements of the current version of the "Texas Manual on Uniform Traffic Control Devices" (TMUTCD) and the "Compliant Work Zone Traffic Control Devices List" (CWZTCD).
2. Drums, bases, and related materials shall exhibit good workmanship and shall be free from objectionable marks or defects that would adversely affect their appearance or serviceability.
3. ⚠1 The Contractor shall have a maximum of 24 hours to replace any plastic drums or other traffic control devices identified for replacement by the Engineer/Inspector. The replacement device must be an approved device.

Prequalified plastic drums shall meet the following requirements:

GENERAL DESIGN REQUIREMENTS

1. Plastic drums shall be a two-piece design; the "body" of the drum shall be the top portion and the "base" shall be the bottom.
2. The body and base shall lock together in such a manner that the body separates from the base when impacted by a vehicle traveling at a speed of 20 MPH or greater but prevents accidental separation due to normal handling and/or air turbulence created by passing vehicles.
3. Plastic drums shall be constructed of lightweight flexible, and deformable materials. The Contractor shall NOT use metal drums or single piece plastic drums as channelization devices or sign supports.
4. Drums shall present a profile that is a minimum of 18 inches in width at the 36 inch height when viewed from any direction. The height of drum unit (body installed on base) shall be a minimum of 36 inches and a maximum of 42 inches.
5. The top of the drum shall have a built-in handle for easy pickup and shall be designed to drain water and not collect debris. The handle shall have a minimum of two widely spaced 9/16 inch diameter holes to allow attachment of a warning light, delineator reflector unit or non-plywood sign.
6. The exterior of the drum body shall have a minimum of four alternating orange and white retroreflective circumferential stripes not less than 4 inches nor greater than 8 inches in width. Any non-reflectorized space between any two adjacent stripes shall not exceed 2 inches in width.
7. Bases shall have a maximum width of 36 inches, a maximum height of 4 inches, and a minimum of two footholds of sufficient size to allow base to be held down while separating the drum body from the base.
8. Plastic drums shall be constructed of ultra-violet stabilized, orange, high-density polyethylene (HDPE) or other approved material.
9. Drum body shall have a minimum unballasted weight of 7.7 lbs. and maximum unballasted weight of 11 lbs. The wall of the drum body shall be a minimum of 0.07 inch in thickness. Weight of any drum supplied shall not vary more than 0.5 lb. from that of the prequalified sample.
10. Drum and base shall be marked with manufacturer's name and model number.

RETROREFLECTIVE SHEETING

1. The stripes used on drums shall be constructed of sheeting meeting the color and retroreflectivity requirements of Departmental Materials Specification DMS-8300, "Flat Surface Reflective Sheeting." High Specific Intensity (Type C) retro-reflective sheeting shall be supplied unless otherwise specified in the plans.
2. The sheeting shall be suitable for use on and shall adhere to the drum surface such that, upon vehicular impact, the sheeting shall remain adhered in-place and exhibit no delaminating, checking, cracking, or loss of retroreflectivity other than that loss due to abrasion of the sheeting surface.

BALLAST

1. Unballasted bases shall be large enough to hold up to 50 lbs. of sand. This base, when filled with the ballast material, should weigh between 35 lbs (minimum) and 50 lbs (maximum). The ballast may be sand in one to three sandbags separate from the base, sand in a sand-filled plastic base, or other ballasting devices as approved by the Engineer. Stacking of sandbags will be allowed, however height of sandbags above pavement surface may not exceed 12 inches.
2. Bases with built-in ballast shall weigh between 40 lbs. and 50 lbs. Built-in ballast can be constructed of an integral crumb rubber base or a solid rubber base.
3. The ballast shall not be heavy objects, water, or any material that would become hazardous to motorists, pedestrians, or workers when the drum is struck by a vehicle.
4. When used in regions susceptible to freezing, drums shall have drainage holes in the bottoms so that water will not collect and freeze becoming a hazard when struck by a vehicle.
5. Ballast shall not be placed on top of drums.
6. Adhesives may be used to secure base of drums to pavement.

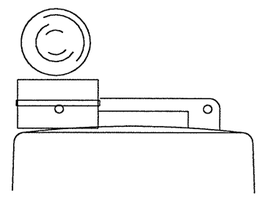

Type C Warning Light or approved substitute mounted adjacent to the travel way.

WARNING LIGHTS AND DELINEATORS MOUNTED ON PLASTIC DRUMS

1. Type A flashing warning lights are intended to warn drivers that they are approaching or are in a potentially hazardous area.
2. Type A flashing warning lights are not intended for delineation and shall not be used in a series.
3. Type C steady-burn warning lights are intended to be used in a series to delineate the edge of the travel lane on detours, on lane changes, on lane closures, and on other similar conditions.
4. Type A and Type C warning lights shall be installed at locations as detailed on other sheets in the plans.
5. Warning lights shall not be installed on a drum that has a sign, chevron or vertical panel.
6. Type A Class 1, Type A Class 2, or Type B Reflector Units (D & OM Standard) may be attached to drums to delineate the intended vehicular path. The color of the reflector unit shall correspond to the pavement marking it is supplementing or for which it is substituting (left edgeline-yellow or right edgeline-white). The reflective unit shall be attached to the handle of the drum using the mounting hole nearest the travel lane and shall be aligned perpendicular to approaching traffic.
7. Delineators may be used as directed by the Engineer. Delineators may not be used as a substitute for warning lights.

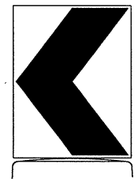

18" x 24" Sign
(Maximum Sign Dimension)
Chevron CW1-8, Driveway sign D70a, Keep Right R4 series or other signs as approved by Engineer

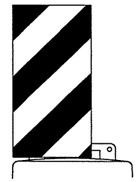

12" x 24"
Vertical Panel
mount with diagonals sloping down towards travel way

Plywood, Aluminum or Metal sign substrates shall NOT be used on plastic drums

SIGNS, CHEVRONS, AND VERTICAL PANELS MOUNTED ON PLASTIC DRUMS

1. Signs used on plastic drums shall be manufactured using substrates listed on the CWZTCD.
2. Chevrons and other work zone signs with an orange background shall be manufactured with Type E (Fluorescent Prismatic) sheeting meeting the color and retroreflectivity requirements of DMS-8300, "Flat Surface Reflective Sheeting," unless otherwise specified in the plans.
3. Vertical Panels shall be manufactured with orange and white sheeting meeting the requirements of DMS-8300 Type C (High Specific Intensity). Diagonal stripes on Vertical Panels shall slope down toward the intended traveled lane.
4. Other sign messages (text or symbolic) may be used as approved by the Engineer. Sign dimensions shall not exceed 18 inches in width or 24 inches in height.
5. Signs shall be installed using a 1/2 inch bolt (nominal) and nut, two washers, and one locking washer for each connection.
6. Mounting bolts and nuts shall be fully engaged and adequately torqued. Bolts should not extend more than 1/2 inch beyond nuts.

WARNING REFLECTORS MOUNTED ON PLASTIC DRUMS AS A SUBSTITUTE FOR TYPE C WARNING LIGHTS

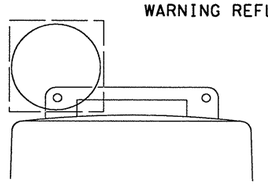

Warning reflector may be round or square.
Must have a reflective surface area of at least 30 square inches

1. A warning reflector or approved substitute may be mounted on a plastic drum as a substitute for a Type C, steady burn warning light at the discretion of the Contractor unless otherwise noted in the plans.
2. The warning reflector shall be manufactured using a sign substrate approved for use with plastic drums listed on the CWZTCD.
3. The warning reflector shall have a minimum retroreflective surface area (one-side) of 30 square inches.
4. Round reflectors shall be fully reflectorized, including the area where attached to the drum.
5. Square substrates must have a minimum of 30 square inches of reflectorized sheeting. They do not have to be reflectorized where it attaches to the drum.
6. The side of the warning reflector facing approaching traffic shall have sheeting meeting the color and retroreflectivity requirements for DMS 8300-Type D (Non-fluorescent Prismatic).
7. When used near two-way traffic, both sides of the warning reflector shall be reflectorized.
8. The warning reflector should be mounted on the side of the handle nearest approaching traffic.

TYPICAL DETAIL OF LANE CLOSURE USING PLASTIC DRUMS AS CHANNELIZING DEVICES

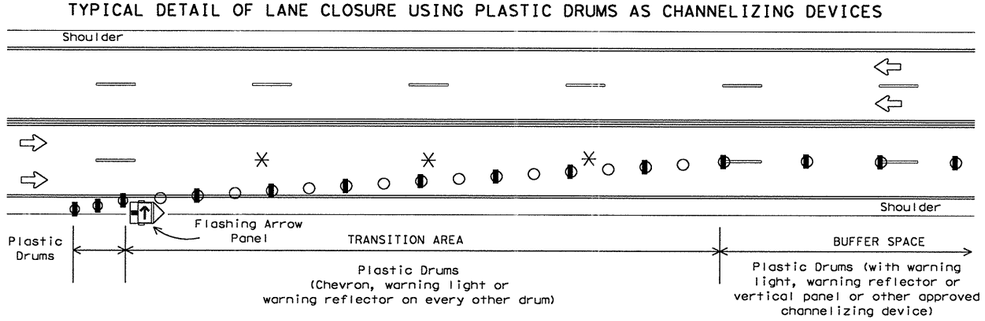

Provide adequate sight distance when placing lane closures. Do not place lane closures in vertical or horizontal curves.
See BC(8) for table showing the spacing of channelizing devices in the taper and tangent section.

✳ NOTE: Lane lines shall be removed when the lane closure occupies a location for longer than 2 weeks.

Only pre-qualified products shall be used. A copy of the "Compliant Work Zone Traffic Control Devices List" (CWZTCD) describes pre-qualified products and their sources and may be obtained by contacting:

Standards Engineer
Traffic Operations Division - TE
Texas Department of Transportation
125 East 11th Street
Austin, Texas 78701-2483
Phone (512) 416-3120
Fax (512) 416-3299

Instructions to locate the "CWZTCD" on TxDOT website are:

Start at website - www.dot.state.tx.us
Click on "About TxDOT",
Click on "Functional Organizational Chart",
Click on Traffic Operations Box,
Click on "Compliant Work Zone Traffic Control Devices",
again click on "Compliant Work Zone Traffic Control Devices".
This site is printable.

4/03 Revision

⚠1 Revised note

STANDARD PLANS
Texas Department of Transportation
Traffic Operations Division

BARRICADE AND CONSTRUCTION PLASTIC DRUM STANDARD

7 of 12 BC(7)-03

© TxDOT 11-4-02	DN: BAS	CK: GRB	DW: FDN	CK: CAL
REVISIONS 4-03	STATE DISTRICT	FEDERAL REGION	FEDERAL AID PROJECT	SHEET
	AUS	6	CC 337-1-29	49

COUNTY	CONTROL	SECTION	JOB	HIGHWAY
WILLIAMSON	0337	01	029	SH 29

...\txdot standards\tcp\bc03.dgn 09/21/2004 11:19:38 AM

CHANNELIZING DEVICES

VERTICAL PANELS

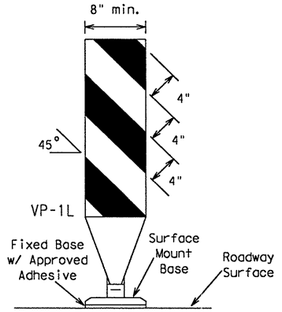

FIXED

(Rigid or self-righting)

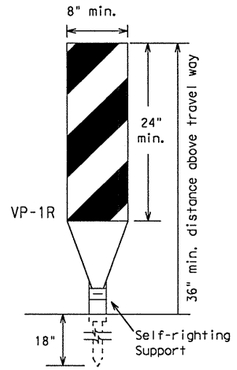

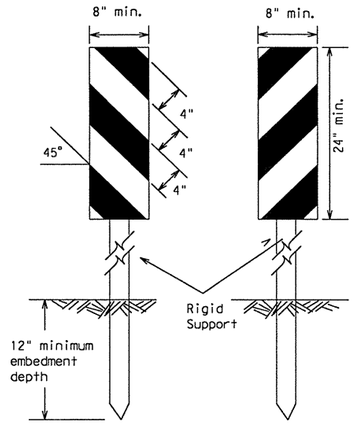

DRIVEABLE

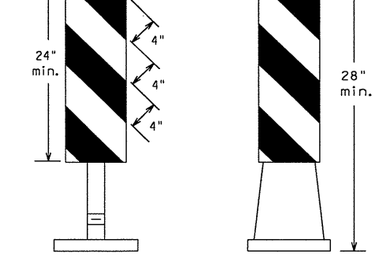

(Rigid or self-righting)

PORTABLE

1. Vertical Panels (VP's) are normally used to channelize traffic or divide opposing lanes of traffic.
2. VP's may be used in daytime or nighttime situations. They may be used at the edge of shoulder drop-offs and other areas such as lane transitions where positive daytime and nighttime delineation is required. The Engineer/Inspector shall refer to the Roadway Design Manual Appendix B "Treatment of Pavement Drop-offs in Work Zones" for additional guidelines on the use of VP's for drop-offs.
3. VP's should be mounted back to back if used at the edge of cuts adjacent to two-way two lane roadways. Stripes are to be reflective orange and reflective white and should always slope downward toward the travel lane.
4. VP's used on expressways, freeways, and on high speed roadways shall have a minimum of 2 square feet of retroreflective area facing traffic.
5. Self-righting supports are available with portable base. See "Compliant Work Zone Traffic Control Devices List" (CWZTCD).
6. Sheeting for the VP's shall be retroreflective Type C (High Specific Intensity) conforming to Departmental Material Specification DMS-8300, unless noted otherwise.

CHEVRONS

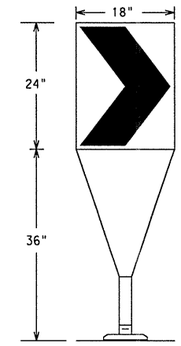

Fixed Base w/ Approved Adhesive
(Driveable Base, or Flexible Support can be used)

1. The chevron shall be a vertical rectangle with a minimum size of 12 by 18 inches.
2. Chevrons are intended to give notice of a sharp change of alignment with the direction of travel and provide additional emphasis and guidance for vehicle operators with regard to changes in horizontal alignment of the roadway.
3. Chevrons, when used, shall be erected on the outside of a sharp curve or turn, or on the far side of an intersection. They shall be in line with and at right angles to approaching traffic. Spacing should be such that the motorist always has three in view, until the change in alignment eliminates its need.
4. To be effective, the chevron should be visible for at least 500 feet.
5. Chevrons shall be orange with a black non-reflective legend. Sheeting for the chevron shall be retroreflective Type E (Fluorescent Prismatic) conforming to Departmental Material Specification DMS-8300, unless noted otherwise. The legend shall be black vinyl non-reflective decal sheeting meeting the requirements of DMS-8320.

Posted Speed	Formula	Minimum Desirable Taper Lengths ✳✳ 10' Offset	11' Offset	12' Offset	Suggested Maximum Spacing of Channelizing Devices On a Taper	On a Tangent
30	$L=\frac{WS^2}{60}$	150'	165'	180'	30'	60'-75'
35		205'	225'	245'	35'	70'-90'
40		265'	295'	320'	40'	80'-100'
45		450'	495'	540'	45'	90'-110'
50		500'	550'	600'	50'	100'-125'
55	L=WS	550'	605'	660'	55'	110'-140'
60		600'	660'	720'	60'	120'-150'
65		650'	715'	780'	65'	130'-165'
70		700'	770'	840'	70'	140'-175'
75		750'	825'	900'	75'	150'-185'

✳✳Taper lengths have been rounded off.
L=Length of Taper (FT.) W=Width of Offset (FT.) S=Posted Speed (MPH)

GENERAL NOTES:

1. Work Zone channelizing devices illustrated on this sheet may be installed in close proximity to traffic and are suitable for use on high or low speed roadways. The Engineer/Inspector shall ensure that spacing and placement is uniform and in accordance with the "Texas Manual on Uniform Traffic Control Devices" (TMUTCD).
2. Channelizing devices shown on this sheet may have a driveable, fixed or portable base. The requirement for self-righting channelizing devices must be specified in the General Notes or other plan sheets.
3. Channelizing devices on self-righting supports should be used in work zone areas where channelizing devices are frequently impacted by errant vehicles or vehicle related wind gusts making alignment of the channelizing devices difficult to maintain. Locations of these devices shall be detailed elsewhere in the plans. These devices shall conform to the TMUTCD and the "Compliant Work Zone Traffic Control Devices List" (CWZTCD).
4. The contractor shall maintain devices in a clean condition and replace damaged, non-reflective, faded, or broken devices and bases as required by the Engineer/Inspector. The Contractor shall be required to maintain proper device spacing and alignment.
5. Portable bases shall be fabricated from virgin and/or recycled rubber. The portable bases shall weigh approximately 35 lbs.
6. Pavement surfaces shall be prepared in a manner that ensures proper bonding between the adhesives, the fixed mount bases and the pavement surface. Adhesives shall be prepared and applied according to the manufacturer's recommendations.
7. The installation and removal of channelizing devices shall not cause detrimental effects to the final pavement surfaces, including pavement surface discoloration or surface integrity. Driveable bases shall not be permitted on final pavement surfaces. The Engineer/Inspector shall approve all application and removal procedures of fixed bases.
8. Examples on this sheet are the most commonly used channelizing devices in work zones. For other devices, refer to the CWZTCD.

Only pre-qualified products shall be used. A copy of the "Compliant Work Zone Traffic Control Devices List" (CWZTCD) describes pre-qualified products and their sources and may be obtained by contacting:

Standards Engineer
Traffic Operations Division - TE
Texas Department of Transportation
125 East 11th Street
Austin, Texas 78701-2483
Phone (512) 416-3120
Fax (512) 416-3299

Instructions to locate the "CWZTCD" on TxDOT website are:

Start at website - www.dot.state.tx.us
Click on "About TxDOT",
Click on "Functional Organizational Chart",
Click on Traffic Operations Box,
Click on "Compliant Work Zone Traffic Control Devices",
again click on "Compliant Work Zone Traffic Control Devices".
This site is printable.

OPPOSING TRAFFIC LANE DIVIDERS (OTLD)

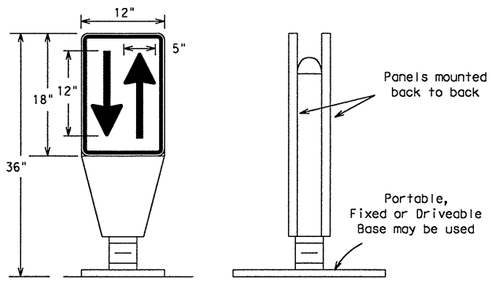

1. Opposing Traffic Lane Dividers (OTLD) are delineation devices designed to convert a normal one-way roadway section to two-way operation. OTLD's are used on temporary centerlines. The upward and downward arrows on the sign's face indicate the direction of traffic on either side of the divider. The base is secured to the pavement with an adhesive or rubber weight to minimize movement caused by a vehicle impact or wind gust. The OTLD is placed on a flexible self-righting support that returns to an upright position when impacted by a vehicle.
2. The OTLD may be used in combination with simple tubular markers or vertical panels (vp's).
3. Spacing between the OTLD shall not exceed 500 feet. Tubular markers or vp's placed between the OTLD's should not exceed 100 foot spacing.
4. The OTLD shall be orange with a black non-reflective legend. Sheeting for the OTLD shall be retroreflective Type E (Fluorescent Prismatic) conforming to Departmental Material Specification DMS-8300, unless noted otherwise. The legend shall be black vinyl non-reflective decal sheeting meeting the requirements of DMS-8320.

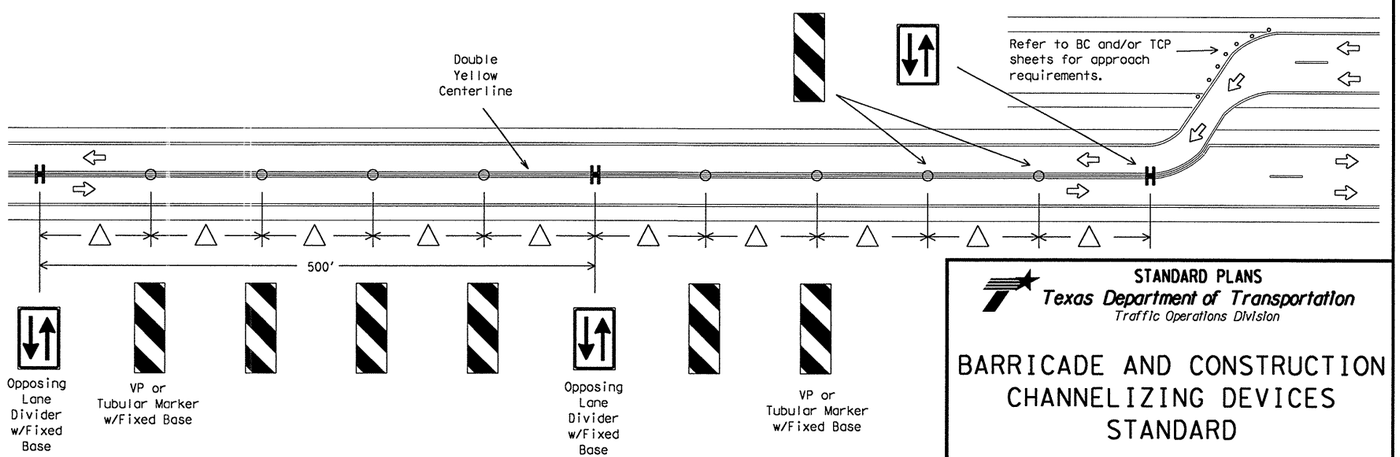

△ Spacing between the VP's or tubular markers shall not exceed 100 feet. On roadways with speeds less than 45 MPH, spacing between the tubular markers or VP's shall be as shown on the channelizing spacing table shown on this page. If the table shows spacing greater than 100 feet based on the roadway speed, then use a maximum of 100 feet spacing between the tubular markers or VP's. Every fifth channelizing device shall be an OTLD. Spacing between the OTLD shall not exceed 500 feet. When using this type of traffic control set-up, the OTLD, VP's or tubular markers shall have the fixed base with approved adhesive per the manufacturer's recommendations.

STANDARD PLANS
Texas Department of Transportation
Traffic Operations Division

BARRICADE AND CONSTRUCTION CHANNELIZING DEVICES STANDARD

8 of 12 BC(8)-03

©TxDOT 11-4-02

DN: - BAS	CK: - GRB	DW: - FDN	CK: - CAL

REVISIONS	STATE DISTRICT	FEDERAL REGION	FEDERAL AID PROJECT	SHEET
	AUS	6	CC 337-1-29	50

COUNTY	CONTROL	SECTION	JOB	HIGHWAY
WILLIAMSON	0337	01	029	SH 29

...\txdot standards\tcp\bc03.dgn 09/21/2004 11:19:38 AM

TYPE III BARRICADES

1. Refer to the Compliant Work Zone Traffic Control Devices List (CWZTCD) for details of the Type III Barricades and a list of all materials used in the construction of Type III Baricades.
2. Type III Barricades shall be used at each end of construction projects closed to all traffic.
3. Barricades extending across a roadway should have stripes that slope downward in the direction toward which traffic must turn in detouring. When both right and left turns are provided, the chevron striping may slope downward in both directions from the center of the barricade.
4. Striping of rails, for the right side of the roadway, should slope downward to the left. For the left side of the roadway, striping should slope downward to the right.
5. Identification markings may be shown only on the back of the barricade rails. The maximum height of letters and/or company logos used for identification shall be 1".
6. Barricades shall not be placed parallel to traffic unless an adequate clear zone is provided.
7. Warning lights shall NOT be installed on barricades.
8. Where barricades require the use of weights to keep from turning over, the use of sandbags with dry, cohesionless sand is recommended. The sandbags will be tied shut to keep the sand from spilling and to maintain a constant weight. Rock, concrete, iron, steel or other solid objects will NOT be permitted. Sandbags should weigh a minimum of 35 lbs and a maximum of 50 lbs. Sandbags shall be made of a durable material that tears upon vehicular impact. Rubber (such as tire inner tubes) shall not be used for sandbags. Sandbags shall only be placed along or upon the base supports of the device and shall not be suspended above ground level or hung with rope, wire, chains or other fasteners.

Barricades shall NOT be used as a sign support.

TYPICAL STRIPING DETAIL FOR BARRICADE RAIL

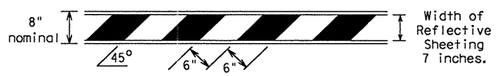

TYPICAL PANEL DETAIL FOR SKID OR POST TYPE BARRICADES

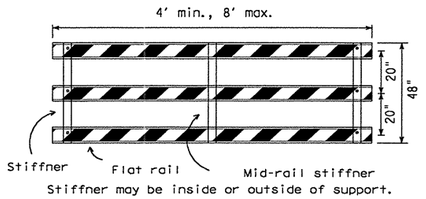

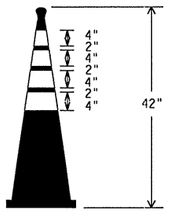

EDGELINE CHANNELIZER

1. This device is intended only for use in place of a vertical panel to channelize traffic by indicating the edge of the travel lane.
2. This device shall not be used to separate lanes of traffic (opposing or otherwise) or warn of objects.
3. This device is based on a 42 inch, two-piece cone with an alternate striping pattern: four 4 inch retroreflective bands, with an approximate 2 inch gap between bands. The color of the band should correspond to the color of the edgeline (yellow for left edgeline, white for right edgeline) for which the device is substituted or for which it supplements. The reflectorized bands shall be retroreflective Type C (High Specific Intensity) conforming to Departmental Material Specification DMS-8300, unless otherwise noted.
4. The base must weigh a minimum of 30 lbs.

TYPE III BARRICADE (POST AND SKID) TYPICAL APPLICATION

Each roadway of a divided highway shall be barricaded in the same manner.

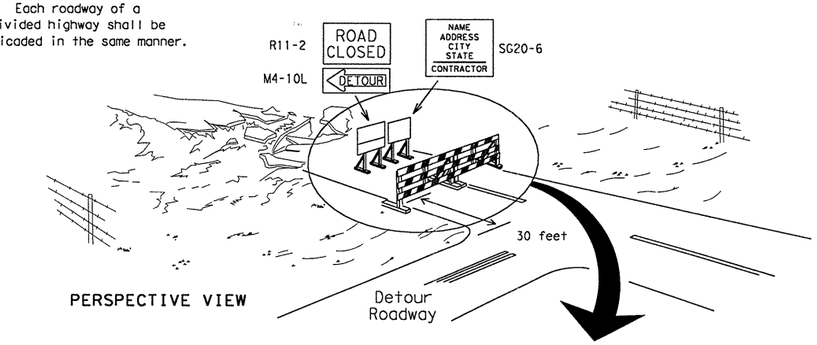

PERSPECTIVE VIEW

The three rails on Type III barricades shall be reflectorized orange and reflective white stripes on one side facing one-way traffic and both sides for two-way traffic.
Barricade striping should slant downward in the direction of detour.

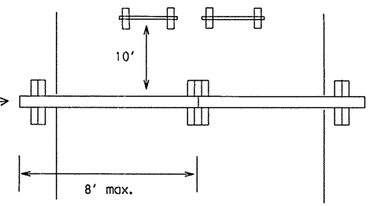

PLAN VIEW

1. Signs should be mounted on independent supports at a 7 foot mounting height in center of roadway. The signs should be a minimum of 10 feet behind Type III Barricades.
2. Advance signing shall be as specified elsewhere in the plans.

CULVERT WIDENING OR OTHER ISOLATED WORK WITHIN THE PROJECT LIMITS

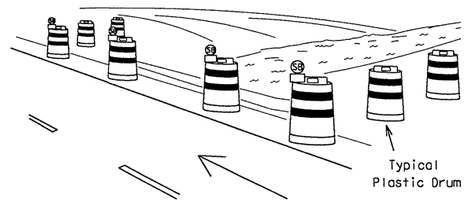

PERSPECTIVE VIEW

1. Where positive redirectional capability is provided, drums may be omitted.
2. Plastic construction fencing may be used with drums for safety as required in the plans.
3. Vertical Panels on flexible support may be substituted for drums when the shoulder width is less than 4 feet.
4. When the shoulder width is greater than 12 feet, steady-burn lights may be omitted if drums are used.
5. Drums must extend the length of the culvert widening.

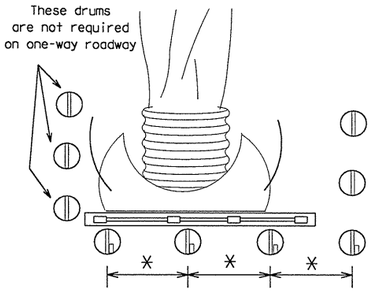

PLAN VIEW

Legend

- Plastic drum
- Plastic drum with steady burn light

Only pre-qualified products shall be used. A copy of the "Compliant Work Zone Traffic Control Devices List" (CWZTCD) describes pre-qualified products and their sources and may be obtained by contacting:

Standards Engineer
Traffic Operations Division - TE
Texas Department of Transportation
125 East 11th Street
Austin, Texas 78701-2483
Phone (512) 416-3120
Fax (512) 416-3299

Instructions to locate the "CWZTCD" on TxDOT website are:

Start at website - www.dot.state.tx.us
Click on "About TxDOT",
Click on "Functional Organizational Chart",
Click on Traffic Operations Box,
Click on "Compliant Work Zone Traffic Control Devices",
again click on "Compliant Work Zone Traffic Control Devices".
This site is printable.

CONES

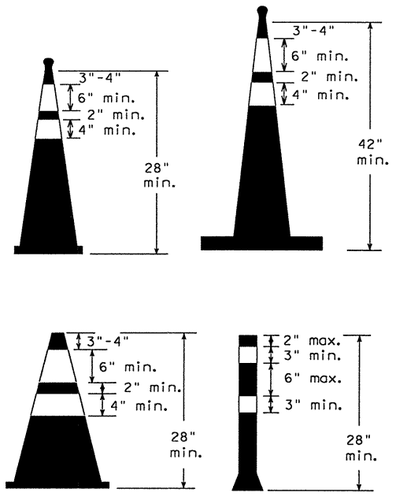

28" Cones shall have a minimum weight of 9 1/2 lbs.

42" 2-piece cones shall have a minimum weight of 30 lbs.

1. Traffic cones and tubular markers shall be a minimum of 28 inches in height when used either on freeways or at nighttime.
2. Cones or tubular markers shall be predominantly orange, fluorescent red-orange, or fluorescent yellow-orange. They should be kept clean and bright for maximum visibility.
3. Cones used only for daytime operations do not require the reflectorized bands.
4. Cones used for nighttime operations shall be reflectorized. Reflectorized material shall have a smooth, sealed outer surface that displays the same approximate color during the day and night. The reflectorized bands shall be retroreflective Type C (High Specific Intensity) conforming to Departmental Material Specification DMS-8300, unless otherwise noted.
5. When used at night, appropriate personnel shall ensure that cones and tubular markers remain in their proper location and in an upright position.
6. Reflectorization of cones shall consist of a minimum 6 inch band placed at least 3 inches but not more than 4 inches from the top, supplemented by a minimum 4 inch band spaced a minimum of 2 inches below the 6 inch band.
7. Reflectorization of tubular markers shall be a minimum of two 3 inch bands placed a maximum of 2 inches from the top with a maximum of 6 inches between bands. The reflectorized bands shall be retroreflective Type C (High Specific Intensity) conforming to Departmental Material Specification DMS-8300, unless otherwise noted.
8. One-piece cones or tubular markers are generally suitable for temporary usage (up to 8 hours) with other channelization devices such as vertical panels, drums or two-piece cones for long term usage. Care should be taken to ensure they remain in their proper location and in an upright position.
9. Cones or tubular markers used on each project shall be of the same size and shape.
10. The handle may be designed as a hook or other shape, fabricated from non-rigid materials similar to the cone material, and may extend up to a maximum of 8 inches above the top of cone. Length of the handle shall not be considered with regard to the overall height of the cone.

STANDARD PLANS
Texas Department of Transportation
Traffic Operations Division

BARRICADE AND CONSTRUCTION TYPE III BARRICADE & CONES STANDARD

9 of 12 BC(9)-03

© TxDOT 11-4-02	DN: - BAS	CK: - GRB	DW: - FDN	CK: - CAL

REVISIONS	STATE DISTRICT	FEDERAL REGION	FEDERAL AID PROJECT	SHEET
	AUS	6	CC 337-1-29	51

COUNTY	CONTROL	SECTION	JOB	HIGHWAY
WILLIAMSON	0337	01	029	SH 29

...\txdot standards\tcp\bc03.dgn 09/21/2004 11:19:37 AM

WORK ZONE PAVEMENT MARKINGS

GENERAL

1. The Contractor shall be responsible for maintaining work zone and existing pavement markings, in accordance with the standard specifications and special provisions, on all roadways open to traffic within the CSJ limits unless otherwise stated in the plans.
2. Color, patterns and dimensions shall be in conformance with the "Texas Manual on Uniform Traffic Control Devices" (TMUTCD).
3. Additional supplemental pavement marking details may be found in the plans or specifications.
4. Pavement markings shall be installed in accordance with the TMUTCD and as shown on the plans.
5. When short term markings are required on the plans, short term markings shall conform with the TMUTCD, the plans and details as shown on the Standard Plan Sheet WZ(STPM).
6. When standard pavement markings are not in place and the roadway is opened to traffic, DO NOT PASS signs shall be erected to mark the beginning of the sections where passing is prohibited and the sections where passing is permitted.
7. All work zone pavement markings shall be installed in accordance with Item 662, "Work Zone Pavement Markings."

RAISED PAVEMENT MARKERS

1. Raised pavement markers are to be placed according to the patterns on BC(11).
2. All raised pavement markers used for work zone markings shall meet the requirements of Item 672, "RAISED PAVEMENT MARKERS" and Departmental Material Specification DMS-4200 or DMS-4300.
3. A list of prequalified reflective raised pavement markers can be found at the following web site:
   ftp://ftp.dot.state.tx.us/pub/txdot-info/gsd/pdf/dms4200preq.pdf
4. A list of prequalified non-reflective traffic buttons can be found at the following web site:
   ftp://ftp.dot.state.tx.us/pub/txdot-info/gsd/pdf/4300preq.pdf

PREFABRICATED PAVEMENT MARKINGS

1. Removable prefabricated pavement markings shall meet the requirements of DMS-8241. A list of prequalified products can be found at the following web site:
   ftp://ftp.dot.state.tx.us/pub/txdot-info/gsd/pdf/pavemark.pdf
2. Non-removable prefabricated pavement markings (foil back) shall meet the requirements of DMS-8240 or the TXDOT Purchase Specification No. 550-74-89. A list of prequalified products and a copy of the TXDOT Purchase Specifications can be found at web sites:
   ftp://ftp.dot.state.tx.us/pub/txdot-info/gsd/pdf/pavement.pdf
   ftp://ftp.dot.state.tx.us/pub/txdot-info/gsd/pdf/tss/tss377.pdf

MAINTAINING WORK ZONE PAVEMENT MARKINGS

1. The Contractor will be responsible for maintaining work zone pavement markings within the work limits.
2. Work zone pavement markings shall be inspected in accordance with the frequency and reporting requirements of work zone traffic control device inspections as required by Form 599.
3. The markings should provide a visible reference for a minimum distance of 300 feet during normal daylight hours and 150 feet when illuminated by automobile low-beam headlights at night, unless sight distance is restricted by roadway geometrics.
4. Markings failing to meet this criteria shall be replaced as required by the Engineer at the expense of the Contractor.

REMOVAL OF PAVEMENT MARKINGS

1. Pavement markings that are no longer applicable, could create confusion or direct a motorist toward or into the closed portion of the roadway, shall be removed or obliterated before the roadway is opened to traffic.
2. The above shall not apply to detours in place for less than two weeks, where flaggers and/or sufficient channelizing devices are used in lieu of markings to outline the detour route.
3. Pavement markings shall be removed to the fullest extent possible, so as not to leave a discernible marking, by any method that does not materially damage the surface or texture of the pavement.
4. The removal of pavement markings may require resurfacing or seal coating portions of the roadway.
5. Subject to the approval of the Engineer, any method that proves to be successful on a particular type pavement may be used.
6. Blast cleaning may be used but will not be required unless specifically shown in the plans.
7. Over-painting of the markings SHALL NOT BE permitted.
8. Removal of raised pavement markers shall be as directed by the Engineer.
9. Removal of existing pavement markings and markers will be paid for directly in accordance with Item 677, "ELIMINATING EXISTING PAVEMENT MARKINGS AND MARKERS," unless otherwise stated in the plans.

Temporary Flexible-Reflective Roadway Marker Tabs

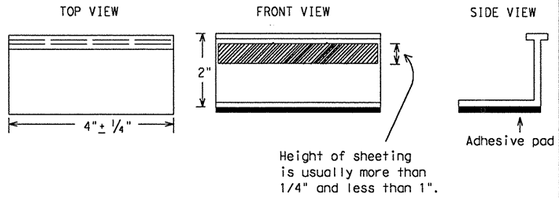

STAPLES OR NAILS SHALL NOT BE USED TO SECURE TEMPORARY FLEXIBLE-REFLECTIVE ROADWAY MARKER TABS TO THE PAVEMENT SURFACE

1. Temporary flexible-reflective roadway marker tabs used as guidemarks shall meet the requirements of DMS-8242.
2. Tabs detailed on this sheet are to be inspected and accepted by the Engineer or designated representative. Sampling and testing is not normally required, however at the option of the Engineer, either "A" or "B" below may be imposed to assure quality before placement on the roadway.
   A. Select five (5) or more tabs at random from each lot or shipment and submit to the Construction Division, Materials and Pavement Section to determine specification compliance.
   B. Select five (5) tabs and perform the following test. Affix five (5) tabs at 24 inch intervals on an asphaltic pavement in a straight line. Using a medium size passenger vehicle or pickup, run over the markers with the front and rear tires at a speed of 35 to 40 miles per hour, four (4) times in each direction. No more than one (1) out of the five (5) reflective surfaces shall be lost or displaced as a result of this test.
3. Small design variances may be noted between tab manufacturers.

Raised Pavement Markers used as Guidemarks

1. Raised pavement markers used as guidemarks shall be from the approved product list, and meet the requirements of DMS-4200.
2. All temporary construction raised pavement markers provided on a project shall be of the same manufacturer.
3. Adhesive for guidemarks shall be bituminous material hot applied or butyl rubber pad for all surfaces, or thermoplastic for concrete surfaces.

Guidemarks shall be designated as:
YELLOW - (two amber reflective surfaces with yellow body).
WHITE - (one silver reflective surface with white body).

DEPARTMENTAL MATERIAL SPECIFICATIONS

PAVEMENT MARKERS (REFLECTORIZED)	DMS-4200
TRAFFIC BUTTONS	DMS-4300
EPOXY AND ADHESIVES	DMS-6100
BITUMINOUS ADHESIVE FOR PAVEMENT MARKERS	DMS-6130
PREFABRICATED PAVEMENT MARKINGS-PERMANENT	DMS-8240
PREFABRICATED PAVEMENT MARKINGS-REMOVABLE	DMS-8241
TEMPORARY FLEXIBLE-REFLECTIVE ROADWAY MARKER TABS	DMS-8242

Only pre-qualified products shall be used. A copy of the "Compliant Work Zone Traffic Control Devices List" (CWZTCD) describes pre-qualified products and their sources and may be obtained by contacting:

Standards Engineer
Traffic Operations Division - TE
Texas Department of Transportation
125 East 11th Street
Austin, Texas 78701-2483
Phone (512) 416-3120
Fax (512) 416-3299

Instructions to locate the "CWZTCD" on TxDOT website are:

Start at website - www.dot.state.tx.us
Click on "About TxDOT",
Click on "Functional Organizational Chart",
Click on Traffic Operations Box,
Click on "Compliant Work Zone Traffic Control Devices",
again click on "Compliant Work Zone Traffic Control Devices".
This site is printable.

STANDARD PLANS
Texas Department of Transportation
Traffic Operations Division

BARRICADE AND CONSTRUCTION PAVEMENT MARKINGS STANDARD

10 of 12 BC(10)-03

©TxDOT February 1998

DN: - LR	CK: - DTN	DW: - FDN	CK: - CAL

REVISIONS	STATE DISTRICT	FEDERAL REGION	FEDERAL AID PROJECT				SHEET
1-97	AUS	6	CC 337-1-29				52
2-98	COUNTY		CONTROL	SECTION	JOB		HIGHWAY
1-02	WILLIAMSON		0337	01	029		SH 29
11-02							

...\txdot standards\tcp\bc03.dgn 09/21/2004 11:19:37 AM

PAVEMENT MARKING PATTERNS

CENTER LINE & NO-PASSING ZONE BARRIER LINES FOR TWO-LANE, TWO-WAY HIGHWAYS

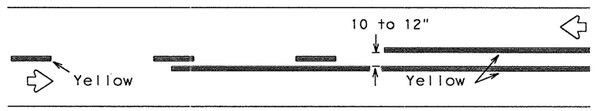

REFLECTORIZED PAVEMENT MARKINGS - PATTERN A

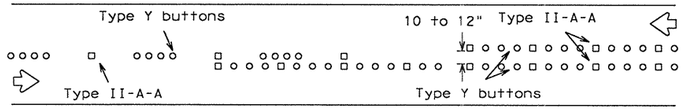

RAISED PAVEMENT MARKERS - PATTERN A

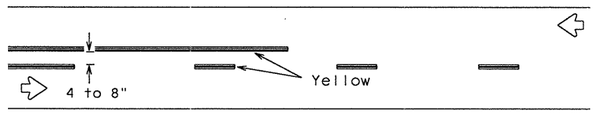

REFLECTORIZED PAVEMENT MARKINGS - PATTERN B

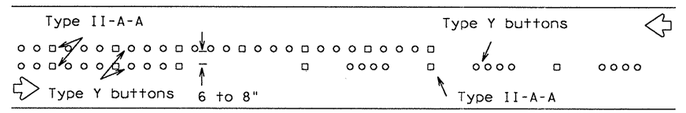

RAISED PAVEMENT MARKERS - PATTERN B

Pattern A is the TXDOT Standard, however Pattern B may be used if approved by the Engineer.
Prefabricated markings may be substituted for reflectorized pavement markings.

EDGE & LANE LINES FOR DIVIDED HIGHWAY

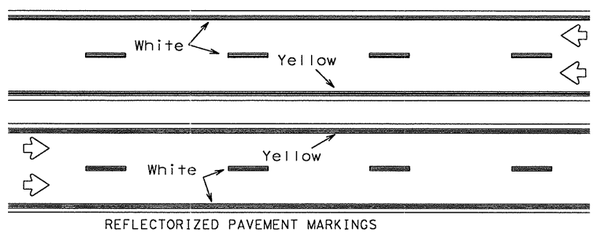

REFLECTORIZED PAVEMENT MARKINGS

Prefabricated markings may be substituted for reflectorized pavement markings.

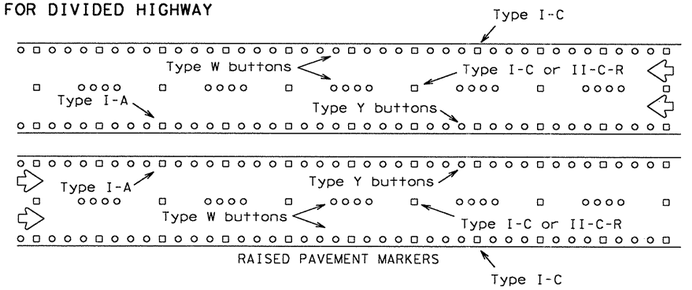

RAISED PAVEMENT MARKERS

LANE & CENTER LINES FOR MULTILANE UNDIVIDED HIGHWAYS

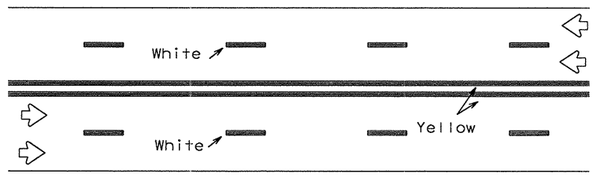

REFLECTORIZED PAVEMENT MARKINGS

Prefabricated markings may be substituted for reflectorized pavement markings.

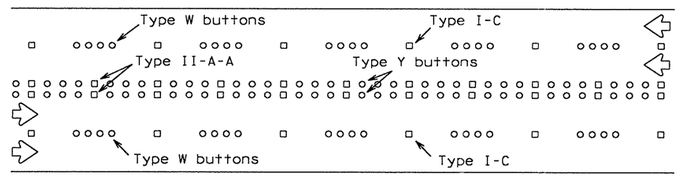

RAISED PAVEMENT MARKERS

TWO-WAY LEFT TURN LANE

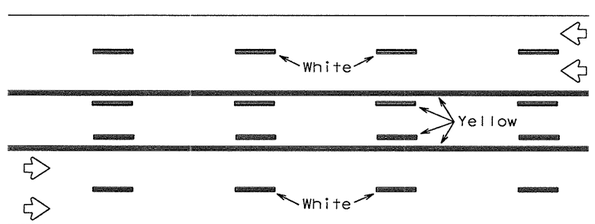

REFLECTORIZED PAVEMENT MARKINGS

Prefabricated markings may be substituted for reflectorized pavement markings.

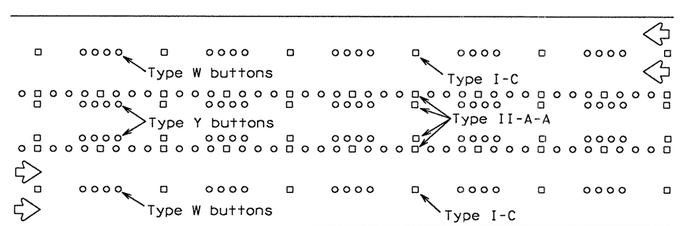

RAISED PAVEMENT MARKERS

STANDARD WORK ZONE PAVEMENT MARKINGS DETAILS

SOLID LINES

DOUBLE NO-PASSING LINE

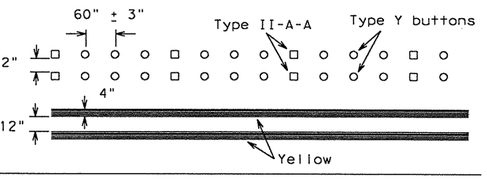

EDGE LINE OR SINGLE NO-PASSING LINE

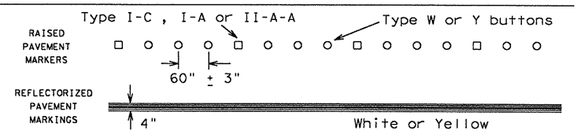

WIDE LINE

(FOR LEFT TURN CHANNELIZING LINE OR CHANNELIZING LINE USED TO DISCOURAGE LANE CHANGING.)

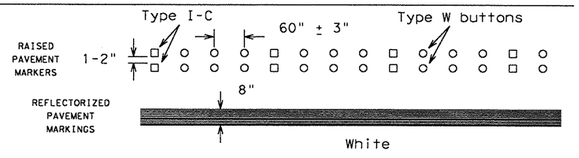

BROKEN LINE

(FOR CENTER LINE OR LANE LINE.)

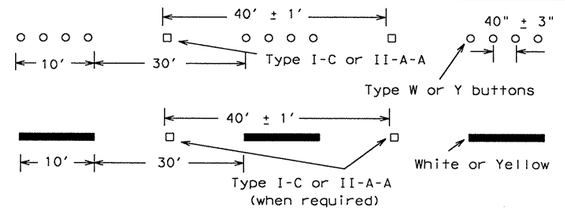

REMOVABLE MARKINGS WITH RAISED PAVEMENT MARKERS

If raised pavement markers are used to supplement REMOVABLE markings, the markers shall be applied to the top of the tape at the approximate mid length of tape used for broken lines or at 20 foot spacing for solid lines. This allows an easier removal of raised pavement markers and tape.

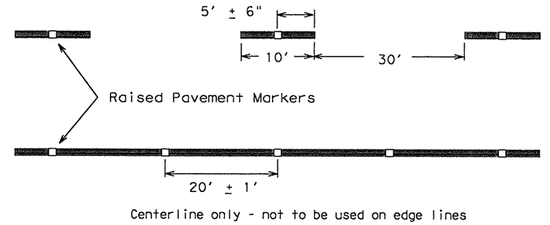

Centerline only - not to be used on edge lines

Only pre-qualified products shall be used. A copy of the "Compliant Work Zone Traffic Control Devices List" (CWZTCD) describes pre-qualified products and their sources and may be obtained by contacting:

Standards Engineer
Traffic Operations Division - TE
Texas Department of Transportation
125 East 11th Street
Austin, Texas 78701-2483
Phone (512) 416-3120
Fax (512) 416-3299

Instructions to locate the "CWZTCD" on TxDOT website are:

Start at website - www.dot.state.tx.us
Click on "About TxDOT",
Click on "Functional Organizational Chart",
Click on Traffic Operations Box,
Click on "Compliant Work Zone Traffic Control Devices",
again click on "Compliant Work Zone Traffic Control Devices".
This site is printable.

Raised pavement markers used as standard pavement markings shall be from the approved products list and meet the requirements of Item "RAISED PAVEMENT MARKERS."

STANDARD PLANS
Texas Department of Transportation
Traffic Operations Division

BARRICADE AND CONSTRUCTION PAVEMENT MARKING PATTERNS STANDARD

11 of 12 BC(11)-03

© TxDOT February 1998

DN: LR	CK: DTN	DW: FDN	CK: CAL

REVISIONS	STATE DISTRICT	FEDERAL REGION	FEDERAL AID PROJECT	SHEET
2-94	AUS	6	CC 337-1-29	53
1-97	COUNTY		CONTROL / SECTION / JOB	HIGHWAY
2-98	WILLIAMSON		0337 / 01 / 029	SH 29
11-02				

...\txdot standards\tcp\bc03.dgn 09/21/2004 11:19:38 AM

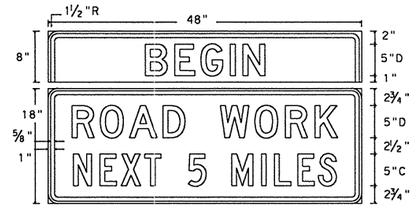

SG20-1 w/plaque
48" X 26"

Letters - Black
Numbers - Black
Border - Black
Background - Orange Refl.

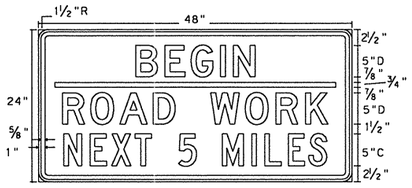

SG20-5T
48" X 24"

Letters - Black
Numbers - Black
Border - Black
Background - Orange Refl.

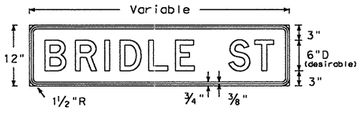

M4-9N
Variable X 12"

Letters - Black
Border - Black
Background - Orange Refl.

The M4-9R,L or S sign is to be used to detour local streets or roads that are not a State or Federal numbered highway; however, it should not be used in lieu of the M4-10 sign at the beginning of the detour or to detour State or Federal numbered routes.

Also, when the M4-9R,L or S sign is used, a sign (M4-9N) with the name of the street being detoured may be mounted above it.

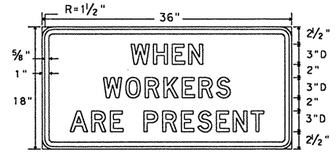

ER20-5
Plaque
36" X 18"

Letters - Black
Border - Black
Background - White Refl.

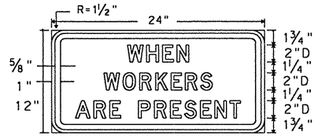

R20-5
Plaque
24" X 12"

Letters - Black
Border - Black
Background - White Refl.

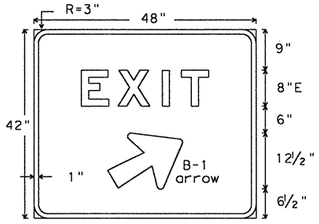

E5-1a
48" X 42"

Letters - White Refl.
Arrow - White Refl.
Border - White Refl.
Background - Green Refl.

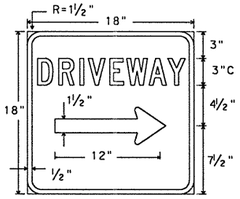

D-70a
18" X 18"

Letters - White Refl.
Symbol - White Refl.
Border - White Refl.
Background - Blue Refl.

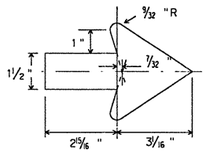

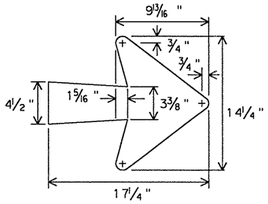

B-1 Arrow Detail

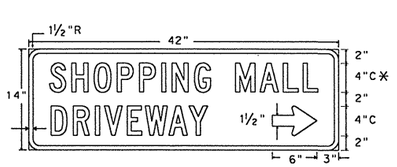

D-70S
42" X 14"

Letters - White Refl.
Symbol - White Refl.
Border - White Refl.
Background - Blue Refl.

* Alternate first line legend for D-70S

RESTAURANT	D70R 4"C
BUSINESS	D70B 4"C
MOTEL	D70M 4"C
GAS	D70G 4"C

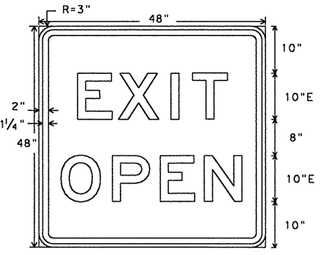

E5-2
48" X 48"

Letters - Black
Border - Black
Background - Orange Refl.

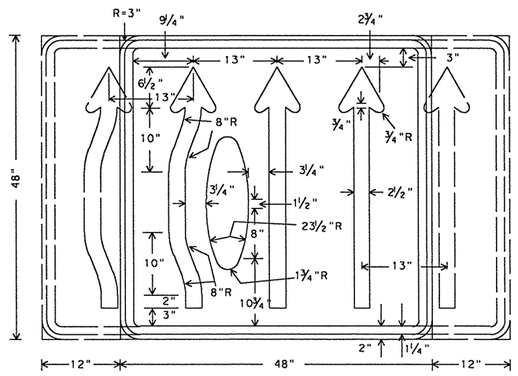

CW24-2
Var. X 48"

A mirror image may be used to show proper lane alignment.

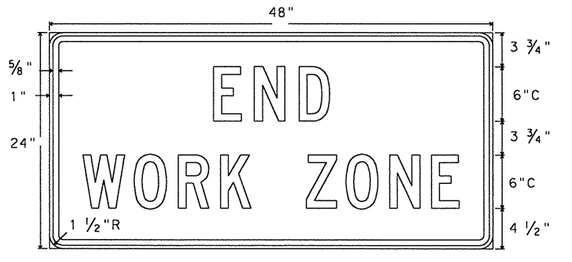

G20-2b
48" X 24"

Letters - Black
Border - Black
Background - Orange Refl.

Only pre-qualified products shall be used. A copy of the "Compliant Work Zone Traffic Control Devices List" (CWZTCD) describes pre-qualified products and their sources and may be obtained by contacting:

Standards Engineer
Traffic Operations Division - TE
Texas Department of Transportation
125 East 11th Street
Austin, Texas 78701-2483
Phone (512) 416-3120
Fax (512) 416-3299

Instructions to locate the "CWZTCD" on TxDOT website are:

Start at website - www.dot.state.tx.us
Click on "About TxDOT",
Click on "Functional Organizational Chart",
Click on Traffic Operations Box,
Click on "Compliant Work Zone Traffic Control Devices",
again click on "Compliant Work Zone Traffic Control Devices".
This site is printable.

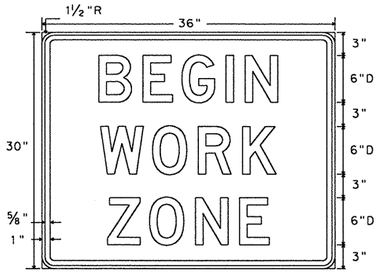

EG20-9T
36" X 30"

Letters - Black
Border - Black
Background - Orange Refl.

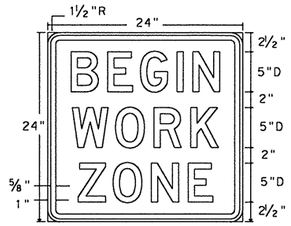

G20-9T
24" X 24"

Letters - Black
Border - Black
Background - Orange Refl.

DEPARTMENT MATERIAL SPECIFICATIONS

PLYWOOD SIGN BLANKS	DMS-7100
ALUMINUM SIGN BLANKS	DMS-7110
FLAT SURFACE REFLECTIVE SHEETING	DMS-8300
VINYL NON-REFLECTIVE DECAL SHEETING	DMS-8320

COLOR	USAGE	REFLECTIVE SHEETING OR OTHER MATERIAL
BLUE	BACKGROUND	TYPE C (HIGH SPECIFIC INTENSITY)
RED	BACKGROUND	TYPE C (HIGH SPECIFIC INTENSITY)
GREEN	BACKGROUND	TYPE C (HIGH SPECIFIC INTENSITY)
ORANGE	BACKGROUND	TYPE E (FLUORESCENT PRISMATIC)
WHITE	BACKGROUND	TYPE C (HIGH SPECIFIC INTENSITY)
YELLOW	BACKGROUND	TYPE C (HIGH SPECIFIC INTENSITY)
BLACK	LEGEND & BORDERS	VINYL NON-REFLECTIVE DECAL SHEETING
WHITE	LEGEND & BORDERS	TYPE C (HIGH SPECIFIC INTENSITY)

STANDARD PLANS
Texas Department of Transportation
Traffic Operations Division

BARRICADE AND CONSTRUCTION REGULATORY & GUIDE SIGNS STANDARDS

12 of 12 BC(12)-03

©TxDOT February 1998	DN: - GRB	CK: - BAS	DW: - FDN	CK: - CAL

REVISIONS	STATE DISTRICT	FEDERAL REGION	FEDERAL AID PROJECT				SHEET
10-99	AUS	6	CC 337-1-29				54
11-02	COUNTY		CONTROL	SECTION	JOB		HIGHWAY
	WILLIAMSON		0337	01	029		SH 29

...\txdot standards\tcp\bc03.dgn 09/21/2004 11:19:38 AM

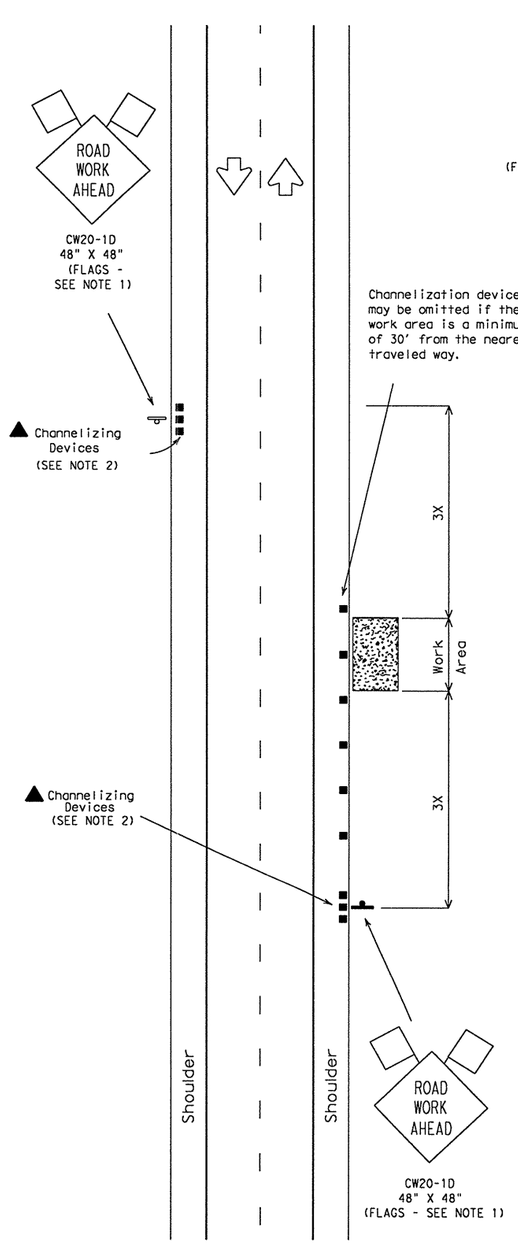

TCP (1-1a)

Work Area Near Shoulder

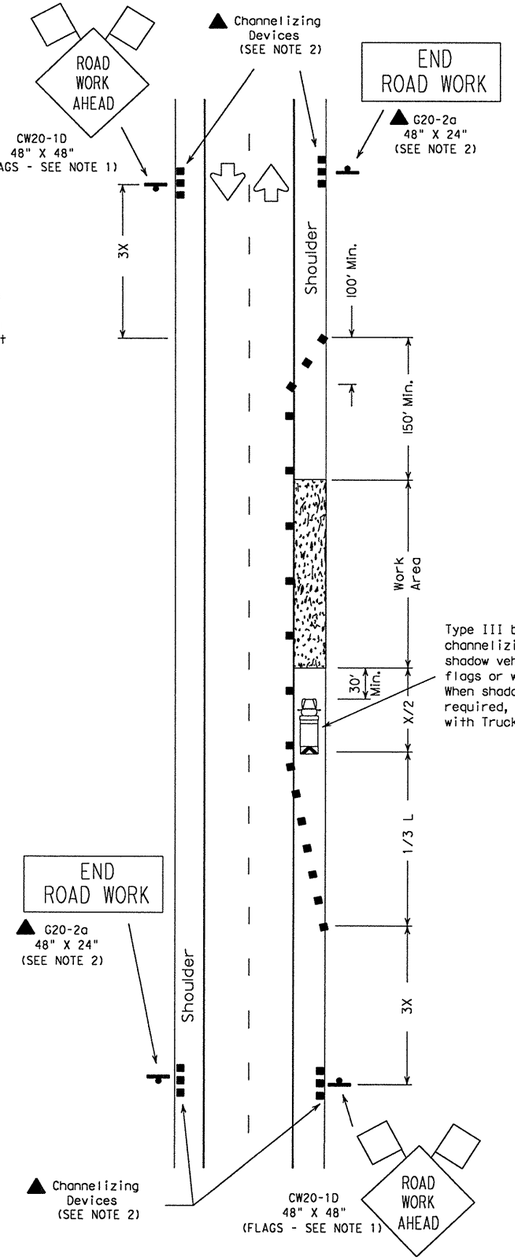

TCP (1-1b)

Work Area on Shoulder

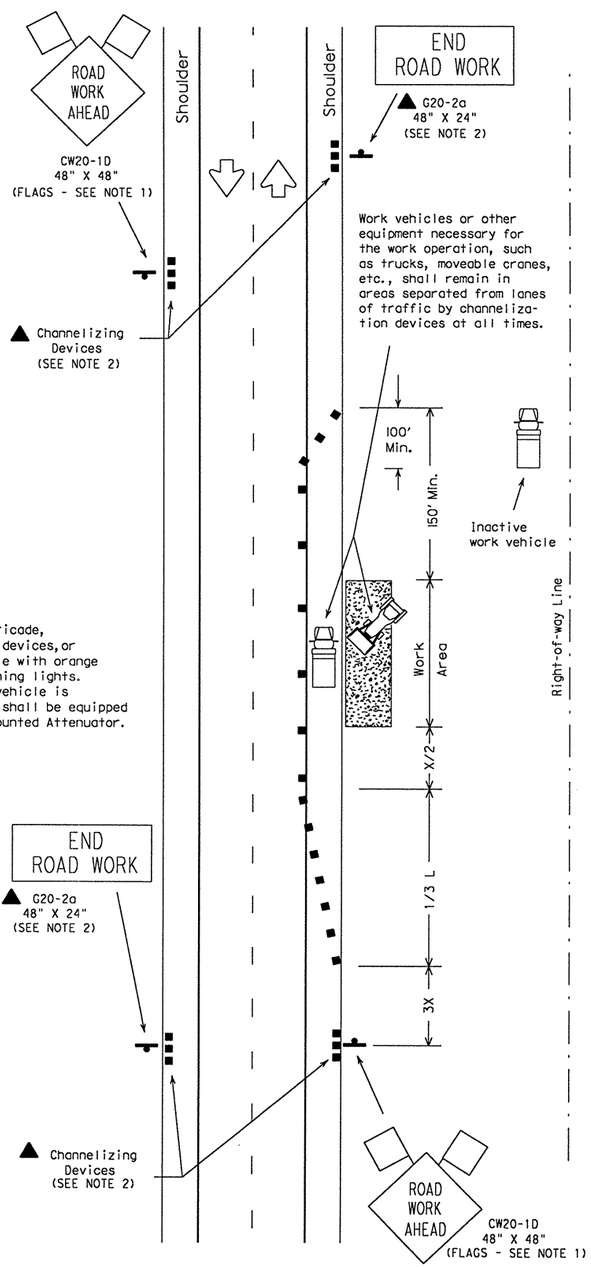

TCP (1-1c)

Work Vehicles on Shoulder

LEGEND

Type III Barricade ■ ■ Channelizing Devices Flag

Heavy Work Vehicle Truck Mounted Attenuator

Trailer Mounted Flashing Arrow Panel Portable Changeable Message Sign

Flagger Sign Post

Posted Speed ✳	Formula	Minimum Desirable Taper Lengths ✳✳ 10' Offset	11' Offset	12' Offset	Suggested Maximum Spacing of Device On a Taper	On a Tangent	Minimum Sign Spacing X Distance
30	$L=\frac{WS^2}{60}$	150'	165'	180'	30'	60'-75'	120'
35		205'	225'	245'	35'	70'-90'	160'
40		265'	295'	320'	40'	80'-100'	240'
45	L=WS	450'	495'	540'	45'	90'-110'	320'
50		500'	550'	600'	50'	100'-125'	400'
55		550'	605'	660'	55'	110'-140'	500'
60		600'	660'	720'	60'	120'-150'	✳600'
65		650'	715'	780'	65'	130'-165'	✳700'
70		700'	770'	840'	70'	140'-175'	✳800'

✳ Conventional Roads Only

✳✳ Taper lengths have been rounded off.
L=Length of Taper (FT.) W=Width of Offset (FT.) S=Posted Speed (MPH)

TYPICAL USAGE:				
MOBILE	SHORT DURATION	SHORT TERM STATIONARY	INTERMEDIATE TERM STATIONARY	LONG TERM STATIONARY
	✓	✓		

GENERAL NOTES:

1. Unless otherwise stated in the plans, flags attached to signs are REQUIRED.
2. All traffic control devices illustrated are REQUIRED, except those denoted with the triangle symbol may be omitted when stated elsewhere in the plans.
3. On high speed facilities advance warning signs should be installed approximately 3X from the work area or from the beginning of a lane or shoulder taper. On low speed facilities the advance warning signs should be placed based on the "X" minimum distance.
4. Inactive work vehicles or other equipment should be parked near the right-of-way line and not parked on the paved shoulder.

Only pre-qualified products shall be used. A list of compliant products and their sources may be obtained by writing or faxing:

Standards Engineer
Traffic Operations Division - TE
Texas Department of Transportation
125 East 11th Street
Austin, Texas 78701-2483
Phone (512) 416-3335
Fax (512) 416-3161
E-mail TRF-STANDARD@mailgw.dot.state.tx.us

The requirement for shadow vehicles will be listed in the project GENERAL NOTES, Item 502, Barricades, Signs and Traffic Handling.

STANDARD PLANS
TEXAS DEPARTMENT OF TRANSPORTATION
Traffic Operations Division

TRAFFIC CONTROL PLAN

TCP(1-1)-98

©TxDOT December 1985 DW: LR CK: MT DW: DN CK: MT NEG NO.:

REVISIONS	STATE DISTRICT	FEDERAL REGION	FEDERAL AID PROJECT				SHEET
2-94 8-95 1-97 4-98	AUS	6	CC 337-1-29				55
	COUNTY		CONTROL	SECTION	JOB		HIGHWAY
	WILLIAMSON		0337	01	029		SH 29

...\txdot standards\tcp\tcp1.dgn 09/21/2004 11:19:40 AM

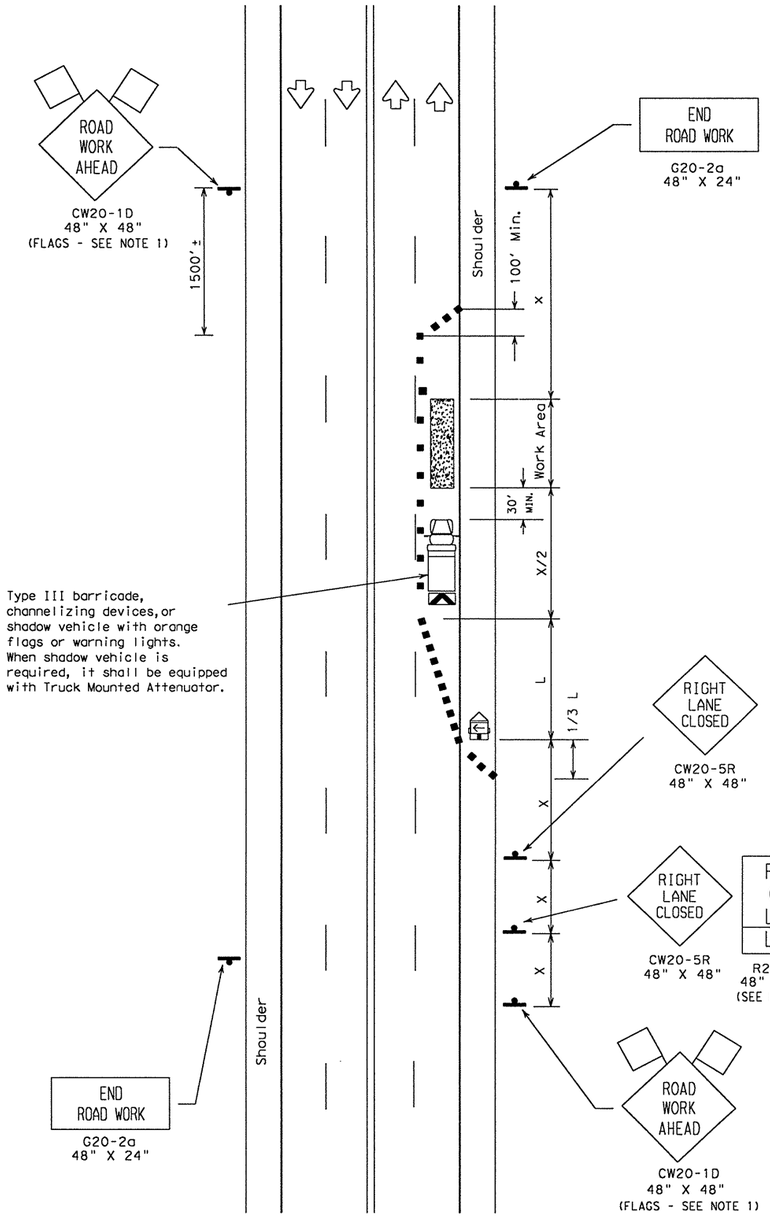

TCP (1-4a)

One Lane Closed

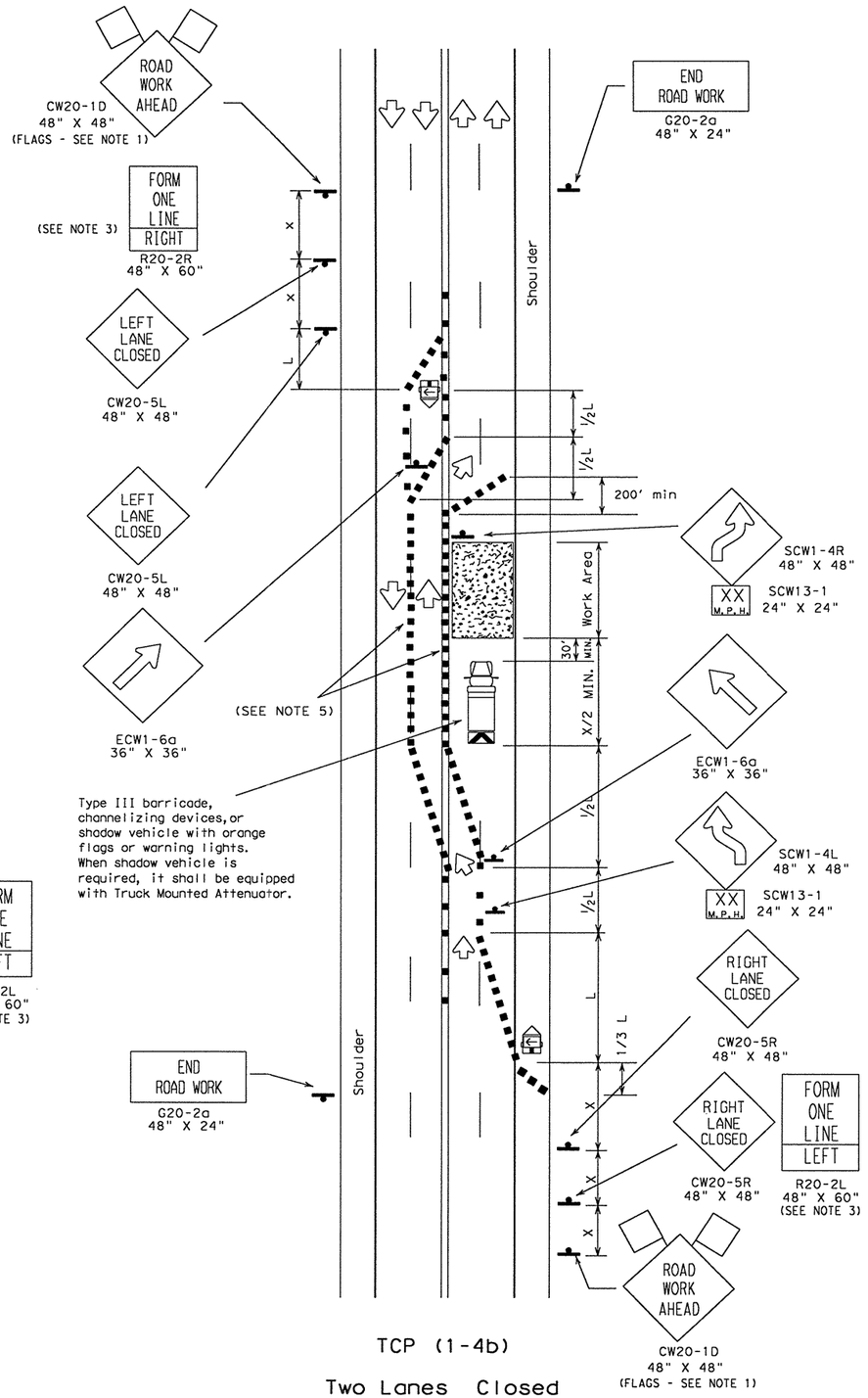

TCP (1-4b)

Two Lanes Closed

LEGEND

Type III Barricade ■ ■ Channelizing Devices Flag

Heavy Work Vehicle Truck Mounted Attenuator

Trailer Mounted Flashing Arrow Panel (M) Portable Changeable Message Sign

Flagger Sign Post

Posted Speed ✳	Formula	Minimum Desirable Taper Lengths ✳✳ 10' Offset	11' Offset	12' Offset	Suggested Maximum Spacing of Device On a Taper	On a Tangent	Minimum Sign Spacing X Distance
30	$L=\frac{WS^2}{60}$	150'	165'	180'	30'	60'-75'	120'
35		205'	225'	245'	35'	70'-90'	160'
40		265'	295'	320'	40'	80'-100'	240'
45	L=WS	450'	495'	540'	45'	90'-110'	320'
50		500'	550'	600'	50'	100'-125'	400'
55		550'	605'	660'	55'	110'-140'	500'
60		600'	660'	720'	60'	120'-150'	✳600'
65		650'	715'	780'	65'	130'-165'	✳700'
70		700'	770'	840'	70'	140'-175'	✳800'

✳ Conventional Roads Only

✳✳ Taper lengths have been rounded off.
L=Length of Taper (FT.) W=Width of Offset (FT.) S=Posted Speed (MPH)

TYPICAL USAGE:				
MOBILE	SHORT DURATION	SHORT TERM STATIONARY	INTERMEDIATE TERM STATIONARY	LONG TERM STATIONARY
	✓	✓		

GENERAL NOTES:

1. Unless otherwise stated in the plans, flags attached to the signs are REQUIRED.
2. All traffic control devices illustrated are REQUIRED, except those denoted with the triangle symbol may be omitted when stated elsewhere in the plans.
3. The FORM ONE LANE LEFT sign may be used following the RIGHT LANE CLOSED sign. Spacing distance between signs should be the minimum distance indicated.
4. ROAD WORK AHEAD sign may be repeated if the visibility of the work zone is less than 1500'.
5. If pavement markings are not removed and traffic is directed over a double yellow centerline, the maximum spacing of channelizing devices in a tangent section should be no greater than 10 feet.

Only pre-qualified products shall be used. A list of compliant products and their sources may be obtained by writing or faxing:

Standards Engineer
Traffic Operations Division - TE
Texas Department of Transportation
125 East 11th Street
Austin, Texas 78701-2483
Phone (512) 416-3335
Fax (512) 416-3161
E-mail TRF-STANDARD@mailgw.dot.state.tx.us

The requirement for shadow vehicles will be listed in the project GENERAL NOTES, Item 502, Barricades, Signs and Traffic Handling.

STANDARD PLANS
TEXAS DEPARTMENT OF TRANSPORTATION
Traffic Operations Division

TRAFFIC CONTROL PLAN

TCP(1-4)-98

© TxDOT December 1985 DN:-LR CK:-MT DW:-DN CK:-MT MEG NO.:

REVISIONS	STATE DISTRICT	FEDERAL REGION	FEDERAL AID PROJECT	SHEET
2-94	AUS	6	CC 337-1-29	56
8-95	COUNTY		CONTROL / SECTION / JOB	HIGHWAY
1-97	WILLIAMSON		0337 / 01 / 029	SH 29
4-98				

...\txdot standards\tcp\tcp1.dgn 09/21/2004 11:19:40 AM

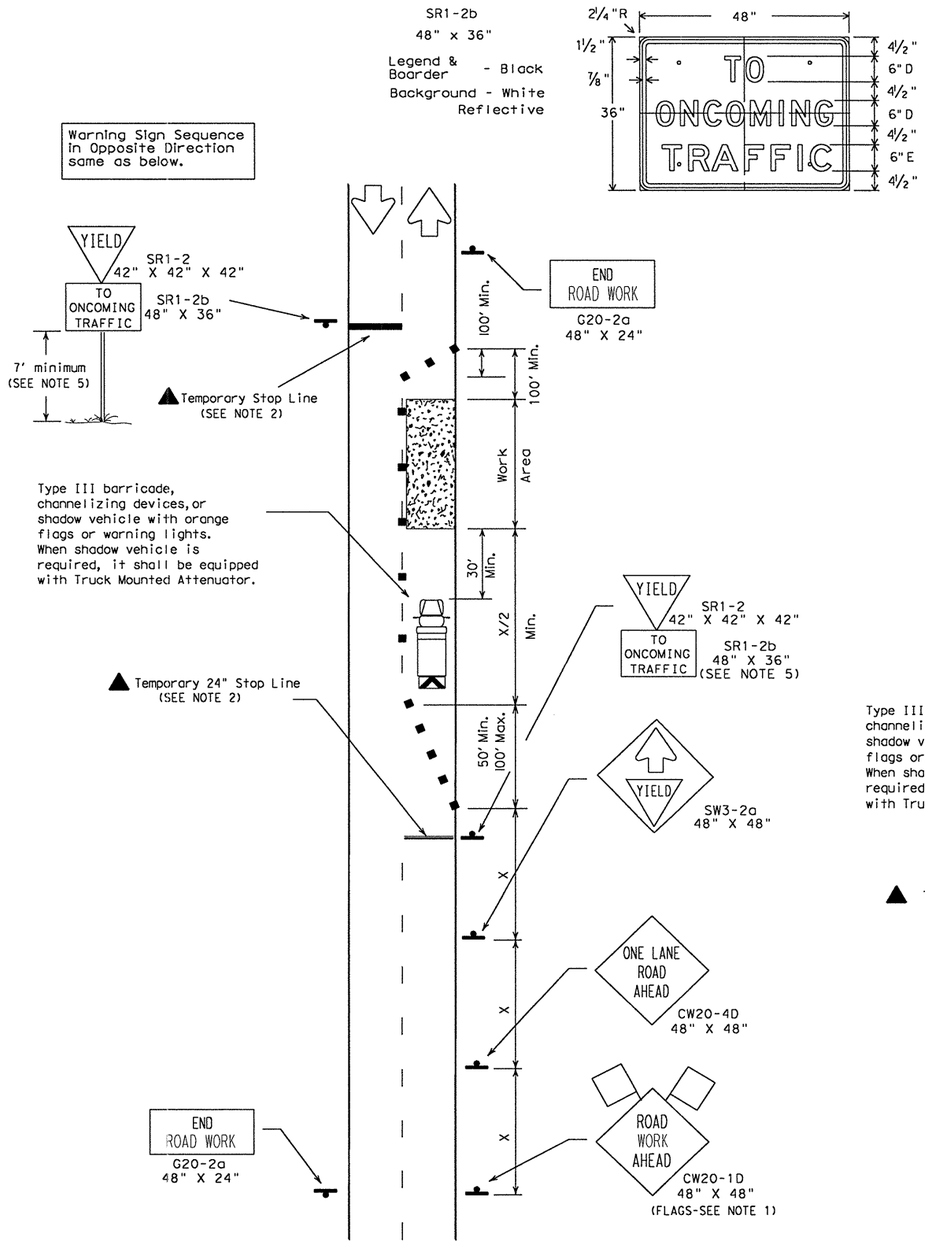

TCP (2-2a)

2-Lane Roadway Without Paved Shoulders
One Lane Closed
Adequate Field of View

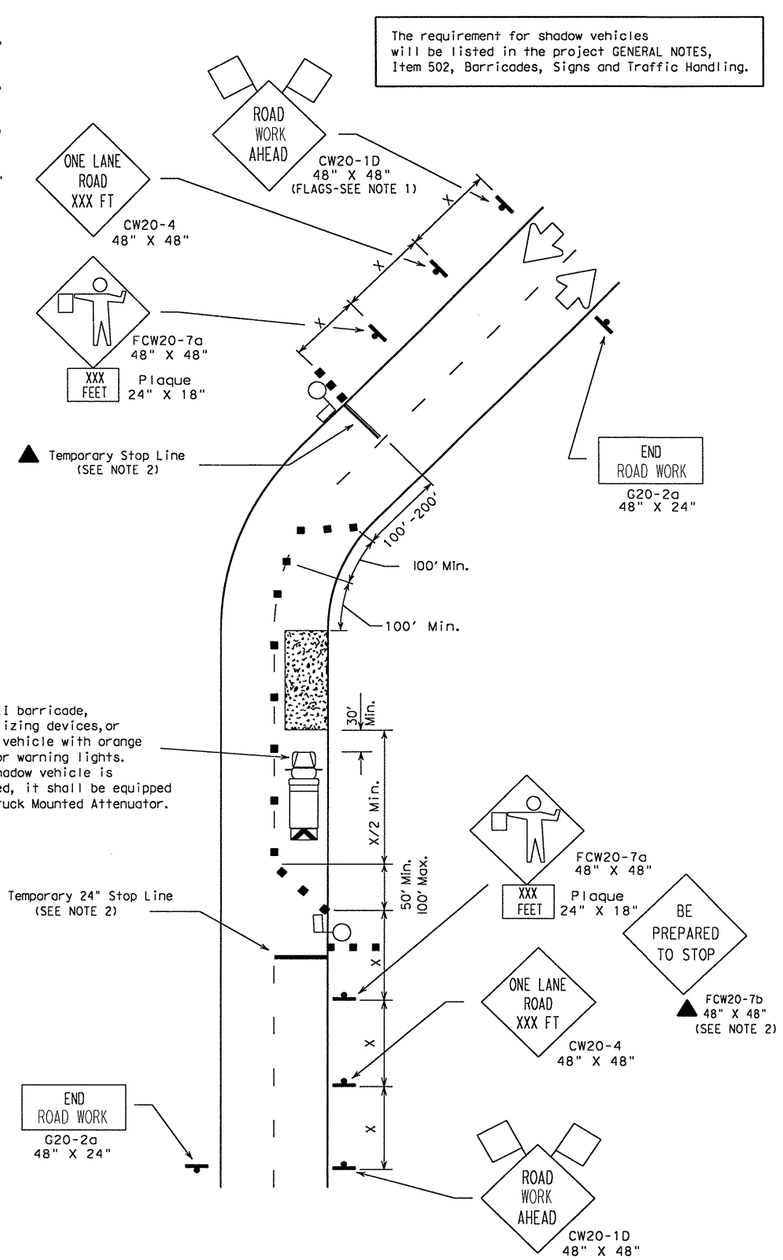

TCP (2-2b)

2-Lane Roadway Without Paved Shoulders
One Lane Closed
Inadequate Field of View

LEGEND

Type III Barricade ■ ■ Channelizing Devices Flag
Heavy Work Vehicle Truck Mounted Attenuator
Trailer Mounted Flashing Arrow Panel (M) Portable Changeable Message Sign
Flagger Sign Post

Posted Speed ✳	Formula	Minimum Desirable Taper Lengths ✳✳ 10' Offset	11' Offset	12' Offset	Suggested Maximum Spacing of Device On a Taper	On a Tangent	Minimum Sign Spacing X Distance
30	$L=\frac{WS^2}{60}$	150'	165'	180'	30'	60'-75'	120'
35		205'	225'	245'	35'	70'-90'	160'
40		265'	295'	320'	40'	80'-100'	240'
45	L=WS	450'	495'	540'	45'	90'-110'	320'
50		500'	550'	600'	50'	100'-125'	400'
55		550'	605'	660'	55'	110'-140'	500'
60		600'	660'	720'	60'	120'-150'	✳600'
65		650'	715'	780'	65'	130'-165'	✳700'
70		700'	770'	840'	70'	140'-175'	✳800'

✳ Conventional Roads Only

✳✳ Taper lengths have been rounded off.
L=Length of Taper (FT.) W=Width of Offset (FT.) S=Posted Speed (MPH)

TYPICAL USAGE:				
MOBILE	SHORT DURATION	SHORT TERM STATIONARY	INTERMEDIATE TERM STATIONARY	LONG TERM STATIONARY
	✓	✓	✓	

GENERAL NOTES:

1. Flags attached to signs are REQUIRED.
2. All traffic control devices illustrated are REQUIRED, except those denoted with the triangle symbol may be omitted when stated elsewhere in the plans.
3. The BE PREPARED TO STOP sign may be installed after the ONE LANE ROAD XXX FT sign, but proper sign spacing shall be maintained.
4. YIELD sign traffic control may be used on projects with approaches that have adequate sight distance. For projects in urban areas, work zones should be no longer than one half city block. In rural areas on roadways with less than 4000 ADT and work areas should be no longer than 400'.
5. YIELD TO ONCOMING TRAFFIC sign shall be placed on a support at a 7' minimum mounting height.
6. Flaggers should use two-way radios or other methods of communication to control traffic.
7. Length of work area should be based on the ability of flaggers to communicate.
8. For intermediate term situations, when it is not feasible to remove and restore pavement markings, the channelization must be made dominant by using a very close spacing. This is especially important in locations of conflicting information, such as where traffic is directed over a double yellow centerline. In such locations a maximum channelizing device spacing of 10 feet is recommended. The 10 foot channelizing device spacing recommendation is intended for the area of conflicting information and not the entire work zone.

STANDARD PLANS
TEXAS DEPARTMENT OF TRANSPORTATION
Traffic Operations Division

TRAFFIC CONTROL PLAN

TCP(2-2)-03

©TxDOT December 1985

DN: LR	CK: MT	DW: DN	CK: MT	MSG NO.:

REVISIONS	STATE DISTRICT	FEDERAL REGION	FEDERAL AID PROJECT	SHEET
8-95	AUS	6	CC 337-1-29	57
1-97				
4-98				
3-03				

COUNTY	CONTROL	SECTION	JOB	HIGHWAY
WILLIAMSON	0337	01	029	SH 29

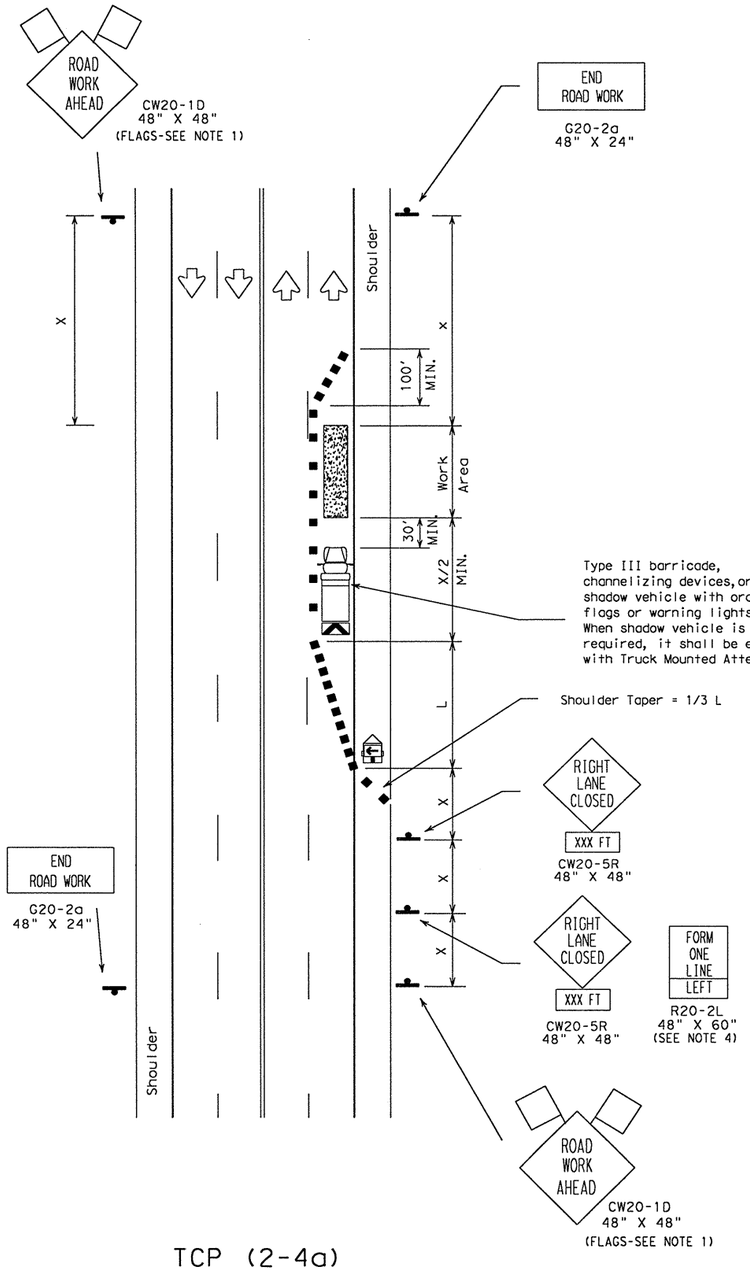

TCP (2-4a)

One Lane Closed
Less Than Two Weeks

The requirement for shadow vehicles will be listed in the project GENERAL NOTES, Item 502, Barricades, Signs and Traffic Handling.

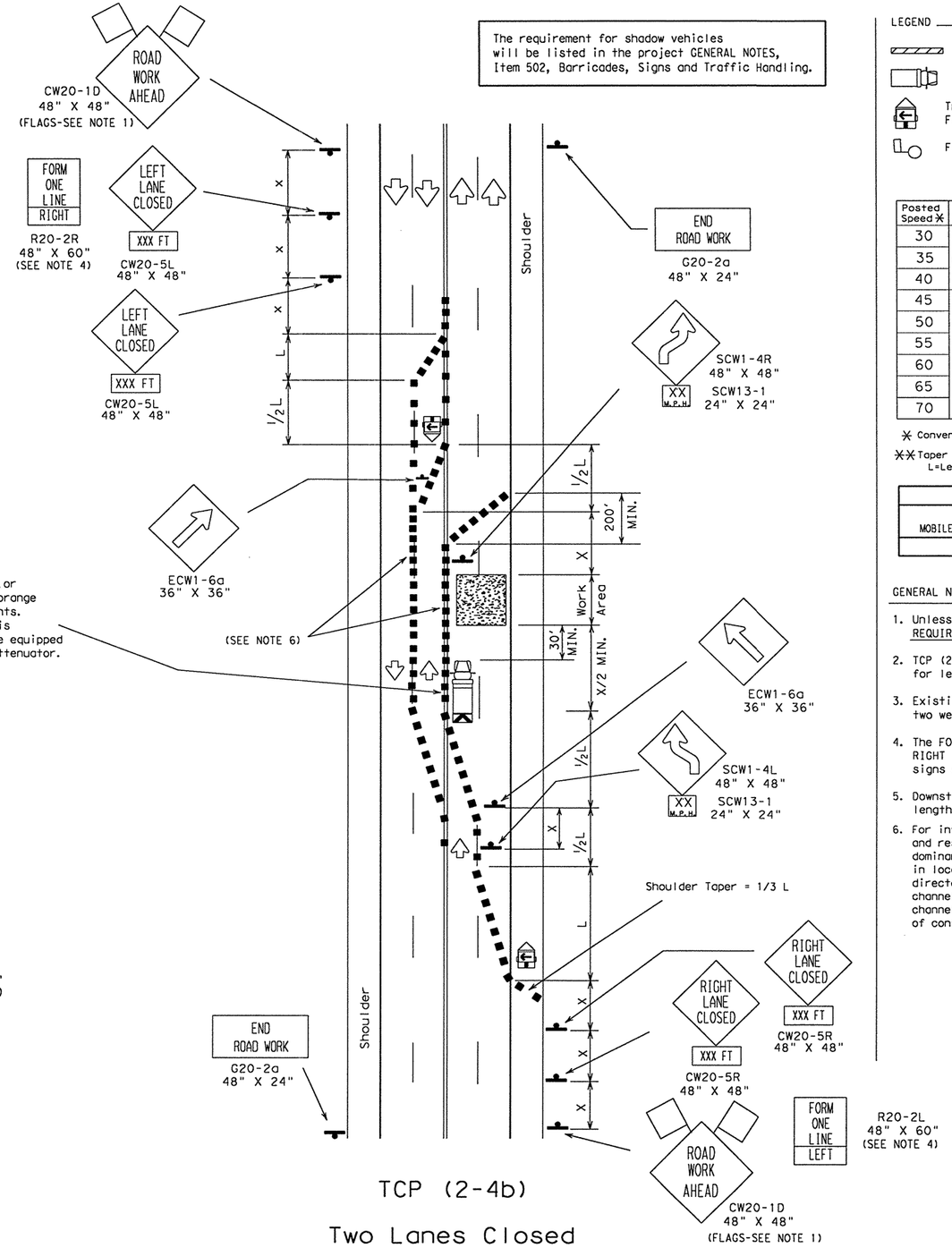

TCP (2-4b)

Two Lanes Closed
Less Than Two Weeks

LEGEND

Type III Barricade ■ ■ Channelizing Devices Flag
Heavy Work Vehicle Truck Mounted Attenuator
Trailer Mounted Flashing Arrow Panel
Portable Changeable Message Sign
Flagger Sign Post

Posted Speed ✳	Formula	Minimum Desirable Taper Lengths ✳✳ 10' Offset	11' Offset	12' Offset	Suggested Maximum Spacing of Device On a Taper	On a Tangent	Minimum Sign Spacing X Distance
30	$L=\frac{WS^2}{60}$	150'	165'	180'	30'	60'-75'	120'
35		205'	225'	245'	35'	70'-90'	160'
40		265'	295'	320'	40'	80'-100'	240'
45	L=WS	450'	495'	540'	45'	90'-110'	320'
50		500'	550'	600'	50'	100'-125'	400'
55		550'	605'	660'	55'	110'-140'	500'
60		600'	660'	720'	60'	120'-150'	✳600'
65		650'	715'	780'	65'	130'-165'	✳700'
70		700'	770'	840'	70'	140'-175'	✳800'

✳ Conventional Roads Only

✳✳ Taper lengths have been rounded off.
L=Length of Taper (FT.) W=Width of Offset (FT.) S=Posted Speed (MPH)

TYPICAL USAGE:				
MOBILE	SHORT DURATION	SHORT TERM STATIONARY	INTERMEDIATE TERM STATIONARY	LONG TERM STATIONARY
		✓	✓	

GENERAL NOTES:

1. Unless otherwise stated in the plans, flags attached to signs are REQUIRED.
2. TCP (2-4b) shall be used only on projects that will be at a location for less than two weeks.
3. Existing pavement markings may remain in place for projects less than two weeks in duration.
4. The FORM ONE LINE LEFT (or RIGHT) sign may be used following the RIGHT (or LEFT) LANE CLOSED XXX FT sign. Spacing distance between signs should be the minimum distance indicated.
5. Downstream taper is optional. When used, it should be 100' minimum length per lane.
6. For intermediate term situations, when it is not feasible to remove and restore pavement markings, the channelization must be made dominant by using a very close spacing. This is especially important in locations of conflicting information, such as where traffic is directed over a double yellow centerline. In such locations a maximum channelizing device spacing of 10 feet is recommended. The 10 foot channelizing device spacing recommendation is intended for the area of conflicting information and not the entire work zone.

STANDARD PLANS
TEXAS DEPARTMENT OF TRANSPORTATION
Traffic Operations Division

TRAFFIC CONTROL PLAN

TCP(2-4)-03

©TxDOT December 1985

DN: LR	CK: MT	DW: DN	CK: DM	MSG NO.:

REVISIONS	STATE DISTRICT	FEDERAL REGION	FEDERAL AID PROJECT	SHEET
8-95	AUS	6	CC 337-1-29	58
1-97				
4-98				
3-03				

COUNTY	CONTROL	SECTION	JOB	HIGHWAY
WILLIAMSON	0337	01	029	SH 29

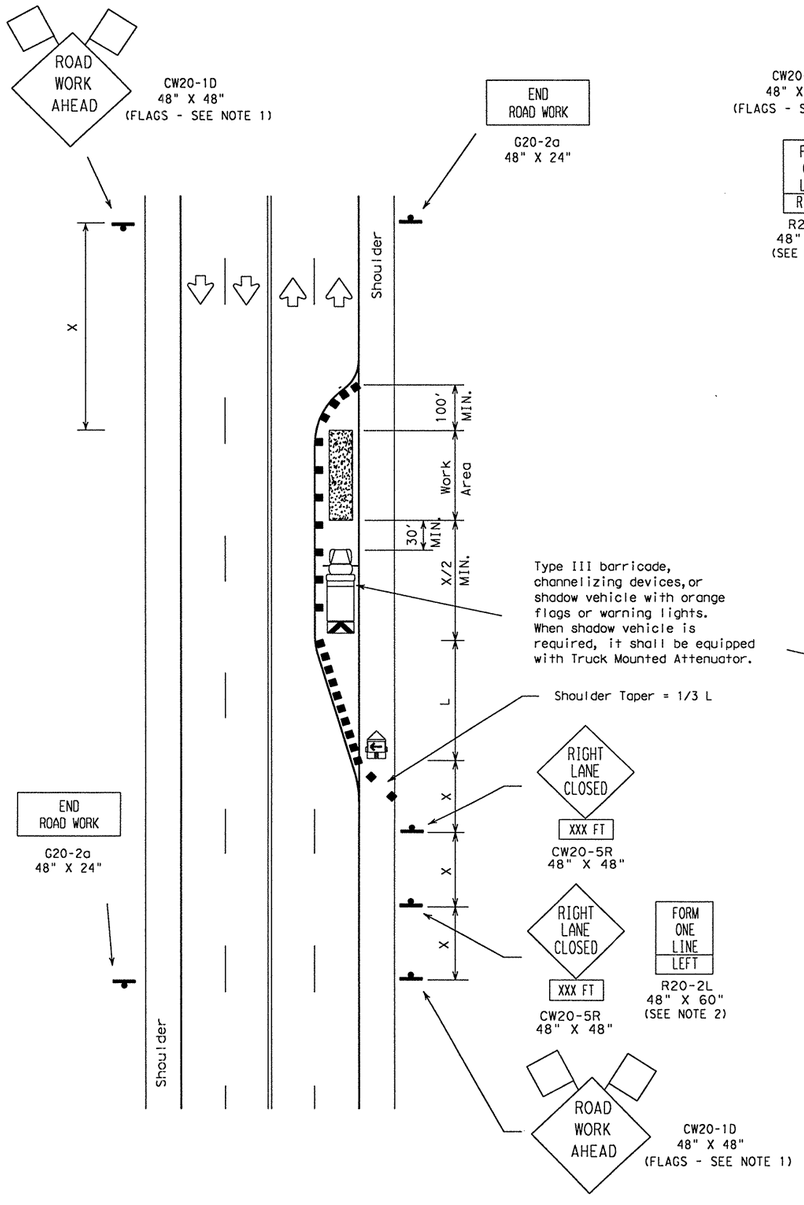

TCP (2-5a)
One Lane Closed
More Than Two Weeks

The requirement for shadow vehicles will be listed in the project GENERAL NOTES, Item 502, Barricades, Signs and Traffic Handling.

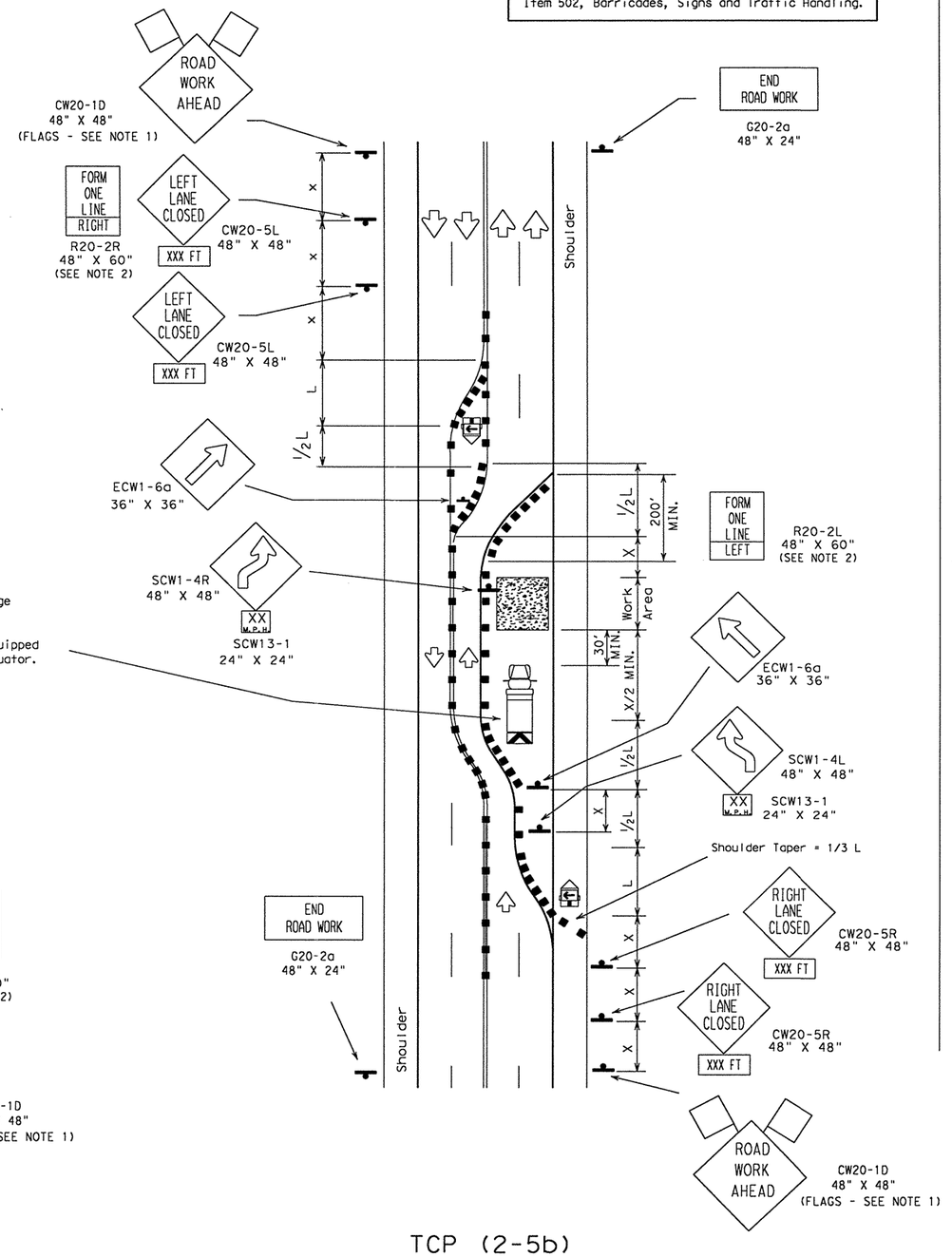

TCP (2-5b)
Two Lanes Closed
More Than Two Weeks

LEGEND

Type III Barricade ■ ■ Channelizing Devices Flag
Heavy Work Vehicle Truck Mounted Attenuator
Trailer Mounted Flashing Arrow Panel
Portable Changeable Message Sign
Flagger Sign Post

Posted Speed ✳	Formula	Minimum Desirable Taper Lengths ✳✳ 10' Offset	11' Offset	12' Offset	Suggested Maximum Spacing of Device On a Taper	On a Tangent	Minimum Sign Spacing X Distance
30	$L=\frac{WS^2}{60}$	150'	165'	180'	30'	60'-75'	120'
35		205'	225'	245'	35'	70'-90'	160'
40		265'	295'	320'	40'	80'-100'	240'
45	L=WS	450'	495'	540'	45'	90'-110'	320'
50		500'	550'	600'	50'	100'-125'	400'
55		550'	605'	660'	55'	110'-140'	500'
60		600'	660'	720'	60'	120'-150'	✳600'
65		650'	715'	780'	65'	130'-165'	✳700'
70		700'	770'	840'	70'	140'-175'	✳800'

✳ Conventional Roads Only

✳✳ Taper lengths have been rounded off.
L=Length of Taper (FT.) W=Width of Offset (FT.) S=Posted Speed (MPH)

TYPICAL USAGE:				
MOBILE	SHORT DURATION	SHORT TERM STATIONARY	INTERMEDIATE TERM STATIONARY	LONG TERM STATIONARY
			✓	✓

GENERAL NOTES:

1. Unless otherwise stated in the plans, flags attached to signs are REQUIRED.
2. The FORM ONE LINE LEFT (or RIGHT) sign may be used following the RIGHT (or LEFT) LANE CLOSED XXX FT sign. Spacing distance between signs should be the minimum distance indicated.
3. When the work zone will be in place more than two weeks, conflicting pavement markings shall be removed. New markings shall be installed and maintained to the satisfaction of the Engineer.
4. Downstream taper is optional. When used, it should be 100' minimum length per lane.
5. For intermediate term situations, when it is not feasible to remove and restore pavement markings, the channelization must be made dominant by using a very close spacing. This is especially important in locations of conflicting information, such as where traffic is directed over a double yellow centerline. In such locations a maximum channelizing device spacing of 10 feet is recommended. The 10 foot channelizing device spacing recommendation is intended for the area of conflicting information and not the entire work zone.

STANDARD PLANS
TEXAS DEPARTMENT OF TRANSPORTATION
Traffic Operations Division

TRAFFIC CONTROL PLAN

TCP(2-5)-03

©TxDOT December 1985

DN: - LR	CK: -	DW: - DN	CK: - MT	REG NO.:

REVISIONS	STATE DISTRICT	FEDERAL REGION	FEDERAL AID PROJECT	SHEET
8-95	AUS	6	CC 337-1-29	59
1-97				
4-98	COUNTY		CONTROL / SECTION / JOB	HIGHWAY
3-03	WILLIAMSON		0337 / 01 / 029	SH 29

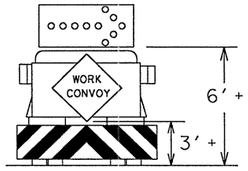

Typical Trail Vehicle
with RIGHT Directional display
Flashing Arrow Panel

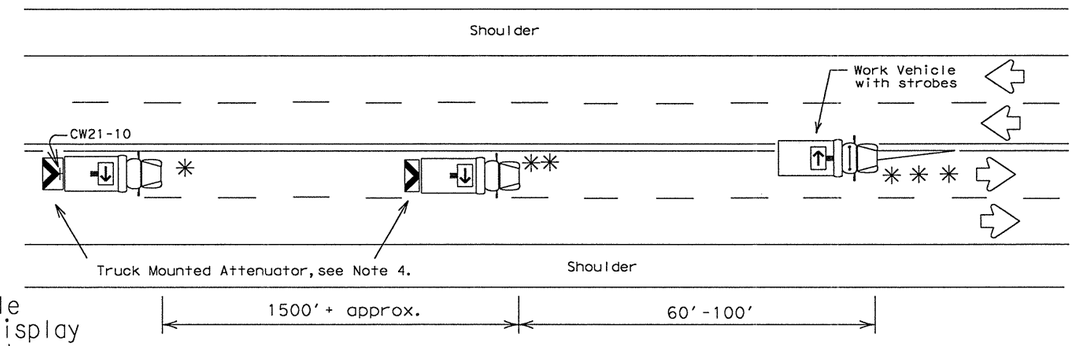

TCP (3-1a)
Undivided Multilane Roadway

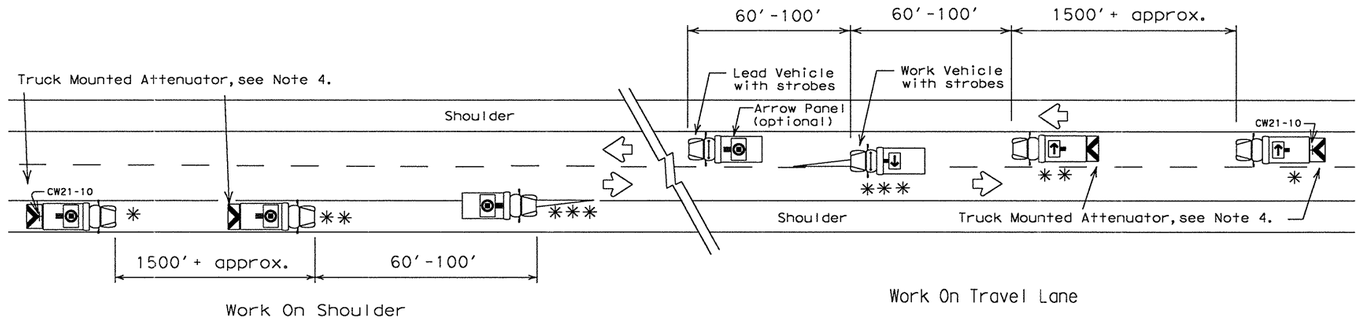

TCP (3-1b)
Two-Way Roadway With Paved Shoulders

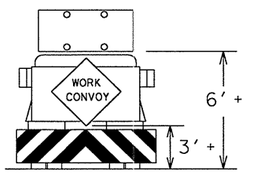

Typical Trail Vehicle
with (four corner flash)
CAUTION display
Flashing Arrow Panel

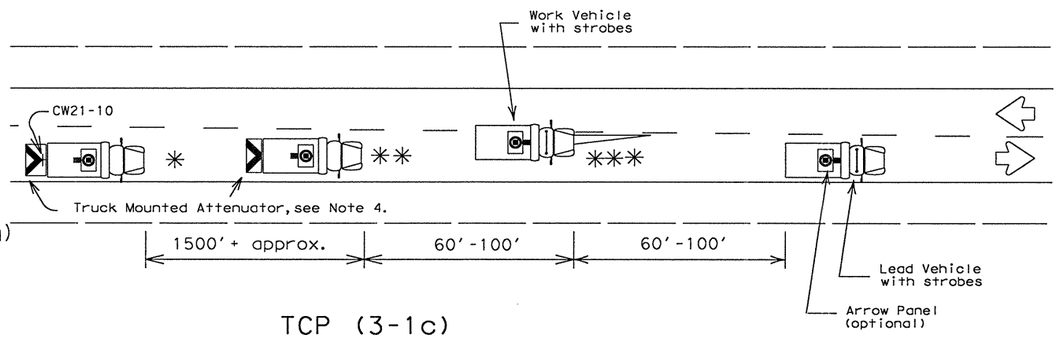

TCP (3-1c)
Two-Way Roadway Without Paved Shoulders

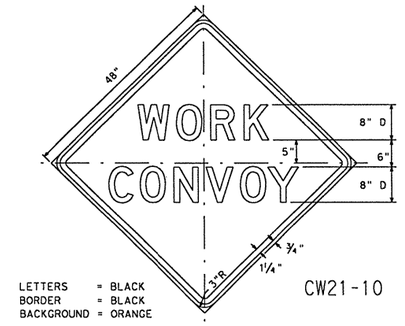

LETTERS = BLACK
BORDER = BLACK
BACKGROUND = ORANGE

CW21-10

Legend:

- ✱ TRAIL VEHICLE
- ✱ ✱ SHADOW VEHICLE
- ✱ ✱ ✱ WORK VEHICLE
- Truck mounted attenuator
- HEAVY WORK VEHICLE

Arrow Panel Displays

- RIGHT Directional
- LEFT Directional
- RIGHT or LEFT Directional
- CAUTION mode

GENERAL NOTES:

1. TRAIL, SHADOW, LEAD, and work vehicles shall be equipped with arrow panels as illustrated. The Engineer will determine if the LEAD VEHICLE and/or TRAIL VEHICLE are required based on prevailing roadway conditions, traffic volume, and sight distance restrictions.
2. All traffic control devices shall be in accordance with the "Texas Manual on Uniform Traffic Control Devices" (TMUTCD), latest edition.
3. The use of yellow rotating beacons or strobe lights on vehicles are required unless otherwise stated elsewhere in the plans.
4. The use of truck mounted attenuators (TMA) on the SHADOW VEHICLE and the TRAIL VEHICLE are required.
5. Optional striping on the back panel of all truck mounted attenuators shall be 8" red and white reflective sheeting placed in an inverted "V" design. Reflective sheeting shall meet or exceed the reflectivity and color requirements of DEPARTMENTAL MATERIAL SPECIFICATION D-9-8300, TYPE C.
6. Flashing Arrow Panels shall be Type B or Type C as per BC Standards. The panel operation shall be controlled from inside the vehicle.
7. Each vehicle shall have two-way radio communication capability.
8. When work convoys must change lanes, the TRAIL VEHICLE should change lanes first to shadow the other convoy vehicles.
9. Vehicle spacing between TRAIL VEHICLE and SHADOW VEHICLE will vary depending on sight distance restrictions. Motorists approaching the work convoy should be able to see the TRAIL VEHICLE in time to slow down and/or change lanes as they approach the TRAIL VEHICLE.

Only pre-qualified products shall be used. A list of compliant products and their sources may be obtained by writing or faxing:

Standards Engineer
Traffic Operations Division - TE
Texas Department of Transportation
125 East 11th Street
Austin, Texas 78701-2483
Phone (512) 416-3335
Fax (512) 416-3161
E-mail TRF-STANDARD@mailgw.dot.state.tx.us

Shadow and trail vehicle shall be equipped with Truck Mounted Attenuator.

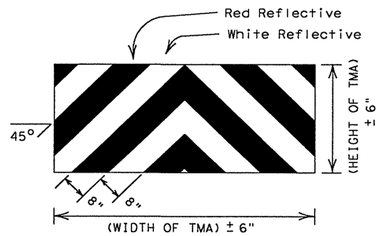

OPTIONAL STRIPING FOR TMA

STRIPING FOR TMA WILL BE REQUIRED ON ALL PROJECTS AWARDED AFTER JANUARY 1, 2000

STANDARD PLANS
TEXAS DEPARTMENT OF TRANSPORTATION
Traffic Operations Division

TRAFFIC CONTROL PLAN
MOBILE OPERATIONS
UNDIVIDED HIGHWAYS

TCP(3-1)-98

©TxDOT December 1985

DW: LR	CK:	DW: DN	CK: DM	MSG NO.:

REVISIONS	STATE DISTRICT	FEDERAL REGION	FEDERAL AID PROJECT	SHEET
2-94	AUS	6	CC 337-1-29	60
8-95				
1-97	COUNTY		CONTROL / SECTION / JOB	HIGHWAY
4-98	WILLIAMSON		0337 / 01 / 029	SH 29

...\txdot standards\tcp\tcp3.dgn 09/21/2004 11:19:42 AM

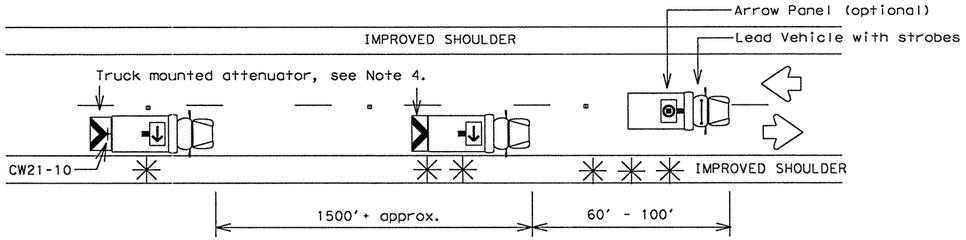

Two Lane Highway With Paved Shoulders (work on travel lane)

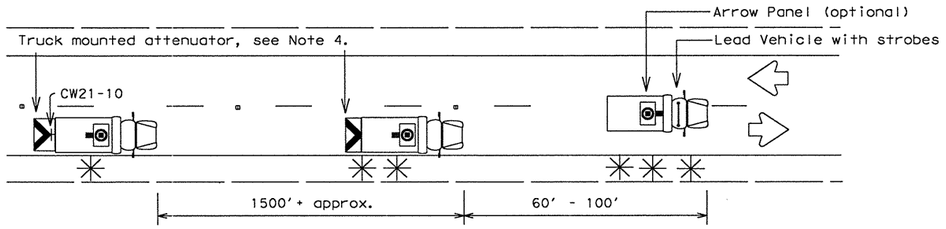

Two Lane Highway Without Paved Shoulders (work on travel lane)

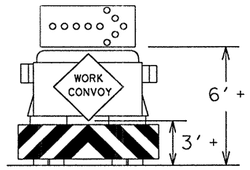

TYPICAL TRAIL VEHICLE
RIGHT Directional display
Flashing Arrow Panel

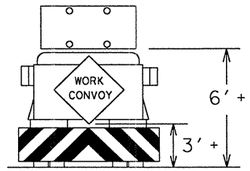

TYPICAL TRAIL VEHICLE
with (four corner flash)
CAUTION display
Flashing Arrow Panel

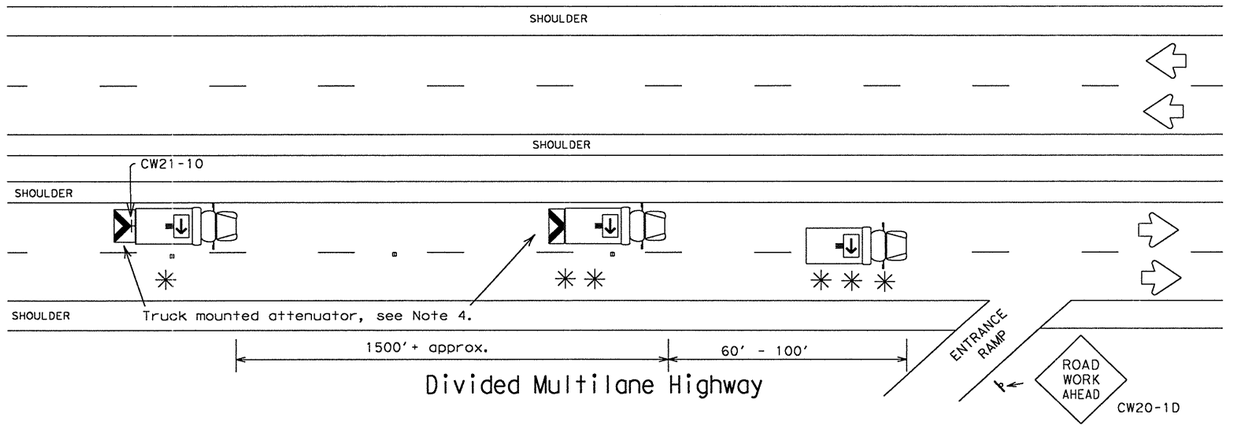

Divided Multilane Highway

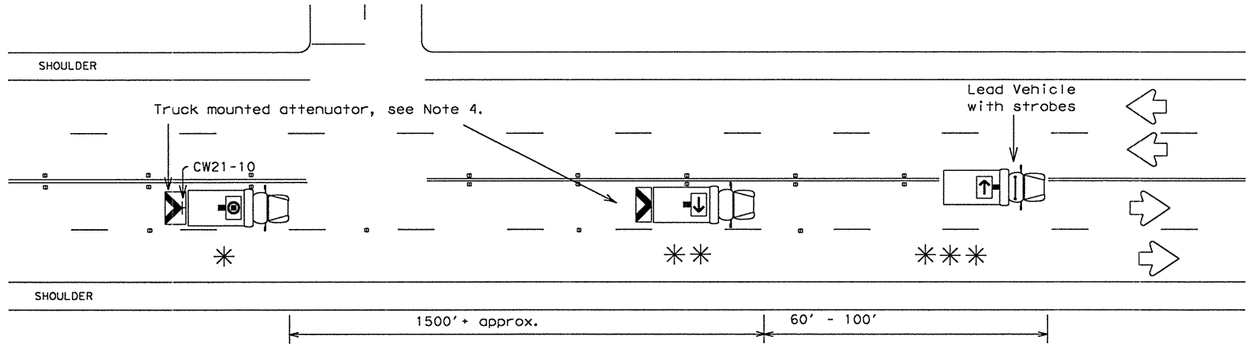

Undivided Multilane Highway

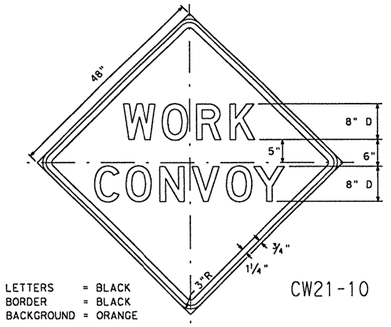

LETTERS = BLACK
BORDER = BLACK
BACKGROUND = ORANGE

CW21-10

Legend:

- ✱ TRAIL VEHICLE
- ✱✱ SHADOW VEHICLE
- ✱✱✱ WORK VEHICLE
- Truck mounted attenuator
- HEAVY WORK VEHICLE

Arrow Panel Displays

- RIGHT Directional
- LEFT Directional
- RIGHT or LEFT Directional
- CAUTION mode

GENERAL NOTES:

1. TRAIL, SHADOW, LEAD, and work vehicles shall be equipped with arrow panels as illustrated. The Engineer will determine if the LEAD VEHICLE and/or TRAIL VEHICLE are required based on prevailing roadway conditions, traffic volume, and sight distance restrictions.
2. All traffic control devices shall be in accordance with the "Texas Manual on Uniform Traffic Control Devices" (TMUTCD), latest edition.
3. The use of yellow rotating beacons or strobe lights on vehicles are required unless otherwise stated elsewhere in the plans.
4. The use of truck mounted attenuators (TMA) on the SHADOW VEHICLE and the TRAIL VEHICLE are required.
5. Optional striping on the back panel of all truck mounted attenuators shall be 8" red and white reflective sheeting placed in an inverted "V" design. Reflective sheeting shall meet or exceed the reflectivity and color requirements of DEPARTMENTAL MATERIAL SPECIFICATION D-9-8300, TYPE C.
6. Flashing Arrow Panels shall be Type B or Type C as per BC Standards. The panel operation shall be controlled from inside the vehicle.
7. Each vehicle shall have two-way radio communication capability.
8. When work convoys must change lanes, the TRAIL VEHICLE should change lanes first to shadow the other convoy vehicles.
9. Vehicle spacing between TRAIL VEHICLE and SHADOW VEHICLE will vary depending on sight distance restrictions. Motorists approaching the work convoy should be able to see the TRAIL VEHICLE in time to slow down and/or change lanes as they approach the TRAIL VEHICLE.

Only pre-qualified products shall be used. A list of compliant products and their sources may be obtained by writing or faxing:

Standards Engineer
Traffic Operations Division - TE
Texas Department of Transportation
125 East 11th Street
Austin, Texas 78701-2483
Phone (512) 416-3335
Fax (512) 416-3161
E-mail TRF-STANDARD@mailgw.dot.state.tx.us

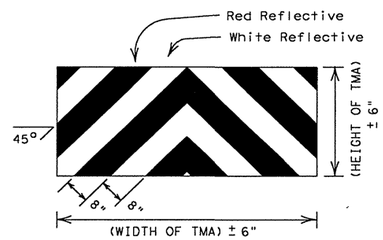

OPTIONAL STRIPING FOR TMA

STRIPING FOR TMA WILL BE REQUIRED ON ALL PROJECTS AWARDED AFTER JANUARY 1, 2000

Shadow and trail vehicle shall be equipped with Truck Mounted Attenuator.

STANDARD PLANS
TEXAS DEPARTMENT OF TRANSPORTATION
Traffic Operations Division

TRAFFIC CONTROL PLAN MOBILE OPERATIONS RAISED PAVEMENT MARKER INSTALLATION TCP(3-3)-98

©TxDOT September 1987 DN: LR CK: - DW: DN CK: DM REC NO.:

REVISIONS	STATE DISTRICT	FEDERAL REGION	FEDERAL AID PROJECT	SHEET
2-94	AUS	6	CC 337-1-29	61
8-95	COUNTY		CONTROL	SECTION	JOB	HIGHWAY
1-97	WILLIAMSON		0337	01	029	SH 29
4-98						

...\txdot standards\tcp\tcp3.dgn 09/21/2004 11:19:43 AM

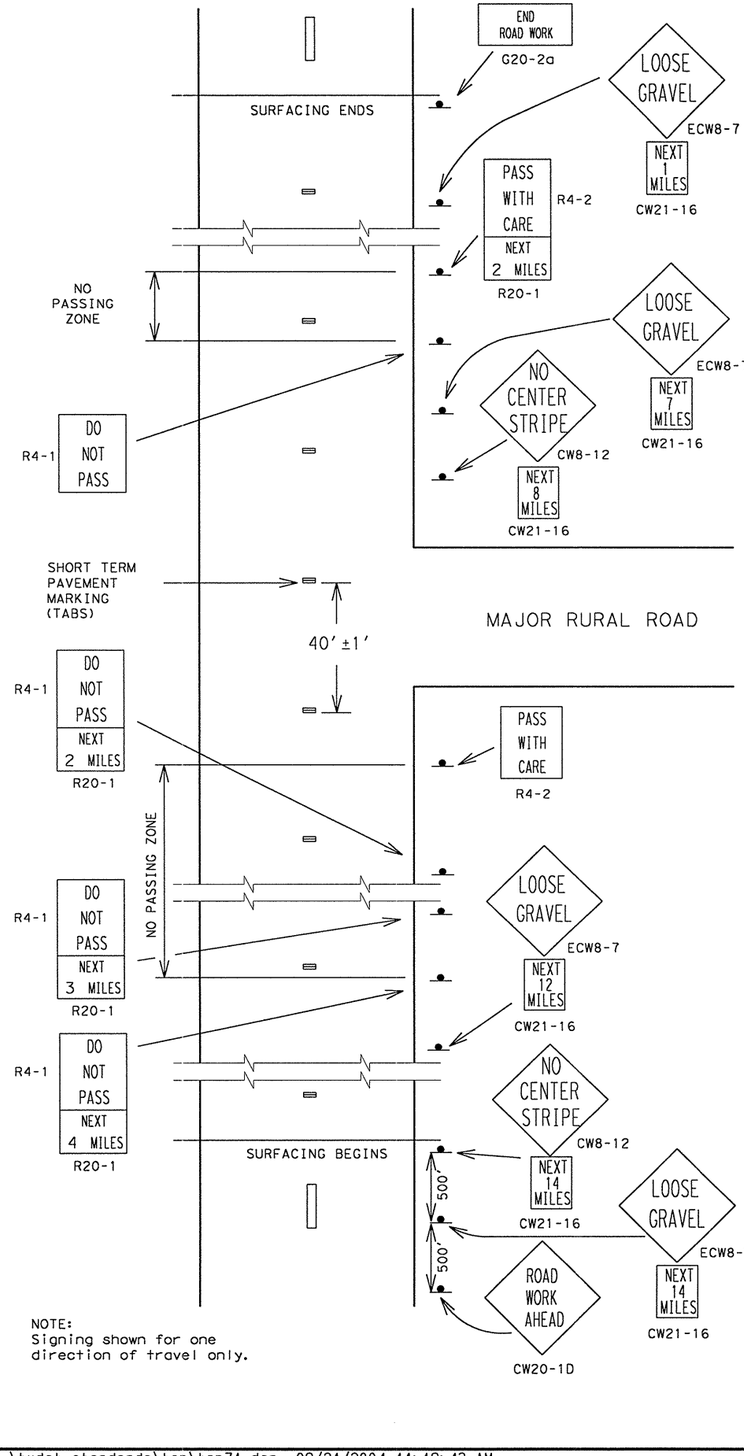

NOTE:
Signing shown for one direction of travel only.

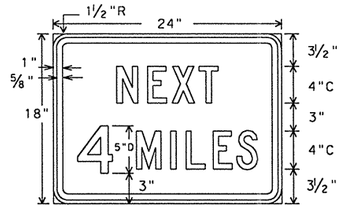

R20-1
24"x18"

Legend - Black
Border - Black
Background - White Refl.

FOR USE WITH REGULATORY SIGNS ONLY

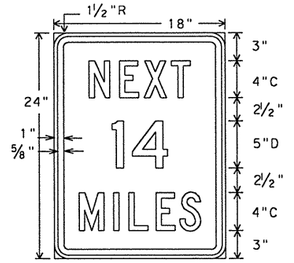

CW21-16
18"x24"

Legend - Black
Border - Black
Background - Orange Refl.

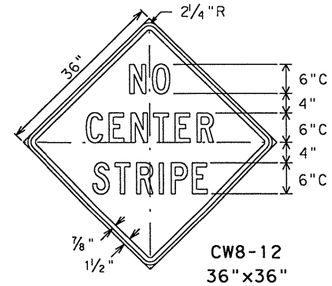

CW8-12
36"x36"

Legend - Black
Border - Black
Background - Orange Refl.

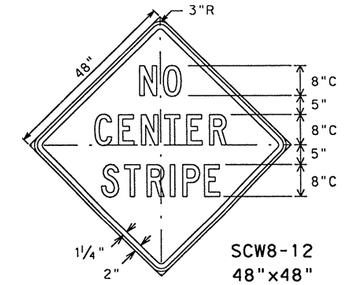

SCW8-12
48"x48"

Legend - Black
Border - Black
Background - Orange Refl.

FOR USE WITH CONSTRUCTION WARNING SIGNS ONLY

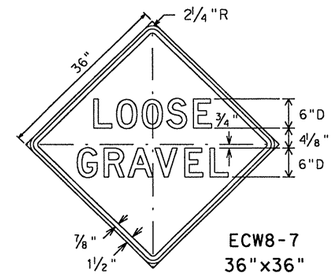

ECW8-7
36"x36"

Legend - Black
Border - Black
Background - Orange Refl.

TEMPORARY FLEXIBLE-REFLECTIVE ROADWAY MARKER TABS

for surfacing projects only

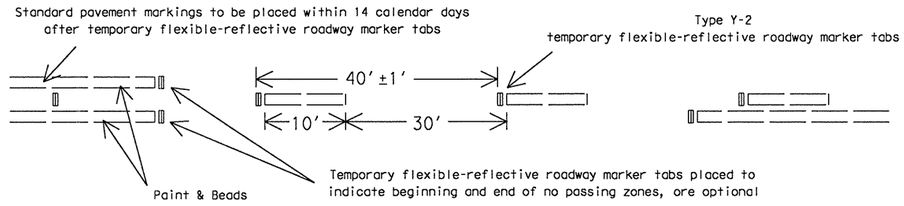

GENERAL NOTES

The traffic control devices detailed on this sheet will be furnished and erected as directed by the Engineer on sections of roadway where the surfacing operation has covered or obliterated existing pavement markings. These traffic control devices are to be used to supplement those required by BC Standards.

"DO NOT PASS" SIGN (R4-1) and NO-PASSING ZONES

Prior to the beginning of construction, all currently striped no-passing zones should be signed with the DO NOT PASS sign (R4-1) and PASS WITH CARE sign (R4-2) placed at the beginning and end of each zone for each direction of travel except as otherwise provided herein. Signs marking these individual no-passing zones need not be covered prior to construction if the signs supplement the existing pavement markings.

At the discretion of the Engineer, in areas of numerous no-passing zones, several zones may be combined and signed as a single zone. If passing is to be prohibited over one or more lengthy sections, a DO NOT PASS sign and a NEXT XX MILES sign (R20-1) may be used at the beginning of such zones. The DO NOT PASS and NEXT XX MILES signs should be repeated every mile to the end of the no-passing zone. In areas where there is considerable distance between no-passing zones, the end of a no-passing zone may be signed with a PASS WITH CARE and NEXT XX MILES sign.

Depending on traffic volumes and length of sections, it may be desirable to prohibit passing throughout the project to prevent damage to windshields and lights. The DO NOT PASS and NEXT XX MILES sign should be used and repeated as often as necessary for this purpose. Where several existing zones are to be combined into one individual no-passing zone, the sign at the beginning of the zone should be covered until the surfacing operation has passed this location so as not to have the DO NOT PASS sign conflict with existing pavement markings. Also, unless one days operation completes the entire length of such combined zones, care must be taken to place DO NOT PASS and PASS WITH CARE signs in order to sign the beginning and end of the no-passing zones in the area where the surfacing operation has stopped for the day.

R4-1 and R4-2 signs should be mounted on fixed supports as detailed on BC Standards. These signs are to remain in place until standard pavement markings are placed.

"NO CENTER STRIPE" SIGN (CW21-15)

At the time construction activity obliterates the existing centerline (low volume roads may not have an existing centerline), a NO CENTER STRIPE sign (CW8-12) should be erected at each end of the work area and just beyond major rural intersections and other location deemed necessary by the Engineer. Where possible, the signs erected at each end of the work area should be located in such a manner that drivers can read the sign and immediately see the change to no centerline. The NO CENTER STRIPE sign should be supplemented with the NEXT XX MILES sign (CW21-16) mounted below it.

The NO CENTER STRIPE sign should be erected as detailed on BC Standards. These signs are to remain in place until standard pavement markings are placed.

"LOOSE GRAVEL" SIGN (ECW8-7)

When construction begins, a LOOSE GRAVEL sign (ECW8-7) should be erected at each end of the work area and repeated at intervals of approximately two (2) miles in rural areas and closer in urban areas. The LOOSE GRAVEL sign should be supplemented with the NEXT XX MILES sign (CW21-16) mounted below it.

The LOOSE GRAVEL sign should be erected as detailed on BC Standards. They should remain in place until the loose gravel condition no longer exists.

PAVEMENT MARKINGS

Short term pavement markings for surfacing projects shall use Temporary Flexible-reflective Roadway Marker Tabs. Tabs are to be installed to provide true alignment for striping crews or as directed by the Engineer. Tabs will be placed at the spacing indicated. Tabs should be applied to the pavement no more than two (2) days before the surfacing is applied. After the surfacing is rolled and swept the cover over the reflective strip shall be removed. Tabs shall NOT be used to simulate edge lines.

Only pre-qualified products shall be used. A list of compliant products and their sources may be obtained by writing or faxing:

Standards Engineer
Traffic Operations Division - TE
Texas Department of Transportation
125 East 11th Street
Austin, Texas 78701-2483
Phone (512) 416-3335
Fax (512) 416-3161
E-mail TRF-STANDARD@mailgw.dot.state.tx.us

TYPICAL USAGE:				
MOBILE	SHORT DURATION	SHORT TERM STATIONARY	INTERMEDIATE TERM STATIONARY	LONG TERM STATIONARY
	✓	✓	✓	✓

STANDARD PLANS
TEXAS DEPARTMENT OF TRANSPORTATION
Traffic Operations Division

TRAFFIC CONTROL DETAILS for SURFACING OPERATIONS

TCP(7-1)-98

©TxDOT March 1991

DN: - LR	CK: - MT	DW: - DN	CK: -	REQ NO.:

REVISIONS	STATE DISTRICT	FEDERAL REGION	FEDERAL AID PROJECT	SHEET
4-92	AUS	6	CC 337-1-29	62
1-97	COUNTY		CONTROL / SECTION / JOB	HIGHWAY
4-98	WILLIAMSON		0337 / 01 / 029	SH 29

...\txdot standards\tcp\tcp71.dgn 09/21/2004 11:19:43 AM

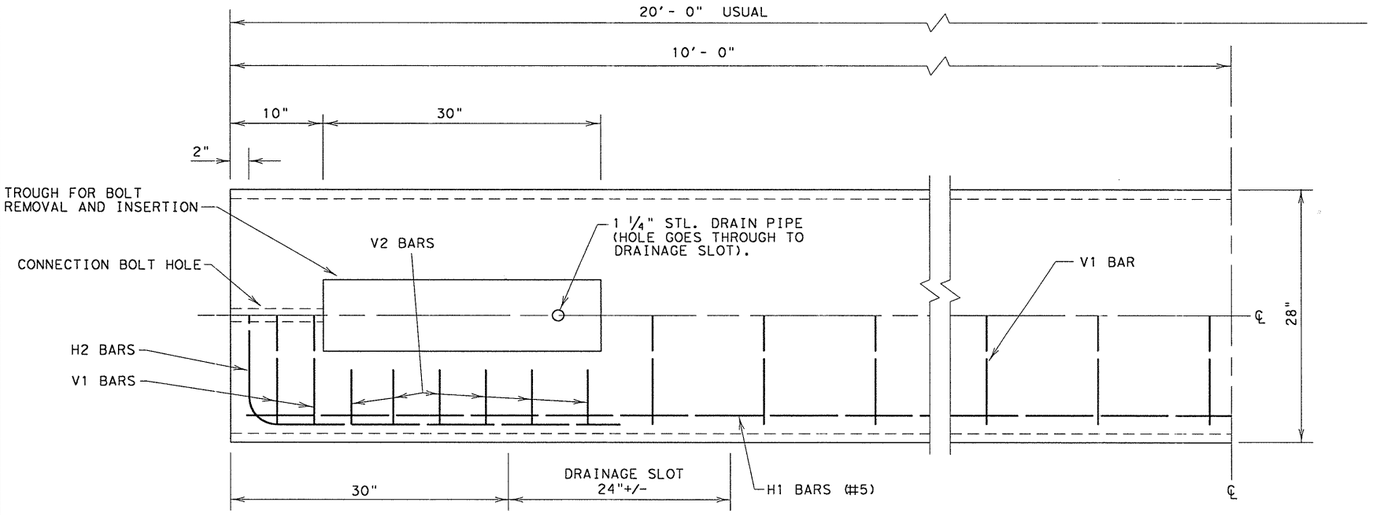

NOTE: CONCRETE ON BOTTOM HALF OF PLAN VIEW IS REMOVED IN ORDER TO SHOW DETAILS

PLAN VIEW - TYPE 1

(SYMMETRICAL ABOUT CENTER LINES)

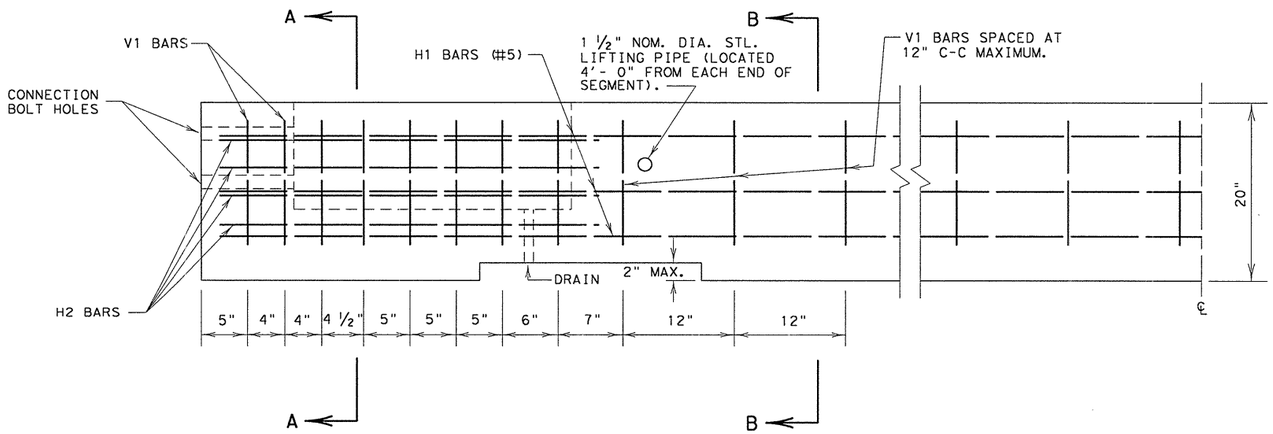

ELEVATION - TYPE 1

(SYMMETRICAL ABOUT CENTER LINES)

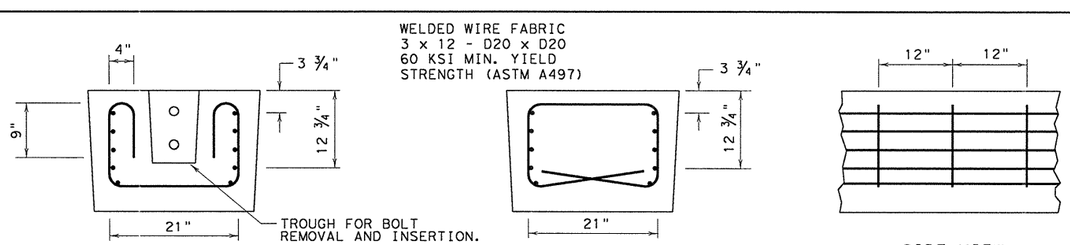

SECTION A-A

SECTION B-B

SIDE VIEW

NOTE: THIS FABRIC OPTION CAN BE USED IN PLACE OF V1, V2 AND H1 BARS. THE H2 BARS SPECIFIED ARE STILL REQUIRED.

WELDED WIRE FABRIC OPTIONAL REINFORCING

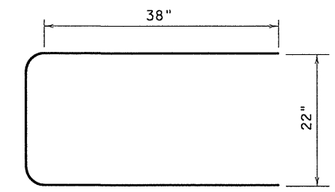

H2 BAR (#5)

(GRADE 60 MIN.)

NOTE: ALL BENDING OF SHEAR REBAR IS AT A 2" RADIUS, UNLESS SPECIFIED OTHERWISE.

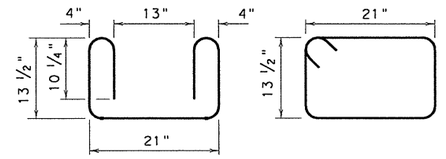

V2 BAR (#4)

V1 BAR (#4)

NOTE: H2 REBAR IS TO BE BENT AT A 3" RADIUS.

REINFORCING STEEL DETAILS

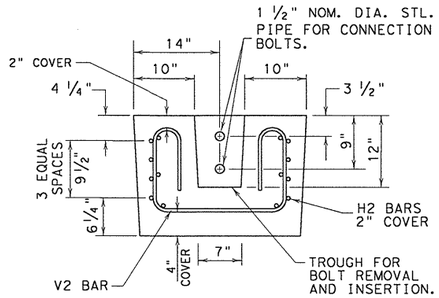

SECTION A-A

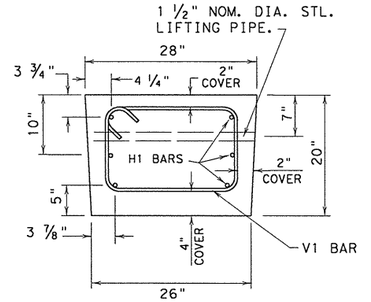

SECTION B-B

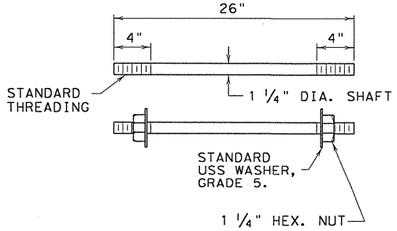

CONNECTION BOLT

FOR CONTRACTORS INFORMATION ONLY

(TYPE 1) APPROX. QUANTITIES 20 FT. SECTION		
CONCRETE	CY	2.6
REINFORCING STEEL	LBS	330
TOTAL BARRIER WT.	LBS	11000

GENERAL NOTES

1. BARRIER LENGTH SHALL BE 20 FEET (+/- 1 INCH) UNLESS OTHERWISE SPECIFIED IN THE PLANS.
2. ALL CONCRETE, REINFORCEMENT, ANCHOR BOLTS, BLOCKING, ETC., AS SHOWN ARE CONSIDERED AS PART OF THE BARRIER FOR PAYMENT.
3. ALL CONCRETE SHALL BE CLASS A, C, OR H, UNLESS OTHERWISE SPECIFIED.
4. ALL REINFORCING STEEL SHALL BE GRADE 40, UNLESS OTHERWISE SPECIFIED.
5. CHAMFER ALL EDGES 3/4 INCH, AS DIRECTED BY THE ENGINEER.
6. STEEL PIPE SHALL BE HOT DIP GALVANIZED IN CONFORMANCE TO ASTM DESIGNATION A123. BOLTS, NUTS AND WASHERS SHALL BE HOT-DIP GALVANIZED TO ASTM DESIGNATION A153.
7. BOLTS SHALL CONFORM TO ASTM A36. NUTS SHALL CONFORM TO A307 REQUIREMENTS AND SHALL BE TAPPED OR CHASED AFTER GALVANIZING. BOLTS AND NUTS SHALL HAVE CLASS 2A AND 2B FIT TOLERANCES.
8. THE BARRIER SHOULD BE LIGHT IN COLOR AND SHOULD BE SUPPLEMENTED BY DELINEATION AS DETAILED ELSEWHERE IN THE PLANS.

TEXAS DEPARTMENT OF TRANSPORTATION

LOW PROFILE CONCRETE BARRIER

(PORTABLE AND PRECAST)

LPCB(1)-92

SHEET 1 OF 2

© TxDOT SEPTEMBER 1992

MODIFICATIONS

FED.RD. DIV.NO.	STATE	FEDERAL AID PROJECT NO.				SHEET NO.
6	TEXAS	CC 337-1-29				63
STATE DIST. NO.	COUNTY		CONT.	SECT.	JOB	HIGHWAY NO.
AUS	WILLIAMSON		0337	01	029	SH 29

...\tcp\lpcb192.dgn 09/21/2004 11:19:39 AM

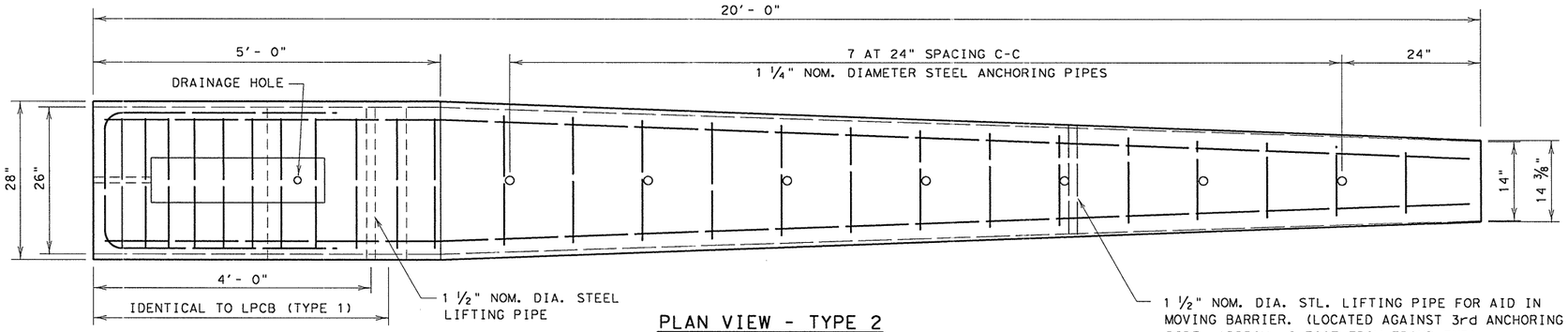

PLAN VIEW - TYPE 2

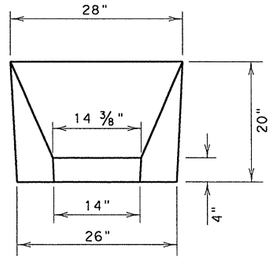

APPROACH VIEW

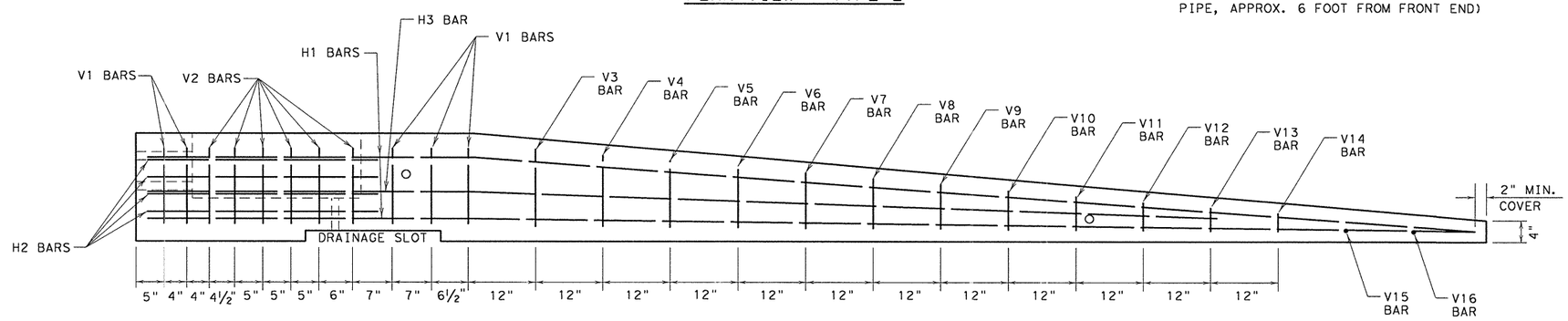

ELEVATION - TYPE 2

NOTE: ANCHORING PIPES NOT SHOWN IN ELEVATION.

GENERAL NOTES

1. TYPE 2 BARRIER SHALL BE USED AS AN END TREATMENT FOR TYPE 1 BARRIER WHEN APPROPRIATE.
2. THE ANCHORAGE PINS ARE ALL THE SAME LENGTH AND ARE INTENDED TO BE DRIVEN FLUSH WITH THE TOP OF THE BARRIER SURFACE.
3. THE BENDS IN THE H3 AND H1 BARS ARE SLIGHT, NO FORMAL BEND IS NECESSARY.
4. TYPE 2 BARRIER MUST BE LIFTED FROM REAR FIRST TO PREVENT CRACKING OF SLOPED SECTION.
5. SEE SHEET 1 OF 2 FOR ADDITIONAL INFORMATION.

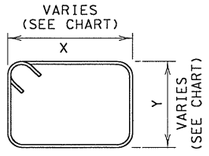

V 3-11 BARS (#4)

BAR (#4)	X (IN.)	Y (IN.)
V3 BAR	20 ¼	14 ½
V4 BAR	19 ½	13 ½
V5 BAR	18 ½	12 ¼
V6 BAR	17 ½	11 ¼
V7 BAR	17	10 ¼
V8 BAR	16 ¼	9
V9 BAR	15 ½	8
V10 BAR	14 ½	7
V11 BAR	13 ¾	6

NOTE: ALL BENDING OF SHEAR REBAR IS AT A 2" RADIUS, UNLESS SPECIFIED OTHERWISE.

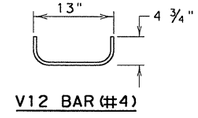

V12 BAR (#4)

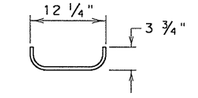

V13 BAR (#4)

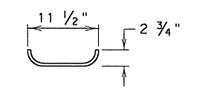

V14 BAR (#4)

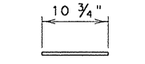

V15 BAR (#4)

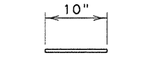

V16 BAR (#4)

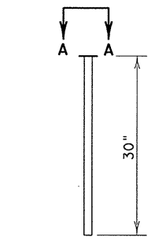

ANCHORING PIN
(1 ¼"DIA., A36 STL.)

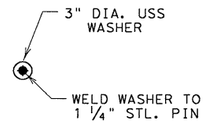

A-A
(HEAD OF ANCHORING PIN)

FOR CONTRACTORS INFORMATION ONLY

(TYPE 2) APPROX. QUANTITIES 20 FT. SECTION		
CONCRETE	CY	1.65
REINFORCING STEEL	LBS	240
TOTAL BARRIER WT.	LBS	7000

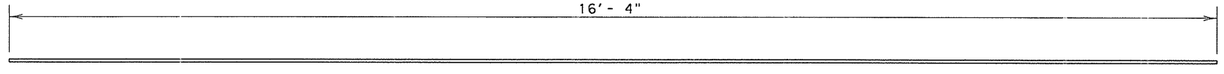

H3 BARS (#5)
(GRADE 60)

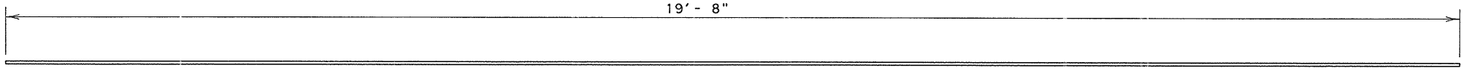

H1 BARS (#5)
(GRADE 60)

TEXAS DEPARTMENT OF TRANSPORTATION

LOW PROFILE CONCRETE BARRIER

(PORTABLE AND PRECAST)

LPCB(2)-92

SHEET 2 OF 2

© TxDOT SEPTEMBER 1992

MODIFICATIONS

FED.RD. DIV.NO.	STATE	FEDERAL AID PROJECT NO.				SHEET NO.
6	TEXAS	CC 337-1-29				64
STATE DIST.NO.	COUNTY		CONT.	SECT.	JOB	HIGHWAY NO.
AUS	WILLIAMSON		0337	01	029	SH 29

...\tcp\lpcb292.dgn 09/21/2004 11:19:39 AM

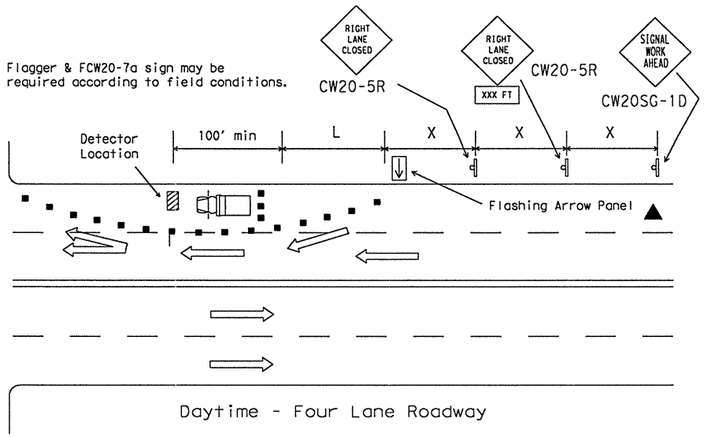

Daytime - Four Lane Roadway

Posted Speed	Formula	Minimum Desirable Taper Lengths ✻✻ 10' Offset	11' Offset	12' Offset	Suggested Maximum Spacing of Device On a Taper	On a Tangent	Minimum Sign Spacing X Distance
30		150'	165'	180'	30'	60'-75'	120'
35	$L=\frac{WS^2}{60}$	205'	225'	245'	35'	70'-90'	160'
40		265'	295'	320'	40'	80'-100'	240'
45		450'	495'	540'	45'	90'-110'	320'
50		500'	550'	600'	50'	100'-125'	400'
55		550'	605'	660'	55'	110'-140'	500'
60	L=WS	600'	660'	720'	60'	120'-150'	600'
65		650'	715'	780'	65'	130'-165'	700'
70		700'	770'	840'	70'	140'-175'	800'
75		750'	825'	900'	75'	150'-185'	900'

✻✻ Taper lengths have been rounded off.
L=Length of Taper (FT.) W=Width of Offset (FT.) S=Posted Speed (MPH)

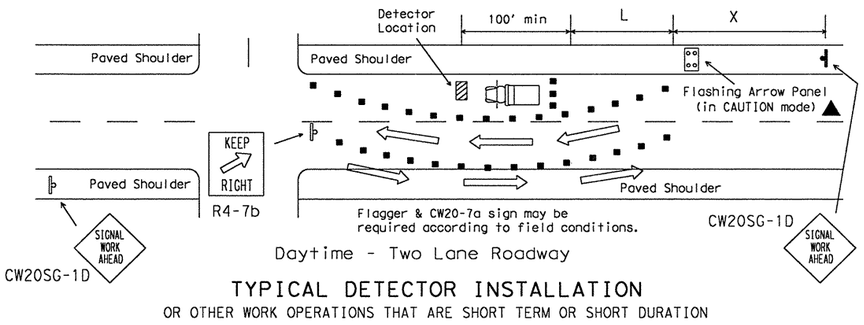

Daytime - Two Lane Roadway

TYPICAL DETECTOR INSTALLATION

OR OTHER WORK OPERATIONS THAT ARE SHORT TERM OR SHORT DURATION

Nighttime Channelizing Devices shall be reflectorized.

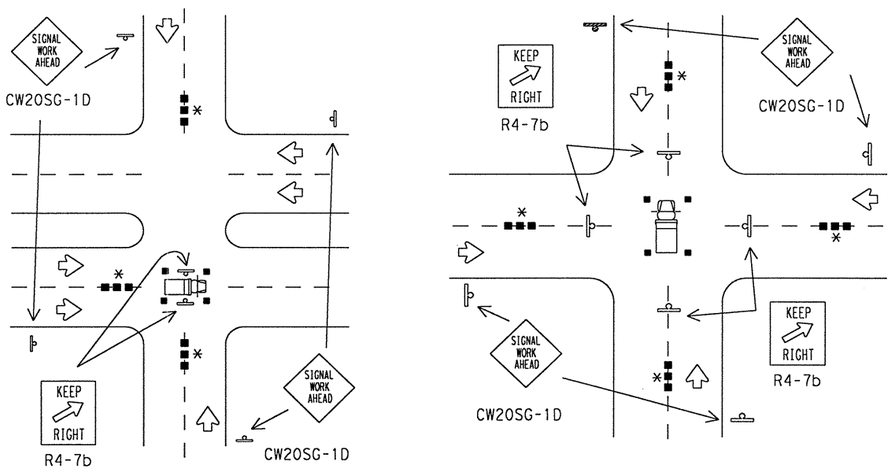

TYPICAL HANGING SIGNAL INSTALLATIONS

OR OTHER WORK OPERATIONS THAT ARE SHORT TERM OR SHORT DURATION

✻ Advance warning channelizing devices are optional.

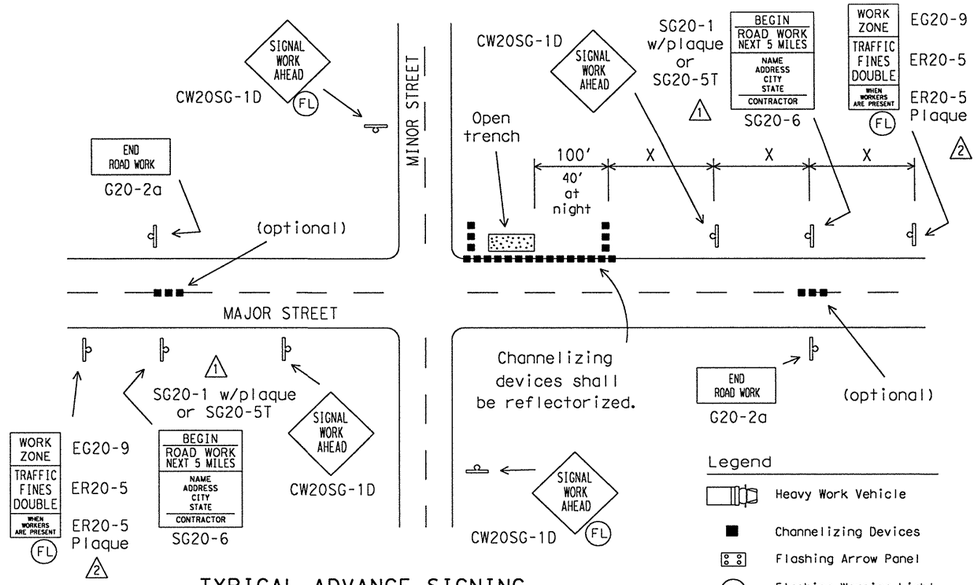

TYPICAL ADVANCE SIGNING

FOR LONG TERM and INTERMEDIATE-TERM STATIONARY WORK OPERATIONS

Observe Warning Signs State Law (R20-3) shall be required.
See BC(2).
Location will be as directed by the Engineer.

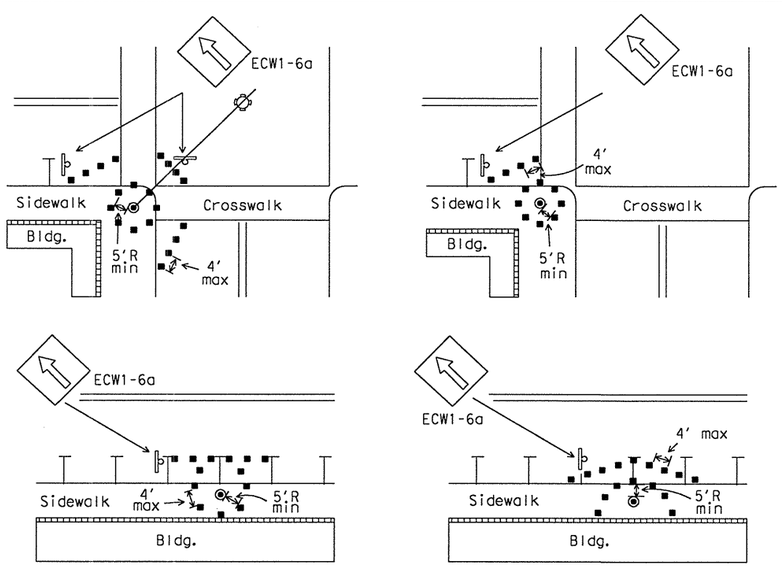

Channelizing devices should not be placed closer than 5 foot radius (minimum) to signal poles.
Parking may be eliminated by placing channelizing devices in spaces.
If pedestrian walkways are blocked, refer to the Texas Manual on Uniform Traffic Control Devices (TMUTCD) Part 6.

TYPICAL RESTRICTED PEDESTRIAN MOVEMENTS

FOR ALL WORK OPERATIONS REGARDLESS OF WORK DURATION

▲ The arrow panel may be omitted when stated elsewhere in the plans.

1. Typical channelizing device is the 28" cone.
2. Plastic drums or vertical panels may be used if approved by the Engineer.
3. For several closely adjoining projects, advance signing may not be required in advance of each intersection, but only in advance of the intersections at the project limits.
4. See details elsewhere in the plans for advance signing requirements.
5. Advance signs shall be in place when signal construction operations are in progress.
6. The contractor shall remove advance signs when no construction operations are underway.
7. Obstructions or hazards at the work area shall be clearly marked and delineated at all times.
8. All holes, trenches or other hazardous areas shall be adequately protected by lights or other protective devices.
9. Trenches shall be covered or surrounded with orange plastic construction fence as directed by the Engineer.
10. Flagger and FCW20-7a sign may be required according to field conditions.
11. Vehicles parked in roadway shall be equipped with two strobes.
12. High level flags at corners of vehicle may also be used.
13. Work operations that require work vehicle in traveled way 20 minutes or less may use cones, high level flags and strobes as advance warning devices.
14. Cones should only be placed around vehicle.
15. Flaggers may be used on high speed rural intersections.

STANDARD PLANS
Texas Department of Transportation
Traffic Operations Division

TRAFFIC SIGNAL INSTALLATION TYPICAL DETAILS

SHEET 1 OF 2 WZ(BTS-1)-03

©TxDOT April 1992

DN: GRB	CK: GRB	DW: FDN	CK: CAL

REVISIONS	STATE DISTRICT	FEDERAL REGION	FEDERAL AID PROJECT	SHEET
2-98	AUS	6	CC 337-1-29	65
4-98				
10-99	COUNTY		CONTROL SECTION JOB	HIGHWAY
3-03	WILLIAMSON		0337 01 029	SH 29

"ABOVE LANE" WORK PERFORMED BY BUCKET TRUCK

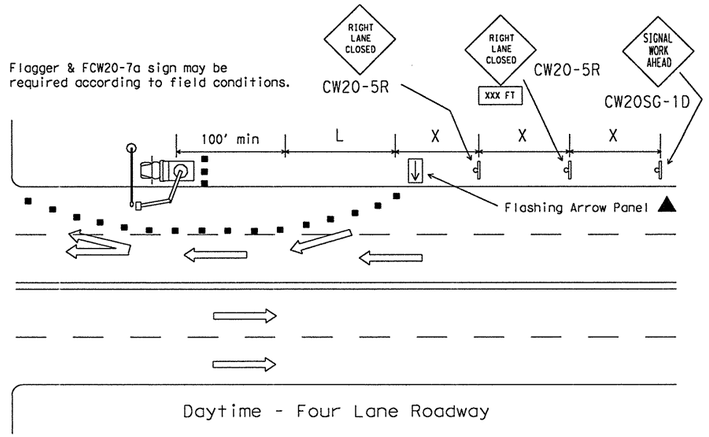

Daytime - Four Lane Roadway

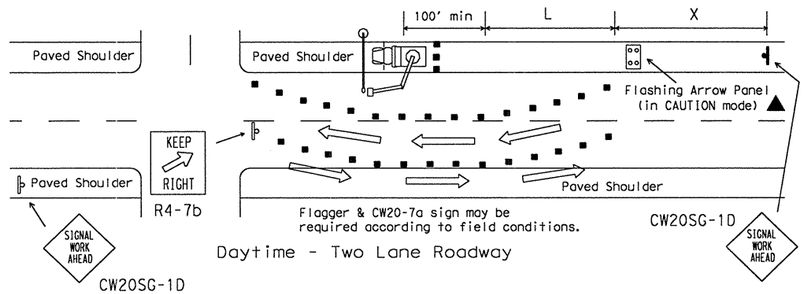

Daytime - Two Lane Roadway

▲ The arrow panel may be omitted when stated elsewhere in the plans.

"ABOVE TRUCK" WORK PERFORMED BY BUCKET TRUCK

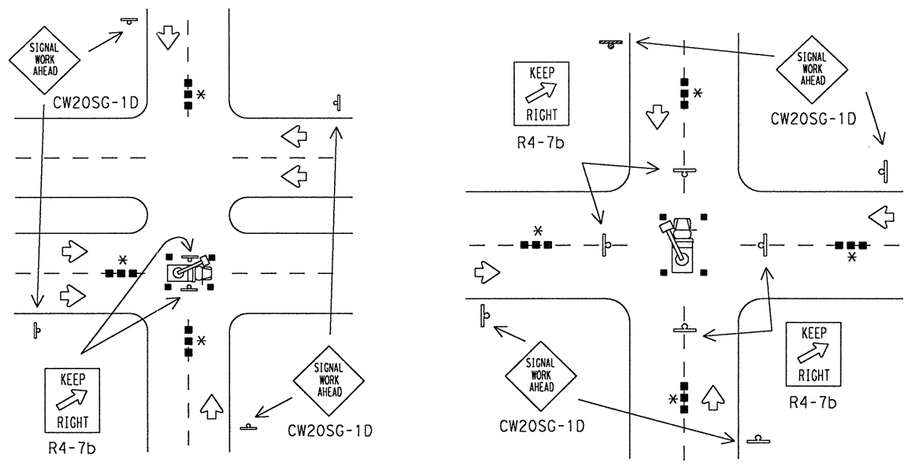

GENERAL NOTES FOR WORK ZONE SIGNS

1. Contractor shall install and maintain signs in a straight and plumb condition and/or as directed by the Engineer.
2. Wooden sign posts shall be painted white.
3. Barricades shall NOT be used as sign supports.
4. Nails shall NOT be used to attach signs to any support.
5. All signs shall be installed in accordance with the plans or as directed by the Engineer. Signs shall be used to regulate, warn, and guide the traveling public safely through the work zone.
6. The Contractor may furnish either the sign design shown in the plans or in the "Standard Highway Sign Designs for Texas" (SHSD). The Engineer/Inspector may require the Contractor to furnish other work zone signs that are shown in the "Texas Manual on Uniform Traffic Control Devices" (TMUTCD) but may have been omitted from the plans. Any variation in the plans shall be documented by written agreement between the Engineer and the Contractor's Responsible Person. All changes must be documented in writing before being implemented. This can include documenting the changes in the Inspector's TxDOT diary and having both the Inspector and Contractor initial and date the agreed upon changes. The additional signs requested by the Engineer/Inspector shall not be subsidiary.
7. The Contractor shall furnish sign supports listed in the "Compliant Work Zone Traffic Control Device List" (CWZTCD). The Contractor shall install the sign support in accordance with the manufacturer's recommendations. If there is a question regarding installation procedures, the Contractor shall furnish the Engineer a copy of the manufacturer's installation recommendations so that the Engineer can verify the correct procedures are being followed.
8. The contractor is responsible for sign installations and replacing signs with damaged or cracked substrates and/or damaged or marred reflective sheeting as directed by the Engineer/Inspector.
9. Identification markings may be shown only on the back of the sign substrate. The maximum height of letters and/or company logos used for identification shall be 1".
10. The Contractor shall replace damaged wood posts. New or damaged wood sign posts shall not be spliced.

Duration of Work (as defined by the TMUTCD Part 6)

The types of sign supports, the size of signs, and the type of sign substrates can vary based on the type of work being performed. The Engineer is responsible for selecting the appropriate size sign for the type of work being performed. The Contractor is responsible for ensuring that the sign support and substrate meets crashworthiness and length of work requirements.

a. Long-term stationary is work that occupies a location more than 3 days.
b. Intermediate-term stationary is work that occupies a location more than one daylight period up to 3 days, or nighttime work lasting more than 1 hour.
c. Short-term stationary is daytime work that occupies a location for more than 1 hour, but less than 12 hours.
d. Short duration is work that occupies a location up to 1 hour.
e. Mobile is work that moves intermittently or continuously.

SIGN MOUNTING HEIGHT

1. The bottom of Long-term/Intermediate-term signs shall be at least 7 feet, but not more than 9 feet, above the paved surface.
2. The bottom of Short-term/Short Duration signs shall be a minimum of 1 foot above the pavement surface but no more than 2 feet above the ground.
3. Long-term/Intermediate-term Signs may be used in lieu of Short-term/Short Duration signing.
4. Short-term/Short Duration signs shall be used only during daylight and shall be removed at the end of the workday.
5. Regulatory signs shall be mounted at least 7 feet, but not more than 9 feet, above the paved surface regardless of work duration.

REMOVING OR COVERING

1. When sign messages may be confusing or do not apply, the signs shall be removed or completely covered.
2. Long-term stationary or intermediate stationary signs installed on square metal tubing may be turned away from traffic 90 degrees when the sign message is not applicable. This type of sign support meets the crashworthiness standards regardless of the direction of impact. This technique may not be used for signs installed in the median of divided highways or near any intersections where the sign may be seen from approaching traffic.
3. Signs installed on skids shall not be turned at 90 degree angles to the roadway. These signs should be removed or completely covered when not required.
4. When signs are covered, the material used shall be opaque, such as heavy mil black plastic.
5. Burlap shall NOT be used to cover signs.
6. Duct tape or other adhesive material shall NOT be affixed to a sign face. These materials can damage the retroreflectivity of sign sheeting.
7. Signs shall be removed upon completion of the work.

SIGN SUPPORT WEIGHTS

1. Where sign supports require the use of weights to keep from turning over, the use of sandbags with dry, cohesionless sand is recommended.
2. The sandbags will be tied shut to keep the sand from spilling and to maintain a constant weight.
3. Rock, concrete, iron, steel or other solid objects will not be permitted for use as sign support weights.
4. Sandbags should weigh a minimum of 35 lbs and a maximum of 50 lbs.
5. Sandbags shall be made of a durable material that tears upon vehicular impact.
6. Rubber (such as tire inner tubes) shall NOT be used for sandbags.
7. Rubber ballasts (such as those used with cones or edgeline channelizers) shall NOT be used as sign support weights.
8. Sandbags shall only be placed along or laid over the base supports of the traffic control device and shall not be suspended above ground level or hung with rope, wire, chains or other fasteners. Sandbags shall be placed along the length of the skids to weigh down the sign support.
9. Sandbags shall NOT be placed under the skid and shall not be used to level sign supports placed on slopes.

Only pre-qualified products shall be used. A copy of the "Compliant Work Zone Traffic Control Devices List" (CWZTCD) describes pre-qualified products and their sources and may be obtained by contacting:

Standards Engineer
Traffic Operations Division - TE
Texas Department of Transportation
125 East 11th Street
Austin, Texas 78701-2483
Phone (512) 416-3120
Fax (512) 416-3299

Instructions to locate the "CWZTCD" on TxDOT website are:

Start at website - www.dot.state.tx.us
Click on "About TxDOT",
Click on "Organizational Chart",
Click on Traffic Operations Box,
Click on "Compliant Work Zone Traffic Control Devices",
Click on "View PDF".
This site is printable.

DEPARTMENTAL MATERIAL SPECIFICATIONS

PLYWOOD SIGN BLANKS	DMS-7100
ALUMINUM SIGN BLANKS	DMS-7110
FLAT SURFACE REFLECTIVE SHEETING	DMS-8300
FLEXIBLE ROLL-UP REFLECTIVE SIGNS	DMS-8310
VINYL NON-REFLECTIVE SHEETING	DMS-8320

COLOR	USAGE	SHEETING MATERIAL
ORANGE	BACKGROUND	TYPE E (FLUORESCENT PRISMATIC)
WHITE	BACKGROUND	TYPE C (HIGH SPECIFIC INTENSITY)
WHITE	LEGEND & BORDERS	TYPE C (HIGH SPECIFIC INTENSITY)
BLACK	LEGEND & BORDERS	VINYL NON-REFLECTIVE SHEETING

STANDARD PLANS
TEXAS DEPARTMENT OF TRANSPORTATION
Traffic Operations Division

TRAFFIC SIGNAL INSTALLATION BARRICADES AND SIGNS

SHEET 2 OF 2 **WZ(BTS-2)-03**

©TxDOT April 1992 DN: GRB CK: GRB DW: FDN CK: CAL

REVISIONS	STATE DISTRICT	FEDERAL REGION	FEDERAL AID PROJECT	SHEET
2-98				
4-98	AUS	6	CC 337-1-29	66
10-99				
3-03	COUNTY	CONTROL	SECTION	JOB	HIGHWAY
	WILLIAMSON	0337	01	029	SH 29

...\txdot standards\tcp\wz.dgn 09/21/2004 11:19:44 AM

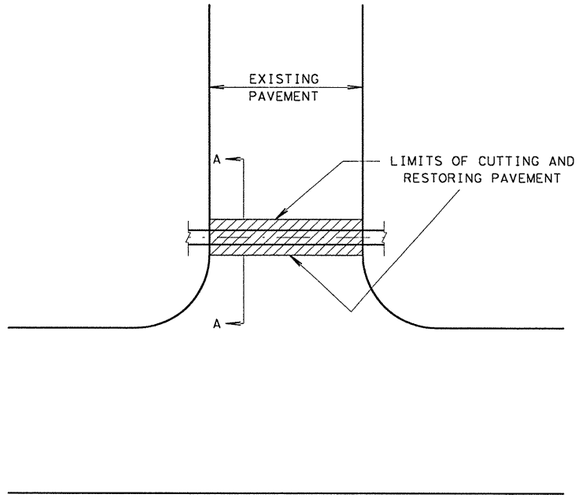

PLAN VIEW
N.T.S.

TABLE OF STANDARD EXCAVATION WIDTHS FOR RC PIPE			
PIPE		x	WIDTH OF CUTTING AND RESTORING PAVEMENT
ID	OD		
18"	22 ½"	1'	3.88'
24"	29 ½"	1'	4.46'
30"	37"	1'	5.08'
36"	44"	1'	5.67'
42"	51"	1'	6.25'
48"	58"	2'	8.83'
54"	65"	2'	9.42'
60"	72"	2'	10.00'
66"	79"	2'	10.58'
72"	86"	2'	11.17'
78"	93"	2'	11.75'
84"	100"	2'	12.33'
96"	114"	2'	13.50'

WIDTH OF CUTTING AND RESTORING PAVEMENT FOR INSTALLATION OF STORM DRAIN STRUCTURES SHALL BE TAKEN AS THE OVERALL WIDTH OF THE STRUCTURE PLUS:

- 2 FEET FOR STRUCTURES WITH AN INSIDE DIMENSION OF 42" OR LESS OR,
- 4 FEET FOR STRUCTURES WITH AN INSIDE DIMENSION GREATER THAN 42".

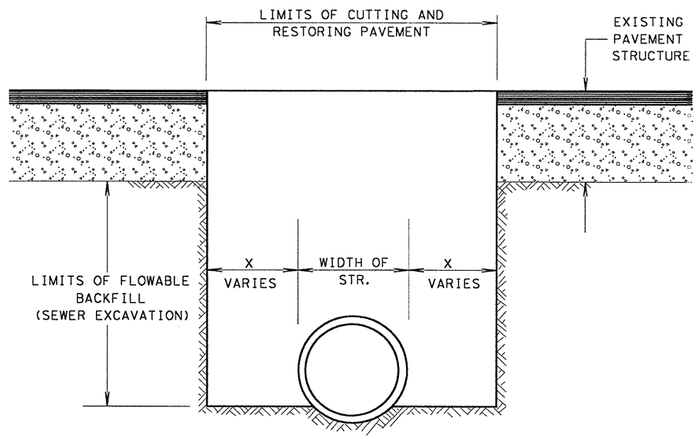

SECTION A-A
N.T.S.

GENERAL NOTES:

ANY WORK PERFORMED OR DAMAGE TO THE EXISTING PAVEMENT OUTSIDE THE LIMITS SHOWN WILL NOT BE PAID FOR AND SHALL BE REPAIRED AT THE SOLE EXPENSE OF THE CONTRACTOR.

REPLACEMENT MATERIAL SHALL BE AN ASPHALT STABILIZED PAVING MATERIAL, FLOWABLE BACKFILL OR CLASS A CONCRETE AS REQUIRED BY EXISTING CONDITIONS OR AN EQUIVALENT MATERIAL APPROVED BY THE ENGINEER. THE THICKNESS OF THE REPLACEMENT MATERIAL(S) SHALL BE EQUIVALENT TO THE THICKNESS OF THE EXISTING PAVEMENT STRUCTURE.

PAYMENT FOR CUTTING AND RESTORING PAVEMENT AS SHOWN SHALL BE MADE AT THE UNIT PRICE BID FOR "CUTTING AND RESTORING PAVEMENT".

CUTTING AND RESTORING PAVEMENT DETAILS

AUSTIN DISTRICT

© 1998 TxDOT

ORIGINAL DRAWING: cutnrese.dgn		FED.RD. DIV.NO.	PROJECT NO.		SHEET NO.
DATE	REVISIONS	6	CC 337-1-29		67
10/98	District Update	STATE	STATE DIST.NO.	COUNTY	
		TEXAS	AUS	WILLIAMSON	
		CONT.	SECT.	JOB	HIGHWAY NO.
		0337	01	029	SH 29

...\tcp\cutnrese.dgn 09/21/2004 11:19:39 AM

Beginning chain CLSH29W description

Point 100 N 10,204,917.11 E 3,121,744.82 Sta 127+54.29

Course from 100 to PC CLSH29W-1 N 87° 39' 01.31" E Dist 2,016.80

Curve Data

Curve CLSH29W-1
P.I. Station 148+18.58 N 10,205,001.74 E 3,123,807.37
Delta = 5° 26' 15.45" (LT)
Degree = 5° 43' 46.48"
Tangent = 47.49
Length = 94.90
Radius = 1,000.00
External = 1.13
Long Chord = 94.87
Mid. Ord. = 1.13
P.C. Station 147+71.09 N 10,204,999.79 E 3,123,759.93
P.T. Station 148+66.00 N 10,205,008.18 E 3,123,854.42
C.C. N 10,205,998.95 E 3,123,718.93
Back = N 87° 39' 01.31" E
Ahead = N 82° 12' 45.86" E
Chord Bear = N 84° 55' 53.59" E

Course from PT CLSH29W-1 to PC CLSH29W-2 S 82° 12' 45.77" W Dist 0.00

Curve Data

Curve CLSH29W-2
P.I. Station 149+13.49 N 10,205,014.61 E 3,123,901.47
Delta = 5° 26' 15.48" (RT)
Degree = 5° 43' 46.48"
Tangent = 47.49
Length = 94.90
Radius = 1,000.00
External = 1.13
Long Chord = 94.87
Mid. Ord. = 1.13
P.C. Station 148+66.00 N 10,205,008.18 E 3,123,854.42
P.T. Station 149+60.90 N 10,205,016.56 E 3,123,948.92
C.C. N 10,204,017.40 E 3,123,989.92
Back = N 82° 12' 45.86" E
Ahead = N 87° 39' 01.34" E
Chord Bear = N 84° 55' 53.60" E

Course from PT CLSH29W-2 to PC CLSH29W-3 N 87° 39' 01.34" E Dist 3,173.20

Curve Data

Curve CLSH29W-3
P.I. Station 181+81.59 N 10,205,148.60 E 3,127,166.90
Delta = 5° 26' 15.28" (RT)
Degree = 5° 43' 46.48"
Tangent = 47.49
Length = 94.90
Radius = 1,000.00
External = 1.13
Long Chord = 94.87
Mid. Ord. = 1.13
P.C. Station 181+34.10 N 10,205,146.65 E 3,127,119.45
P.T. Station 182+29.01 N 10,205,146.04 E 3,127,214.32
C.C. N 10,204,147.49 E 3,127,160.45
Back = N 87° 39' 01.34" E
Ahead = S 86° 54' 43.38" E
Chord Bear = S 89° 37' 51.02" E

Course from PT CLSH29W-3 to PC CLSH29W-4 S 86° 54' 43.07" E Dist 0.00

BEARING BASIS:
ALL BEARINGS ARE BASED ON GRID BEARINGS. DISTANCES ARE SURFACE DISTANCES. COORDINATES ARE SURFACE VALUES BASED ON THE TEXAS STATE PLANE COORDINATE SYSTEM, NAD (83), CENTRAL ZONE USING A COMBINED SURFACE ADJUSTMENT FACTOR OF 1.00013.

Curve Data

Curve CLSH29W-4
P.I. Station 182+76.50 N 10,205,143.48 E 3,127,261.74
Delta = 5° 26' 15.28" (LT)
Degree = 5° 43' 46.48"
Tangent = 47.49
Length = 94.90
Radius = 1,000.00
External = 1.13
Long Chord = 94.87
Mid. Ord. = 1.13
P.C. Station 182+29.01 N 10,205,146.04 E 3,127,214.32
P.T. Station 183+23.91 N 10,205,145.43 E 3,127,309.19
C.C. N 10,206,144.59 E 3,127,268.19
Back = S 86° 54' 43.38" E
Ahead = N 87° 39' 01.33" E
Chord Bear = S 89° 37' 51.02" E

Course from PT CLSH29W-4 to 125 N 87° 39' 01.33" E Dist 1,076.09

Point 125 N 10,205,189.54 E 3,128,384.37 Sta 194+00.00

Ending chain CLSH29W description

Beginning chain BLN265W description

Point 220 N 10,205,058.85 E 3,124,979.68 Sta 10+00.00

Course from 220 to PC BLN265W-1 N 2° 20' 58.66" W Dist 243.00

Curve Data

Curve BLN265W-1
P.I. Station 13+35.46 N 10,205,394.03 E 3,124,965.93
Delta = 26° 01' 47.04" (LT)
Degree = 14° 19' 26.20"
Tangent = 92.46
Length = 181.72
Radius = 400.00
External = 10.55
Long Chord = 180.16
Mid. Ord. = 10.28
P.C. Station 12+43.00 N 10,205,301.65 E 3,124,969.72
P.T. Station 14+24.72 N 10,205,475.37 E 3,124,921.98
C.C. N 10,205,285.25 E 3,124,570.06
Back = N 2° 20' 58.66" W
Ahead = N 28° 22' 45.70" W
Chord Bear = N 15° 21' 52.18" W

Course from PT BLN265W-1 to PC BLN265W-2 S 28° 22' 43.48" E Dist 0.00

Curve Data

Curve BLN265W-2
P.I. Station 15+17.18 N 10,205,556.72 E 3,124,878.04
Delta = 26° 01' 47.05" (RT)
Degree = 14° 19' 26.20"
Tangent = 92.46
Length = 181.72
Radius = 400.00
External = 10.55
Long Chord = 180.16
Mid. Ord. = 10.28
P.C. Station 14+24.72 N 10,205,475.37 E 3,124,921.98
P.T. Station 16+06.44 N 10,205,649.09 E 3,124,874.25
C.C. N 10,205,665.49 E 3,125,273.91
Back = N 28° 22' 45.70" W
Ahead = N 2° 20' 58.65" W
Chord Bear = N 15° 21' 52.18" W

Course from PT BLN265W-2 to 235 N 2° 20' 58.65" W Dist 195.15

Point 235 N 10,205,844.08 E 3,124,866.25 Sta 18+01.59

Ending chain BLN265W description

Beginning chain BLS265W description

Point 200 N 10,204,558.53 E 3,124,982.20 Sta 5+00.00

Course from 200 to 205 N 2° 20' 58.69" W Dist 500.00

Point 205 N 10,205,058.11 E 3,124,961.70 Sta 10+00.00

Ending chain BLS265W description

Beginning chain CLCR265E description

Point 250 N 10,205,117.09 E 3,126,398.93 Sta 10+00.00

Course from 250 to 255 N 2° 20' 58.66" W Dist 510.51

Point 255 N 10,205,627.17 E 3,126,378.00 Sta 15+10.51

Ending chain CLCR265E description

STATE OF TEXAS
JAMES J. ROOHMS
83383
LICENSED
PROFESSIONAL ENGINEER
4/22/2004

NO.	REVISION	BY	DATE

CP&Y Chiang, Patel & Yerby, Inc.

© 2004

Texas Department of Transportation

SH 29

HORIZONTAL ALIGNMENT DATA SHEET

		FED. ROAD DIV. NO.	STATE	FEDERAL AID PROJECT NO.			SHEET NO.
Designed:	TWL	6	TEXAS	CC 337-1-29			68
Checked:	JJR	STATE DIST. NO.	COUNTY	CONTROL NO.	SECTION NO.	JOB NO.	HIGHWAY NO.
Drawn:	TWL	14	WILLIAMSON	0337	01	029	SH 29
Checked:	JJR						

Beginning chain BLSBFR description

Point 400 N 10,207,620.64 E 3,128,203.93 Sta 54+85.77

Course from 400 to PC BLSBFR-1 S 21° 02' 08.69" W Dist 136.62

Curve Data

Curve BLSBFR-1
P.I. Station 60+21.86 N 10,207,120.27 E 3,128,011.50
Delta = 7° 37' 05.60" (LT)
Degree = 0° 57' 17.75"
Tangent = 399.48
Length = 797.78
Radius = 6,000.00
External = 13.28
Long Chord = 797.19
Mid. Ord. = 13.25
P.C. Station 56+22.38 N 10,207,493.13 E 3,128,154.89
P.T. Station 64+20.16 N 10,206,731.70 E 3,127,918.80
C.C. N 10,205,339.43 E 3,133,755.03
Back = S 21° 02' 08.69" W
Ahead = S 13° 25' 03.09" W
Chord Bear = S 17° 13' 35.89" W

Course from PT BLSBFR-1 to PC BLSBFR-2 S 13° 25' 03.09" W Dist 1,779.41

Curve Data

Curve BLSBFR-2
P.I. Station 89+61.09 N 10,204,260.12 E 3,127,329.19
Delta = 28° 29' 10.83" (LT)
Degree = 1° 54' 35.49"
Tangent = 761.52
Length = 1,491.54
Radius = 3,000.00
External = 95.14
Long Chord = 1,476.23
Mid. Ord. = 92.22
P.C. Station 81+99.57 N 10,205,000.86 E 3,127,505.89
P.T. Station 96+91.11 N 10,203,524.79 E 3,127,527.17
C.C. N 10,204,304.72 E 3,130,424.01
Back = S 13° 25' 03.09" W
Ahead = S 15° 04' 07.74" E
Chord Bear = S 0° 49' 32.33" E

Course from PT BLSBFR-2 to PC BLSBFR-3 S 15° 04' 07.74" E Dist 1,344.36

Ending chain BLSBFR description

Beginning chain DETOURA description

Point 600 N 10,205,058.11 E 3,124,961.70 Sta 1+00.00

Course from 600 to PC DETOURA-1 N 2° 20' 58.63" W Dist 128.69

Curve Data

Curve DETOURA-1
P.I. Station 2+79.28 N 10,205,237.25 E 3,124,954.35
Delta = 19° 08' 43.96" (LT)
Degree = 19° 05' 54.94"
Tangent = 50.59
Length = 100.25
Radius = 300.00
External = 4.24
Long Chord = 99.78
Mid. Ord. = 4.18
P.C. Station 2+28.69 N 10,205,186.69 E 3,124,956.42
P.T. Station 3+28.93 N 10,205,284.32 E 3,124,935.81
C.C. N 10,205,174.39 E 3,124,656.67
Back = N 2° 20' 58.63" W
Ahead = N 21° 29' 42.59" W
Chord Bear = N 11° 55' 20.61" W

Course from PT DETOURA-1 to 602 N 21° 29' 42.47" W Dist 0.00

Point 602 N 10,205,284.32 E 3,124,935.81 Sta 3+28.93

Ending chain DETOURA description

BEARING BASIS:
ALL BEARINGS ARE BASED ON GRID BEARINGS. DISTANCES ARE SURFACE DISTANCES. COORDINATES ARE SURFACE VALUES BASED ON THE TEXAS STATE PLANE COORDINATE SYSTEM, NAD (83), CENTRAL ZONE USING A COMBINED SURFACE ADJUSTMENT FACTOR OF 1.00013.

STATE OF TEXAS
JAMES J. ROOHMS
83383
LICENSED
PROFESSIONAL ENGINEER
9/22/2004

NO.	REVISION	BY	DATE

Chiang, Patel & Yerby, Inc.

© 2004

Texas Department of Transportation

SH 29

HORIZONTAL ALIGNMENT DATA SHEET

		FED. ROAD DIV. NO.	STATE	FEDERAL AID PROJECT NO.				SHEET NO.
Designed:	TWL	6	TEXAS	CC 337-1-29				69
Checked:	JJR	STATE DIST. NO.	COUNTY		CONTROL NO.	SECTION NO.	JOB NO.	HIGHWAY NO.
Drawn:	TWL	14	WILLIAMSON		0337	01	029	SH 29
Checked:	JJR							

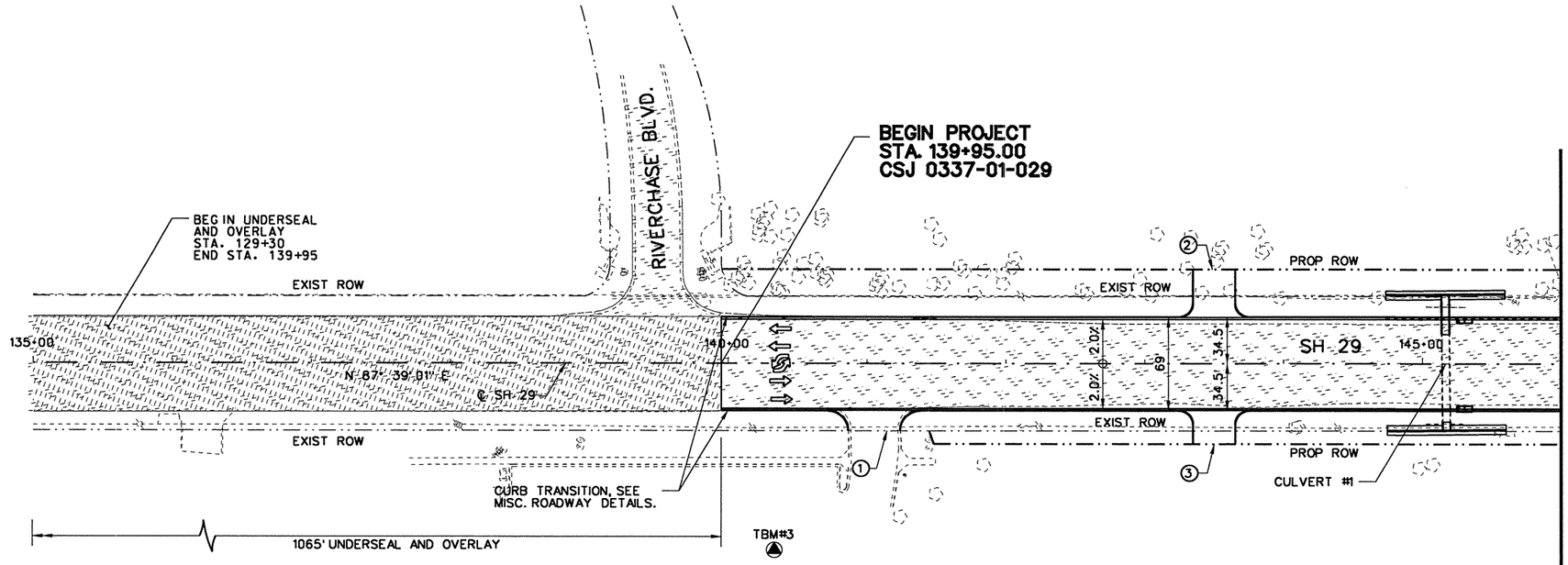

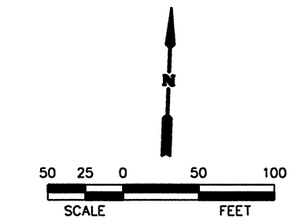

NOTES:

1. ALL DIMENSIONS ARE TO LIP OF GUTTER UNLESS OTHERWISE NOTED.
2. ALL STATIONING BASED ON ℄ SH 29 UNLESS OTHERWISE NOTED.
3. CONTRACTOR SHALL VERIFY DRIVEWAY LOCATIONS IN THE FIELD PRIOR TO CONSTRUCTION. SEE DRIVEWAY DETAIL SHEETS FOR FURTHER INFORMATION.
4. EXISTING GROUND PROFILE SHOWN IS AT THE PGL OF PROPOSED ROADWAY UNLESS OTHERWISE NOTED.
5. SEE INTERSECTION LAYOUTS FOR ADDITIONAL CROSS STREET INFORMATION.

LEGEND:

(#) PROPOSED DRIVEWAY DESIGNATION

EXISTING PAVEMENT

2" UNDERSEAL AND OVERLAY

VERTICAL CONTROL BENCHMARK

TBM #	ELEV.	STA.	OFFSET	DESCRIPTION
TBM#3	831.88	140+33.20	138.73 RT	TRIANGLE CUT IN TOP OF CONCRETE STANDARD FOR LIGHT POLE IN EAST PARKING AREA OF FIRST BAPTIST CHURCH.

																			EST.	FINAL	UNIT	DESCRIPTION
										21	249	303	344	398	410	347	229	136	83	52	61	97	2730		CY	EXCAVATION
										0	32	28	37	54	58	78	45	97	270	344	372	324	1739		CY	EMBANKMENT (TY B) (ORD COMP)

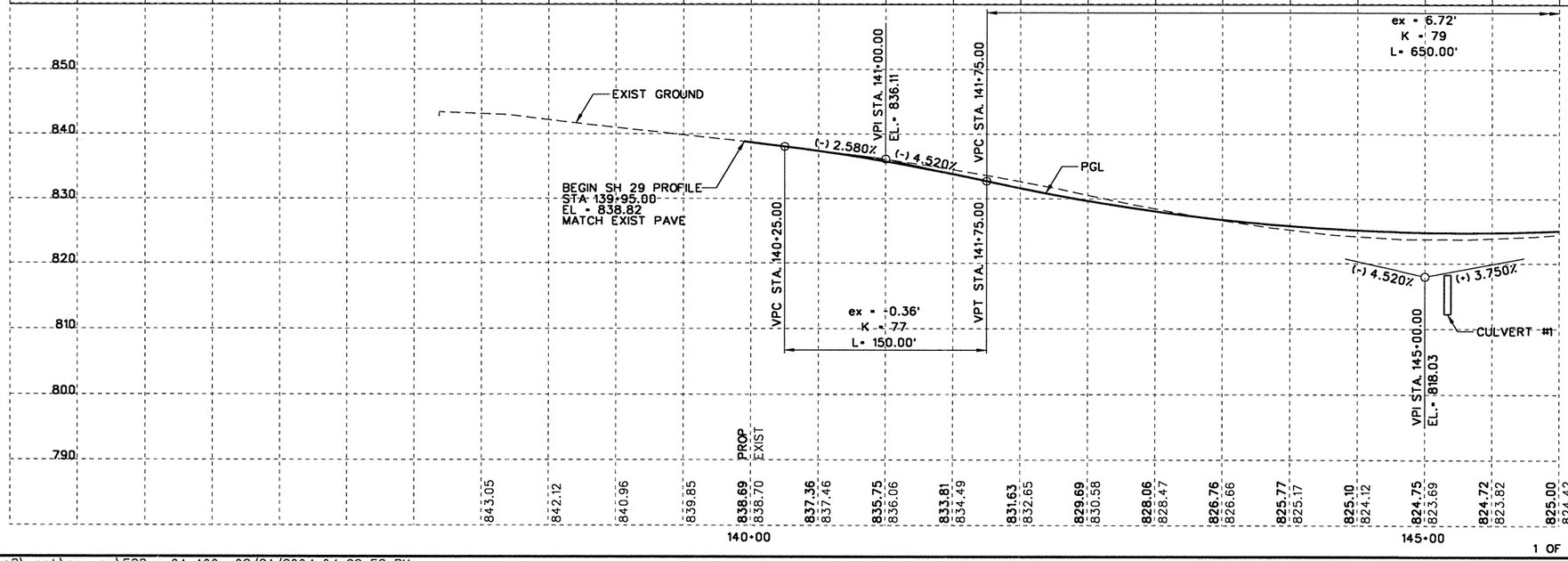

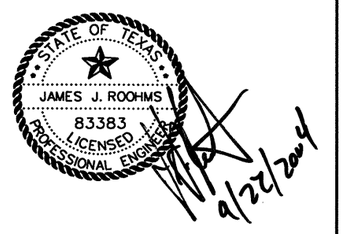

NO.	REVISION	BY	DATE

CP&Y Chiang, Patel & Yerby, Inc.

© 2004

Texas Department of Transportation

SH 29

ROADWAY PLAN & PROFILE

BEGIN PROJECT TO STA. 146+00

		FED. ROAD DIV. NO.	STATE	FEDERAL AID PROJECT NO.				SHEET NO.
Designed:	JWP	6	TEXAS	CC 337-1-29				10
Checked:	JJR	STATE DIST. NO.	COUNTY	CONTROL NO.	SECTION NO.	JOB NO.	HIGHWAY NO.	
Drawn:	KGM	14	WILLIAMSON	0337	01	029	SH 29	
Checked:	JJR							

POINT	℄ OR ℬ	STATION	OFFSET	DESC
A	SH 29	147+32.03	33.00' LT	PC
B	SH 29	148+67.62	37.38' LT	PRC
C	SH 29	149+90.72	41.96' LT	PT
D	SH 29	154+79.95	42.00' RT	PC
E	SH 29	155+34.01	45.25' RT	PT
F	SH 29	155+93.25	52.39' RT	PC
G	SH 29	156+20.01	54.00' RT	PT

POINT	℄ OR ℬ	STATION	OFFSET	DESC
H	SH 29	156+20.01	8.00' LT	PT
I	SH 29	155+73.67	4.05' LT	PC
J	SH 29	155+03.45	8.03' RT	PT
K	SH 29	154+10.01	16.00' RT	PC
L	SH 29	150+67.75	16.00' RT	PC
M	SH 29	150+51.75	0.00'	
N	SH 29	150+67.75	16.00' LT	PT

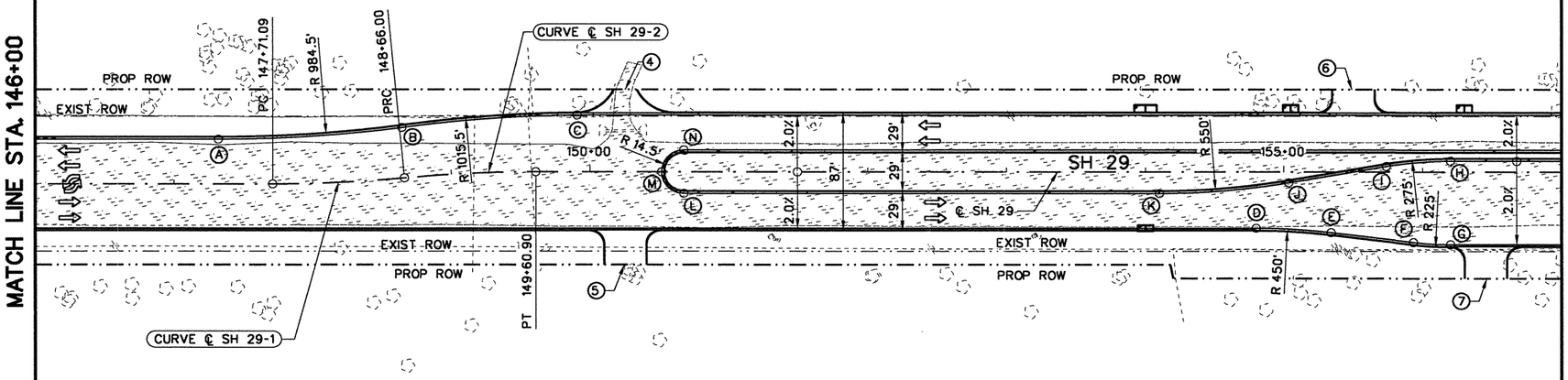

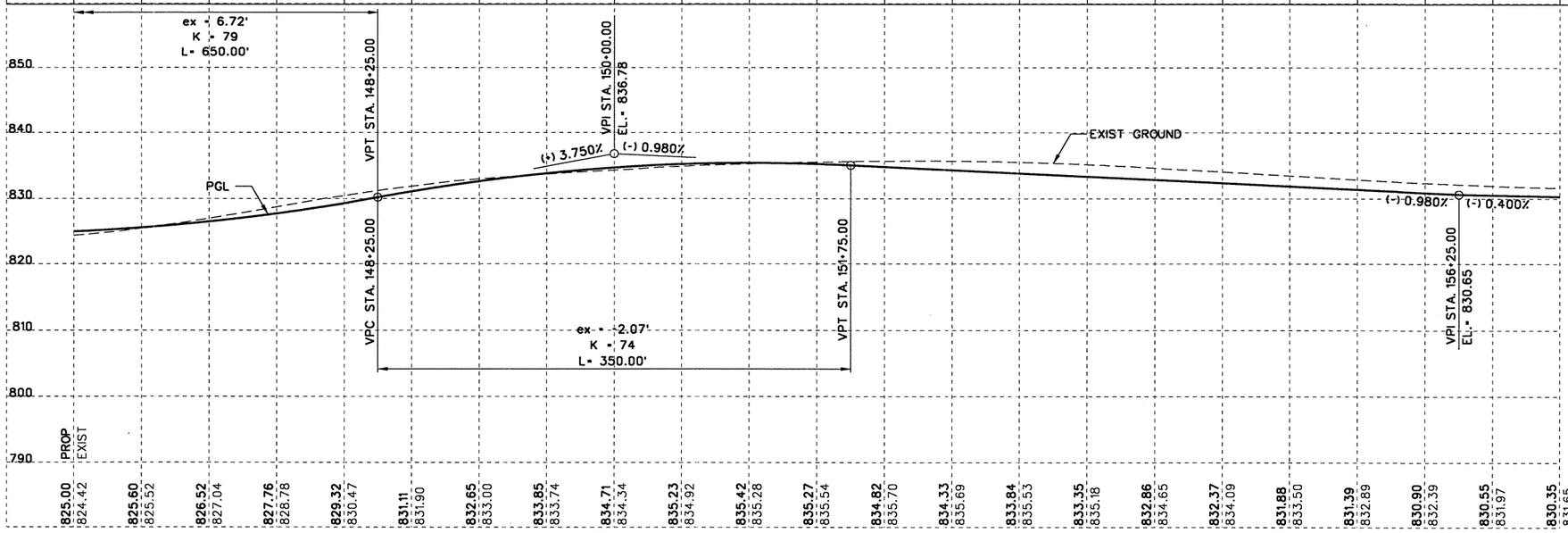

	154	236	329	392	387	337	272	208	182	165	170	240	327	407	445	440	422	406	421	466	484	467
	198	117	74	51	37	37	49	59	31	39	59	36	21	6	0	0	0	1	7	21	15	15

EST.	FINAL	UNIT	DESCRIPTION
7357		CY	EXCAVATION
873		CY	EMBANKMENT (TY B) (ORD COMP)

NOTES:

1. SEE SHEET 1 OF 8.

LEGEND:

(#) PROPOSED DRIVEWAY DESIGNATION

EXISTING PAVEMENT

CURVE ℄ SH 29-1
PI STATION = 148+18.58
NORTHING = 10,205,001.7413
EASTING = 3,123,807.3732
DELTA = 5° 26' 15" (LT)
RADIUS = 1,000.00'
D = 5° 43' 46"
TANGENT = 47.49'
LENGTH = 94.90'

CURVE ℄ SH 29-2
PI STATION = 149+13.49
NORTHING = 10,205,014.6100
EASTING = 3,123,901.4726
DELTA = 5° 26' 15" (RT)
RADIUS = 1,000.00'
D = 5° 43' 46"
TANGENT = 47.49'
LENGTH = 94.90'

STATE OF TEXAS
JAMES J. ROOHMS
83383
LICENSED
PROFESSIONAL ENGINEER
9/22/2004

NO.	REVISION	BY	DATE

CP&Y Chiang, Patel & Yerby, Inc.

© 2004

Texas Department of Transportation

SH 29

ROADWAY PLAN & PROFILE
STA. 146+00 TO STA. 157+00

Designed:	JWP	FED. ROAD DIV. NO.	STATE	FEDERAL AID PROJECT NO.			SHEET NO.
Checked:	JJR	6	TEXAS	CC 337-1-29			11
Drawn:	KGM	STATE DIST. NO.	COUNTY	CONTROL NO.	SECTION NO.	JOB NO.	HIGHWAY NO.
Checked:	JJR	14	WILLIAMSON	0337	01	029	SH 29

...\wa3\WEST\Common\533Wpp02.100 9/21/2004 10:50:34 PM

POINT	℄ OR ℬ	STATION	OFFSET	DESC
A	SH 29	162+78.52	54.00' LT	PC
B	SH 29	163+05.27	52.39' LT	PT
C	SH 29	163+64.51	45.25' LT	PC
D	SH 29	164+18.57	42.00' LT	PT
E	SH 29	163+59.16	8.00' RT	PC
F	SH 29	164+05.50	4.05' RT	PT
G	SH 29	164+75.71	8.03' LT	PC
H	SH 29	165+69.16	16.00' LT	PT

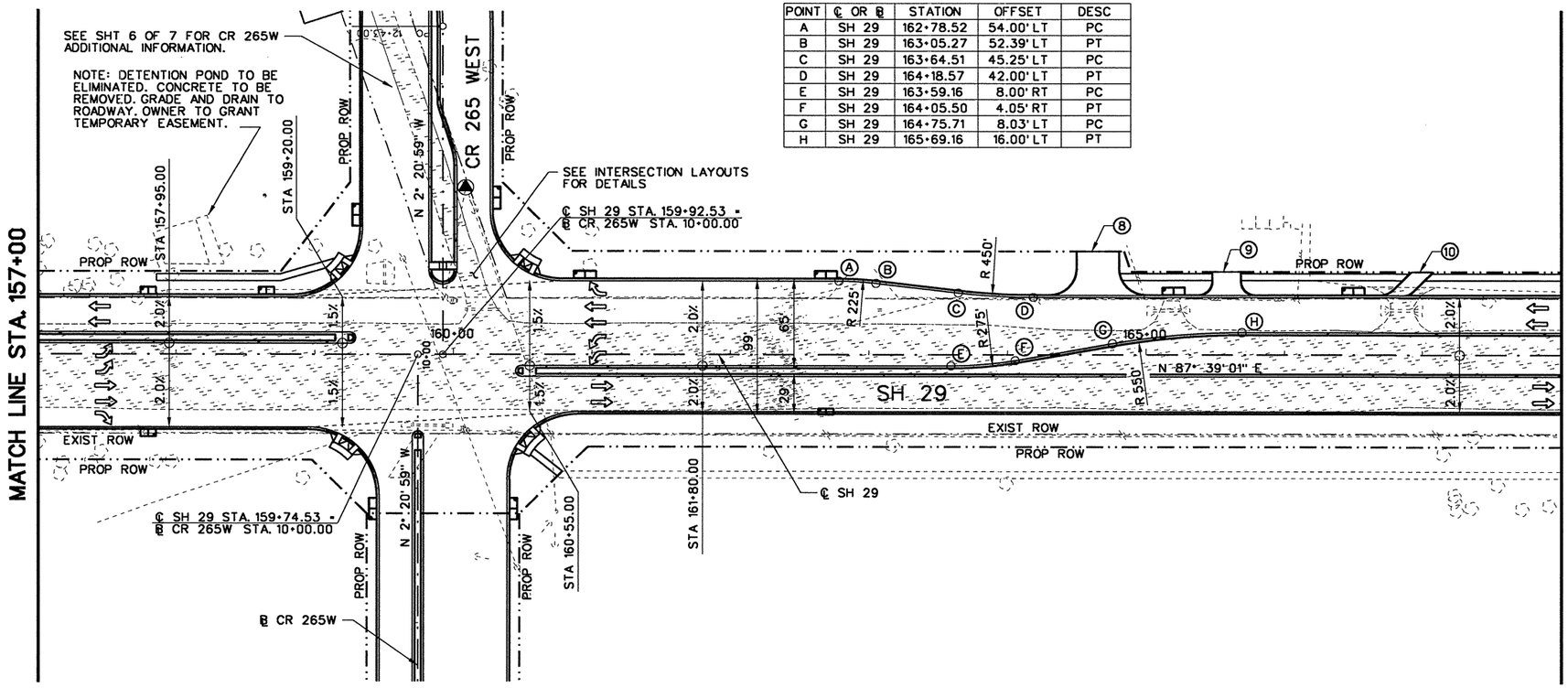

50 25 0 50 100
SCALE FEET

NOTES:
1. SEE SHEET 1 OF 8.

LEGEND:
(#) PROPOSED DRIVEWAY DESIGNATION
EXISTING PAVEMENT

	458	453	430	388	358	347	340	352	377	390	387	389	366	316	279	239	207	196	197	205	212	218
	28	27	30	16	0	0	0	19	37	37	40	44	45	45	48	48	47	48	49	45	40	40

EST.	FINAL	UNIT	DESCRIPTION
7104		CY	EXCAVATION
733		CY	EMBANKMENT (TY B) (ORD COMP)

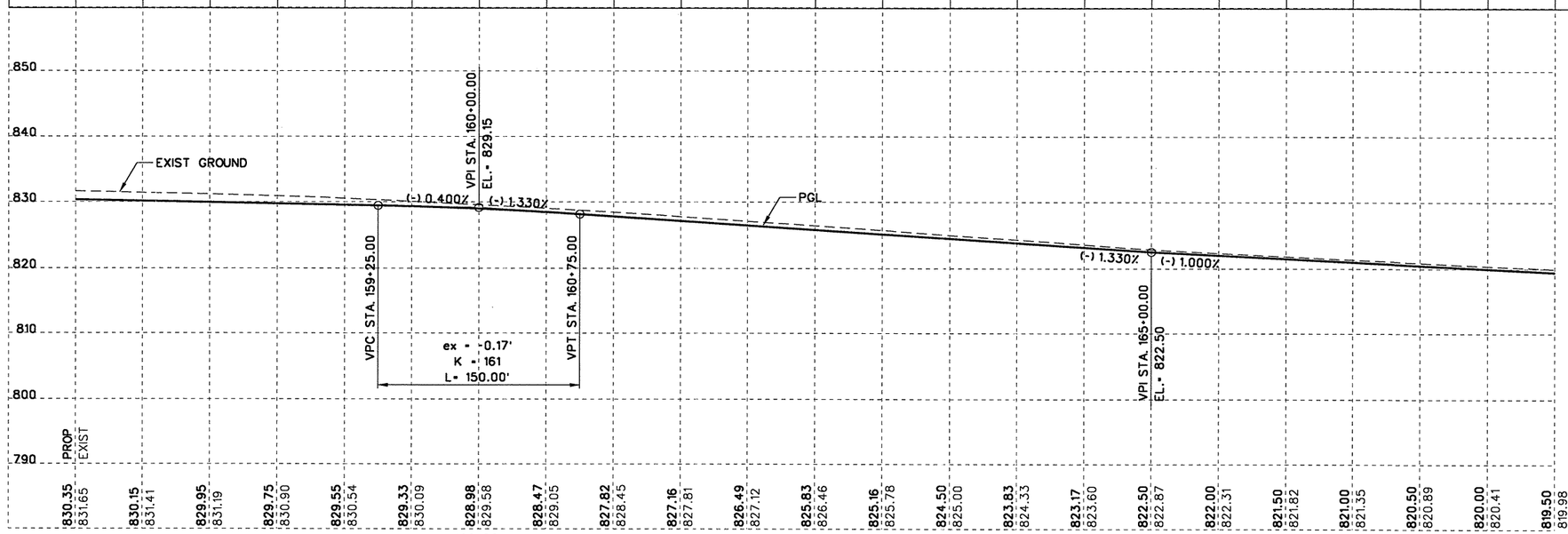

STATE OF TEXAS
JAMES J. ROOHMS
83383
LICENSED
PROFESSIONAL ENGINEER
9/24/2004

NO.	REVISION	BY	DATE

CP&Y Chiang, Patel & Yerby, Inc.

© 2004

Texas Department of Transportation

SH 29

ROADWAY PLAN & PROFILE
STA. 157+00 TO STA. 168+00

		FED. ROAD DIV. NO.	STATE	FEDERAL AID PROJECT NO.				SHEET NO.
Designed:	JWP	6	TEXAS	CC 337-1-29				72
Checked:	JJR	STATE DIST. NO.	COUNTY	CONTROL NO.	SECTION NO.	JOB NO.	HIGHWAY NO.	
Drawn:	KGM	14	WILLIAMSON	0337	01	029	SH 29	
Checked:	JJR							

3 OF 8

...\wa3\WEST\Common\533Wpp03.100 9/22/2004 6:09:24 AM

POINT	℄ OR ℬ	STATION	OFFSET	DESC
A	SH 29	168+40.01	16.00' RT	PC
B	SH 29	169+33.45	8.03' RT	PT
C	SH 29	170+03.67	4.05' LT	PC
D	SH 29	170+50.01	8.00' LT	PT
E	SH 29	177+90.01	8.00' RT	PC
F	SH 29	178+36.35	4.05' RT	PT

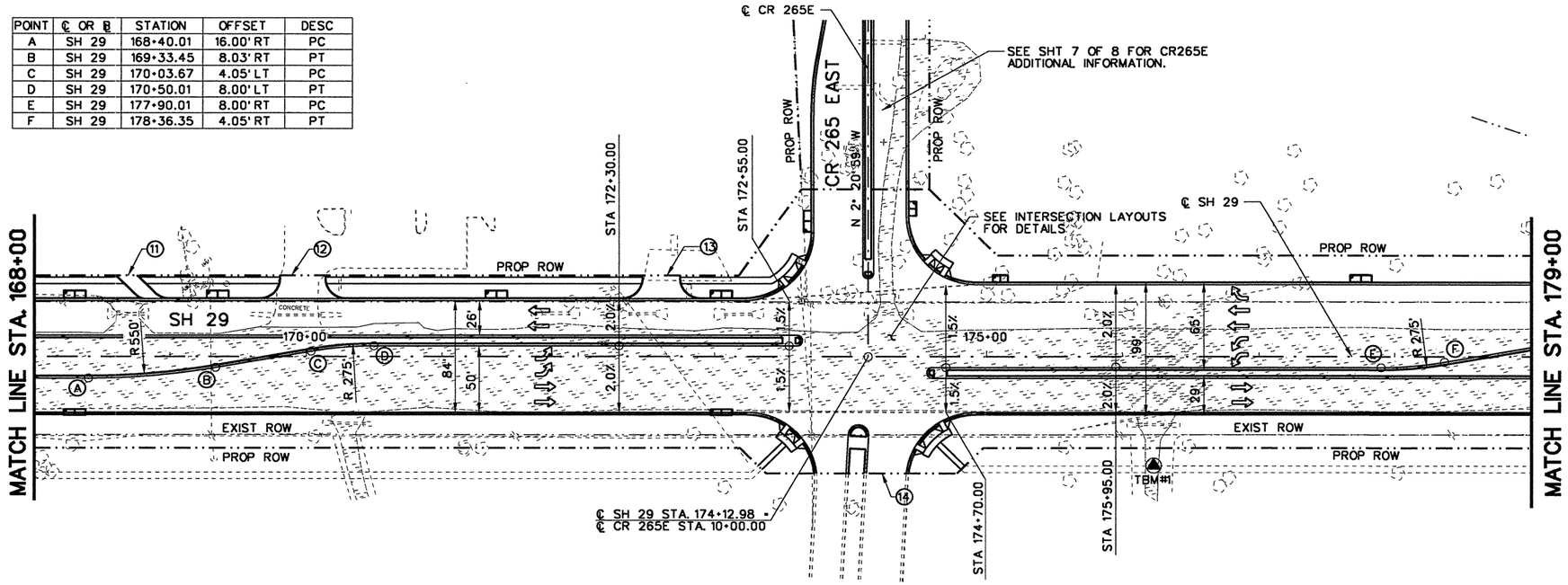

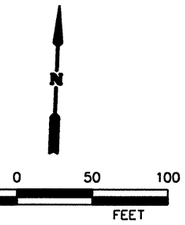

NOTES:

1. SEE SHEET 1 OF 8.

LEGEND:

(#) PROPOSED DRIVEWAY DESIGNATION

EXISTING PAVEMENT

VERTICAL CONTROL BENCHMARK

TBM #	ELEV.	STA.	OFFSET	DESCRIPTION
TBM#1	809.04	176+22.69	82.21 RT	COTTON GIN SPINDLE SET IN ASPHALT DRIVE (1015 HWY 29).

	216	249	297	361	380	345	354	369	401	410	387	391	403	411	413	408	395	372	357	340	318	295
	37	34	36	38	43	44	42	38	34	35	18	0	0	18	36	41	45	41	39	45	46	42

EST.	FINAL	UNIT	DESCRIPTION
7872		CY	EXCAVATION
752		CY	EMBANKMENT (TY B) (ORD COMP)

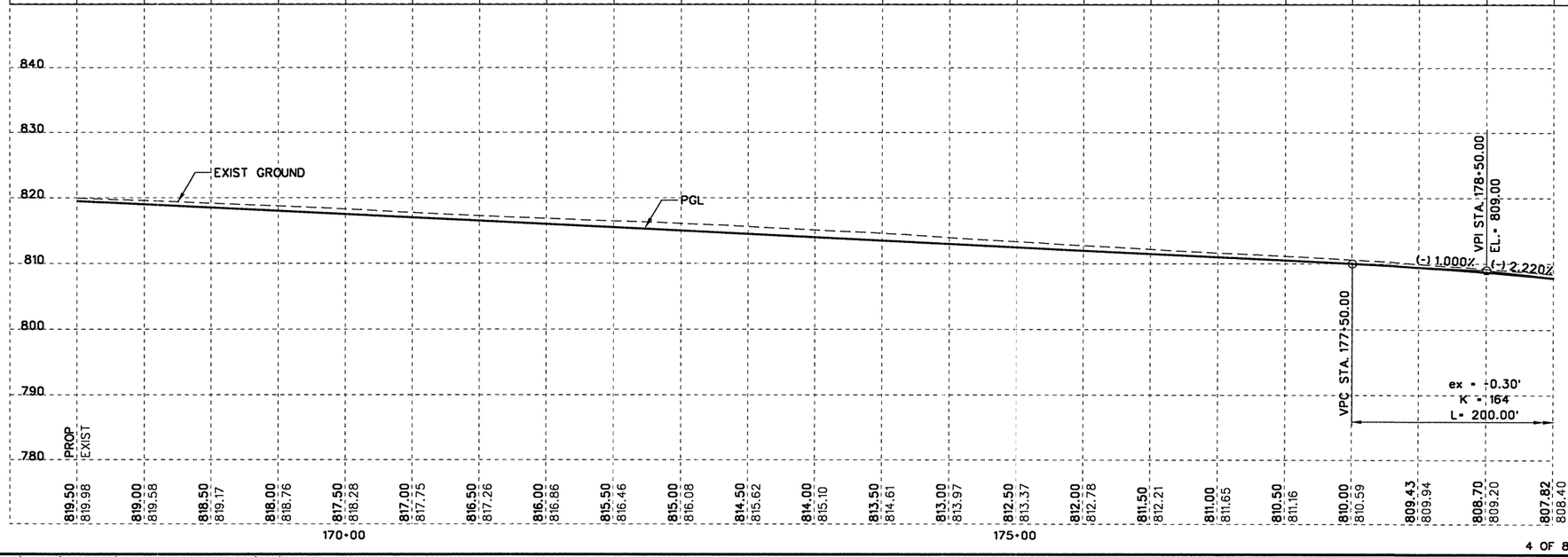

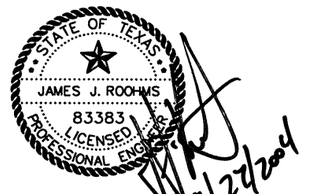

NO.	REVISION	BY	DATE

CP&Y Chiang, Patel & Yerby, Inc.

© 2004

Texas Department of Transportation

SH 29

ROADWAY PLAN & PROFILE
STA. 168+00 TO STA. 179+00

		FED. ROAD DIV. NO.	STATE	FEDERAL AID PROJECT NO.		SHEET NO.
Designed:	JWP	6	TEXAS	CC 337-1-29		72
Checked:	JJR	STATE DIST. NO.	COUNTY	CONTROL NO.	SECTION NO.	JOB NO.	HIGHWAY NO.
Drawn:	KGM	14	WILLIAMSON	0337	01	029	SH 29
Checked:	JJR						

POINT	℄ OR ℄	STATION	OFFSET	DESC
A	SH 29	180+95.00	54.00' LT	PC
B	SH 29	182+27.86	49.37' LT	PRC
C	SH 29	183+63.01	45.00' LT	PT
D	SH 29	180+67.59	42.00' RT	PC
E	SH 29	181+12.22	45.99' RT	PT
F	SH 29	181+46.40	51.97' RT	PC

POINT	℄ OR ℄	STATION	OFFSET	DESC
G	SH 29	181+69.58	53.40' RT	PT
H	SH 29	179+06.57	8.03' LT	PC
I	SH 29	180+00.01	16.00' LT	PT
J	SH 29	180+95.01	16.00' LT	PC
K	SH 29	182+26.34	11.41' LT	PRC
L	SH 29	183+63.01	7.00' LT	PT

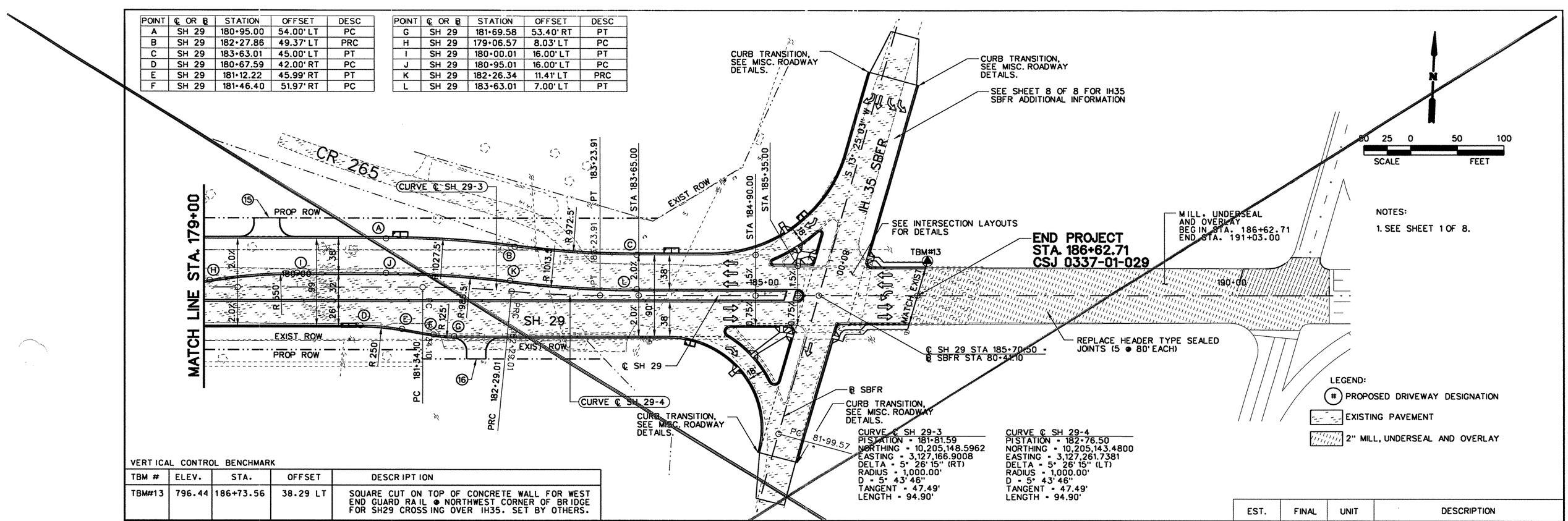

CURVE ℄ SH 29-3
PI STATION = 181+81.59
NORTHING = 10,205,148.5962
EASTING = 3,127,166.9008
DELTA = 5° 26' 15" (RT)
RADIUS = 1,000.00'
D = 5° 43' 46"
TANGENT = 47.49'
LENGTH = 94.90'

CURVE ℄ SH 29-4
PI STATION = 182+76.50
NORTHING = 10,205,143.4800
EASTING = 3,127,261.7381
DELTA = 5° 26' 15" (LT)
RADIUS = 1,000.00'
D = 5° 43' 46"
TANGENT = 47.49'
LENGTH = 94.90'

VERTICAL CONTROL BENCHMARK

TBM #	ELEV.	STA.	OFFSET	DESCRIPTION
TBM#13	796.44	186+73.56	38.29 LT	SQUARE CUT ON TOP OF CONCRETE WALL FOR WEST END GUARD RAIL @ NORTHWEST CORNER OF BRIDGE FOR SH29 CROSSING OVER IH35. SET BY OTHERS.

																						EST.	FINAL	UNIT	DESCRIPTION
	286	311	344	363	380	376	363	371	344	266	200	157	270	153	189	49						4422		CY	EXCAVATION
	37	29	23	23	19	9	20	23	29	37	19	13	8	1	2	0						292		CY	EMBANKMENT (TY B) (ORD COMP)

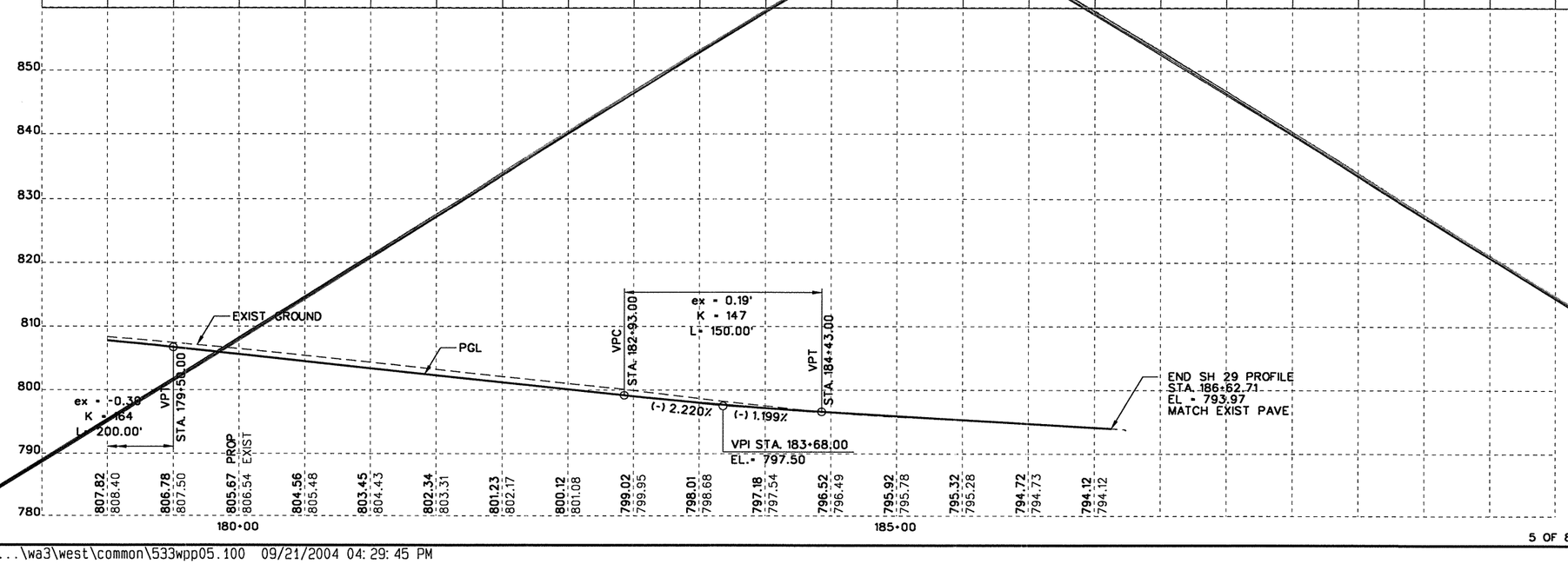

STATE OF TEXAS
JAMES J. ROOHMS
83383
LICENSED PROFESSIONAL ENGINEER
4/22/2004

NO.	REVISION	BY	DATE

CP&Y Chiang, Patel & Yerby, Inc.

© 2004

Texas Department of Transportation

SH 29

ROADWAY PLAN & PROFILE
STA. 179+00 TO END PROJECT

		FED. ROAD DIV. NO.	STATE	FEDERAL AID PROJECT NO.				SHEET NO.
Designed:	JWP	6	TEXAS	CC 337-1-29				7H
Checked:	JJR	STATE DIST. NO.	COUNTY	CONTROL NO.	SECTION NO.	JOB NO.	HIGHWAY NO.	
Drawn:	KGM	14	WILLIAMSON	0337	01	929	SH 29	
Checked:	JJR							

5 OF 8

...\wa3\west\common\533wpp05.100 09/21/2004 04:29:45 PM

POINT	℄ OR ℬ	STATION	OFFSET	DESC
A	SH 29	180+95.00	54.00' LT	PC
B	SH 29	182+27.86	49.37' LT	PRC
C	SH 29	183+63.01	45.00' LT	PT
D	SH 29	180+67.59	42.00' RT	PC
E	SH 29	181+12.22	45.99' RT	PT
F	SH 29	181+46.40	51.97' RT	PC

POINT	℄ OR ℬ	STATION	OFFSET	DESC
G	SH 29	181+69.58	53.40' RT	PT
H	SH 29	179+06.57	8.03' LT	PC
I	SH 29	180+00.01	16.00' LT	PT
J	SH 29	180+95.01	16.00' LT	PC
K	SH 29	182+26.34	11.41' LT	PRC
L	SH 29	183+63.01	7.00' LT	PT

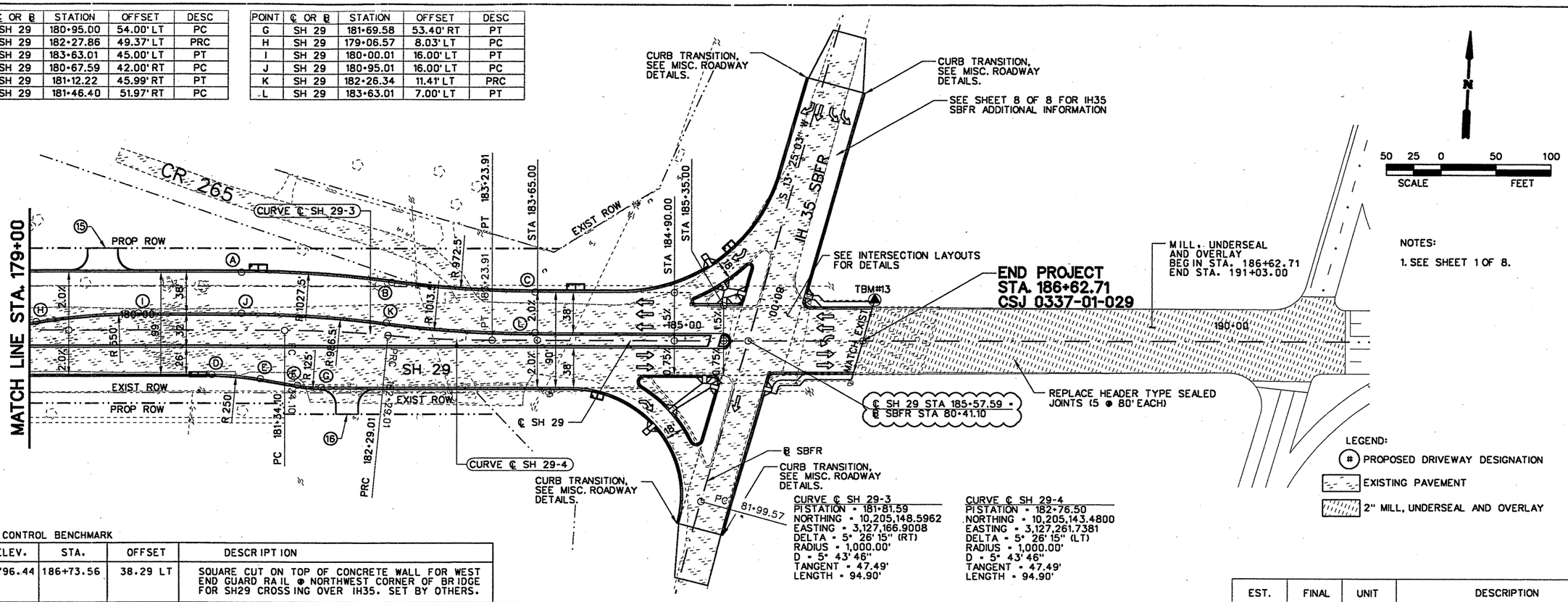

NOTES:

1. SEE SHEET 1 OF 8.

LEGEND:

(#) PROPOSED DRIVEWAY DESIGNATION

EXISTING PAVEMENT

2" MILL, UNDERSEAL AND OVERLAY

CURVE ℄ SH 29-3
PISTATION = 181+81.59
NORTHING = 10,205,148.5962
EASTING = 3,127,166.9008
DELTA = 5° 26' 15" (RT)
RADIUS = 1,000.00'
D = 5° 43' 46"
TANGENT = 47.49'
LENGTH = 94.90'

CURVE ℄ SH 29-4
PISTATION = 182+76.50
NORTHING = 10,205,143.4800
EASTING = 3,127,261.7381
DELTA = 5° 26' 15" (LT)
RADIUS = 1,000.00'
D = 5° 43' 46"
TANGENT = 47.49'
LENGTH = 94.90'

VERTICAL CONTROL BENCHMARK

TBM #	ELEV.	STA.	OFFSET	DESCRIPTION
TBM#13	796.44	186+73.56	38.29 LT	SQUARE CUT ON TOP OF CONCRETE WALL FOR WEST END GUARD RAIL @ NORTHWEST CORNER OF BRIDGE FOR SH29 CROSSING OVER IH35. SET BY OTHERS.

	286	311	344	363	380	376	363	371	344	266	200	157	270	153	189	49							EST.	FINAL	UNIT	DESCRIPTION
	37	29	23	23	19	9	20	23	29	37	19	13	8	1	2	0							4422		CY	EXCAVATION
																							292		CY	EMBANKMENT (TY B) (ORD COMP)

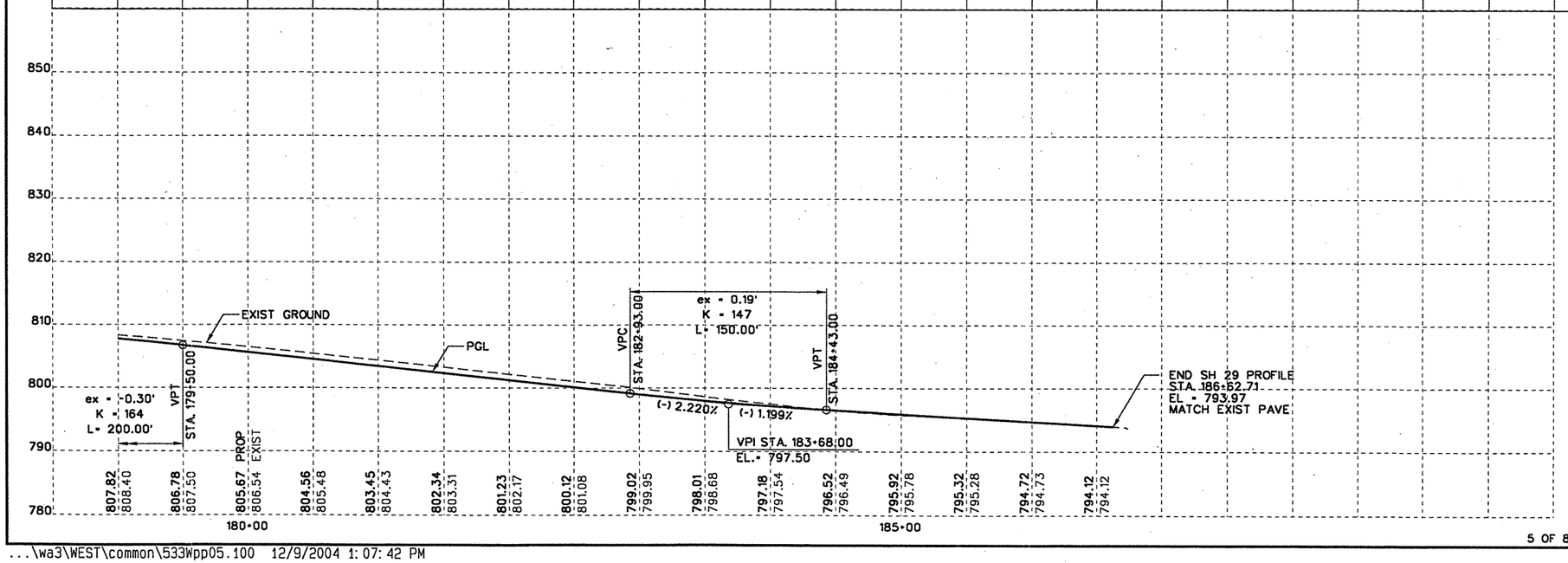

STATE OF TEXAS
JAMES J. ROOHMS
83383
LICENSED
PROFESSIONAL ENGINEER
12/10/04

NO.	REVISION	BY	DATE
CO 1	UPDATED SBFR	AJW	12/08/04

CP&Y Chiang, Patel & Yerby, Inc.

© 2004

Texas Department of Transportation

SH 29

ROADWAY PLAN & PROFILE
STA. 179+00 TO END PROJECT

Designed:	JWP	FED. ROAD DIV. NO.	STATE	FEDERAL AID PROJECT NO.				SHEET NO.
Checked:	JJR	6	TEXAS	CC 337-1-29				74
Drawn:	KGM	STATE DIST. NO.	COUNTY	CONTROL NO.	SECTION NO.	JOB NO.	HIGHWAY NO.	
Checked:	JJR	14	WILLIAMSON	0337	01	029	SH 29	

...\wa3\WEST\common\533Wpp05.100 12/9/2004 1:07:42 PM

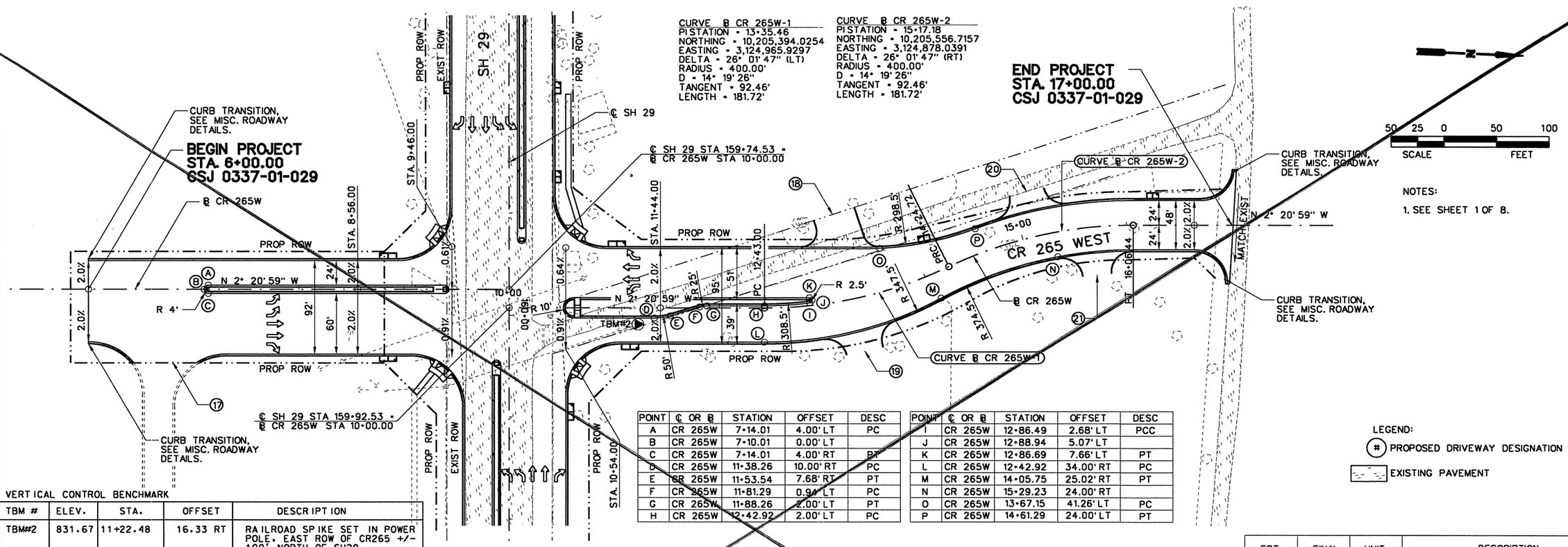

NOTES:

1. SEE SHEET 1 OF 8.

LEGEND:

(#) PROPOSED DRIVEWAY DESIGNATION

EXISTING PAVEMENT

POINT	℄ OR ℄	STATION	OFFSET	DESC
A	CR 265W	7+14.01	4.00' LT	PC
B	CR 265W	7+10.01	0.00' LT	
C	CR 265W	7+14.01	4.00' RT	PT
D	CR 265W	11+38.26	10.00' RT	PC
E	CR 265W	11+53.54	7.68' RT	PT
F	CR 265W	11+81.29	0.94' LT	PC
G	CR 265W	11+88.26	2.00' LT	PT
H	CR 265W	12+42.92	2.00' LT	PC

POINT	℄ OR ℄	STATION	OFFSET	DESC
I	CR 265W	12+86.49	2.68' LT	PCC
J	CR 265W	12+88.94	5.07' LT	
K	CR 265W	12+86.69	7.66' LT	PT
L	CR 265W	12+42.92	34.00' RT	PC
M	CR 265W	14+05.75	25.02' RT	PT
N	CR 265W	15+29.23	24.00' RT	
O	CR 265W	13+67.15	41.26' LT	PC
P	CR 265W	14+61.29	24.00' LT	PT

VERTICAL CONTROL BENCHMARK

TBM #	ELEV.	STA.	OFFSET	DESCRIPTION
TBM#2	831.67	11+22.48	16.33 RT	RAILROAD SPIKE SET IN POWER POLE. EAST ROW OF CR265 +/- 100' NORTH OF SH29

	319	334	298	297	333	277	174	0	0	0	332	315	297	285	275	250	211	201	222	241	252	208	EST.	FINAL	UNIT	DESCRIPTION
	3	0	6	8	4	16	15	0	0	0	16	20	14	7	0	2	3	1	0	0	0	0	5121		CY	EXCAVATION
																							115		CY	EMBANKMENT (TY B) (ORD COMP)

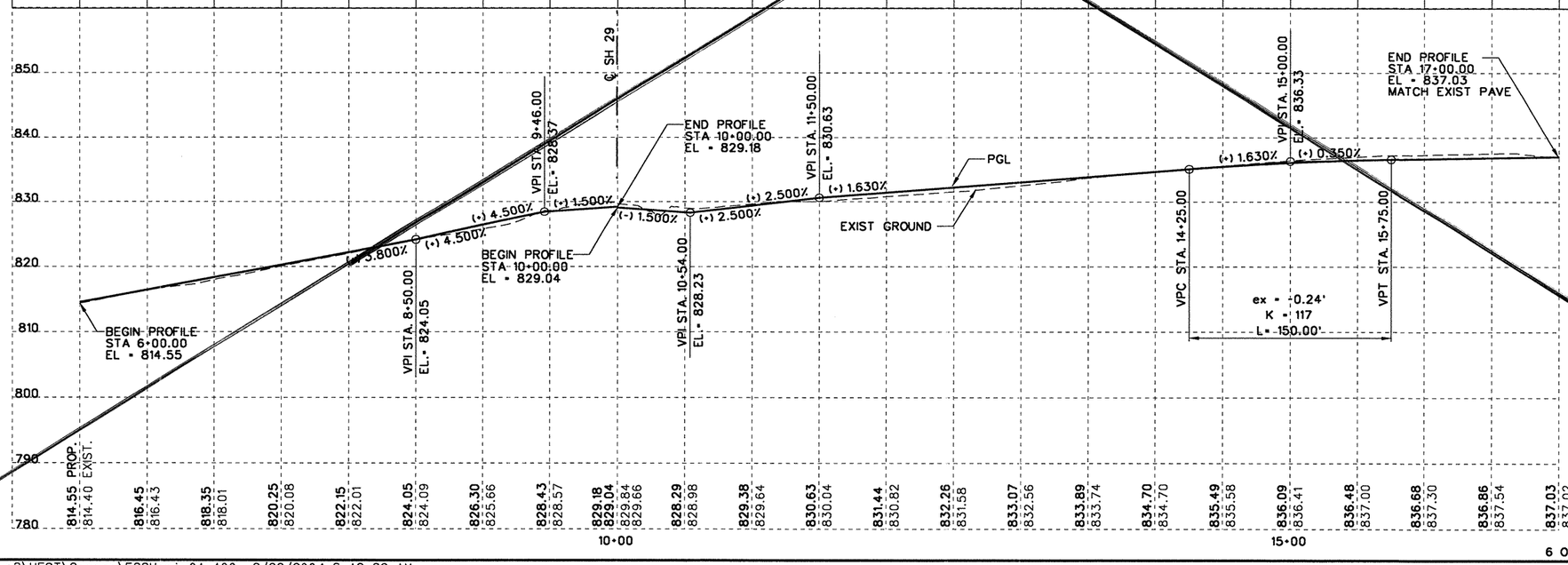

STATE OF TEXAS
JAMES J. ROOHMS
83383
LICENSED PROFESSIONAL ENGINEER
9/22/2004

NO.	REVISION	BY	DATE

CP&Y Chiang, Patel & Yerby, Inc.

© 2004

Texas Department of Transportation

SH 29

ROADWAY PLAN & PROFILE

CR 265 WEST

Designed:	JWP	FED. ROAD DIV. NO.	STATE	FEDERAL AID PROJECT NO.			SHEET NO.
Checked:	JJR	6	TEXAS	CC 337-1-29			7S
Drawn:	DHS	STATE DIST. NO.	COUNTY	CONTROL NO.	SECTION NO.	JOB NO.	HIGHWAY NO.
Checked:	JJR	14	WILLIAMSON	0337	01	039	SH 29

6 OF 8

...\wa3\WEST\Common\533Wppiw01.100 9/22/2004 6:13:32 AM

CONSTRUCT CONCRETE DRIVEWAY APPROACH SEE SHEET 10 FOR DETAILS EXTEND TO R.O.W.

REMOVE AND DISPOSE OF EXISTING FIRE HYDRANT AND RELOCATE SEE SHEET 10 FOR DETAILS

CONSTRUCT CONCRETE DRIVEWAY APPROACH SEE SHEET 10 FOR DETAILS EXTEND TO R.O.W.

CR 265W

SITE BENCHMARK
Northing : 10288374.00'
Easting : 3124392.41'
Elevation : 839.63'

PROPOSED ROADWAY

MATCH TO PROPOSED SH 29 ROADWAY PLANS (CR265 WEST) BY OTHERS STA. 12+44.10± OFFSET 11.91'±

CONSTRUCT CONCRETE DRIVEWAY APPROACH SEE SHEET 10 FOR DETAILS

CONSTRUCT CONCRETE DRIVEWAY APPROACH SEE SHEET 10 FOR DETAILS

CR 265

HORIZONTAL GRAPHIC SCALE IN FEET

VERTICAL GRAPHIC SCALE IN FEET

SHEET 5 OF 11

NOTE: SEE SHEET NO. 7 FOR CURVE DATA.

STATE OF TEXAS
R. DAVID PATRICK
82738
REGISTERED PROFESSIONAL ENGINEER

Texas Department of Transportation
Traffic Operations Division

KASSING, PATRICK & ASSOCIATES, L.L.P.
CONSULTING ENGINEERS
TEMPLE, TEXAS 76501

FED.RD. DIV.NO.	AID PROJECT NO.	SHEET
6	CC-337-1-29	75A

STATE	DIST.	COUNTY
TEXAS	14	WILLIAMSON

CONT.	SECT	JOB	HIGHWAY NO.
337	1	29	CR265 - SH29

C.O.#6

P:\Georgetown\2004\2004-120-22\cad\WORKING\PLANS\PP-06.dwg

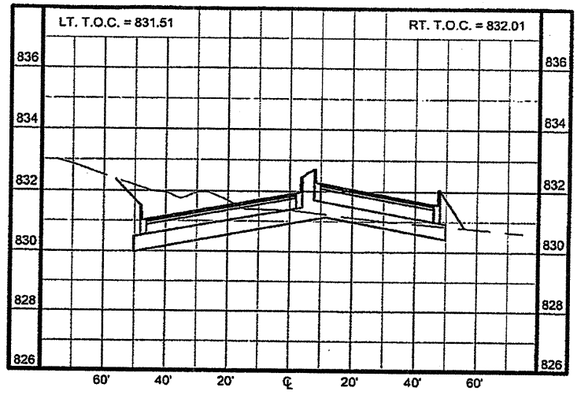

STATION 5+69.77

CUT = 77.0 sq.ft.
SELECT FILL = 0 sq.ft.
FILL = 20.6 sq.ft.

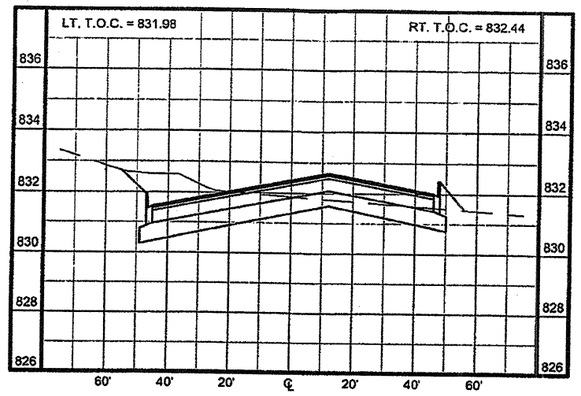

STATION 6+00

CUT = 93.3 sq.ft.
SELECT FILL = 0 sq.ft.
FILL = 9.5 sq.ft.

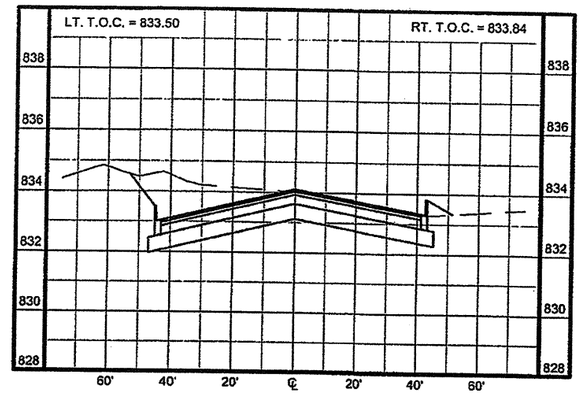

STATION 7+00

CUT = 125.7 sq.ft.
SELECT FILL = 0 sq.ft.
FILL = 2.2 sq.ft.

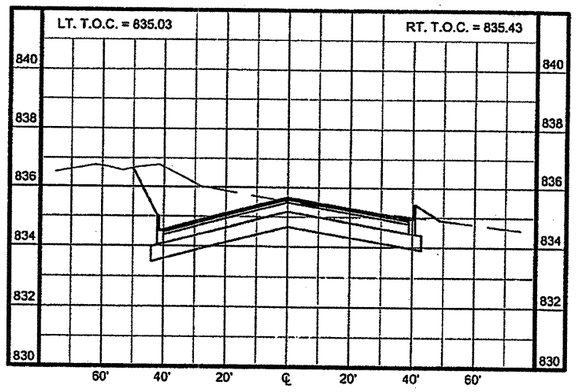

STATION 8+00

CUT = 132.3 sq.ft.
SELECT FILL = 0 sq.ft.
FILL = 1.7 sq.ft.

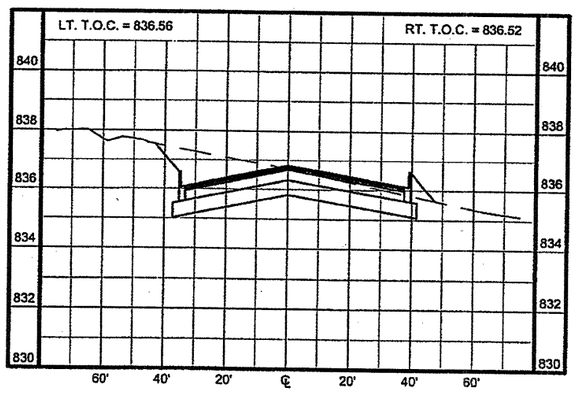

STATION 9+00

CUT = 98.6 sq.ft.
SELECT FILL = 0 sq.ft.
FILL = 3.3 sq.ft.

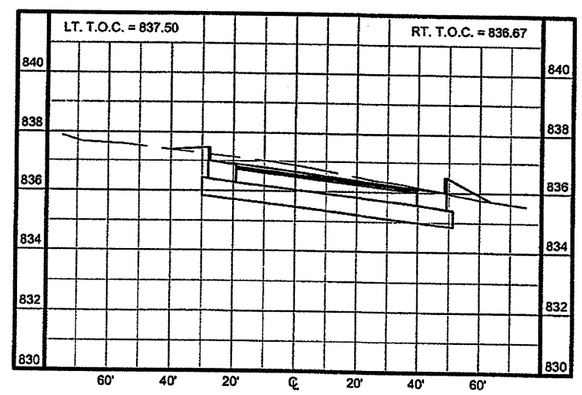

STATION 10+00

CUT = 106.7 sq.ft.
SELECT FILL = 0 sq.ft.
FILL = 5.5 sq.ft.

STATE OF TEXAS
R. DAVID PATRICK
82738
REGISTERED PROFESSIONAL ENGINEER

0 20 40
HORIZONTAL SCALE IN FEET

0 2 4
VERTICAL SCALE IN FEET

Texas Department of Transportation
Traffic Operations Division

KASBERG, PATRICK & ASSOCIATES, L.L.P.
CONSULTING ENGINEERS
TEMPLE, TEXAS 76501

FED.RD. DIV.NO.	AID PROJECT NO.		SHEET
6	CC-337-1-29		75B
STATE	DIST.	COUNTY	
TEXAS	14	WILLIAMSON	
CONT.	SECT.	JOB	HIGHWAY NO.
337	1	29	CR265 - SH29

C.O. #6

P:\Georgetown\2004\2004-120-22\cad\WORKINGPLANS\PP-06.dwg

CURVE DATA

Curve No.	Radius	Delta Angle	Tangent	Length	Chord
CL-01	413.51'	26°47'05"	98.45'	193.30'	191.55'
CL-02	320.00'	24°55'26"	70.72'	139.20'	138.11'
C-01	30.00'	93°10'06"	31.71'	48.78'	43.58'
C-02	30.00'	86°41'03"	28.41'	45.54'	41.32'
C-03	288.00'	7°37'43"	19.20'	38.35'	38.32'
C-04	426.00'	34°11'57"	131.05'	254.27'	250.52'
C-05	20.00'	87°16'35"	19.07'	30.47'	27.60'
C-06	5.64'	180°00'00"	-	17.71'	11.27'
C-07	10.00'	186°26'10"	-	32.54'	10.97'
C-09	314.00'	8°07'08"	22.28'	44.49'	44.30'
C-14	400.00'	27°09'30"	96.62'	189.60'	187.83
C-15	20.00'	95°08'00"	21.88'	33.21'	29.52
C-16	20.00'	96°40'48"	22.48'	33.75'	29.88
C-17	0.66'	172°25'41"	9.97'	1.99'	1.32
C-18	20.00'	92°08'18"	20.76'	32.16'	28.81
C-19	278.24'	26°26'45"	65.38'	128.43'	127.29
C-20	20.00'	92°08'24"	20.76'	32.16'	28.81
C-21	308.00'	7°14'21"	19.48'	38.91'	38.89
C-22	313.00'	26°56'24"	74.97'	147.17'	145.82
C-23	25.00'	73°30'15"	18.61'	31.97'	29.82
C-24	20.00'	84°58'22"	18.32'	29.66'	27.02
C-25	20.00'	85°21'35"	18.44'	29.80'	27.12

STATE OF TEXAS
R. DAVID PATRICK
82738
REGISTERED
PROFESSIONAL ENGINEER
7/5/05

Texas Department of Transportation
Waco Overview Division

KASBERG, PATRICK & ASSOCIATES, L.L.P.
CONSULTING ENGINEERS
TEMPLE, TEXAS 76501

FED.RD. DIV.NO.	AID PROJECT NO.	SHEET
6	CC-337-1-29	75C

STATE	DIST.	COUNTY
TEXAS	14	WILLIAMSON

CONT.	SECT.	JOB	HIGHWAY NO.
337	1	29	CR265 - SH29

C.O.#6

P:\Georgetown\2004\2004-120-22\cad\revisions7-11\PP-03.dwg

NOTES

1. SEE DETAIL THIS SHEET FOR RIVERY TO STATE HIGHWAY 29 CONNECTOR.
2. CONSTRUCTION AREAS SHOULD BE STRIPPED OF ALL VEGETATION, LOOSE TOPSOIL, ORGANICS, ETC. ROOTS OF TREES TO BE REMOVED WITHIN CONSTRUCTION AREAS SHOULD BE GRUBBED TO FULL DEPTHS. SITE STRIPPING COULD FREQUENTLY LOOSEN LIMESTONE ROCKS AND BOULDERS, WHICH SHOULD BE EXCAVATED AND REMOVED FROM THE CONSTRUCTION AREAS. THE EXPOSED SOIL SUBGRADE AREAS SHOULD BE CAREFULLY PROOFROLLED WITH A 20-TON PNEUMATIC ROLLER OR EQUIVALENT EQUIPMENT TO DETECT WEAK ZONES. WEAK AREAS DETECTED DURING PROOFROLLING, AS WELL AS ZONES CONTAINING DEBRIS OR ORGANICS AND VOIDS RESULTING FROM REMOVAL OF ROOTS, TREES, BOULDERS, ETC., SHOULD BE REMOVED AND REMPLACED WITH SOILS EXHIBITING SIMILAR CLASSIFICATION, MOISTURE CONTENT, AND DENSITY AS THE ADJACENT IN-SITU SOILS. EXPOSED LIMESTONE SUBGRADE SHOULD BE CLEANED SUFFICIENTLY AND ANY VOIDS FILLED WITH CRUSHED LIMESTONE BASE MATERIAL. PROPER SITE DRAINAGE SHOULD BE MAINTAINED DURING CONSTRUCTION SO THAT PONDING OF SURFACE RUNOFF DOES NOT OCCUR AND CAUSE CONSTRUCTION DELAYS AND/OR INHIBIT SITE ACCESS.
3. NATURAL SUBGRADE AND SUBGRADE FILL - THE NATURAL SUBGRADE THAT IS DISTURBED AND ANY SOILS PLACED AS FILL WITHIN THE ROADWAY ALIGNMENT SHOULD BE COMPACTED TO WITHIN A RANGE OF 95% TO 100% OF TEX-113-E MAXIMUM DRY DENSITY AT A MOISTURE CONTENT NOT LESS THAN OPTIMUM MOISTURE CONTENT.
4. COMPACTED FILL MATERIAL TO BE PLACED FOR THE ROADWAY SECTION OF RIVERY TO STATE HIGHWAY 29 CONNECTOR SHOULD HAVE A PLASTICITY INDEX (PI) OF NO GREATER THAN 20 BUT NO LESS THAN 7 (7>PI<20). ALSO, THE FILL MATERIAL SHOULD HAVE A LIQUID LIMIT (LL) LESS THAN 40 (LL<40). THE FILL MATERIAL SHOULD CONSIST OF SELECT, NON-EXPANSIVE MATERIAL WITH SUFFICIENT SOIL BINDER TO ASSIST IN PROPER COMPACTION. THE FILL MATERIAL MAY CONSIST OF CLAYEY SAND, OR CLAYEY GRAVEL (SC OR GC). SILTY SAND OR CLEAN SAND IS NOT RECOMMENDED. ALL PROPOSED FILL MATERIAL SHALL BE SUBMITTED FOR EVALUATION AS TO SUITABILITY. THE COMPACTIVE EFFORT AND SPECIFIC REQUIREMENTS OF THE FINISHED PRODUCT ARE AS STATED IN ITEM 6 ABOVE.

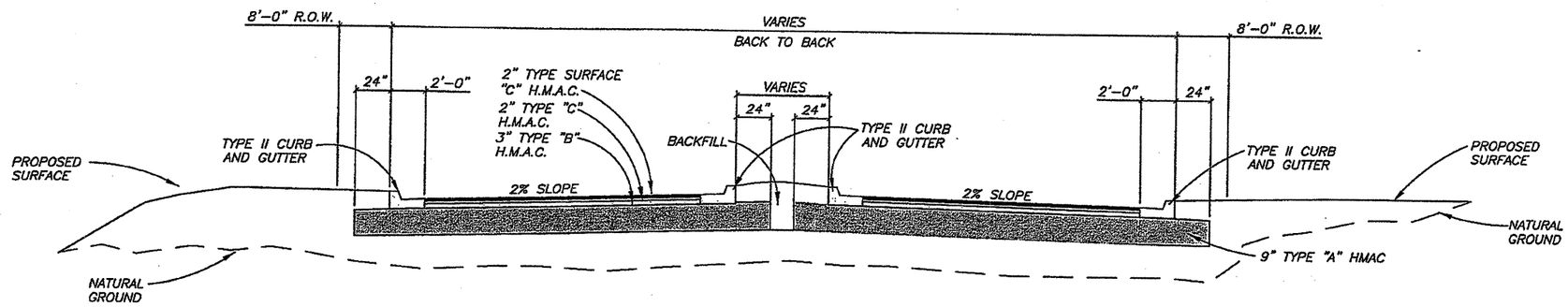

PAVEMENT STRUCTURE - COUNTY ROAD 265 TO STATE HIGHWAY 29
9" TYPE "A" HMAC WITH SOIL SUBGRADE
NOT TO SCALE

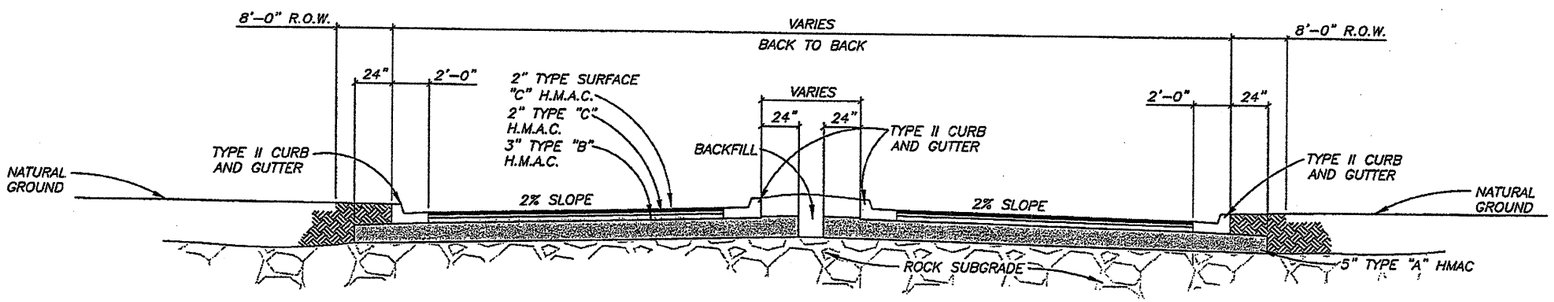

PAVEMENT STRUCTURE -COUNTY ROAD 265 TO STATE HIGHWAY 29
5" HMAC MATERIAL WITH ROCK SUBGRADE
NOT TO SCALE

STATE OF TEXAS
R. DAVID PATRICK
82738
REGISTERED PROFESSIONAL ENGINEER

Texas Department of Transportation
Traffic Operations Division

KASSENG, PATRICK & ASSOCIATES, L.L.P.
CONSULTING ENGINEERS
TEMPLE, TEXAS 76501

FED.RD. DIV.NO.	AID PROJECT NO.		SHEET NO.
6	CC-337-1-29		75d
STATE	DIST.	COUNTY	
TEXAS	14	WILLIAMSON	
CONT.	SECT.	JOB	HIGHWAY NO.
337	1	29	CR265 - SH29

P:\Georgetown\2020\42004-120-22\cad\revisions7-11\PP-07.dwg

C.O.#6

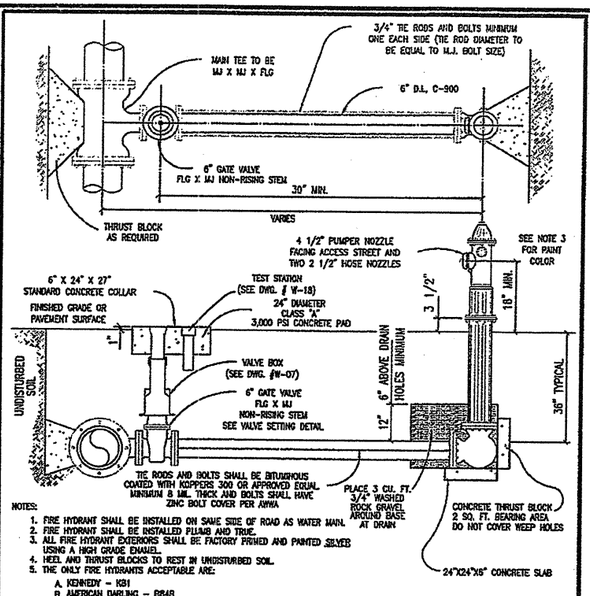

NOTES:

1. FIRE HYDRANT SHALL BE INSTALLED ON SAME SIDE OF ROAD AS WATER MAIN.
2. FIRE HYDRANT SHALL BE INSTALLED PLUMB AND TRUE.
3. ALL FIRE HYDRANT EXTERIORS SHALL BE FACTORY PRIMED AND PAINTED SILVER USING A HIGH GRADE ENAMEL.
4. HEEL AND THRUST BLOCKS TO REST IN UNDISTURBED SOIL.
5. THE ONLY FIRE HYDRANTS ACCEPTABLE ARE:
   A. KENNEDY - K81
   B. AMERICAN DARLING - B84B
   C. CLOW MEDALLION
6. DOUBLE BLUE REFLECTOR "HYC-LITES" BRAND, MANUFACTURED BY PAVEMENT MARKERS INC. TO BE INSTALLED AT CENTERLINE OF STREET PERPENDICULAR TO HYDRANT.
7. ALL METALLIC PIPES AND FITTINGS SHALL BE WRAPPED WITH 8 MILL. POLYETHELENE FILM.

ISSUE DATE: JANUARY 2003	CITY OF GEORGETOWN	DWG. # W-10
REVISIONS	TYP. FIRE HYDRANT INSTALLATION	W10.DWG
DATE / APPROVED / DRAWN	GEORGETOWN UTILITY SYSTEMS	
SCALE: N.T.S.	CONSTRUCTION STANDARDS AND DETAILS	

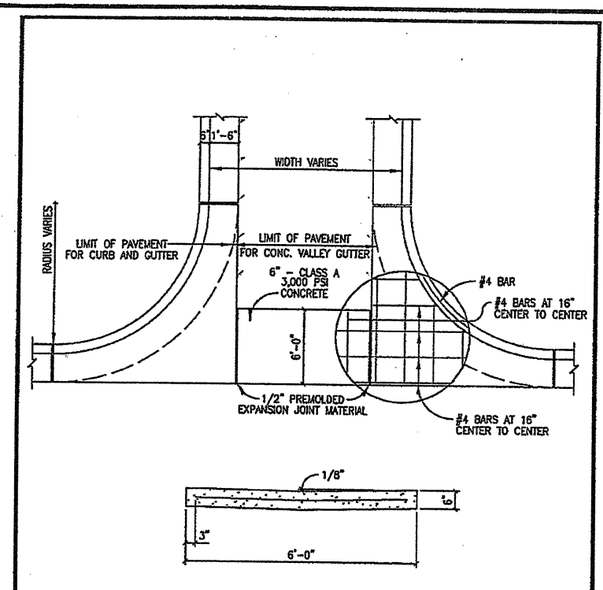

ISSUE DATE: JANUARY 2003	CITY OF GEORGETOWN	DWG. #SD-03
REVISIONS	CONCRETE VALLEY GUTTER DETAIL	SD03.DWG
DATE / APPROVED / DRAWN	GEORGETOWN UTILITY SYSTEMS	
SCALE: N.T.S.	CONSTRUCTION STANDARDS AND DETAILS	

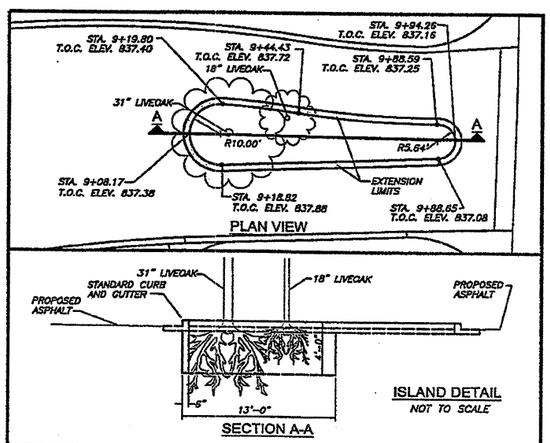

ISLAND DETAIL
NOT TO SCALE

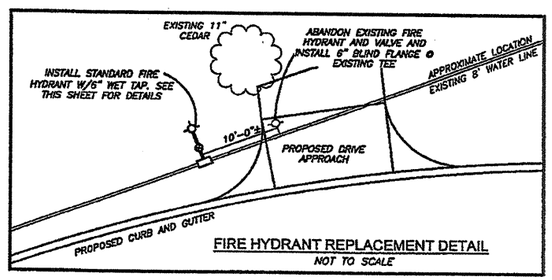

FIRE HYDRANT REPLACEMENT DETAIL
NOT TO SCALE

MISC. DETAILS
NOT TO SCALE

P:\Georgetown\2004\2004-120-22\civil\revisions7-11\PP-10.dwg

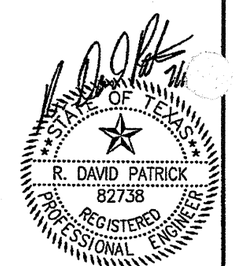

Texas Department of Transportation
Traffic Operations Division

KASBEKAR, PATRICK & ASSOCIATES, L.L.P.
CONSULTING ENGINEERS
TEMPLE, TEXAS 76501

FED.RD. DIV.NO.		AID PROJECT NO.		SHEET NO.
6		CC-337-1-29		75E
STATE	DIST.	COUNTY		
TEXAS	14	WILLIAMSON		
CONT.	SECT.	JOB	HIGHWAY NO.	
337	1	29	CR265 - SH29	

C.O.#6

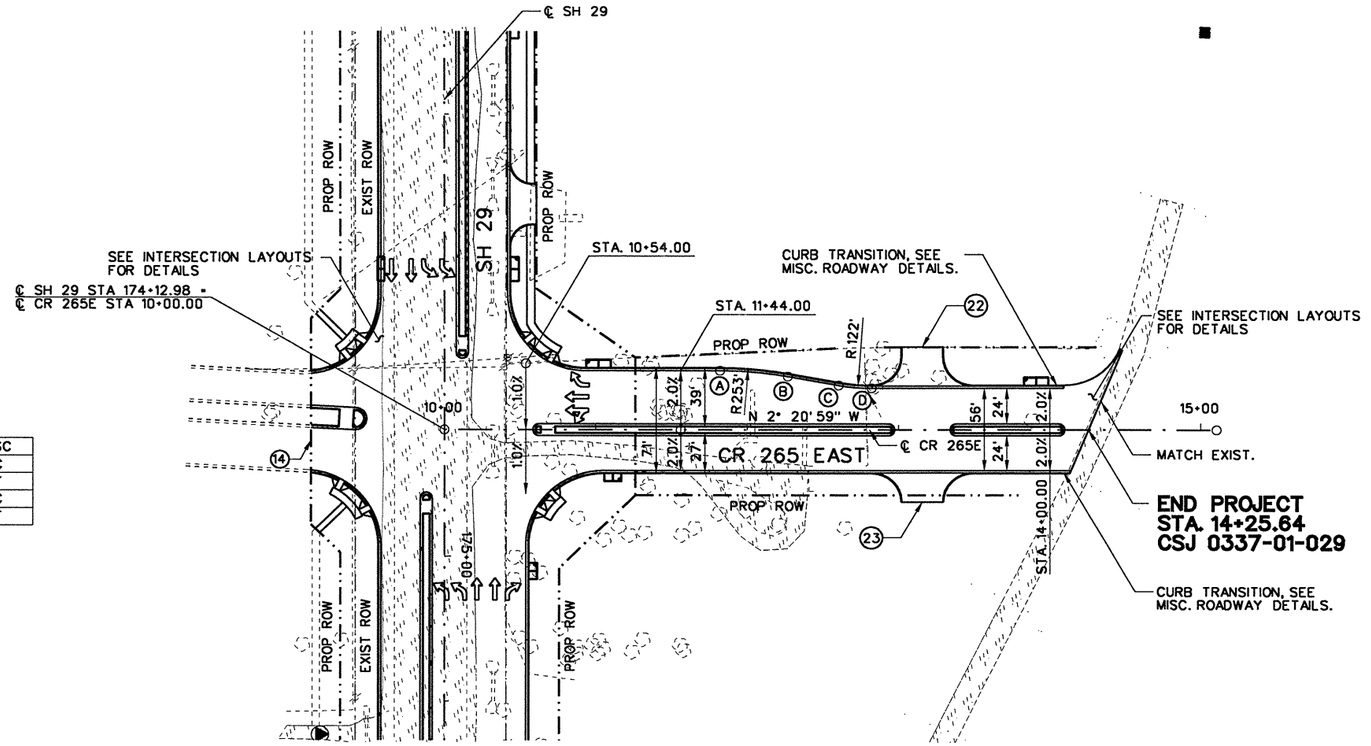

POINT	℄ OR ⅊	STATION	OFFSET	DESC
A	CR 265E	11+82.00	40.00' LT	PC
B	CR 265E	12+26.63	36.01' LT	PT
C	CR 265E	12+60.17	29.96' LT	PC
D	CR 265E	12+82.09	28.00' LT	PT

50 25 0 50 100
SCALE FEET

NOTES:

1. SEE SHEET 1 OF 8.

LEGEND:

(#) PROPOSED DRIVEWAY DESIGNATION

EXISTING PAVEMENT

												EST.	FINAL	UNIT	DESCRIPTION
									0	0	412	425	394	320	284	266	110				2211		CY	EXCAVATION
									0	0	0	0	0	0	0	0	0				0		CY	EMBANKMENT (TY B) (ORD COMP)

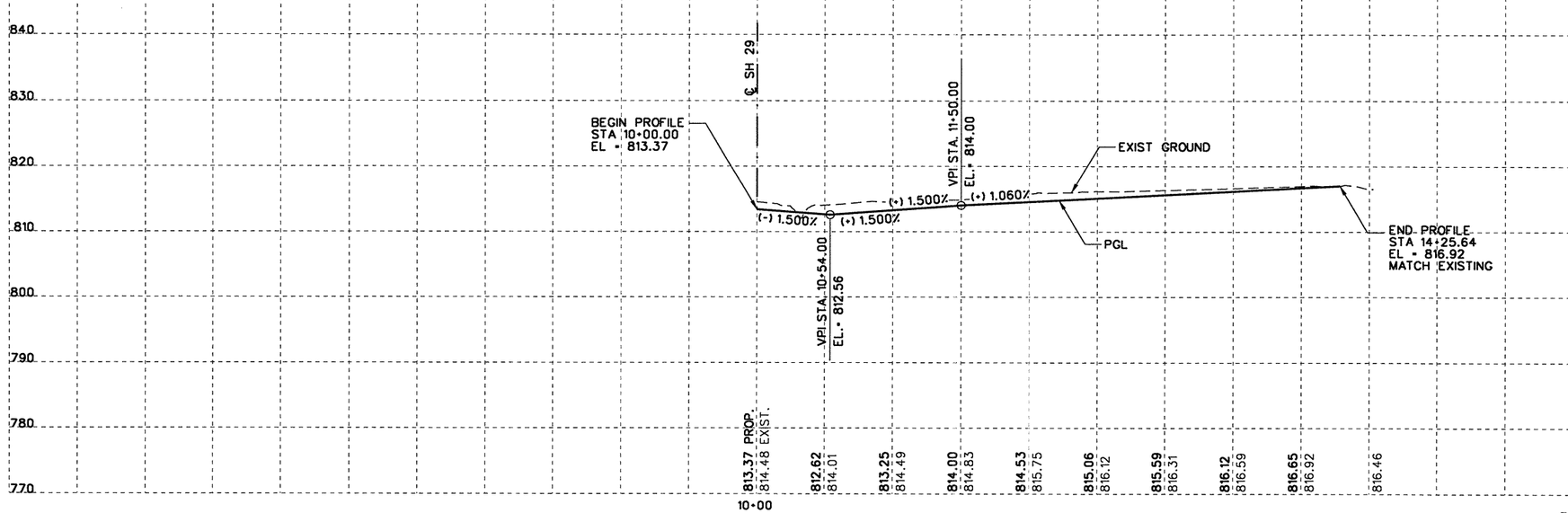

STATE OF TEXAS
JAMES J. ROOHMS
83383
LICENSED
PROFESSIONAL ENGINEER
9/22/2004

NO.	REVISION	BY	DATE

CP&Y Chiang, Patel & Yerby, Inc.

© 2004

Texas Department of Transportation

SH 29

ROADWAY PLAN & PROFILE

CR 265 EAST

		FED. ROAD DIV. NO.	STATE	FEDERAL AID PROJECT NO.				SHEET NO.
Designed:	JWP	6	TEXAS	CC 337-1-29				76
Checked:	JJR	STATE DIST. NO.	COUNTY	CONTROL NO.	SECTION NO.	JOB NO.	HIGHWAY NO.	
Drawn:	DHS	14	WILLIAMSON	0337	01	029	SH 29	
Checked:	JJR							

...\wa3\west\common\533wppie01.100 09/21/2004 04:29:52 PM

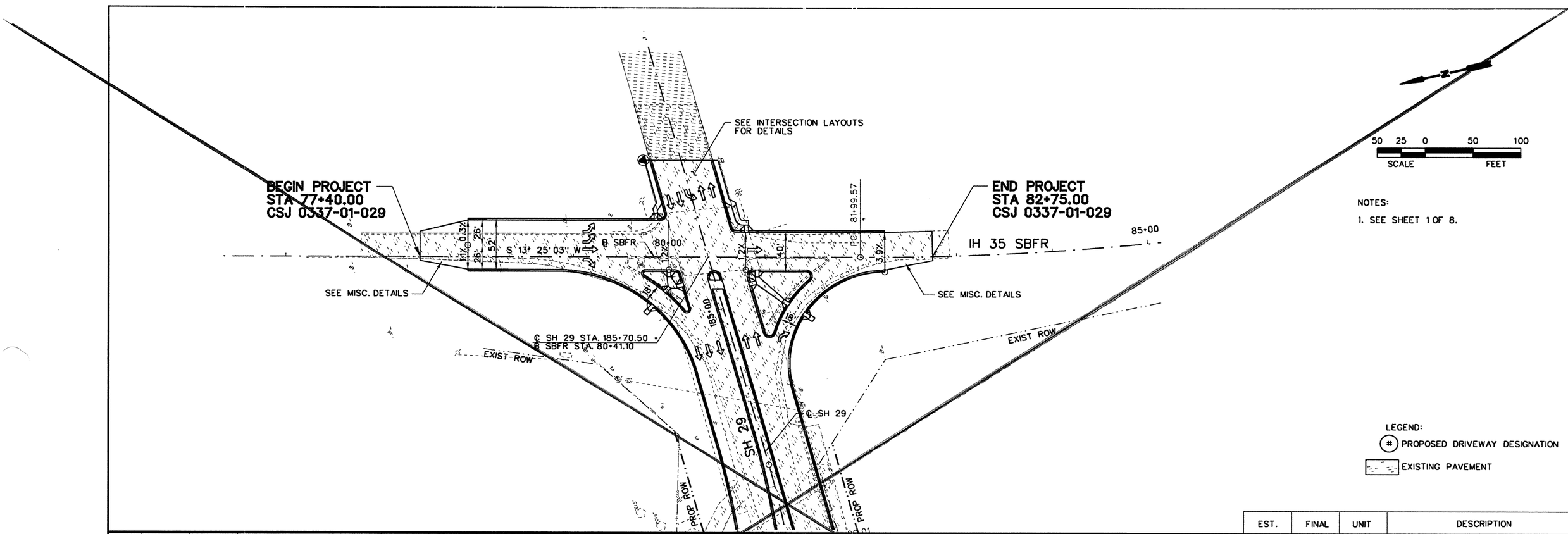

					55	24	151	209	212	148	113	120	122	124	67	69						
					56	22	105	94	111	72	4	10	20	10	0	0						

EST.	FINAL	UNIT	DESCRIPTION
1414		CY	EXCAVATION
504		CY	EMBANKMENT (TY B) (ORD COMP)

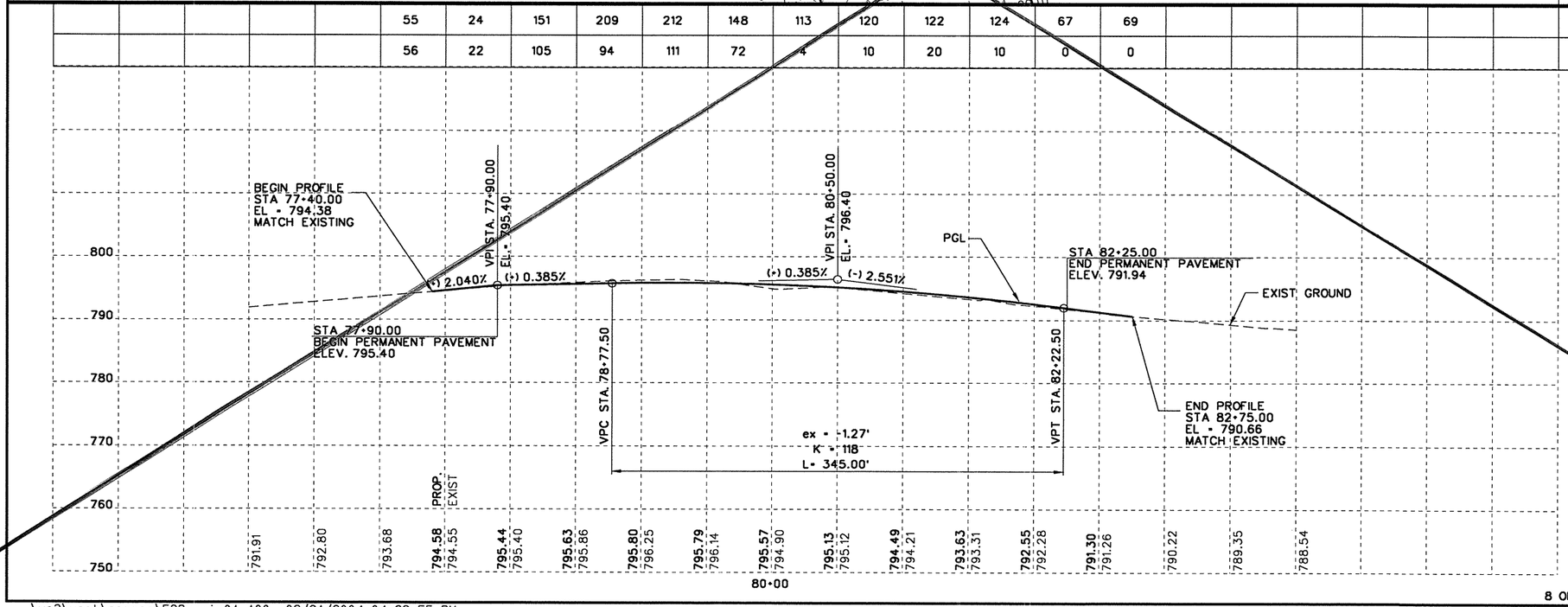

STATE OF TEXAS
JAMES J. ROOHMS
83383
LICENSED
PROFESSIONAL ENGINEER
9/22/2004

NO.	REVISION	BY	DATE

CP&Y Chiang, Patel & Yerby, Inc.

© 2004

Texas Department of Transportation

SH 29

ROADWAY PLAN & PROFILE

IH 35 SBFR

		FED. ROAD DIV. NO.	STATE	FEDERAL AID PROJECT NO.	SHEET NO.
Designed:	AJW	6	TEXAS	CC 337-1-29	7
Checked:	JJR	STATE DIST. NO.	COUNTY	CONTROL NO. / SECTION NO. / JOB NO.	HIGHWAY NO.
Drawn:	AJW	14	WILLIAMSON	0337 / 01 / 029	SH 29
Checked:	JJR				

...\wa3\west\common\533wppis01.100 09/21/2004 04:29:55 PM

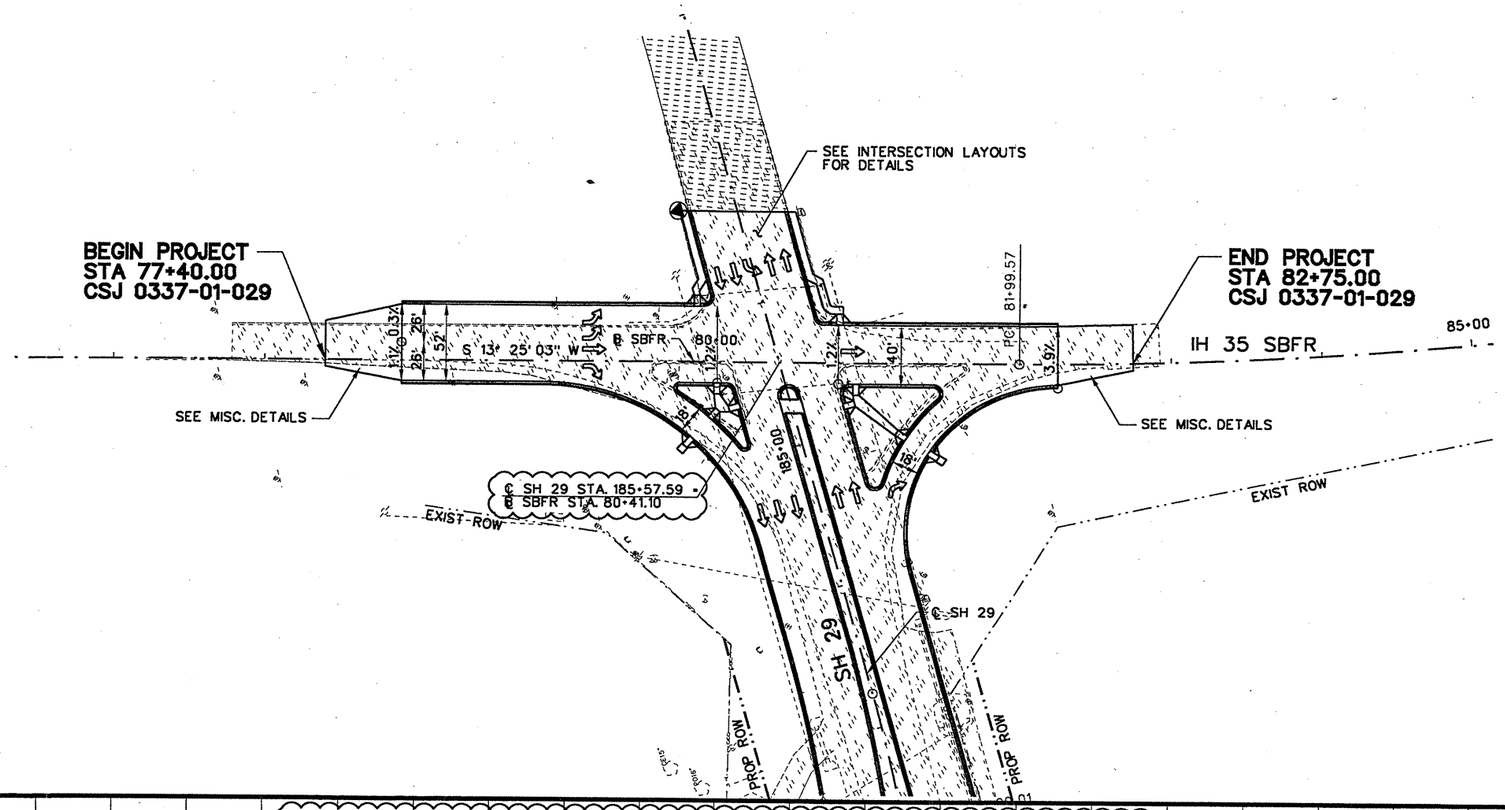

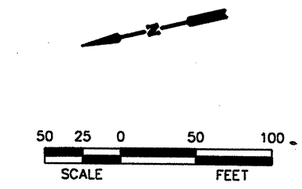

NOTES:

1. SEE SHEET 1 OF 8.

LEGEND:

(#) PROPOSED DRIVEWAY DESIGNATION

EXISTING PAVEMENT

EST.	FINAL	UNIT	DESCRIPTION
1240		CY	EXCAVATION
487		CY	EMBANKMENT (TY B) (ORD COMP)

55	18	110	152	174	141	112	120	120	114	55	69
56	25	108	75	102	75	2	10	20	12	2	0

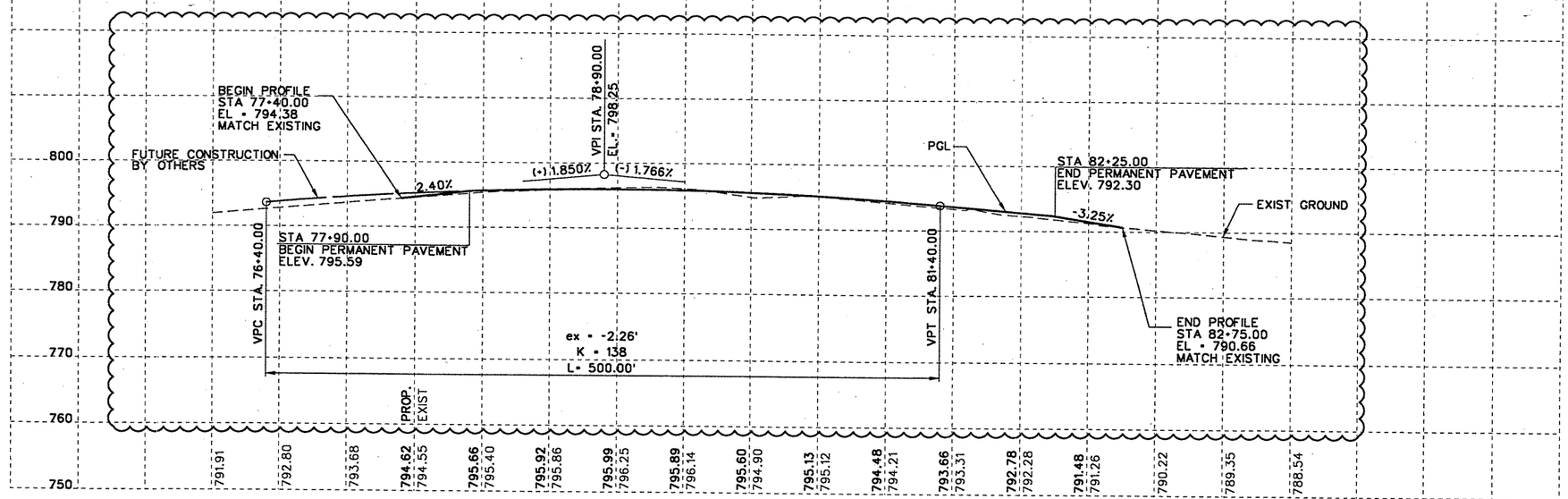

STATE OF TEXAS
JAMES J. ROCHMS
83383
LICENSED
PROFESSIONAL ENGINEER
12/10/04

NO.	REVISION	BY	DATE
CO 1	UPDATED SBFR PROFILE	AJW	12/08/04

Chiang, Patel & Yerby, Inc.

© 2004

Texas Department of Transportation

SH 29

ROADWAY PLAN & PROFILE

IH 35 SBFR

		FED. ROAD DIV. NO.	STATE	FEDERAL AID PROJECT NO.				SHEET NO.
Designed:	AJW	6	TEXAS	CC 337-1-29				77
Checked:	JJR	STATE DIST. NO.	COUNTY	CONTROL NO.	SECTION NO.	JOB NO.	HIGHWAY NO.	
Drawn:	AJW	14	WILLIAMSON	0337	01	029	SH 29	
Checked:	JJR							

8 OF 8

...\wa3\WEST\common\533Wppis01.100 12/9/2004 1:01:32 PM

SH 29 AND CR 265 WEST

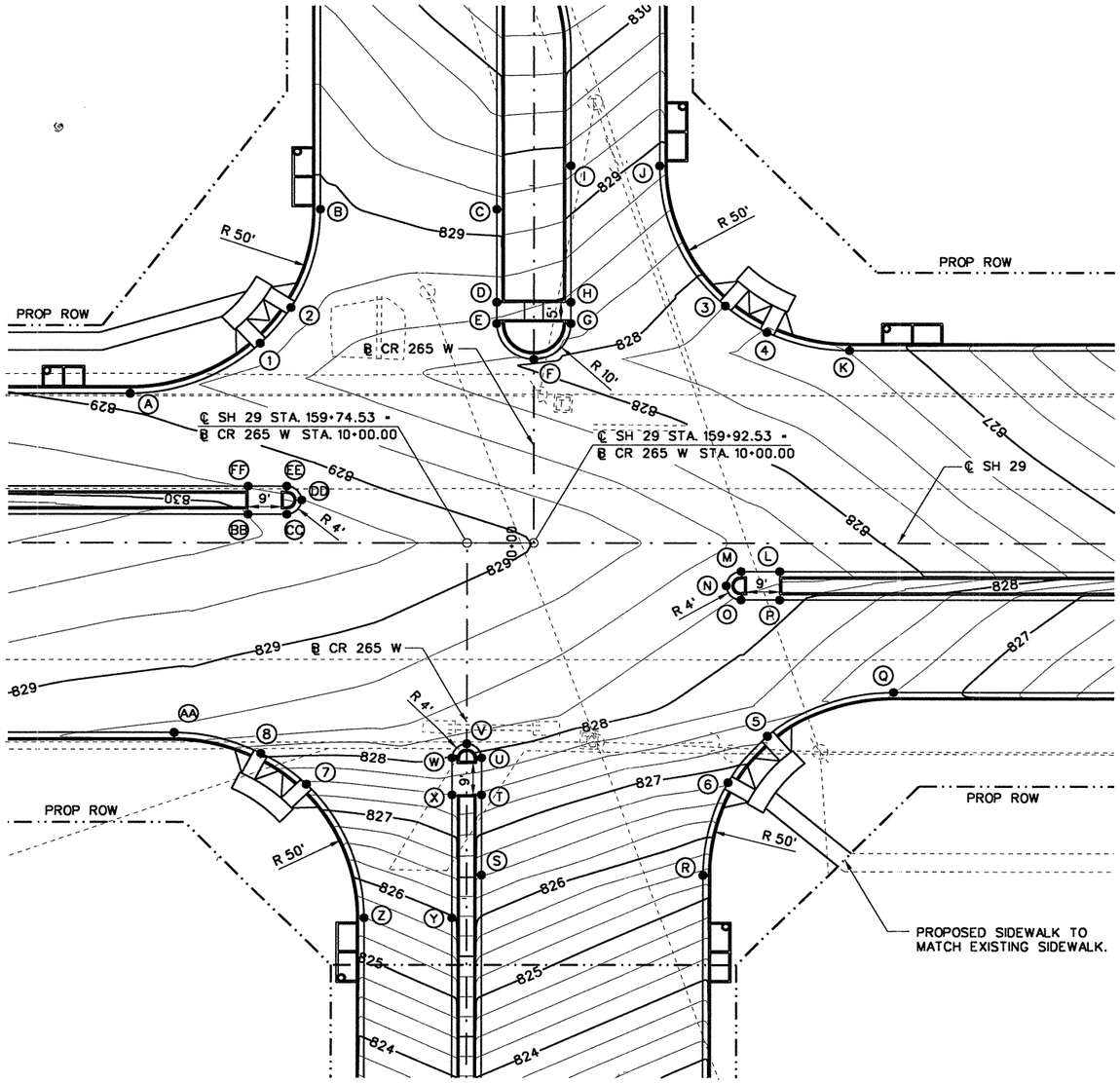

PT	PT DESCRIP.	℄	STA.	OFFSET (FT)	ELEV.
A	PCR	SH29	158+83.03	-42.00	828.91
B	PTR	CR265W	10+93.50	-58.00	828.92
C	EOP	CR265W	10+93.50	-10.00	829.17
D	EOP	CR265W	10+67.50	-10.00	828.59
E	PCR	CR265W	10+61.50	-10.00	828.47
F	EOP	CR265W	10+51.50	0.00	828.19
G	PTR	CR265W	10+61.50	10.00	828.32
H	EOP	CR265W	10+67.50	10.00	828.45
I	EOP	CR265W	11+05.50	10.00	829.32
J	PCR	CR265W	11+05.50	34.00	828.84
K	PTR	SH29	160+78.04	-54.00	827.24
L	EOP	SH29	160+59.25	8.00	828.35
M	PCR	SH29	160+48.75	8.00	828.36
N	EOP	SH29	160+44.75	12.00	828.32
O	PTR	SH29	160+48.75	16.00	828.24
P	EOP	SH29	160+59.25	16.00	828.10
Q	PTR	SH29	160+90.03	42.00	827.25
R	PCR	CR265W	9+06.50	64.00	825.41
S	EOP	CR265W	9+06.50	4.00	826.52
T	EOP	CR265W	9+28.50	4.00	827.46
U	PTR	CR265W	9+39.00	4.00	827.92
V	EOP	CR265W	9+43.00	0.00	828.12
W	PCR	CR265W	9+39.00	-4.00	827.98
X	EOP	CR265W	9+28.50	-4.00	827.50
Y	EOP	CR265W	8+94.50	-4.00	825.97
Z	PTR	CR265W	8+94.50	-28.00	825.49
AA	PCR	SH29	158+95.03	54.00	828.70
BB	EOP	SH29	159+15.00	-8.00	829.49
CC	PCR	SH29	159+25.50	-8.00	829.33
DD	EOP	SH29	159+29.50	-12.00	829.25
EE	PTR	SH29	159+25.50	-16.00	829.20
FF	EOP	SH29	159+15.00	-16.00	829.24

CURB RAMPS AND LANDINGS (TY 1)

PT	℄	STA.	OFFSET (FT)	ELEV.
1	SH29	159+18.28	-55.95	828.87
2	SH29	159+26.58	-66.00	828.88
3	SH29	160+44.40	-66.50	827.75
4	SH29	160+55.73	-59.08	827.48
5	SH29	160+55.98	54.86	827.32
6	SH29	160+45.29	68.00	826.79
7	SH29	159+30.85	68.51	827.45
8	SH29	159+18.53	59.67	828.09

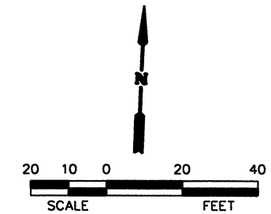

NOTES:

1. SEE INTERSECTING STREET PROFILES FOR CENTERLINE PGL INFORMATION.
2. SPOT ELEVATIONS ARE PROVIDED AT LIP OF GUTTER/EDGE OF PAVEMENT OR CENTERLINE UNLESS NOTED OTHERWISE.
3. CURB RADII SHOWN ARE TO THE FACE OF CURB UNLESS NOTED OTHERWISE.
4. FOR FURTHER INFORMATION SEE HORIZONTAL ALIGNMENT DATA SHEET.
5. OFFSETS SHOWN AS POSITIVE ARE TO THE RIGHT OF BASELINE. OFFSETS SHOWN AS NEGATIVE ARE TO THE LEFT OF BASELINE.
6. REFER TO THE ROADWAY PLAN AND PROFILE SHEETS FOR ADDITIONAL INFORMATION.

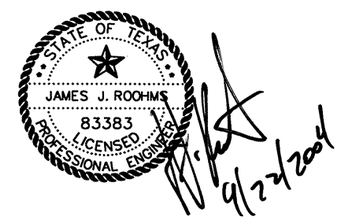

NO.	REVISION	BY	DATE

CP&Y Chiang, Patel & Yerby, Inc.

© 2004

Texas Department of Transportation

SH 29

INTERSECTION LAYOUTS
CR 265 WEST

		FED. ROAD DIV. NO.	STATE	FEDERAL AID PROJECT NO.			SHEET NO.
Designed:	GJT	6	TEXAS	CC 337-1-29			78
Checked:	JJR	STATE DIST. NO.	COUNTY	CONTROL NO.	SECTION NO.	JOB NO.	HIGHWAY NO.
Drawn:	GJT	14	WILLIAMSON	0337	01	029	SH 29
Checked:	JJR						

SH 29 AND CR 265 EAST

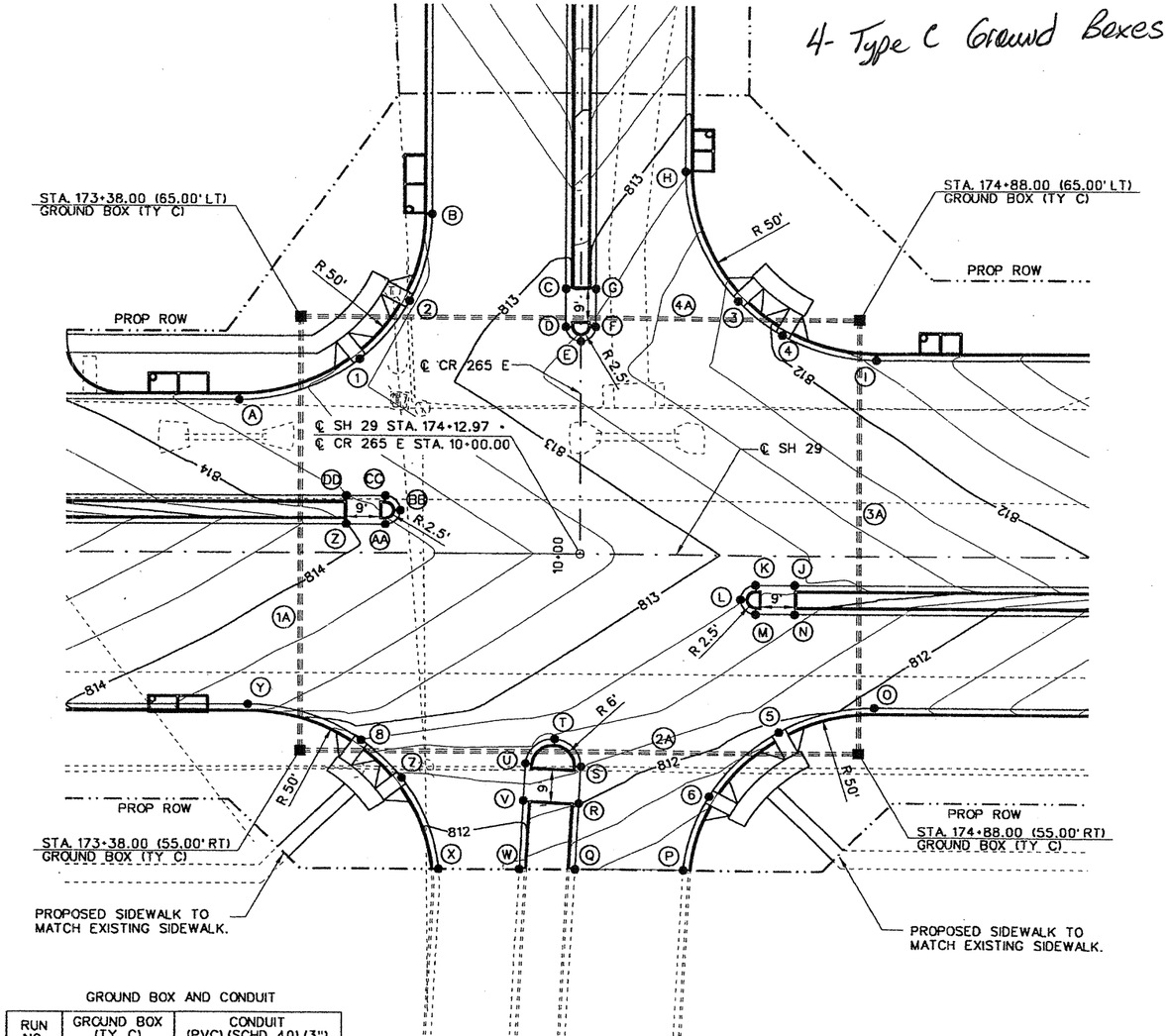

GROUND BOX AND CONDUIT

RUN NO.	GROUND BOX (TY C) EA	CONDUIT (PVC) (SCHD 40) (3") LF
1A	1	3-120
2A	1	3-150
3A	1	3-120
4A	1	3-150
TOTAL	4	1620

PT	PT DESCRIP.	℄	STA.	OFFSET (FT)	ELEV.
A	PCR	SH29	173+21.48	-42.00	813.59
B	PTR	CR265E	10+93.50	-40.00	813.20
C	EOP	CR265E	10+73.00	-4.00	812.91
D	PCR	CR265E	10+62.50	-4.00	812.80
E	EOP	CR265E	10+58.57	0.00	812.72
F	PTR	CR265E	10+62.50	4.00	812.73
G	EOP	CR265E	10+73.00	4.00	812.84
H	PCR	CR265E	11+05.50	28.00	812.78
I	PTR	SH29	174+92.48	-54.00	811.71
J	EOP	SH29	174+70.55	8.00	812.78
K	PCR	SH29	174+60.05	8.00	812.78
L	EOP	SH29	174+56.05	12.00	812.76
M	PTR	SH29	174+60.05	16.00	812.66
N	EOP	SH29	174+70.55	16.00	812.55
O	PTR	SH29	174+92.16	42.00	811.91
P	PCR	SH29	174+40.92	88.27	811.27
Q	EOP	SH29	174+11.82	88.29	811.56
R	EOP	SH29	174+12.79	69.81	812.01
S	PTR	SH29	174+13.34	59.32	812.27
T	EOP	SH29	174+06.27	51.44	812.42
U	PCR	SH29	173+98.36	58.47	812.39
V	EOP	SH29	173+97.81	69.02	812.13
W	EOP	SH29	173+96.80	88.30	811.71
X	PTR	SH29	173+75.17	88.30	811.92
Y	PCR	SH29	173+23.93	42.00	813.58
Z	EOP	SH29	173+50.25	-8.00	814.00
AA	PCR	SH29	173+60.75	-8.00	813.78
BB	EOP	SH29	173+64.75	-12.00	813.68
CC	PTR	SH29	173+60.75	-16.00	813.66
DD	EOP	SH29	173+50.25	-16.00	813.76

CURB RAMPS AND LANDINGS (TY 1)

PT	℄	STA.	OFFSET (FT)	ELEV.
1	SH29	173+53.75	-53.37	813.44
2	SH29	173+67.04	-69.50	813.32
3	SH29	174+55.17	-70.00	812.17
4	SH29	174+67.05	-60.72	811.96
5	SH29	174+66.32	49.00	811.85
6	SH29	174+47.75	67.51	811.57
7	SH29	173+65.21	62.77	812.21
8	SH29	173+54.35	51.99	812.67

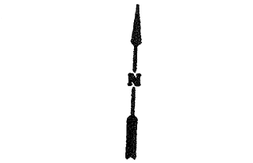

NOTES:

SEE SHEET 1 OF 4.

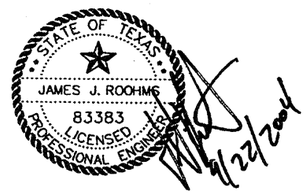

C.O.#9

NO.	REVISION	BY	DATE

CP&Y Chiang, Patel & Yerby, Inc.

© 2004

Texas Department of Transportation

SH 29

INTERSECTION LAYOUTS
CR 265 EAST

		FED. ROAD DIV. NO.	STATE	FEDERAL AID PROJECT NO.			SHEET NO.
Designed:	GJT	6	TEXAS	CC 337-1-29			79
Checked:	JJR	STATE DIST. NO.	COUNTY	CONTROL NO.	SECTION NO.	JOB NO.	HIGHWAY NO.
Drawn:	GJT	14	WILLIAMSON	0337	01	029	SH 29
Checked:	JJR						

SH 29 AND CR 265 EAST

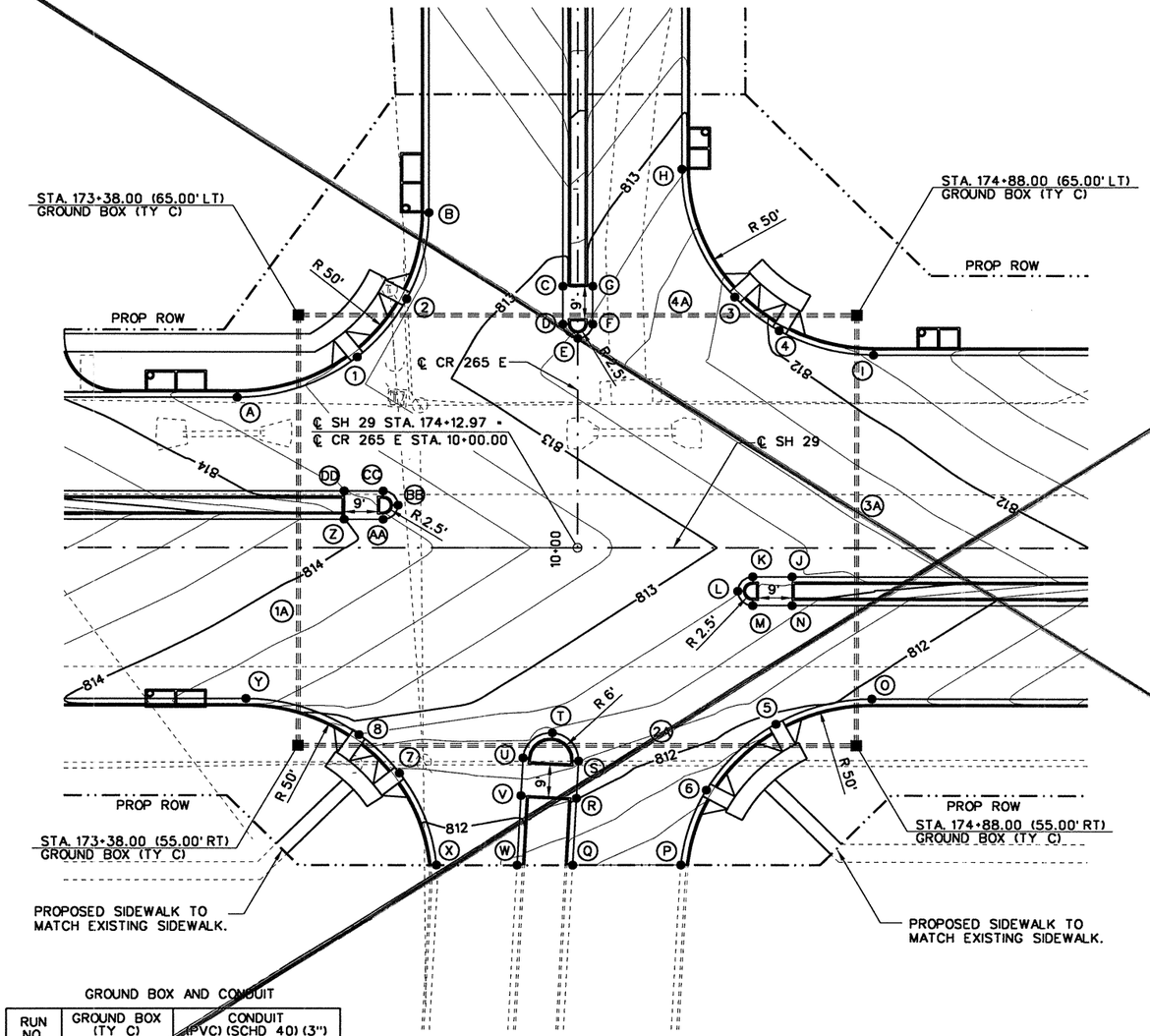

PT	PT DESCRIP.	℄	STA.	OFFSET (FT)	ELEV.
A	PCR	SH29	173+21.48	-42.00	813.59
B	PTR	CR265E	10+93.50	-40.00	813.20
C	EOP	CR265E	10+73.00	-4.00	812.91
D	PCR	CR265E	10+62.50	-4.00	812.80
E	EOP	CR265E	10+58.57	0.00	812.72
F	PTR	CR265E	10+62.50	4.00	812.73
G	EOP	CR265E	10+73.00	4.00	812.84
H	PCR	CR265E	11+05.50	28.00	812.78
I	PTR	SH29	174+92.48	-54.00	811.71
J	EOP	SH29	174+70.55	8.00	812.78
K	PCR	SH29	174+60.05	8.00	812.78
L	EOP	SH29	174+56.05	12.00	812.76
M	PTR	SH29	174+60.05	16.00	812.66
N	EOP	SH29	174+70.55	16.00	812.55
O	PTR	SH29	174+92.16	42.00	811.91
P	PCR	SH29	174+40.92	88.27	811.27
Q	EOP	SH29	174+11.82	88.29	811.56
R	EOP	SH29	174+12.79	69.81	812.01
S	PTR	SH29	174+13.34	59.32	812.27
T	EOP	SH29	174+06.27	51.44	812.42
U	PCR	SH29	173+98.36	58.47	812.39
V	EOP	SH29	173+97.81	69.02	812.13
W	EOP	SH29	173+96.80	88.30	811.71
X	PTR	SH29	173+75.17	88.30	811.92
Y	PCR	SH29	173+23.93	42.00	813.58
Z	EOP	SH29	173+50.25	-8.00	814.00
AA	PCR	SH29	173+60.75	-8.00	813.78
BB	EOP	SH29	173+64.75	-12.00	813.68
CC	PTR	SH29	173+60.75	-16.00	813.66
DD	EOP	SH29	173+50.25	-16.00	813.76

CURB RAMPS AND LANDINGS (TY 1)

PT	℄	STA.	OFFSET (FT)	ELEV.
1	SH29	173+53.75	-53.37	813.44
2	SH29	173+67.04	-69.50	813.32
3	SH29	174+55.17	-70.00	812.17
4	SH29	174+67.05	-60.72	811.96
5	SH29	174+66.32	49.00	811.85
6	SH29	174+47.75	67.51	811.57
7	SH29	173+65.21	62.77	812.21
8	SH29	173+54.35	51.99	812.67

GROUND BOX AND CONDUIT

RUN NO.	GROUND BOX (TY C) EA	CONDUIT (PVC) (SCHD 40) (3") LF
1A	1	3-120
2A	1	3-150
3A	1	3-120
4A	1	3-150
TOTAL	4	1620

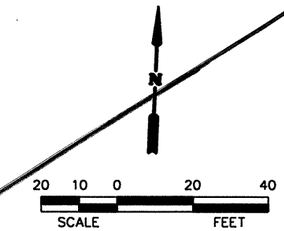

NOTES:

SEE SHEET 1 OF 4.

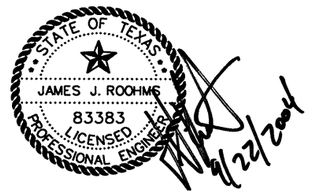

NO.	REVISION	BY	DATE

Chiang, Patel & Yerby, Inc.

© 2004

Texas Department of Transportation

SH 29

INTERSECTION LAYOUTS
CR 265 EAST

		FED. ROAD DIV. NO.	STATE	FEDERAL AID PROJECT NO.			SHEET NO.
Designed:	GJT	6	TEXAS	CC 337-1-29			79
Checked:	JJR	STATE DIST. NO.	COUNTY	CONTROL NO.	SECTION NO.	JOB NO.	HIGHWAY NO.
Drawn:	GJT	14	WILLIAMSON	0337	01	029	SH 29
Checked:	JJR						

SH 29 AND IH 35 FRONTAGE

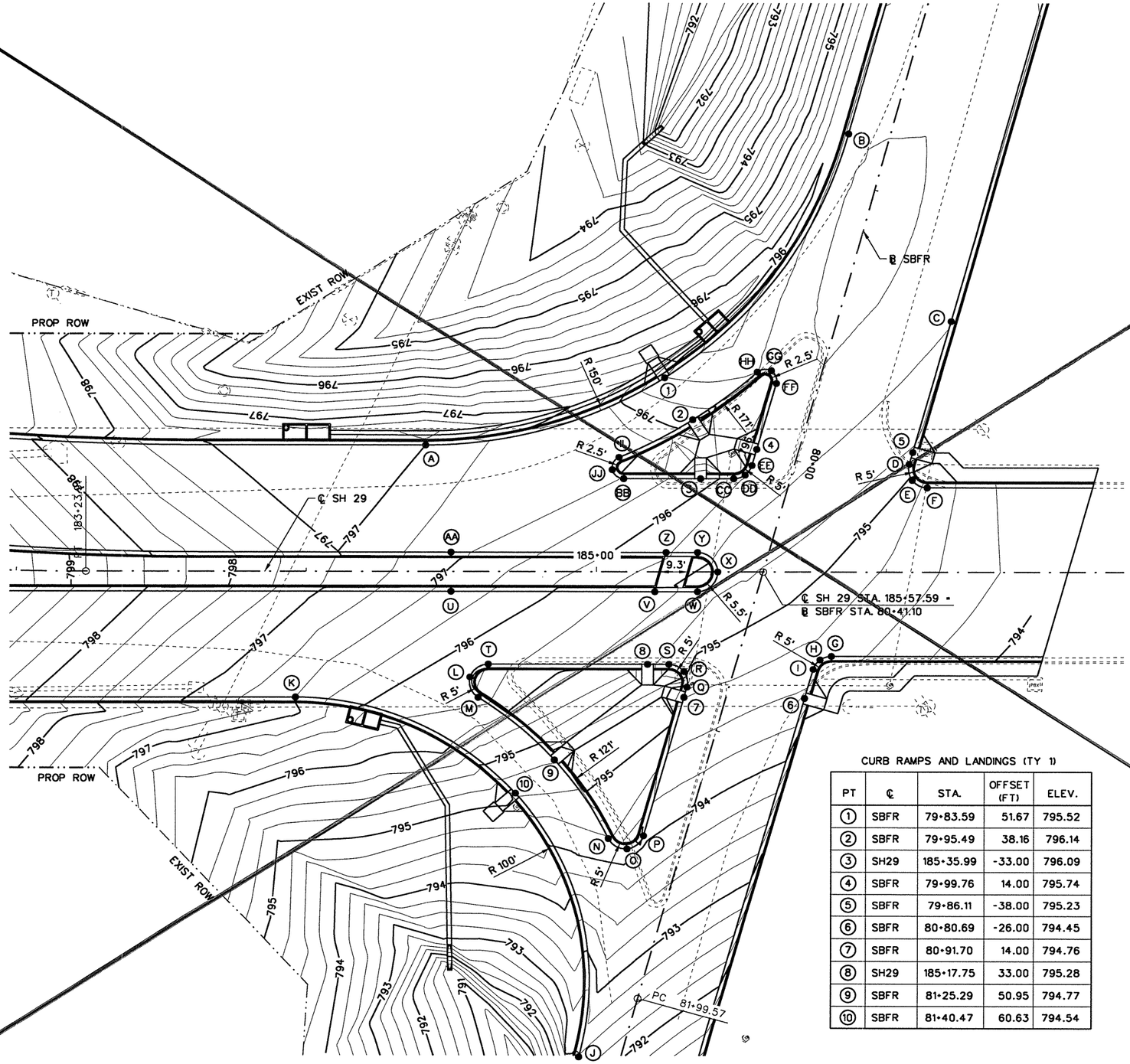

PT	PT DESCRIP.	℄	STA.	OFFSET (FT)	ELEV.
Ⓐ	PCR	SH29	181+41.10	-45.00	797.00
Ⓑ	PTR	SBFR	78+83.64	14.00	795.72
Ⓒ	EOP	SBFR	79+37.13	-38.00	795.51
Ⓓ	PCR	SBFR	79+90.60	-38.00	795.19
Ⓔ	EOP	SH29	186+08.95	-32.58	794.94
Ⓕ	PTR	SH29	186+14.14	-30.00	794.68
Ⓖ	PCR	SH29	185+81.06	30.00	794.63
Ⓗ	EOP	SH29	185+77.13	31.32	794.62
Ⓘ	PTR	SBFR	82+69.85	-26.00	794.59
Ⓙ	PTR	SBFR	82+25.00	14.00	792.48
Ⓚ	PCR	SH29	183+96.33	45.00	796.50
Ⓛ	EOP	SH29	184+56.61	37.72	795.85
Ⓜ	PCR	SH29	184+59.43	45.02	795.90
Ⓝ	PTR	SBFR	81+47.28	25.40	794.25
Ⓞ	EOP	SBFR	81+49.09	18.22	794.13
Ⓟ	PCR	SBFR	81+43.01	14.00	794.06
Ⓠ	PTR	SBFR	80+87.93	14.00	794.80
Ⓡ	EOP	SH29	185+30.32	35.58	795.09
Ⓢ	PCR	SH29	185+25.14	33.00	795.20
Ⓣ	PTR	SH29	184+62.86	33.00	795.86
Ⓤ	EOP	SH29	184+50.00	7.00	796.41
Ⓥ	EOP	SH29	185+20.20	7.00	795.59
Ⓦ	PTR	SH29	185+35.00	7.00	795.42
Ⓧ	EOP	SH29	185+42.00	0.00	795.42
Ⓨ	PCR	SH29	185+35.00	-7.00	795.64
Ⓩ	EOP	SH29	185+24.10	-7.00	795.77
ⒶⒶ	EOP	SH29	184+50.00	-7.00	796.57
ⒷⒷ	PCR	SH29	185+09.38	-33.00	796.47
ⒸⒸ	PTR	SH29	185+47.44	-33.00	795.93
ⒹⒹ	EOP	SH29	185+51.36	-34.32	795.77
ⒺⒺ	PCR	SBFR	80+05.84	14.00	795.70
ⒻⒻ	PTR	SBFR	79+75.00	14.00	795.82
ⒼⒼ	EOP	SBFR	79+71.15	16.91	795.64
ⒽⒽ	PCR	SBFR	79+72.89	21.40	795.50
Ⓘ	PTR	SH29	185+07.81	-40.68	796.64
ⒿⒿ	EOP	SH29	185+05.46	-36.20	796.70

CURB RAMPS AND LANDINGS (TY 1)

PT	℄	STA.	OFFSET (FT)	ELEV.
①	SBFR	79+83.59	51.67	795.52
②	SBFR	79+95.49	38.16	796.14
③	SH29	185+35.99	-33.00	796.09
④	SBFR	79+99.76	14.00	795.74
⑤	SBFR	79+86.11	-38.00	795.23
⑥	SBFR	80+80.69	-26.00	794.45
⑦	SBFR	80+91.70	14.00	794.76
⑧	SH29	185+17.75	33.00	795.28
⑨	SBFR	81+25.29	50.95	794.77
⑩	SBFR	81+40.47	60.63	794.54

50 25 0 50 100
SCALE FEET

NOTES:

SEE SHEET 1 OF 4.

STATE OF TEXAS
JAMES J. ROOHMS
83383
LICENSED
PROFESSIONAL ENGINEER
9/22/04

NO.	REVISION	BY	DATE

CP&Y Chiang, Patel & Yerby, Inc.

© 2004

Texas Department of Transportation

SH 29

INTERSECTION LAYOUTS
IH 35 SBFR

		FED. ROAD DIV. NO.	STATE	FEDERAL AID PROJECT NO.				SHEET NO.
Designed:	GJT	6	TEXAS	CC 337-1-29				80
Checked:	JJR	STATE DIST. NO.	COUNTY	CONTROL NO.	SECTION NO.	JOB NO.	HIGHWAY NO.	
Drawn:	GJT	14	WILLIAMSON	0337	01	029	SH 29	
Checked:	JJR							

3 OF 4

...\wa3\west\common\533wi103.040 09/21/2004 04:57:40 PM

SH 29 AND IH 35 FRONTAGE

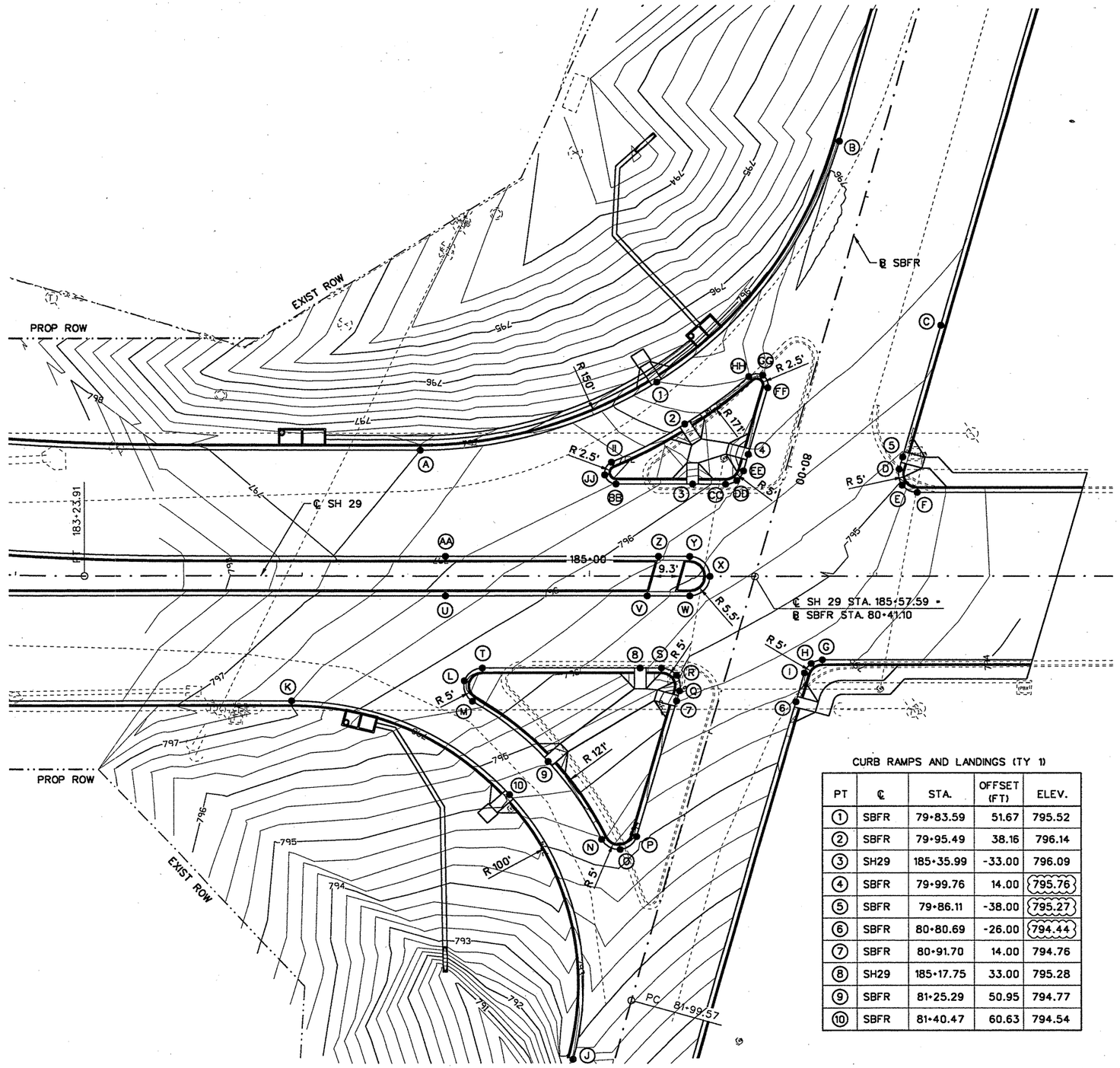

PT	PT DESCRIP.	℄	STA.	OFFSET (FT)	ELEV.
A	PCR	SH29	181+41.10	-45.00	797.00
B	PTR	SBFR	78+83.64	14.00	795.98
C	EOP	SBFR	79+37.13	-38.00	795.62
D	PCR	SBFR	79+90.60	-38.00	795.23
E	EOP	SH29	186+08.95	-32.58	794.84
F	PTR	SH29	186+14.14	-30.00	794.68
G	PCR	SH29	185+81.06	30.00	794.63
H	EOP	SH29	185+77.13	31.32	794.62
I	PTR	SBFR	82+69.85	-26.00	794.58
J	PTR	SBFR	82+25.00	14.00	792.78
K	PCR	SH29	183+96.33	45.00	796.50
L	EOP	SH29	184+56.61	37.72	795.85
M	PCR	SH29	184+59.43	45.02	795.90
N	PTR	SBFR	81+47.28	25.40	794.25
O	EOP	SBFR	81+49.09	18.22	794.18
P	PCR	SBFR	81+43.01	14.00	794.08
Q	PTR	SBFR	80+87.93	14.00	794.80
R	EOP	SH29	185+30.32	35.58	795.10
S	PCR	SH29	185+25.14	33.00	795.20
T	PTR	SH29	184+62.86	33.00	795.86
U	EOP	SH29	184+50.00	7.00	796.41
V	EOP	SH29	185+20.20	7.00	795.59
W	PTR	SH29	185+35.00	7.00	795.42
X	EOP	SH29	185+42.00	0.00	795.42
Y	PCR	SH29	185+35.00	-7.00	795.64
Z	EOP	SH29	185+24.10	-7.00	795.77
AA	EOP	SH29	184+50.00	-7.00	796.57
BB	PCR	SH29	185+09.38	-33.00	796.47
CC	PTR	SH29	185+47.44	-33.00	795.93
DD	EOP	SH29	185+51.36	-34.32	795.87
EE	PCR	SBFR	80+05.84	14.00	795.72
FF	PTR	SBFR	79+75.00	14.00	795.90
GG	EOP	SBFR	79+71.15	16.91	795.72
HH	PCR	SBFR	79+72.89	21.40	795.50
II	PTR	SH29	185+07.81	-40.68	796.64
JJ	EOP	SH29	185+05.46	-36.20	796.70

CURB RAMPS AND LANDINGS (TY 1)

PT	℄	STA.	OFFSET (FT)	ELEV.
1	SBFR	79+83.59	51.67	795.52
2	SBFR	79+95.49	38.16	796.14
3	SH29	185+35.99	-33.00	796.09
4	SBFR	79+99.76	14.00	795.76
5	SBFR	79+86.11	-38.00	795.27
6	SBFR	80+80.69	-26.00	794.44
7	SBFR	80+91.70	14.00	794.76
8	SH29	185+17.75	33.00	795.28
9	SBFR	81+25.29	50.95	794.77
10	SBFR	81+40.47	60.63	794.54

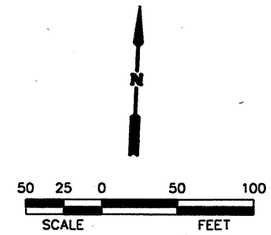

NOTES:

SEE SHEET 1 OF 4.

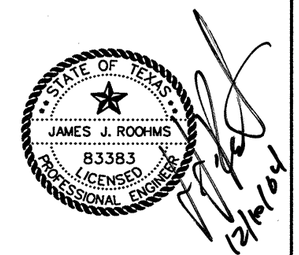

NO.	REVISION	BY	DATE
CO 1	UPDATED SBFR PROFILE	AJW	12/08/04

CP&Y Chiang, Patel & Yerby, Inc.

© 2004

Texas Department of Transportation

SH 29

INTERSECTION LAYOUTS
IH 35 SBFR

		FED. ROAD DIV. NO.	STATE	FEDERAL AID PROJECT NO.			SHEET NO.
Designed:	GJT	6	TEXAS	CC 337-1-29			80
Drawn:	GJT	STATE DIST. NO.	COUNTY	CONTROL NO.	SECTION NO.	JOB NO.	HIGHWAY NO.
Checked:	JJR	14	WILLIAMSON	0337	01	029	SH 29

CR 265E AND EXIST CR 265

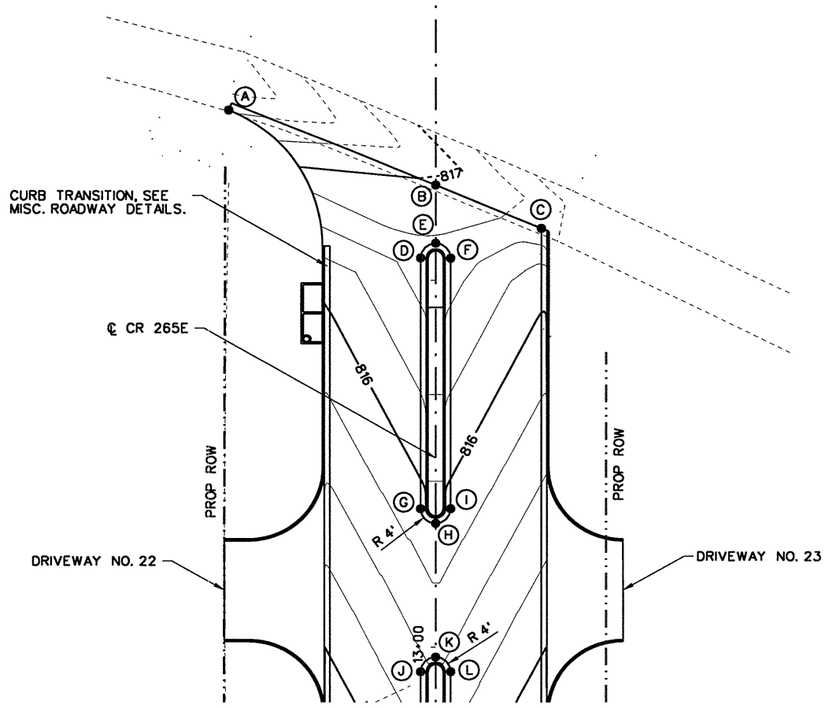

PT	PT DESCRIP.	℄	STA.	OFFSET (FT)	ELEV.
A	EOP	CR265E	14+46.17	-54.66	817.53
B	℄	CR265E	14+25.64	0.00	816.95
C	EOP	CR265E	14+14.01	28.00	816.66
D	PCR	CR265E	14+06.04	-4.00	816.64
E	EOP	CR265E	14+09.97	0.00	816.71
F	PTR	CR265E	14+05.97	4.00	816.64
G	PCR	CR265E	13+37.89	-4.00	815.91
H	EOP	CR265E	13+33.89	0.00	815.90
I	PTR	CR265E	13+37.89	4.00	815.91
J	PCR	CR265E	12+93.29	-4.00	815.44
K	EOP	CR265E	12+97.29	0.00	815.53
L	PTR	CR265E	12+93.29	4.00	815.44

CR 265W AND EXIST CR 265

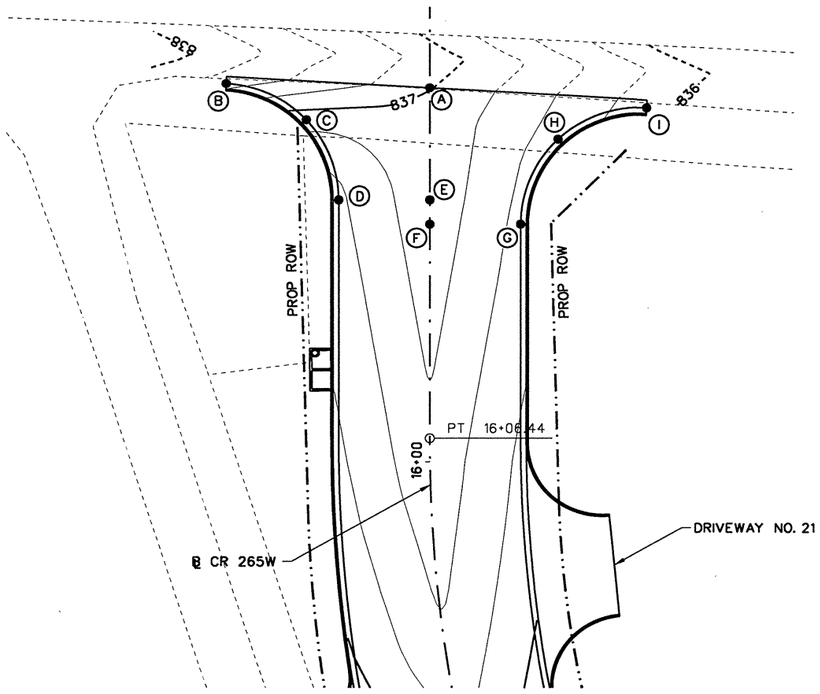

PT	PT DESCRIP.	℄	STA.	OFFSET (FT)	ELEV.
A	℄	CR265W	17+01.41	0.00	837.01
B	PTR	CR265W	17+02.56	-53.65	837.68
C	EOP	CR265W	16+92.72	-32.58	836.88
D	PCR	CR265W	16+71.11	-24.00	836.46
E	℄	CR265W	16+71.11	0.00	836.93
F	℄	CR265W	16+64.53	0.00	836.91
G	PCR	CR265W	16+64.53	24.00	836.43
H	EOP	CR265W	16+87.45	33.89	836.38
I	PTR	CR265W	16+95.98	57.35	836.12

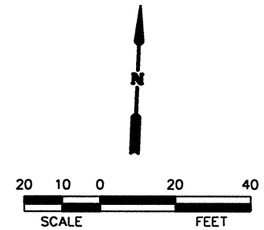

NOTES:

SEE SHEET 1 OF 4.

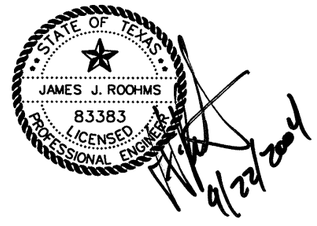

NO.	REVISION	BY	DATE

CP&Y Chiang, Patel & Yerby, Inc.

© 2004

Texas Department of Transportation

SH 29

INTERSECTION LAYOUTS

CR 265 WEST AND EAST

		FED. ROAD DIV. NO.	STATE	FEDERAL AID PROJECT NO.			SHEET NO.
Designed:	GJT	6	TEXAS	CC 337-1-29			81
Checked:	JJR	STATE DIST. NO.	COUNTY	CONTROL NO.	SECTION NO.	JOB NO.	HIGHWAY NO.
Drawn:	GJT	14	WILLIAMSON	0337	01	029	SH 29
Checked:	JJR						

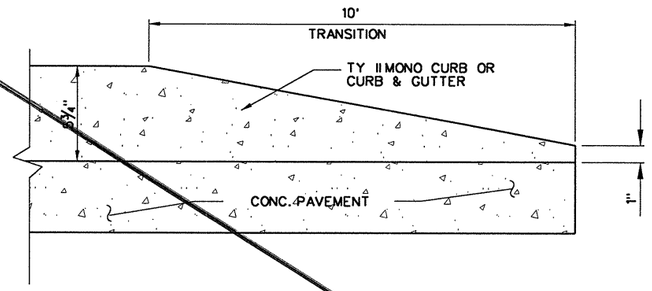

TY II CURB TRANSITION

SCALE: NTS

PAYMENT FOR CURB TRANSITION WILL BE PAID FOR UNDER ITEM 360 "CONC CURB & GUTTER (TY II)" OR ITEM 360 "MONO CURB (TY II)".

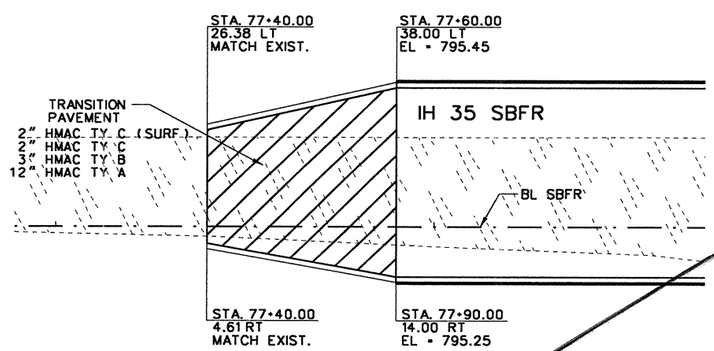

NORTH IH 35 SBFR

SCALE: NTS

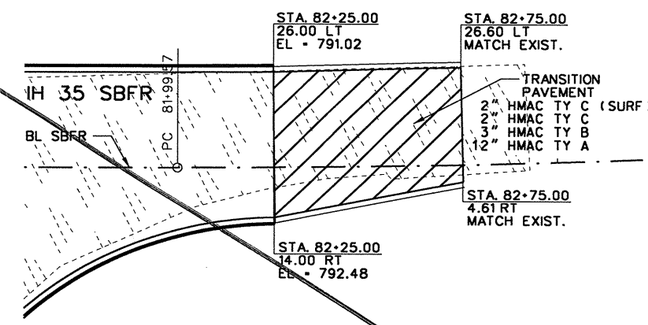

SOUTH IH 35 SBFR

SCALE: NTS

STATE OF TEXAS
ROBIN R. HANDEL
86931
LICENSED
PROFESSIONAL ENGINEER
9/22/2004

NO.	REVISION	BY	DATE

Chiang, Patel & Yerby, Inc.

© 2004

Texas Department of Transportation

SH 29

MISCELLANEOUS ROADWAY DETAILS

		FED. ROAD DIV. NO.	STATE	FEDERAL AID PROJECT NO.	SHEET NO.
Designed:	DHS	6	TEXAS	CC 337-1-29	82
Checked:	SML	STATE DIST. NO.	COUNTY	CONTROL NO. / SECTION NO. / JOB NO.	HIGHWAY NO.
Drawn:	DHS	14	WILLIAMSON	0337 / 01 / 023	SH 29
Checked:	JJR				

1 OF 1

...\wa3\west\common\533wmd01.001 09/21/2004 04:57:13 PM

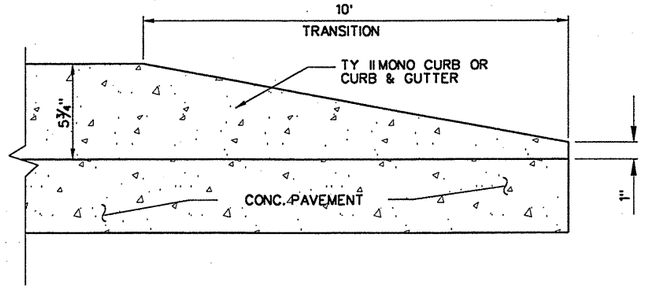

TY II CURB TRANSITION

SCALE: NTS

PAYMENT FOR CURB TRANSITION WILL BE PAID FOR UNDER ITEM 360 "CONC CURB & GUTTER (TY II)" OR ITEM 360 "MONO CURB (TY II)".

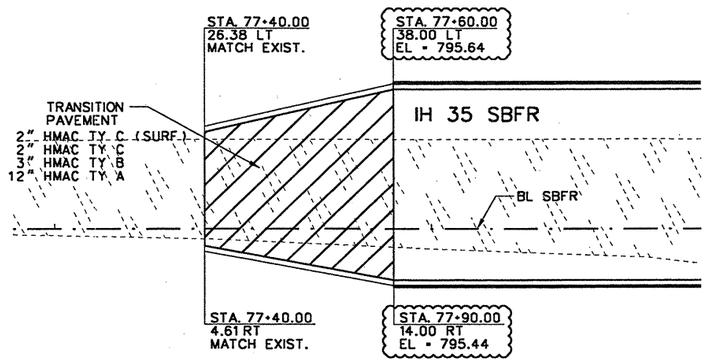

NORTH IH 35 SBFR

SCALE: NTS

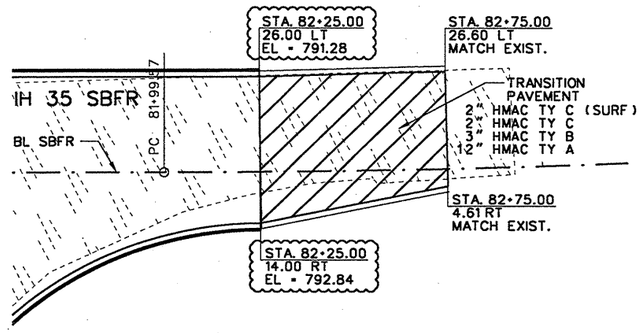

SOUTH IH 35 SBFR

SCALE: NTS

STATE OF TEXAS
JAMES J. ROOHMS
83383
LICENSED
PROFESSIONAL ENGINEER
12/10/04

NO.	REVISION	BY	DATE
CO 1	UPDATED SBFR PROFILE	AJW	12/08/04

CP&Y Chiang, Patel & Yerby, Inc.

© 2004

Texas Department of Transportation

SH 29

MISCELLANEOUS ROADWAY DETAILS

		FED. ROAD DIV. NO.	STATE	FEDERAL AID PROJECT NO.				SHEET NO.
Designed:	DHS	6	TEXAS	CC 337-1-29				82
Checked:	SML	STATE DIST. NO.	COUNTY		CONTROL NO.	SECTION NO.	JOB NO.	HIGHWAY NO.
Drawn:	DHS	14	WILLIAMSON		0337	01	029	SH 29
Checked:	JJR							

1 OF 1

...\wa3\WEST\common\533Wmd01.001 12/9/2004 1:54:51 PM

PROPOSED CONCRETE IMPROVEMENTS

EXISTING DRIVE TO BE REMOVED

E.O.C. EDGE OF CONCRETE

B.O.C. BACK OF CURB

NORTH

0 10 20

GRAPHIC SCALE IN FEET

NOTES:

1. CONTRACTOR SHALL ADJUST ALL VALVE BOXES AND WATER METERS TO FINAL GRADE.
2. CONTRACTOR SHALL MATCH EXISTING GRADE OF STREET EXCEPT WHERE NOTED.
3. CONTRACTOR SHALL SHALL SAWCUT ALL AREAS WHERE PROPOSED IMPROVEMENTS MATCHES EXISTING.
4. ALL COORDINATES SHOWN ARE SET TO THE CITY OF GEORGETOWN, TEXAS COORDINATE SYSTEM.
5. EXPANSION JOINTS SHALL BE PLACED AT ALL CONNECTIONS TO EXISTING PAVING AND OBSTRUCTIONS.
6. EXPANSION JOINTS SHALL BE 3/4" ASPHALT IMPREGNATED FIBERBOARD.

EXISTING METAL BUILDING

EXISTING CANOPY

EXISTING DRIVE THRU & CANOPY

EXISTING CONCRETE

EXISTING PAVEMENT

EXISTING EDGE OF PAVEMENT

MATCH EXISTING ELEV. 835.80

MATCH EXISTING ELEV. 835.20

MATCH EXISTING ELEV. 834.80

MATCH EXISTING ELEV. 834.38

MATCH EXISTING ELEV. 834.35

MATCH EXISTING ELEV. 834.01

MATCH EXISTING ELEV. 832.21

MATCH EXISTING ELEV. 832.07

E.O.C. ELEV. 837.10

E.O.C. ELEV. 838.02

10:1 SLOPE TO TIE INTO NATURAL GROUND

PROPOSED EDGE OF CONCRETE

EXPOSED CONCRETE BREAKLINE

EXPANSION JOINT

SAW CUT EXISTING CONCRETE

PROPOSED 4' CONC. VALLEY GUTTER

POUR VALLEY GUTTER AROUND POWER POLE

TO BE REMOVED BY OTHERS

STA. 8+41.04
OFFSET 79.30'
E.O.C. ELEV. 837.16

STA. 7+99.24
OFFSET 77.86'
E.O.C. ELEV. 836.44

STA. 7+92.01
OFFSET 91.93'
E.O.C. ELEV. 836.00

STA. 8+12.49
OFFSET 88.88'
E.O.C. ELEV. 836.12

STA. 8+21.63
OFFSET 79.39'
E.O.C. ELEV. 836.59

STA. 7+57.65
OFFSET 89.99'
E.O.C. ELEV. 834.72

STA. 7+93.17
OFFSET 77.00'
E.O.C. 836.30

STA. 7+87.87
OFFSET 75.23'
E.O.C. 835.70

STA. 8+00.56
OFFSET 62.74'+

STA. 7+94.08+
OFFSET 62.38

STA. 8+39.89
OFFSET 58.59
E.O.C. ELEV. 836.12

STA. 8+57.63+
OFFSET 58.52

STA. 8+17.50
OFFSET 58.83'
E.O.C. ELEV. 835.68

STA. 7+19.37
OFFSET 91.45'
E.O.C. ELEV. 834.26
BEGIN TRANSITION TO WEST-EAST CROSS SLOPE

STA. 7+43.13
OFFSET 90.10'
E.O.C. ELEV. 834.30

STA. 7+42.85
OFFSET 75.10'
E.O.C. ELEV. 835.15

STA. 7+57.77
OFFSET 74.99
E.O.C. ELEV. 835.49

STA. 7+18.42
OFFSET 76.50'
E.O.C. ELEV. 834.57

STA. 6+65.82
OFFSET 75.59'
E.O.C. ELEV. 833.87

STA. 6+50.52
OFFSET 71.57'
E.O.C. ELEV. 833.40

STA. 6+68.35
OFFSET 63.60'

STA. 6+78.79
OFFSET 78.80'
E.O.C. ELEV. 833.85

STA. 6+74.67
OFFSET 65.25'

STA. 7+10.88
OFFSET 44.79'
B.O.C. ELEV. 833.67

STA. 7+93.33
OFFSET 42.38'
B.O.C. ELEV. 834.93

STA. 8+10.81
OFFSET 41.49'
B.O.C. ELEV. 835.20

STA. 8+57.05
OFFSET 38.54
B.O.C. ELEV. 835.90

STA. 8+38.92
OFFSET 39.80'
B.O.C. ELEV. 835.10

PT: 9+02.20
N 10204304.13
E 3124467.82

STA. 8+50.00
OFFSET 15.34'
ASPHALT ELEV. 836.16

STA. 5+97.62
OFFSET 74.80'
E.O.C. ELEV. 831.99

STA. 6+00.00
OFFSET 66.51'

STA. 5+76.43
OFFSET 70.39'
E.O.C. ELEV. 832.35

STA. 5+85.44
OFFSET 67.50'

STA. 6+49.95
OFFSET 65.85'
E.O.C. ELEV. 833.23

STA. 6+10.30
OFFSET 66.73'
E.O.C. ELEV. 831.91

STA. 6+74.00
OFFSET 48.28'
B.O.C. ELEV. 833.11

STA. 8+00.00
OFFSET 0.31'
ASPHALT ELEV. 835.11

STA. 8+50.00
OFFSET 0.31'
ASPHALT ELEV. 834.76

PRC: 7+08.83
N 10204118.17
E 3124515.38

STA. 7+00.00
OFFSET 8.13'
ASPHALT ELEV. 834.05

STA. 6+50.00
OFFSET 11.95'
ASPHALT ELEV. 833.36

PC: 5+69.77
N 10203984.66
E 3124550.69

STA. 5+63.44
OFFSET 48.11'

STA. 5+84.57
OFFSET 47.47'
B.O.C. ELEV. 831.74

STA. 6+09.49
OFFSET 46.68'
B.O.C. ELEV. 832.81

STA. 6+49.35
OFFSET 45.71'
B.O.C. ELEV. 832.70

R25.00' R20.00' R15.00' R50.00'

32.47' 46.03' 25.26' 45.43' 5.10' 20.74' 32.00' 8.74' 138.79' 45.46' 42.59' 19.99' 32.0' 11.41' 5.74' 51.09' 57.66' 44.01' 42.01' 40.84' 41.81' 38.96' 40.09' 37.14' 4.00'

8" W

OHE

SLOPE 2.0%

8+00

7+00

6+00

P:\Georgetown\2004\2004-120\2004-120-24\cad\revisions7-11\PURINA MILLSDRIVE-JDM.dwg

PROPOSED PURINA MILLS PARKING LOT IMPROVEMENTS

STATE OF TEXAS
R. DAVID PATRICK
82738
REGISTERED PROFESSIONAL ENGINEER
2/28/06

C.O. #12

Texas Department of Transportation
Traffic Operations Division

KASBERG, PATRICK & ASSOCIATES, L.L.P.
CONSULTING ENGINEERS
TEMPLE, TEXAS 76501

FED.RD. DIV.NO.	AID PROJECT NO.	SHEET NO.
6	CC-337-1-29	82A

STATE	DIST.	COUNTY	
TEXAS	14	WILLIAMSON	
CONT.	SECT.	JOB	HIGHWAY NO.
337	1	29	CR265 - SH29

2004-120-22

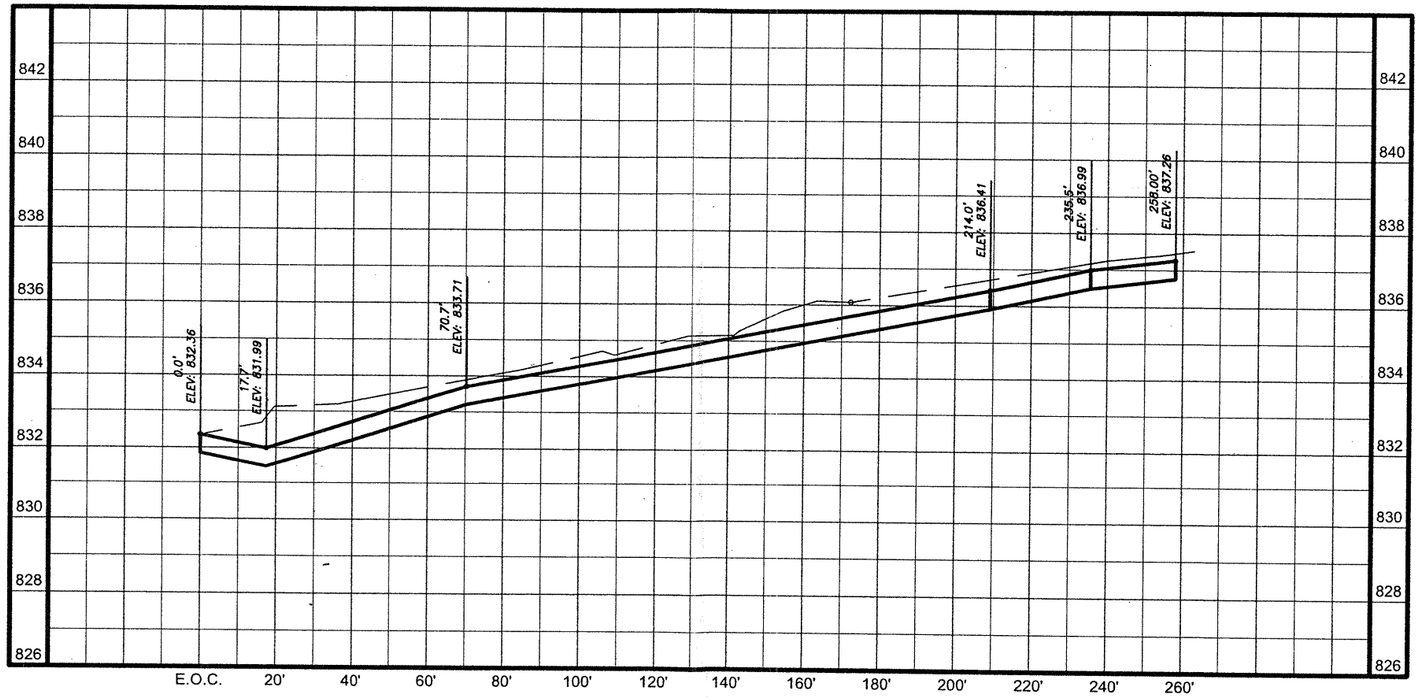

SECTION A-A

STATE OF TEXAS
R. DAVID PATRICK
82738
REGISTERED
PROFESSIONAL ENGINEER

2/28/06

0 20 40
HORIZONTAL SCALE IN FEET

0 2 4
VERTICAL SCALE IN FEET

C.O. #12

Texas Department of Transportation
Traffic Operations Division

KASBERG, PATRICK & ASSOCIATES, L.L.P.
CONSULTING ENGINEERS
TEMPLE, TEXAS 76501

FED.RD. DIV.NO.	AID PROJECT NO.		SHEET NO.
6	CC-337-1-29		82 B
STATE	DIST.	COUNTY	
TEXAS	14	WILLIAMSON	
CONT.	SECT.	JOB	HIGHWAY NO.
337	1	29	CR265 - SH29

P:\Georgetown\2004\2004-120-22\cad\WORKING\PLANS\PP-06.dwg

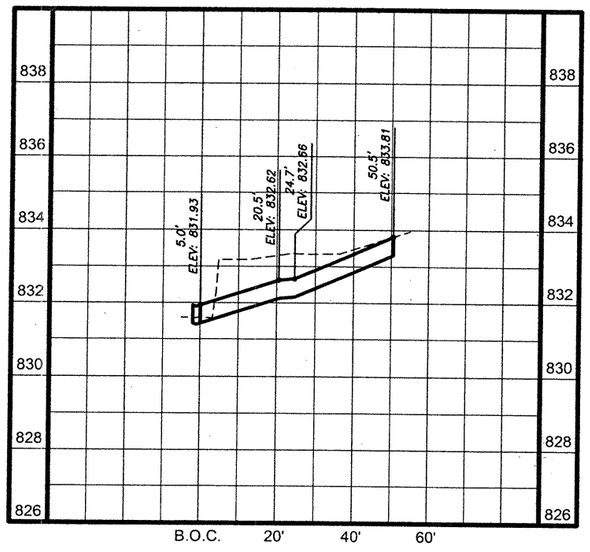

SECTION B-B

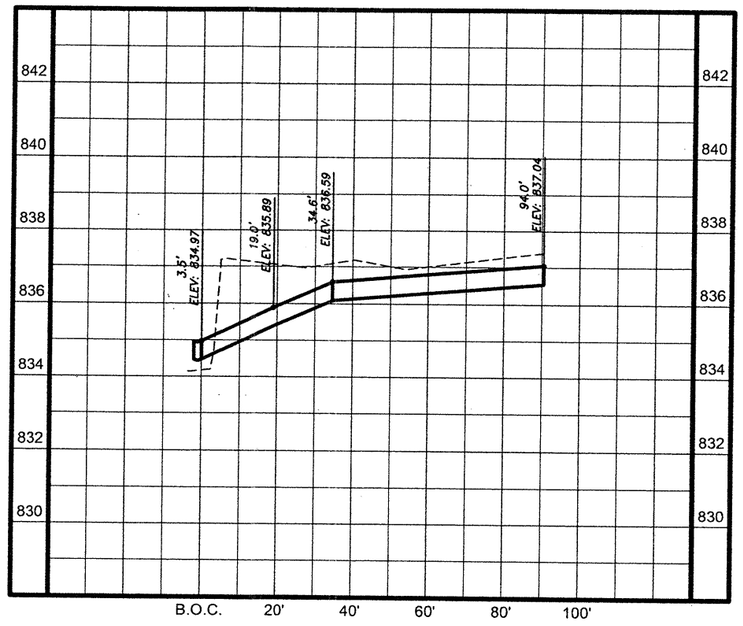

SECTION C-C

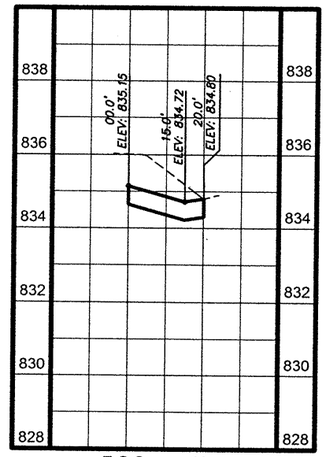

SECTION D-D

STATE OF TEXAS
R. DAVID PATRICK
82738
REGISTERED
PROFESSIONAL ENGINEER

2/28/06

0 20 40
HORIZONTAL
SCALE IN FEET

0 2 4
VERTICAL
SCALE IN FEET

C.O.#12

Texas Department of Transportation
Traffic Operations Division

KASBERG, PATRICK & ASSOCIATES, L.L.P.
CONSULTING ENGINEERS
TEMPLE, TEXAS 76501

FED.RD. DIV.NO.	AID PROJECT NO.		SHEET NO.
6	CC-337-1-29		32 C
STATE	DIST.	COUNTY	
TEXAS	14	WILLIAMSON	
CONT.	SECT.	JOB	HIGHWAY NO.
337	1	29	CR265 - SH29

P:\Georgetown\2004\2004-120-22\cad\WORKING\PLANS\PP-06.dwg

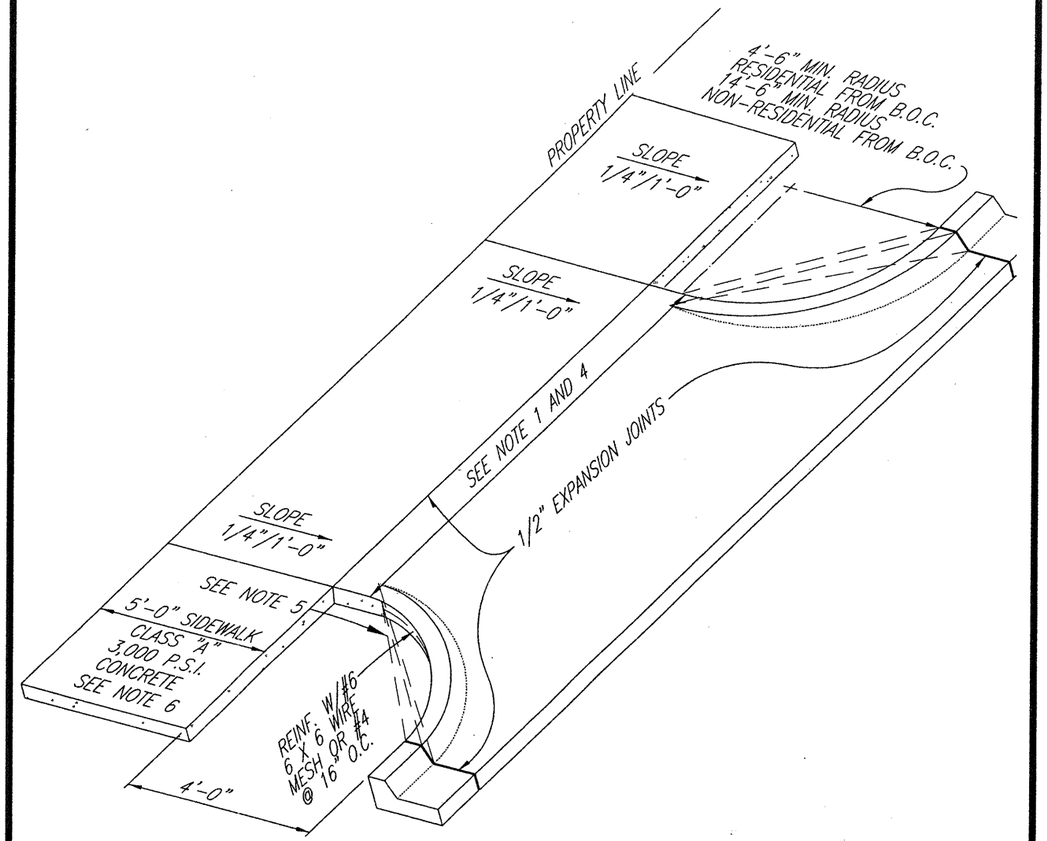

NOTES:

1. MAXIMUM WIDTH OF APPROACH SHALL BE 24'–0" FOR RESIDENTIAL, 30'–0" FOR NON–RESIDENTIAL UNDIVIDED AND 45'–0" FOR NON–RESIDENTIAL DIVIDED.
2. DRIVEWAY PERMITS TO BE ACQUIRED FROM CITY INSPECTION OFFICE.
3. SPACING OF DRIVEWAY CUTS SHALL BE AS REQUIRED BY SECTIONS 33043 – 33044 OF THE CITY'S SUBDIVISION REGULATIONS.
4. MINIMUM WIDTH OF APPROACH SHALL BE 10'–0" FOR RESIDENTIAL AND 15'–0" FOR NON–RESIDENTIAL.
5. LINEAR "RADIUS" AT CORNERS, PERMITTED FOR "SINGLE FAMILY" OR "TWO FAMILY" RESIDENTIAL DRIVEWAY APPROACH.
6. SIDEWALK LOCATION TO BE APPROVED BY CITY ENGINEER PRIOR TO FINAL DESIGN.

ISSUE DATE: JANUARY 2003			CITY OF GEORGETOWN	DWG. #SD–15
REVISIONS				SD16.DWG
			CONCRETE DRIVEWAY APPROACH TYPICAL	
			GEORGETOWN UTILITY SYSTEMS	
DATE	APPROVED	DRAWN	CONSTRUCTION STANDARDS AND DETAILS	
SCALE: N.T.S.				

MISC. DETAILS
NOT TO SCALE

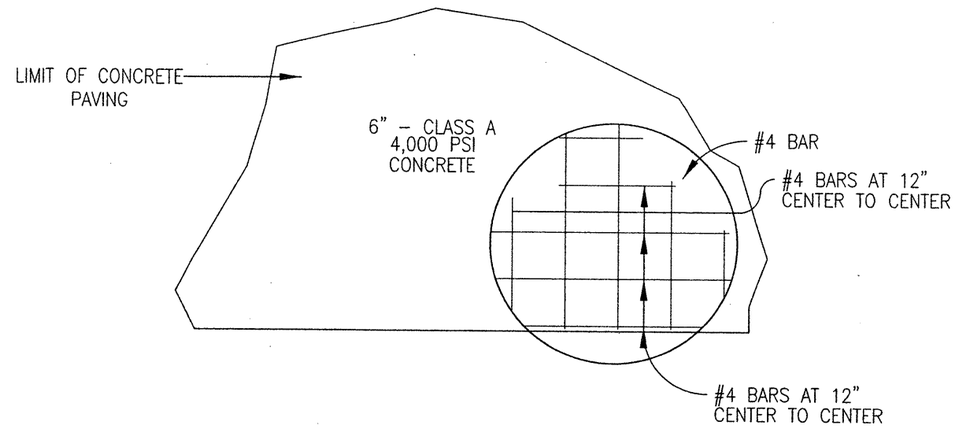

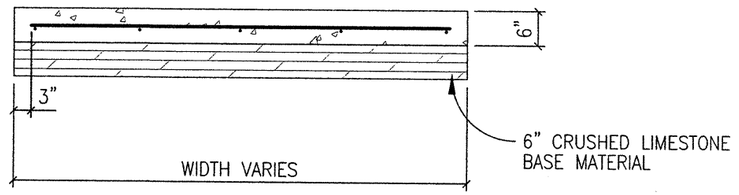

NOTE:

IN THE EVENT THAT LIMESTONE SUBGRADE IS FOUND THE CONTRACTOR MAY ELIMINATE THE 6" OF CRUSHED LIMESTONE BASE MATERIAL.

CONCRETE PAVING DETAIL
NOT TO SCALE

STATE OF TEXAS
R. DAVID PATRICK
82738
REGISTERED
PROFESSIONAL ENGINEER

2/28/06

C.O.#12

Texas Department of Transportation
Traffic Operations Division

KASBERG, PATRICK & ASSOCIATES, L.L.P.
CONSULTING ENGINEERS
TEMPLE, TEXAS 76501

FED.RD. DIV.NO.	AID PROJECT NO.		SHEET NO.
6	CC–337–1–29		32
STATE	DIST.	COUNTY	
TEXAS	14	WILLIAMSON	
CONT.	SECT.	JOB	HIGHWAY NO.
337	1	29	CR265 – SH29

P:\Georgetown\2004\2004-120\2004-120-24\cad\revisions7-11\PURINA D01dwg.dwg

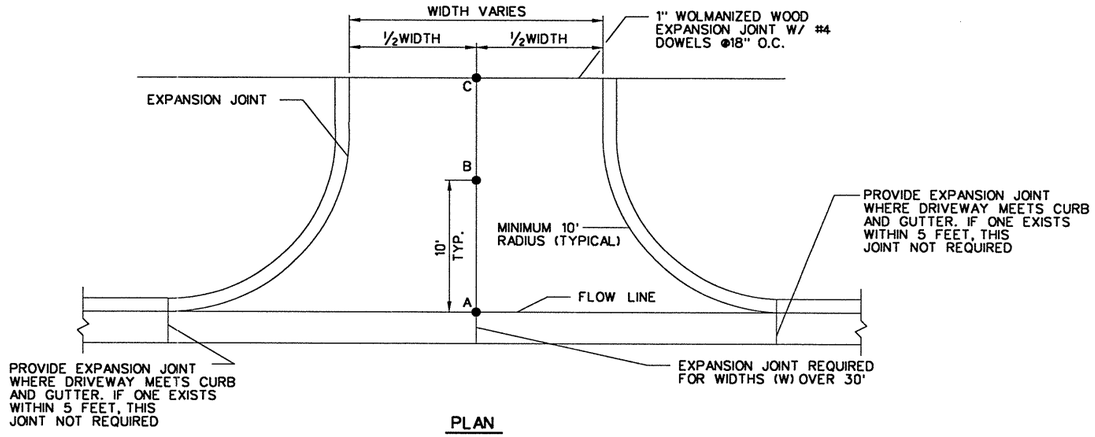

PLAN

SEE CONCRETE DRIVEWAYS STANDARD FOR FURTHER INFORMATION.

ROADWAY	DRWY NO.	STATION	WIDTH	A		B		C		
				OFFSET	ELEV	OFFSET	ELEV	OFFSET	ELEV	
SH 29	1	141+05.00	37.00	34.50	834.88	44.50	835.23	50.00	833.87	
SH 29	2	143+50.00	30.00	-34.50	826.07	-55.00	827.63	-70.00	826.79	
SH 29	3	143+50.00	30.00	34.50	826.07	44.50	826.27	60.00	821.26	
SH 29	4	150+25.50	16.00	-43.50	834.15	-53.50	834.35	-61.00	834.85	
SH 29	5	150+25.50	30.00	43.50	834.15	53.50	834.35	69.00	831.10	
SH 29	6	155+50.00	30.00	-43.50	830.52	-53.50	830.95	-61.00	831.27	
SH 29	7	156+45.50	30.00	55.50	829.46	65.50	829.66	79.00	828.57	
SH 29	8	164+65.25	30.00	-43.50	822.10	-53.50	822.93	-76.00	823.38	
SH 29	9	165+58.25	20.00	-43.50	821.05	-53.50	821.71	-61.00	821.86	
SH 29	10	166+77.32	10.00	-43.50	819.86	-	-	-	-	*
SH 29	11	168+90.69	10.00	-43.50	817.73	-	-	-	-	*
SH 29	12	169+97.50	33.00	-43.50	816.66	-	-	-	-	*
SH 29	13	172+61.00	27.00	-43.50	814.08	-53.50	815.38	-61.00	815.53	
SH 29	14	174+06.77	65.76	42.00	812.81	-	-	-	-	*
SH 29	15	179+67.50	27.00	-55.50	805.29	-65.50	805.77	-76.00	806.27	
SH 29	16	181+96.00	20.00	53.87	800.28	63.87	800.48	77.37	800.29	
CR 265W	17	6+66.50	27.00	64.00	815.81	73.05	815.99	-	-	*
CR 265W	18	13+30.13	40.00	-51.26	832.54	-	-	-	-	*
CR 265W	19	13+28.00	35.00	33.00	832.87	43.03	833.07	53.02	832.90	
CR 265W	20	15+14.00	33.00	-25.50	835.72	-35.50	836.46	-44.00	837.10	
CR 265W	21	15+67.00	27.00	25.50	836.06	35.50	836.25	47.09	836.46	
CR 265E	22	13+15.59	27.00	-29.50	815.17	-39.50	815.88	-55.82	817.03	
CR 265E	23	13+15.59	27.00	29.50	815.17	39.50	815.50	49.50	815.82	

* SEE DRIVEWAY DETAILS BELOW AND ON SHEET 2 FOR FURTHER INFORMATION.

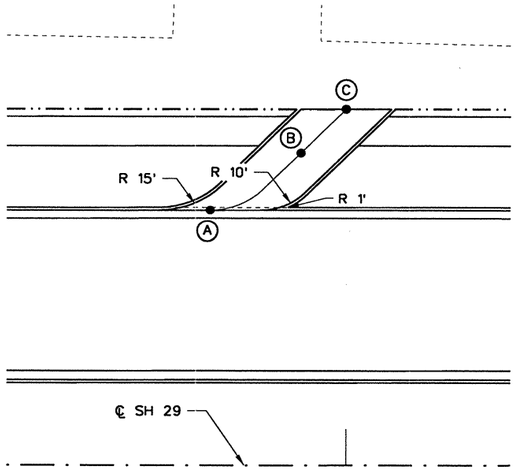

PT	PT DESCRIP	STA.	OFFSET (FT)	ELEV (FT)
Ⓐ	GL	166+77.32	-43.50	819.86
Ⓑ	℄	166+92.50	-53.50	821.05
Ⓒ	ME	167+00.00	-61.00	821.11

DRIVEWAY 10

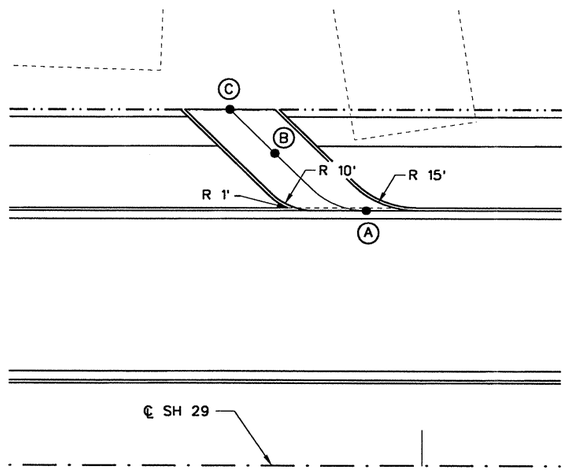

PT	PT DESCRIP	STA.	OFFSET (FT)	ELEV (FT)
Ⓐ	GL	168+90.69	-43.50	817.73
Ⓑ	℄	168+75.52	-53.50	819.40
Ⓒ	ME	168+68.00	-61.00	819.51

DRIVEWAY 11

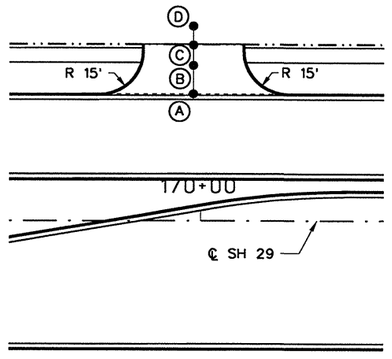

PT	PT DESCRIP	STA.	OFFSET (FT)	ELEV (FT)
Ⓐ	GL	169+97.50	-43.50	816.66
Ⓑ	℄	169+97.50	-53.74	817.89
Ⓒ	℄	169+97.50	-60.74	818.03
Ⓓ	ME	169+97.50	-71.85	819.35

DRIVEWAY 12

NOTES:

1. OFFSETS SHOWN AS POSITIVE ARE TO THE RIGHT OF BASELINE. OFFSETS SHOWN AS NEGATIVE ARE TO THE LEFT OF THE BASELINE.

2. REFER TO THE ROADWAY PLAN AND PROFILE SHEETS FOR ADDITIONAL INFORMATION.

3. POINT DESCRIPTIONS ARE DEFINED AS FOLLOWS:
   ℄ - CENTERLINE
   GL - GUTTER LINE
   PC - POINT OF CURVATURE
   PT - POINT OF TANGENCY
   ME - MATCH EXISTING

STATE OF TEXAS
JAMES J. ROOHMS
83383
LICENSED
PROFESSIONAL ENGINEER
4/22/2004

NO.	REVISION	BY	DATE

CP&Y Chiang, Patel & Yerby, Inc.

© 2004

Texas Department of Transportation

SH 29

DRIVEWAY DETAILS

		FED. ROAD DIV. NO.	STATE	FEDERAL AID PROJECT NO.				SHEET NO.
Designed:	AJW	6	TEXAS	CC 337-1-29				82
Checked:	DHS	STATE DIST. NO.	COUNTY	CONTROL NO.	SECTION NO.	JOB NO.	HIGHWAY NO.	
Drawn:	DHS	14	WILLIAMSON	0337	01	029	SH 29	
Checked:	PAS							

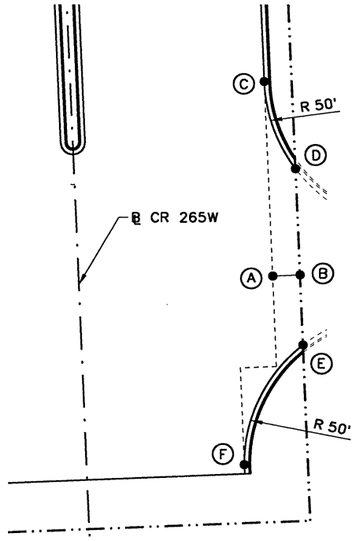

PT	PT DESCRIP	STA.	OFFSET (FT)	ELEV (FT)
A	GL	6+73.65	64.00	815.81
B	ME	6+73.65	73.05	815.99
C	PT	7+32.34	64.00	818.30
D	PC	7+02.29	73.05	817.34
E	PC	6+43.03	73.05	815.09
F	PT	6+03.09	52.00	813.39

DRIVEWAY 17

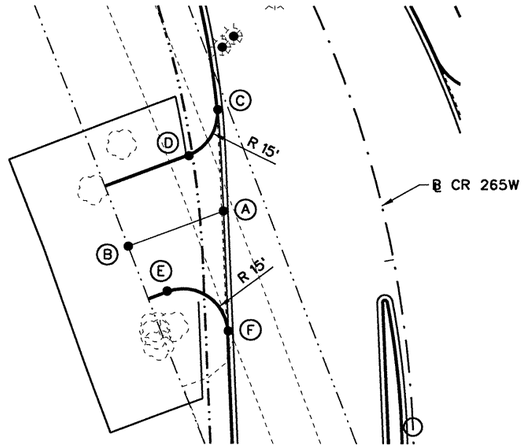

PT	PT DESCRIP	STA.	OFFSET (FT)	ELEV (FT)
A	GL	13+30.13	-51.26	832.54
B	ME	13+25.73	-84.69	833.56
C	PT	13+67.58	-42.71	833.33
D	PC	13+54.58	-56.88	833.80
E	PC	13+04.00	-75.47	832.88
F	PT	12+84.05	-57.70	831.67

DRIVEWAY 18

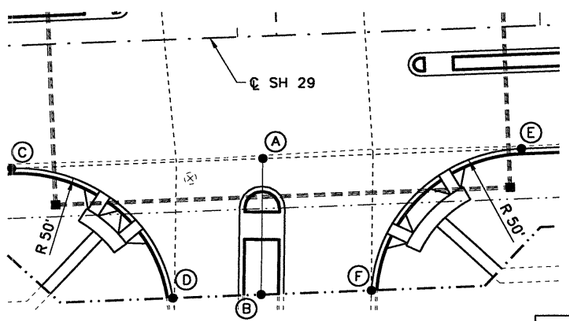

PT	PT DESCRIP	STA.	OFFSET (FT)	ELEV (FT)
A	GL	174+06.77	42.00	812.81
B	ME	174+04.35	88.29	812.12
C	PC	173+23.93	42.00	813.58
D	PT	173+75.17	88.30	811.92
E	PT	174+92.16	42.00	811.91
F	PC	174+40.92	88.27	811.27

DRIVEWAY 14

SEE INTERSECTION LAYOUTS FOR FURTHER INFORMATION

NOTES:

1. OFFSETS SHOWN AS POSITIVE ARE TO THE RIGHT OF BASELINE. OFFSETS SHOWN AS NEGATIVE ARE TO THE LEFT OF THE BASELINE.

2. REFER TO THE ROADWAY PLAN AND PROFILE SHEETS FOR ADDITIONAL INFORMATION.

3. POINT DESCRIPTIONS ARE DEFINED AS FOLLOWS:
   ℄ - CENTERLINE
   GL - GUTTER LINE
   PC - POINT OF CURVATURE
   PT - POINT OF TANGENCY
   ME - MATCH EXISTING

STATE OF TEXAS
JAMES J. ROOHMS
83383
LICENSED
PROFESSIONAL ENGINEER
9/22/2004

NO.	REVISION	BY	DATE

CP&Y Chiang, Patel & Yerby, Inc.

© 2004

Texas Department of Transportation

SH 29

DRIVEWAY DETAILS

		FED. ROAD DIV. NO.	STATE	FEDERAL AID PROJECT NO.			SHEET NO.
Designed:	AJW	6	TEXAS	CC 337-1-29			84
Checked:	DHS	STATE DIST. NO.	COUNTY	CONTROL NO.	SECTION NO.	JOB NO.	HIGHWAY NO.
Drawn:	DHS	14	WILLIAMSON	0337	01	029	SH 29
Checked:	PAS						

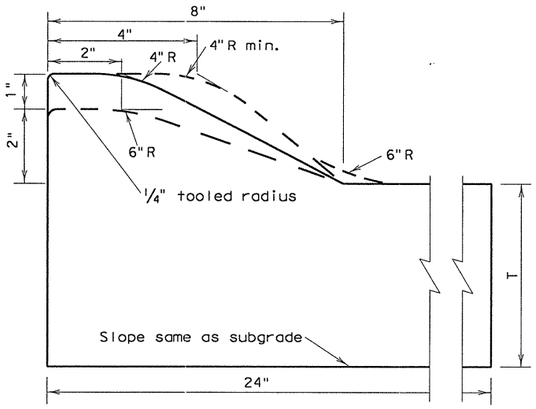

TYPE I CURB AND GUTTER

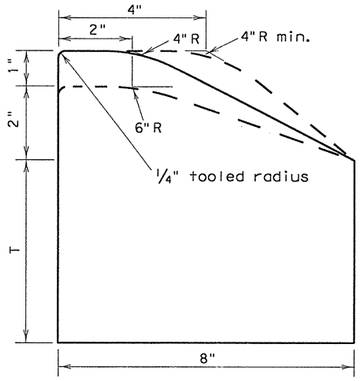

TYPE I CURB

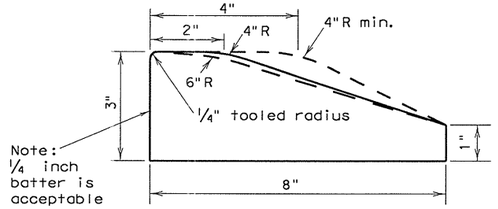

TYPE I MONO CURB OR
CURB PLACED ON PAVEMENT

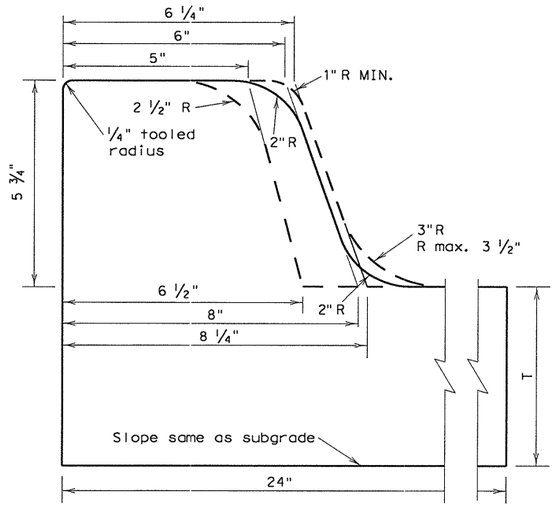

TYPE II CURB AND GUTTER

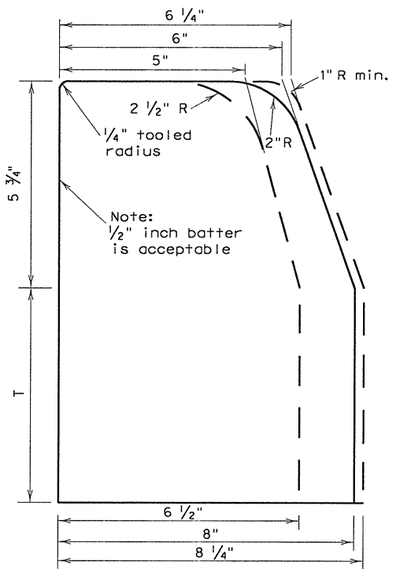

TYPE II CURB

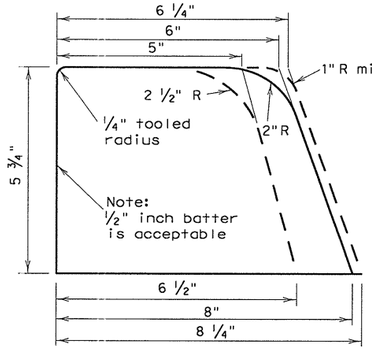

TYPE II MONO CURB OR
CURB PLACED ON PAVEMENT

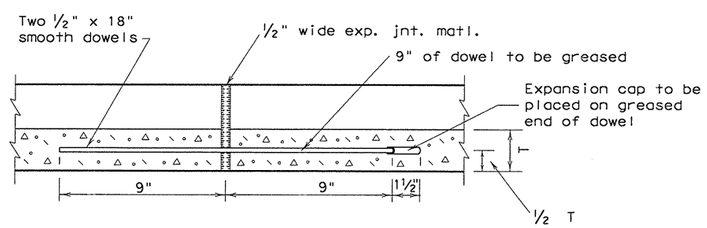

Longitudinal section thru curb and gutter showing typical expansion joint details.

Reinforcing steel (when used) shall not cross expansion joints. Steel shall be terminated 3" ± 1" from face of the joint.

GENERAL NOTES

1. Contractor may use existing forms if the cross section lies within the band shown by dotted lines. If new forms are to be purchased, leased, or constructed they shall conform to the solid line.
2. When reinforcing steel is required or placed at contractor's option, one of the following schemes of reinforcement shall be required. The manner of placement and location shall be to the satisfaction of the Engineer.
   a. Type I, or Type II, curb and gutter reinforcement shall have longitudinal reinforcing bars as follows: Three #3, two #4, two #5, or one #6.
   b. All types of curb (reinf.) shall have one #3 or #4 bar for for longitudinal reinforcement.
3. Reinforcing bars shall be lapped a minimum of 15".
4. When curb or curb and gutter is placed by a separate pour adjacent to or atop concrete pavement, curb or curb and gutter shall be tied to pavement in a manner satisfactory to the engineer with 8-inch long #3 or #4 bars spaced at 5 feet and expansion and/or contraction joints of curb or curb and gutter shall match those of pavement.

   When curb and curb and gutter is not constructed adjacent to concrete pavement, the following shall govern:
   a. Reinforced curb or curb and gutter shall have no contraction joints.
   b. Non-reinforced curb or curb and gutter shall have formed, tooled or sawed contraction joints at 10'±. The depth of these joints shall be sufficient to ensure cracking at the joints.
   c. Reinforcing curb or curb and gutter shall have expansion joints at points of curvature and at intervals no greater than 120' in all curves and at structures such as bridges, box culverts, curb inlets, etc.
   d. Non-reinforced curb or curb and gutter shall have expansion joints at points of curvature on curves of radius less than 25' and at structures such as bridges, box culverts, curb inlets, etc.
5. One-half inch expansion joint material shall be provided where curb or curb gutter is adjacent to sidewalk or riprap.
6. Unless otherwise shown, transitions between curbs or curbs and gutters of differing cross section shall be accomplished over a 20 foot length or as approved by the Engineer.
7. At contractor's option, dimension "T" may be thickness of pavement structure. In no case shall it be less than 6".
8. See the RAMP standard sheet for information on curb ramps and sidewalks crossing driveways.

Texas Department of Transportation
Design Division (Roadway)

CONCRETE CURB AND CURB AND GUTTER

CCCG-01

FILE: cccg01.DGN	DN: MAM	CK: RAR	DW: RAR	CK: MAM	NEG:	
©TxDOT 1995	DIST	FED REG	FEDERAL AID PROJECT #			SHEET
REVISIONS	AUS	6	CC 337-1-29			85
	COUNTY		CONTROL	SECT	JOB	HIGHWAY
	WILLIAMSON		0337	01	029	SH 29

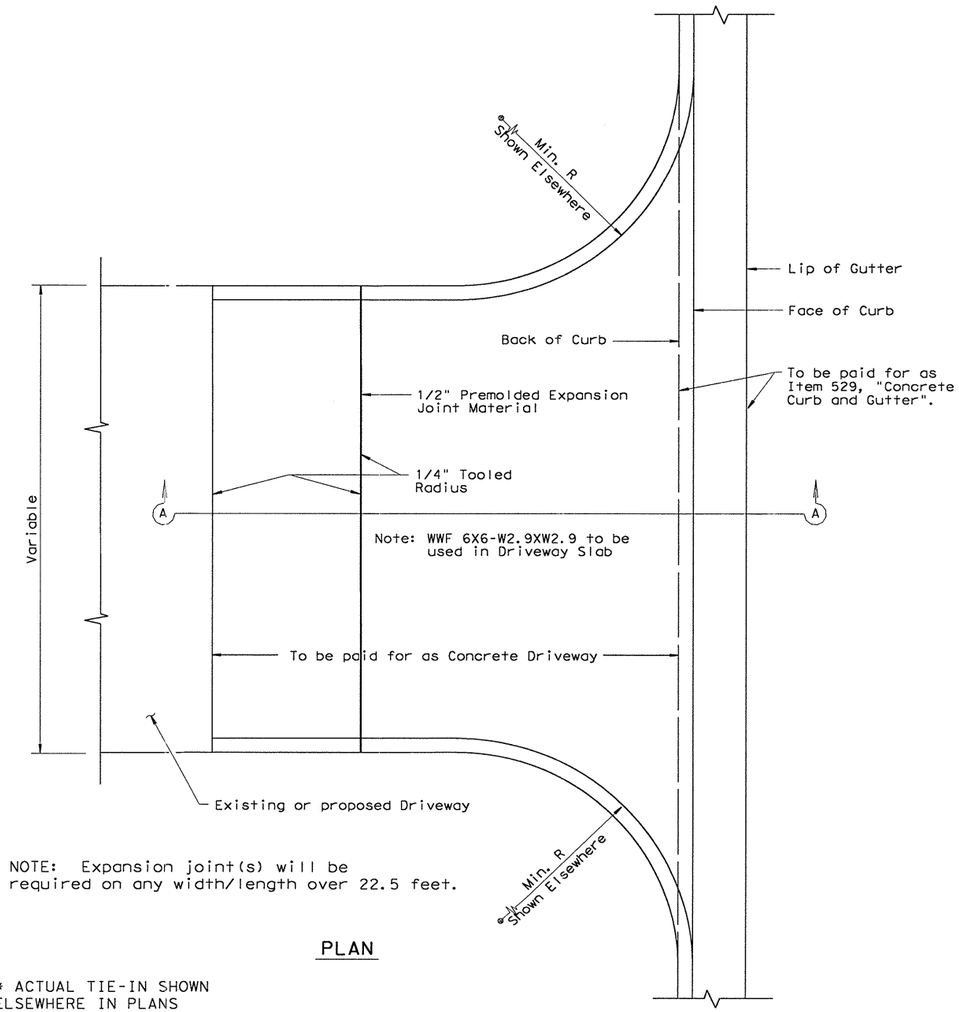

NOTE: Expansion joint(s) will be required on any width/length over 22.5 feet.

PLAN

* ACTUAL TIE-IN SHOWN ELSEWHERE IN PLANS OR AS DIRECTED BY THE ENGINEER.

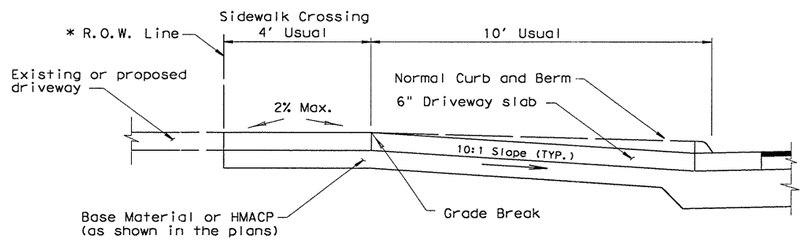

SECTION A-A

CONCRETE DRIVEWAY DETAILS

Payment for Driveways shall be in accordance with Item 530, "Driveways".

Grade break shall not exceed 8% unless otherwise directed by the Engineer.

Absolute minimum sidewalk crossing width is 3' for driveway width of 20' or less.

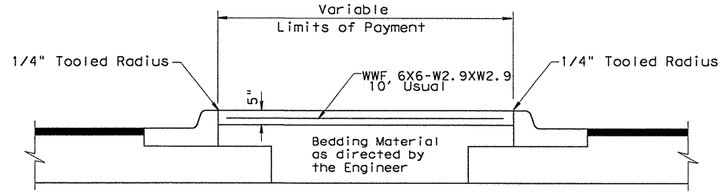

RIPRAP MEDIAN DETAIL

Riprap shall be Class B Concrete.

Payment of Riprap Median shall be in accordance with Item 432, "Riprap".

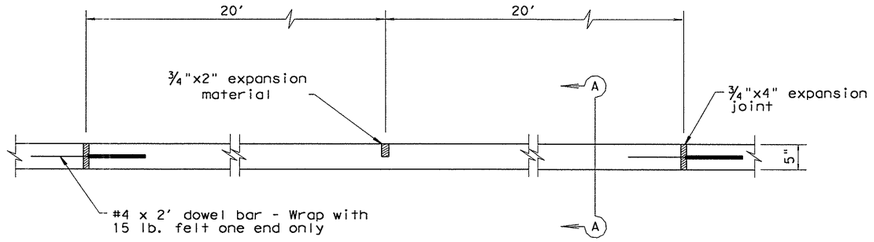

ELEVATION

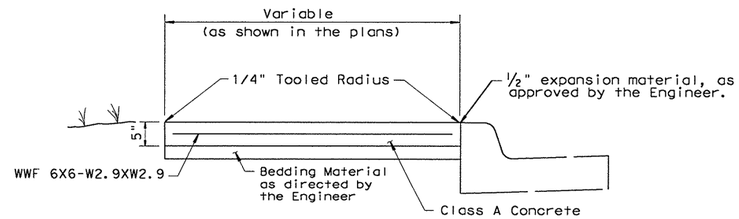

SECTION A-A

SIDEWALK DETAILS

A 3/4" expansion joint will be placed each 40' (max.) and at sidewalk ends.

Expansion joints shall be continuous with adjacent curb and gutter joints.

A 1/4" tooled radius to be placed at all joints.

The cross slope of the sidewalk shall not exceed 2%.

Payment for sidewalk shall be in accordance with Item 531, "Sidewalks".

See Statewide PED standard for additional pedestrian element criteria.

Texas Department of Transportation
Austin District Design

CONCRETE DRIVEWAYS, SIDEWALKS AND RIPRAP MEDIANS

AUSTIN DISTRICT STANDARD

© TxDOT 2002

REVISIONS
4/03 District Update
RIPRAP MEDIANSWAYS, **
RIPRAP MEDIANSWAYS, **

DIST	FED REG	FEDERAL AID PROJECT #			SHEET
AUS	6	CC 337-1-29			86
COUNTY		CONTROL	JOB		HIGHWAY
WILLIAMSON		0337	01	029	SH 29

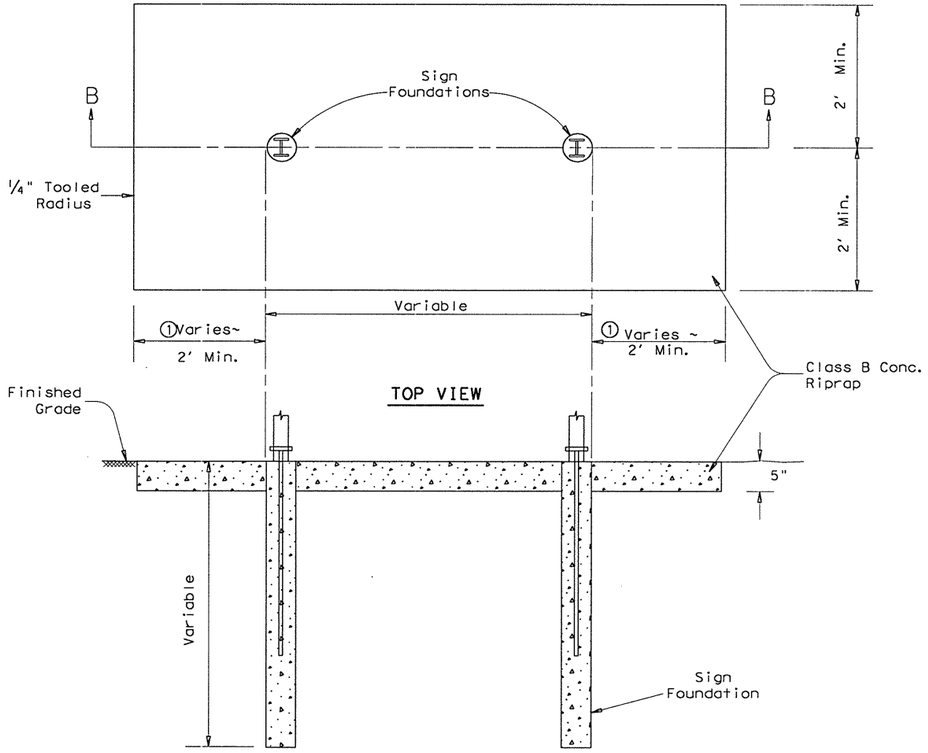

SECTION B-B

LARGE GROUND MOUNTED GUIDE SIGNS OR OVERHEAD SIGN BRIDGES

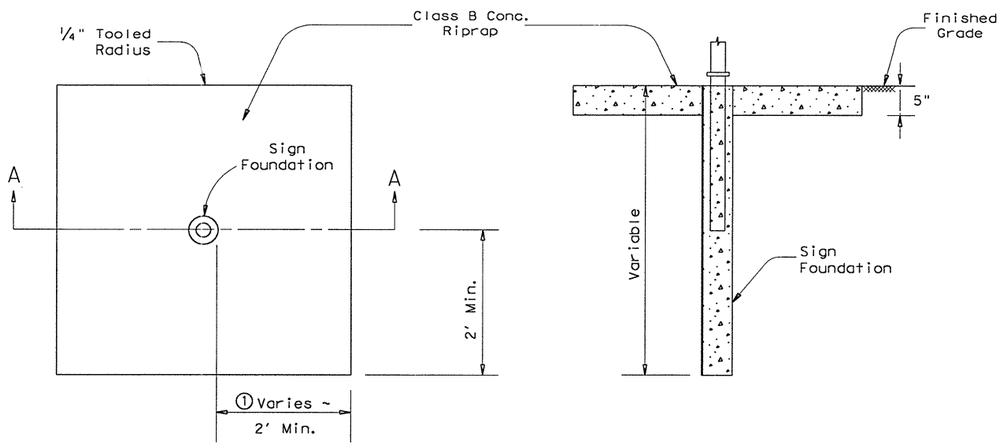

CANTILEVER SIGNS

Detail shall be used on small roadside signs only when shown elsewhere in the plans or as directed by the Engineer.

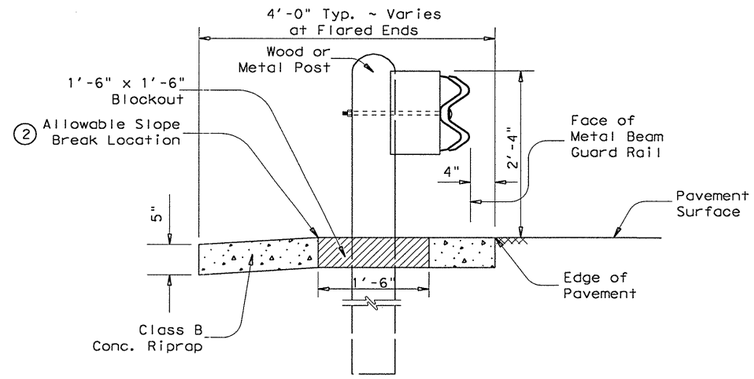

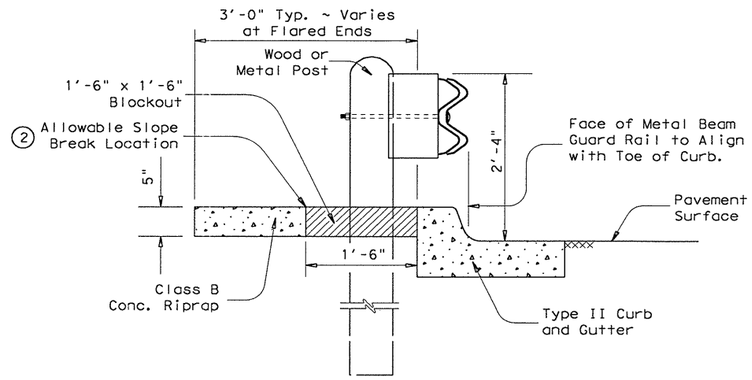

METAL BEAM GUARD FENCE

1'-6" x 1'-6" Blockout to be filled with 2 sack Grout after Riprap has been placed. This shall be subsidiary to Item 432, "Riprap".

① For large Ground Mounted Guide Signs, the Riprap should extend to the outside lateral edges of the signs. However, in those instances where the edge of the sign does not extend 2'-0" from the post, a 2'-0" minimum dimension will be utilized.

① For Overhead Sign Bridges and Cantilever Sign Mounts the dimensions shall be measured from outside edge of Drill Shafts.

② For rehabilitation type projects that do not involve reworking the front slope behind the Metal Beam Guard Fence, a break in the slope is allowed as shown or as approved by the Engineer but shall be 4:1 or flatter. For all other projects, the Riprap Mow Strip shall be placed at 10:1 or flatter or as approved by the Engineer. Unless paid for under separate bid items, earthwork required to adjust the slope as shown or as directed by the Engineer shall be considered subsidiary to Item 432, "Riprap".

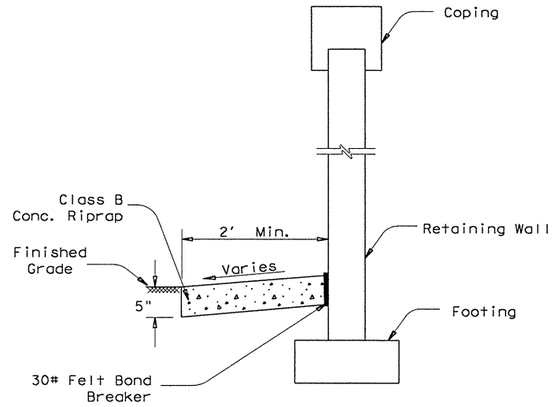

RETAINING WALL

GENERAL NOTES:

This treatment shall be provided for Signs, Metal Beam Guard Fence and Retaining Walls that require vegetation control as shown in the plans or as directed by the Engineer.

Payment for Riprap shall be in accordance with Item 432, "Riprap". Reinforcement for Riprap shall be WWF 6X6-W2.9XW2.9.

Care should be taken to ensure that the finished grade of Riprap matches finished grade of adjacent topsoil.

Riprap depth shall be 5" unless otherwise shown in the plans.

The thickness of the Concrete Riprap shall not be applied to the sign Drilled Shaft foundation resulting in the shortening of the required Drilled Shaft length.

Unless otherwise shown, the Metal Beam Guard Fence posts shall be centered in the 1'-6"X1'-6" Blockout for Grout.

Texas Department of Transportation
Austin District Design

CONCRETE RIPRAP FOR VEGETATION CONTROL

Austin District Standard

© TxDOT 2003

REVISIONS
3/03 District Update

DIST	FED REG	FEDERAL AID PROJECT #			SHEET
AUS	6	CC 337-1-29			87
COUNTY		CONTROL	SECT	JOB	HIGHWAY
WILLIAMSON		0337	01	029	SH 29

...\paving\vc-03.dgn 09/21/2004 01:47:46 PM

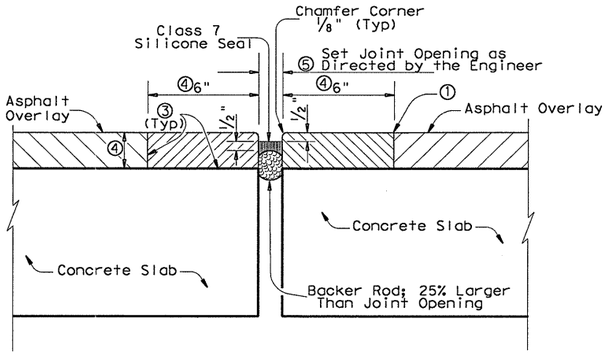

SECTION AT NEW SLAB WIDENING

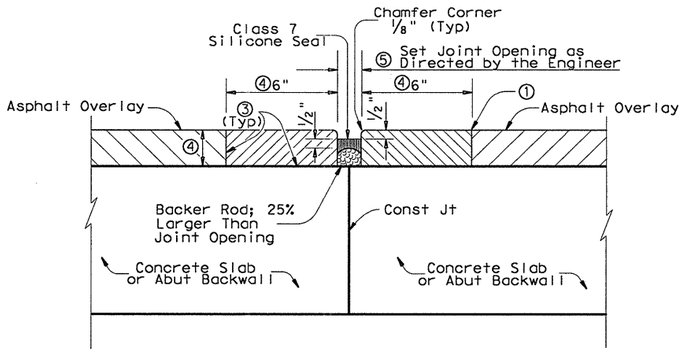

SECTION AT NEW SLAB WIDENING

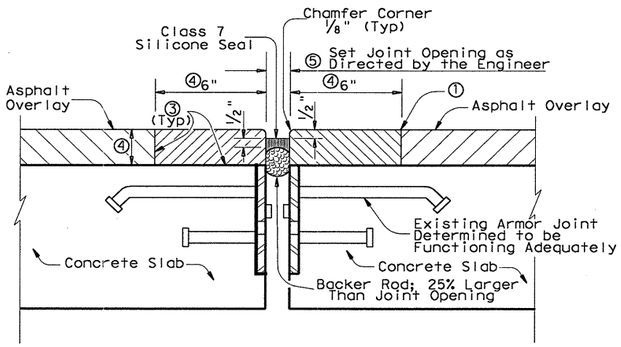

SECTION AT EXISTING ARMOR JOINT

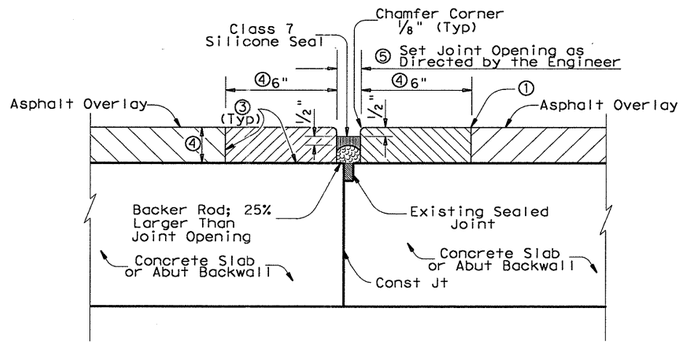

SECTION AT EXISTING SEALED JOINT

TYPE A HEADER JOINT DETAILS

(See Table for Type A Joint Locations)

TYPE B HEADER JOINT DETAILS

(See Table for Type B Joint Locations)

Header Joint Location Table

Structure \ Joint Type	Type "A" Header Jt	Type "B" Header Jt
SH 29 - IH 35 STRUCTURE	2 LOCATIONS - AT ABUTMENTS	3 LOCATIONS - AT INTERIOR BENTS

NOTES:

① Saw cut overlay to top of deck and remove material to expose existing joint.

② Condition of existing Armor Joint shall be determined prior to placing nosing/header material. The entire length of existing joint shall be checked and any portion that is determined unsound by the Engineer shall be removed as directed by the Engineer. The existing seal shall be removed and disposed of. If joint is determined to be loose, removal shall be paid for under "EXTRA WORK AS DIRECTED BY THE ENGINEER".

③ Surfaces where nosing/header material is to be placed shall be clean and dry in accordance with the manufacturer's specifications.

④ The thickness of the header shall match the thickness of the overlay. The thickness of the overlay is approximately 2" but may vary. If the thickness of the overlay exceeds 3", the width of the header shall be set at two times the thickness.

⑤ Joint opening shall match existing for Type "A" Header Joint; Use 1" Joint opening for Type "B" Header Joint.

⑥ Extend sealant up into rail or curb 6 inches on low side or sides of deck. Prepare surfaces where sealant is to be placed in accordance with manufacturers specifications.

HEADER TYPE SEALED JOINT DETAILS

Measurement and Payment shall be in accordance with Special Specification Item 4454, "Header Type Bridge Joint with or without Sealant". Header shall be paid for by cubic foot and sealant shall be paid for by the linear foot.

HS20 LOADING

STATE OF TEXAS
JAMES J. ROOHMS
83383
REGISTERED
PROFESSIONAL ENGINEER
10/20/04

Texas Department of Transportation
Design Division (Bridge)

HEADER TYPE SEALED JOINTS

FILE: 5810md01.dgn	DN: RJC	CK: MNM	DW: TGC	CK: RJC
©TxDOT NOVEMBER, 1999	DIST	FED REG	FEDERAL AID PROJECT #	SHEET
REVISIONS	AUS	6	CC 337-1-29	88
	COUNTY		CONTROL SECT JOB	HIGHWAY
	WILLIAMSON		0337 01 029	SH 29

...\HEADER TYPE SEALED JOINTS.dgn 10/20/2004 8:56:38 AM

TYPE 1

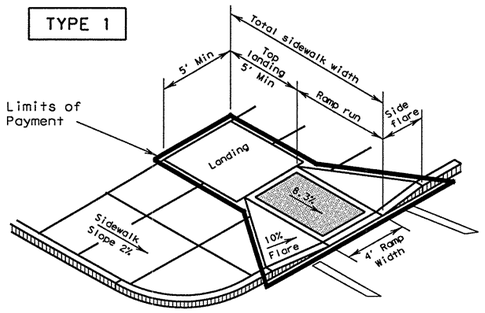

PERPENDICULAR CURB RAMP

TYPE 7

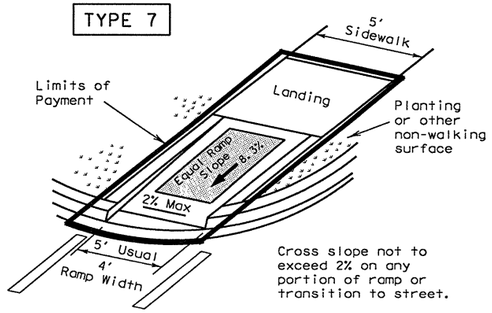

Cross slope not to exceed 2% on any portion of ramp or transition to street.

DIRECTIONAL RAMP WITHIN RADIUS

TYPE 20

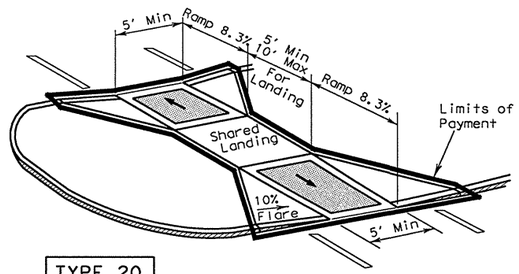

TYPE 21

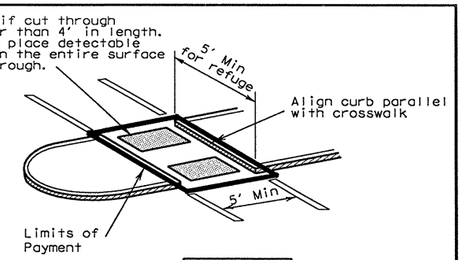

CURB RAMPS AT MEDIAN ISLANDS

TYPE 2

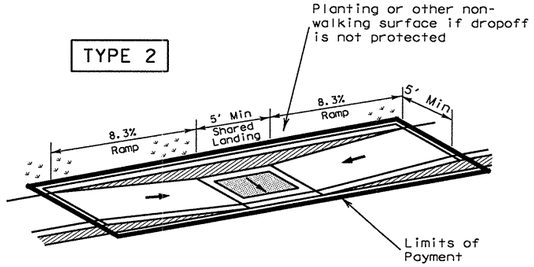

PARALLEL CURB RAMP

TYPE 8

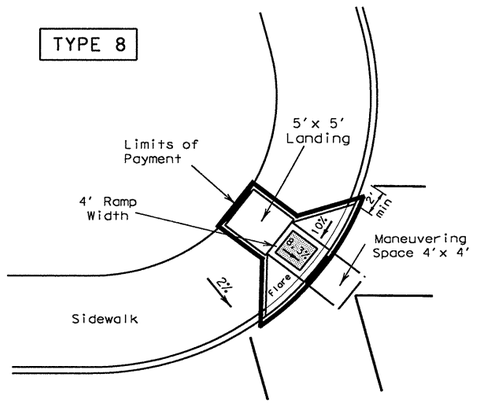

DIAGONAL CURB RAMP (FLARED SIDES)

TYPE 4

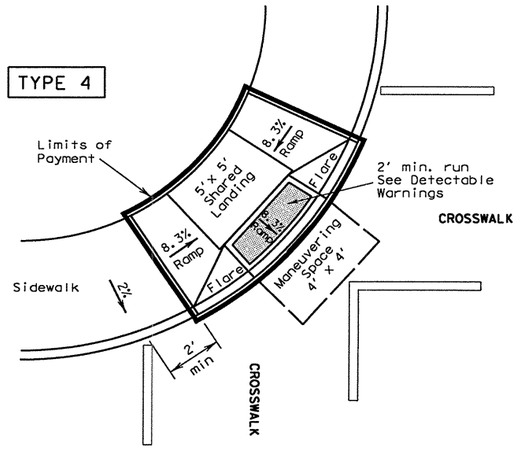

DIAGONAL COMBINATION CURB RAMP

Perpendicular to the Tangent of the Curb Radius and Contained in Crosswalk

TYPE 9

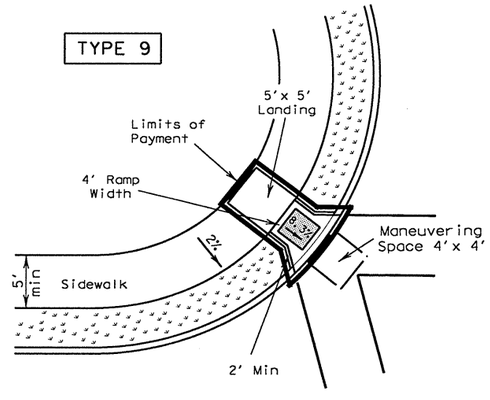

DIAGONAL CURB RAMP (RETURNED CURB)

TYPE 3

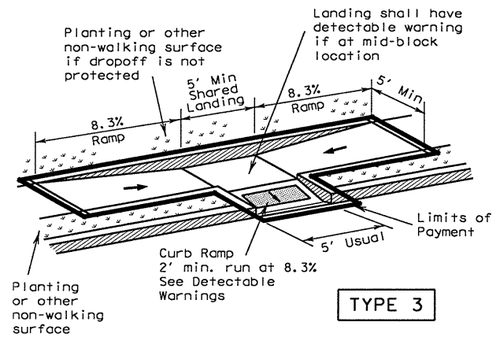

TYPE 6

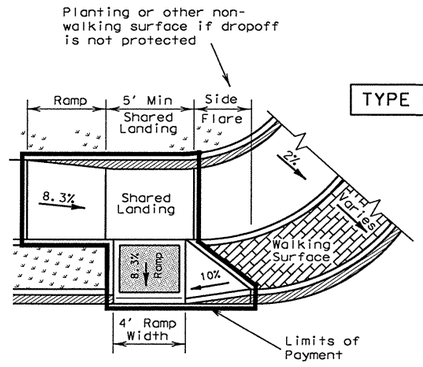

COMBINATION CURB RAMPS

TYPE 22

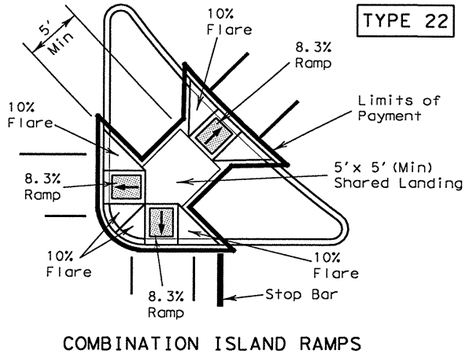

COMBINATION ISLAND RAMPS

General Notes

All slopes are maximum allowable. The least possible slope that will still drain properly should be used. Ramp length or grade of approach sidewalks may be adjusted as directed by the Engineer.

The minimum sidewalk width is 5'. Where a 5' sidewalk can not be provided due to site constraints, a minimum 3' sidewalk with 5'x 5' passing areas at intervals not to exceed 200 ft is required.

Landings shall be 5'x 5' minimum with a maximum 2% slope in any direction.

Maneuvering space at the bottom of curb ramps shall be a minimum of 4'x 4' wholly contained within the crosswalk and wholly outside the parallel vehicular travel path.

Maximum allowable cross slope on sidewalk and ramp surfaces is 2%.

Curb ramps with returned curbs may be used only where pedestrians would not normally walk across the ramp. Otherwise, flared sides shall be provided.

All concrete surfaces shall receive a light broom finish unless noted otherwise in the plans.

Ramp textures must consist of truncated domed surfaces. Textures are required to be detectable underfoot. Surfaces that would allow water to accumulate are prohibited.

Additional information on curb ramp location, design, light reflective value and texture may be found in the current edition of the Texas Accessibility Standards (TAS) prepared and administered by the Texas Department of Licensing and Regulation (TDLR).

Raised medians separate opposing directions of traffic and provide a refuge area for pedestrians unable to cross the entire roadway in the allotted signal phase. To serve as a refuge area, the median should be a minimum of 5' wide. Medians should be designed to provide accessible passage over or through them.

Small channelization islands, which can not provide a minimum 5'x 5' landing at the top of ramps, shall be cut through level with the surface of the street.

Crosswalk dimensions, crosswalk markings and stop bar locations shall be as shown elsewhere in the plans. At intersections where crosswalk markings are not required, ramps shall be aligned with theoretical crosswalks, or as directed by the Engineer.

Existing features that comply with TAS may remain in place unless otherwise shown on the plans.

Handrails are not required on curb ramps. Curb ramps shall be provided wherever on accessible route crosses (penetrates) a curb.

Shaded areas indicate locations of detectable warnings. (Color / light reflective value and texture contrast)

Curb ramps and landings shall be constructed and paid for in accordance with Item, "Curb ramp and Landing". Street curb transitions and curb bevels will be paid for in accordance with Item, "Concrete Curb, Gutter and Combined Curb and Gutter".

Texas Department of Transportation
Design Division (Roadway)

PEDESTRIAN FACILITIES
CURB RAMPS
PED-02

SHEET 1 OF 3

FILE: ped02.dgn	DN: MAM	CK: MAM	DW: BGD	CK:			
© TxDOT March 2002	DIST	FED REG	FEDERAL AID PROJECT #				SHEET
REVISIONS	AUS	6	CC 337-1-29				89
	COUNTY			CONTROL	SECT	JOB	HIGHWAY
	WILLIAMSON			0337	01	029	SH 29

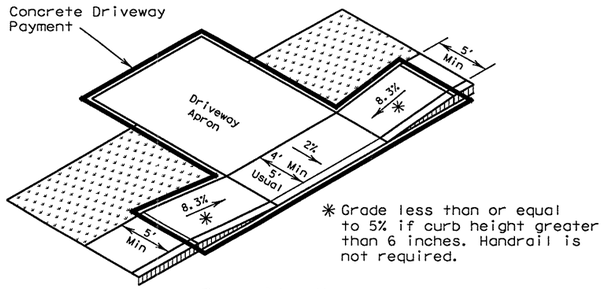

* Grade less than or equal to 5% if curb height greater than 6 inches. Handrail is not required.

Ramp sidewalk

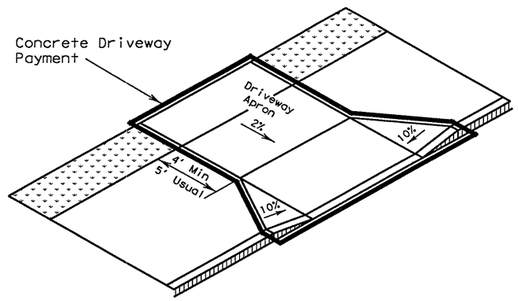

Wide sidewalk

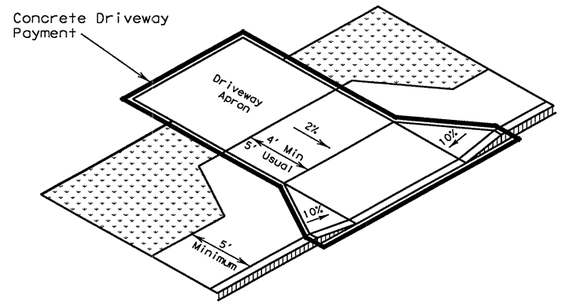

Apron offset sidewalk

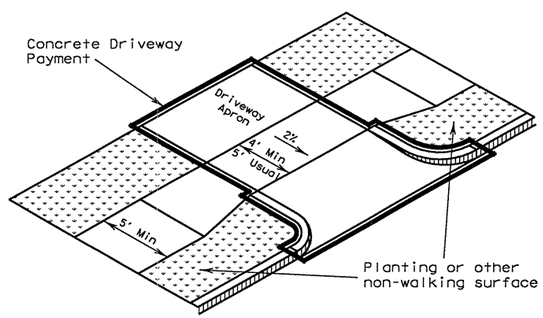

Setback sidewalk

SIDEWALK TREATMENT AT DRIVEWAYS

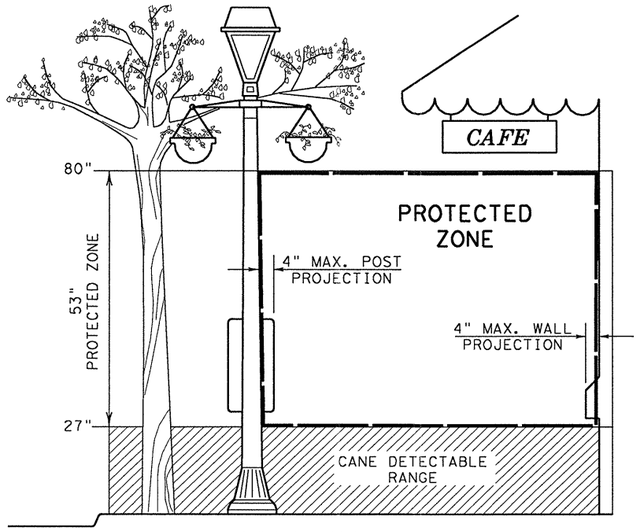

PROTECTED ZONE

In pedestrian circulation area, maximum 4" projection for post or wall mounted objects between 27"and 80" above the surface.

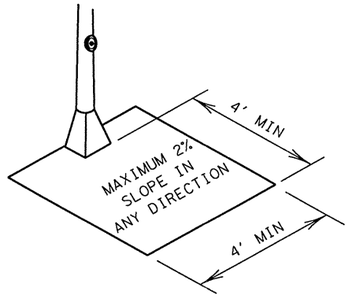

CLEAR GROUND SPACE AT PEDESTRIAN PUSH BUTTON

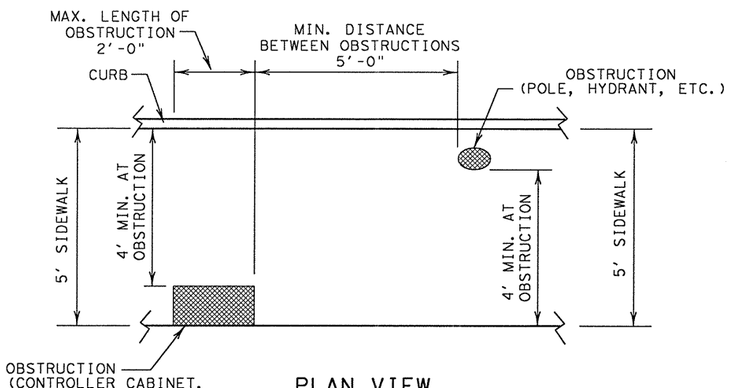

PLAN VIEW

PLACEMENT OF STREET FIXTURES

(ITEMS NOT INTENDED FOR PUBLIC USE. MINIMUM 4' x 4' CLEAR GROUND SPACE REQUIRED AT PUBLIC USE FIXTURES.)

General Notes

All slopes are maximum allowable. The least possible slope that will still drain properly should be used.

Traffic signal or illumination poles, ground boxes, controller boxes, signs, drainage facilities and other items shall be placed so not to obstruct the accessible route.

Usual sidewalk cross slope equals 1.5%. The maximum allowable sidewalk cross slope equals 2%.

Street grades and cross slopes shall be as shown elsewhere in the plans.

Existing features that comply with TAS may remain in place unless otherwise shown on the plans.

Changes in level greater than ¼ inch are not permitted.

Any part of the accessible route with a slope greater than 1:20 (5%) shall be considered a ramp. If a ramp has a rise greater than 6 inches or a horizontal projection greater than 72 inches, then it shall have handrails on both sides, with the following exceptions:

At ramp sidewalks shown at far left.

Handrails are not required on curb ramps. Curb ramps shall be provided wherever an accessible route crosses (penetrates) a curb.

The least possible grade should be used to maximize accessibility. Where structurally impractical to achieve TAS compliance, the running slope of sidewalks and crosswalks, within the public right of way, may follow the grade of the parallel roadway without invoking Texas Accessibility Standards (TAS) variances for landings or handrails. Where a continuous grade greater than 5% must be provided, handrails may be desirable on one or both sides of the sidewalk to improve accessibility. Handrails may also be needed to protect pedestrians from potentially hazardous conditions.

Parabolic crowns may require adjustment in crosswalk areas to limit the crosswalk grade to 5%.

Driveways and turnouts shall be constructed and paid for in accordance with Item, "Driveways and Turnouts". Sidewalks shall be constructed and paid for in accordance with Item, "Sidewalks".

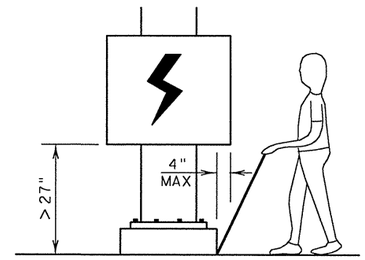

When an obstruction of a height greater than 27" from the surface would create a protrusion of more than 4" into the pedestrian circulation area, construct additional curb or foundation at the bottom to provide a maximum 4" overhang.

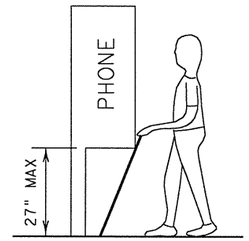

Protruding objects of a height ≤ 27" are detectable by cane and do not require additional treatment.

DETECTION BARRIER FOR VERTICAL CLEARANCE < 80"

Texas Department of Transportation
Design Division (Roadway)

PEDESTRIAN FACILITIES
SIDEWALKS

PED-02

SHEET 2 OF 3

FILE: ped02.dgn	DN: MAM	CK: MAM	DW: BGD	CK:			
© TxDOT March 2002	DIST	FED REG	FEDERAL AID PROJECT #				SHEET
REVISIONS	AUS	6	CC 337-1-29				90
	COUNTY			CONTROL	SECT	JOB	HIGHWAY
	WILLIAMSON			0337	01	029	SH 29

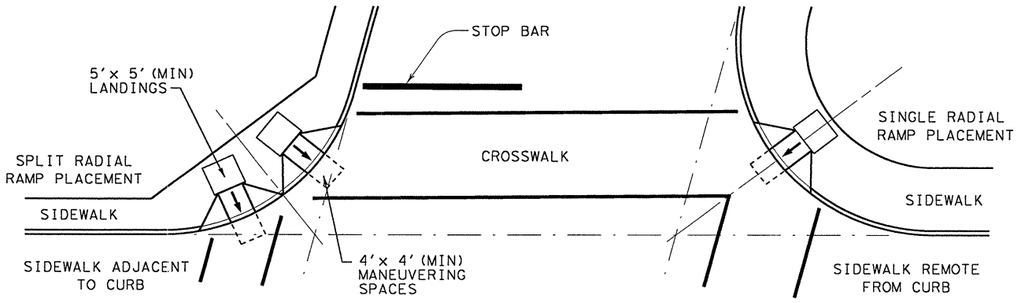

SKEWED INTERSECTION WITH "LARGE" RADIUS

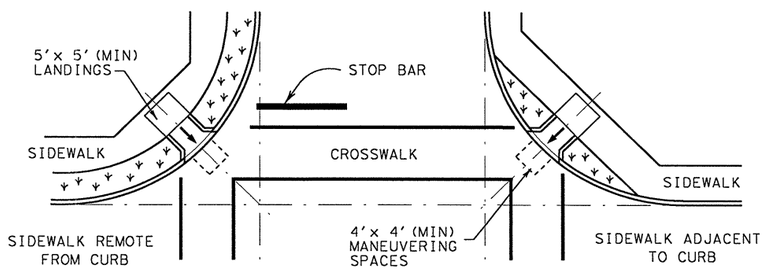

NORMAL INTERSECTION WITH "LARGE" RADIUS

General Notes

Street grades and cross slopes shall be as shown elsewhere in the plans.

Ramps are shown here without detectable warnings for simplicity. Detectable warnings are required at the locations shown on the PED Standard (Sheet 1 of 3) and in accordance with the details shown below.

Small channelization islands, which can not provide a minimum 5' x 5' landing at the top of ramps, shall be cut through level with the surface of the street.

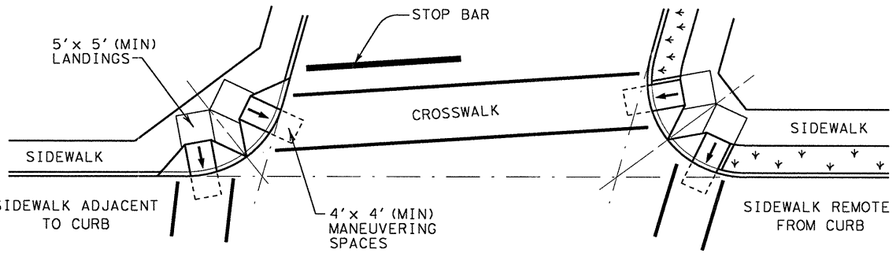

SKEWED INTERSECTION WITH "SMALL" RADIUS

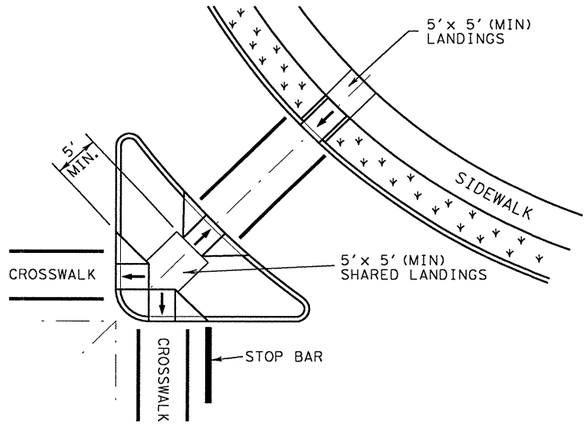

AT INTERSECTION
W/FREE RIGHT TURN & ISLAND

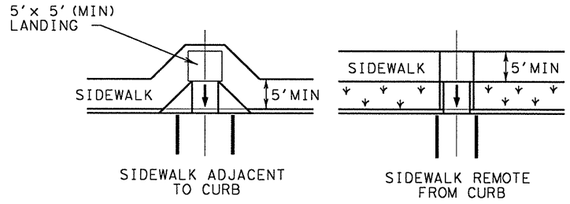

MID-BLOCK PLACEMENT
PERPENDICULAR RAMPS

NORMAL INTERSECTION WITH "SMALL" RADIUS

TYPICAL CROSSING LAYOUTS

SEE SHEET 1 OF 3 FOR DETAILS AND DIMENSIONS

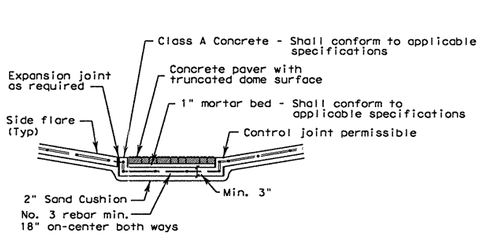

Section A-A

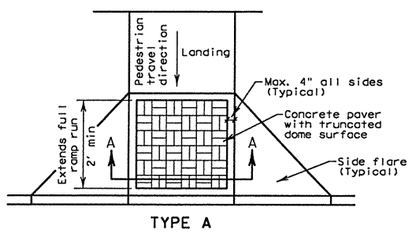

TYPE A
Truncated Dome Pattern Curb Ramp

DETECTABLE WARNINGS

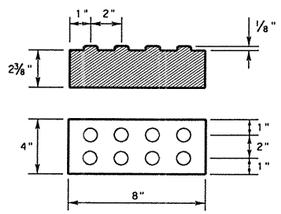

Concrete paver with truncated dome surface

General Notes

Concrete paver units shall meet all requirements of ASTM C-936, C-33, and shall be laid in a two by two unit basket weave pattern, unless shown otherwise in the plans.

Domes shall be aligned in the direction of pedestrian travel.

Concrete paver units shall have a truncated dome top surface for detectable warning to pedestrians.

Concrete paver unit color for the ramp shall be a contrasting color that provides a light reflective value that significantly contrasts with the adjacent surfaces. The color of the concrete paver units shall be shown elsewhere in the plans. (Adjacent surfaces include side flares).

Concrete paver units shall be saw cut only and any cut unit shall not be less than 25 percent of a full unit.

Texas Department of Transportation
Design Division (Roadway)

PEDESTRIAN FACILITIES

INTERSECTION LAYOUTS AND DETECTABLE WARNINGS

PED-02

SHEET 3 OF 3

FILE: ped02.dgn	DN: MAM	CK: MAM	DW: BGD	CK:
© TxDOT March 2002	DIST	FED REG	FEDERAL AID PROJECT #	SHEET
REVISIONS	AUS	6	CC 337-1-29	91
	COUNTY		CONTROL	SECT	JOB	HIGHWAY
	WILLIAMSON		0337	01	029	SH 29

...\paving\ped02.dgn 09/21/2004 10:43:56 AM

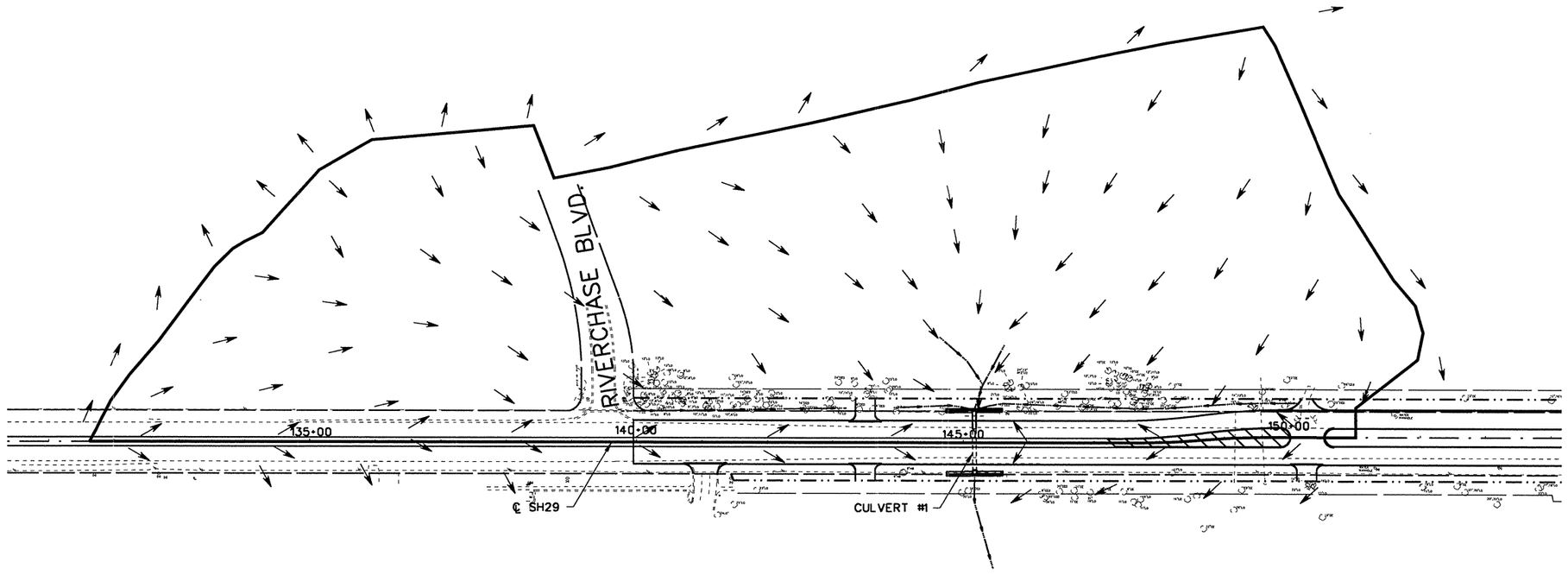

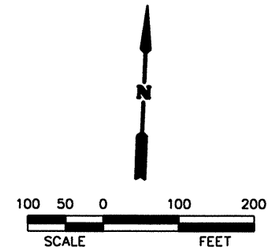

LEGEND:

CUL1 ← DRAINAGE AREA NUMBER
XXX ← DRAINAGE AREA (ACRE)
← DRAINAGE FLOW DIRECTION

DRIVEWAY CULVERT NO.	UPSTREAM ℄			DOWNSTREAM ℄			CULVERT DESCRIPTION
	STATION	OFFSET	℄ ELEV.	STATION	OFFSET	℄ ELEV.	
1	145+16.34	52.0' LT.	812.35	145+17.31	50.0' LT.	811.55	1-5'X6' SBC

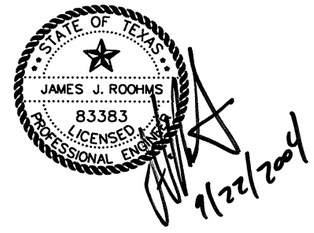

NO.	REVISION	BY	DATE

CP&Y Chiang, Patel & Yerby, Inc.

© 2004

Texas Department of Transportation

SH 29

EXTERIOR DRAINAGE MAP

		FED. ROAD DIV. NO.	STATE	FEDERAL AID PROJECT NO.				SHEET NO.
Designed:	JWP	6	TEXAS	CC 337-1-29				92
Checked:	JJR	STATE DIST. NO.	COUNTY	CONTROL NO.	SECTION NO.	JOB NO.		HIGHWAY NO.
Drawn:	KGM	14	WILLIAMSON	0337	01	029		SH 29
Checked:	JJR							

1 OF 1

...\wa3\west\common\533wdm01.200 09/21/2004 05:14:12 PM

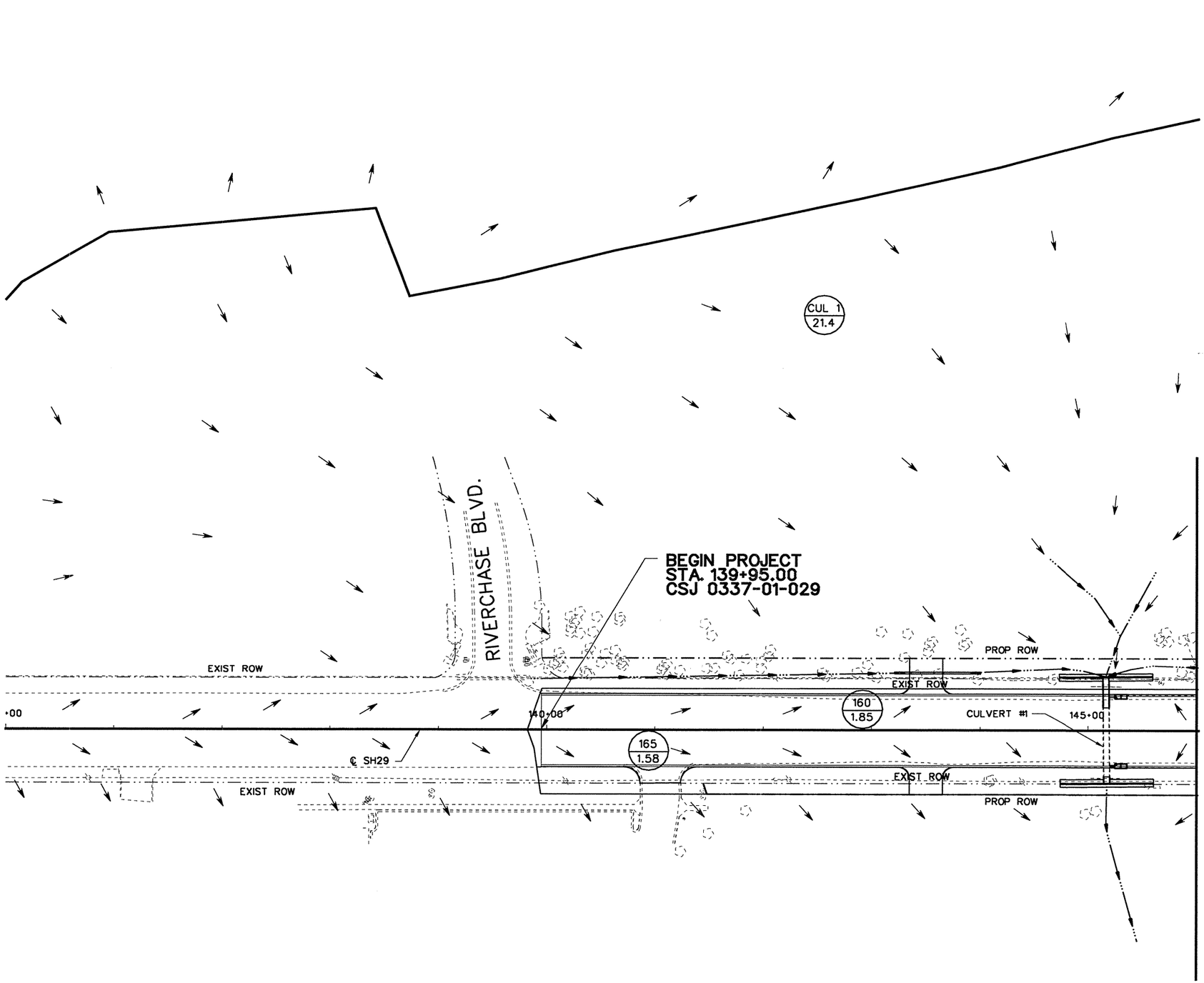

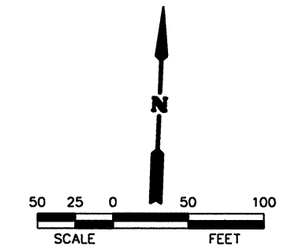

LEGEND	
CUL1 / XXX	DRAINAGE AREA NUMBERS DRAINAGE AREA (ACRES)
←	DRAINAGE FLOW DIRECTION
←····	DITCH FLOW DIRECTION

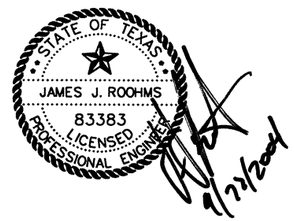

NO.	REVISION	BY	DATE

Chiang, Patel & Yerby, Inc.

© 2004

Texas Department of Transportation

SH 29

INTERIOR DRAINAGE MAP

BEGIN PROJECT TO STA. 146+00

		FED. ROAD DIV. NO.	STATE	FEDERAL AID PROJECT NO.			SHEET NO.
Designed:	KGM	6	TEXAS	CC 337-1-29			93
Checked:	JJR	STATE DIST. NO.	COUNTY	CONTROL NO.	SECTION NO.	JOB NO.	HIGHWAY NO.
Drawn:	KGM	14	WILLIAMSON	0337	01	029	SH 29
Checked:	JJR						

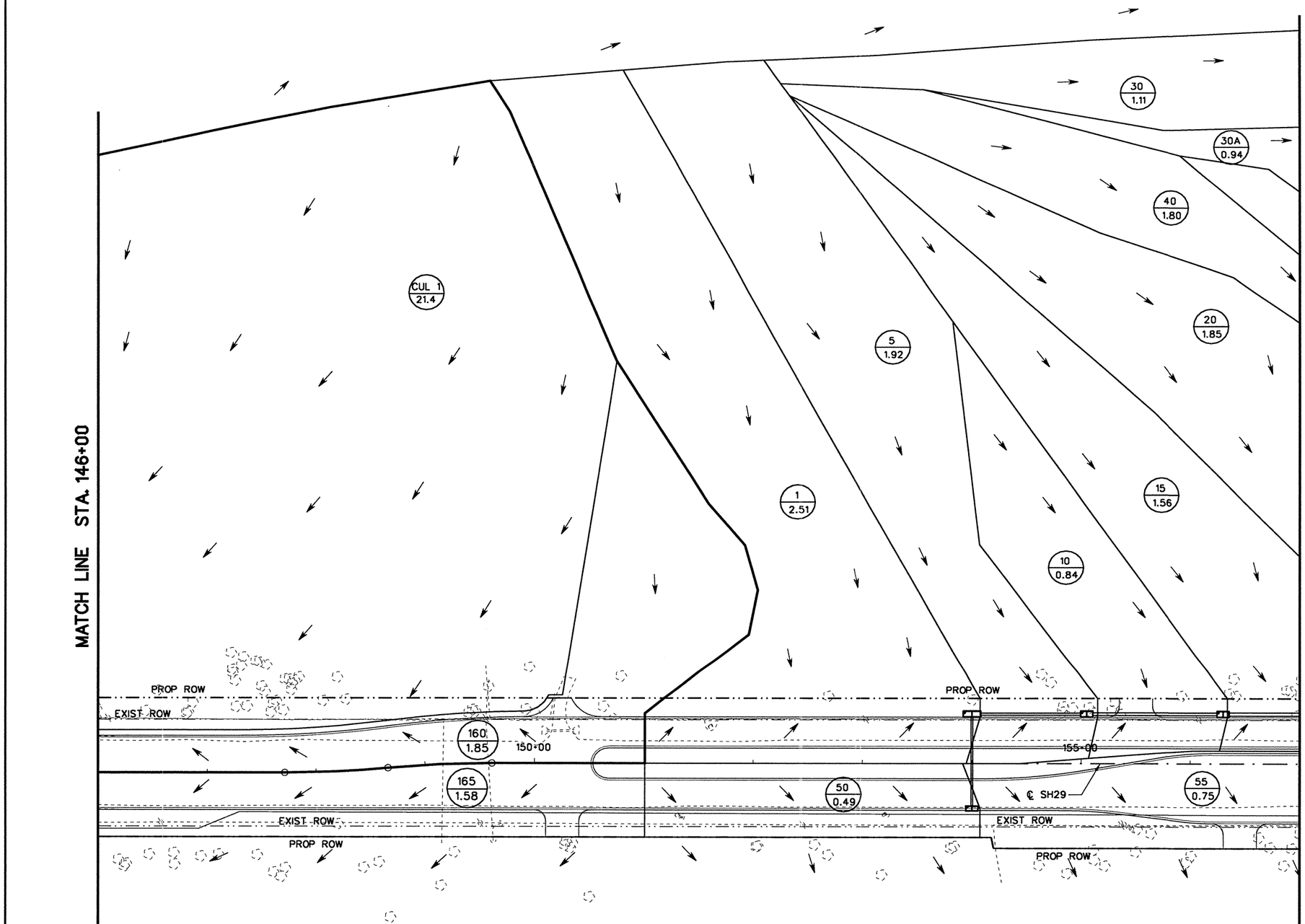

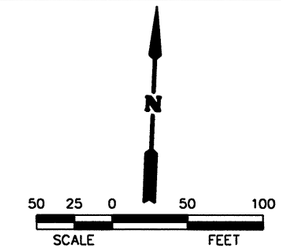

LEGEND	
CUL 1 / XXX	DRAINAGE AREA NUMBERS / DRAINAGE AREA (ACRES)
←	DRAINAGE FLOW DIRECTION
←···	DITCH FLOW DIRECTION

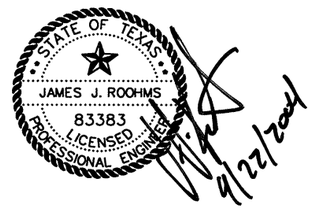

NO.	REVISION	BY	DATE

Chiang, Patel & Yerby, Inc.

© 2004

Texas Department of Transportation

SH 29

INTERIOR DRAINAGE MAP

STA. 146+00 TO STA. 157+00

Designed:	KGM	FED. ROAD DIV. NO.	STATE	FEDERAL AID PROJECT NO.				SHEET NO.
Checked:	JJR	6	TEXAS	CC 337-1-29				94
Drawn:	KGM	STATE DIST. NO.	COUNTY	CONTROL NO.	SECTION NO.	JOB NO.	HIGHWAY NO.	
Checked:	JJR	14	WILLIAMSON	0337	01	029	SH 29	

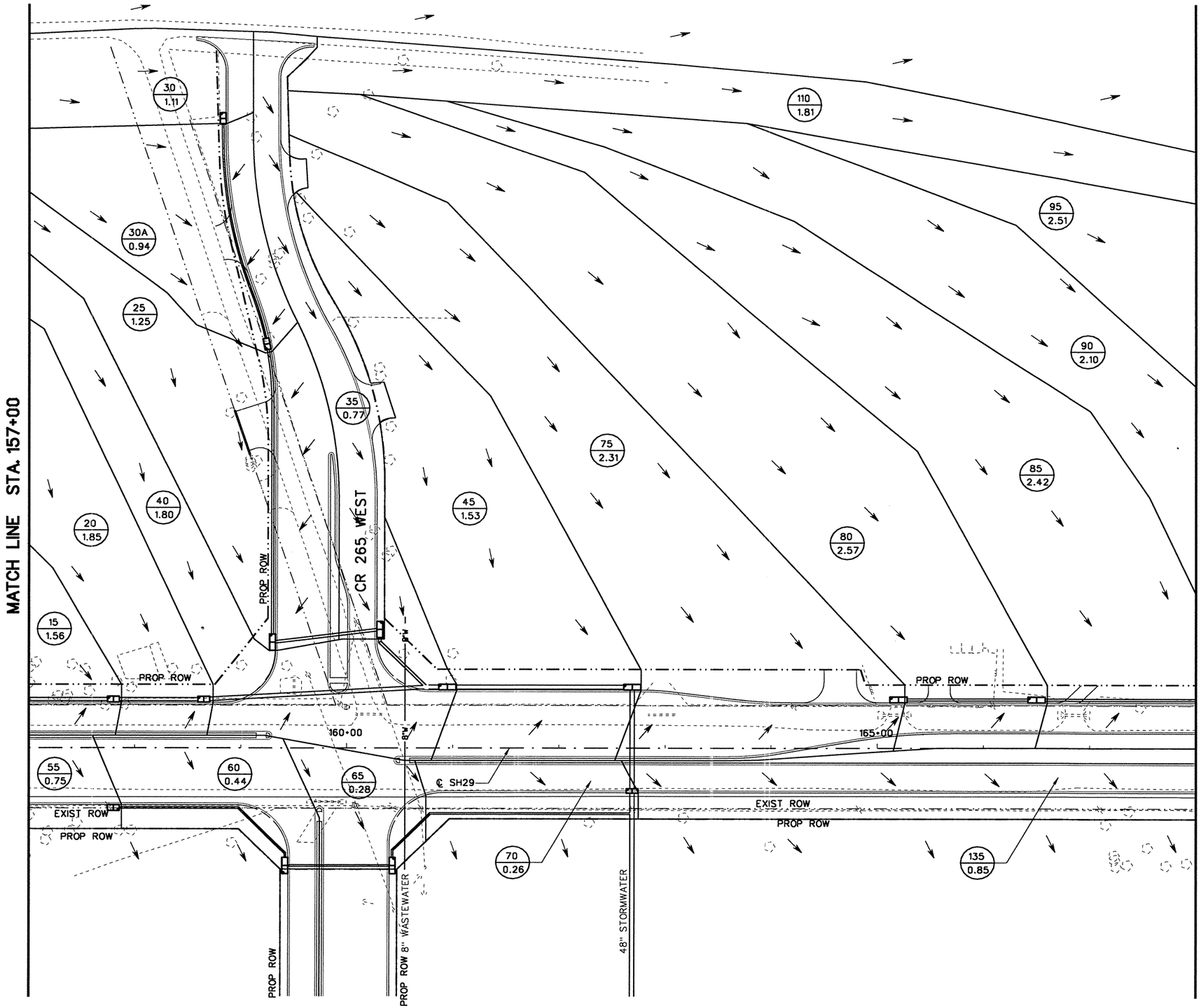

STATE OF TEXAS
JAMES J. ROOHMS
83383
LICENSED
PROFESSIONAL ENGINEER
9/22/2004

NO.	REVISION	BY	DATE

CP&Y Chiang, Patel & Yerby, Inc.

© 2004

Texas Department of Transportation

SH 29

INTERIOR DRAINAGE MAP
STA. 157+00 TO STA. 168+00

		FED. ROAD DIV. NO.	STATE	FEDERAL AID PROJECT NO.				SHEET NO.
Designed:	KGM	6	TEXAS	CC 337-1-29				05
Checked:	JJR	STATE DIST. NO.	COUNTY	CONTROL NO.	SECTION NO.	JOB NO.	HIGHWAY NO.	
Drawn:	KGM	14	WILLIAMSON	0337	01	029	SH 29	
Checked:	JJR							

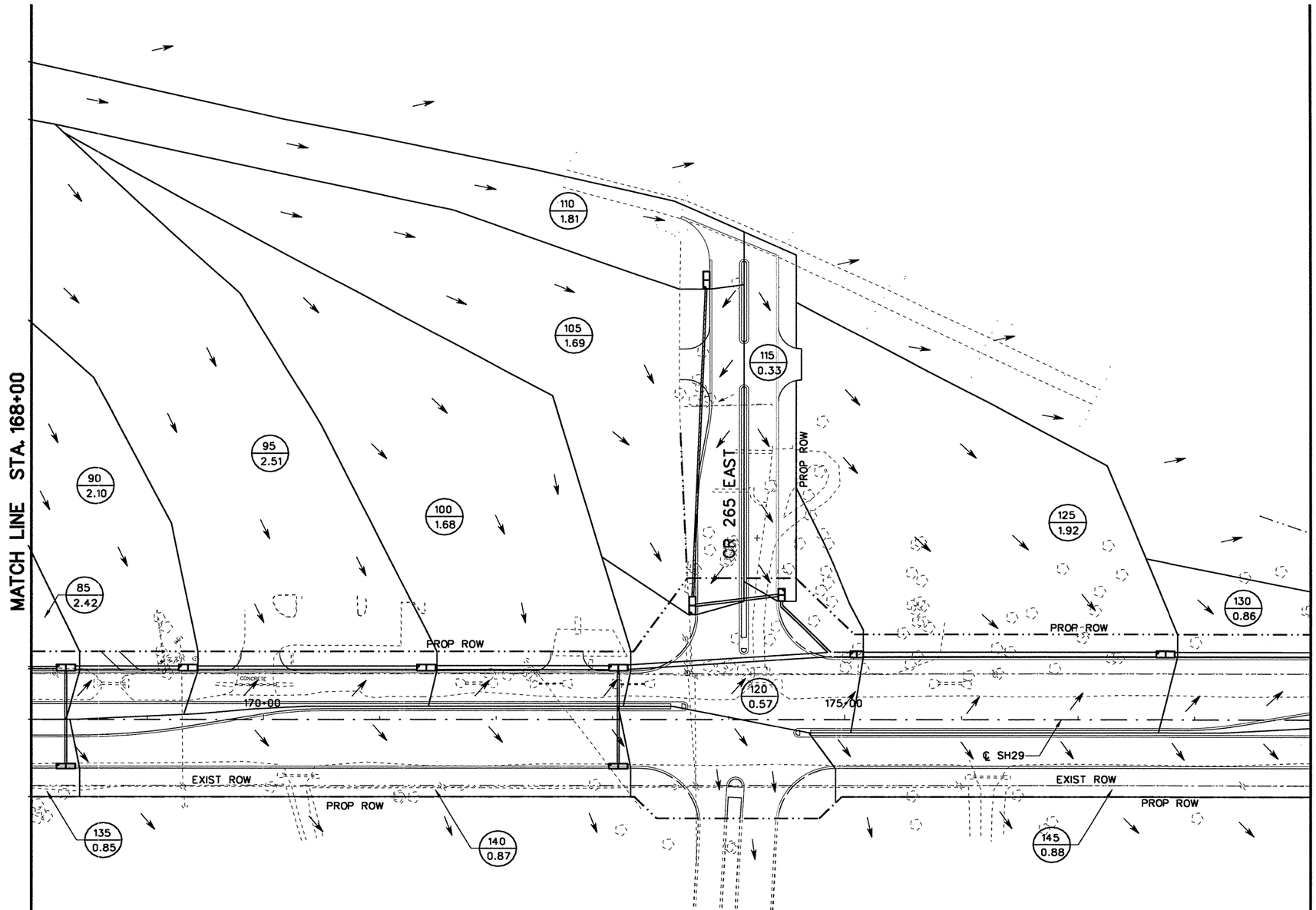

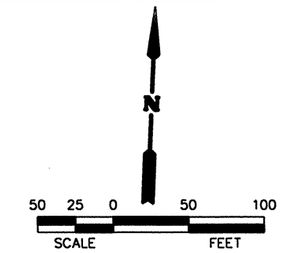

LEGEND	
CUL1 / XXX	DRAINAGE AREA NUMBERS / DRAINAGE AREA (ACRES)
←	DRAINAGE FLOW DIRECTION
←···	DITCH FLOW DIRECTION

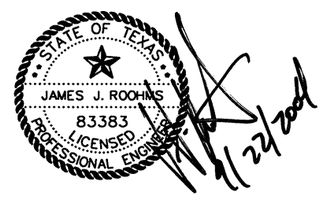

NO.	REVISION	BY	DATE

© 2004

CP&Y Chiang, Patel & Yerby, Inc.

Texas Department of Transportation

SH 29

INTERIOR DRAINAGE MAP
STA. 168+00 TO STA. 179+00

		FED. ROAD DIV. NO.	STATE	FEDERAL AID PROJECT NO.			SHEET NO.
Designed:	KGM	6	TEXAS	CC 337-1-29			0/6
Checked:	JJR	STATE DIST. NO.	COUNTY	CONTROL NO.	SECTION NO.	JOB NO.	HIGHWAY NO.
Drawn:	KGM	14	WILLIAMSON	0337	01	029	SH 29
Checked:	JJR						

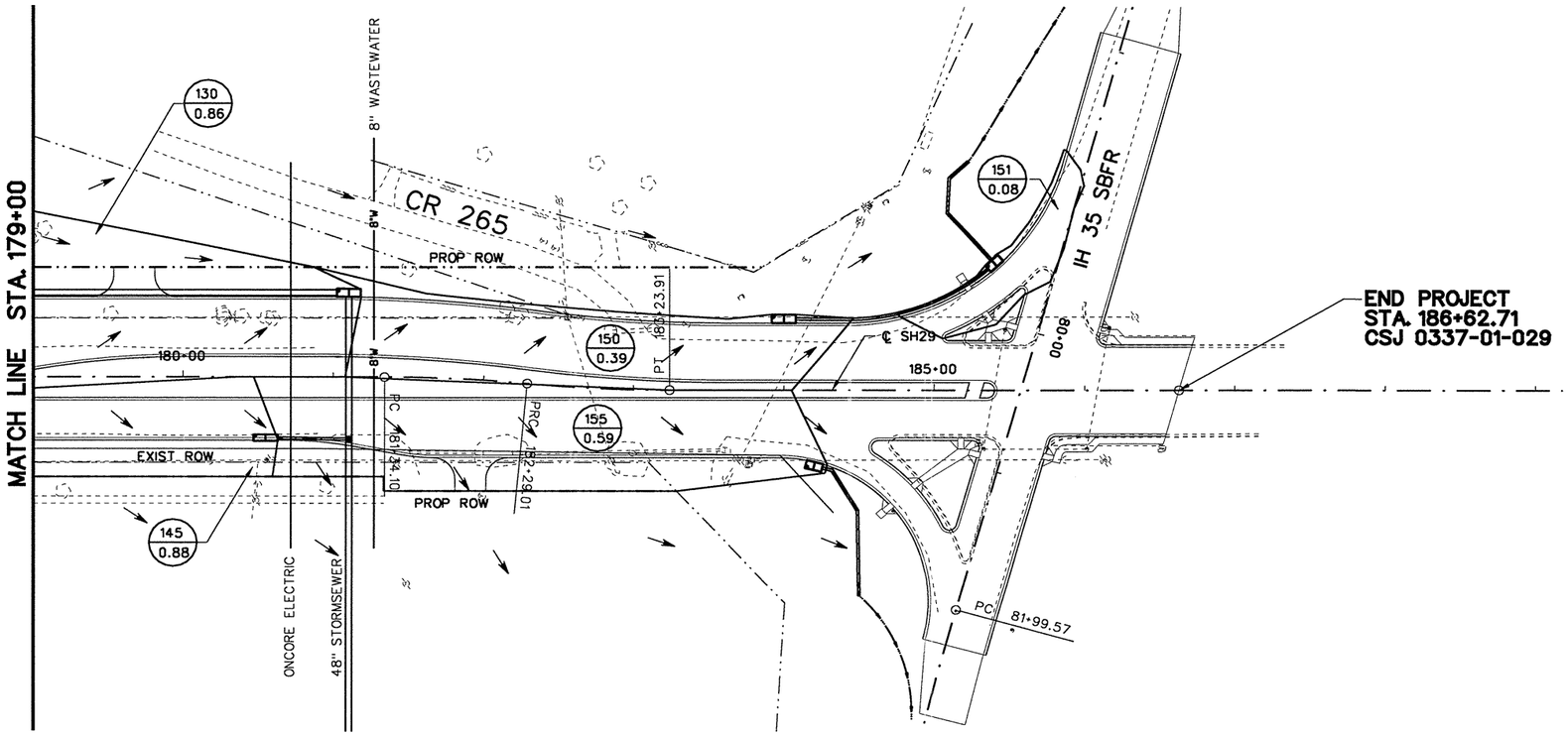

N

50 25 0 50 100

SCALE FEET

LEGEND	
CUL1 / XXX	DRAINAGE AREA NUMBERS / DRAINAGE AREA (ACRES)
←	DRAINAGE FLOW DIRECTION
←···	DITCH FLOW DIRECTION

STATE OF TEXAS
JAMES J. ROOHMS
83383
LICENSED
PROFESSIONAL ENGINEER
9/22/04

NO.	REVISION	BY	DATE

CP&Y Chiang, Patel & Yerby, Inc.

© 2004

Texas Department of Transportation

SH 29

INTERIOR DRAINAGE MAP
STA. 179+00 TO END PROJECT

Designed:	KGM	FED. ROAD DIV. NO.	STATE	FEDERAL AID PROJECT NO.				SHEET NO.
Checked:	JJR	6	TEXAS	CC 337-1-29				97
Drawn:	KGM	STATE DIST. NO.	COUNTY		CONTROL NO.	SECTION NO.	JOB NO.	HIGHWAY NO.
Checked:	JJR	14	WILLIAMSON		0337	01	029	SH 29

WinStorm (STORM DRAIN DESIGN)

Version 3.05, Jan. 25, 2002
Run @ 9/7/2004 10:29:59 AM

PROJECT NAME : SH29 WEST
JOB NUMBER : TXDO153-3
PROJECT DESCRIPTION : STORMSEWER SYSTEM A
DESIGN FREQUENCY : 10 Years
MEASUREMENT UNITS: ENGLISH

OUTPUT FOR DESIGN FREQUENCY of: 10 Years

Runoff Computation for Design Frequency.

ID	C Value	Area (acre)	Tc (min)	Tc Used (min)	Intensity (in/hr)	Supply Q (cfs)	Total Q (cfs)
C1-1	0.333	2.51	10.00	10.00	7.98	0.000	6.666
	0.9	0.32	Pavement				
	0.25	2.19	Undeveloped				
C1-10	0.32	0.84	10.00	10.00	7.98	0.000	2.142
	0.9	0.09	Pavement				
	0.25	0.75	Undeveloped				
C1-20	0.271	1.85	10.00	10.00	7.98	0.000	4.001
	0.9	0.06	Pavement				
	0.25	1.79	Undeveloped				
C1-25	0.458	1.25	10.00	10.00	7.98	0.000	4.567
	0.9	0.40	Pavement				
	0.25	0.85	Undeveloped				
C1-35	0.664	0.77	10.00	10.00	7.98	0.000	4.077
	0.9	0.49	Pavement				
	0.25	0.28	Undeveloped				
C1-40	0.394	1.80	10.00	10.00	7.98	0.000	5.664
	0.9	0.40	Pavement				
	0.25	1.40	Undeveloped				
C1-45	0.36	1.53	10.00	10.00	7.98	0.000	4.400
	0.9	0.26	Pavement				
	0.25	1.27	Undeveloped				
C1-50	0.661	0.49	10.00	10.00	7.98	0.000	2.585
	0.9	0.31	Pavement				
	0.25	0.18	Undeveloped				
C1-55	0.692	0.75	10.00	10.00	7.98	0.000	4.141
	0.9	0.51	Pavement				
	0.25	0.24	Undeveloped				
C1-60	0.752	0.44	10.00	10.00	7.98	0.000	2.641
	0.9	0.34	Pavement				
	0.25	0.10	Undeveloped				
C1-65	0.83	0.28	10.00	10.00	7.98	0.000	1.855
	0.9	0.25	Pavement				
	0.25	0.03	Undeveloped				
C1-70	0.6	0.26	10.00	10.00	7.98	0.000	1.245
	0.9	0.14	Pavement				
	0.25	0.12	Undeveloped				
C1-5	0.294	1.92	10.00	10.00	7.98	0.000	4.504
	0.9	0.13	Pavement				
	0.25	1.79	Undeveloped				
C1-15	0.296	1.56	10.00	10.00	7.98	0.000	3.682
	0.9	0.11	Pavement				
	0.25	1.45	Undeveloped				
C1-30	0.379	1.11	10.00	10.00	7.98	0.000	3.355
	0.9	0.22	Pavement				
	0.25	0.89	Undeveloped				
C1-30A	0.423	0.94	10.00	10.00	7.98	0.000	3.171
	0.9	0.25	Pavement				
	0.25	0.69	Undeveloped				

△ ADDITIONAL Q IN PROPOSED NODE IS THE Q CALCULATED FOR A FUTURE DEVELOPED C VALUE OF 0.07 MINUS THE Q VALUE CALCULATED WITH THE UNDEVELOPED C VALUE OF 0.25



On Grade Inlet Configuration Data

Inlet ID	Inlet Type	Inlet Length (ft)	Slopes Long (%)	Slopes Trans (%)	Gutter n	Gutter Depr. (ft)	Grate Width (ft)	Grate Type	Pond Width Allowed (ft)	Critic Elev. (ft)
C1-1	Curb	15.00	1.00	2.00	0.014	0.33	n/a	n/a	14.00	830.52
C1-10	Curb	10.00	0.40	2.00	0.014	0.33	n/a	n/a	14.00	828.29
C1-20	Curb	10.00	0.40	2.00	0.014	0.33	n/a	n/a	14.00	827.45
C1-25	Curb	15.00	2.50	2.00	0.014	0.33	n/a	n/a	14.00	826.78
C1-35	Curb	15.00	2.50	2.00	0.014	0.33	n/a	n/a	14.00	827.58
C1-40	Curb	15.00	1.33	2.00	0.014	0.33	n/a	n/a	14.00	825.47
C1-45	Curb	15.00	1.33	2.00	0.014	0.33	n/a	n/a	14.00	823.00
C1-50	Curb	10.00	1.00	2.00	0.014	0.33	n/a	n/a	14.00	830.52
C1-55	Curb	10.00	0.40	2.00	0.014	0.33	n/a	n/a	14.00	827.45
C1-60	Curb	15.00	4.50	2.00	0.014	0.33	n/a	n/a	14.00	823.70
C1-65	Curb	15.00	4.50	2.00	0.014	0.33	n/a	n/a	14.00	822.98
C1-70	Curb	10.00	1.33	2.00	0.014	0.33	n/a	n/a	14.00	823.24
C1-5	Curb	10.00	0.98	2.00	0.014	0.33	n/a	n/a	14.00	829.49
C1-15	Curb	10.00	0.40	2.00	0.014	0.33	n/a	n/a	14.00	827.69
C1-30	Curb	10.00	0.35	2.00	0.014	0.33	n/a	n/a	14.00	834.79
C1-30A	Curb	10.00	1.63	2.00	0.014	0.33	n/a	n/a	14.00	831.07

On Grade Inlets Conmputation Data.

Inlet ID	Inlet Type	Total Q (cfs)	Intercept Capacity (cfs)	Q Bypass Allow (cfs)	Q Bypass Actual (cfs)	To Inlet ID	Required Length (ft)	Actual Length (ft)	Ponded Width (ft)
C1-1	Curb	6.666	6.663	0.003	0.003	C1-5	15.22	15.00	13.95
C1-10	Curb	2.318	2.318	0.000	0.000		6.67	10.00	11.15
C1-20	Curb	4.001	4.001	0.000	0.000		9.25	10.00	13.70
C1-25	Curb	4.603	4.603	0.000	0.000		14.86	15.00	10.25
C1-35	Curb	4.077	4.077	0.000	0.000		13.86	15.00	9.80
C1-40	Curb	5.664	5.664	0.000	0.000		14.64	15.00	12.45
C1-45	Curb	4.400	4.400	0.000	0.000		12.59	15.00	11.30
C1-50	Curb	2.585	2.585	0.000	0.000		8.69	10.00	9.80
C1-55	Curb	4.141	4.141	0.000	0.000		9.43	10.00	13.85
C1-60	Curb	2.641	2.641	0.000	0.000		12.49	15.00	7.45
C1-65	Curb	1.855	1.855	0.000	0.000		10.37	15.00	6.50
C1-70	Curb	1.245	1.245	0.000	0.000		6.22	10.00	7.05
C1-5	Curb	4.507	4.331	0.176	0.176	C1-10	11.98	10.00	12.10
C1-15	Curb	3.682	3.682	0.000	0.000		8.78	10.00	13.25
C1-30	Curb	3.355	3.355	0.000	0.000		8.08	10.00	13.15
C1-30A	Curb	3.171	3.136	0.900	0.036	C1-25	10.90	10.00	9.65

Cumulative Junction Discharge Computations

Node I.D.	Node Type	Weighted C-Value	Cumulat. Dr.Area (acres)	Cumulat. Tc (min)	Intens. (in/hr)	User Supply Q cfs)	Additional△ Q in Node (cfs)	Total Disch. (cfs)
C1-1	Curb	0.387	3.00	10.26	7.89	0.000	8.51	17.659
C1-10	Curb	0.346	5.76	10.70	7.75	0.000	17.63	33.073
C1-20	Curb	0.322	9.17	11.24	7.59	0.000	29.27	51.690
C1-25	Curb	0.421	3.30	11.03	7.65	0.000	8.73	19.365
C1-35	Curb	0.467	4.07	11.18	7.60	0.000	9.74	24.196
C1-40	Curb	0.370	15.04	11.63	7.47	0.000	44.04	85.640
C1-45	Curb	0.369	16.57	11.95	7.38	0.000	48.60	93.760
C1-50	Curb	0.661	0.49	10.00	7.98	0.000	0.65	3.235
C1-55	Curb	0.692	0.75	10.00	7.98	0.000	0.86	5.001
C1-60	Curb	0.714	1.19	10.44	7.83	0.000	1.22	7.879
C1-65	Curb	0.736	1.47	10.76	7.73	0.000	1.33	9.701
C1-70	Curb	0.373	16.83	12.12	7.33	0.000	49.03	95.042
C1-5	Curb	0.350	4.92	10.47	7.82	0.000	14.94	28.426
C1-15	Curb	0.335	7.32	11.09	7.63	0.000	22.84	41.565
C1-30	Curb	0.379	1.11	10.00	7.98	0.000	3.20	6.555
JB-1	JnctBx	0.367	13.24	11.60	7.48	0.000	39.01	75.347
JB-1A	JnctBx	0.402	18.30	12.16	7.32	0.000	50.36	104.235
C1-30A	Curb	0.399	2.05	10.50	7.81	0.000	5.68	12.073
◎ EX-IN	JnctBx	0.402	18.30	12.16	7.32	0.000	50.36	104.235
◎ EX-A1	JnctBx	0.402	18.30	12.16	7.32	0.000	50.36	104.235
◎ EX-A2	JnctBx	0.402	18.30	12.16	7.32	0.000	50.36	104.235
◎ EX-A3	JnctBx	0.402	18.30	12.16	7.32	0.000	62.57	116.445
◎ EX-A4	JnctBx	0.402	18.30	12.16	7.32	0.000	89.02	142.895
◎ EX-A5	JnctBx	0.402	18.30	12.16	7.32	0.000	96.55	150.425
◎ OUT	Outlt	0.402	18.30	12.16	7.32	0.000	96.55	150.425

Conveyance Configuration Data

Run#	Node US	Node DS	I.D.	Flowline Elev. US (ft)	Flowline Elev. DS (ft)	Shape #	Span (ft)	Rise (ft)	Length (ft)	Slope (%)	n_value
1	C1-1	C1-5		827.20	826.20	Circ 1	0.00	2.00	104.93	0.95	0.012
2	C1-5	C1-10		825.70	824.70	Circ 1	0.00	2.50	121.57	0.82	0.012
3	C1-10	C1-15		824.20	823.70	Circ 1	0.00	3.00	153.63	0.33	0.012
4	C1-15	C1-20		823.70	823.00	Circ 1	0.00	3.00	86.18	0.81	0.012
5	C1-20	JB-1		822.50	821.00	Circ 1	0.00	3.50	210.62	0.71	0.012
7	JB-1	C1-40		820.50	820.36	Circ 1	0.00	4.00	19.72	0.71	0.012
8	C1-40	C1-45		818.72	818.00	Circ 1	0.00	4.00	173.51	0.41	0.012
9	C1-45	C1-70		818.00	817.50	Circ 1	0.00	4.00	100.64	0.50	0.012
10	C1-30	C1-30A		833.00	830.00	Circ 1	0.00	1.50	223.15	1.34	0.012
11	C1-30A	C1-25		829.50	825.00	Circ 1	0.00	2.00	292.65	1.54	0.012
12	C1-50	C1-1		828.70	827.70	Circ 1	0.00	1.50	91.00	1.10	0.012
13	C1-55	C1-60		824.50	821.50	Circ 1	0.00	1.50	192.53	1.56	0.012
16	C1-70	JB-1A		810.91	810.80	Circ 1	0.00	4.00	21.92	0.50	0.012
14	C1-60	C1-65		821.50	821.00	Circ 1	0.00	1.50	100.50	0.50	0.012
15	C1-65	JB-1A		820.00	812.05	Circ 1	0.00	1.50	253.05	3.14	0.012
17	JB-1A	EX-IN		810.80	810.77	Circ 1	0.00	4.00	5.00	0.66	0.012
18	C1-25	C1-35		824.00	822.00	Circ 1	0.00	2.50	101.88	1.96	0.012
19	C1-35	JB-1		822.00	821.50	Circ 1	0.00	2.50	74.75	0.67	0.012
◎ 20	EX-IN	EX-A1		810.77	805.20	Circ 1	0.00	4.00	303.00	1.84	0.012
◎ 21	EX-A1	EX-A2		802.40	800.50	Circ 1	0.00	4.00	75.00	2.53	0.012
◎ 22	EX-A2	EX-A3		797.18	795.00	Circ 1	0.00	4.00	88.00	2.48	0.012
◎ 23	EX-A3	EX-A4		791.33	783.10	Circ 1	0.00	4.50	387.00	2.13	0.012
◎ 24	EX-A4	EX-A5		782.60	780.12	Circ 1	0.00	5.00	123.00	2.02	0.012
◎ 25	EX-A5	OUT		771.98	770.00	Circ 1	0.00	5.00	110.00	1.80	0.012

Conveyance Hydraulic Computations. Tailwater = 0.000 (ft)

Run#	Hydraulic Gradeline US Elev (ft)	Hydraulic Gradeline DS Elev (ft)	Fr.Slope (%)	Depth Unif. (ft)	Depth Actual (ft)	Velocity Unif. (f/s)	Velocity Actual (f/s)	Q (cfs)	Cap (cfs)	Junc Loss (ft)
1*	828.48	827.48	0.519	1.28	1.28	8.31	8.31	17.66	23.93	0.000
2*	827.24	826.24	0.409	1.54	1.54	8.94	8.94	28.43	40.31	0.000
3	826.22	825.57	0.209	2.02	2.02	6.55	6.55	33.07	41.23	0.000
4*	825.45	824.75	0.331	1.75	1.75	9.74	9.74	41.56	65.13	0.000
5*	824.37	822.87	0.225	1.87	1.87	9.86	9.86	51.69	91.99	0.000
7*	822.67	822.53	0.234	2.17	2.17	10.81	10.81	75.35	131.14	0.000
8	821.56	820.84	0.303	2.84	2.84	8.96	8.96	85.64	100.26	0.000
9*	820.84	820.34	0.363	2.84	2.84	9.81	9.81	93.76	109.70	0.000
10*	833.75	830.75	0.332	0.75	0.75	7.46	7.46	6.55	13.20	0.000
11*	830.38	825.88	0.243	0.88	0.88	9.14	9.14	12.07	30.40	0.000
12*	829.23	828.48	0.081	0.53	0.78	5.75	3.48	3.23	11.93	0.000
13*	825.12	822.70	0.193	0.62	1.20	7.33	3.31	5.00	14.21	0.000
16*	813.79	813.68	0.373	2.88	2.88	9.83	9.83	95.04	110.25	0.000
14	822.70	822.09	0.479	1.20	1.20	5.22	5.22	7.88	8.03	0.000
15*	821.20	813.58	0.726	0.73	1.50	11.32	5.49	9.70	20.18	0.000
17*	813.58	813.55	0.449	2.78	2.78	11.18	11.18	104.24	126.44	0.000
18*	824.99	823.48	0.190	0.96	1.48	11.20	6.38	19.37	62.27	0.000
19*	823.48	822.98	0.296	1.48	1.48	7.97	7.97	24.20	36.35	0.000
◎ 20*	812.75	807.18	0.449	1.98	1.98	16.76	16.76	104.24	210.98	0.000
◎ 21*	804.21	802.31	0.449	1.81	1.81	18.89	18.89	104.24	247.75	0.000
◎ 22*	799.00	796.82	0.449	1.82	1.82	18.73	18.73	104.24	245.00	0.000
◎ 23*	793.24	785.01	0.299	1.91	1.91	18.15	18.15	116.45	310.75	0.000
◎ 24*	784.66	782.18	0.256	2.06	2.06	18.72	18.72	142.90	400.73	0.000
◎ 25*	774.17	772.19	0.284	2.19	2.19	18.16	18.16	150.43	378.62	0.000

END

* Super critical flow.

◎ EXISTING STORMSEWER SYSTEM.

1 OF 4

NO.	REVISION	BY	DATE

CP&Y Chiang, Patel & Yerby, Inc.

© 2004

Texas Department of Transportation

SH 29

WINSTORM COMPUTATIONS
SYSTEM A

Designed:	KGM	FED. ROAD DIV. NO.: 6	STATE: TEXAS	FEDERAL AID PROJECT NO.: CC 337-1-29			SHEET NO.: 98
Checked:	JJR						
Drawn:	KGM	STATE DIST. NO.: 14	COUNTY: WILLIAMSON	CONTROL NO.: 0337	SECTION NO.: 01	JOB NO.: 029	HIGHWAY NO.: SH 29
Checked:	JJR						

WinStorm (STORM DRAIN DESIGN)

Version 3.05, Jan. 25, 2002
Run @ 9/7/2004 10:52:40 AM

PROJECT NAME : SH29 WEST
JOB NUMBER : TXD0153-3
PROJECT DESCRIPTION : STORMSEWER SYSTEM B
DESIGN FREQUENCY : 10 Years
MEASUREMENT UNITS: ENGLISH

OUTPUT FOR DESIGN FREQUENCY of: 10 Years

Runoff Computation for Design Frequency.

ID	C Value	Area (acre)	Tc (min)	Tc Used (min)	Intensity (in/hr)	Supply Q (cfs)	Total Q (cfs)
CI-75	0.354	2.31	10.00	10.00	7.98	0.000	6.526
	0.9	0.37	Pavement				
	0.25	1.94	Undeveloped				
CI-80	0.288	2.57	10.00	10.00	7.98	0.000	5.904
	0.9	0.15	Pavement				
	0.25	2.42	Undeveloped				
CI-90	0.284	2.10	10.00	10.00	7.98	0.000	4.759
	0.9	0.11	Pavement				
	0.25	1.99	Undeveloped				
CI-95	0.297	2.51	10.00	10.00	7.98	0.000	5.940
	0.9	0.18	Pavement				
	0.25	2.33	Undeveloped				
CI-100	0.304	1.68	10.00	10.00	7.98	0.000	4.077
	0.9	0.14	Pavement				
	0.25	1.54	Undeveloped				
CI-105	0.346	1.69	10.00	10.00	7.98	0.000	4.667
	0.9	0.25	Pavement				
	0.25	1.44	Undeveloped				
CI-110	0.365	1.81	10.00	10.00	7.98	0.000	5.270
	0.9	0.32	Pavement				
	0.25	1.49	Undeveloped				
CI-115	0.723	0.33	10.00	10.00	7.98	0.000	1.903
	0.9	0.24	Pavement				
	0.25	0.09	Undeveloped				
CI-120	0.649	0.57	10.00	10.00	7.98	0.000	2.952
	0.9	0.35	Pavement				
	0.25	0.22	Undeveloped				
CI-125	0.392	1.92	10.00	10.00	7.98	0.000	6.007
	0.9	0.42	Pavement				
	0.25	1.50	Undeveloped				
CI-130	0.613	0.86	10.00	10.00	7.98	0.000	4.204
	0.9	0.48	Pavement				
	0.25	0.38	Undeveloped				
CI-135	0.648	0.85	10.00	10.00	7.98	0.000	4.392
	0.9	0.52	Pavement				
	0.25	0.33	Undeveloped				
CI-140	0.691	0.87	10.00	10.00	7.98	0.000	4.795
	0.9	0.59	Pavement				
	0.25	0.28	Undeveloped				
CI-145	0.634	0.88	10.00	10.00	7.98	0.000	4.452
	0.9	0.52	Pavement				
	0.25	0.36	Undeveloped				
CI-85	0.298	2.42	10.00	10.00	7.98	0.000	5.760
	0.9	0.18	Pavement				
	0.25	2.24	Undeveloped				

◎ EXISTING STORMSEWER SYSTEM.

△ ADDITIONAL Q IN PROPOSED NODE IS THE Q CALCULATED FOR A FUTURE DEVELOPED C VALUE OF 0.07 MINUS THE Q VALUE CALCULATED WITH THE UNDEVELOPED C VALUE OF 0.25

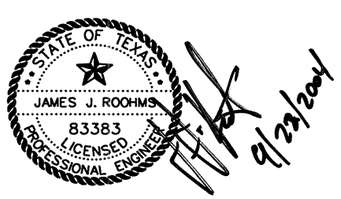

On Grade Inlet Configuration Data

Inlet ID	Inlet Type	Inlet Length (ft)	Slopes Long (%)	Slopes Trans (%)	Gutter n	Gutter Depr. (ft)	Grate Width (ft)	Grate Type	Pond Width Allowed (ft)	Critic Elev. (ft)
CI-75	Curb	15.00	1.30	2.00	0.014	0.33	n/a	n/a	14.00	819.96
CI-80	Curb	15.00	1.00	2.00	0.014	0.33	n/a	n/a	14.00	818.66
CI-90	Curb	15.00	1.00	2.00	0.014	0.33	n/a	n/a	14.00	815.81
CI-95	Curb	15.00	1.00	2.00	0.014	0.33	n/a	n/a	14.00	813.76
CI-100	Curb	15.00	1.00	2.00	0.014	0.33	n/a	n/a	14.00	812.22
CI-105	Curb	15.00	1.50	2.00	0.014	0.33	n/a	n/a	14.00	810.98
CI-110	Curb	15.00	1.06	2.00	0.014	0.33	n/a	n/a	14.00	814.49
CI-115	Curb	10.00	1.50	2.00	0.014	0.33	n/a	n/a	14.00	811.36
CI-120	Curb	10.00	1.00	2.00	0.014	0.33	n/a	n/a	14.00	809.99
CI-125	Curb	15.00	1.00	2.00	0.014	0.33	n/a	n/a	14.00	807.16
CI-130	Curb	15.00	1.00	2.00	0.014	0.33	n/a	n/a	14.00	800.65
CI-135	Curb	15.00	1.00	2.00	0.014	0.33	n/a	n/a	14.00	816.86
CI-140	Curb	15.00	1.00	2.00	0.014	0.33	n/a	n/a	14.00	812.22
CI-145	Curb	15.00	2.20	2.00	0.014	0.33	n/a	n/a	14.00	802.11
CI-85	Curb	15.00	1.00	2.00	0.014	0.33	n/a	n/a	14.00	816.86

On Grade Inlets Conmputation Data.

Inlet ID	Inlet Type	Total Q (cfs)	Intercept Capacity (cfs)	Q Bypass Allow (cfs)	Q Bypass Actual (cfs)	To Inlet ID	Required Length (ft)	Actual Length (ft)	Ponded Width (ft)
CI-75	Curb	6.526	6.491	0.036	0.036	CI-80	15.88	15.00	13.20
CI-80	Curb	5.939	5.939	0.000	0.000		14.18	15.00	13.35
CI-90	Curb	4.759	4.759	0.000	0.000		12.42	15.00	12.30
CI-95	Curb	5.940	5.940	0.000	0.000		14.18	15.00	13.35
CI-100	Curb	4.077	4.077	0.000	0.000		11.33	15.00	11.60
CI-105	Curb	4.667	4.667	0.000	0.000		13.38	15.00	11.30
CI-110	Curb	5.270	5.270	0.000	0.000		13.37	15.00	12.65
CI-115	Curb	1.903	1.903	0.000	0.000		8.04	10.00	8.10
CI-120	Curb	2.952	2.952	0.000	0.000		9.39	10.00	10.30
CI-125	Curb	6.007	6.007	0.000	0.000		14.31	15.00	13.45
CI-130	Curb	4.204	4.204	0.000	0.000		11.54	15.00	11.75
CI-135	Curb	4.392	4.392	0.000	0.000		11.85	15.00	11.95
CI-140	Curb	4.795	4.795	0.000	0.000		12.49	15.00	12.35
CI-145	Curb	4.452	4.452	0.000	0.000		14.16	15.00	10.35
CI-85	Curb	5.760	5.760	0.000	0.000		13.93	15.00	13.20

Cumulative Junction Discharge Computations

Node I.D.	Node Type	Weighted C-Value	Cumulat. Dr.Area (acres)	Cumulat. Tc (min)	Intens. (in/hr)	User Supply Q cfs)	Additional Q in Node (cfs)	Total Disch. (cfs)
CI-75	Curb	0.354	2.31	10.00	7.98	0.000	6.96	13.486
CI-80	Curb	0.319	4.88	10.26	7.89	0.000	15.65	27.946
CI-90	Curb	0.334	10.25	10.71	7.75	0.000	32.01	58.564
CI-95	Curb	0.327	12.76	11.01	7.65	0.000	40.37	72.300
CI-100	Curb	0.345	15.31	11.29	7.57	0.000	46.91	86.905
CI-105	Curb	0.356	3.50	10.65	7.77	0.000	10.52	20.194
CI-110	Curb	0.365	1.81	10.00	7.98	0.000	5.35	10.620
CI-115	Curb	0.387	3.83	10.77	7.73	0.000	10.84	22.309
CI-120	Curb	0.362	19.71	11.63	7.47	0.000	58.54	111.873
CI-125	Curb	0.365	21.63	12.05	7.35	0.000	63.93	121.952
CI-130	Curb	0.374	22.49	12.53	7.22	0.000	65.29	126.077
CI-135	Curb	0.648	0.85	10.00	7.98	0.000	1.18	5.572
CI-140	Curb	0.691	0.87	10.00	7.98	0.000	1.01	5.805
CI-145	Curb	0.634	0.88	10.00	7.98	0.000	1.29	5.742
CI-85	Curb	0.347	8.15	10.55	7.80	0.000	24.87	46.943
JB-2	Junct	0.354	19.14	11.59	7.48	0.000	57.75	108.388
MH-5	CircMh	0.384	23.37	12.68	7.18	0.000	66.58	131.054
JB-3	JnctBx	0.000	0.00	0.00	0.00	0.000	0.00	0.000
EX-IN	JnctBx	0.384	23.37	12.68	7.18	0.000	66.58	131.054
EX-B1	JnctBx	0.384	23.37	12.68	7.18	0.000	91.87	156.344
EX-B2	JnctBx	0.384	23.37	12.68	7.18	0.000	116.96	181.434
EX-B3	JnctBx	0.384	23.37	12.68	7.18	0.000	155.14	219.614
EX-B4	JnctBx	0.384	23.37	12.68	7.18	0.000	176.64	241.114
EX-B5	JnctBx	0.384	23.37	12.68	7.18	0.000	241.13	305.604
EX-B6	JnctBx	0.384	23.37	12.68	7.18	0.000	265.41	329.884
EX-B7	JnctBx	0.384	23.37	12.68	7.18	0.000	272.80	337.274
EX-B8	JnctBx	0.384	23.37	12.68	7.18	0.000	332.41	396.884
OUT	Outlt	0.384	23.37	12.68	7.18	0.000	332.41	396.884

Conveyance Configuration Data

Run#	Node US	Node DS	I.D.	Flowline Elev. US (ft)	Flowline Elev. DS (ft)	Shape #	Span (ft)	Rise (ft)	Length (ft)	Slope (%)	n_value
1	CI-75	CI-80		817.50	816.00	Circ 1	0.00	2.00	131.46	1.14	0.012
2	CI-80	CI-85		816.00	813.50	Circ 1	0.00	2.00	181.77	1.38	0.012
3	CI-85	CI-90		812.50	811.50	Circ 1	0.00	3.00	101.83	0.98	0.012
4	CI-90	CI-95		811.50	809.50	Circ 1	0.00	3.00	205.62	0.97	0.012
5	CI-95	CI-100		809.00	808.00	Circ 1	0.00	3.50	166.54	0.60	0.012
6	CI-100	JB-2		804.94	803.92	Circ 1	0.00	4.00	182.32	0.56	0.012
8	JB-2	CI-120		803.92	803.79	Circ 1	0.00	4.00	22.68	0.57	0.012
9	CI-120	CI-125		803.50	802.00	Circ 1	0.00	4.00	267.51	0.56	0.012
10	CI-125	CI-130		798.20	796.00	Circ 1	0.00	4.00	333.10	0.66	0.012
11	CI-130	MH-5		796.00	795.30	Circ 1	0.00	4.00	101.55	0.69	0.012
12	CI-135	CI-85		815.00	814.00	Circ 1	0.00	1.50	88.22	1.13	0.012
13	CI-140	CI-100		810.40	810.00	Circ 1	0.00	1.50	88.53	0.45	0.012
14	CI-110	CI-105		812.00	809.00	Circ 1	0.00	1.50	289.48	1.04	0.012
15	CI-105	CI-115		808.50	807.25	Circ 1	0.00	2.00	77.69	1.61	0.012
16	CI-115	JB-2		807.25	804.92	Circ 1	0.00	2.00	70.48	3.31	0.012
17	MH-5	EX-IN		789.64	789.48	Circ 1	0.00	4.00	25.89	0.62	0.012
18	CI-145	MH-5		798.50	797.80	Circ 1	0.00	1.50	55.35	1.26	0.012
19	EX-IN	EX-B1		789.48	788.12	Circ 1	0.00	4.00	224.11	0.61	0.012
20	EX-B1	EX-B2		788.12	787.25	Circ 1	0.00	4.00	142.00	0.61	0.012
21	EX-B2	EX-B3		786.25	783.50	Circ 1	0.00	5.00	373.00	0.74	0.012
22	EX-B3	EX-B4		782.50	781.00	Circ 1	0.00	5.00	173.00	0.87	0.012
23	EX-B4	EX-B5		780.00	770.62	Circ 1	0.00	5.00	469.00	2.00	0.012
24	EX-B5	EX-B6		769.12	766.10	Circ 1	0.00	6.50	242.00	1.25	0.012
25	EX-B6	EX-B7		763.52	760.50	Circ 1	0.00	6.50	150.00	2.01	0.012
26	EX-B7	EX-B8		760.50	757.02	Circ 1	0.00	6.50	233.00	1.49	0.012
27	EX-B8	OUT		755.00	754.00	Circ 1	0.00	6.50	60.00	1.67	0.012

Conveyance Hydraulic Computations. Tailwater = 0.000 (ft)

Run#	Hydraulic Gradeline US Elev (ft)	Hydraulic Gradeline DS Elev (ft)	Fr.Slope (%)	Depth Unif. (ft)	Depth Actual (ft)	Velocity Unif. (f/s)	Velocity Actual (f/s)	Q (cfs)	Cap (cfs)	Junc Loss (ft)
1*	818.52	817.59	0.303	1.02	1.59	8.42	5.02	13.49	26.18	0.000
2*	817.59	815.09	1.300	1.59	1.59	10.41	10.41	27.95	28.75	0.000
3*	814.32	813.57	0.422	1.77	2.07	10.82	9.00	46.94	71.62	0.000
4*	813.57	811.57	0.657	2.07	2.07	11.23	11.23	58.56	71.27	0.000
5*	811.49	810.49	0.440	2.49	2.49	9.88	9.88	72.30	84.47	0.000
6*	807.52	806.95	0.312	2.56	3.03	10.22	8.51	86.90	116.41	0.000
8*	806.95	806.82	0.485	3.03	3.03	10.61	10.61	108.39	117.83	0.000
9*	806.63	805.13	0.517	3.13	3.13	10.62	10.62	111.87	116.54	0.000
10*	801.36	799.19	0.614	3.16	3.19	11.47	11.36	121.95	126.48	0.000
11*	799.19	798.49	0.656	3.19	3.19	11.74	11.74	126.08	129.22	0.000
12*	815.71	814.71	0.240	0.71	0.71	6.71	6.71	5.57	12.12	0.000
13	811.38	810.93	0.260	0.98	0.98	4.72	4.72	5.80	7.65	0.000
14*	813.13	810.13	0.871	1.13	1.13	7.43	7.43	10.62	11.59	0.000
15*	809.72	808.94	0.679	1.17	1.69	10.56	7.15	20.19	31.09	0.000
16*	808.94	806.95	0.828	1.00	2.00	14.20	7.10	22.31	44.58	0.000
17	794.87	794.69	0.709	3.75	4.00	10.71	10.43	131.05	122.35	0.000
18*	799.20	798.50	0.255	0.70	0.70	7.06	7.06	5.74	12.80	0.000
19	794.69	793.10	0.709	3.75	4.00	10.71	10.43	131.05	121.24	0.000
20	793.10	790.89	1.009	4.00	4.00	12.44	12.44	156.34	121.82	0.000
21*	789.49	786.74	0.413	3.24	3.24	13.47	13.47	181.43	242.30	0.000
22*	786.00	784.50	0.606	3.50	3.50	14.98	14.98	219.61	262.76	0.000
23*	782.80	773.42	0.730	2.80	2.80	21.29	21.29	241.11	399.11	0.000
24*	772.29	769.27	0.289	3.17	3.17	18.99	18.99	305.60	634.59	0.000
25*	766.57	763.70	0.337	2.89	3.20	23.09	20.29	329.88	806.09	0.000
26*	763.70	760.22	0.353	3.20	3.20	20.74	20.74	337.27	694.25	0.000
27*	758.40	757.40	0.488	3.40	3.40	22.57	22.57	396.88	733.39	0.000

END

* Super critical flow.

NO.	REVISION	BY	DATE

CP&Y Chiang, Patel & Yerby, Inc.

© 2004

Texas Department of Transportation

SH 29

WINSTORM COMPUTATIONS
SYSTEM B

		FED. ROAD DIV. NO.	STATE	FEDERAL AID PROJECT NO.			SHEET NO.
Designed:	KGM	6	TEXAS	CC 337-1-29			99
Checked:	JJR	STATE DIST. NO.	COUNTY	CONTROL NO.	SECTION NO.	JOB NO.	HIGHWAY NO.
Drawn:	KGM	14	WILLIAMSON	0337	01	029	SH 29
Checked:	JJR						

WinStorm (STORM DRAIN DESIGN) Version 3.05, Jan. 25, 2002
Run @ 8/17/2004 6:20:54 PM

PROJECT NAME : SH29 WEST
JOB NUMBER : TXDOT53-3
PROJECT DESCRIPTION : STORMSEWER SYSTEM C
DESIGN FREQUENCY : 10 Years
MEASUREMENT UNITS: ENGLISH

OUTPUT FOR DESIGN FREQUENCY of: 10 Years

Runoff Computation for Design Frequency.

ID	C Value	Area (acre)	Tc (min)	Tc Used (min)	Intensity (in/hr)	Supply Q (cfs)	Total Q (cfs)
C1-160	0.58	1.85	10.00	10.00	7.98	0.000	8.564
	0.9	0.94	Pavement				
	0.25	0.91	Undeveloped				

Sag Inlets Configuration Data.

Inlet ID	Inlet Type	Length/ Perim. (ft)	Grate Area (sf)	Left-Slope Long (%)	Left-Slope Trans (%)	Right-Slope Long (%)	Right-Slope Trans (%)	Gutter n	Gutter DeprW (ft)	Depth Allowed (ft)	Critic Elev. (ft)
C1-160	Curb	10.00	n/a	4.52	2.00	3.75	2.00	0.014	1.50	0.50	822.53

Sag Inlets Computation Data.

Inlet ID	Inlet Type	Length (ft)	Grate Perim (ft)	Grate Area (sf)	Total Q (cfs)	Inlet Capacity (cfs)	Total Head (ft)	Ponded Width Left (ft)	Ponded Width Right (ft)
C1-160	Curb	10.00	n/a	n/a	8.564	10.327	0.441	8.90	9.25

Cumulative Junction Discharge Computations

Node I.D.	Node Type	Weighted C-Value	Cumulat. Dr.Area (acres)	Cumulat. Tc (min)	Intens. (in/hr)	User Supply Q cfs)	Additional Q in Node (cfs)	Total Disch. (cfs)
C1-160	Curb	0.580	1.85	10.00	7.98	0.000	3.27	11.831
OUT	Outlt	0.580	1.85	10.00	7.98	0.000	3.27	11.831

Conveyance Configuration Data

Run#	Node I.D. US	Node I.D. DS	Flowline Elev. US (ft)	Flowline Elev. DS (ft)	Shape #	Span (ft)	Rise (ft)	Length (ft)	Slope (%)	n_value
1	C1-160	OUT	817.00	816.83	Circ 1	0.00	1.50	11.27	1.51	0.012

Conveyance Hydraulic Computations. Tailwater = 0.000 (ft)

Run#	Hydraulic Gradeline US Elev (ft)	Hydraulic Gradeline DS Elev (ft)	Fr.Slope (%)	Depth Unif. (ft)	Depth Actual (ft)	Velocity Unif. (f/s)	Velocity Actual (f/s)	Q (cfs)	Cap (cfs)	Junc Loss (ft)
1*	818.06	817.89	1.081	1.06	1.06	8.86	8.86	11.83	13.98	0.000

END

* Super critical flow.

WinStorm (STORM DRAIN DESIGN) Version 3.05, Jan. 25, 2002
Run @ 8/17/2004 6:21:49 PM

PROJECT NAME : SH29 WEST
JOB NUMBER : TXDOT53-3
PROJECT DESCRIPTION : STORMSEWER SYSTEM D
DESIGN FREQUENCY : 10 Years
MEASUREMENT UNITS: ENGLISH

OUTPUT FOR DESIGN FREQUENCY of: 10 Years

Runoff Computation for Design Frequency.

ID	C Value	Area (acre)	Tc (min)	Tc Used (min)	Intensity (in/hr)	Supply Q (cfs)	Total Q (cfs)
C1-165	0.644	1.58	10.00	10.00	7.98	0.000	8.134
	0.9	0.96	Pavement				
	0.25	0.62	Undeveloped				

Sag Inlets Configuration Data.

Inlet ID	Inlet Type	Length/ Perim. (ft)	Grate Area (sf)	Left-Slope Long (%)	Left-Slope Trans (%)	Right-Slope Long (%)	Right-Slope Trans (%)	Gutter n	Gutter DeprW (ft)	Depth Allowed (ft)	Critic Elev. (ft)
C1-165	Curb	10.00	n/a	4.52	2.00	3.75	2.00	0.014	1.50	0.50	822.53

Sag Inlets Computation Data.

Inlet ID	Inlet Type	Length (ft)	Grate Perim (ft)	Grate Area (sf)	Total Q (cfs)	Inlet Capacity (cfs)	Total Head (ft)	Ponded Width Left (ft)	Ponded Width Right (ft)
C1-165	Curb	10.00	n/a	n/a	8.134	10.327	0.426	8.75	9.05

Cumulative Junction Discharge Computations

Node I.D.	Node Type	Weighted C-Value	Cumulat. Dr.Area (acres)	Cumulat. Tc (min)	Intens. (in/hr)	User Supply Q cfs)	Additional Q in Node (cfs)	Total Disch. (cfs)
C1-165	Curb	0.644	1.58	10.00	7.98	0.000	2.22	10.354
OUT	Outlt	0.644	1.58	10.00	7.98	0.000	2.22	10.354

Conveyance Configuration Data

Run#	Node I.D. US	Node I.D. DS	Flowline Elev. US (ft)	Flowline Elev. DS (ft)	Shape #	Span (ft)	Rise (ft)	Length (ft)	Slope (%)	n_value
1	C1-165	OUT	817.00	816.80	Circ 1	0.00	1.50	10.48	1.91	0.012

Conveyance Hydraulic Computations. Tailwater = 0.000 (ft)

Run#	Hydraulic Gradeline US Elev (ft)	Hydraulic Gradeline DS Elev (ft)	Fr.Slope (%)	Depth Unif. (ft)	Depth Actual (ft)	Velocity Unif. (f/s)	Velocity Actual (f/s)	Q (cfs)	Cap (cfs)	Junc Loss (ft)
1*	817.89	817.69	0.828	0.89	0.89	9.51	9.51	10.35	15.72	0.000

END

* Super critical flow.

▲ ADDITIONAL Q IN PROPOSED NODE IS THE Q CALCULATED FOR A FUTURE DEVELOPED C VALUE OF 0.07 MINUS THE Q VALUE CALCULATED WITH THE UNDEVELOPED C VALUE OF 0.25

STATE OF TEXAS
JAMES J. ROCHMS
83383
LICENSED
PROFESSIONAL ENGINEER
4/22/2004

NO.	REVISION	BY	DATE

CP&Y Chiang, Patel & Yerby, Inc.

© 2004

Texas Department of Transportation

SH 29

WINSTORM COMPUTATIONS
SYSTEM C AND D

		FED. ROAD DIV. NO.	STATE	FEDERAL AID PROJECT NO.				SHEET NO.
Designed:	KGM	6	TEXAS	CC 337-1-29				\OD
Checked:	JJR	STATE DIST. NO.	COUNTY	CONTROL NO.	SECTION NO.	JOB NO.	HIGHWAY NO.	
Drawn:	KGM	14	WILLIAMSON	0337	01	029	SH 29	
Checked:	JJR							

WinStorm (STORM DRAIN DESIGN) Version 3.05, Jan. 25, 2002
Run @ 8/20/2004 1:46:07 PM

PROJECT NAME : SH29 WEST
JOB NUMBER : TXD0153-3
PROJECT DESCRIPTION : STORMSEWER SYSTEM E
DESIGN FREQUENCY : 10 Years
MEASUREMENT UNITS: ENGLISH

OUTPUT FOR DESIGN FREQUENCY of: 10 Years

Runoff Computation for Design Frequency.

ID	C Value	Area (acre)	Tc (min)	Tc Used (min)	Intensity (in/hr)	Supply Q (cfs)	Total Q (cfs)
CI-150	0.85	0.39	10.00	10.00	7.98	0.000	2.645
	0.9	0.36	Pavement				
	0.25	0.03	Undeveloped				
CI-151	0.9	0.08	10.00	10.00	7.98	0.000	0.574
	0.9	0.08	Pavement				
CI-155	0.724	0.59	10.00	10.00	7.98	0.000	3.407
	0.9	0.43	Pavement				
	0.25	0.16	Undeveloped				

On Grade Inlet Configuration Data

Inlet ID	Inlet Type	Inlet Length (ft)	Slopes Long (%)	Slopes Trans (%)	Gutter n	Gutter Depr. (ft)	Grate Width (ft)	Grate Type	Pond Width Allowed (ft)	Critic Elev. (ft)
CI-155	Curb	10.00	1.20	1.72	0.014	0.33	n/a	n/a	14.00	794.47

On Grade Inlets Conmputation Data.

Inlet ID	Inlet Type	Total Q (cfs)	Intercept Capacity (cfs)	Q Bypass Allow (cfs)	Q Bypass Actual (cfs)	To Inlet ID	Required Length (ft)	Actual Length (ft)	Ponded Width (ft)
CI-155	Curb	3.407	3.369	0.038	0.038		10.90	10.00	11.51

Sag Inlets Configuration Data.

Inlet ID	Inlet Type	Length/ Perim. (ft)	Grate Area (sf)	Left-Slope Long (%)	Left-Slope Trans (%)	Right-Slope Long (%)	Right-Slope Trans (%)	Gutter n	Gutter DeprW (ft)	Depth Allowed (ft)	Critic Elev. (ft)
CI-150	Curb	10.00	n/a	1.20	1.10	0.50	0.60	0.014	1.50	0.50	795.29
CI-151	Curb	10.00	n/a	1.81	2.00	0.74	2.00	0.014	1.50	0.50	793.64

Sag Inlets Computation Data.

Inlet ID	Inlet Type	Length (ft)	Grate Perim (ft)	Grate Area (sf)	Total Q (cfs)	Inlet Capacity (cfs)	Total Head (ft)	Ponded Width Left (ft)	Ponded Width Right (ft)
CI-150	Curb	10.00	n/a	n/a	2.645	10.327	0.202	13.27	10.00
CI-151	Curb	10.00	n/a	n/a	0.574	10.327	0.073	3.85	4.55

▲ ADDITIONAL Q IN PROPOSED NODE IS THE Q CALCULATED FOR A FUTURE DEVELOPED C VALUE OF 0.07 MINUS THE Q VALUE CALCULATED WITH THE UNDEVELOPED C VALUE OF 0.25

Cumulative Junction Discharge Computations

Node I.D.	Node Type	Weighted C-Value	Cumulat. Dr.Area (acres)	Cumulat. Tc (min)	Intens. (in/hr)	User Supply Q cfs)	Additional▲ Q in Node (cfs)	Total Disch. (cfs)
CI-150	Curb	0.850	0.39	10.00	7.98	0.000	0.11	2.755
CI-151	Curb	0.859	0.47	10.50	7.81	0.000	0.11	3.263
CI-155	Curb	0.000	0.00	0.00	0.00	0.000	0.00	0.000
OUT	Outlt	0.859	0.47	10.50	7.81	0.000	0.11	3.263

Conveyance Configuration Data

Run#	Node US	Node DS	Flowline Elev. US (ft)	Flowline Elev. DS (ft)	Shape #	Span (ft)	Rise (ft)	Length (ft)	Slope (%)	n_value
1	CI-150	CI-151	793.50	792.24	Circ 1	0.00	1.50	149.60	0.84	0.012
2	CI-151	OUT	792.24	791.50	Circ 1	0.00	1.50	87.74	0.84	0.012

Conveyance Hydraulic Computations. Tailwater = 0.000 (ft)

Run#	Hydraulic Gradeline US Elev (ft)	Hydraulic Gradeline DS Elev (ft)	Fr.Slope (%)	Depth Unif. (ft)	Depth Actual (ft)	Velocity Unif. (f/s)	Velocity Actual (f/s)	Q (cfs)	Cap (cfs)	Junc Loss (ft)
1*	794.03	792.81	0.059	0.53	0.57	4.97	4.43	2.75	10.45	0.000
2*	792.81	792.07	0.082	0.57	0.57	5.24	5.24	3.26	10.45	0.000

=END=

* Super critical flow.

TEXAS HYDRAULIC SYSTEM. CULVERT (ver. 1.0)
Tue Sep 21 15:29:48 2004

CULVERT HYDRAULIC COMPUTATIONS

CULVERT NAME: PROP CULV
PROJECT NAME: SH29 WEST
PROJECT CONTROL: CSJ:
COUNTY: WILLIAMSON
DESCRIPTION: PROP CULV

Input Units: English
Output Units: English

ANALYZE SINGLE OPENING CULVERT

MATERIAL: CONCRETE
SHAPE: CONCRETE BOX.
ENTRANCE: BEVEL TO SLOPE
PROFILE: BROKEN BACK CULVERT

FREQUENCY: 25 YEAR DISCHARGE: 144.00 cfs TAILWATER: 817.55 ft
FREQUENCY: 100 YEAR DISCHARGE: 181.00 cfs

TAILWATER ELEVATION (computed).

n value: 0.0120 Ke value: 0.2000

CULVERT RISE = 6.00 ft CULVERT SPAN = 5.00 ft BARRELS = 1

INLET station: 0.00 elevation: 812.35 ft
OUTLET station: 102.00 elevation: 811.55 ft

BROKEN BACK CULVERT CONFIGURATION

Unit	Slope	Length	UPSTREAM Sta.	UPSTREAM Elev.	DOWNSTREAM Sta.	DOWNSTREAM Elev.
1	0.00133	30.00	0.00	812.35	30.00	812.31
2	0.00015	65.00	30.00	812.31	95.00	812.30
3	0.10776	7.00	95.00	812.30	102.00	811.55

Cross section profile (XY Coordinates) ft

X	Y	X	Y	X	Y
0.00	815.06	10.00	814.06	20.00	817.26
30.00	811.72	40.00	811.70	50.00	811.68
60.00	811.70	70.00	812.13	80.00	811.94
90.00	812.13	100.00	812.86		

CULVERT OUTPUT RUN NO = 1

TAILWATER ELEVATION: 812.31 ft (computed).

ANALYSIS for discharge frequency of : 25 YEAR

Barls.	Qpb cfs	Rise ft	Span ft	Length ft	Max.HW elev ft	Calc.HW elev ft	HW ft	Control	Veloc. ft/s	Out.depth ft
1	144.00	6.00	5.00	102.00	0.00	816.05	3.70	Outlet	14.09	2.04

Inlet control depth = 4.50 ft
Outlet control depth = 3.70 ft

Normal depth = 0.92 ft Culvert slope = 0.00784
Critical depth = 2.95 ft Critical slope = 0.00414

CULVERT OUTPUT RUN NO = 2

TAILWATER ELEVATION: 812.38 ft (computed).

ANALYSIS for discharge frequency of : 100 YEAR

Barls.	Qpb cfs	Rise ft	Span ft	Length ft	Max.HW elev ft	Calc.HW elev ft	HW ft	Control	Veloc. ft/s	Out.depth ft
1	181.00	6.00	5.00	102.00	0.00	816.64	4.29	Outlet	14.83	2.44

Inlet control depth = 5.31 ft
Outlet control depth = 4.29 ft

Normal depth = 1.08 ft Culvert slope = 0.00784
Critical depth = 3.44 ft Critical slope = 0.00441

RUNING MESSAGES LIST:

*Computation: Hydraulic jump occurs within culvert.

NORMAL TERMINATION OF THYSYS. CULVERT.

STATE OF TEXAS
JAMES J. ROOHMS
83383
LICENSED PROFESSIONAL ENGINEER
8/22/2004

NO.	REVISION	BY	DATE

CP&Y Chiang, Patel & Yerby, Inc.

© 2004 Texas Department of Transportation

SH 29
WINSTORM COMPUTATIONS
SYSTEM E
CULVERT COMPUTATIONS

		FED. ROAD DIV. NO.	STATE	FEDERAL AID PROJECT NO.		SHEET NO.
Designed:	KGM	6	TEXAS	CC 337-1-29		10
Checked:	JJR	STATE DIST. NO.	COUNTY	CONTROL NO.	SECTION NO.	JOB NO.	HIGHWAY NO.
Drawn:	KGM	14	WILLIAMSON	0337	01	029	SH 29
Checked:	JJR						

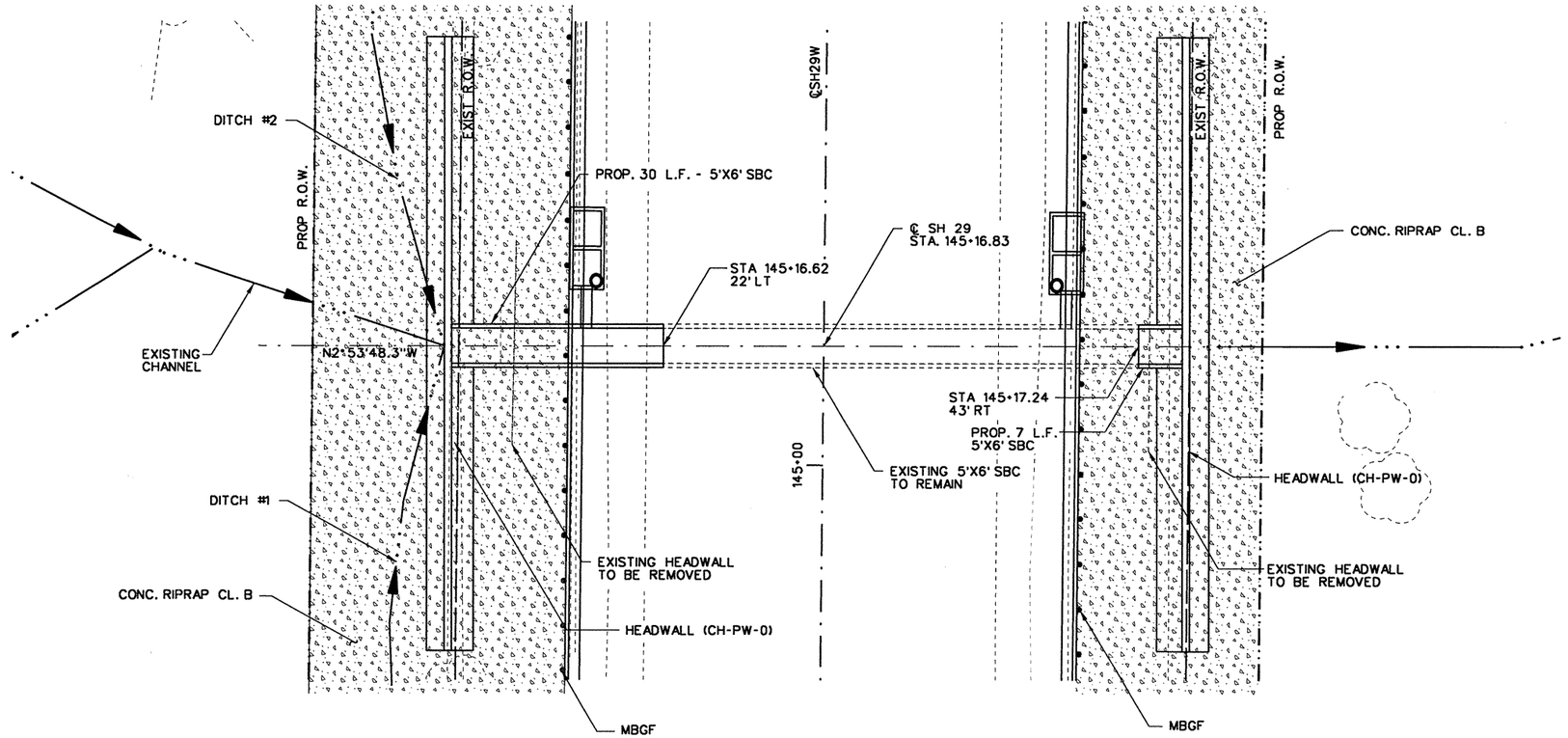

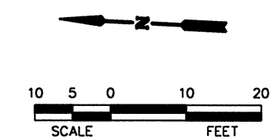

NOTES:

1. EXISTING CULVERT SHALL BE BROKEN BACK AND EXPOSED TO THE LIMITS SHOWN IN THE PLANS.

2. SEE EROSION CONTROL PLANS FOR RIPRAP LIMITS AND QUANTITIES.

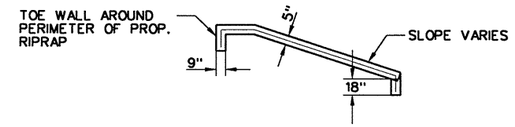

TYPICAL CONCRETE RIPRAP DIMENSION DETAIL
NTS

25 YR. STORM	100 YR. STORM
Q_{25} = 144.00 CFS	Q_{100} = 181.00 CFS
V_{25} = 14.09 FT/S	V_{100} = 14.83 FT/S

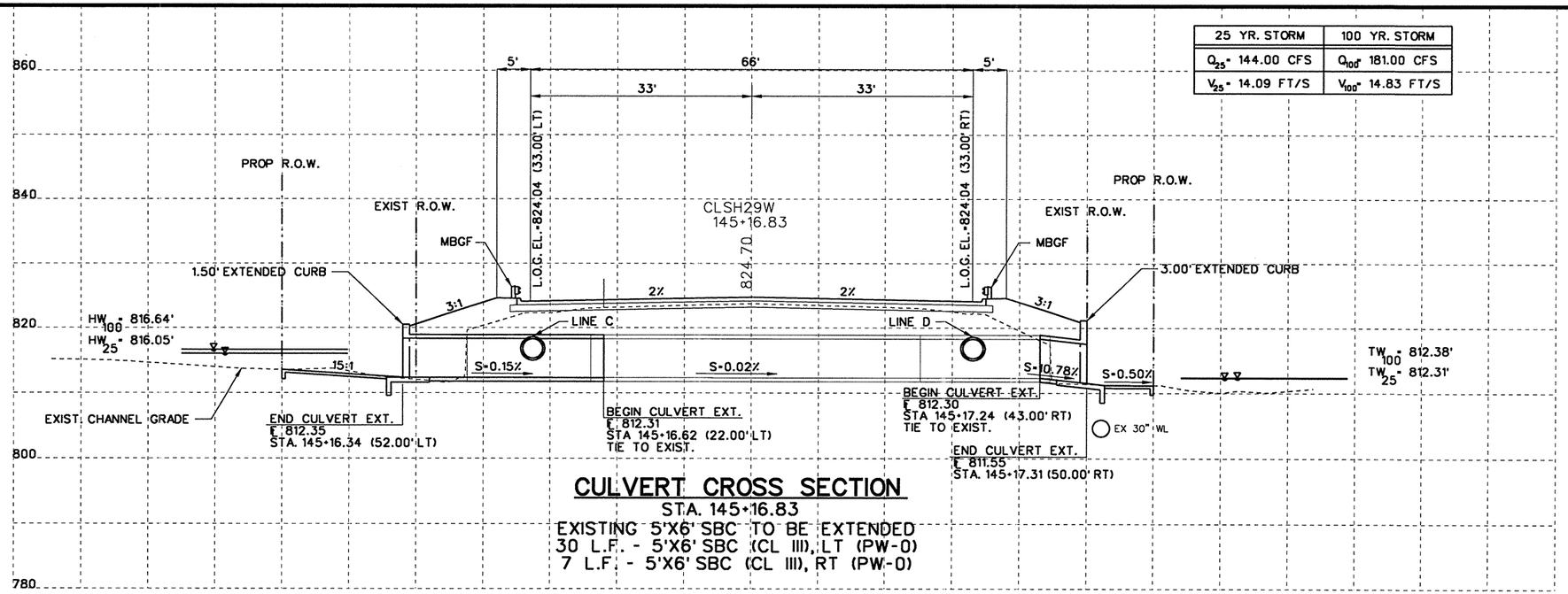

CULVERT CROSS SECTION

STA. 145+16.83
EXISTING 5'X6' SBC TO BE EXTENDED
30 L.F. - 5'X6' SBC (CL III), LT (PW-0)
7 L.F. - 5'X6' SBC (CL III), RT (PW-0)

STATE OF TEXAS
JAMES J. ROOHMS
83383
LICENSED
PROFESSIONAL ENGINEER
9/22/2004

NO.	REVISION	BY	DATE

CP&Y Chiang, Patel & Yerby, Inc.

© 2004

Texas Department of Transportation

SH 29

CULVERT NO. 1 LAYOUT
STA. 145+16.83

		FED. ROAD DIV. NO.	STATE	FEDERAL AID PROJECT NO.				SHEET NO.
Designed:	JWP	6	TEXAS	CC 337-1-29				102
Checked:	JJR	STATE DIST. NO.	COUNTY	CONTROL NO.	SECTION NO.	JOB NO.	HIGHWAY NO.	
Drawn:	KGM	14	WILLIAMSON	0337	01	029	SH 29	
Checked:	JJR							

1 OF 1

...\wa3\west\common\533wd101.020 09/21/2004 04:57:33 PM

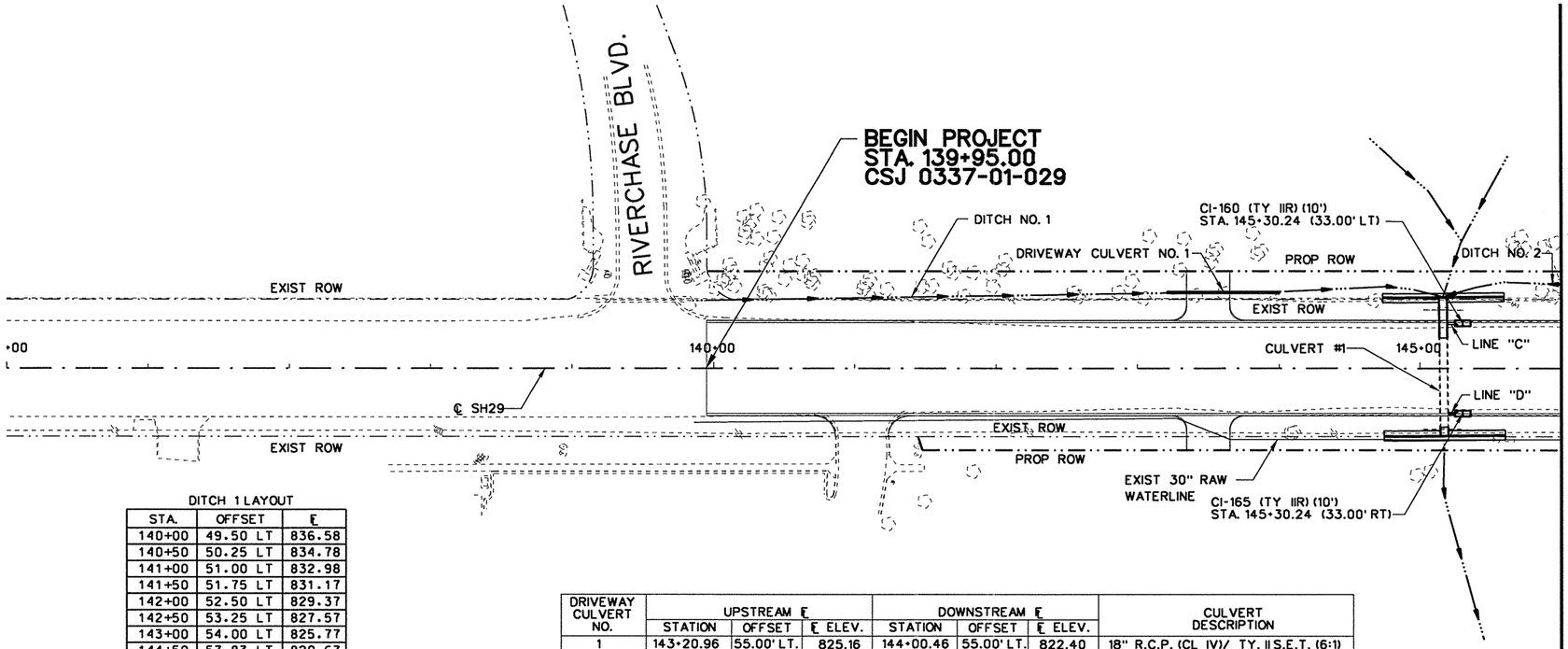

DITCH 1 LAYOUT

STA.	OFFSET	℄
140+00	49.50 LT	836.58
140+50	50.25 LT	834.78
141+00	51.00 LT	832.98
141+50	51.75 LT	831.17
142+00	52.50 LT	829.37
142+50	53.25 LT	827.57
143+00	54.00 LT	825.77
144+50	57.83 LT	820.67
145+00	55.87 LT	814.78

DRIVEWAY CULVERT NO.	UPSTREAM ℄			DOWNSTREAM ℄			CULVERT DESCRIPTION
	STATION	OFFSET	℄ ELEV.	STATION	OFFSET	℄ ELEV.	
1	143+20.96	55.00' LT.	825.16	144+00.46	55.00' LT.	822.40	18" R.C.P. (CL IV)/ TY. II S.E.T. (6:1)

N

50 25 0 50 100

SCALE FEET

NOTES:

1. THE UTILITY INFORMATION SHOWN IS PROVIDED BY OTHERS AND IS REPRESENTED AT THE REQUEST OF THE TEXAS DEPARTMENT OF TRANSPORTATION. THIS INFORMATION WAS OBTAINED SOLELY FOR THE USE OF THE ENGINEER IN DESIGN OF THE PROJECT. THE ACCURACY AND SUFFICIENCY OF THE INFORMATION SHOWN IS NOT GUARANTEED. THE CONTRACTOR SHALL MAKE HIS OWN DETERMINATIONS AS TO ALL UTILITY LIMITS AND LOCATIONS PRIOR TO CONSTRUCTION.

2. OFFSETS TO CURB INLETS ARE TO CENTER OF INLET AT THE LIP OF GUTTER. OFFSETS TO DROP INLETS AND MANHOLES ARE TO THE CENTER OF THE STRUCTURE.

3. CURB INLET ELEVATION GIVEN IN PROFILE IS AT LIP OF GUTTER.

4. STATIONING BASED ON ℄ S.H. 29 ALIGNMENT UNLESS OTHERWISE NOTED.

5. SEE EROSION CONTROL PLANS FOR CONCRETE RIPRAP LIMITS.

NO PROFILE THIS SHEET

STATE OF TEXAS
JAMES J. ROOHMS
83383
LICENSED
PROFESSIONAL ENGINEER
9/22/2004

NO.	REVISION	BY	DATE

CP&Y Chiang, Patel & Yerby, Inc.

© 2004

Texas Department of Transportation

SH 29

DRAINAGE PLAN & PROFILE

BEGIN PROJECT TO STA. 146+00

		FED. ROAD DIV. NO.	STATE	FEDERAL AID PROJECT NO.			SHEET NO.
Designed:	KGM	6	TEXAS	CC 337-1-29			103
Checked:	JJR	STATE DIST. NO.	COUNTY	CONTROL NO.	SECTION NO.	JOB NO.	HIGHWAY NO.
Drawn:	KGM	14	WILLIAMSON	0337	01	029	SH 29
Checked:	JJR						

...\wa3\west\common\533wdp01.100 09/21/2004 04:28:39 PM

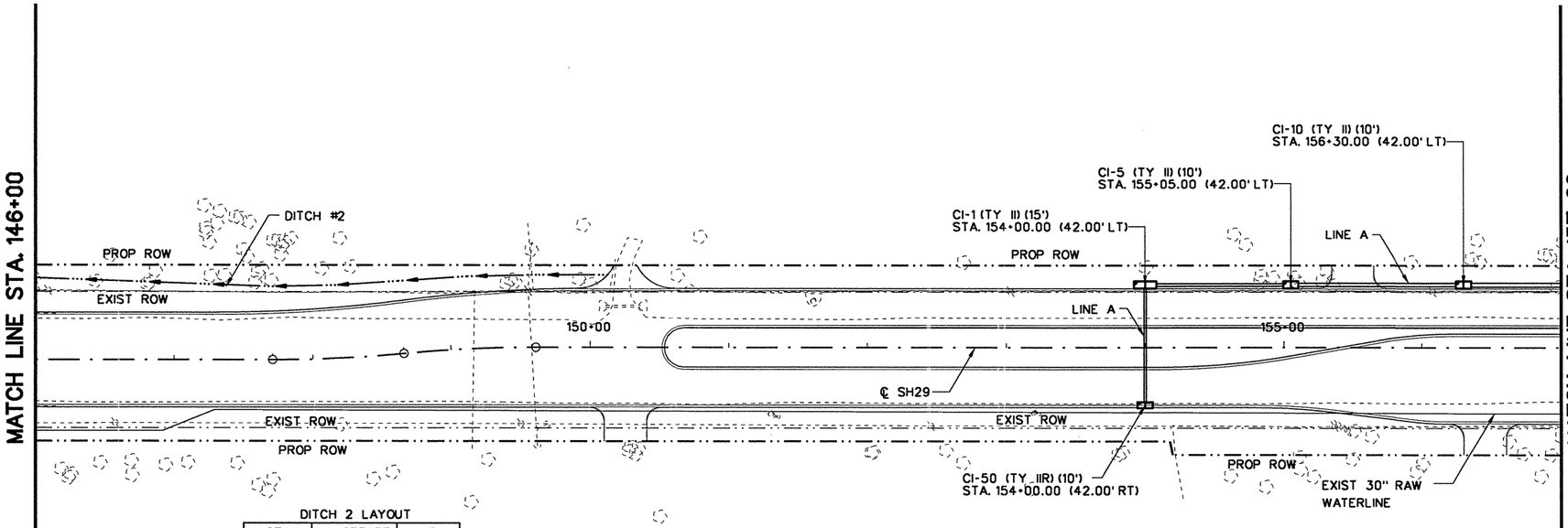

DITCH 2 LAYOUT

STA.	OFFSET	℄
145+50	60.57 LT	814.44
146+00	60.79 LT	818.17
146+50	58.80 LT	821.71
147+00	56.82 LT	824.64
147+50	54.84 LT	826.44
148+00	54.25 LT	828.25
148+50	54.24 LT	830.02
149+00	53.76 LT	831.77
149+50	53.79 LT	833.15

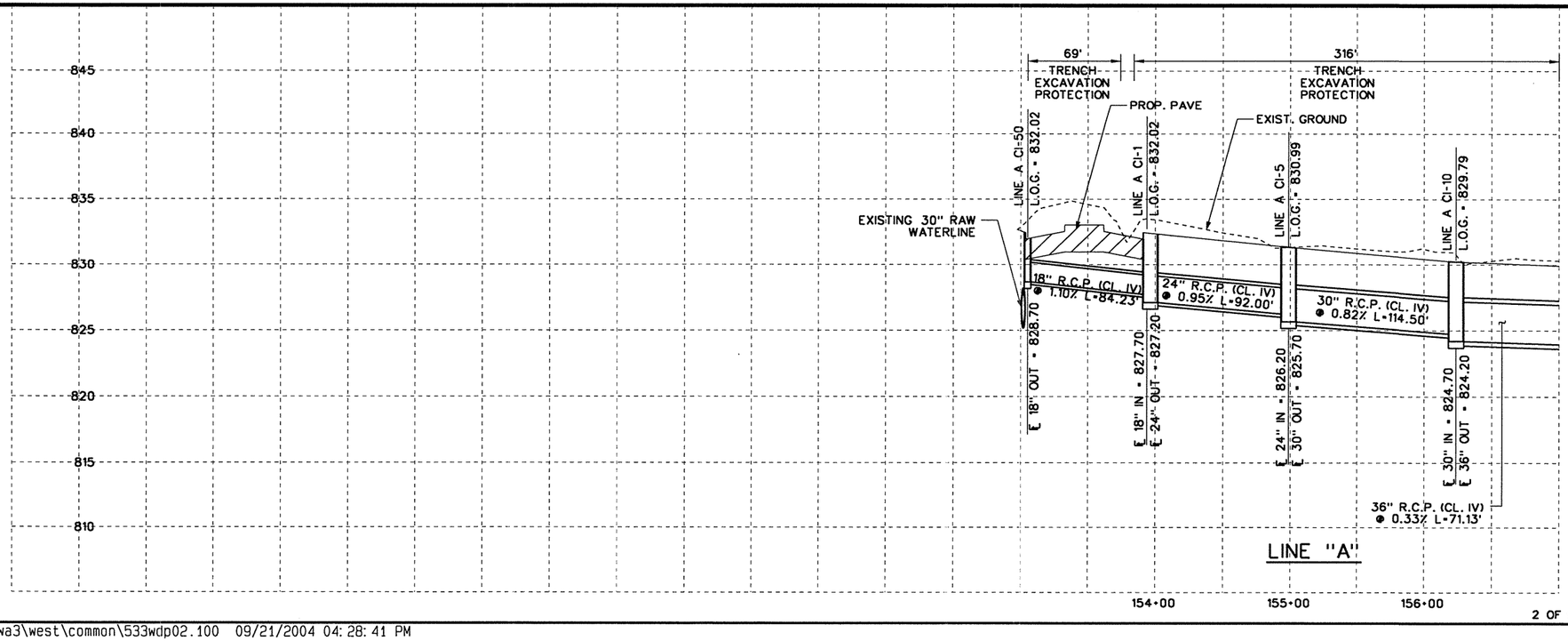

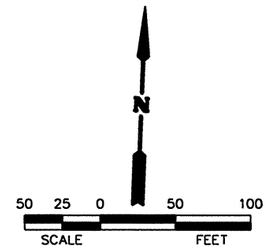

NOTES:

SEE SHEET 1 OF 9

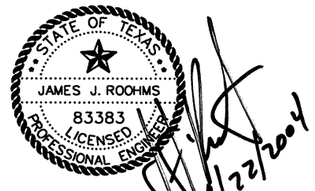

NO.	REVISION	BY	DATE

CP&Y Chiang, Patel & Yerby, Inc.

© 2004

Texas Department of Transportation

SH 29

DRAINAGE PLAN & PROFILE

STA. 146+00 TO STA. 157+00

		FED. ROAD DIV. NO.	STATE	FEDERAL AID PROJECT NO.			SHEET NO.
Designed:	KGM	6	TEXAS	CC 337-1-29			104
Checked:	JJR	STATE DIST. NO.	COUNTY	CONTROL NO.	SECTION NO.	JOB NO.	HIGHWAY NO.
Drawn:	KGM	14	WILLIAMSON	0337	01	029	SH 29
Checked:	JJR						

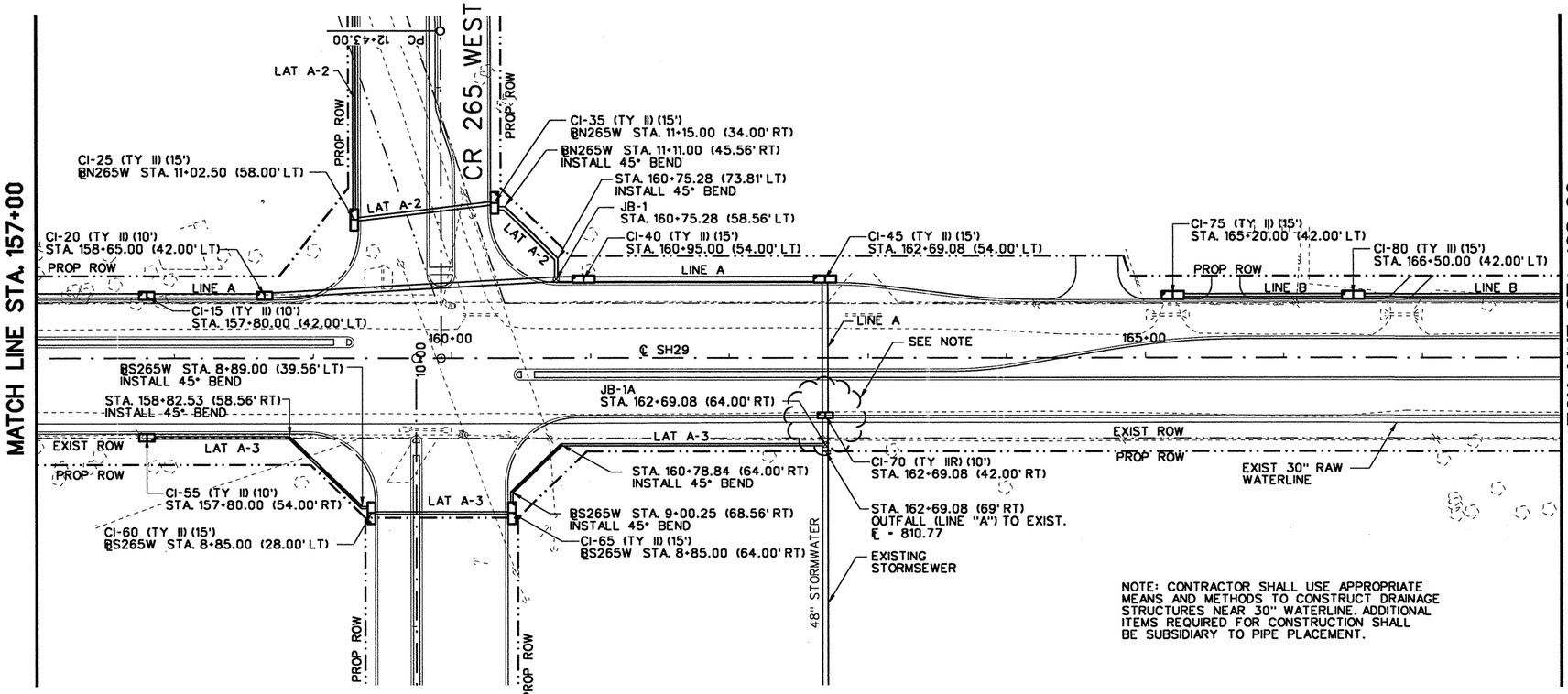

NOTE: CONTRACTOR SHALL USE APPROPRIATE MEANS AND METHODS TO CONSTRUCT DRAINAGE STRUCTURES NEAR 30" WATERLINE. ADDITIONAL ITEMS REQUIRED FOR CONSTRUCTION SHALL BE SUBSIDIARY TO PIPE PLACEMENT.

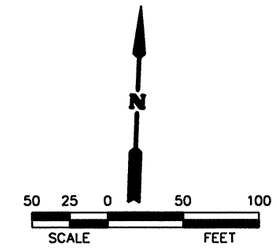

NOTES:

SEE SHEET 1 OF 9

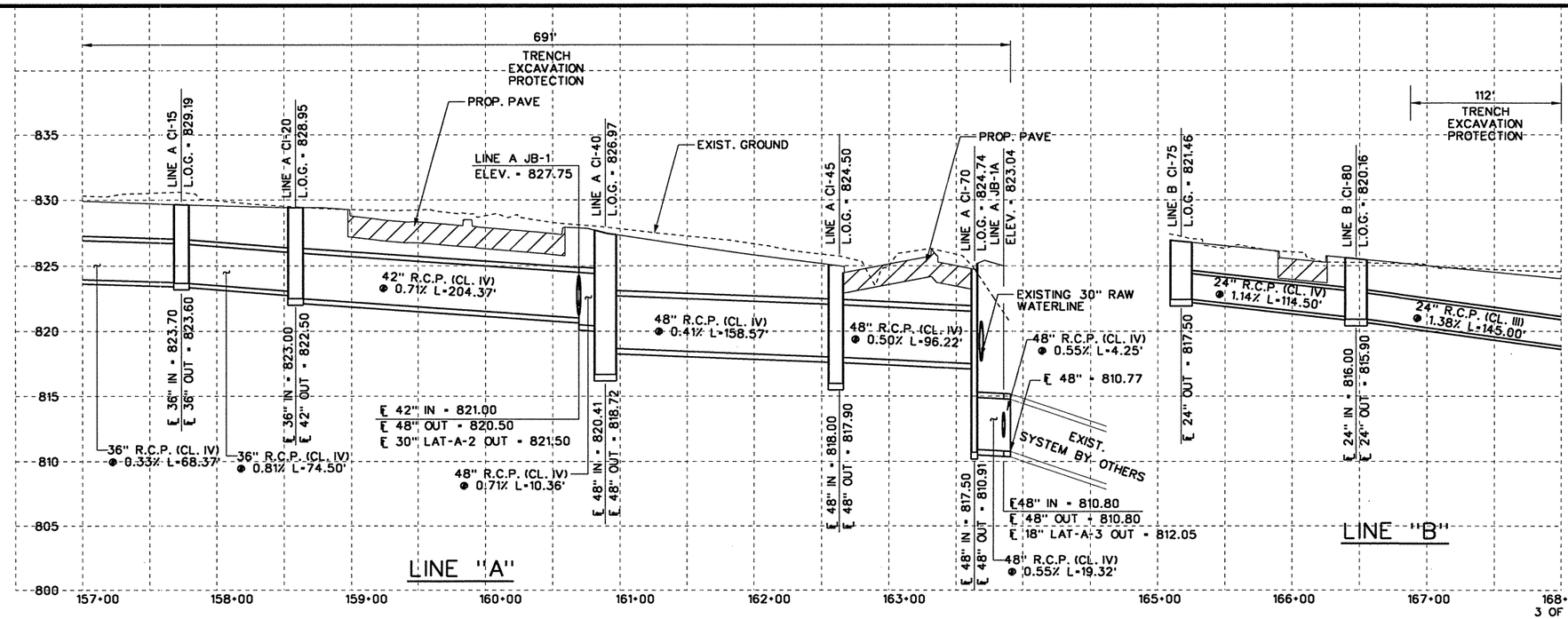

STATE OF TEXAS
JAMES J. ROOHMS
83383
LICENSED
PROFESSIONAL ENGINEER
10/07/2004

NO.	REVISION	BY	DATE

CP&Y Chiang, Patel & Yerby, Inc.

© 2004

Texas Department of Transportation

SH 29

DRAINAGE PLAN & PROFILE

STA. 157+00 TO STA. 168+00

		FED. ROAD DIV. NO.	STATE	FEDERAL AID PROJECT NO.			SHEET NO.
Designed:	KGM	6	TEXAS	CC 337-1-29			105
Checked:	JJR	STATE DIST. NO.	COUNTY	CONTROL NO.	SECTION NO.	JOB NO.	HIGHWAY NO.
Drawn:	KGM	14	WILLIAMSON	0337	01	029	SH 29
Checked:	JJR						

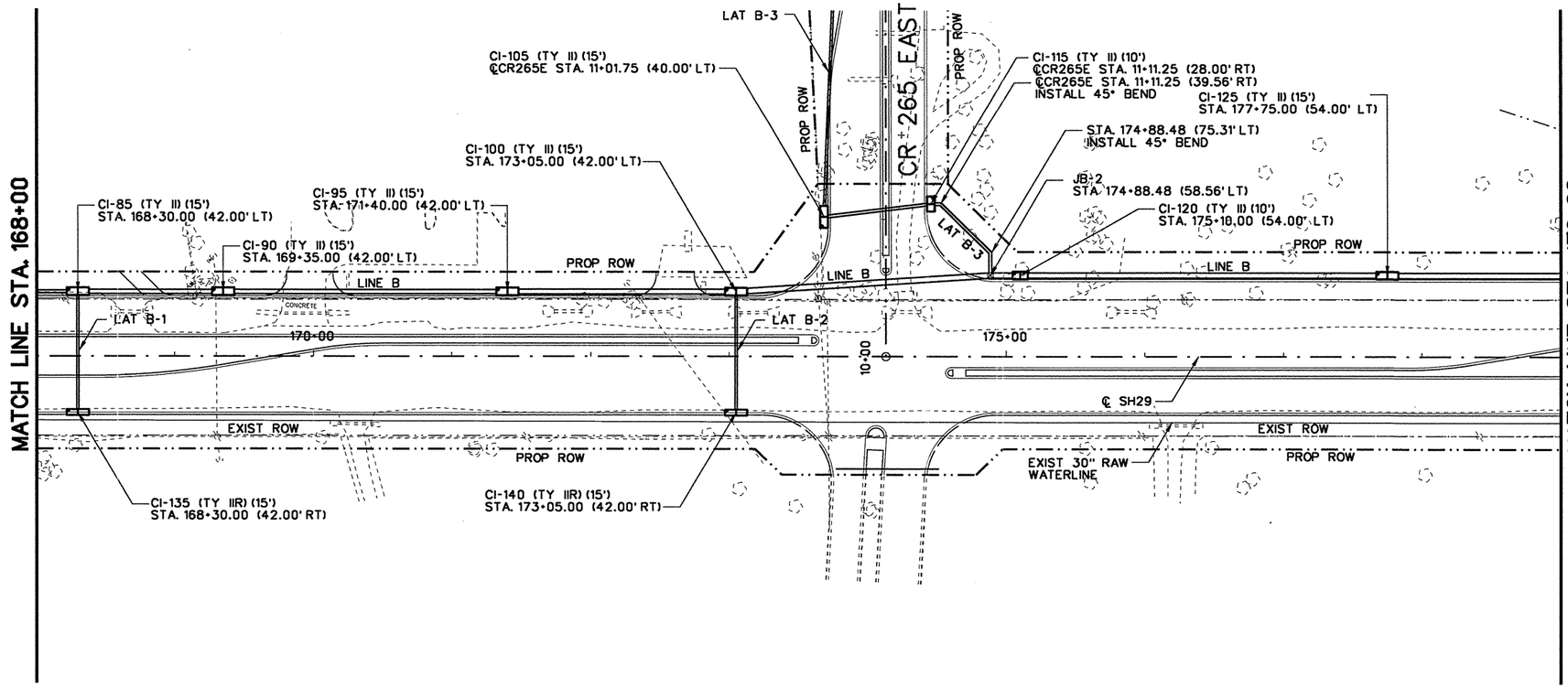

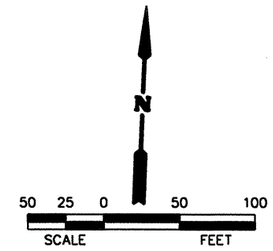

NOTES:

SEE SHEET 1 OF 9

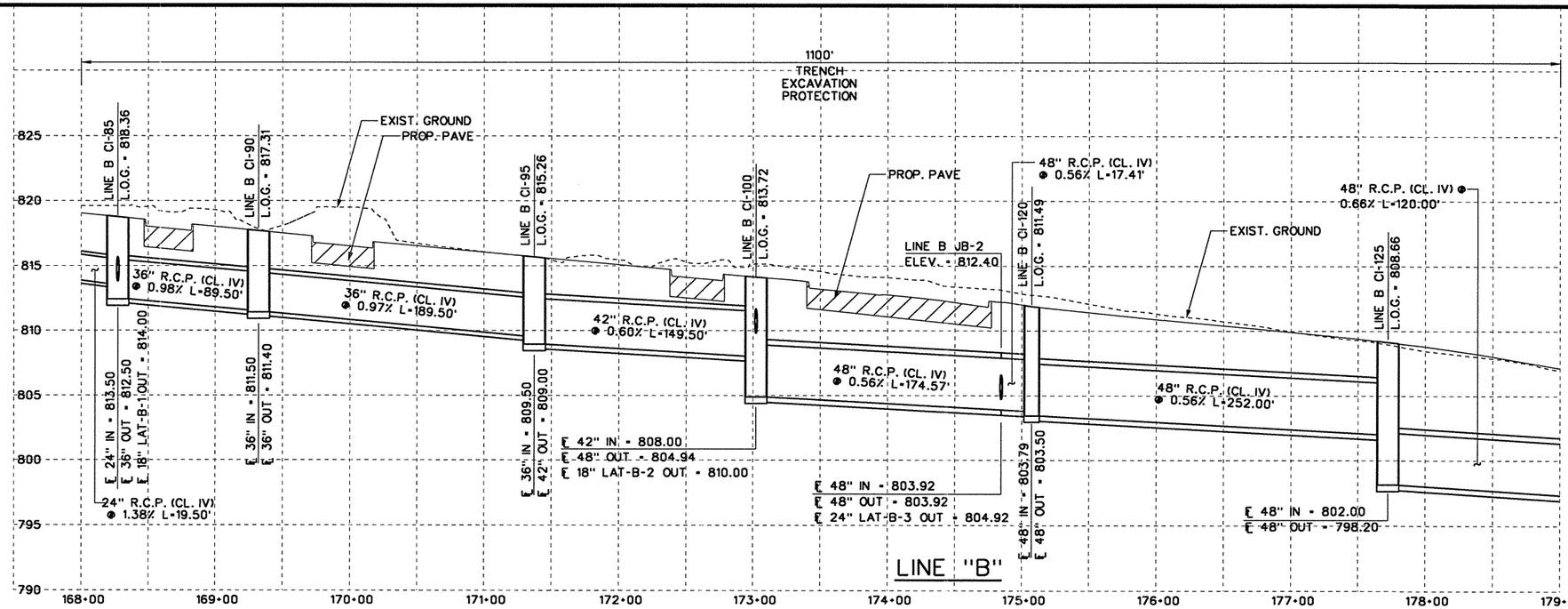

LINE "B"

4 OF 9

STATE OF TEXAS
JAMES J. ROOHMS
83383
LICENSED
PROFESSIONAL ENGINEER
10/07/2004

NO.	REVISION	BY	DATE

CP&Y Chiang, Patel & Yerby, Inc.

© 2004

Texas Department of Transportation

SH 29

DRAINAGE PLAN & PROFILE

STA. 168+00 TO STA. 179+00

		FED. ROAD DIV. NO.	STATE	FEDERAL AID PROJECT NO.			SHEET NO.
Designed:	KGM	6	TEXAS	CC 337-1-29			106
Checked:	JJR	STATE DIST. NO.	COUNTY	CONTROL NO.	SECTION NO.	JOB NO.	HIGHWAY NO.
Drawn:	KGM	14	WILLIAMSON	0337	01	029	SH 29
Checked:	JJR						

...\wa3\west\common\533wdp04.100 10/6/2004 1:10:11 PM

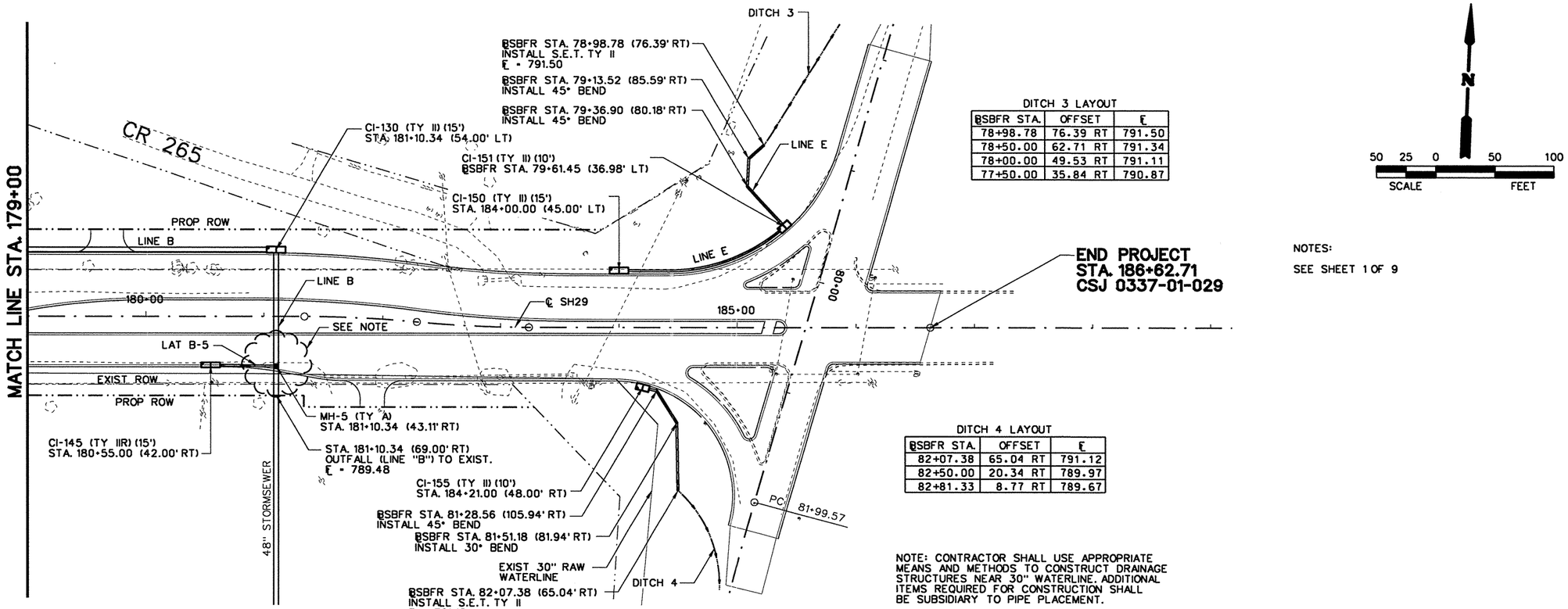

DITCH 3 LAYOUT

BSBFR STA.	OFFSET	℄
78+98.78	76.39 RT	791.50
78+50.00	62.71 RT	791.34
78+00.00	49.53 RT	791.11
77+50.00	35.84 RT	790.87

DITCH 4 LAYOUT

BSBFR STA.	OFFSET	℄
82+07.38	65.04 RT	791.12
82+50.00	20.34 RT	789.97
82+81.33	8.77 RT	789.67

NOTE: CONTRACTOR SHALL USE APPROPRIATE MEANS AND METHODS TO CONSTRUCT DRAINAGE STRUCTURES NEAR 30" WATERLINE. ADDITIONAL ITEMS REQUIRED FOR CONSTRUCTION SHALL BE SUBSIDIARY TO PIPE PLACEMENT.

N

50 25 0 50 100
SCALE FEET

NOTES:

SEE SHEET 1 OF 9

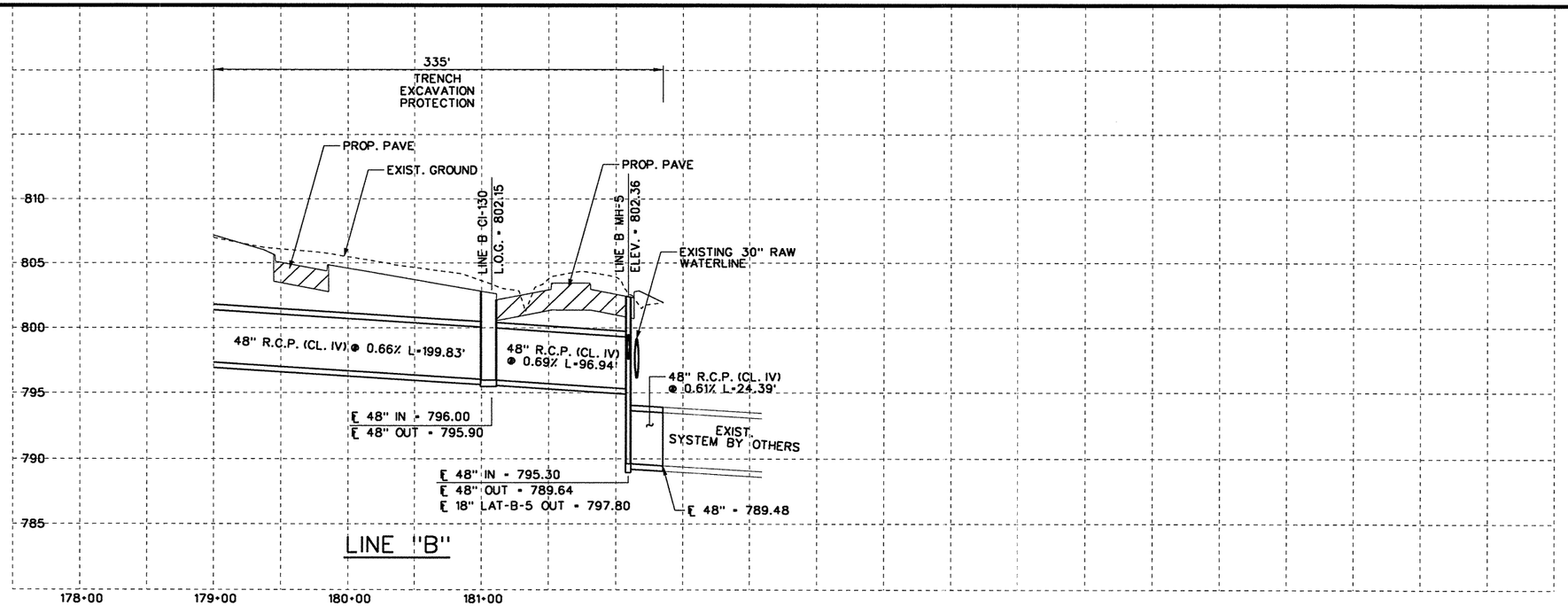

LINE "B"

STATE OF TEXAS
JAMES J. ROCHMS
83383
LICENSED
PROFESSIONAL ENGINEER
9/22/2004

NO.	REVISION	BY	DATE

CP&Y Chiang, Patel & Yerby, Inc.

© 2004

Texas Department of Transportation

SH 29

DRAINAGE PLAN & PROFILE
STA. 179+00 TO END PROJECT

		FED. ROAD DIV. NO.	STATE	FEDERAL AID PROJECT NO.			SHEET NO.
Designed:	KGM	6	TEXAS	CC 337-1-29			07
Checked:	JJR	STATE DIST. NO.	COUNTY	CONTROL NO.	SECTION NO.	JOB NO.	HIGHWAY NO.
Drawn:	KGM	14	WILLIAMSON	0337	01	029	SH 29
Checked:	JJR						

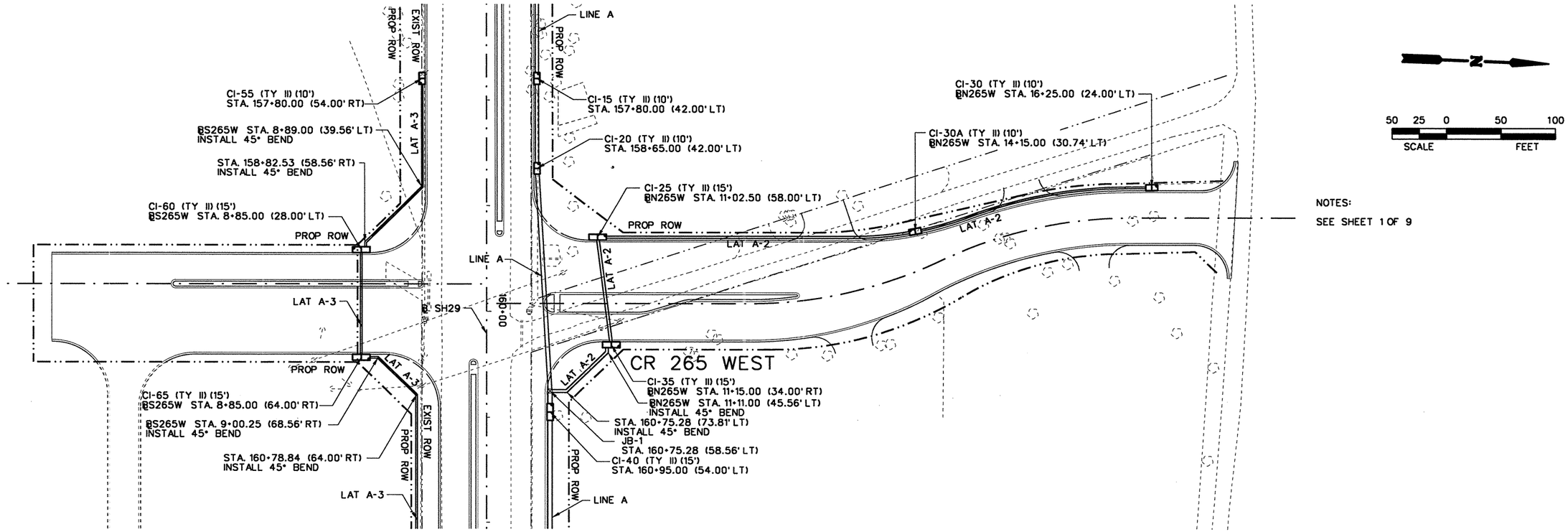

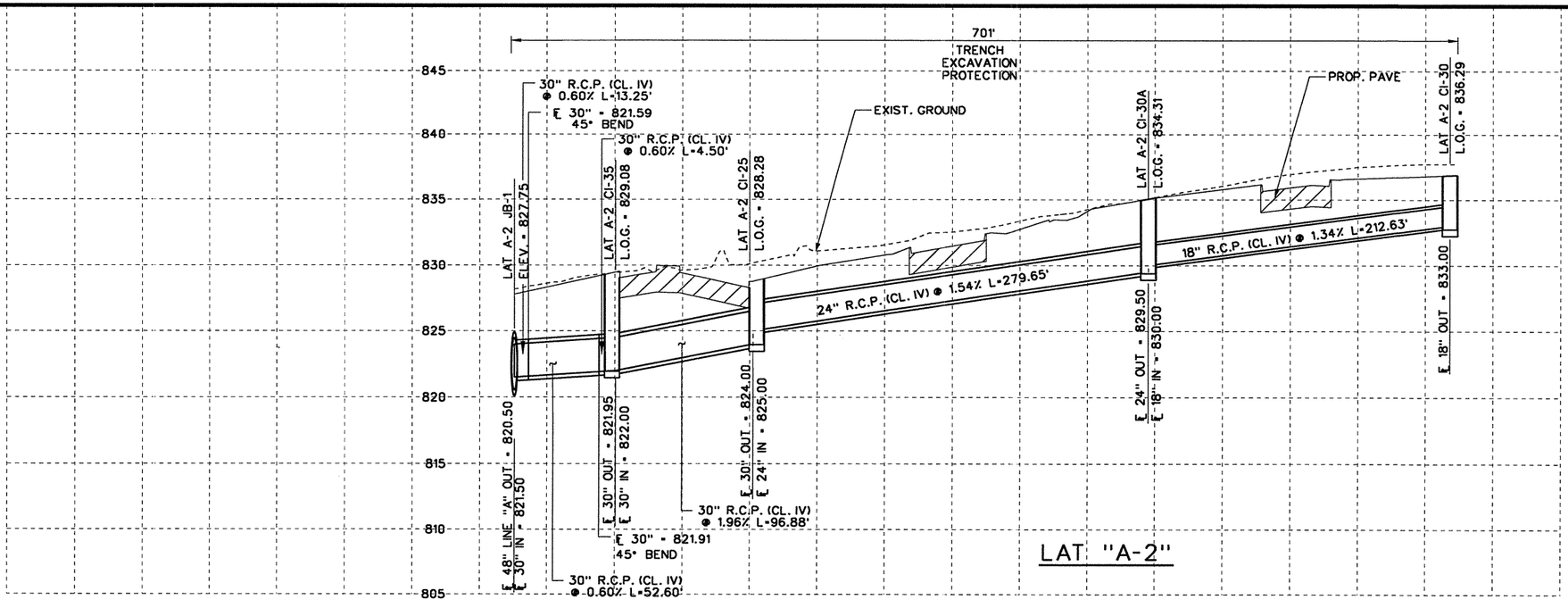

LAT "A-2"

STATE OF TEXAS
JAMES J. ROOHMS
83383
LICENSED PROFESSIONAL ENGINEER
10/07/2004

NO.	REVISION	BY	DATE

CP&Y Chiang, Patel & Yerby, Inc.

© 2004 Texas Department of Transportation

SH 29

DRAINAGE PLAN & PROFILE
CR 265 WEST

		FED. ROAD DIV. NO.	STATE	FEDERAL AID PROJECT NO.				SHEET NO.
Designed:	KGM	6	TEXAS	CC 337-1-29				108
Checked:	JJR	STATE DIST. NO.	COUNTY	CONTROL NO.	SECTION NO.	JOB NO.		HIGHWAY NO.
Drawn:	KGM	14	WILLIAMSON	0337	01	029		SH 29
Checked:	JJR							

...\wa3\west\common\533wdpiw01.100 10/6/2004 1:10:17 PM

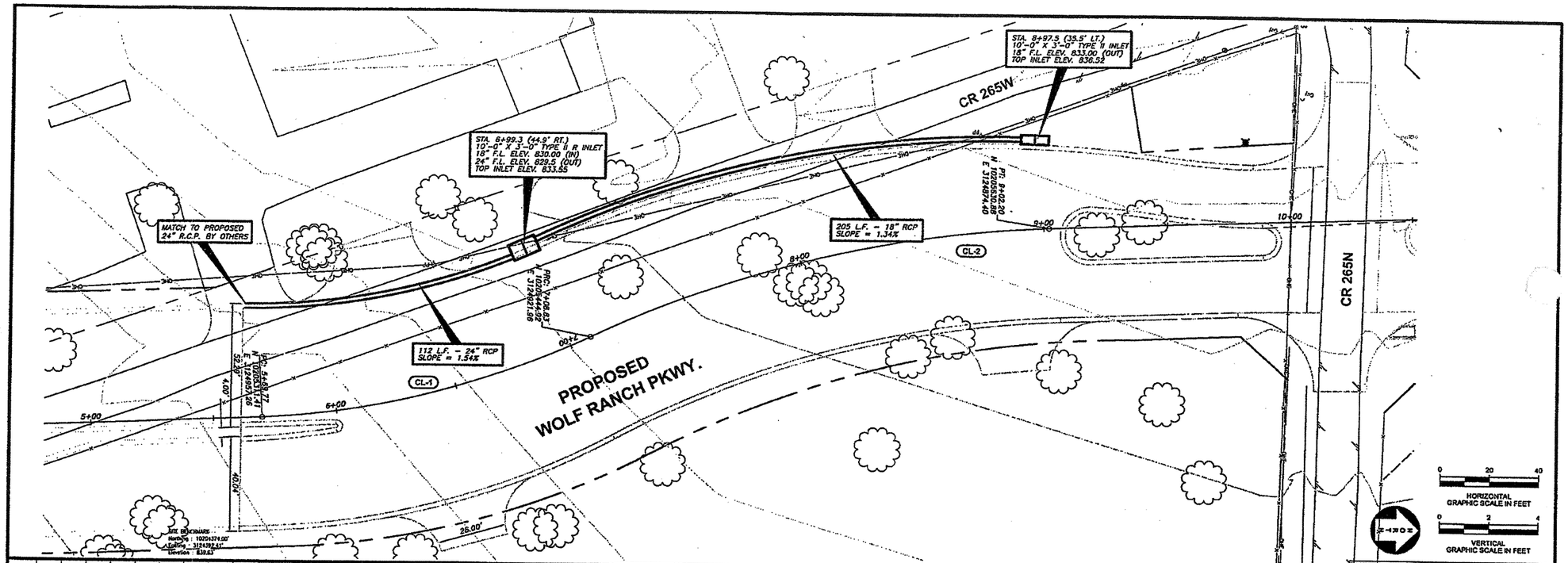

SHEET 9 OF 11

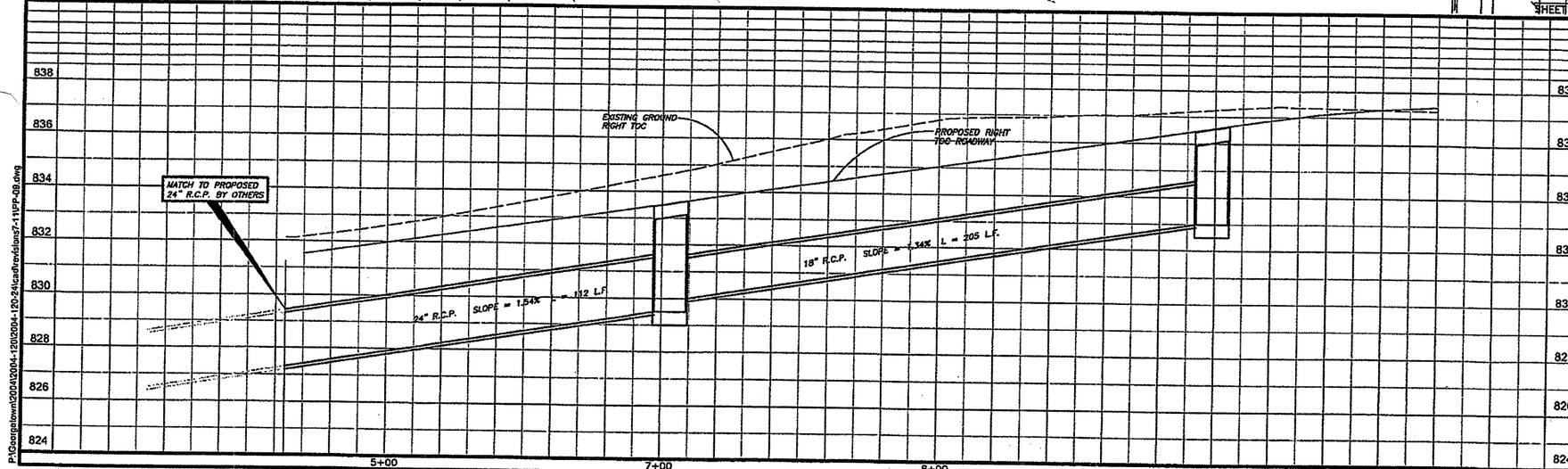

NOTE: SEE SHEET NO. 06
FOR CURVE DATA.

STATE OF TEXAS
R. DAVID PATRICK
82738
REGISTERED
PROFESSIONAL ENGINEER

Texas Department of Transportation
Traffic Operations Division

KASBERG, PATRICK & ASSOCIATES, L.L.P.
CONSULTING ENGINEERS
TEMPLE, TEXAS 76501

FED.RD. DIV.NO.	AID PROJECT NO.	SHEET NO.
6	CC-337-1-29	108A

STATE	DIST.	COUNTY	
TEXAS	14	WILLIAMSON	
CONT.	SECT.	JOB	HIGHWAY NO.
337	1	29	CR265 - SH29

P:\Georgetown\2004\2004-120\2004-120-24\cad\revisions7-11\PP-09.dwg

C.O.#6

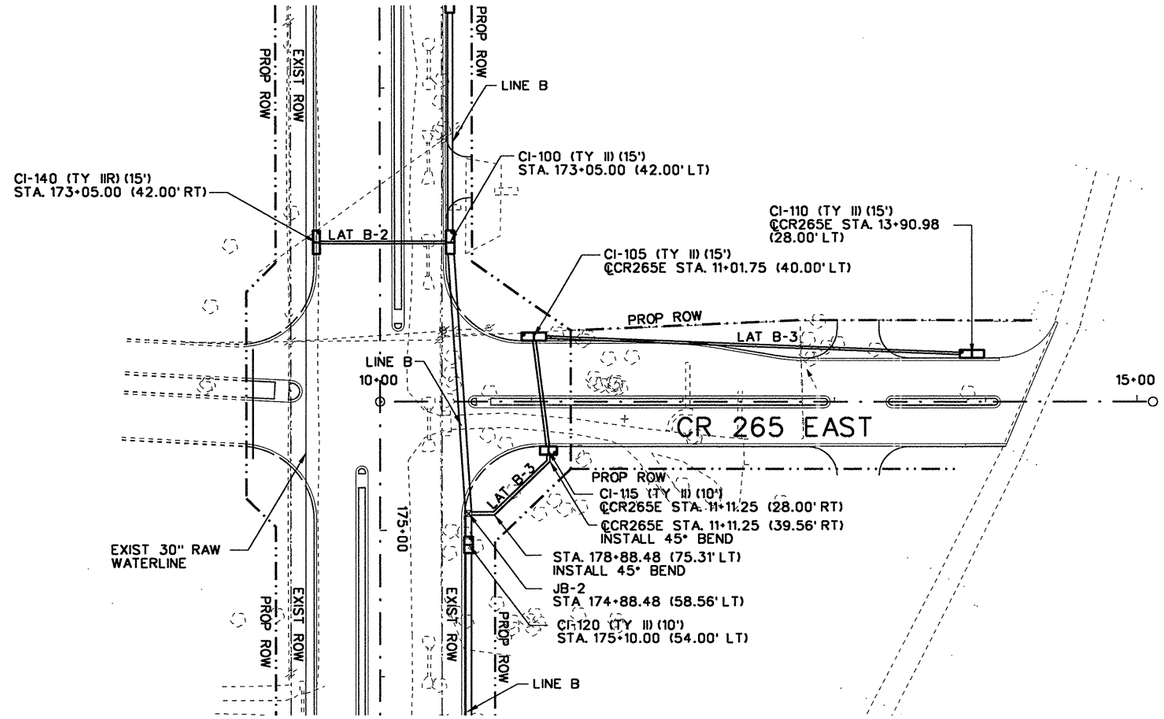

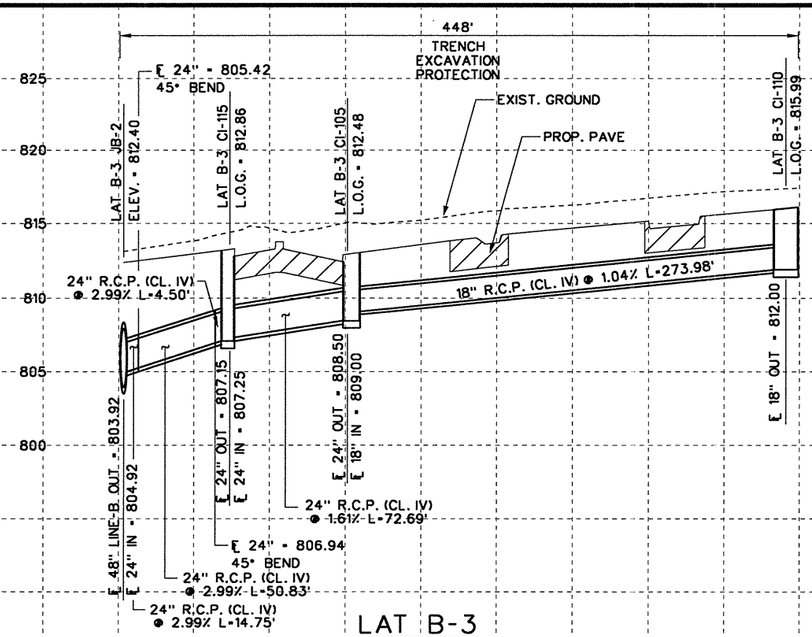

LAT B-3

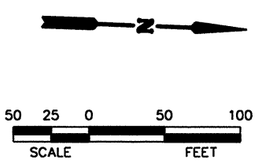

NOTES:

SEE SHEET 1 OF 9

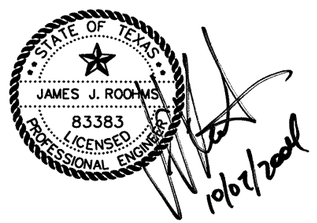

NO.	REVISION	BY	DATE

CP&Y Chiang, Patel & Yerby, Inc.

© 2004

Texas Department of Transportation

SH 29

DRAINAGE PLAN & PROFILE
CR 265 EAST

		FED. ROAD DIV. NO.	STATE	FEDERAL AID PROJECT NO.			SHEET NO.
Designed:	KGM	6	TEXAS	CC 337-1-29			109
Checked:	JJR	STATE DIST. NO.	COUNTY	CONTROL NO.	SECTION NO.	JOB NO.	HIGHWAY NO.
Drawn:	KGM	14	WILLIAMSON	0337	01	029	SH 29
Checked:	JJR						

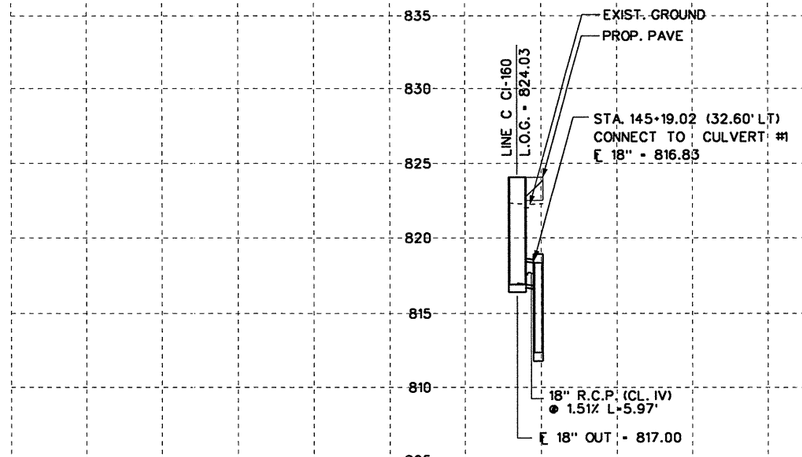

LINE "C"

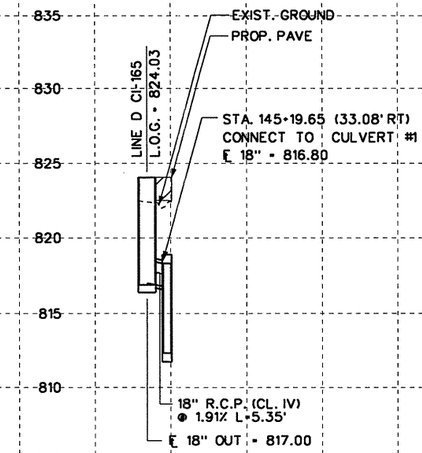

LINE "D"

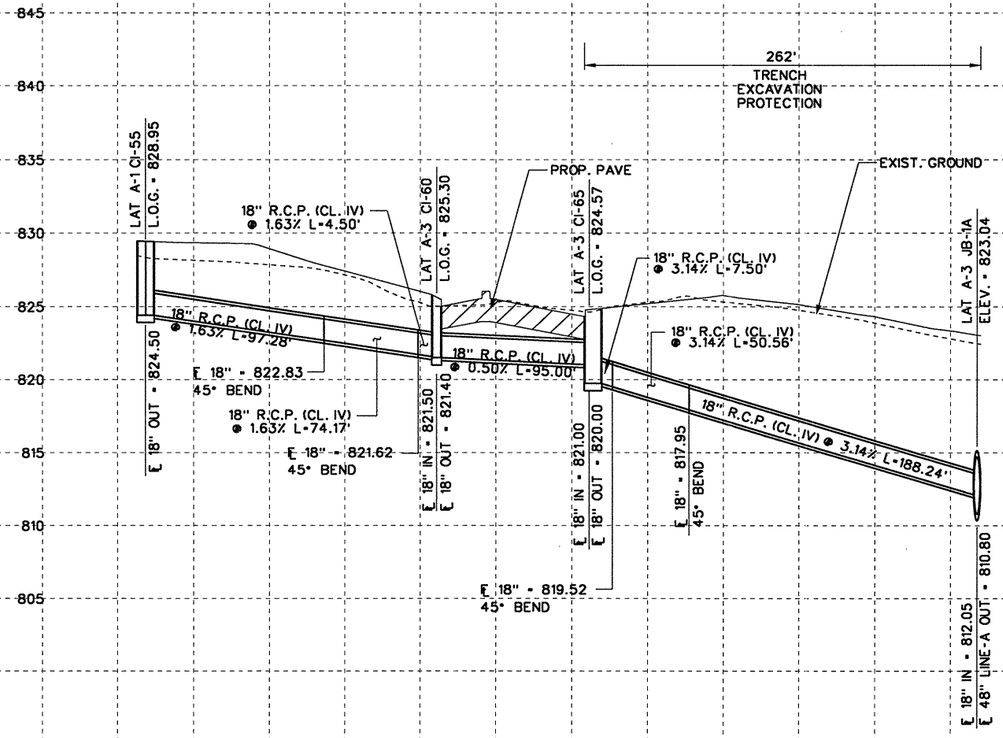

LAT A-3

50 25 0 50 100
SCALE FEET

NOTES:

SEE SHEET 1 OF 9

STATE OF TEXAS
JAMES J. ROOHMS
83383
LICENSED
PROFESSIONAL ENGINEER
10/07/2004

NO.	REVISION	BY	DATE

CP&Y Chiang, Patel & Yerby, Inc.

© 2004

Texas Department of Transportation

SH 29

LATERAL PROFILES

Designed:	KGM	FED. ROAD DIV. NO.	STATE	FEDERAL AID PROJECT NO.				SHEET NO.
Checked:	JJR	6	TEXAS	CC 337-1-29				110
Drawn:	KGM	STATE DIST. NO.	COUNTY		CONTROL NO.	SECTION NO.	JOB NO.	HIGHWAY NO.
Checked:	JJR	14	WILLIAMSON		0337	01	029	SH 29

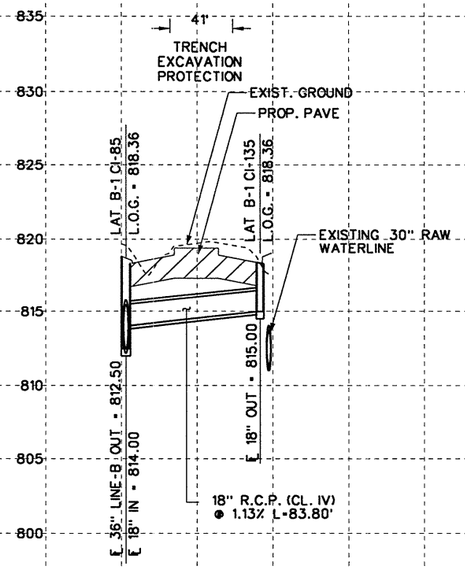

LAT B-1 (STA. 168+30.00)

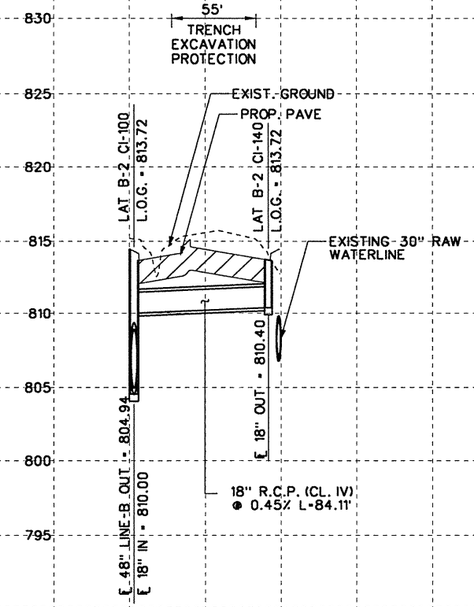

LAT B-2 (STA. 173+05.00)

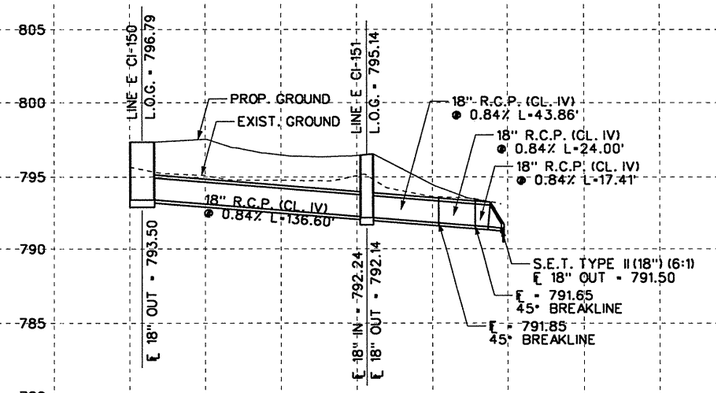

LINE "E"

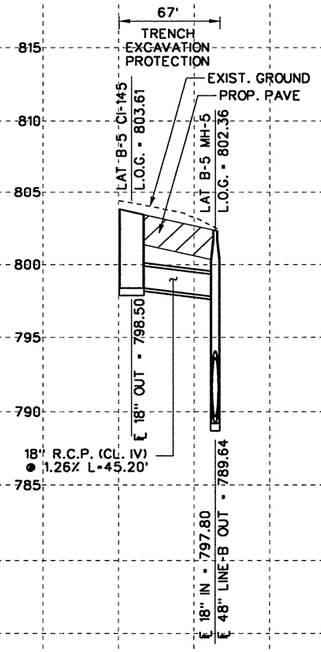

LAT B-5

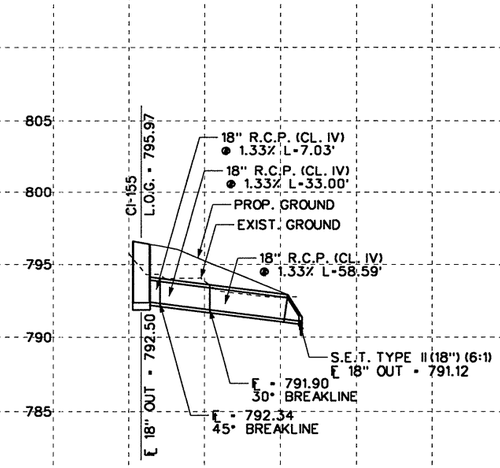

CI-155

50 25 0 50 100
SCALE FEET

NOTES:

SEE SHEET 1 OF 9

STATE OF TEXAS
JAMES J. ROOHMS
83383
LICENSED
PROFESSIONAL ENGINEER
9/22/04

NO.	REVISION	BY	DATE

CP&Y Chiang, Patel & Yerby, Inc.

© 2004

Texas Department of Transportation

SH 29

LATERAL PROFILES

		FED. ROAD DIV. NO.	STATE	FEDERAL AID PROJECT NO.				SHEET NO.
Designed:	KGM	6	TEXAS	CC 337-1-29				
Checked:	JJR							
Drawn:	KGM	STATE DIST. NO.	COUNTY	CONTROL NO.	SECTION NO.	JOB NO.	HIGHWAY NO.	
Checked:	JJR	14	WILLIAMSON	0337	01	029	SH 29	

Culvert Station and/or Creek name followed by applicable end (Lt, Rt or Both)	Description of Box Culvert No. Spans ~ Span X Height	Max Fill Height (Ft)	Applicable Box Culvert Standard	Applicable Wingwall or End Treatment Standard	Skew Angle (0°,15°, 30° or 45°)	Side Slope or Channel Slope Ratio (SL:1)	T Culvert Top Slab Thickness (In)	U Culvert Wall Thickness (In)	C Estimated Curb Height (Ft)	(1) Hw Height of Wingwall (Ft)	A Curb to End of Wingwall (Ft)	B Offset of End of Wingwall (Ft)	Lw Length of Longest Wingwall (Ft)	Ltw Culvert Toewall Length (Ft)	Atw Anchor Toewall Length (Ft)	Riprap Apron (C.Y.)	(2) Class "C" Conc (Curb) (C.Y.)	(3) Class "C" Conc (Wingwall) (C.Y.)	Total Wingwall Area (S.F.)
Culvert #1 STA 145+16.83 (LT)	1 ~ 6' x 6'	6'	SCC - 5 & 6	PW	0°	3:1	7"	7"	1.5'	8.083'	N/A	N/A	40'	6.167'	N/A	0.0	0.34	44.04	647
Culvert #1 STA 145+16.83 (RT)	1 ~ 6' x 6'	6'	SCC - 5 & 6	PW	0°	3:1	7"	7"	3.0'	9.583'	N/A	N/A	40'	6.167'	N/A	0.0	0.69	54.33	767

NOTES:
Skew Angle = 0° for SW-0, FW-0, SETB-SW-0, and SETB-FW-0 standards.
30° Maximum for Safety End Treatment
SL:1 = Horizontal:1 Vertical
Side Slope at culvert for Flared or Straight Wingwalls. Channel Slope for Parallel Wingwalls.
Slope shall be 3:1 or flatter for Safety End Treatments.

T = Box Culvert Top Slab Thickness. Can be found on the applicable Box Culvert Standard.

U = Box Culvert Wall Thickness. Can be found on the applicable Box Culvert Standard.

C = Curb Height.

See applicable wing or end treatment standards for calculations of Hw, A, B, Lw, Ltw, Atw, and Total Wingwall Area.
Hw = Height of Wingwall.
A = Distance from Face of Curb to End of Wingwall (Not applicable to Parallel or Straight Wingwalls).
B = Offset of End of Wingwall (Not applicable to Parallel or Straight Wingwalls).
Lw = Length of Longest Wingwall.
Ltw = Length of Culvert Toewall (Not applicable when using Riprap Apron).
Atw = Length of Anchor Toewall (Applicable to Safety End Treatment only).
Total Wingwall Area = Wingwall area in S.F. for two wingwalls (one structure end) if Lt or Rt.
Area for four wingwalls (two structure ends) if Both.

(1) The wall heights shown will be rounded to the nearest Foot for bidding purposes.

(2) Concrete volume shown is for box culvert curb only. Curb concrete is considered part of the Box Culvert for payment.

(3) Concrete volume shown is total of wing, footing, culvert toewall (if any), anchor toewall (if any) and wingwall toewall. Riprap apron, culvert and curb quantities are not included.

GENERAL NOTES:

This sheet is a supplement to the Box Culvert standards. It is to be filled out by the culvert specifier and provides dimensions for the construction of the Box Culvert Wingwalls and Safety End Treatments.

An Excel 97 spreadsheet to assist in completing this table can be downloaded from the Bridge Standards (English) web page on the TxDOT web site.

STATE OF TEXAS
JAMES J. ROOHMS
83383
REGISTERED
PROFESSIONAL ENGINEER
9/22/2004

Texas Department of Transportation
Bridge Division

BOX CULVERT SUPPLEMENT
WINGS AND END TREATMENTS

BCS

FILE: bcsstde1.dgn	DN: GAF	CK: CAT	DW: TxDOT	CK: GAF
©TxDOT September 2000	DISTRICT	FEDERAL AID PROJECT		SHEET
REVISIONS	AUS	CC 337-1-29		112
	COUNTY	CONTROL	SECT	JOB	HIGHWAY
	WILLIAMSON	0337	01	029	SH 29

...\DRAINAGE\BCSSTDE1.dgn 9/22/2004 6:49:40 AM

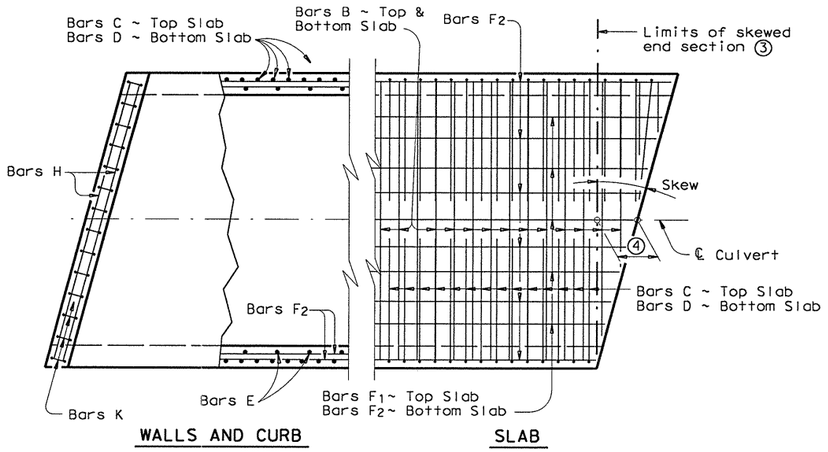

PLAN OF SKEWED ENDS ~ FROM 0° TO 15° ⑦

② When the spacing between Bars B becomes less than half of the normal spacing, bars shall be cut to avoid fouling

③ The length of Bars B and E will vary in the skewed end sections

④ [One half of overall width] x [Tan of the skew angle]

⑤ Bars F_1 and F_2 shall be continuous through the angle section. They shall be bent to remain parallel to the walls of the Box Culvert.

⑥ When necessary to avoid fouling in acute corners, the slab extension leg of Bars C and Bars D may be shortened to a minimum of 1'-6" for skews of 30° and 45°.

⑦ For skews of 15° or less, the contractor has the option of placing Bars B, C and D parallel to the skewed end while maintaining spacing along centerline box. Lengths of Bars B shown on the standards shall be increased to accommodate the skew.

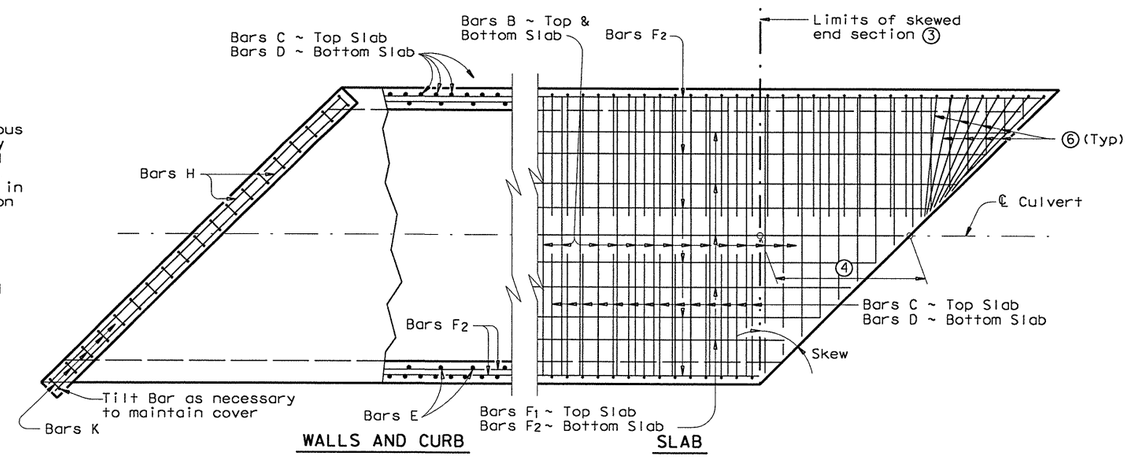

PLAN OF SKEWED ENDS ~ OVER 30° TO 45°

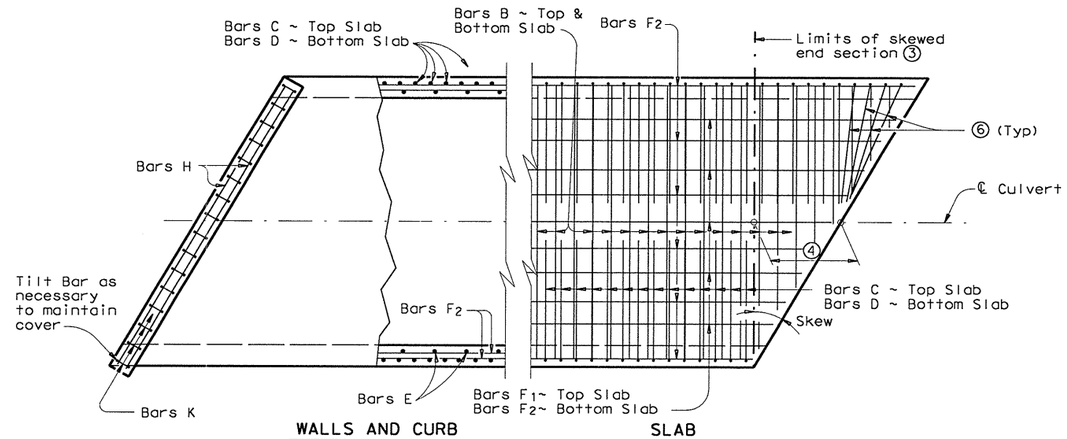

PLAN OF SKEWED ENDS ~ OVER 15° TO 30°

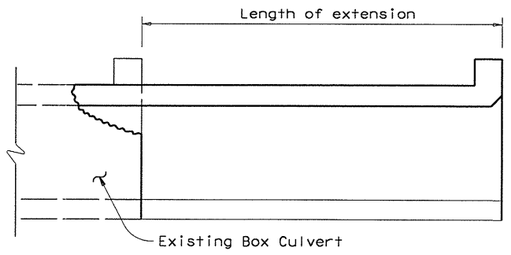

LENGTHENING DETAIL ①

① For box culverts with less than 2'-0" of fill, the top slab shall be broken back to provide a minimum 1'-10" lap of the existing longitudinal bars with the longitudinal bars in the extension. If the depth of fill is 2'-0" or greater, the top slab shall be broken back to provide a 1'-0" minimum embedment of existing longitudinal reinforcing into the extension. Alternatively, if the fill height is greater than 2'-0", the existing curb may be left in place and 2'-0" long #6 bars shall be drilled and grouted 1'-0" into the existing top slab at 1'-6" center to center spacing. Wings and apron shall be broken back as necessary to install the extension. Exposed wingwall and apron reinforcing may be removed or cleaned and included in the extension. When lengthening existing box culverts with dimensions different than current standard dimensions, horizontal and vertical transitions shall be formed as directed by the Engineer. Bottom slabs shall match to maintain an uninterrupted flow line. Existing and new reinforcing shall be field bent into transition maintaining specified cover requirements.

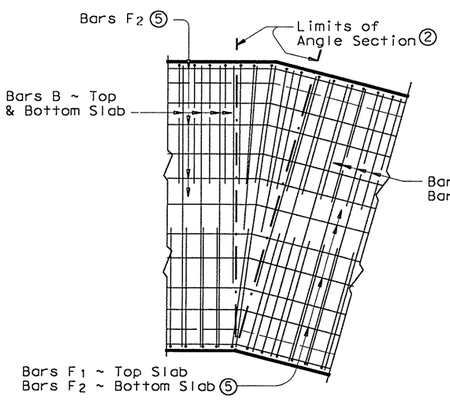

PLAN OF ANGLE SECTION ~ FROM 0° TO 15°

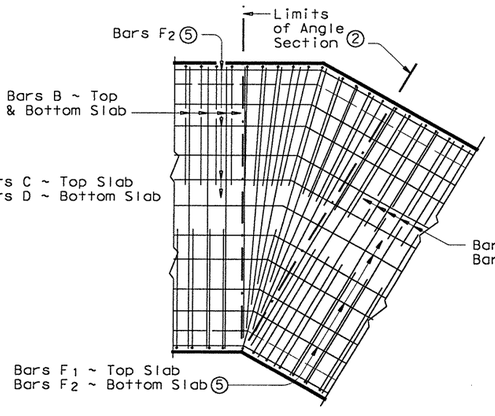

PLAN OF ANGLE SECTION ~ OVER 15° TO 30°

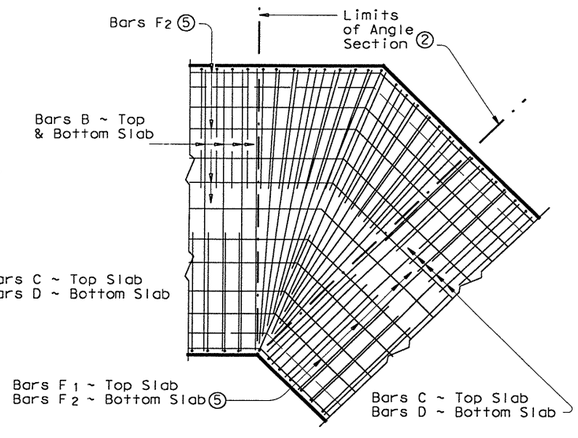

PLAN OF ANGLE SECTION ~ OVER 30° TO 45°

GENERAL NOTES:

Designed according to current AASHTO Standard and Interim Specifications.

All reinforcing steel shall be Grade 60.

All concrete shall be Class "C" with these exceptions: use Class "S" for top slabs of culverts with overlay, with 1-to-2 course surface treatment, or with the top slab as the final riding surface.

Class "C" concrete shall have a minimum compressive strength of 3600 psi. Class "S" concrete shall have a minimum compressive strength of 4000 psi.

Refer to Single Box Culverts Cast-in-Place standard for details of straight sections of culvert. For skewed sections and angle sections refer to Single Box Culverts Cast-in-Place standard for slab and wall dimensions, bar sizes, maximum bar spacing, and any other details not shown. For Skewed ends with curbs, adjust length of Bars H, number of Bars K, curb concrete volume and reinforcing steel weight by dividing the values shown on the culvert standards by the cosine of the skew angle.

Laps for Bars H, when required, shall be 1'-9" for uncoated bars and 2'-7" for epoxy coated.

HS20 LOADING

Texas Department of Transportation
Bridge Division

SINGLE BOX CULVERTS CAST-IN-PLACE MISCELLANEOUS DETAILS

SCC-MD

FILE: sccmdste.dgn	DN: CAF	CK: LMW	DW: BWH/TxDOT	CK: CAF		
© TxDOT December 2003	DISTRICT	FEDERAL AID PROJECT			SHEET	
REVISIONS	AUS	CC 337-1-29			113	
	COUNTY		CONTROL	SECT	JOB	HIGHWAY
	WILLIAMSON		0337	01	029	SH 29

...\drainage\sccmdste.dgn 09/21/2004 10:09:29 AM

BILLS OF REINFORCING STEEL (For Box Length = 40 feet)

SECTION DIMENSIONS				FILL HEIGHT ⑤	Bars B					Bars C							Bars D							Bars E~#4 at 18" Max			Bars F_1 ~#4				Bars F_2~#4 at 18" Max			Bars H 4~#4		Bars K		QUANTITIES: Per foot of Barrel		Curb		Total	
S	H	T	U		No.	Size	Spa	Length	Weight	No.	Size	Spa	Length	Weight	"X"	"Y"	No.	Size	Spa	Length	Weight	"Y"	"Z"	No.	Length	Wt	No.	Spa	Length	Wt	No.	Length	Wt	Length	Wt	No.	Wt	Conc (CY)	Reinf (Lb)	Conc (CY)	Reinf (Lb)	Conc (CY)	Reinf (Lb)
5'-0"	2'-0"	7"	7"	26'	194	#5	5"	5'-11"	1,197	162	#5	6"	5'- 2"	873	2'- 5"	2'- 9"	162	#5	6"	5'- 4"	901	2'- 9"	2'- 7"	56	2'-0"	75	8	7"	39'-9"	212	22	39'-9"	584	5'-11"	16	14	40	0.353	96.1	0.5	56	14.6	3,898
5'-0"	2'-0"	8"	7"	30'	194	#5	5"	5'-11"	1,197	194	#4	5"	5'- 0"	648	2'- 6"	2'- 6"	194	#4	5"	4'- 9"	616	2'- 6"	2'- 3"	56	2'-0"	75	4	18"	39'-9"	106	22	39'-9"	584	5'-11"	16	14	40	0.391	80.7	0.5	56	16.1	3,282
5'-0"	3'-0"	7"	7"	26'	194	#5	5"	5'-11"	1,197	194	#4	5"	5'-11"	767	3'- 5"	2'- 6"	194	#4	5"	4'- 8"	605	2'- 6"	2'- 2"	56	3'-0"	112	8	7"	39'-9"	212	26	39'-9"	690	5'-11"	16	14	40	0.396	89.6	0.5	56	16.3	3,639
5'-0"	3'-0"	8"	7"	30'	194	#5	5"	5'-11"	1,197	194	#4	5"	6'- 0"	778	3'- 6"	2'- 6"	194	#4	5"	4'- 9"	616	2'- 6"	2'- 3"	56	3'-0"	112	4	18"	39'-9"	106	26	39'-9"	690	5'-11"	16	14	40	0.434	87.5	0.5	56	17.9	3,555
5'-0"	4'-0"	7"	7"	26'	194	#5	5"	5'-11"	1,197	194	#4	5"	6'-11"	896	4'- 5"	2'- 6"	194	#4	5"	4'- 8"	605	2'- 6"	2'- 2"	56	4'-0"	150	8	7"	39'-9"	212	26	39'-9"	690	5'-11"	16	14	40	0.439	93.8	0.5	56	18.1	3,806
5'-0"	4'-0"	8"	7"	30'	194	#5	5"	5'-11"	1,197	194	#4	5"	7'- 0"	907	4'- 6"	2'- 6"	194	#4	5"	4'- 9"	616	2'- 6"	2'- 3"	56	4'-0"	150	4	18"	39'-9"	106	26	39'-9"	690	5'-11"	16	14	40	0.477	91.7	0.5	56	19.6	3,722
5'-0"	5'-0"	7"	7"	26'	194	#5	5"	5'-11"	1,197	194	#4	5"	7'-11"	1,026	5'- 5"	2'- 6"	194	#4	5"	4'- 8"	605	2'- 6"	2'- 2"	56	5'-0"	187	8	7"	39'-9"	212	30	39'-9"	797	5'-11"	16	14	40	0.483	100.6	0.5	56	19.8	4,080
5'-0"	5'-0"	8"	7"	30'	194	#5	5"	5'-11"	1,197	194	#4	5"	8'- 0"	1,037	5'- 6"	2'- 6"	194	#4	5"	4'- 9"	616	2'- 6"	2'- 3"	56	5'-0"	187	4	18"	39'-9"	106	30	39'-9"	797	5'-11"	16	14	40	0.521	98.5	0.5	56	21.3	3,996
6'-0"	3'-0"	7"	7"	20'	194	#5	5"	6'-11"	1,400	162	#5	6"	6'- 6"	1,098	3'- 5"	3'- 1"	162	#5	6"	5'- 8"	957	3'- 1"	2'- 7"	56	3'-0"	112	10	7"	39'-9"	266	29	39'-9"	770	6'-11"	18	16	45	0.439	115.1	0.5	63	18.1	4,666
6'-0"	3'-0"	8"	7"	26'	162	#6	6"	6'-11"	1,683	162	#5	6"	6'- 7"	1,112	3'- 6"	3'- 1"	162	#5	6"	5'- 9"	972	3'- 1"	2'- 8"	56	3'-0"	112	5	18"	39'-9"	133	29	39'-9"	770	6'-11"	18	16	45	0.484	119.6	0.5	63	19.9	4,845
6'-0"	3'-0"	9"	8"	30'	162	#6	6"	7'- 1"	1,724	162	#5	6"	6'- 8"	1,126	3'- 7"	3'- 1"	162	#5	6"	5'-10"	986	3'- 1"	2'- 9"	56	3'-0"	112	5	18"	39'-9"	133	29	39'-9"	770	7'- 1"	19	18	51	0.556	121.3	0.5	70	22.7	4,921
6'-0"	4'-0"	7"	7"	20'	194	#5	5"	6'-11"	1,400	194	#4	5"	7'- 3"	940	4'- 5"	2'-10"	194	#4	5"	5'- 0"	648	2'-10"	2'- 2"	56	4'-0"	150	10	7"	39'-9"	266	29	39'-9"	770	6'-11"	18	16	45	0.483	104.4	0.5	63	19.8	4,237
6'-0"	4'-0"	8"	7"	26'	194	#6	5"	6'-11"	2,015	162	#5	6"	7'- 7"	1,281	4'- 6"	3'- 1"	162	#5	6"	5'- 9"	972	3'- 1"	2'- 8"	56	4'-0"	150	5	18"	39'-9"	133	29	39'-9"	770	6'-11"	18	16	45	0.527	133.0	0.5	63	21.6	5,384
6'-0"	4'-0"	9"	8"	30'	162	#6	6"	7'- 1"	1,724	162	#5	6"	7'- 8"	1,295	4'- 7"	3'- 1"	162	#5	6"	5'-10"	986	3'- 1"	2'- 9"	56	4'-0"	150	5	18"	39'-9"	133	29	39'-9"	770	7'- 1"	19	18	51	0.605	126.5	0.5	70	24.7	5,128
6'-0"	5'-0"	7"	7"	20'	194	#5	5"	6'-11"	1,400	194	#4	5"	8'- 3"	1,069	5'- 5"	2'-10"	194	#4	5"	5'- 0"	648	2'-10"	2'- 2"	56	5'-0"	187	10	7"	39'-9"	266	33	39'-9"	876	6'-11"	18	16	45	0.526	111.2	0.5	63	21.5	4,509
6'-0"	5'-0"	8"	7"	26'	194	#6	5"	6'-11"	2,015	162	#5	6"	8'- 7"	1,450	5'- 6"	3'- 1"	162	#5	6"	5'- 9"	972	3'- 1"	2'- 8"	56	5'-0"	187	5	18"	39'-9"	133	33	39'-9"	876	6'-11"	18	16	45	0.570	140.8	0.5	63	23.3	5,696
6'-0"	5'-0"	9"	8"	30'	194	#6	5"	7'- 1"	2,064	162	#5	6"	8'- 8"	1,464	5'- 7"	3'- 1"	162	#5	6"	5'-10"	986	3'- 1"	2'- 9"	56	5'-0"	187	5	18"	39'-9"	133	33	39'-9"	876	7'- 1"	19	18	51	0.654	142.8	0.5	70	26.7	5,780
6'-0"	6'-0"	7"	7"	20'	194	#5	5"	6'-11"	1,400	194	#4	5"	9'- 3"	1,199	6'- 5"	2'-10"	194	#4	5"	5'- 0"	648	2'-10"	2'- 2"	56	6'-0"	224	10	7"	39'-9"	266	37	39'-9"	982	6'-11"	18	16	45	0.569	118.0	0.5	63	23.3	4,782
6'-0"	6'-0"	8"	7"	26'	194	#6	5"	6'-11"	2,015	162	#5	6"	9'- 7"	1,619	6'- 6"	3'- 1"	162	#5	6"	5'- 9"	972	3'- 1"	2'- 8"	56	6'-0"	224	5	18"	39'-9"	133	37	39'-9"	982	6'-11"	18	16	45	0.613	148.6	0.5	63	25.0	6,008
6'-0"	6'-0"	9"	8"	30'	194	#6	5"	7'- 1"	2,064	162	#5	6"	9'- 8"	1,633	6'- 7"	3'- 1"	162	#5	6"	5'-10"	986	3'- 1"	2'- 9"	56	6'-0"	224	5	18"	39'-9"	133	37	39'-9"	982	7'- 1"	19	18	51	0.704	150.6	0.5	70	28.7	6,092

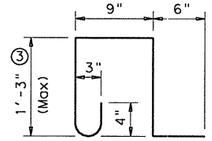

BARS K ~ #4
(Spa = 1'-0" Max)
(Length = 4'-3")

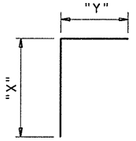

BARS C

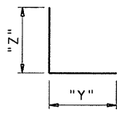

BARS D

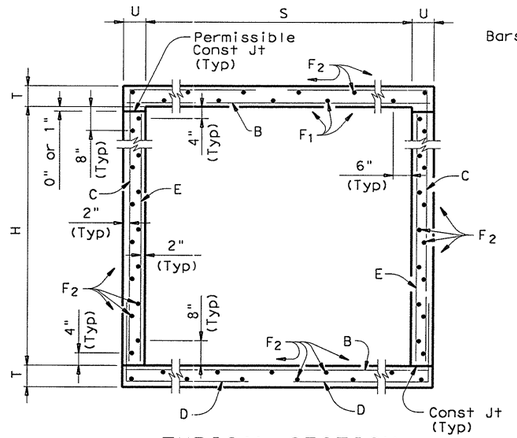

TYPICAL SECTION

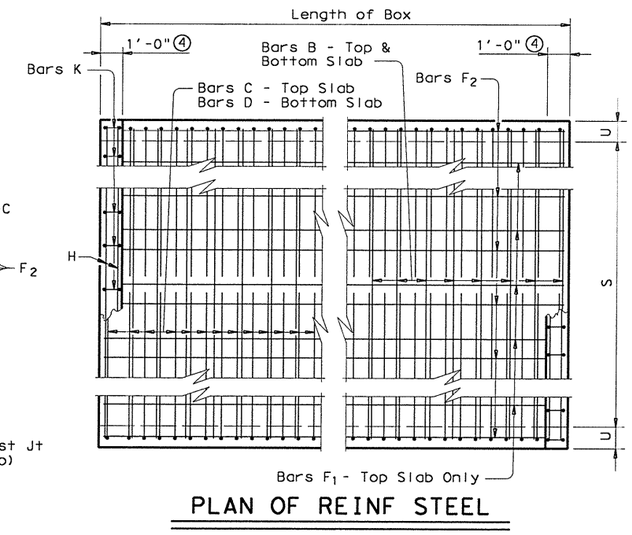

PLAN OF REINF STEEL

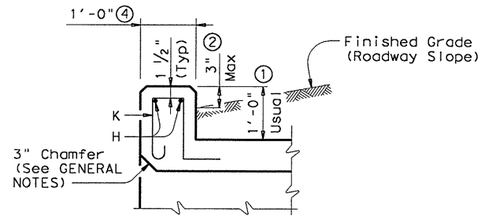

SECTION THRU CURB

① 0" min to 5'-0" max. Estimated curb heights are shown elsewhere in the plans. For structures without railing and curbs taller than 1'-0", refer to ECD standard. For structures with T6 bridge rail, refer to T6-CM standard. For structures with bridge rail, other than T6, refer to RAC standard.

② For vehicle safety, the following requirements must be met:
- For structures without bridge rail, curbs shall project no more than 3" above finished grade.
- For structures with bridge rail, curbs shall be flush with finished grade.

Curb heights shall be reduced, if necessary, to meet the above requirements. No changes will be made in quantities and no additional compensation will be allowed for this work.

③ For curbs less than 1'-0" high, tilt bars K or reduce bar height as necessary to maintain cover. For curbs less than 3" high, bars K may be omitted.

④ 1'-0" typical. 2'-0" when RAC standard is referred to elsewhere in the plans.

⑤ For each box size, minimum fill height shown shall be used for all culverts with less than 2'-0" of fill.

GENERAL NOTES:

Designed according to current AASHTO Standard and Interim Specifications.

Designed to the maximum fill heights shown.

All reinforcing steel shall be Grade 60.

All concrete shall be Class "C" with these exceptions: use Class "S" for top slabs of culverts with overlay, with 1-to-2 course surface treatment, or with the top slab as the final riding surface.

Class "C" concrete shall have a minimum compressive strength of 3600 psi. Class "S" concrete shall have a minimum compressive strength of 4000 psi.

Reinforcing bars shall be adjusted to provide a minimum of 1 1/4 inches clear cover.

The bottom edge of the top slab shall be chamfered 3 inches at the entrance.

Construction joints shown at the flow line may be raised a maximum of 6 inches at the Contractor's option. If this option is used, Bars E may be cut off or raised, and Bars C and D may be reversed.

See Standard SCC-MD for skewed ends, angle sections and lengthening details.

HS20 LOADING

Texas Department of Transportation
Bridge Division

SINGLE BOX CULVERTS CAST-IN-PLACE
0' TO 30' FILL

SCC-5 & 6

FILE: scc56ste.dgn	DN: GAF	CK: LMW	DW: BWH/TxDOT	CK: GAF
©TxDOT December 2003	DISTRICT	FEDERAL AID PROJECT		SHEET
REVISIONS	AUS	CC 337-1-29		114
	COUNTY	CONTROL	SECT	JOB	HIGHWAY
	WILLIAMSON	0337	01	029	SH 29

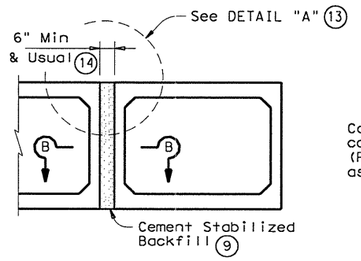

MULTIPLE UNIT PLACEMENT

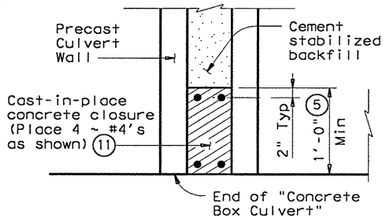

SECTION B-B

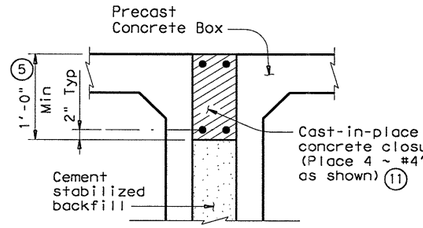

DETAIL "A" (13)

(Wall closure detail for multiple units subject to direct traffic)

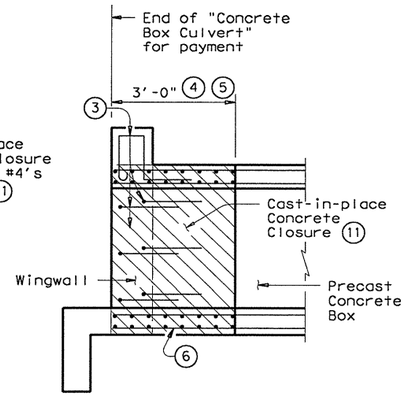

WINGWALL CONNECTION

(Also applies to Safety End Treatment)

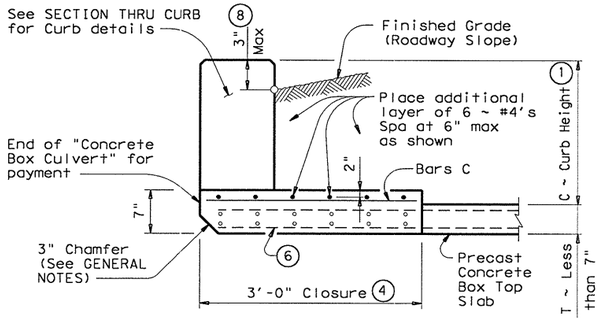

SECTION THRU TOP SLABS LESS THAN 7"

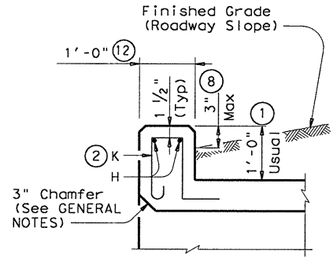

SECTION THRU CURB

(10) QUANTITIES PER FOOT OF CURB	
Reinforcing Steel	4.18 Lb
Concrete	0.037 CY

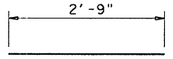

BARS C ~ #4
(Spa = 1'-0" Max)

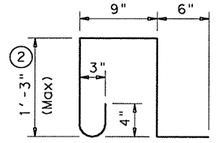

BARS K ~ #4
(Spa = 1'-0" Max)
(Length = 4'-3")

(1) 0" min to 5'-0" max. Estimated curb heights are shown elsewhere in the plans. For structures without railing and curbs taller than 1'-0", refer to ECD standard. For structures with T6 bridge rail, refer to T6-CM standard. For structures with bridge rail, other than T6, refer to RAC standard.

(2) For curbs less than 1'-0" high, tilt Bars K or reduce bar height as necessary to maintain cover. For curbs less than 3" high, Bars K may be omitted.

(3) Curb, Wingwall or Safety End Treatment reinforcing shall extend into concrete closure. Any reinforcing that does not fit into the closure shall be bent or trimmed as necessary.

(4) Cast-in-place concrete closure shall be 3'-0" min. Boxes shall be cast short or broken back in the field. All reinforcing in the closure shall be the same size and spacing as in the precast box section. Except where shown otherwise, the cast-in-place closure shall be flush with the inside and outside faces of the precast box section.

(5) For multiple unit placements the length of the closure for the interior walls may be adjusted as necessary. The length of the top slab, bottom slab, and exterior wall closure shall not be less than 3'-0". See Section B-B detail when interior walls are cast full length.

(6) Precast box reinforcing shall extend a minimum of 2'-9" into concrete closure (Typ).

(7) Bands of reinforcing matching the inside and outside face reinforcing shall be placed in the gaps of the top and bottom slabs. A band matching the outside face reinforcing of the wall shall be placed in the gaps of the walls (placed in the outside face only). The bands shall be tack welded to the exposed reinforcing at each point of contact.

(8) For vehicle safety, the following requirements must be met:
- For structures without bridge rail, curbs shall project no more than 3" above finished grade.
- For structures with bridge rail, curbs shall be flush with finished grade.

Curb heights shall be reduced, if necessary, to meet the above requirements. No changes will be made in quantities and no additional compensation will be allowed for this work.

(9) Cement Stabilized Backfill between boxes is considered part of the Box Culvert for payment.

(10) All curb concrete and reinforcing is considered part of the Box Culvert for payment.

(11) Any additional concrete and reinforcing required for the closures shall be considered as subsidiary to the Concrete Box Culvert.

(12) 1'-0" typical. 2'-0" when RAC standard is referred to elsewhere in the plans.

(13) For multiple unit placement with overlay, with 1 to 2 course surface treatment, or with the top slab as the final riding surface, provide wall closure as shown in DETAIL "A".

(14) This dimension may be increased with approval of the Engineer to allow the precast boxes to be tunneled or jacked in accordance with Item 476, "Jacking, Boring, or Tunneling Pipe or Box". No payment will be made for any additional material in the gap between adjacent boxes.

GENERAL NOTES:

Designed according to current AASHTO Standard and Interim Specifications.

All closure concrete shall be Class "C" with a minimum compressive strength of 3600 psi and shall be placed according to the Item, "Concrete Structures".

Any additional concrete required for the closures shall be considered as subsidiary to the Concrete Box Culvert.

Refer to the Single Box Culverts Precast standard for details not shown.

The bottom edge of the top slab closure shall be chamfered 3 inches at the entrance.

HS20 LOADING

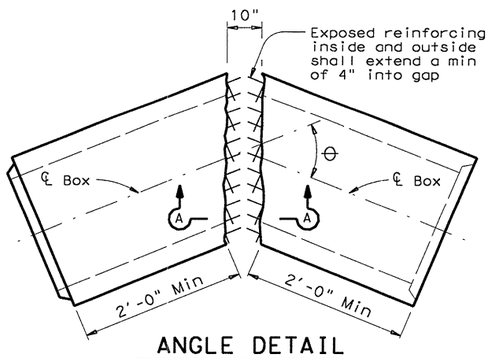

ANGLE DETAIL

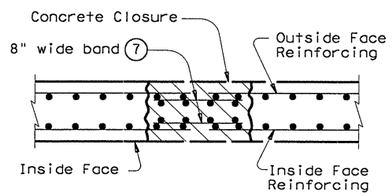

SECTION A-A

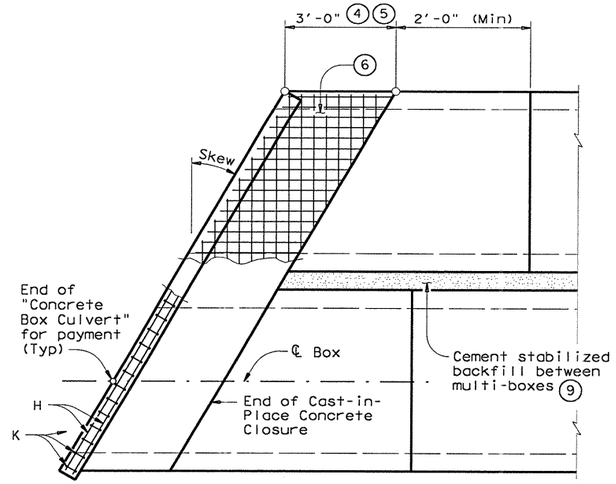

PLAN OF SKEWED ENDS

(Showing multi-box placement)

Texas Department of Transportation
Bridge Division

BOX CULVERTS PRECAST MISCELLANEOUS DETAILS

SCP-MD

FILE: scpmdste.dgn	DN: GAF	CK: LMW	DW: BWH/TxDOT	CK: GAF			
© TxDOT December 2003	DISTRICT	FEDERAL AID PROJECT			SHEET		
REVISIONS	AUS	CC 337-1-29			115		
	COUNTY		CONTROL	SECT	JOB	HIGHWAY	
	WILLIAMSON		0337	01	029	SH 29	

...\drainage\scpmdste.dgn 09/21/2004 10:09:29 AM

BOX DATA

SECTION DIMENSIONS					Fill Height	M (Min)	REINFORCING (in²/ft) ②								① Lift Weight (Tons)	Governing ASTM Standard
S (ft)	H (ft)	T_T (in)	T_B (in)	T_S (in)	(ft)	(in)	A_{S1}	A_{S2}	A_{S3}	A_{S4}	A_{S7}	A_{S8}	A_{S5}	A_{S6}		
6	3	8	7	7	< 2	-	0.30	0.42	0.21	0.17	0.19	0.17	0.19	0.19	7.9	C 850
6	3	7	7	7	2	29	0.30	0.29	0.22	0.17	-	-	-	-	7.5	C 789
6	3	7	7	7	3	24	0.21	0.19	0.18	0.17	-	-	-	-	7.5	C 789
6	3	7	7	7	4	24	0.18	0.17	0.17	0.17	-	-	-	-	7.5	C 789
6	3	7	7	7	5	24	0.17	0.17	0.17	0.17	-	-	-	-	7.5	C 789
6	3	7	7	7	6	23	0.17	0.17	0.17	0.17	-	-	-	-	7.5	C 789
6	3	7	7	7	8	23	0.17	0.18	0.18	0.17	-	-	-	-	7.5	C 789
6	3	7	7	7	10	23	0.20	0.20	0.21	0.17	-	-	-	-	7.5	C 789
6	3	7	7	7	12	23	0.23	0.23	0.24	0.17	-	-	-	-	7.5	C 789
6	3	7	7	7	14	23	0.26	0.26	0.26	0.17	-	-	-	-	7.5	C 789
6	3	7	7	7	16	23	0.28	0.29	0.29	0.17	-	-	-	-	7.5	C 789
6	3	7	7	7	18	23	0.31	0.32	0.32	0.17	-	-	-	-	7.5	C 789
6	4	8	7	7	< 2	-	0.26	0.46	0.24	0.17	0.19	0.17	0.20	0.19	8.6	C 850
6	4	7	7	7	2	28	0.26	0.33	0.26	0.17	-	-	-	-	8.2	C 789
6	4	7	7	7	3	25	0.18	0.22	0.21	0.17	-	-	-	-	8.2	C 789
6	4	7	7	7	4	24	0.17	0.19	0.19	0.17	-	-	-	-	8.2	C 789
6	4	7	7	7	5	23	0.17	0.18	0.19	0.17	-	-	-	-	8.2	C 789
6	4	7	7	7	6	23	0.17	0.18	0.19	0.17	-	-	-	-	8.2	C 789
6	4	7	7	7	8	23	0.17	0.20	0.21	0.17	-	-	-	-	8.2	C 789
6	4	7	7	7	10	22	0.18	0.23	0.24	0.17	-	-	-	-	8.2	C 789
6	4	7	7	7	12	22	0.20	0.26	0.26	0.17	-	-	-	-	8.2	C 789
6	4	7	7	7	14	22	0.22	0.29	0.30	0.17	-	-	-	-	8.2	C 789
6	4	7	7	7	16	22	0.24	0.32	0.33	0.17	-	-	-	-	8.2	C 789
6	4	7	7	7	18	22	0.27	0.35	0.36	0.17	-	-	-	-	8.2	C 789
6	5	8	7	7	< 2	-	0.23	0.48	0.26	0.17	0.19	0.17	0.21	0.19	9.3	C 850
6	5	7	7	7	2	33	0.24	0.36	0.29	0.17	-	-	-	-	8.9	C 789
6	5	7	7	7	3	27	0.17	0.24	0.23	0.17	-	-	-	-	8.9	C 789
6	5	7	7	7	6	25	0.17	0.20	0.21	0.17	-	-	-	-	8.9	C 789
6	5	7	7	7	8	23	0.17	0.21	0.22	0.17	-	-	-	-	8.9	C 789
6	5	7	7	7	10	23	0.17	0.24	0.25	0.17	-	-	-	-	8.9	C 789
6	5	7	7	7	12	23	0.17	0.27	0.29	0.17	-	-	-	-	8.9	C 789
6	5	7	7	7	14	23	0.19	0.31	0.32	0.17	-	-	-	-	8.9	C 789
6	5	7	7	7	16	22	0.21	0.34	0.35	0.17	-	-	-	-	8.9	C 789
6	5	7	7	7	18	22	0.23	0.37	0.39	0.17	-	-	-	-	8.9	C 789
6	6	8	7	7	< 2	-	0.20	0.51	0.29	0.17	0.19	0.17	0.22	0.19	10.0	C 850
6	6	7	7	7	2	48	0.22	0.39	0.31	0.17	-	-	-	-	9.6	C 789
6	6	7	7	7	3	33	0.17	0.26	0.25	0.17	-	-	-	-	9.6	C 789
6	6	7	7	7	4	29	0.17	0.22	0.23	0.17	-	-	-	-	9.6	C 789
6	6	7	7	7	5	27	0.17	0.21	0.22	0.17	-	-	-	-	9.6	C 789
6	6	7	7	7	6	26	0.17	0.21	0.22	0.17	-	-	-	-	9.6	C 789
6	6	7	7	7	8	25	0.17	0.22	0.24	0.17	-	-	-	-	9.6	C 789
6	6	7	7	7	10	24	0.17	0.25	0.27	0.17	-	-	-	-	9.6	C 789
6	6	7	7	7	12	24	0.17	0.28	0.30	0.17	-	-	-	-	9.6	C 789
6	6	7	7	7	14	24	0.17	0.32	0.33	0.17	-	-	-	-	9.6	C 789
6	6	7	7	7	16	24	0.19	0.35	0.37	0.17	-	-	-	-	9.6	C 789
6	6	7	7	7	18	23	0.21	0.38	0.40	0.17	-	-	-	-	9.6	C 789

① For Box Length = 8'-0"

② A_{S1} thru A_{S4}, A_{S7} and A_{S8} are minimum required areas of reinforcement per linear foot of box length. A_{S6} and A_{S5} are minimum required areas of reinforcement per linear foot of box width.

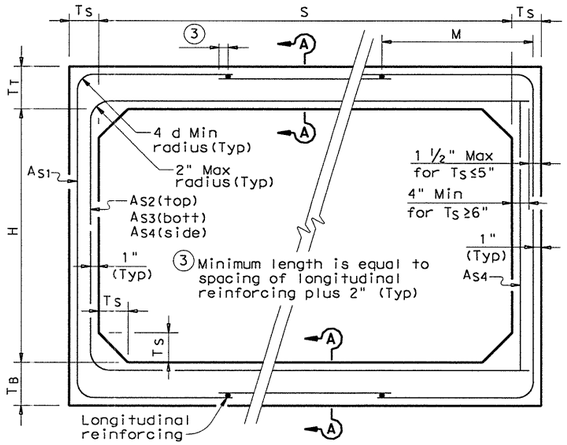

C789 CORNER OPTION "A"

C789 CORNER OPTION "B"

ASTM C789 STANDARD

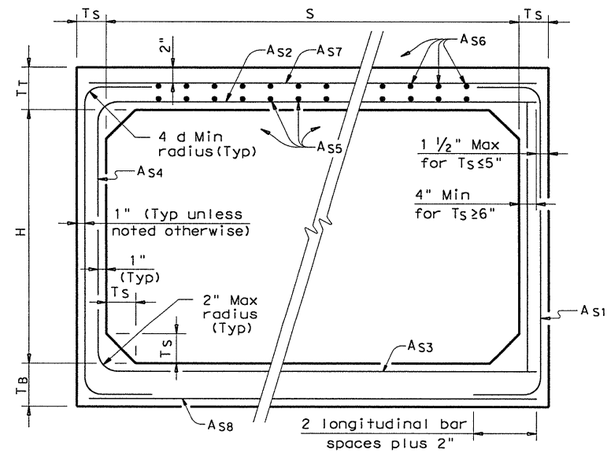

C850 CORNER OPTION "A"

C850 CORNER OPTION "B"

ASTM C850 STANDARD

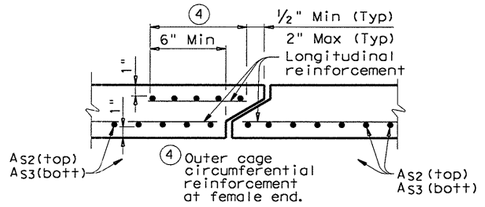

SECTION A-A

(TOP AND BOTTOM SLAB JOINT REINFORCEMENT)

GENERAL NOTES:

Designs shown conform to ASTM C789 or ASTM C850. Refer to ASTM C789 or ASTM C850 for information or details not shown.

For ASTM C789 designs, all reinforcing steel shall have a minimum specified yield stress of 65 ksi.

For ASTM C850 designs, all reinforcing steel shall have a minimum specified yield stress of 60 ksi.

All concrete shall be Class "H" Concrete with a minimum 28 day compressive strength of 5,000 psi.

See SCP-MD standard sheet for miscellaneous details and notes not shown.

Designed to the maximum fill height shown.

In lieu of furnishing the designs shown on this sheet, the contractor may furnish an alternate design that is equal to or exceeds the box design for the design fill height in the table. Shop plans for alternate designs shall be submitted in accordance with Item "Precast Concrete Structures".

HS20 LOADING

Texas Department of Transportation
Bridge Division

SINGLE BOX CULVERTS PRECAST
6'-0" SPAN

SCP-6

FILE: scp06ste.dgn	DN: GAF	CK: LMW	DW: BWH/TxDOT	CK: GAF
©TxDOT December 2003	DISTRICT	FEDERAL AID PROJECT		SHEET
REVISIONS	AUS	CC 337-1-29		116
	COUNTY	CONTROL	SECT	JOB	HIGHWAY
	WILLIAMSON	0337	01	029	SH 29

...\drainage\scp06ste.dgn 09/21/2004 10:09:29 AM

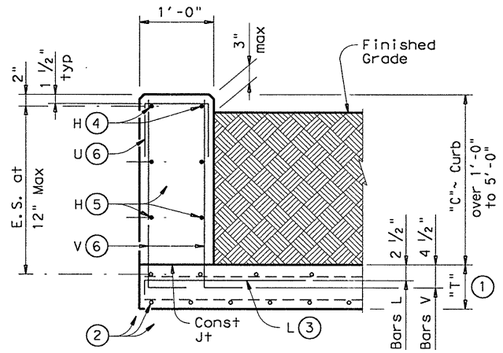

TYPICAL SECTION

Used for Curbs over 1'-0" to 5'-0"

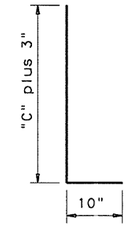

BARS V (#5) (6)

Spaced at 12" max

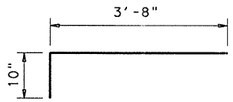

BARS L (#5) (3)

Spaced at 12" max

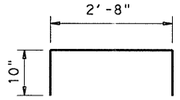

OPTIONAL BARS L (#5) (3) (7)

Spaced at 12" max

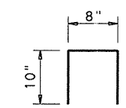

BARS U (#4) (6)

Spaced at 12" max

(1) "T" is equal to the culvert top slab thickness. For Precast Boxes with slabs less than 7", see SCP-MD Standard for additional details.

(2) Normal culvert slab bars adjusted as necessary to clear obstructions.

(3) Place bars L as shown. Tilt hook as necessary to maintain cover.

(4) Place normal culvert curb bars H (#4) as shown. Adjust as necessary to clear obstructions.

(5) Additional bars H (#4) as required to maintain 12" max spa.

(6) Replace normal culvert curb bars K with one bar U and two bars V as shown spaced at 12" max. Adjust length of bars V as necessary to maintain clear cover.

(7) Optional bars L are to be used only for precast box culverts with 3'-0" closure pour.

(8) Quantities shown are for contractor's information only. Quantities are per linear foot of curb length. The values for each section type in table can be interpolated for intermediate values of curb height, "C". Quantity includes bars K (when applicable).

TABLE OF ESTIMATED CURB QUANTITIES (8)

Curb Height "C"	Conc (CY/LF)	Reinf Steel (Lb/LF)
1'-0"	0.037	8.9
1'-6"	0.056	14.3
2'-0"	0.074	15.4
2'-6"	0.093	17.7
3'-0"	0.111	18.8
3'-6"	0.130	21.2
4'-0"	0.148	22.2
4'-6"	0.167	24.6
5'-0"	0.185	25.6

GENERAL NOTES:

Designed according to current AASHTO Standard and Interim Specifications.

These extended curb details have sufficient strength to allow for future retrofit of Type T6 railing. These details are not suitable for the mounting of other rail types. For new construction using T6 railing, use the T6-CM standards.

All reinforcing shall be Grade 60. Adjust reinforcing as necessary to provide 1 ¼" cover.

All concrete for curbs shall be Class "C" with a minimum compressive strength of 3600 psi.

This Curb shall be considered as part of the Box Culvert for payment.

For vehicle safety, the top of the curb shall project no more than 3" above the finished grade.

Texas Department of Transportation
Bridge Division

EXTENDED CURB DETAILS

FOR BOX CULVERTS WITH CURBS OVER 1'-0" TO 5'-0" TALL

ECD

FILE: ecdstde1.dgn	DN: GAF	CK:	DW: TxDOT	CK: GAF
©TxDOT December 2003	DISTRICT	FEDERAL AID PROJECT		SHEET
REVISIONS				117
	COUNTY	CONTROL	SECT	JOB	HIGHWAY
	WILLIAMSON	0337	01	029	SH 29

...\drainage\ecdstde1.dgn 09/21/2004 10:09:26 AM

TABLE OF DIMENSIONS & REINFORCING STEEL
(Wings for One Structure End)

Dimensions					Variable Reinforcing				Estimated ④ Quantities per ft of Wing (2~Wings)		Estimated Quantities per ft of Toewall (1~Toewall)	
					Bars J1		Bars J2					
Maximum Wingwall Height Hw	W	X	Y	Z	Size	Spa	Size	Spa	Reinf (Lb/Ft)	Conc (CY/Ft)	Reinf (Lb/Ft)	Conc (CY/Ft)
2'-6"	2'-10"	10"	1'- 0"	7"	#4	1'-0"	#4	1'-0"	43.13	0.406	6.85	0.071
2'-9"	2'-10"	10"	1'- 0"	7"	#4	1'-0"	#4	1'-0"	43.80	0.424	6.85	0.071
3'-0"	2'-10"	10"	1'- 0"	7"	#4	1'-0"	#4	1'-0"	44.47	0.444	6.85	0.071
3'-3"	2'-10"	10"	1'- 0"	7"	#4	1'-0"	#4	1'-0"	47.81	0.462	6.85	0.071
3'-6"	2'-10"	10"	1'- 0"	7"	#4	1'-0"	#4	1'-0"	48.48	0.480	6.85	0.071
4'-0"	3'- 2"	1'- 2"	1'- 0"	7"	#4	1'-0"	#4	1'-0"	50.26	0.532	6.85	0.071
4'-6"	3'- 2"	1'- 2"	1'- 0"	7"	#4	1'-0"	#4	1'-0"	54.27	0.568	6.85	0.071
5'-0"	3'- 9"	1'- 7"	1'- 2"	7"	#4	1'-0"	#4	1'-0"	57.94	0.632	6.96	0.075
5'-6"	3'- 9"	1'- 7"	1'- 2"	7"	#4	1'-0"	#4	1'-0"	61.95	0.668	6.96	0.075
6'-0"	4'- 4"	2'- 0"	1'- 4"	7"	#5	1'-0"	#5	1'-0"	75.16	0.730	7.07	0.078
6'-6"	4'- 4"	2'- 0"	1'- 4"	7"	#5	1'-0"	#5	1'-0"	79.54	0.768	7.07	0.078
7'-0"	5'- 0"	2'- 3"	1'- 9"	8"	#5	1'-0"	#5	1'-0"	86.65	0.864	8.07	0.093
7'-6"	5'- 0"	2'- 3"	1'- 9"	8"	#5	1'-0"	#5	1'-0"	91.03	0.902	8.07	0.093
8'-0"	5'- 6"	2'- 8"	1'-10"	8"	#5	6"	#5	6"	133.54	0.962	8.13	0.095
8'-6"	5'- 6"	2'- 8"	1'-10"	8"	#5	6"	#5	6"	138.96	1.000	8.13	0.095
9'-6"	6'- 0"	2'-10"	2'- 2"	9"	#5	6"	#5	6"	151.43	1.136	8.41	0.110
10'-6"	6'- 5"	3'- 0"	2'- 5"	9"	#6	6"	#5	6"	190.76	1.234	8.57	0.117
11'-6"	7'- 2"	3'- 6"	2'- 8"	11"	#6	6"	#6	6"	224.62	1.438	9.52	0.140
12'-6"	7'- 8"	3'- 9"	2'-11"	1'- 0"	#7	6"	#6	6"	277.90	1.592	9.74	0.157
13'-6"	8'- 2"	4'- 0"	3'- 2"	1'- 2"	#8	6"	#6	6"	343.21	1.804	10.02	0.186
14'-6"	8'-10"	4'- 5"	3'- 5"	1'- 4"	#9	6"	#6	6"	427.43	2.046	10.30	0.218
15'-6"	9'- 6"	4'-10"	3'- 8"	1'- 6"	#9	6"	#7	6"	484.01	2.302	11.24	0.253
16'-0"	9'-11"	5'- 0"	3'-11"	1'- 7"	#9	6"	#7	6"	500.21	2.448	11.47	0.279

TABLE OF WINGWALL REINFORCING (2~Wings)

Bar	Size	No.	Spa
D1	#5	~	1'-0"
D2	#5	~	1'-0"
E1	#4	~	1'-0"
F	#4	~	1'-0"
G	#5	~	1'-0"
M1	#4	4	~
P	#4	~	1'-0"
V	#4	~	1'-0"

TABLE OF TOEWALL REINFORCING

Bar	Size	No	Spa
J3	#4	~	1'-0"
M2	#4	2	~
E2	#4	~	1'-0"

WING DIMENSION CALCULATIONS:

Formulas: (All values are in Feet)

Hw = H + T + C

Lw = (Hw) (SL) ÷ Cosine (V)

For Cast-in-place culverts:

Ltw = [(N) (S) + (N + 1) (U)] ÷ (Cosine V)

For Precast culverts:

Ltw = [(N) (2 U + S) + (N - 1) (0.5')] ÷ (Cosine V)

Total Wingwall Area (Two Wings ~ S.F.) = (2) (Hw) (Lw)

Hw = Height of Wingwall
Lw = Length of Wingwall
Ltw = Culvert Toewall Length
N = Number of Culvert Spans
SL:1 = Channel Slope ratio. (Horizontal: 1 Vertical, Usual value is 2:1)
V = Culvert Skew

See applicable box culvert standard for S, H, T and U values.

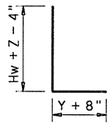

BARS J1

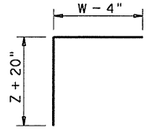

BARS J2

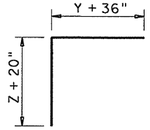

BARS J3

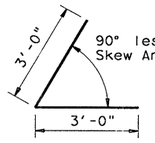

BARS D1

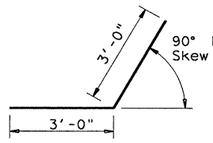

BARS D2



BARS V

1. Skew Angle = 0°
2. At discharge end, chamfer may be ¾".
3. For 15° Skew ~ 1"
   For 30° Skew ~ 2"
   For 45° Skew ~ 3"
4. Quantities shown are for two wings. To determine total quantities for two wings, multiply the tabulated values by Lw.
5. Provide weepholes for Hw = 5'-0" and greater. Fill around weepholes with coarse gravel.
6. Extend Bars E1 1'-6" minimum into the bottom slab of the culvert.
7. Lap Bars M1 1'-6" minimum with Bars M2.
8. Bars G shall be equally spaced at 1'-0" maximum, placed as shown. There shall be at least 4 Bars G per wing.
9. 0" min to 5'-0" max. For T6 or C6 Rail, see T6-CM standard for additional details. For all other rail types, refer to the RAC standard. For curbs without rail and greater than 1'-0" high, see ECD standard for additional details. Estimated curb heights are shown elsewhere in the plans.
10. For vehicle safety, the following requirements must be met:
    - For structures without bridge rail, curbs shall project no more than 3" above finished grade.
    - For structures with bridge rail, curbs shall be flush with finished grade.

    Curb heights shall be reduced, if necessary, to meet the above requirements. No changes will be made in quantities and no additional compensation will be allowed for this work.
11. 1'-0" typical. 2'-0" typical when RAC standard is referenced elsewhere in the plans.

GENERAL NOTES:

Designed according to current AASHTO Standard and Interim Specifications.

All reinforcing steel shall be Grade 60.

All concrete shall be Class "C" and shall have a minimum compressive strength of 3600 psi.

All reinforcing bars shall be adjusted to provide a minimum of 1 ¼" clear cover.

When structure is founded on solid rock, depth of toewalls for culverts and wingwalls may be reduced or eliminated as directed by the Engineer.

See BCS sheet for additional dimensions and information.

The quantities for concrete and reinforcing steel resulting from the formulas given on this sheet are for Contractor's information only.

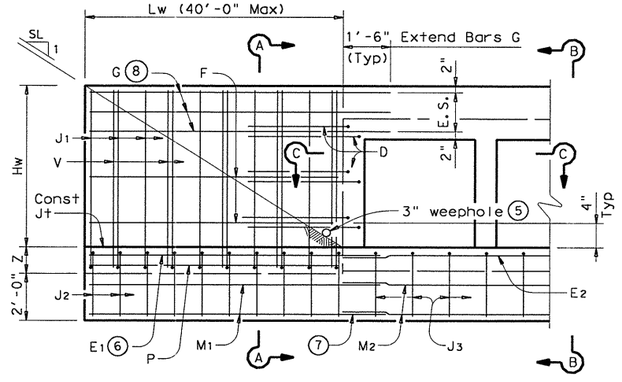

PARTIAL ELEVATION

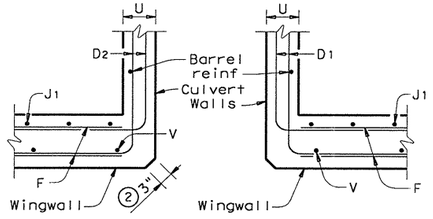

SECTION C-C

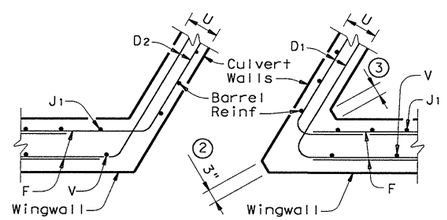

SECTION C-C

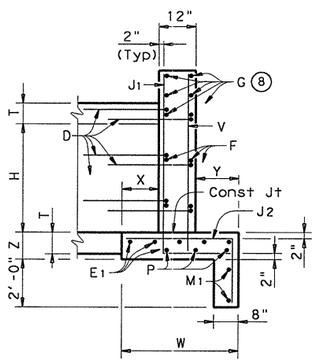

SECTION A-A
(Showing Wing Reinf)

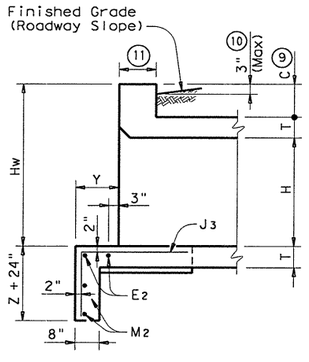

SECTION B-B
(Showing Toewall Reinf)

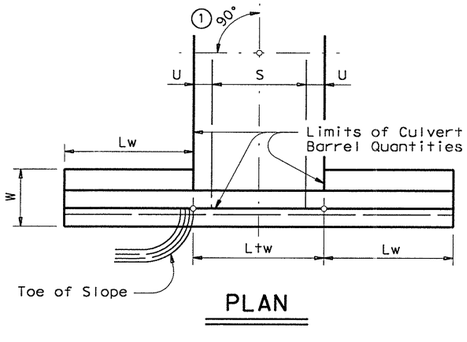

PLAN

DETAILS FOR NON-SKEWED BOX CULVERTS

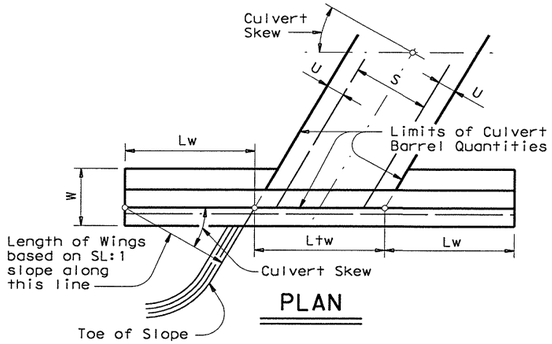

PLAN

DETAILS FOR SKEWED BOX CULVERTS
(Showing 30° Skew)

Texas Department of Transportation
Bridge Division

CONCRETE WINGWALLS
WITH PARALLEL WINGS FOR FOR SKEWED AND NON-SKEWED BOX CULVERTS

PW

FILE: pwstde01.dgn	DN: GAF	CK: CAT	DW: TxDOT	CK: CAF
©TxDOT December 2003	DISTRICT	FEDERAL AID PROJECT		SHEET
REVISIONS	AUS	CC 337-1-29		118
	COUNTY	CONTROL	SECT	JOB	HIGHWAY
	WILLIAMSON	0337	01	029	SH 29

...\drainage\pwstde01.dgn 09/21/2004 10:09:28 AM

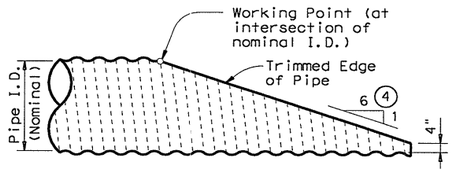

NOTE: All Cross Pipes, calculations, and dimensions are based on the pipe culverts mitered as shown in this detail. Alternate styles of mitered ends will require that appropriate adjustments be made to the values presented on this standard.

SIDE ELEVATION OF TYPICAL PIPE CULVERT MITER

(Showing Corrugated Metal Pipe Culvert.)
(Details at Concrete Pipe Culvert are similar.)

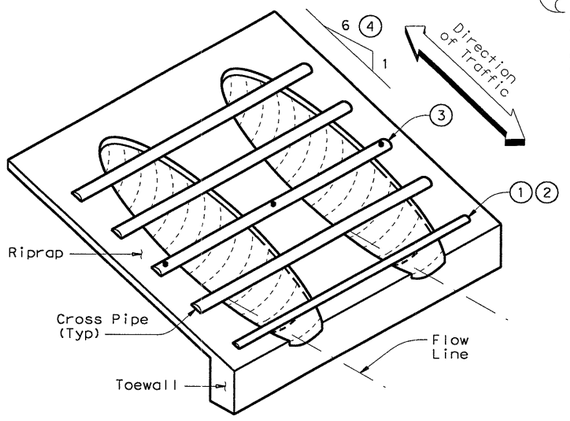

ISOMETRIC VIEW OF TYPICAL INSTALLATION

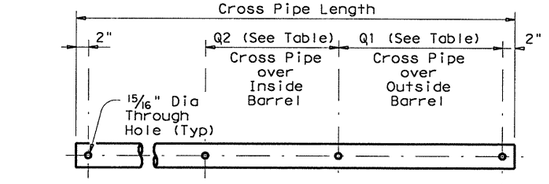

PIPE W/ BOLTED ANCHOR

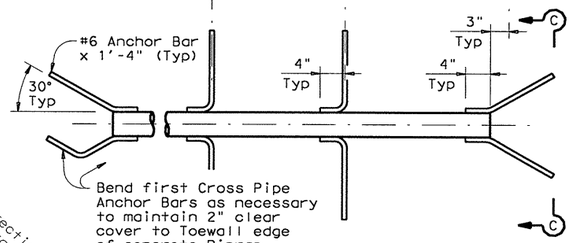

PIPE W/ ANCHOR BARS

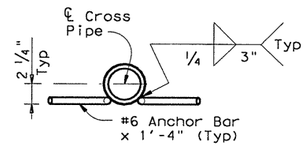

SECTION C-C

CROSS PIPE DETAILS

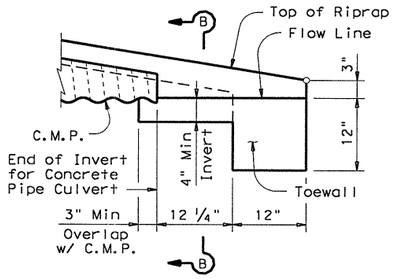

DETAIL "A"

(Showing Invert with Corrugated Metal Pipe Culvert. Concrete Pipe Culvert details are similar. Cross Pipes not shown for clarity.)

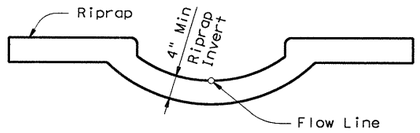

SECTION B-B

(Cross Pipes not shown for clarity.)

CROSS PIPE LENGTHS, REQUIRED PIPE SIZES, & RIPRAP QUANTITIES (2)							
Nominal Culvert I.D.	Conc Riprap (CY) (6)	Pipe Culvert Spa ~ G	Single Barrel ~ Q1	Multi-Barrel ~ Q1	Q2	Conditions for use of Cross Pipes	Cross Pipe Size
12"	0.6	9"	N/A	2'- 1"	1'- 9"	3 or more Pipe Culverts	3" Std (3.500" O.D.)
15"	0.7	11"	N/A	2'- 5"	2'- 2"		
18"	0.8	1'- 2"	N/A	2'-10"	2'- 8"		
21"	0.9	1'- 4"	N/A	3'- 2"	3'- 1"		
24"	0.9	1'- 7"	N/A	3'- 6"	3'- 7"		
27"	1.0	1'- 8"	N/A	3'-10"	3'-11"	3 or more Pipe Culverts	3 1/2" Std (4.000" O.D.)
30"	1.1	1'-10"	N/A	4'- 2"	4'- 4"	2 or more Pipe Culverts	
33"	1.2	1'-11"	4'- 2"	4'- 5"	4'- 8"	All Pipe Culverts	
36"	1.3	2'- 1"	4'- 5"	4'- 9"	5'- 1"	All Pipe Culverts	4" Std (4.500" O.D.)
42"	1.5	2'- 4"	4'-11"	5'- 5"	5'-10"		
48"	1.7	2'- 7"	5'- 5"	6'- 0"	6'- 7"	All Pipe Culverts	5" Std (5.563" O.D.)
54"	2.0	3'- 0"	5'-11"	6'- 9"	7'- 6"		
60"	2.2	3'- 3"	6'- 5"	7'- 4"	8'- 3"		
66"	2.4	3'- 3"	6'-11"	7'-10"	8'- 9"		
72"	2.7	3'- 4"	7'- 5"	8'- 5"	9'- 4"		

(1) The proper installation of the first Cross Pipe is critical for vehicle safety. The top of the first Cross Pipe must be placed at no more than 6" above the flow line.

(2) Size of Cross Pipes, except the first bottom pipe, shall be as shown in the PIPE SIZE table. The first bottom pipe shall be 3 1/2" Standard Pipe (4" O.D.).

(3) The third Cross Pipe from the bottom of the Culvert shall always be installed using a bolted connection. Care shall be taken to ensure that Riprap concrete does not flow into the Cross Pipe so as to permit disassembly of the bolted connection to allow cleanout access. At the Contractor's option, all other Cross Pipes may also be installed using the bolted connection details.

(4) Match Cross Slope as shown elsewhere in the plans. Cross Slope of 6:1 or flatter is required for vehicle safety.

(5) Riprap placed beyond the limits shown will be paid as Concrete Riprap in accordance with Item 432, "Riprap".

(6) Quantities shown are for one end of one reinforced Concrete Pipe Culvert. For multiple pipe culverts or for Corrugated Metal Pipe Culverts, quantities will need to be adjusted. Riprap quantities are for Contractor's information only.

GENERAL NOTES:

Cross Pipes are designed for a traversing load of 10,000 pounds at yield as recommended by Research Report 280-2F, "Safety Treatment of Roadside Parallel-Drainage Structures", Texas Transportation Institute, March 1981.

Safety End Treatments shown herein are intended for use in those installations where out of control vehicles are likely to traverse the openings approximately perpendicular to the Cross Pipes.

Riprap and all necessary inverts shall be Concrete Riprap conforming to the requirements of Item 432, "Riprap".

Payment for riprap and toewall is included in the Price Bid for each Safety End Treatment.

Cross Pipes shall conform to the requirements of ASTM A53 (Type E or S, Grade B), ASTM A500 (Grade B), or API 5LX52.

Bolts and nuts shall conform to ASTM A307.

All steel components, except concrete reinforcing, shall be galvanized after fabrication. Galvanizing damaged during transport or construction shall be repaired in accordance with the specifications.

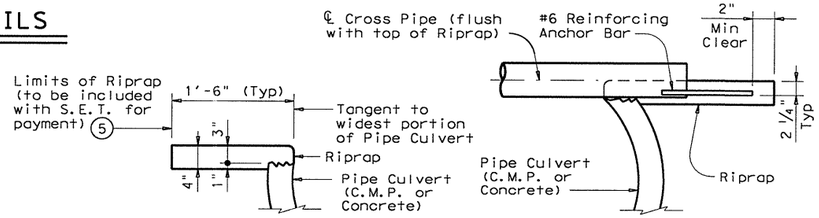

SHOWING TYPICAL PIPE CULVERT & RIPRAP

SHOWING CROSS PIPE WITH ANCHOR BAR

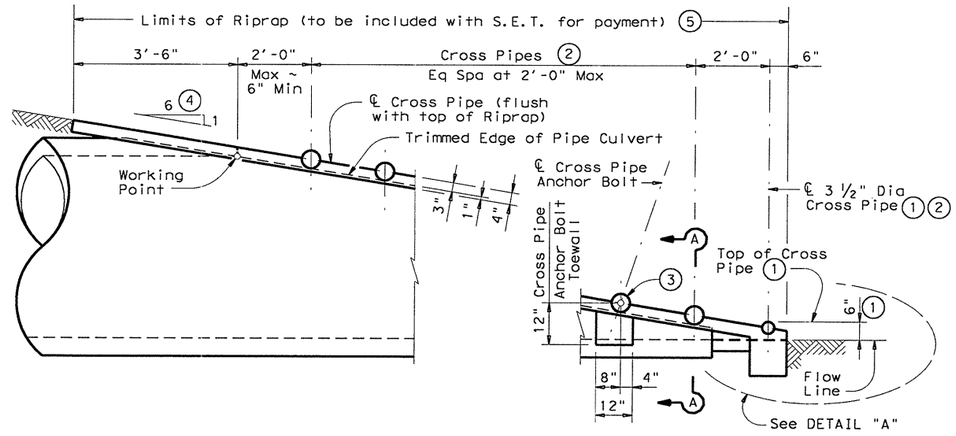

SIDE ELEVATION OF CAST-IN-PLACE CONCRETE

(Showing Concrete Pipe Culvert.)
(Details at Corrugated Metal Pipe Culvert are similar.)

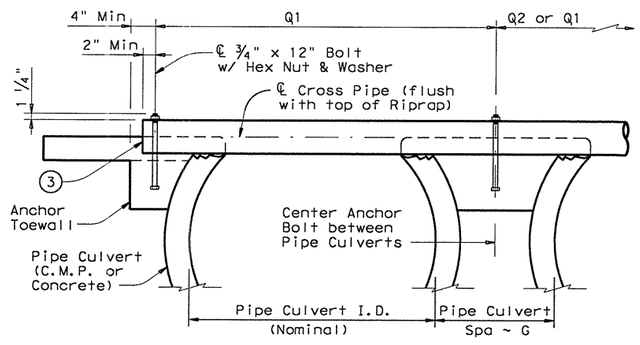

SHOWING CROSS PIPE WITH BOLTED ANCHOR

SECTION A-A

Texas Department of Transportation
Bridge Division

SAFETY END TREATMENT
FOR 12" DIA TO 72" DIA PIPE CULVERTS
TYPE II ~ PARALLEL DRAINAGE

SETP-PD

FILE: setppdse.dgn	DN: GAF	CK: CAT	DW: JRP	CK: GAF
©TxDOT December 2003	DISTRICT	FEDERAL AID PROJECT		SHEET
REVISIONS	AUS	CC 337-1-29		119
	COUNTY	CONTROL	SECT	JOB	HIGHWAY
	WILLIAMSON	0337	01	029	SH 29

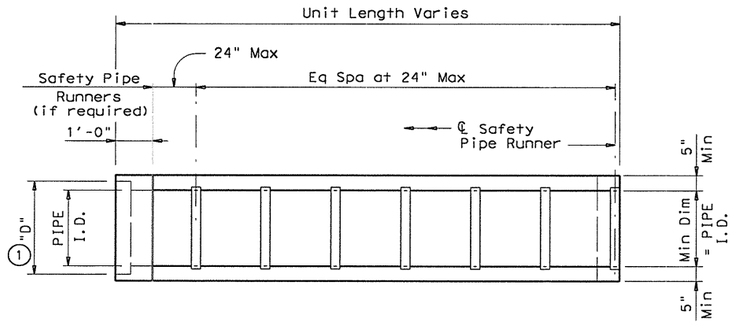

PLAN

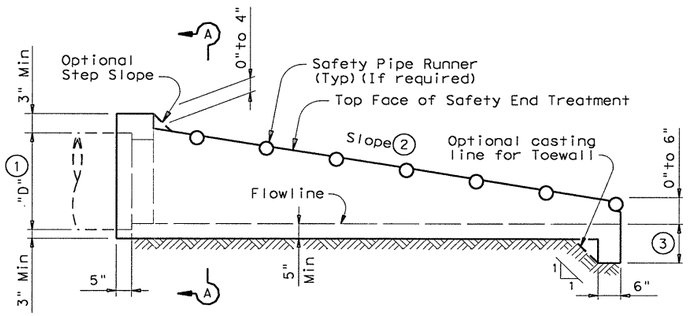

LONGITUDINAL ELEVATION

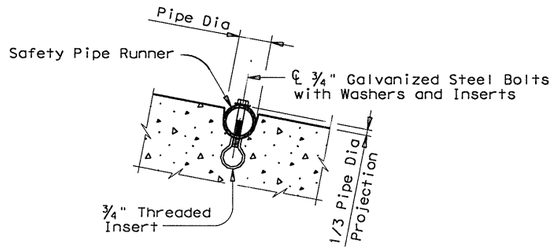

INSTALLATION DETAIL FOR SAFETY PIPE RUNNERS

(If required)

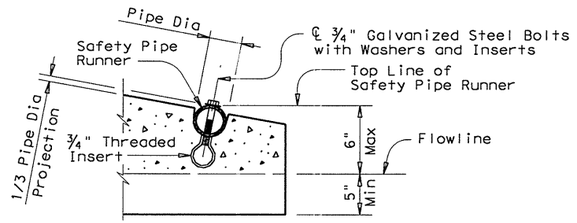

OPTION A

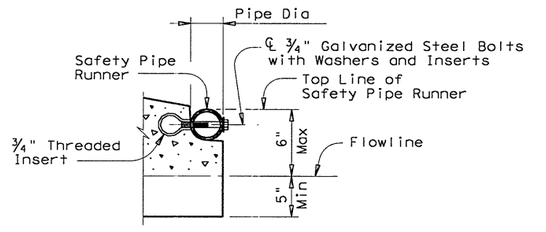

OPTION B

END DETAILS FOR INSTALLATION OF SAFETY PIPE RUNNERS

(If required)

PIPE I.D.	PIPE WALL "B" THICKNESS	(1) "D"	MAXIMUM SLOPE	MINIMUM LENGTH OF UNIT	PIPE RUNNERS REQUIRED		REQUIRED PIPE RUNNER SIZES		
					SINGLE PIPE	MULTIPLE PIPE	NOMINAL DIA.	O.D.	I.D.
12"	2"	17"	6:1	4'-9"	No	Yes, for >2 pipes	3" STD	3.500"	3.068"
15"	2 ¼"	20 ½"	6:1	6'-5"	No	Yes, for >2 pipes	3" STD	3.500"	3.068"
18"	2 ½"	24"	6:1	8'-0"	No	Yes, for >2 pipes	3" STD	3.500"	3.068"
24"	3"	31"	6:1	11'-3"	No	Yes, for >2 pipes	3" STD	3.500"	3.068"
30"	3 ½"	38 ½"	6:1	14'-8"	No	Yes	4" STD	4.500"	4.026"
36"	4"	45 ½"	6:1	17'-11"	Yes	Yes	4" STD	4.500"	4.026"
42"	4 ½"	52 ½"	6:1	21'-2"	Yes	Yes	4" STD	4.500"	4.026"

(1) Dimension "D" is based on ASTM C-76, Class III, Wall "B" thickness. If any other wall thickness is used, dimension "D" must be adjusted accordingly.

(2) Slope as shown elsewhere in the plans. Slope of 6:1 or flatter is required for vehicle safety.

(3) Toewall to be used only when dimension is shown elsewhere in the plans.

(4) The top 4" of void between Precast End Treatments shall be filled with concrete Riprap and shall be considered subsidiary to Safety End Treatment.

(5) Clear distance between pipes shall be adjusted to provide for the minimum distance between safety end treatments.

(6) Cement stabilized bedding and backfill shall be in accordance with the Item, "Excavation and Backfill for Structures". Bedding and backfill shall be considered subsidiary to the Item "Safety End Treatment". When concrete riprap is specified around the safety end treatment, backfill shall be as directed by Engineer.

GENERAL NOTES:

Precast safety end treatment for reinforced concrete pipe may be used for TYPE II end treatment as specified in Item "Safety End Treatment".

When Precast Safety End Treatment is used as a Contractor's alternate to mitered RCP, Riprap will not be required unless noted otherwise on the plans.

Manufacture of this product shall conform to requirements of Item "Safety End Treatment" except as noted below :

A. Minimum reinforcing shall be #4 at 6" (Grade 40) or #4 at 9" (Grade 60) each way or 6 x 6 - W12 x W12 or 5 x 5 - W10 x W10 welded wire fabric.

B. Concrete for precast (steel formed) sections shall be Class "C" with a minimum compressive strength of 3600 psi.

At the option and expense of the Contractor the next larger size of Safety End Treatment may be furnished; as long as the "D" dimension cast is that of the required size of pipe.

Pipe Runners are designed for a traversing load of 10,000 Lbs at yield as recommended by Research Report 280-2F, "Safety Treatment of Roadside Parallel-Drainage Structures", Texas Transportation Institute, March 1981.

Pipe Runners shall conform to the requirements of ASTM A53 (Type E or S, Grade B), ASTM A500 (Grade B), or API 5LX52.

All steel components except reinforcing, shall be galvanized after fabrication. Galvanizing damaged during transport or construction shall be repaired in accordance with the specifications.

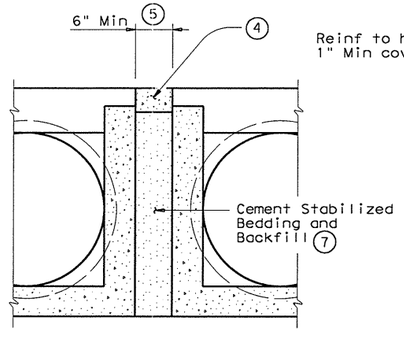

MULTIPLE PIPE INSTALLATION

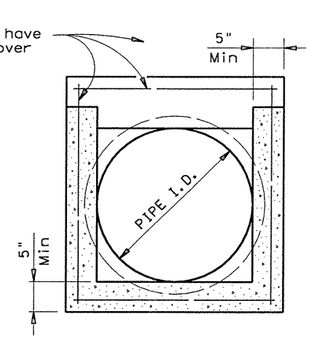

OPTION WITH SQUARE BOTTOM

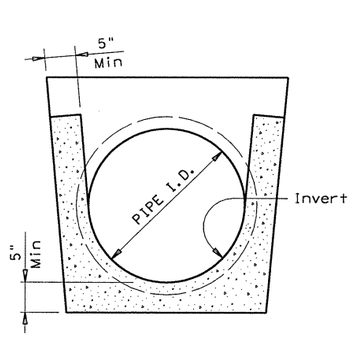

OPTION WITH INVERT BOTTOM

SECTION A-A

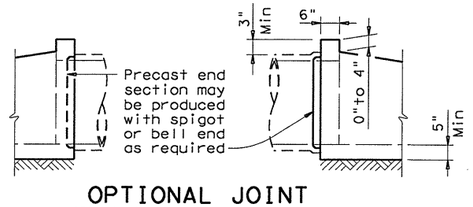

OPTIONAL JOINT

(Showing joint between RCP and Precast Safety End Treatment)

Texas Department of Transportation
Bridge Division

PRECAST SAFETY END TREATMENT

TYPE II ~ PARALLEL DRAINAGE

PSET-SP

FILE: psetspse.dgn	DN: RLW	CK: KLR	DW: JTR	CK: GAF
©TxDOT December 2003	DISTRICT	FEDERAL AID PROJECT		SHEET
REVISIONS	AUS	CC 337-1-29		120
	COUNTY	CONTROL	SECT	JOB	HIGHWAY
	WILLIAMSON	0337	01	029	SH 29

...\drainage\psetspse.dgn 09/21/2004 10:09:27 AM

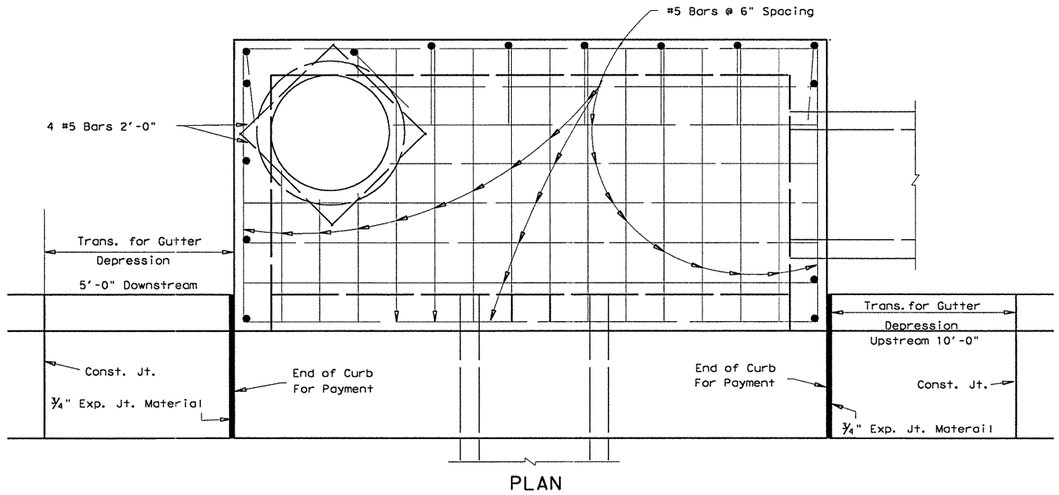

PLAN

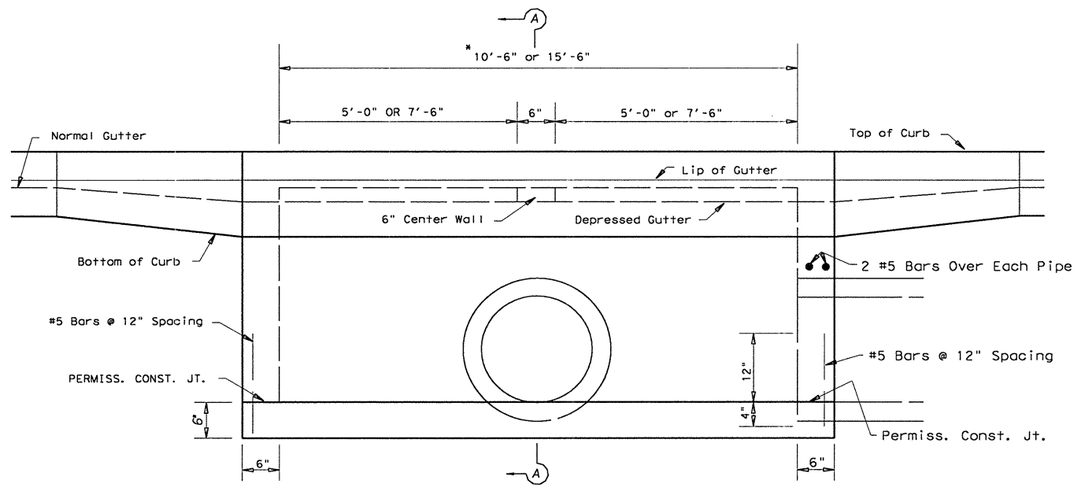

ELEVATION

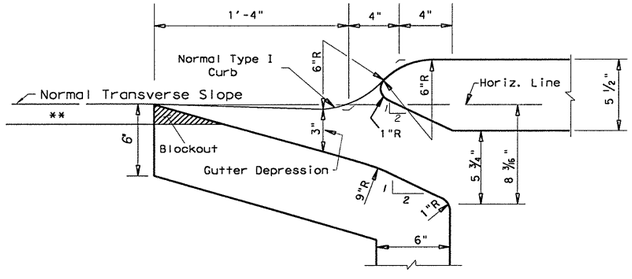

THROAT DETAILS FOR TYPE I CURB INLET

*20' Inlets will consist of two (2) 10' inlets side by side. This opening for flow between the two (2) inlets shall be the size of the outflow pipe.

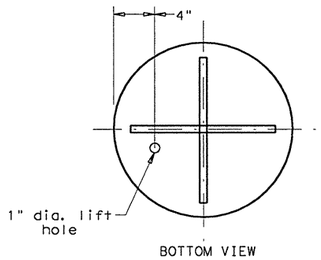

BOTTOM VIEW

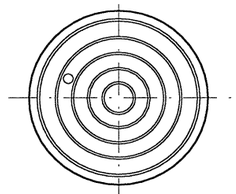

TOP VIEW

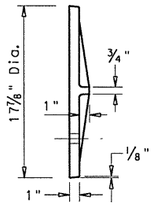

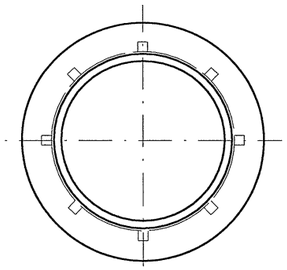

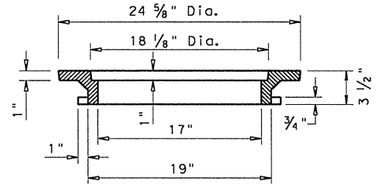

Approximate Weight 170 lbs.

RING AND COVER DETAILS

V-1846-1 or Equal

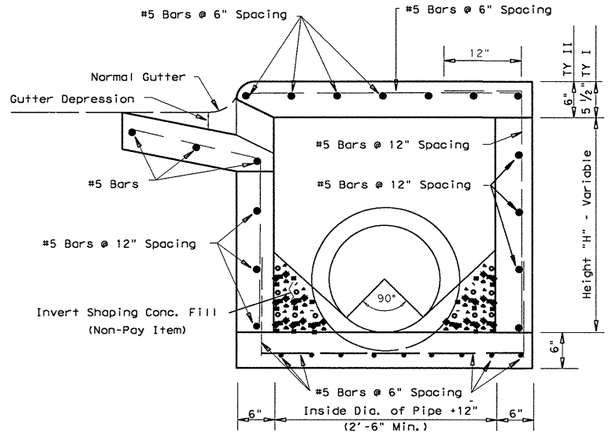

SECTION A-A

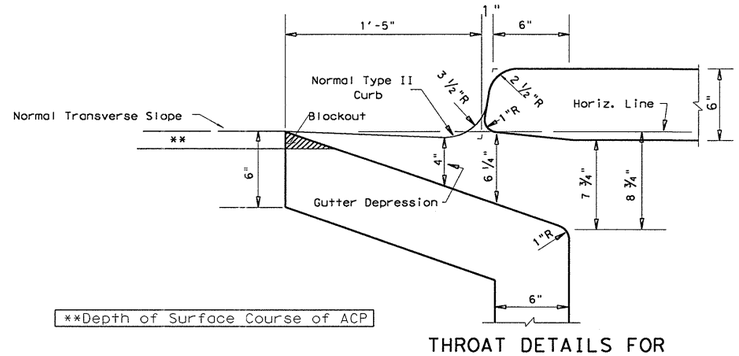

**Depth of Surface Course of ACP

THROAT DETAILS FOR TYPE II CURB INLET

GENERAL NOTES:

All concrete shall be class "A."

Manhole, Rings and Covers will be in accordance with Item 471, "Frames, Grates, Rings and Covers" except for measurement and payment. These items shall be considered subsidiary to the bid item for Curb Inlet. An alternate Frame and Cover will be accepted at the approval of the Engineer.

Where Inlets are proposed at existing Inlet locations, portions of the existing Inlet shall be utilized in the new construction as directed by the Engineer. All break-backs necessary to tie to new construction, and all removal of remaining portions of existing Inlet not be utilized, shall be considered subsidiary work to Item 465, "Manholes and Inlets."

Connecting pipes should enter within 10 degrees of normal to Inlet wall. If necessary, pipe elbow or curved approach alignment should be used to stay within this limit.

The Contractor shall provide gutter blockouts for the length of each Inlet for temporary drainage and shall be filled after final roadway paving. This work will not be paid for directly, but will be considered subsidiary to Item 465, "Manholes and Inlets."

Texas Department of Transportation
Austin District Design

CURB INLET DETAILS TYPES I & II

Austin District Standard

© TxDOT 2003

REVISIONS
3/03 District Update

DIST	FED REG	FEDERAL AID PROJECT #	SHEET
AUS	6	CC 337-1-29	121

COUNTY	CONTROL	SECT	JOB	HIGHWAY
WILLIAMSON	0337	01	029	SH 29

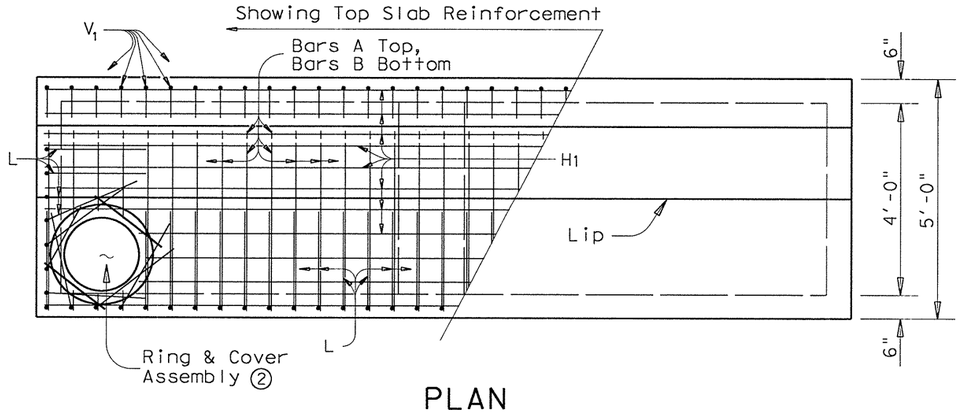

PLAN

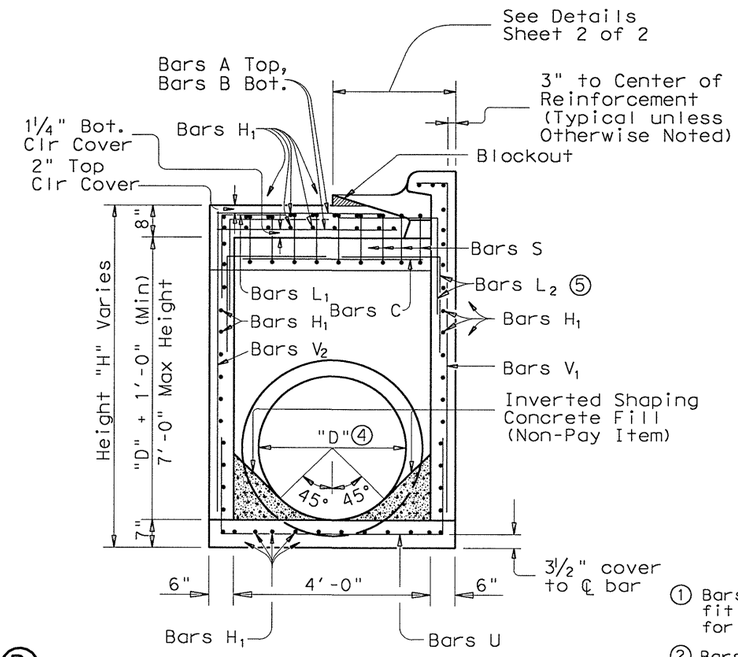

SECTION A-A

(1) Bars H_2 & V_3 shall be cut to fit as shown. Allow 3" for End Cover (Typical).

(2) Bars L shall be placed with Bars A, H, and V as shown at RCP, corners and Manhole Assembly. Manhole ring shall be placed such that interior opening aligns with inside faces of two corner walls. Contractor shall place 8 ~ #4 Bars as shown in Plan View around Ring Assembly to engage cut slab Bars A, B & H_1.

(3) Bars H shall be Cut as Required to accommodate Pipe Recess in Bottom Slab.

(4) "D" = Pipe Diameter

(5) Bars L_2 shall align with Beam Reinforcement Bars C and Top Slab Reinforcement (12 Bars L_2 Total)

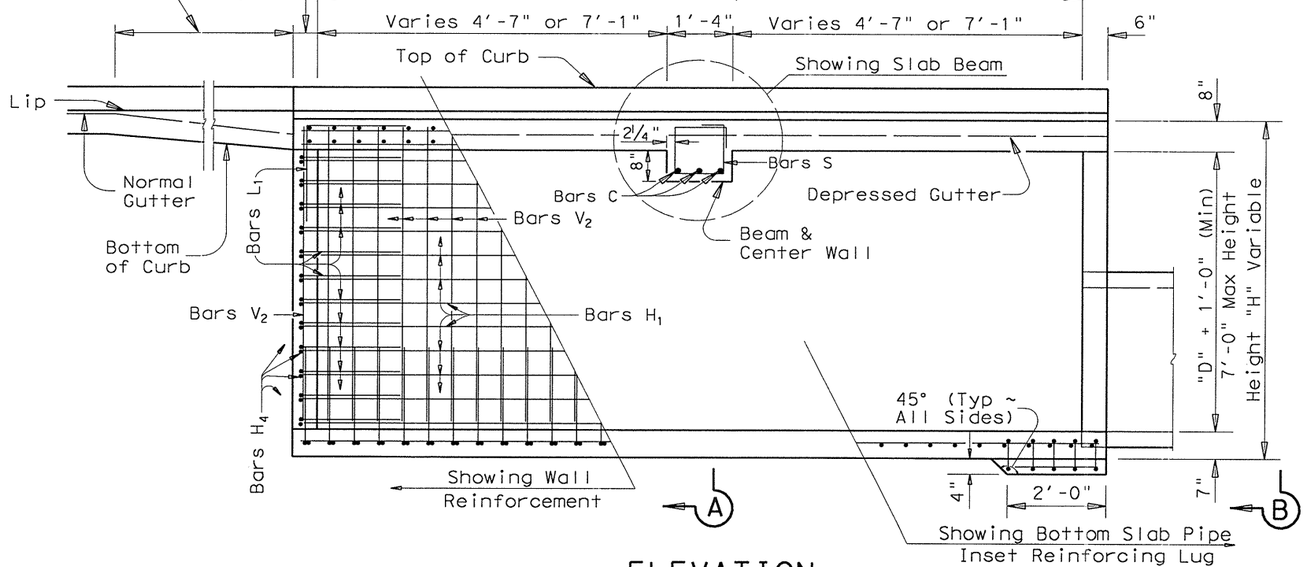

ELEVATION

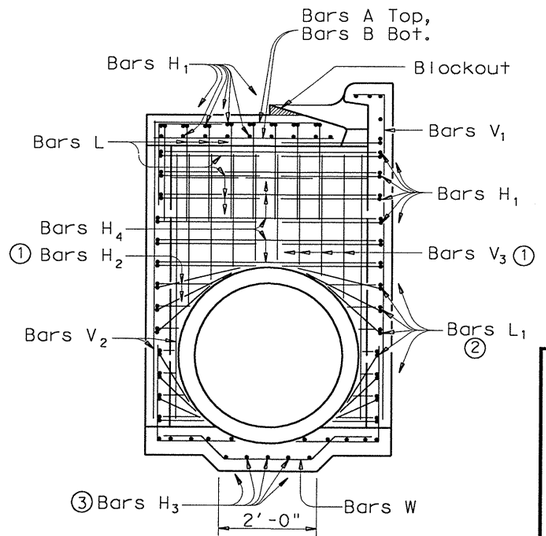

END VIEW B-B

HS20 LOADING

Sheet 1 of 2

Texas Department of Transportation
Austin District Design

CAST IN PLACE CURB INLET DETAILS TYPE IR & IIR

(FOR 36" DIA. RCP & SMALLER)

FILE: curb dt 36in.dgn	DN: RJC	CK: KAT	DW: KAT	CK: RJC
© TxDOT Aug. 2002	DISTRICT	FEDERAL AID PROJECT		SHEET
REVISIONS	AUS	CC 337-1-29		122
	COUNTY	CONTROL	SECT	JOB	HIGHWAY
	WILLIAMSON	0337	01	029	SH29

...\drainage\curbinlet136.dgn 09/21/2004 10:09:25 AM

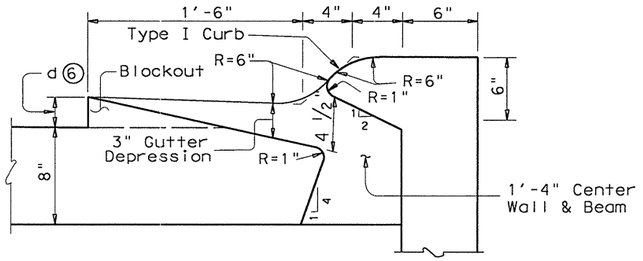

THROAT DETAILS TYPE IR INLETS

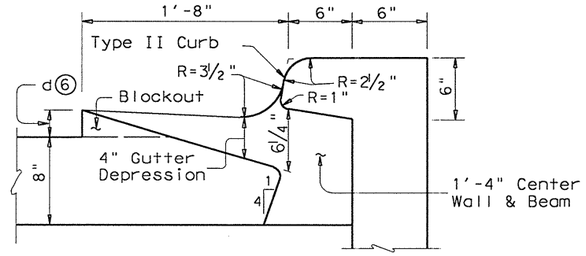

THROAT DETAILS TYPE IIR INLETS

BAR TABLE		
BAR	SIZE	MAX. SPA.
A	#5	5"
B	#5	5"
C	#8	As Shown
H_1	#5	6"
H_2	#5	6"
H_3	#5	6"
H_4	#5	6"
L_1	#5	6"
L_2	#8	As Shown
S	#4	5"
U	#5	6"
V_1	#5	6"
V_2	#5	6"
V_3	#5	6"
W	#5	6"

⑥ "d" = Depth of Overlay.

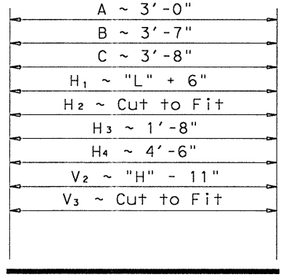

BARS A, B, C, H_1, H_2, H_3, H_4, V_2, & V_3

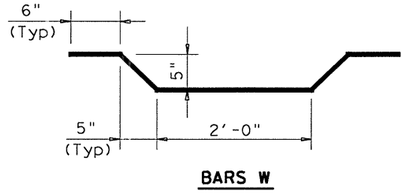

BARS W

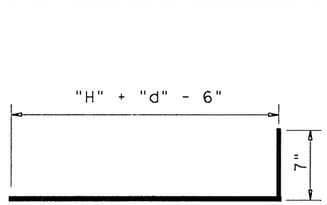

BARS V_1

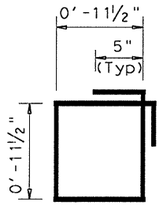

BARS S

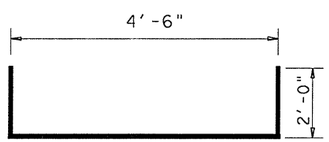

BARS U

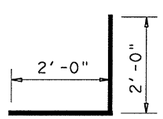

BARS L_1 &L_2

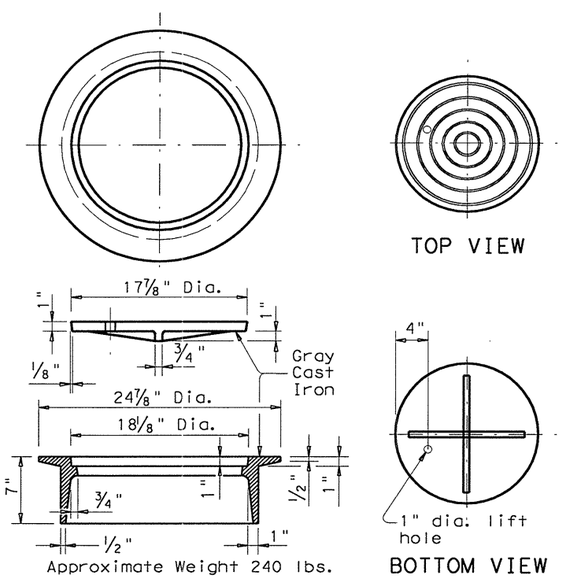

RING AND COVER DETAILS

GENERAL NOTES:

All concrete shall be Class "A"

Ring and cover shall conform to the requirements of AASHTO M306, "Standard Specification for Drainage Structure Castings". Materials shall conform to ASTM A48, Class 35B for gray iron castings or ASTM A536, Grade 65-45-12 for ductile iron castings. Aluminum alloy castings shall not be permitted. Ring and cover shall be considered subsidiary to the inlet bid item.

If two inlets are to be installed end to end, contractor shall install equivalent opening or pipe segment in end walls between boxes. Each end wall between inlet boxes shall be reinforced as shown for single box.

The Contractor may build inlets in stages so that base laying operations may be continuous over the top of the inlet. Any additional excavation required below finished base grade, within roadway limits, shall be backfilled with Class "B" Conc (Riprap).

Work or materials involved for inlet stage construction will not be paid for directly, but shall be considered subsidiary to the bid items involved.

Where inlets are proposed at existing inlet locations, portions of the existing inlet shall be utilized in the new construction as directed by the Engineer. All break-back necessary to provide for tie to new construction and all removal of remaining portions of existing inlet not to be utilized shall be considered subsidiary work to Item 465, "Manholes and Inlets."

Connecting pipes should enter within 10 degrees of normal to inlet wall. If necessary, pipe elbow or curved approach alignment should be used to stay within this limit.

The Contractor shall provide gutter blockout(s) for the length of each inlet for temporary drainage. Blockout(s) shall be filled after final roadway paving. This work will not be paid for directly, but will be considered subsidiary to Item 465, "Manholes and Inlets."

HS20 LOADING

Texas Department of Transportation
Austin District Design

CAST IN PLACE CURB INLET DETAILS TYPE IR & IIR

(FOR 36" DIA. RCP & SMALLER)

FILE: curb dt 36in.dgn	DN: RJC	CK: KAT	DW: KAT	CK: RJC		
© TxDOT Aug. 2002	DISTRICT	FEDERAL AID PROJECT			SHEET	
REVISIONS	AUS	CC 337-1-29			123	
	COUNTY		CONTROL	SECT	JOB	HIGHWAY
	WILLIAMSON		0337	01	629	SH29

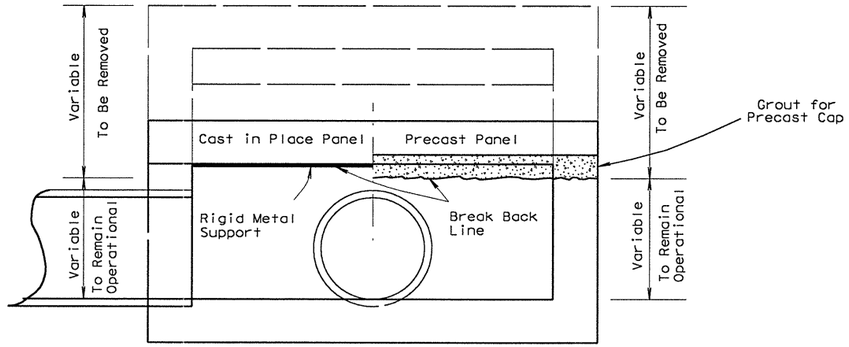

ELEVATION OF CAPPED INLET

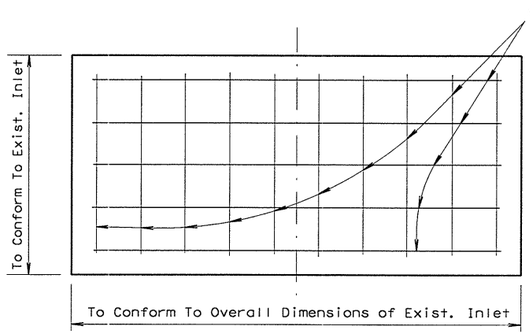

PLAN VIEW OF CAP

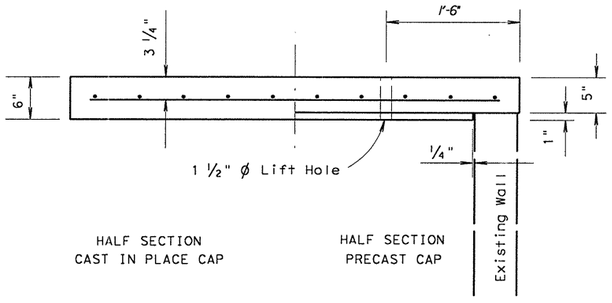

ELEVATION OF CAP

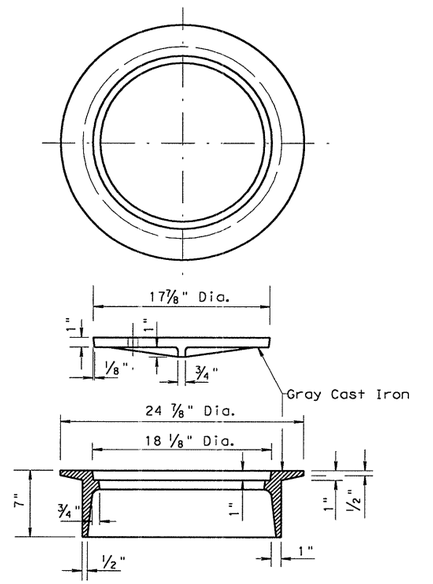

Approximate Weight 240 lbs.

RING AND COVER DETAILS

V-1846-2 or Equal

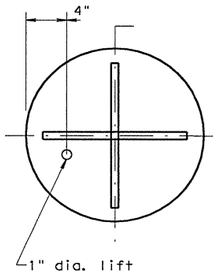

BOTTOM VIEW

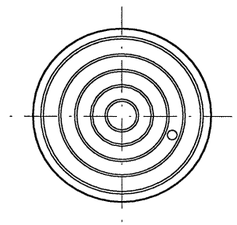

TOP VIEW

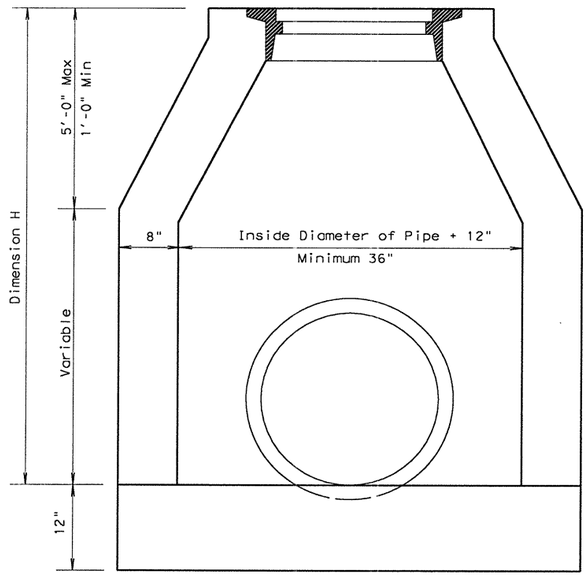

℄ SECTION OF MANHOLE

GENERAL NOTES :

All Concrete shall be Class "A".

Manhole walls shall be constructed of concrete sewer brick, precast concrete, or concrete blocks. Maximum size of concrete block shall be 8"x8"x16".

Existing inlets to be capped shall be fitted with either a precast or cast in place cap, as directed by the Engineer. Noncorroding rigid metal shall be used to form the bottom of the cast in place cap. The size and shape shall conform to the inside dimensions of the inlet and the form shall be suspended such that no inside support will be required.

Payment for existing inlets to be capped shall be in accordance with Item 479, "Adjusting Manholes and Inlets".

Inlets shown to be removed may be capped as directed by the Engineer.

Excavation and backfill, frames, grates, rings and covers will not be paid for directly but shall be considered subsidiary to Item 466, "Headwalls and Wingwalls" or Item 465, "Manholes and Inlets."

Connecting pipes should enter within 10 degrees of normal to inlet wall. If necessary, pipe elbow or curved approach alignment should be used to stay within this limit.

Alternate frame and cover may be used as approved by the Engineer.

Texas Department of Transportation
Austin District Design

MANHOLE TYPE A AND CAPPED INLET DETAILS

Austin District Standard

©TxDOT 2003

REVISIONS
3/03 District Update

DIST	FED REG	FEDERAL AID PROJECT #	SHEET
AUS	6	CC 337-1-29	124

COUNTY	CONTROL	SECT	JOB	HIGHWAY
WILLIAMSON	0337	01	029	SH 29

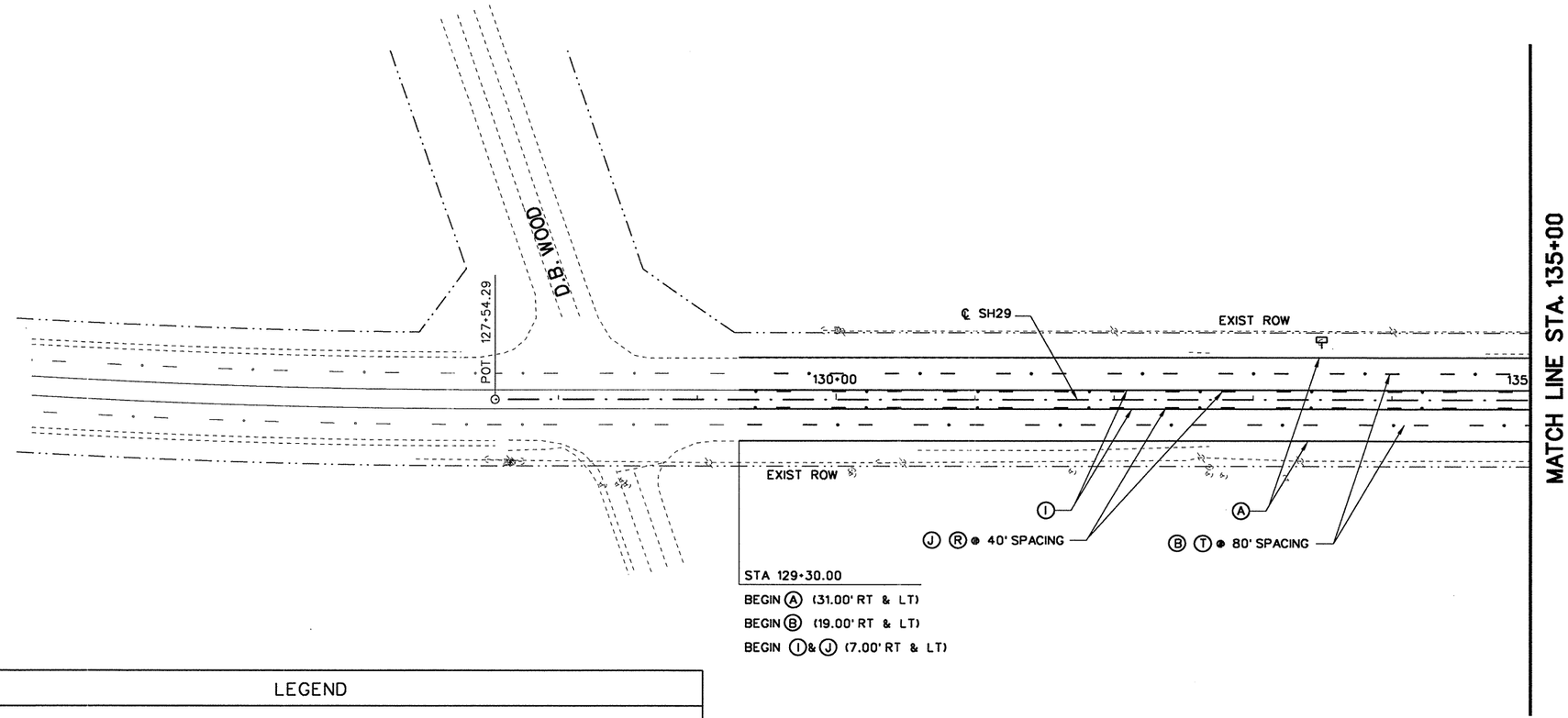

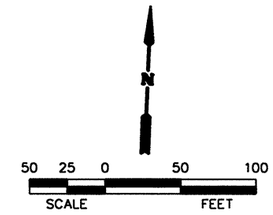

NOTES:

1. SIGN LOCATIONS ARE APPROXIMATE AND MAY BE ADJUSTED TO MEET ROADWAY CONDITIONS AS APPROVED BY THE ENGINEER.

2. SEE PROPOSED TYPICAL SECTION FOR LANE LINE OFFSETS.

3. ALL STATIONS REFER TO SH 29 UNLESS NOTED OTHERWISE.

LEGEND

(#)	PROPOSED SMALL SIGN NUMBER
	EXIST. SIGN TO BE REMOVED & RELOCATED
	SINGLE MAILBOX
	PROPOSED SMALL SIGN
	TY III BARRICADE
(A)	REFL PAV MRK TY I & TY II (W) (4") (SLD)
(B)	REFL PAV MRK TY I & TY II (W) (4") (BRK)
(C)	REFL PAV MRK TY I & TY II (W) (8") (SLD)
(D)	REFL PAV MRK TY I & TY II (W) (12") (SLD)
(E)	REFL PAV MRK TY I & TY II (W) (24") (SLD)
(F)	REFL PAV MRK TY I & TY II (W) (ARROW)
(G)	REFL PAV MRK TY I & TY II (W) (WORD)
(H)	REFL PAV MRK TY I & TY II (W) (8") (LNDP)
(I)	REFL PAV MRK TY I & TY II (Y) (4") (SLD)
(J)	REFL PAV MRK TY I & TY II (Y) (4") (BRK)
(L)	REFL PAV MRK TY I & TY II (Y) (8") (SLD)
(N)	REFL PAV MRK TY I & TY II (Y) (24") (SLD)
(Q)	RAIS PAV MRKR CL B (REFL) TY II-C-R
(R)	RAIS PAV MRKR CL B (REFL) TY II-A-A
(S)	REFL PAV MRK TY I & TY II (W) (4") (DOT)
(T)	RAIS PAV MRK CL B (REFL) TY I-C
20	OBJECT MARKER (OM-4R)
	DELINEATOR (D-SW) (A)
	PROPOSED MAILBOX ASSEMBLY (SINGLE)

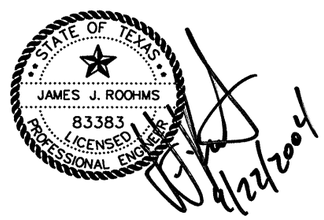

NO.	REVISION	BY	DATE

CP&Y Chiang, Patel & Yerby, Inc.

© 2004

Texas Department of Transportation

SH 29

SIGNING, STRIPING, DELINEATION & MBGF LAYOUT

BEGIN PROJECT TO STA. 135+00

Designed:	GJT	FED. ROAD DIV. NO.	STATE	FEDERAL AID PROJECT NO.				SHEET NO.
Checked:	SML	6	TEXAS	CC 337-1-29				125
Drawn:	GJT	STATE DIST. NO.	COUNTY		CONTROL NO.	SECTION NO.	JOB NO.	HIGHWAY NO.
Checked:	SML	14	WILLIAMSON		0337	01	029	SH 29

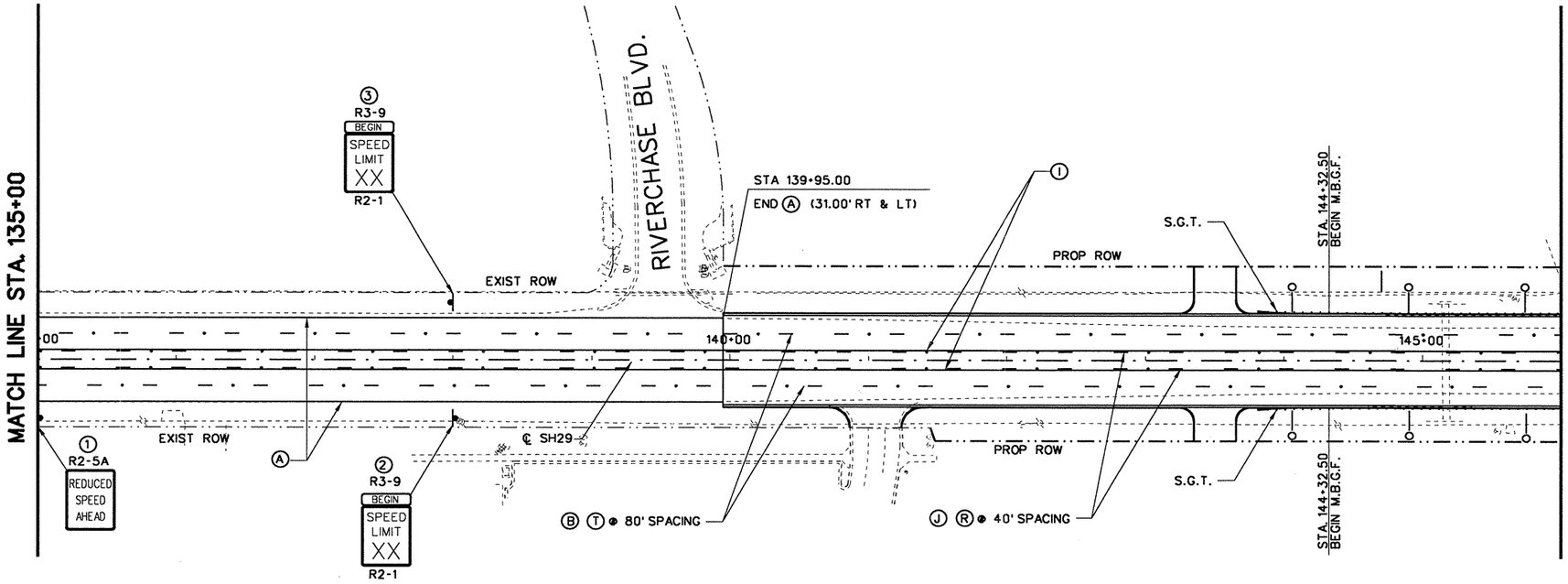

N

50 25 0 50 100
SCALE FEET

NOTES:

SEE SHEET 1 OF 8

LEGEND

(#)	PROPOSED SMALL SIGN NUMBER
	EXIST. SIGN TO BE REMOVED & RELOCATED
	SINGLE MAILBOX
	PROPOSED SMALL SIGN
	TY III BARRICADE
(A)	REFL PAV MRK TY I& TY II (W) (4") (SLD)
(B)	REFL PAV MRK TY I& TY II (W) (4") (BRK)
(C)	REFL PAV MRK TY I& TY II (W) (8") (SLD)
(D)	REFL PAV MRK TY I& TY II (W) (12") (SLD)
(E)	REFL PAV MRK TY I& TY II (W) (24") (SLD)
(F)	REFL PAV MRK TY I& TY II (W) (ARROW)
(G)	REFL PAV MRK TY I& TY II (W) (WORD)
(H)	REFL PAV MRK TY I& TY II (W) (8") (LNDP)
(I)	REFL PAV MRK TY I& TY II (Y) (4") (SLD)
(J)	REFL PAV MRK TY I& TY II (Y) (4") (BRK)
(L)	REFL PAV MRK TY I& TY II (Y) (8") (SLD)
(N)	REFL PAV MRK TY I& TY II (Y) (24") (SLD)
(Q)	RAIS PAV MRKR CL B (REFL) TY II-C-R
(R)	RAIS PAV MRKR CL B (REFL) TY II-A-A
(S)	REFL PAV MRK TY I& TY II (W) (4") (DOT)
(T)	RAIS PAV MRK CL B (REFL) TY I-C
30	OBJECT MARKER (OM-4R)
	DELINEATOR (D-SW) (A)
	PROPOSED MAILBOX ASSEMBLY (SINGLE)

STATE OF TEXAS
JAMES J. ROOHMS
83383
LICENSED
PROFESSIONAL ENGINEER
4/22/2004

NO.	REVISION	BY	DATE

CP&Y Chiang, Patel & Yerby, Inc.

© 2004

Texas Department of Transportation

SH 29

SIGNING, STRIPING, DELINEATION & MBGF LAYOUT

STA. 135+00 TO STA. 146+00

Designed:	GJT	FED. ROAD DIV. NO.	STATE	FEDERAL AID PROJECT NO.				SHEET NO.
Checked:	SML	6	TEXAS	CC 337-1-29				126
Drawn:	GJT	STATE DIST. NO.	COUNTY		CONTROL NO.	SECTION NO.	JOB NO.	HIGHWAY NO.
Checked:	SML	14	WILLIAMSON		0337	01	029	SH 29

...\wa3\west\common\533wsp02.100 09/21/2004 04:18:07 PM

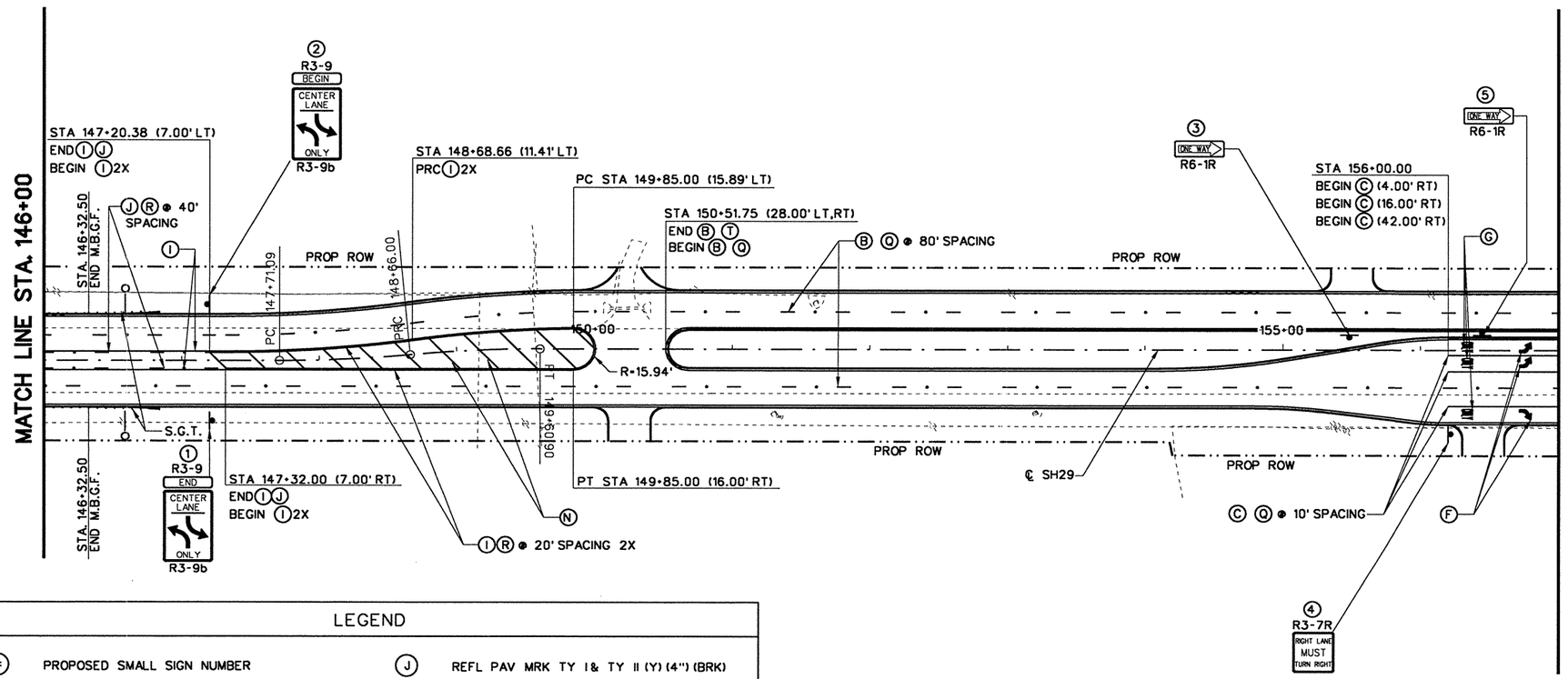

LEGEND

(#)	PROPOSED SMALL SIGN NUMBER	(J)	REFL PAV MRK TY I & TY II (Y) (4") (BRK)
	EXIST. SIGN TO BE REMOVED & RELOCATED	(L)	REFL PAV MRK TY I & TY II (Y) (8") (SLD)
	SINGLE MAILBOX	(N)	REFL PAV MRK TY I & TY II (Y) (24") (SLD)
	PROPOSED SMALL SIGN	(Q)	RAIS PAV MRKR CL B (REFL) TY II-C-R
	TY III BARRICADE	(R)	RAIS PAV MRKR CL B (REFL) TY II-A-A
(A)	REFL PAV MRK TY I & TY II (W) (4") (SLD)	(S)	REFL PAV MRK TY I & TY II (W) (4") (DOT)
(B)	REFL PAV MRK TY I & TY II (W) (4") (BRK)	(T)	RAIS PAV MRK CL B (REFL) TY I-C
(C)	REFL PAV MRK TY I & TY II (W) (8") (SLD)	20	OBJECT MARKER (OM-4R)
(D)	REFL PAV MRK TY I & TY II (W) (12") (SLD)		DELINEATOR (D-SW) (A)
(E)	REFL PAV MRK TY I & TY II (W) (24") (SLD)		PROPOSED MAILBOX ASSEMBLY (SINGLE)
(F)	REFL PAV MRK TY I & TY II (W) (ARROW)		
(G)	REFL PAV MRK TY I & TY II (W) (WORD)		
(H)	REFL PAV MRK TY I & TY II (W) (8") (LNDP)		
(I)	REFL PAV MRK TY I & TY II (Y) (4") (SLD)		

N

50 25 0 50 100
SCALE FEET

NOTES:

SEE SHEET 1 OF 8

STATE OF TEXAS
JAMES J. ROOHMS
83383
LICENSED
PROFESSIONAL ENGINEER
9/22/2004

NO.	REVISION	BY	DATE

CP&Y Chiang, Patel & Yerby, Inc.

© 2004

Texas Department of Transportation

SH 29

SIGNING, STRIPING, DELINEATION & MBGF LAYOUT

STA. 146+00 TO STA. 157+00

Designed:	GJT	FED. ROAD DIV. NO.	STATE	FEDERAL AID PROJECT NO.				SHEET NO.
Checked:	SML	6	TEXAS	CC 337-1-29				127
Drawn:	GJT	STATE DIST. NO.	COUNTY	CONTROL NO.	SECTION NO.	JOB NO.	HIGHWAY NO.	
Checked:	SML	14	WILLIAMSON	0337	01	029	SH 29	

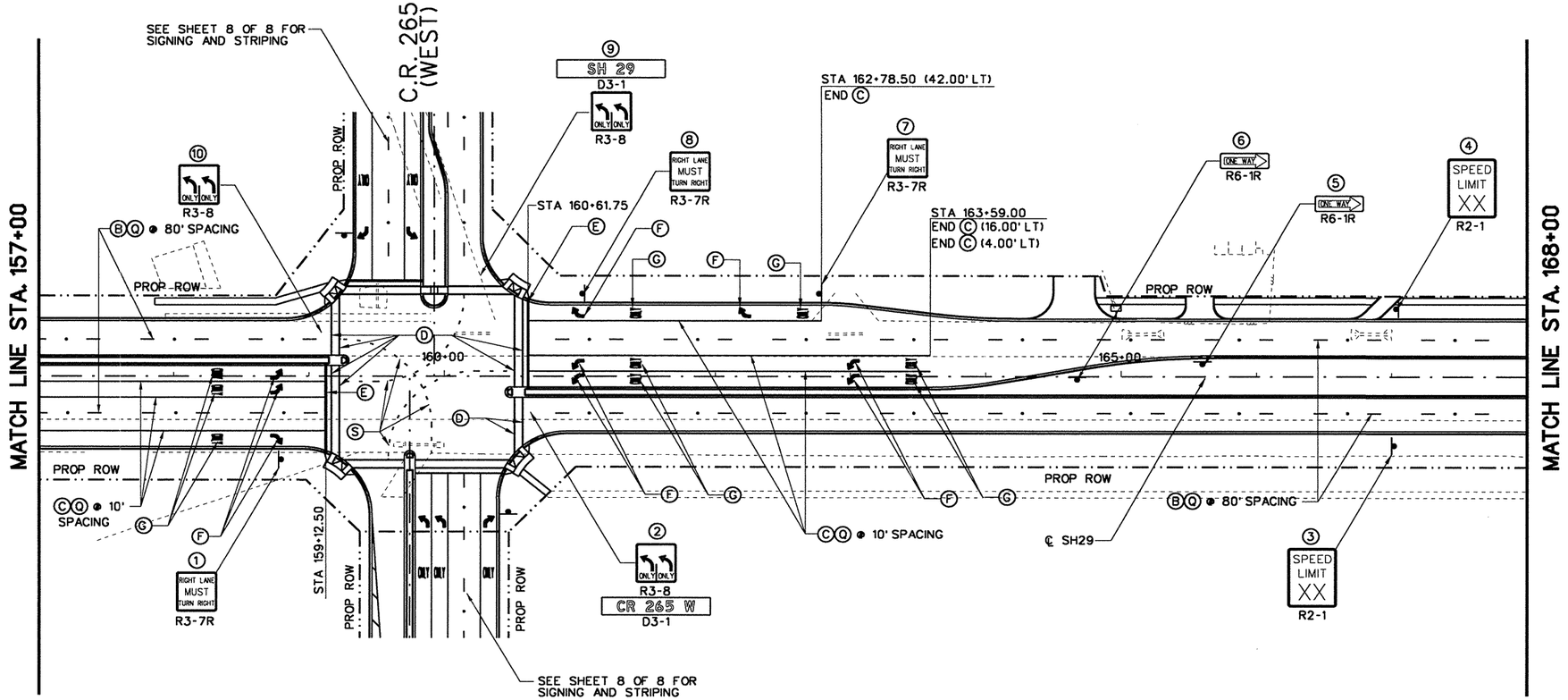

50 25 0 50 100
SCALE FEET

NOTES:

SEE SHEET 1 OF 8

LEGEND

(#)	PROPOSED SMALL SIGN NUMBER
	EXIST. SIGN TO BE REMOVED & RELOCATED
	SINGLE MAILBOX
	PROPOSED SMALL SIGN
	TY III BARRICADE
(A)	REFL PAV MRK TY I& TY II (W) (4") (SLD)
(B)	REFL PAV MRK TY I& TY II (W) (4") (BRK)
(C)	REFL PAV MRK TY I& TY II (W) (8") (SLD)
(D)	REFL PAV MRK TY I& TY II (W) (12") (SLD)
(E)	REFL PAV MRK TY I& TY II (W) (24") (SLD)
(F)	REFL PAV MRK TY I& TY II (W) (ARROW)
(G)	REFL PAV MRK TY I& TY II (W) (WORD)
(H)	REFL PAV MRK TY I& TY II (W) (8") (LNDP)
(I)	REFL PAV MRK TY I& TY II (Y) (4") (SLD)
(J)	REFL PAV MRK TY I& TY II (Y) (4") (BRK)
(L)	REFL PAV MRK TY I& TY II (Y) (8") (SLD)
(N)	REFL PAV MRK TY I& TY II (Y) (24") (SLD)
(Q)	RAIS PAV MRKR CL B (REFL) TY II-C-R
(R)	RAIS PAV MRKR CL B (REFL) TY II-A-A
(S)	REFL PAV MRK TY I& TY II (W) (4") (DOT)
(T)	RAIS PAV MRK CL B (REFL) TY I-C
OM-4R	OBJECT MARKER (OM-4R)
	DELINEATOR (D-SW) (A)
	PROPOSED MAILBOX ASSEMBLY (SINGLE)

STATE OF TEXAS
JAMES J. ROCHMES II
83383
LICENSED
PROFESSIONAL ENGINEER
9/22/2004

NO.	REVISION	BY	DATE

CP&Y Chiang, Patel & Yerby, Inc.

© 2004

Texas Department of Transportation

SH 29

SIGNING, STRIPING DELINEATION & MBGF LAYOUT

STA. 157+00 TO STA. 168+00

Designed:	GJT	FED. ROAD DIV. NO.	STATE	FEDERAL AID PROJECT NO.					SHEET NO.
Checked:	SML	6	TEXAS	CC 337-1-29					128
Drawn:	GJT	STATE DIST. NO.	COUNTY		CONTROL NO.	SECTION NO.	JOB NO.	HIGHWAY NO.	
Checked:	SML	14	WILLIAMSON		0337	01	029	SH 29	

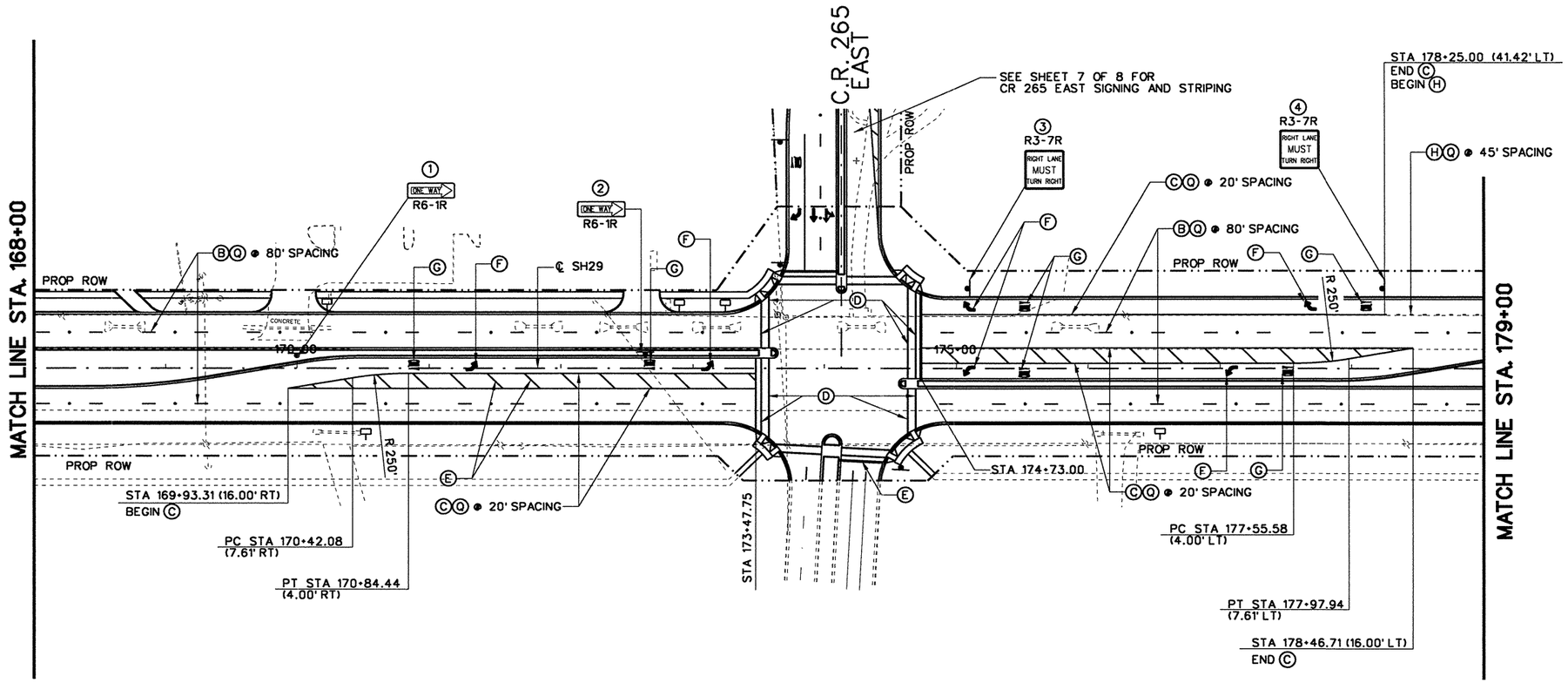



NOTES:

SEE SHEET 1 OF 8

LEGEND

(#)	PROPOSED SMALL SIGN NUMBER
	EXIST. SIGN TO BE REMOVED & RELOCATED
	SINGLE MAILBOX
	PROPOSED SMALL SIGN
	TY III BARRICADE
Ⓐ	REFL PAV MRK TY I & TY II (W) (4") (SLD)
Ⓑ	REFL PAV MRK TY I & TY II (W) (4") (BRK)
Ⓒ	REFL PAV MRK TY I & TY II (W) (8") (SLD)
Ⓓ	REFL PAV MRK TY I & TY II (W) (12") (SLD)
Ⓔ	REFL PAV MRK TY I & TY II (W) (24") (SLD)
Ⓕ	REFL PAV MRK TY I & TY II (W) (ARROW)
Ⓖ	REFL PAV MRK TY I & TY II (W) (WORD)
Ⓗ	REFL PAV MRK TY I & TY II (W) (8") (LNDP)
Ⓘ	REFL PAV MRK TY I & TY II (Y) (4") (SLD)
Ⓙ	REFL PAV MRK TY I & TY II (Y) (4") (BRK)
Ⓛ	REFL PAV MRK TY I & TY II (Y) (8") (SLD)
Ⓝ	REFL PAV MRK TY I & TY II (Y) (24") (SLD)
Ⓠ	RAIS PAV MRKR CL B (REFL) TY II-C-R
Ⓡ	RAIS PAV MRKR CL B (REFL) TY II-A-A
Ⓢ	REFL PAV MRK TY I & TY II (W) (4") (DOT)
Ⓣ	RAIS PAV MRK CL B (REFL) TY I-C
	OBJECT MARKER (OM-4R)
	DELINEATOR (D-SW) (A)
	PROPOSED MAILBOX ASSEMBLY (SINGLE)

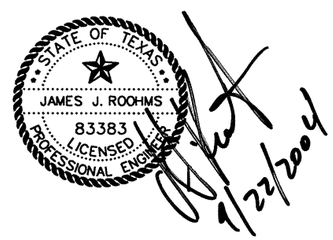

NO.	REVISION	BY	DATE

CP&Y Chiang, Patel & Yerby, Inc.

© 2004

Texas Department of Transportation

SH 29

SIGNING, STRIPING, DELINIATION & MBGF LAYOUT

STA. 168+00 TO STA. 179+00

		FED. ROAD DIV. NO.	STATE	FEDERAL AID PROJECT NO.			SHEET NO.
Designed:	GJT	6	TEXAS	CC 337-1-29			129
Checked:	SML	STATE DIST. NO.	COUNTY	CONTROL NO.	SECTION NO.	JOB NO.	HIGHWAY NO.
Drawn:	GJT	14	WILLIAMSON	0337	01	029	SH 29
Checked:	SML						

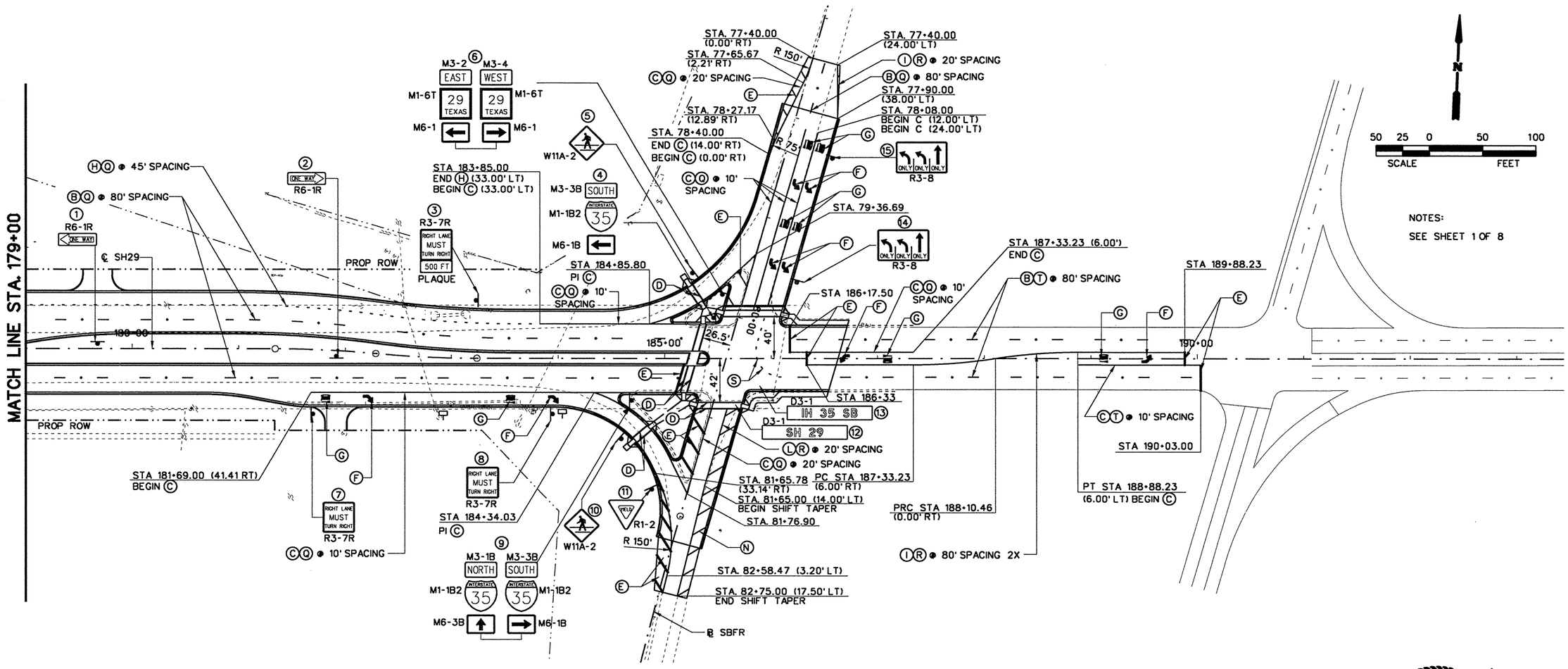

LEGEND

(#)	PROPOSED SMALL SIGN NUMBER
	EXIST. SIGN TO BE REMOVED & RELOCATED
	SINGLE MAILBOX
	PROPOSED SMALL SIGN
	TY III BARRICADE
(A)	REFL PAV MRK TY I& TY II (W) (4") (SLD)
(B)	REFL PAV MRK TY I& TY II (W) (4") (BRK)
(C)	REFL PAV MRK TY I& TY II (W) (8") (SLD)
(D)	REFL PAV MRK TY I& TY II (W) (12") (SLD)
(E)	REFL PAV MRK TY I& TY II (W) (24") (SLD)
(F)	REFL PAV MRK TY I& TY II (W) (ARROW)
(G)	REFL PAV MRK TY I& TY II (W) (WORD)
(H)	REFL PAV MRK TY I& TY II (W) (8") (LNDP)
(I)	REFL PAV MRK TY I& TY II (Y) (4") (SLD)
(J)	REFL PAV MRK TY I& TY II (Y) (4") (BRK)
(L)	REFL PAV MRK TY I& TY II (Y) (8") (SLD)
(N)	REFL PAV MRK TY I& TY II (Y) (24") (SLD)
(Q)	RAIS PAV MRKR CL B (REFL) TY II-C-R
(R)	RAIS PAV MRKR CL B (REFL) TY II-A-A
(S)	REFL PAV MRK TY I& TY II (W) (4") (DOT)
(T)	RAIS PAV MRK CL B (REFL) TY I-C
	OBJECT MARKER (OM-4R)
	DELINEATOR (D-SW) (A)
	PROPOSED MAILBOX ASSEMBLY (SINGLE)

STATE OF TEXAS
JAMES J. ROOHMS
83383
LICENSED
PROFESSIONAL ENGINEER
9/22/2004

NO.	REVISION	BY	DATE

CP&Y Chiang, Patel & Yerby, Inc.

© 2004

Texas Department of Transportation

SH 29

SIGNING, STRIPING, DELINEATION & MBGF LAYOUT

STA. 179+00 TO END PROJECT

		FED. ROAD DIV. NO.	STATE	FEDERAL AID PROJECT NO.	SHEET NO.
Designed:	GJT	6	TEXAS	CC 337-1-29	130
Checked:	SML				

		STATE DIST. NO.	COUNTY	CONTROL NO.	SECTION NO.	JOB NO.	HIGHWAY NO.
Drawn:	GJT	14	WILLIAMSON	0337	01	029	SH 29
Checked:	SML						

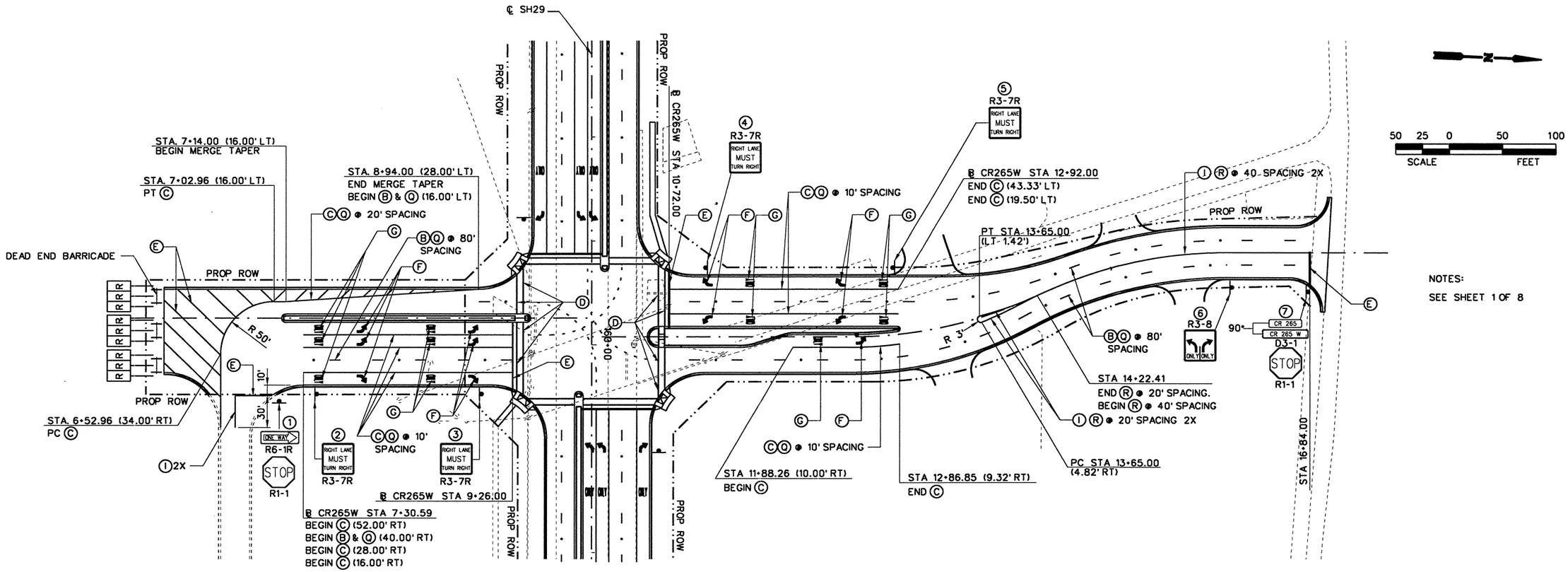

NOTES:

SEE SHEET 1 OF 8

LEGEND

(#)	PROPOSED SMALL SIGN NUMBER
	EXIST. SIGN TO BE REMOVED & RELOCATED
	SINGLE MAILBOX
	PROPOSED SMALL SIGN
	TY III BARRICADE
Ⓐ	REFL PAV MRK TY I & TY II (W) (4") (SLD)
Ⓑ	REFL PAV MRK TY I & TY II (W) (4") (BRK)
Ⓒ	REFL PAV MRK TY I & TY II (W) (8") (SLD)
Ⓓ	REFL PAV MRK TY I & TY II (W) (12") (SLD)
Ⓔ	REFL PAV MRK TY I & TY II (W) (24") (SLD)
Ⓕ	REFL PAV MRK TY I & TY II (W) (ARROW)
Ⓖ	REFL PAV MRK TY I & TY II (W) (WORD)
Ⓗ	REFL PAV MRK TY I & TY II (W) (8") (LNDP)
Ⓘ	REFL PAV MRK TY I & TY II (Y) (4") (SLD)
Ⓙ	REFL PAV MRK TY I & TY II (Y) (4") (BRK)
Ⓛ	REFL PAV MRK TY I & TY II (Y) (8") (SLD)
Ⓝ	REFL PAV MRK TY I & TY II (Y) (24") (SLD)
Ⓠ	RAIS PAV MRKR CL B (REFL) TY II-C-R
Ⓡ	RAIS PAV MRKR CL B (REFL) TY II-A-A
Ⓢ	REFL PAV MRK TY I & TY II (W) (4") (DOT)
Ⓣ	RAIS PAV MRK CL B (REFL) TY I-C
	OBJECT MARKER (OM-4R)
	DELINEATOR (D-SW) (A)
	PROPOSED MAILBOX ASSEMBLY (SINGLE)

STATE OF TEXAS
JAMES J. ROOHMS
83383
LICENSED
PROFESSIONAL ENGINEER
9/22/2004

NO.	REVISION	BY	DATE

© 2004

CP&Y Chiang, Patel & Yerby, Inc.

Texas Department of Transportation

SH 29

SIGNING, STRIPING, DELINEATION & MBGF LAYOUT

CR 265 WEST

		FED. ROAD DIV. NO.	STATE	FEDERAL AID PROJECT NO.			SHEET NO.
Designed:	GJT	6	TEXAS	CC 337-1-29			121
Checked:	SML	STATE DIST. NO.	COUNTY	CONTROL NO.	SECTION NO.	JOB NO.	HIGHWAY NO.
Drawn:	GJT	14	WILLIAMSON	0337	01	029	SH 29
Checked:	SML						

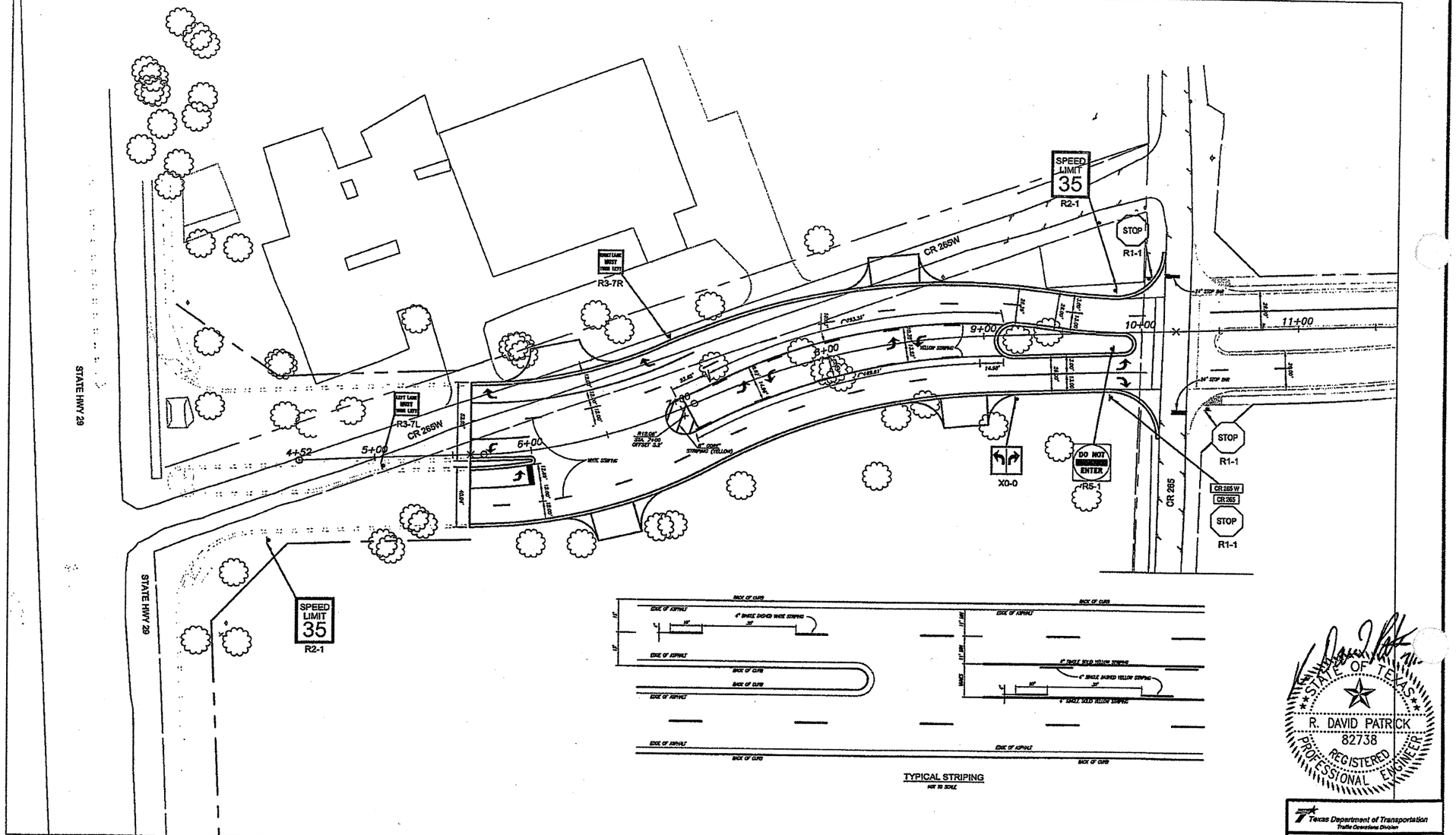

TYPICAL STRIPING
NOT TO SCALE

STRIPING & SIGN LAYOUT

0 25 50
GRAPHIC SCALE IN FEET

NORTH

STATE OF TEXAS
R. DAVID PATRICK
82738
REGISTERED
PROFESSIONAL ENGINEER

Texas Department of Transportation
Traffic Operations Division

KASBERG, PATRICK & ASSOCIATES, L.L.P.
CONSULTING ENGINEERS
TEMPLE, TEXAS 76501

FED.RD. DIV.NO.	AID PROJECT NO.		SHEET NO.
6	CC-337-1-29		13a
STATE	DIST.	COUNTY	
TEXAS	14	WILLIAMSON	
CONT.	SECT.	JOB	HIGHWAY NO.
337	1	29	CR265 - SH29

C.O.#6

P:\Georgetown\2004\2004-120-22\cadd\revisions\7-11\PP-04.dwg

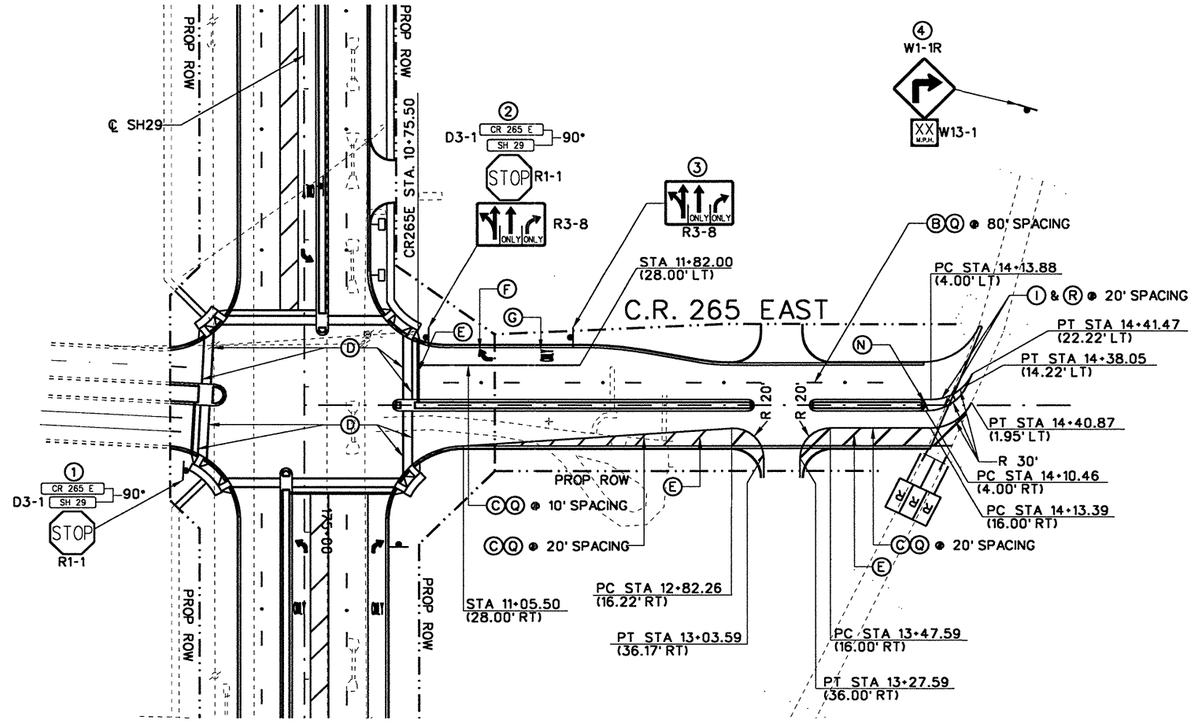

50 25 0 50 100
SCALE FEET

NOTES:

SEE SHEET 1 OF 8

LEGEND

(#)	PROPOSED SMALL SIGN NUMBER	(J)	REFL PAV MRK TY I & TY II (Y) (4") (BRK)
	EXIST. SIGN TO BE REMOVED & RELOCATED	(L)	REFL PAV MRK TY I & TY II (Y) (8") (SLD)
	SINGLE MAILBOX	(N)	REFL PAV MRK TY I & TY II (Y) (24") (SLD)
	PROPOSED SMALL SIGN	(Q)	RAIS PAV MRKR CL B (REFL) TY II-C-R
	TY III BARRICADE	(R)	RAIS PAV MRKR CL B (REFL) TY II-A-A
(A)	REFL PAV MRK TY I & TY II (W) (4") (SLD)	(S)	REFL PAV MRK TY I & TY II (W) (4") (DOT)
(B)	REFL PAV MRK TY I & TY II (W) (4") (BRK)	(T)	RAIS PAV MRK CL B (REFL) TY I-C
(C)	REFL PAV MRK TY I & TY II (W) (8") (SLD)		OBJECT MARKER (OM-4R)
(D)	REFL PAV MRK TY I & TY II (W) (12") (SLD)		DELINEATOR (D-SW) (A)
(E)	REFL PAV MRK TY I & TY II (W) (24") (SLD)		PROPOSED MAILBOX ASSEMBLY (SINGLE)
(F)	REFL PAV MRK TY I & TY II (W) (ARROW)		
(G)	REFL PAV MRK TY I & TY II (W) (WORD)		
(H)	REFL PAV MRK TY I & TY II (W) (8") (LNDP)		
(I)	REFL PAV MRK TY I & TY II (Y) (4") (SLD)		

STATE OF TEXAS
JAMES J. ROOHMS
83383
LICENSED
PROFESSIONAL ENGINEER
9/22/2004

NO.	REVISION	BY	DATE

CP&Y Chiang, Patel & Yerby, Inc.

© 2004

Texas Department of Transportation

SH 29

SIGNING, STRIPING, DELINEATION & MBGF LAYOUT

CR 265 EAST

Designed:	GJT	FED. ROAD DIV. NO.	STATE	FEDERAL AID PROJECT NO.				SHEET NO.
Checked:	SML	6	TEXAS	CC 337-1-29				132
Drawn:	GJT	STATE DIST. NO.	COUNTY		CONTROL NO.	SECTION NO.	JOB NO.	HIGHWAY NO.
Checked:	SML	14	WILLIAMSON		0337	01	029	SH 29

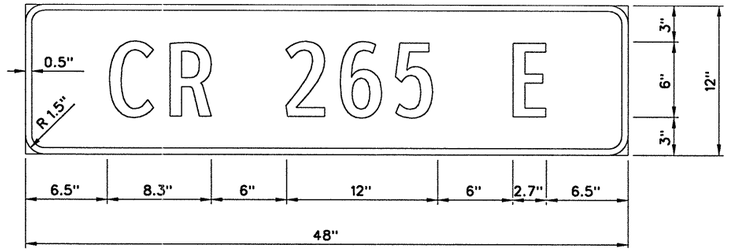

SIGN NO.: 4,1,2
SHEET NO.: 5,7 OF 8
BACKGROUND: GREEN
FONT: 6CV-2W
MOUNTING: SEE SMALL SIGN SUMMARY

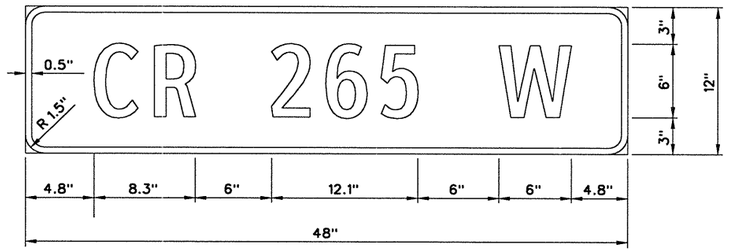

SIGN NO.: 6
SHEET NO.: 8 OF 8
BACKGROUND: GREEN
FONT: 6CV-2W
MOUNTING: SEE SMALL SIGN SUMMARY

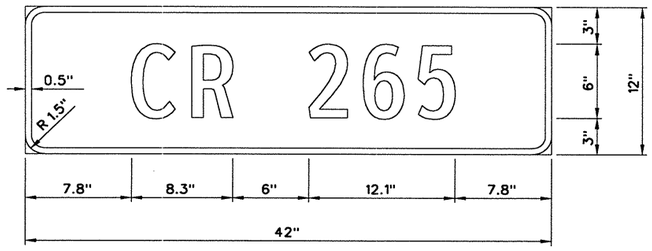

SIGN NO.: 6
SHEET NO.: 8 OF 8
BACKGROUND: GREEN
FONT: 6CV-2W
MOUNTING: SEE SMALL SIGN SUMMARY

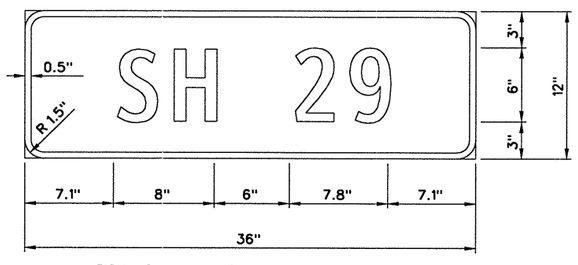

SIGN NO.: 1,2
SHEET NO.: 7 OF 8
BACKGROUND: GREEN
FONT: 6CV-2W
MOUNTING: SEE SMALL SIGN SUMMARY

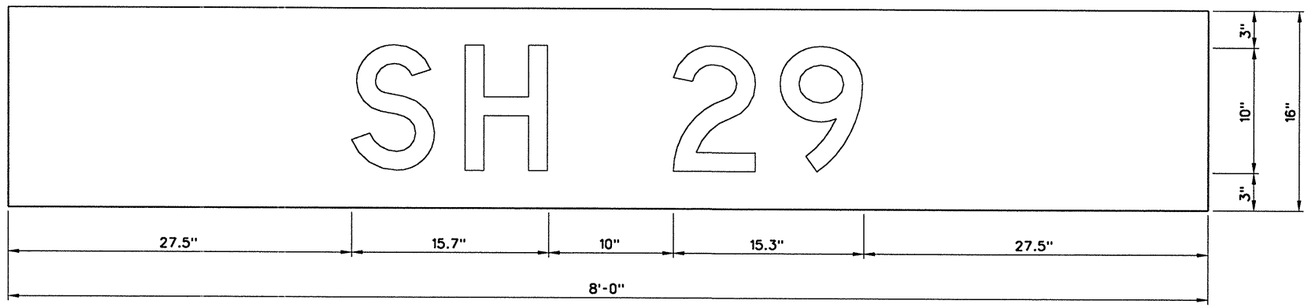

SIGN NO.: 9,12
SHEET NO.: 4,6 OF 8
BACKGROUND: GREEN
FONT: SERIES D
MOUNTING: SEE SMALL SIGN SUMMARY

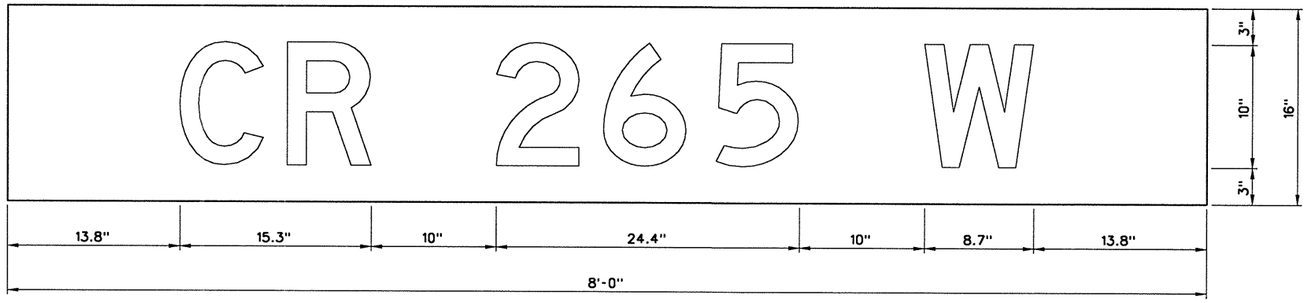

SIGN NO.: 2
SHEET NO.: 4 OF 8
BACKGROUND: GREEN
FONT: SERIES D
MOUNTING: SEE SMALL SIGN SUMMARY

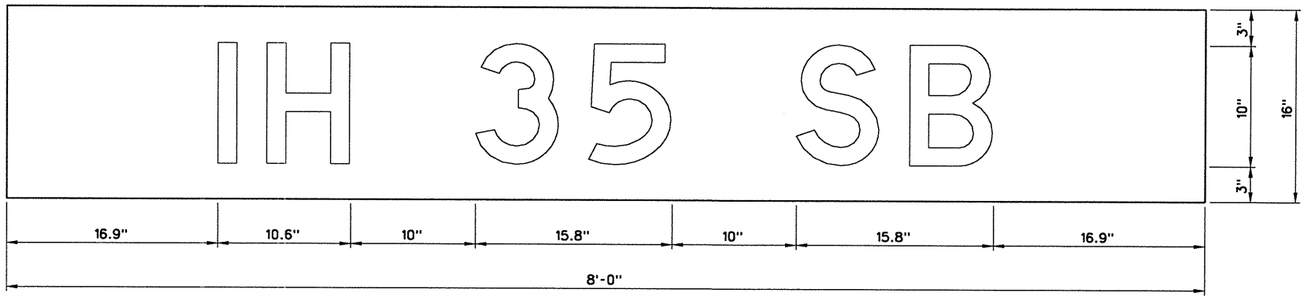

SIGN NO.: 13
SHEET NO.: 6 OF 8
BACKGROUND: GREEN
FONT: SERIES D
MOUNTING: SEE SMALL SIGN SUMMARY

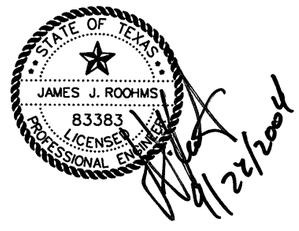

NO.	REVISION	BY	DATE

CP&Y Chiang, Patel & Yerby, Inc.

© 2004

Texas Department of Transportation

SH 29

SIGN DETAILS

		FED. ROAD DIV. NO.	STATE	FEDERAL AID PROJECT NO.			SHEET NO.
Designed:	GJT	6	TEXAS	CC 337-1-29			132
Checked:	SML	STATE DIST. NO.	COUNTY	CONTROL NO.	SECTION NO.	JOB NO.	HIGHWAY NO.
Drawn:	GJT	14	WILLIAMSON	0337	01	029	SH 29
Checked:	SML						

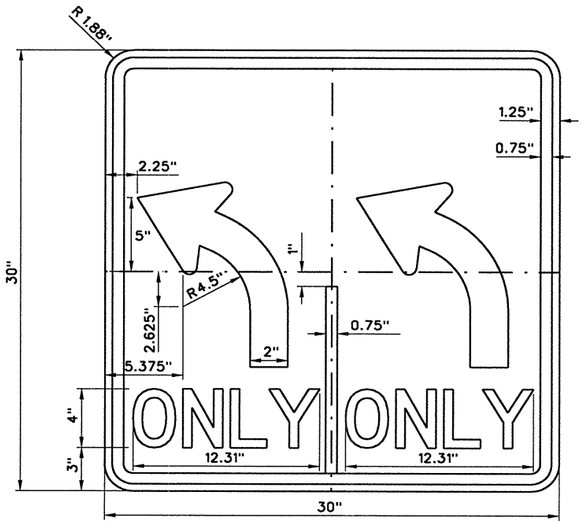

SIGN NO.: 2,3,4
SHEET NO.: 4 OF 8
BACKGROUND: GREEN
FONT: 6CV-2W
MOUNTING: SEE SMALL SIGN SUMMARY

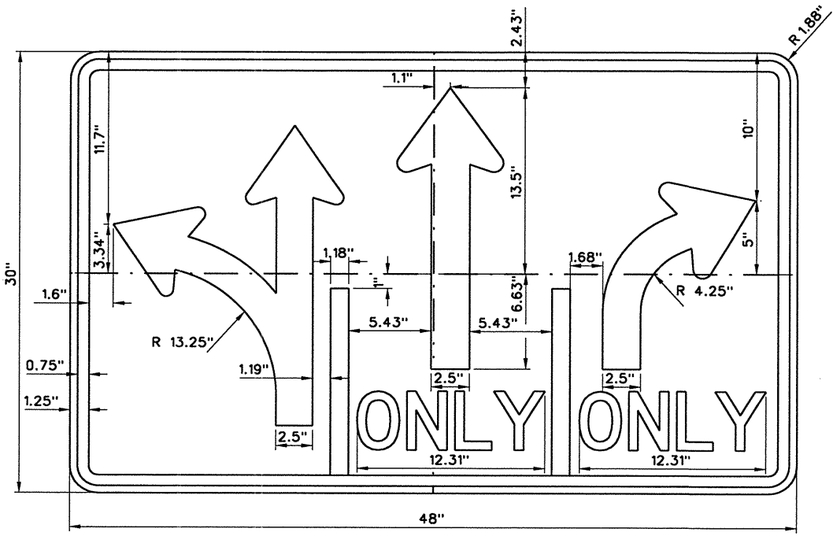

SIGN NO.: 2,3
SHEET NO.: 7 OF 8
BACKGROUND: GREEN
FONT: 6CV-2W
MOUNTING: SEE SMALL SIGN SUMMARY

STATE OF TEXAS
JAMES J. ROOHMS
83383
LICENSED
PROFESSIONAL ENGINEER
9/22/2004

NO.	REVISION	BY	DATE

CP&Y Chiang, Patel & Yerby, Inc.

© 2004

Texas Department of Transportation

SH 29

SIGN DETAILS

		FED. ROAD DIV. NO.	STATE	FEDERAL AID PROJECT NO.				SHEET NO.
Designed:	GJT	6	TEXAS	CC 337-1-29				134
Checked:	SML	STATE DIST. NO.	COUNTY	CONTROL NO.	SECTION NO.	JOB NO.	HIGHWAY NO.	
Drawn:	GJT	14	WILLIAMSON	0337	01	029	SH 29	
Checked:	SML							

REQUIREMENTS FOR OVERHEAD GUIDE SIGNS

TYPICAL EXAMPLES

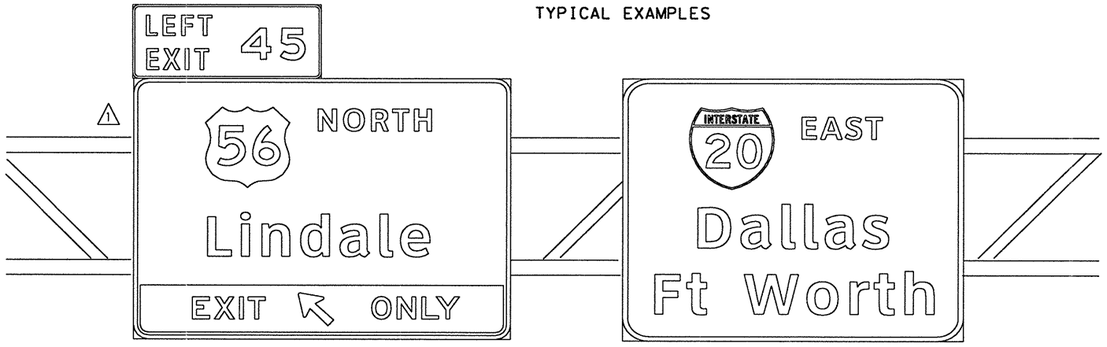

DEPARTMENT MATERIAL SPECIFICATIONS	
ALUMINUM SIGN BLANKS	DMS-7110
FLAT SURFACE REFLECTIVE SHEETING	DMS-8300
VINYL NON-REFLECTIVE DECAL SHEETING	DMS-8320

OVERHEAD GUIDE SIGNS AND EXIT NUMBER PANELS		
USAGE	COLOR	SIGN SHEETING
BACKGROUND	ALL	TYPE D (NON-FLUORESCENT PRISMATIC) (Type VIII or Type IX only)
LEGEND & BORDERS	WHITE	TYPE D (NON-FLUORESCENT PRISMATIC) (Type VIII or Type IX only)
LEGEND & BORDERS	BLACK	VINYL NON-REFLECTIVE DECAL SHEETING

GENERAL NOTES:

1. Signs to be furnished, should be as detailed elsewhere in the plans and/or as shown on sign tabulation sheet. Standard sign designs and arrow dimensions can be found in the "Standard Highway Sign Designs for Texas" (SHSD).
2. Black legends shall use the Federal Highway Administration (FHWA) Standard Highway Alphabets (B, C, D, E, Emod or F).
   White legends shall use the Clearview Alphabet.
   The following Clearview fonts shall be used to replace the existing FHWA lettering, when not specified in the SHSD or in the plans.

B	CV-1W
C	CV-2W
D	CV-3W
E	CV-4W
Emod	CV-5WR
F	CV-6W

3. Lateral spacing between letters and numerals shall conform with the SHSD, and any approved changes thereto. Lateral spacing of legends shall provide a balanced appearance when spacing is not shown.
4. Black legend shall be applied by screening process or cut-out vinyl non-reflective decal sheeting to background sheeting, or combination thereof.
5. White legends shall be applied by screening process with transparent colored ink, transparent colored overlay film to white background sheeting or cut-out white sheeting to colored background sheeting, or combination thereof.
6. Dimensions shown for borders and corner radii on parent sign are nominal. Borders may vary in width as much as 1/2 inch. Corner radii above 3 inches may vary in radius as much as 1 inch. Borders and corner radii must be of matching widths. The sign area outside the corner radius need not be trimmed or rounded.
7. Sign substrate shall be any material that meets the Department Material Specification requirements for permanent sign substrates. Exit Number Panels attached above the parent sign shall be made with the same substrate and sheeting as the parent sign.
8. Requirements for attachments are found on Standard Plan Sheet TSR(2).
9. Mounting details for overhead sign shall be as detailed elsewhere in the plans or the supplier's choice, subject to approval by the engineer.
10. Background sheeting shall be applied to the extruded aluminum panels per sheeting manufacturer's recommendations. Sheeting shall overlap each extrusion's horizontal edge and will not be allowed to bridge the horizontal gap between extrusions.

REQUIREMENTS FOR LARGE GROUND-MOUNTED GUIDE SIGNS

TYPICAL EXAMPLES





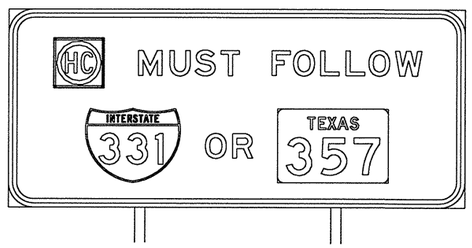

DEPARTMENT MATERIAL SPECIFICATIONS	
PLYWOOD SIGN BLANKS	DMS-7100
ALUMINUM SIGN BLANKS	DMS-7110
FLAT SURFACE REFLECTIVE SHEETING	DMS-8300
VINYL NON-REFLECTIVE DECAL SHEETING	DMS-8320

LARGE GROUND-MOUNTED SIGNS AND EXIT NUMBER PANELS		
USAGE	COLOR	SIGN SHEETING
BACKGROUND	ALL	TYPE C (HIGH SPECIFIC INTENSITY)
LEGEND & BORDERS	WHITE	TYPE D (NON-FLUORESCENT PRISMATIC) (Type VIII or Type IX only)
LEGEND & BORDERS	BLACK	VINYL NON-REFLECTIVE DECAL SHEETING

GENERAL NOTES:

1. Signs to be furnished, should be as detailed elsewhere in the plans and/or as shown on sign tabulation sheet. Standard sign designs and arrow dimensions can be found in the "Standard Highway Sign Designs for Texas" (SHSD).
2. Black legends shall use the Federal Highway Administration (FHWA) Standard Highway Alphabets (B, C, D, E, Emod or F).
   White legends shall use the Clearview Alphabet.
   The following Clearview fonts shall be used to replace the existing FHWA lettering, when not specified in the SHSD or in the plans.

B	CV-1W
C	CV-2W
D	CV-3W
E	CV-4W
Emod	CV-5WR
F	CV-6W

3. Lateral spacing between letters and numerals shall conform with the SHSD, and any approved changes thereto. Lateral spacing of legends shall provide a balanced appearance when spacing is not shown.
4. Black legend shall be applied by screening process or cut-out vinyl non-reflective decal sheeting to background sheeting, or combination thereof.
5. White legends shall be cut-out white sheeting applied to green background sheeting.
6. Dimensions shown for borders and corner radii on parent sign are nominal. Borders may vary in width as much as 1/2 inch. Corner radii above 3 inches may vary in radius as much as 1 inch. Borders and corner radii must be of matching widths. The sign area outside the corner radius need not be trimmed or rounded.
7. Sign substrate shall be any material that meets the Department Material Specification requirements for permanent sign substrates. Exit Number Panels attached above the parent sign shall be made with the same substrate and sheeting as the parent sign.
8. Requirements for attachments are found on Standard Plan Sheet TSR(2).
9. Mounting details for roadside mounted signs are shown in the "SMD series" Standard Plan Sheets.
10. Background sheeting shall be applied to the extruded aluminum panels per sheeting manufacturer's recommendations. Sheeting shall overlap each extrusion's horizontal edge and will not be allowed to bridge the horizontal gap between extrusions.

The Standard Highway Sign Designs for Texas (SHSD) can be found at the following website.

ftp://ftp.dot.state.tx.us/pub/txdot-info/trf/shsd/Navigate.pdf

12/03 Revision

1 Modify location of shield.

2 Modify sign

STANDARD PLANS
Texas Department of Transportation
Traffic Operations Division

TYPICAL SIGN REQUIREMENTS

TSR(1)-03

© TxDOT October 2003	DN: BAS	CK: GRB	DW: FDN	CK: CAL

REVISIONS	STATE DISTRICT	FEDERAL REGION	FEDERAL AID PROJECT	SHEET
12-03	AUS	6	CC 337-1-29	135

COUNTY	CONTROL	SECTION	JOB	HIGHWAY
WILLIAMSON	0337	01	029	SH 29

REQUIREMENTS FOR ATTACHMENTS TO GUIDE SIGNS

TYPICAL EXAMPLES

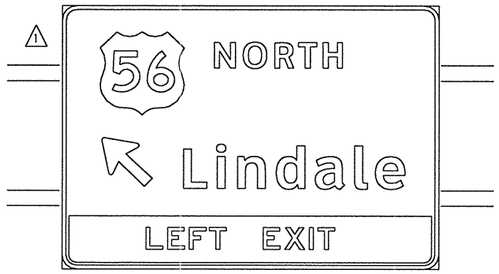

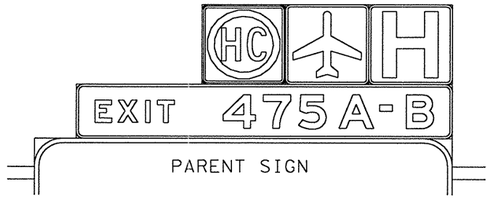

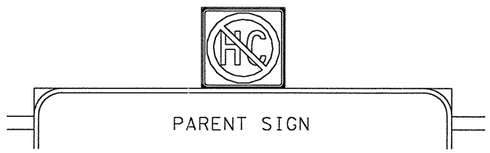

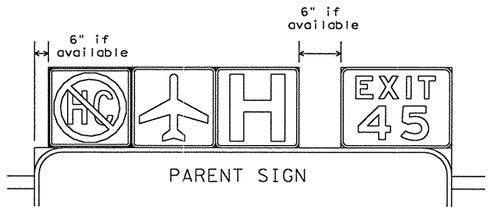

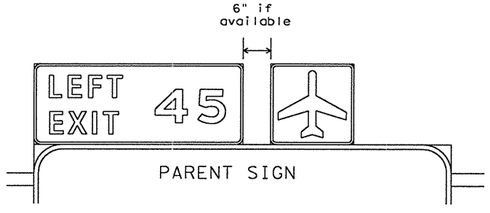

DEPARTMENT MATERIAL SPECIFICATIONS	
ALUMINUM SIGN BLANKS	DMS-7110
FLAT SURFACE REFLECTIVE SHEETING	DMS-8300
VINYL NON-REFLECTIVE DECAL SHEETING	DMS-8320

USAGE	COLOR	SIGN SHEETING
BACKGROUND	ALL	TYPE D (NON-FLUORESCENT PRISMATIC) (Type VIII or Type IX only)
LEGEND & BORDERS	WHITE	TYPE D (NON-FLUORESCENT PRISMATIC) (Type VIII or Type IX only)
LEGEND & BORDERS	BLACK	VINYL NON-REFLECTIVE DECAL SHEETING

GENERAL NOTES:

1. Signs to be furnished, should be as detailed elsewhere in the plans and/or as shown on sign tabulation sheet. Standard sign designs and arrow dimensions can be found in the "Standard Highway Sign Designs for Texas" (SHSD).
2. Route Marker legends (ie. IH, US, SH and FM shields) shall use the Federal Highway Administration (FHWA) Standard Highway Alphabets (B, C, D, E, Emod or F).
3. Lateral spacing between letters and numerals shall conform with the SHSD, and any approved changes thereto. Lateral spacing of legends shall provide a balanced appearance when spacing is not shown.
4. Black legend shall be applied by screening process or cut-out vinyl non-reflective decal sheeting to white background sheeting, or combination thereof.
5. White legends shall be applied by screening process with transparent colored ink, transparent colored overlay film to white background sheeting or cut-out white sheeting to colored background sheeting, or combination thereof.
6. Colored legends shall be applied by screening process with transparent colored ink, transparent colored overlay film or colored sheeting to white background sheeting, or combination thereof.
7. Attachments should be one piece sheet aluminum alloy (Type A). Route Markers and other attachments to the parent sign face shall be 0.063 inch thick. General Service Plaques shall be 0.080 inch thick and Routing Plaques shall be 0.100 inch thick. Direct applied attachments may be used when approved by the Engineer.
8. The priority for Routing Plaques shall be (left to right) Hazardous Cargo, Airport then Hospital. See examples for mounting location.
9. Mounting details of attachments to parent signs face are shown on Standard Plan Sheet TSR(6). Mounting details of attachments above and below parent sign are shown in the "SMD series" Standard Plan Sheets.



REQUIREMENTS FOR EXIT ONLY AND LEFT EXIT PANELS

TYPICAL EXAMPLES

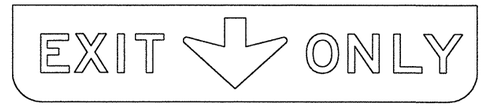

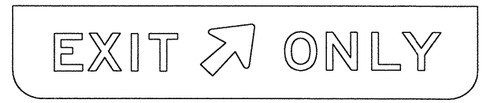

2

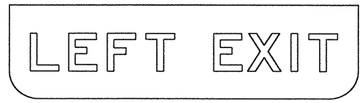

DEPARTMENT MATERIAL SPECIFICATIONS	
ALUMINUM SIGN BLANKS	DMS-7110
FLAT SURFACE REFLECTIVE SHEETING	DMS-8300
VINYL NON-REFLECTIVE DECAL SHEETING	DMS-8320

OVERHEAD EXIT PANELS

USAGE	COLOR	SIGN SHEETING
BACKGROUND	YELLOW	TYPE D (NON-FLUORESCENT PRISMATIC) (Type VIII or Type IX only)
LEGEND	BLACK	VINYL NON-REFLECTIVE DECAL SHEETING

GENERAL NOTES:

1. Signs to be furnished, should be as detailed elsewhere in the plans and/or as shown on sign tabulation sheet. Standard sign designs and arrow dimensions can be found in the "Standard Highway Sign Designs for Texas" (SHSD). Individual panel sizes may be adjusted during plan preparation to fit actual parent sign sizes if necessary.
2. Exit Panel legends shall use the Federal Highway Administration (FHWA) Standard Highway Alphabets E Series.
3. Lateral spacing between letters and numerals shall conform with the SHSD, and any approved changes thereto. Lateral spacing of legends shall provide a balanced appearance when spacing is not shown.
4. Black legend shall be applied by screening process or cut-out vinyl non-reflective decal sheeting to yellow background sheeting, or combination thereof.
5. Panels should be 0.063 inch thick sheet aluminum alloy (Type A). Direct applied attachment may be used when approved by the Engineer.
6. Mounting details for Exit Only Panels are shown on Standard Plan Sheet TSR(6).

The Standard Highway Sign Designs for Texas (SHSD) can be found at the following website.

ftp://ftp.dot.state.tx.us/pub/txdot-info/trf/shsd/Navigate.pdf

12/03 Revision

1 Modify location of shield.

2 Change to new standard

STANDARD PLANS
Texas Department of Transportation
Traffic Operations Division

TYPICAL SIGN REQUIREMENTS

TSR(2)-03

©TxDOT October 2003	DN: - BAS	CK: - GRB	DW: - FDN	CK: - CAL
REVISIONS 12-03	STATE DISTRICT	FEDERAL REGION	FEDERAL AID PROJECT	SHEET
	AUS	6	CC 337-1-29	136

COUNTY	CONTROL	SECTION	JOB	HIGHWAY
WILLIAMSON	0337	01	029	SH 29

...\signing_striping\tsr03.dgn 09/21/2004 10:44:06 AM

REQUIREMENTS FOR E SERIES STANDARD GUIDE SIGNS

TYPICAL EXAMPLES

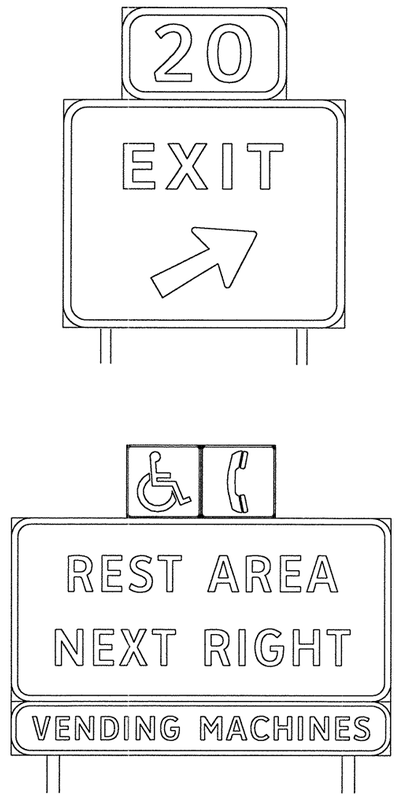

DEPARTMENT MATERIAL SPECIFICATIONS	
PLYWOOD SIGN BLANKS	DMS-7100
ALUMINUM SIGN BLANKS	DMS-7110
FLAT SURFACE REFLECTIVE SHEETING	DMS-8300

GROUND-MOUNTED SIGNS

USAGE	COLOR	SIGN SHEETING
BACKGROUND	ALL	TYPE C (HIGH SPECIFIC INTENSITY)
LEGEND & BORDERS	WHITE	TYPE D (NON-FLUORESCENT PRISMATIC) (Type VIII or Type IX only)

GENERAL NOTES:

1. Signs to be furnished, should be as detailed elsewhere in the plans and/or as shown on sign tabulation sheet. Standard sign designs and arrow dimensions can be found in the "Standard Highway Sign Designs for Texas" (SHSD). Individual panel sizes may be adjusted during plan preparation to fit actual parent sign sizes if necessary.
2. White legends shall use the Clearview Alphabet.
   The following Clearview fonts shall be used to replace the existing Federal Highway Administration (FHWA) Standard Highway Alphabets, when not specified in the SHSD, or in the plans.

B	CV-1W
C	CV-2W
D	CV-3W
E	CV-4W
Emod	CV-5WR
F	CV-6W

3. Lateral spacing between letters and numerals shall conform with the SHSD, and any approved changes thereto. Lateral spacing of legends shall provide a balanced appearance when spacing is not shown.
4. White legends shall be cut-out white sheeting applied to colored background sheeting.
5. Dimensions shown for borders and corner radii are nominal. Borders may vary in width as much as 1/2 inch. Corner radii above 3 inches may vary in radius as much as 1 inch. Borders and corner radii must be of matching widths. The sign area outside the corner radius need not be trimmed or rounded.
6. Sign substrate shall be any material that meets the Department Material Specification requirements for permanent sign substrates. Exit Number Panels attached above the parent sign shall be made with the same substrate and sheeting as the parent sign.
7. Requirements for attachments are found on Standard Plan Sheet TSR(2).
8. Mounting details for roadside mounted signs are shown in the "SMD series" Standard Plan Sheets.

REQUIREMENTS FOR GREEN D AND I SERIES GUIDE SIGNS ⚠

TYPICAL EXAMPLES

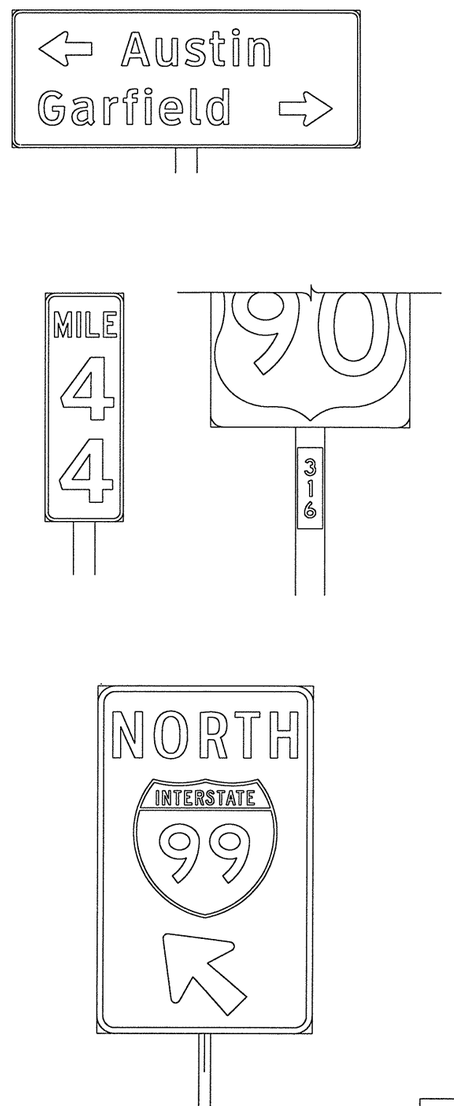

DEPARTMENT MATERIAL SPECIFICATIONS	
PLYWOOD SIGN BLANKS	DMS-7100
ALUMINUM SIGN BLANKS	DMS-7110

Square Ft.	Min. Thickness
Less than 7.5	0.080
7.5 to 15	0.100
Greater than 15	0.125

FLAT SURFACE REFLECTIVE SHEETING	DMS-8300

GROUND-MOUNTED SIGNS

USAGE	COLOR	SIGN SHEETING
BACKGROUND	ALL	TYPE C (HIGH SPECIFIC INTENSITY)
LEGEND & BORDERS	WHITE	TYPE D (NON-FLUORESCENT PRISMATIC) (Type VIII or Type IX only)

GENERAL NOTES:

1. Signs to be furnished, should be as detailed elsewhere in the plans and/or as shown on sign tabulation sheet. Standard sign designs and arrow dimensions can be found in the "Standard Highway Sign Designs for Texas" (SHSD).
2. White legends shall use the Clearview Alphabet.
   The following Clearview fonts shall be used to replace the existing Federal Highway Administration (FHWA) Standard Highway Alphabets, when not specified in the SHSD, or in the plans.

B	CV-1W
C	CV-2W
D	CV-3W
E	CV-4W
Emod	CV-5WR
F	CV-6W

3. Lateral spacing between letters and numerals shall conform with the SHSD, and any approved changes thereto. Lateral spacing of legends shall provide a balanced appearance when spacing is not shown.
4. White legends shall be cut-out white sheeting applied to green background sheeting.
5. Dimensions shown for borders and corner radii are nominal. Borders may vary in width as much as 1/2 inch. Corner radii above 3 inches may vary in radius as much as 1 inch. Borders and corner radii must be of matching widths. The sign area outside the corner radius need not be trimmed or rounded.
6. Sign substrate shall be any material that meets the Department Material Specification requirements for permanent sign substrates.
7. Requirements for attachments are found on Standard Plan Sheet TSR(2).
8. Mounting details for roadside mounted signs are shown in the "SMD series" Standard Plan Sheets.

The Standard Highway Sign Designs for Texas (SHSD) can be found at the following website.

ftp://ftp.dot.state.tx.us/pub/txdot-info/trf/shsd/Navigate.pdf

12/03 Revision

⚠ Added I Series to title

STANDARD PLANS
Texas Department of Transportation
Traffic Operations Division

TYPICAL SIGN REQUIREMENTS

TSR(3)-03

©TxDOT October 2003

DN: BAS	CK: GRB	DW: FDN	CK: CAL

REVISIONS	STATE DISTRICT	FEDERAL REGION	FEDERAL AID PROJECT	SHEET
12-03	AUS	6	CC 337-1-29	137

COUNTY	CONTROL	SECTION	JOB	HIGHWAY
WILLIAMSON	0337	01	029	SH 29

REQUIREMENTS FOR BLUE AND BROWN D SERIES GUIDE SIGNS

TYPICAL EXAMPLES

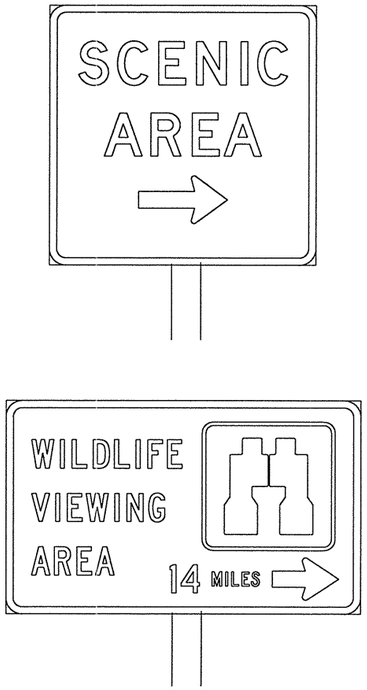

DEPARTMENT MATERIAL SPECIFICATIONS

PLYWOOD SIGN BLANKS	DMS-7100
ALUMINUM SIGN BLANKS	DMS-7110

Square Ft.	Min. Thickness
Less than 7.5	0.080
7.5 to 15	0.100
Greater than 15	0.125

FLAT SURFACE REFLECTIVE SHEETING	DMS-8300

GROUND-MOUNTED SIGNS

USAGE	COLOR	SIGN SHEETING
BACKGROUND	ALL	TYPE C (HIGH SPECIFIC INTENSITY)
LEGEND & BORDERS	WHITE	TYPE C (HIGH SPECIFIC INTENSITY)

GENERAL NOTES:

1. Signs to be furnished, should be as detailed elsewhere in the plans and/or as shown on sign tabulation sheet. Standard sign designs and arrow dimensions can be found in the "Standard Highway Sign Designs for Texas" (SHSD).
2. Blue and brown D-series signs shall use the Federal Highway Administration (FHWA) Standard Highway Alphabets (B, C, D, E, Emod or F).
3. Lateral spacing between letters and numerals shall conform with the SHSD, and any approved changes thereto. Lateral spacing of legends shall provide a balanced appearance when spacing is not shown.
4. White legends shall be applied by screening process with transparent colored ink, transparent colored overlay film to white background sheeting or cut-out white sheeting to colored background sheeting, or combination thereof.
5. Dimensions shown for borders and corner radii are nominal. Borders may vary in width as much as 1/2 inch. Corner radii above 3 inches may vary in radius as much as 1 inch. Borders and corner radii must be of matching widths. The sign area outside the corner radius need not be trimmed or rounded.
6. Sign substrate shall be any material that meets the Department Material Specification requirements for permanent sign substrates.
7. Requirements for attachments are found on Standard Plan Sheet TSR(2).
8. Mounting details for roadside mounted signs are shown in the "SMD series" Standard Plan Sheets.

REQUIREMENTS FOR INDEPENDENT MOUNTED ROUTE MARKERS

TYPICAL EXAMPLES

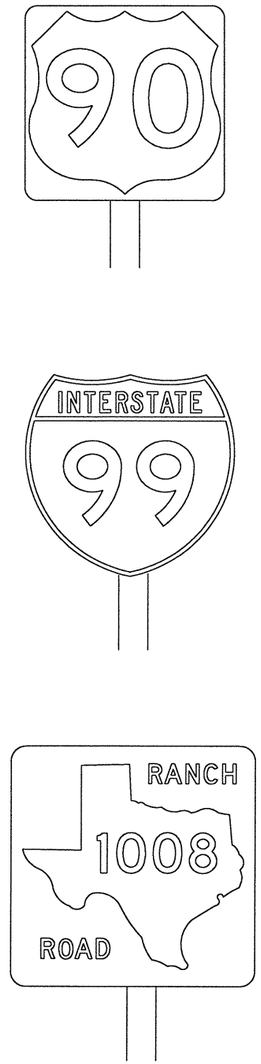

DEPARTMENT MATERIAL SPECIFICATIONS

PLYWOOD SIGN BLANKS	DMS-7100
ALUMINUM SIGN BLANKS	DMS-7110
FLAT SURFACE REFLECTIVE SHEETING	DMS-8300
VINYL NON-REFLECTIVE DECAL SHEETING	DMS-8320

USAGE	COLOR	SIGN SHEETING
BACKGROUND	ALL	TYPE C (HIGH SPECIFIC INTENSITY)
LEGEND & BORDERS	WHITE	TYPE C (HIGH SPECIFIC INTENSITY)
LEGEND & BORDERS	BLACK	VINYL NON-REFLECTIVE DECAL SHEETING

GENERAL NOTES:

1. Signs to be furnished, should be as detailed elsewhere in the plans and/or as shown on sign tabulation sheet. Standard sign designs and arrow dimensions can be found in the "Standard Highway Sign Designs for Texas" (SHSD).
2. Route Marker legends (ie. IH, US, SH and FM shields) shall use the Federal Highway Administration (FHWA) Standard Highway Alphabets (B, C, D, E, Emod or F).
3. Lateral spacing between letters and numerals shall conform with the SHSD, and any approved changes thereto. Lateral spacing of legends shall provide a balanced appearance when spacing is not shown.
4. Black legend shall be applied by screening process or cut-out vinyl non-reflective decal sheeting to white background sheeting, or combination thereof.
5. White legends shall be applied by screening process with transparent colored ink, transparent colored overlay film to white background sheeting or cut-out white sheeting to colored background sheeting, or combination thereof.
6. Independent mounted Route Marker sign blanks, for 24 inch markers shall be 0.080 inch thick, 36 inch markers shall be 0.100 inch thick, one piece sheet aluminum alloy (Type A).
7. Mounting details for roadside mounted signs are shown in the "SMD series" Standard Plan Sheets.

The Standard Highway Sign Designs for Texas (SHSD) can be found at the following website.

ftp://ftp.dot.state.tx.us/pub/txdot-info/trf/shsd/Navigate.pdf

STANDARD PLANS
Texas Department of Transportation
Traffic Operations Division

TYPICAL SIGN REQUIREMENTS

TSR(4)-03

© TxDOT October 2003

DN: - BAS	CK: - GRB	DW: - FDN	CK: - CAL

REVISIONS	STATE DISTRICT	FEDERAL REGION	FEDERAL AID PROJECT	SHEET
12-03	AUS	6	CC 337-1-29	138

COUNTY	CONTROL	SECTION	JOB	HIGHWAY
WILLIAMSON	0337	01	029	SH 29

REQUIREMENTS FOR REGULATORY SIGNS

TYPICAL EXAMPLES

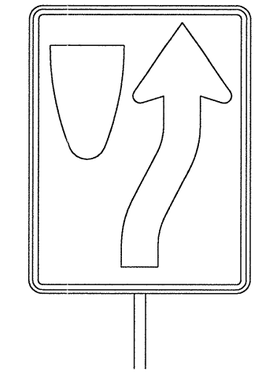

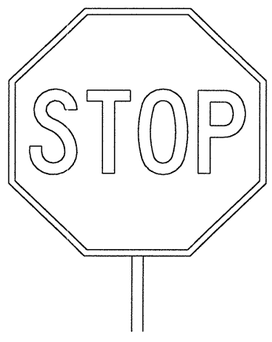



DEPARTMENT MATERIAL SPECIFICATIONS

PLYWOOD SIGN BLANKS	DMS-7100
ALUMINUM SIGN BLANKS	DMS-7110

Square Ft.	Min. Thickness
Less than 7.5	0.080
7.5 to 15	0.100
Greater than 15	0.125

FLAT SURFACE REFLECTIVE SHEETING	DMS-8300
VINYL NON-REFLECTIVE DECAL SHEETING	DMS-8320

USAGE	COLOR	SIGN SHEETING
BACKGROUND	ALL	TYPE C (HIGH SPECIFIC INTENSITY)
LEGEND & BORDERS	WHITE	TYPE C (HIGH SPECIFIC INTENSITY)
LEGEND & BORDERS	BLACK	VINYL NON-REFLECTIVE DECAL SHEETING

GENERAL NOTES:

1. Signs to be furnished, should be as detailed elsewhere in the plans and/or as shown on sign tabulation sheet. Standard sign designs and arrow dimensions can be found in the "Standard Highway Sign Designs for Texas" (SHSD).
2. Regulatory sign legends shall use the Federal Highway Administration (FHWA) Standard Highway Alphabets (B, C, D, E, Emod or F).
3. Lateral spacing between letters and numerals shall conform with the SHSD, and any approved changes thereto. Lateral spacing of legends shall provide a balanced appearance when spacing is not shown.
4. Black legend shall be applied by screening process or cut-out vinyl non-reflective decal sheeting to white background sheeting, or combination thereof.
5. White legends shall be applied by screening process with transparent colored ink, transparent colored overlay film to white background sheeting or cut-out white sheeting to colored background sheeting, or combination thereof.
6. Colored legends shall be applied by screening process with transparent colored ink, transparent colored overlay film or colored sheeting to white background sheeting, or combination thereof.
7. Sign substrate shall be any material that meets the Department Material Specification requirements for permanent sign substrates.
8. Requirements for attachments are found on Standard Plan Sheet TSR(2).
9. Mounting details for roadside mounted signs are shown in the "SMD series" Standard Plan Sheets.

REQUIREMENTS FOR WARNING SIGNS

TYPICAL EXAMPLES

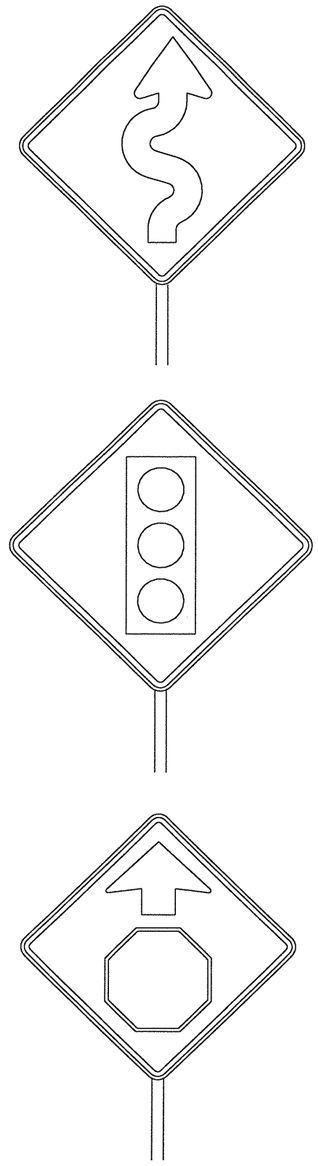

DEPARTMENT MATERIAL SPECIFICATIONS

ALUMINUM SIGN BLANKS	DMS-7110

Square Ft.	Min. Thickness
Less than 7.5	0.080
7.5 to 15	0.100
Greater than 15	0.125

FLAT SURFACE REFLECTIVE SHEETING	DMS-8300
VINYL NON-REFLECTIVE DECAL SHEETING	DMS-8320

USAGE	COLOR	SIGN SHEETING
BACKGROUND	YELLOW	TYPE E (FLUORESCENT PRISMATIC)
LEGEND & BORDERS	BLACK	VINYL NON-REFLECTIVE DECAL SHEETING
LEGEND	ALL OTHER	TYPE D (NON-FLUORESCENT PRISMATIC) (Type VIII or Type IX only)

GENERAL NOTES:

1. Signs to be furnished, should be as detailed elsewhere in the plans and/or as shown on sign tabulation sheet. Standard sign designs and arrow dimensions can be found in the "Standard Highway Sign Designs for Texas" (SHSD).
2. Warning sign legends shall use the Federal Highway Administration (FHWA) Standard Highway Alphabets (B, C, D, E, Emod or F).
3. Lateral spacing between letters and numerals shall conform with the SHSD, and any approved changes thereto. Lateral spacing of legends shall provide a balanced appearance when spacing is not shown.
4. Black legend shall be applied by screening process or cut-out vinyl non-reflective decal sheeting to background sheeting, or combination thereof.
5. Colored legends shall be applied by screening process with transparent colored ink, transparent colored overlay film or colored sheeting to white background sheeting, or combination thereof.
6. Requirements for attachments are found on Standard Plan Sheet TSR(2).
7. Mounting details for roadside mounted signs are shown in the "SMD series" Standard Plan Sheets.

The Standard Highway Sign Designs for Texas (SHSD) can be found at the following website.

ftp://ftp.dot.state.tx.us/pub/txdot-info/trf/shsd/Navigate.pdf

STANDARD PLANS
Texas Department of Transportation
Traffic Operations Division

TYPICAL SIGN REQUIREMENTS

TSR(5)-03

©TxDOT October 2003	DN: - BAS	CK: - GRB	DW: - FDN	CK: - CAL
REVISIONS 12-03	STATE DISTRICT: AUS	FEDERAL REGION: 6	FEDERAL AID PROJECT: CC 337-1-29	SHEET: 139
	COUNTY: WILLIAMSON	CONTROL: 0337	SECTION: 01	JOB: 029	HIGHWAY: SH 29

...\signing_striping\tsr03.dgn 09/21/2004 10:44:06 AM

TYPICAL ATTACHMENT OF ROUTE MARKERS AND "EXIT ONLY" PANELS TO GUIDE SIGNS

SCREW ATTACHMENT

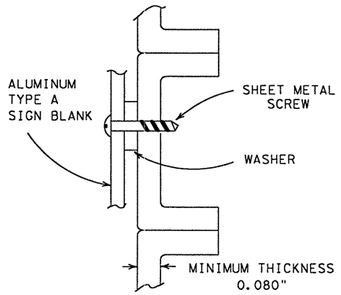

ALUMINUM GUIDE SIGNS
(EXTRUDED ALUMINUM PANELS)

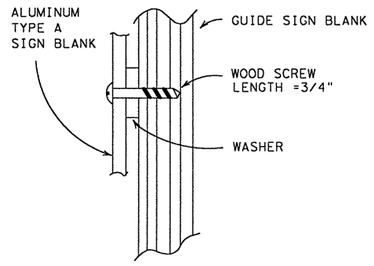

PLYWOOD GUIDE SIGN
(5/8" PLYWOOD)

NUT/BOLT ATTACHMENT

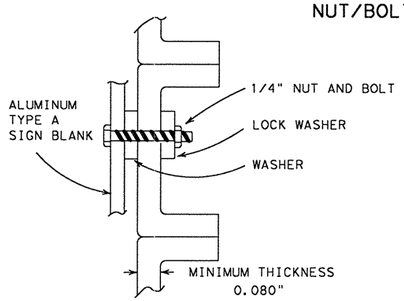

ALUMINUM GUIDE SIGNS
(EXTRUDED ALUMINUM PANELS)

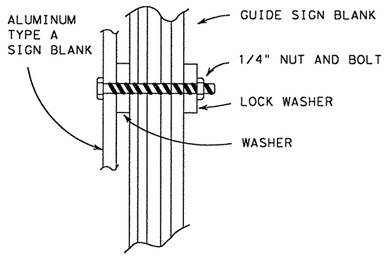

PLYWOOD GUIDE SIGN
(5/8" PLYWOOD)

DIRECT ATTACHMENT

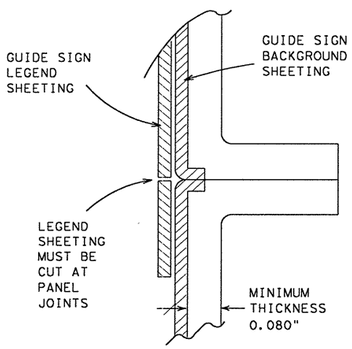

GUIDE SIGN LEGEND
(APPLIED DIRECTLY TO EXTRUDED ALUMINUM PANELS)

SIGN BLANK PUNCHING DETAILS FOR ROUTE MARKERS WHEN ATTACHED TO GUIDE SIGN

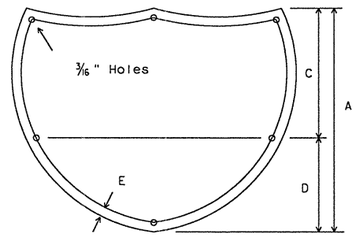

INTERSTATE ROUTE MARKERS

A	C	D	E
36	21	15	1½
48	28	20	1¾

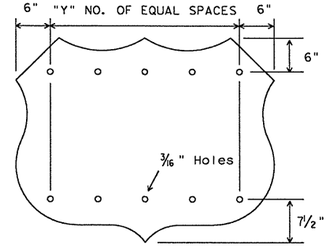

U.S. ROUTE MARKERS

Sign Size	"Y"
24x24	2
30x24	3
36x36	3
45x36	4
48x48	4
60x48	5

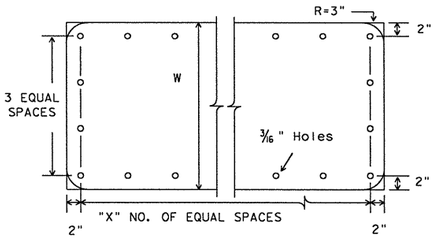

STATE ROUTE MARKERS

No. of Digits	W	X
4	24	4
4	36	5
4	48	6
3	24	3
3	36	4
3	48	5

⚠1 ARROW DETAILS

for Large Ground-Mounted and Overhead Guide Signs

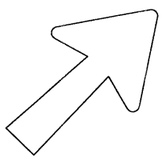

Type C
"Down" arrow

TYPE	LETTER SIZE
A-1	10.67" U/L and 10" Caps
A-2	13.33" U/L and 12" Caps
A-3	16" U/L
B-1	10.67" U/L and 10" Caps
B-2	13.33" U/L and 12" Caps
B-3	16" U/L

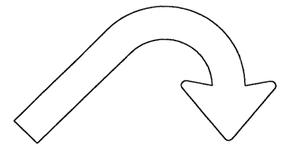

E3 and E3a

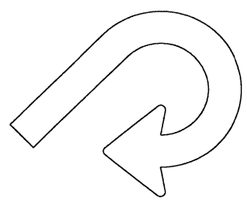

E4 and E4a

CODE	USED ON SIGN NO.
E-3 & E-4	E5-3 and E5-4
E-3a & E-4a	E5-3a and E5-4a

Arrow dimensions are shown in the "Standard Highway Sign Designs for Texas" manual.

ARROW DETAILS

for Distance and Destination Signs

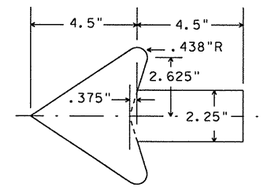

Standard 2.25" arrow
to be used with
6 inch letters.

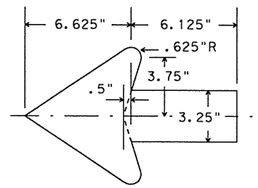

Standard 3.25" arrow
to be used with
8 inch letters.

The Standard Highway Sign Designs for Texas (SHSD) can be found at the following website.
ftp://ftp.dot.state.tx.us/pub/txdot-info/trf/shsd/Navigate.pdf

12/03 Revision

⚠1 Modify details of arrows.

STANDARD PLANS
Texas Department of Transportation
Traffic Operations Division

TYPICAL SIGN REQUIREMENTS

TSR(6)-03

©TxDOT October 2003

DN: BAS	CK: GRB	DW: FDN	CK: CAL

REVISIONS 12-03	STATE DISTRICT	FEDERAL REGION	FEDERAL AID PROJECT	SHEET
	AUS	6	CC 337-1-29	146

COUNTY	CONTROL	SECTION	JOB	HIGHWAY
WILLIAMSON	0337	01	029	SH 29

SIGN SUPPORT DESCRIPTIVE CODES

(Descriptive Codes correspond to project estimate and quantities sheets)

SM RD SGN ASSM TY XXXXX(X)XX(X-XXXX)

Post Type

FRP = Fiberglass Reinforced Plastic Pipe (see SMD(FRP))
TWT = Thin-Walled Tubing (see SMD(TWT))
10BWG = 10 BWG Tubing (see SMD(SLIP-1) to SMD(SLIP-3))
S80 = Schedule 80 Pipe (see SMD(SLIP-1) to SMD(SLIP-3))

Number of Posts (1 or 2)

Anchor Type

UA = Universal Anchor - Concreted (see SMD(FRP) and SMD(TWT))
UB = Universal Anchor - Bolted down (see SMD(FRP) and SMD(TWT))
WA = Wedge Anchor - (see SMD(TWT))
SA = Slipbase - Concreted (see SMD(SLIP-1) to SMD(SLIP-3))
SB = Slipbase - Bolted Down (see SMD(SLIP-1) to SMD(SLIP-3))

Sign Mounting Designation

P = Prefab. "Plain" (see SMD(SLIP-1) to (3), SMD(TWT), SMD(FRP))
T = Prefab. "T" (see SMD(SLIP-1) to (3), SMD(TWT))
U = Prefab. "U" (see SMD(SLIP-1) to (3))
IF REQUIRED
1EXT or 2EXT = Number of Extensions (see SMD(SLIP-1) to (3), SMD(TWT))
BM = Extruded Wind Beam (see SMD(SLIP-1) to (3))
WC = 1.12 #/ft Wing Channel (see SMD(SLIP-1) to (3))
EXAL = Extruded Aluminum sign panels (see SMD(SLIP-3))

REQUIRED CLEARANCE FOR BREAKAWAY SUPPORT

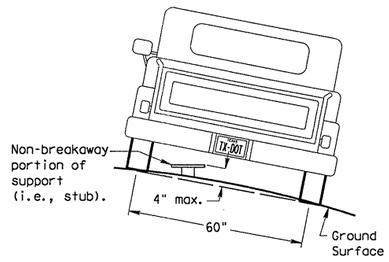

To avoid vehicle undercarriage snagging, any substantial remains of a breakaway support, when it is broken away, should not project more than 4 inches above a 60-inch chord (i.e., typical space between wheel paths).

SIGN LOCATION

PAVED SHOULDERS

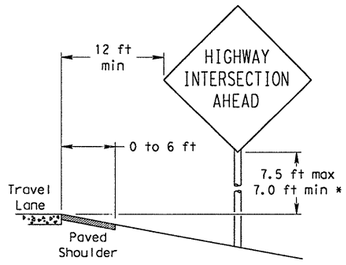

LESS THAN 6 FT. WIDE

When the shoulder is 6 ft. or less in width, the sign must be placed at least 12 ft. from the edge of the travel lane.

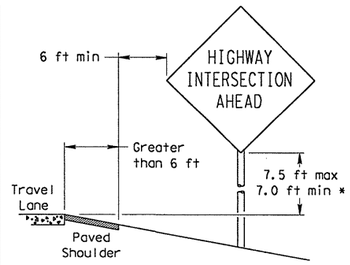

GREATER THAN 6 FT. WIDE

When the shoulder is greater than 6 ft in width, the sign must be placed at least 6 ft. from the edge of the shoulder.

T-INTERSECTION

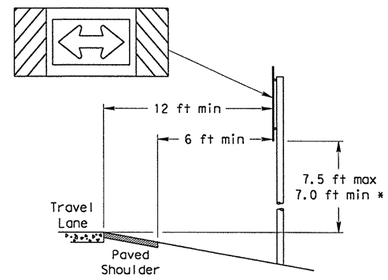

When this sign is needed at the end of a two-lane, two way roadway, the right edge of the sign should be in line with the centerline of the roadway. Place as close to ROW as practical.

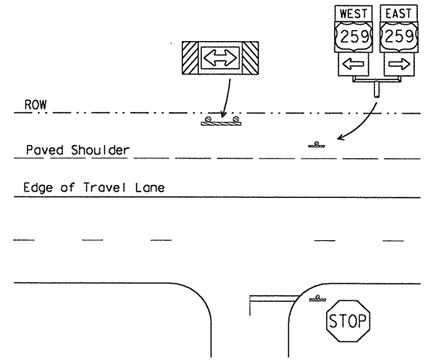

BEHIND BARRIER

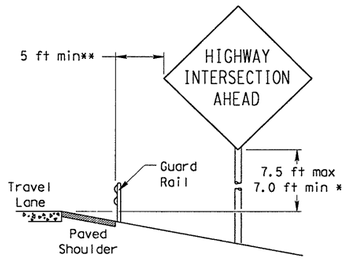

BEHIND GUARDRAIL

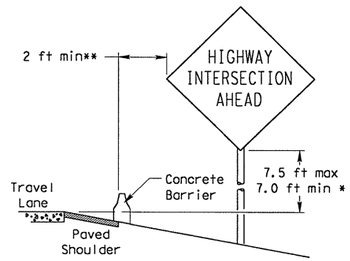

BEHIND CONCRETE BARRIER

****Sign clearance based on distance required for proper guard rail or concrete barrier performance.**

* Signs shall be mounted using the following condition that results in the greatest sign elevation:

(1) a minimum of 7 to a maximum of 7.5 feet above the edge of the travel lane or

(2) a minimum of 7 to a maximum of 7.5 feet above the grade at the base of the support when sign is installed on the backslope.

The maximum values may be increased when directed by the Engineer.

See the Traffic Operations Division website for detailed drawings of sign clamps, Texas Universal Triangular Slipbase System components and Wedge Anchor System components.

The website address is:
ftp://ftp.dot.state.tx.us/pub/txdot-info/cmd/cserve/standard/traffic/slip.pdf

No more than 2 sign posts should be located within a 7 ft. circle.

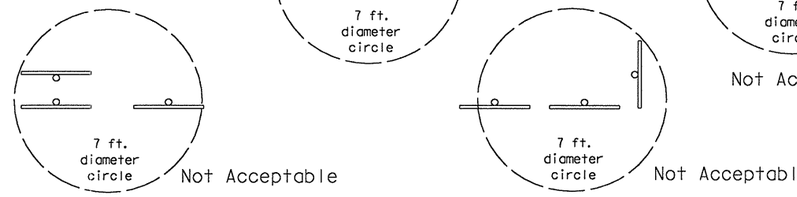

TYPICAL SIGN ATTACHMENT DETAIL

Single Signs

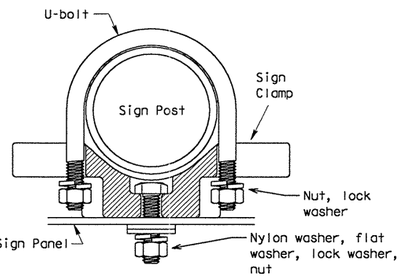

Bolts used to mount sign panels to the clamp are 5/16-18 UNC galvanized square head with nut, nylon washer, flat washer and lock washer. The bolt length is 1 inch for aluminum and 1 3/4 inch for plywood signs.

When two sign clamps are used to mount signs back-to-back, use a 5/16-18 UNC galvanized hex head per ASTM A307 with nut and helical-spring lock washer. The approximate bolt lengths for various post sizes and sign clamp types are given in the table at right. The bolt length may need to be adjusted depending upon field conditions.

Sign clamps may be either the specific size clamp or the universal clamp.

Back-to-Back Signs

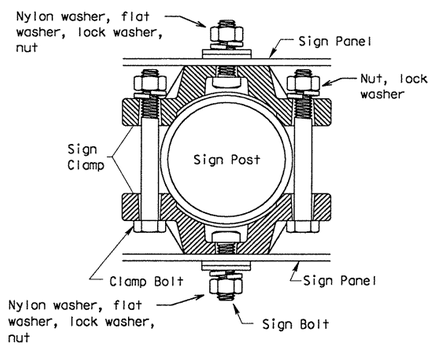

Pipe Diameter	Approximate Bolt Length	
	Specific Clamp	Universal Clamp
2" nominal	3"	3 or 3 1/2"
2 1/2" nominal	3 or 3 1/2"	3 1/2 or 4"
3" nominal	3 1/2 or 4"	4 1/2"

SIGNS WITH PLAQUES

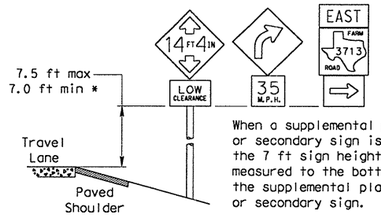

When a supplemental plaque or secondary sign is used, the 7 ft sign height is measured to the bottom of the supplemental plaque or secondary sign.

MEDIANS

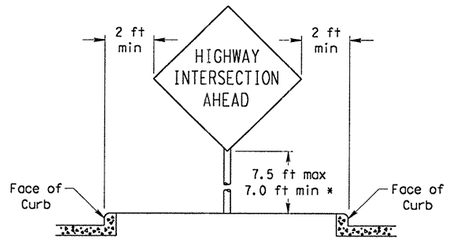

RESTRICTED RIGHT-OF-WAY

(When 6 ft min. is not possible.)

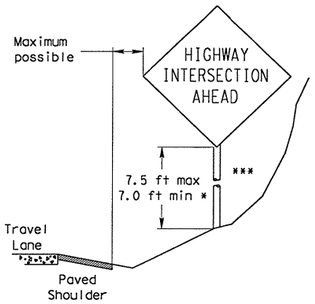

Right-of-way restrictions may be created by rocks, water, vegetation, forest, buildings, a narrow island, or other factors.

In situations where a lateral restriction prevents the minimum horizontal clearance from the edge of the travel lane, signs should be placed as far from the travel lane as practical.

*** Post may be shorter if protected by guardrail or if Engineer determines the post could not be hit due to extreme slope.

STANDARD PLANS
TEXAS DEPARTMENT OF TRANSPORTATION
Traffic Operations Division

SIGN MOUNTING DETAILS SMALL ROADSIDE SIGNS GENERAL NOTES & DETAILS

SMD(GEN)-02

©TxDOT July 2002	DN: BAS	CK: GRB	DW: FDN	CK: CAL
REVISIONS	STATE DISTRICT: AUS	FEDERAL REGION: 6	FEDERAL AID PROJECT: CC 337-1-29	SHEET: 141
	COUNTY: WILLIAMSON	CONTROL: 0337	SECTION: 01	JOB: 029	HIGHWAY: SH 29

...\signing_striping\smd2002.dgn 09/21/2004 10:44:04 AM

Texas Universal Triangular Slipbase System

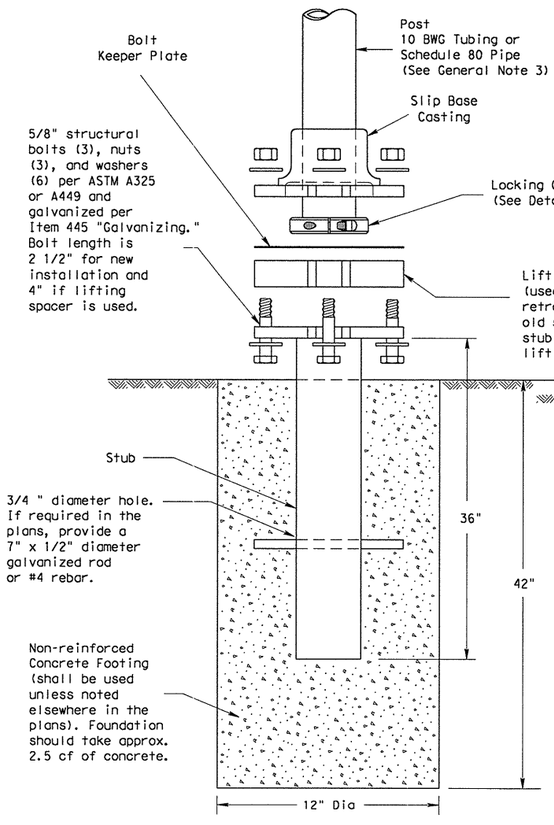

SM RD SGN ASSM TY XXXXX(X)SA(X-XXXX)

Concrete anchor consists of 5/8" diameter stud bolt with UNC series bolt threads on the upper end. Heavy hex nut per ASTM A563, and hardened washer per ASTM F436. The stud bolt shall have minimum yield and ultimate tensile strengths of 50 and 75 KSI, respectively. Nuts, bolts and washers shall be galvanized per Item 445, "Galvanizing." Top of bolt shall extend at least flush with top of the nut when installed. The anchor, when installed in 4000 psi normal-weight concrete with a 5 1/2" minimum embedment, shall have a minimum allowable tension and shear of 3900 and 3100 psi, respectively. Adhesive type anchors shall have stud bolts installed with Type III epoxy per DMS-6100, "Epoxies and Adhesives." Adhesive anchors may be loaded after adequate epoxy cure time, per the manufacturer's recommendations.

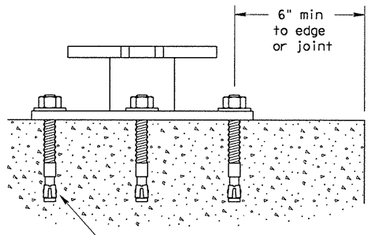

SM RD SGN ASSM TY XXXXX(X)SB(X-XXXX)

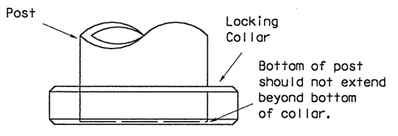

Detail E

ROLL PIN (Optional)

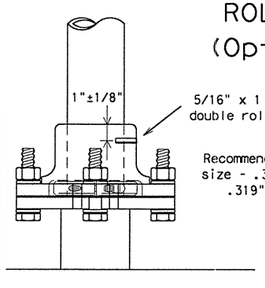

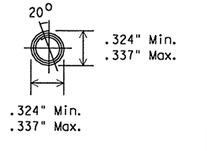

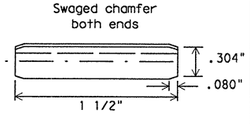

If shown in plans, the Engineer may require the roll pin to be installed to reduce possible sign rotation.

DOUBLE ROLL PIN DETAIL

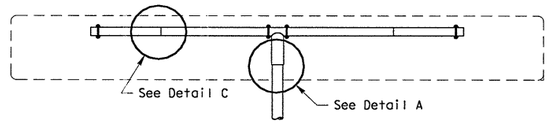

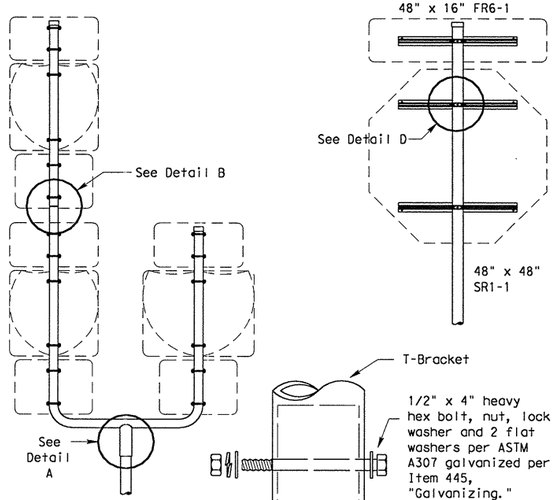

Detail A

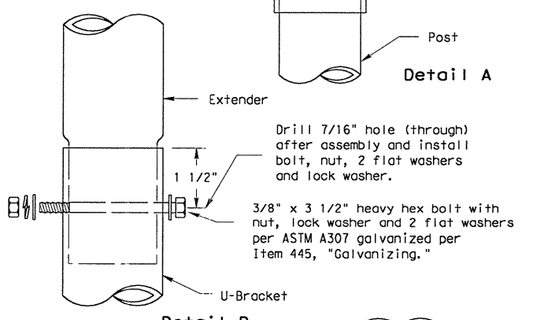

Detail B

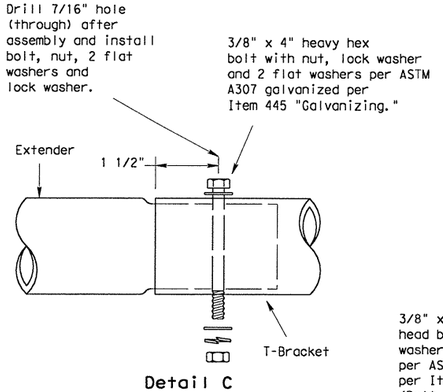

Detail C

Splices shall only be allowed behind the sign substrate.

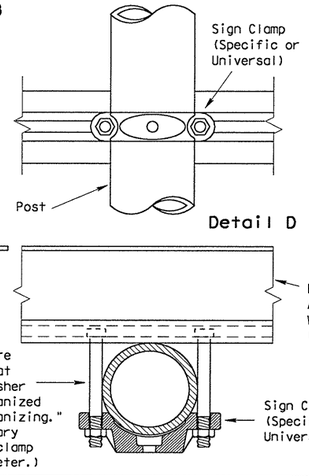

Detail D

GENERAL NOTES:

1. Finished components, except posts (10 BWG Tubing and Schedule 80 Pipe) and clamps, shall be permanently marked to indicate manufacturer. Method, design, and location of marking are subject to approval of the TxDOT Traffic Standards Engineer.
2. Except for posts (10 BWG Tubing and Schedule 80 Pipe), clamps, nuts and bolts, all components shall be prequalified. A list of prequalified vendors may be obtained from the TxDOT Traffic Standards Engineer, or the Traffic Operations Division website. The website address is: http://www.dot.state.tx.us/insdtdot/orgchart/trf/trfeng/
3. Material used as post with this system shall conform to the following specifications:
   10 BWG Tubing (2.875" outside diameter)
   - 0.134" nominal wall thickness
   - Seamless or electric-resistance welded steel tubing or pipe
   - Steel shall be HSLAS Gr 55 per ASTM A1011 or ASTM A1008
   - Other steels may be used if they meet the following:
     - 55,000 PSI minimum yield strength
     - 70,000 PSI minimum tensile strength
     - 20% minimum elongation in 2"
   - Wall thickness (uncoated) shall be within the range of 0.122" to 0.138"
   - Outside diameter (uncoated) shall be within the range of 2.867" to 2.883"
   - Galvanization per ASTM A123 or ASTM A653 G210. For precoated steel tubing (ASTM A653), recoat tube outside diameter weld seam by metallizing with zinc wire per ASTM B833.

   Schedule 80 Pipe (2.875" outside diameter)
   - 0.276" nominal wall thickness
   - Steel tubing per ASTM A500 Gr C
   - Other seamless or electric-resistance welded steel tubing or pipe with equivalent outside diameter and wall thickness may be used if they meet the following:
     - 46,000 PSI minimum yield strength
     - 62,000 PSI minimum tensile strength
     - 21% minimum elongation in 2"
   - Wall thickness (uncoated) shall be within the range of 0.248" to 0.304"
   - Outside diameter (uncoated) shall be within the range of 2.855" to 2.895"
   - Galvanization per ASTM A123
4. See the Traffic Operations Division website for detailed drawings of sign clamps and Texas Universal Triangular Slipbase System components. The website address is: ftp://ftp.dot.state.tx.us/pub/txdot-info/cmd/cserve/standard/traffic/slip.pdf
5. Sign supports shall not be spliced except where shown. Sign support posts shall not be spliced.

ASSEMBLY PROCEDURE

Foundation

1. Prepare 12-inch diameter by 42-inch deep hole. If solid rock is encountered, the depth of the foundation may be reduced such that it is embedded a minimum of 18 inches into the solid rock.
2. Thoroughly wet and mix concrete in a container. Place concrete into hole until it is approximately flush with the ground.
3. Push the pipe end of the slip base stub into the center of the concrete. Rotate the stub back and forth while pushing it down into the concrete to assure good contact between the concrete and stub. Continue to work the stub into the concrete until it is between 2 to 4 inches above the ground. The upper value assures that an impacting vehicle should not snag on the footing. The lower value provides clearance for assembly.
4. Plumb the stub by using a torpedo level on the slip plate. Allow concrete adequate time to set.

Support

1. Cut support so that the bottom of the sign will be 7 to 7.5 feet above the edge of the travelway (i.e., edge of the closest lane) when slip plate is below the edge of pavement or 7 to 7.5 feet above slip plate when the slip plate is above the edge of the travelway. The cut shall be plumb and straight.
2. Attach sign to support using connections shown. When multiple signs are installed on the same support, ensure the minimum clearance between each sign is maintained. See SMD(SLIP-2) for clearances based on sign types.
3. Slide the slipbase casting onto the lower end of the sign support.
4. Drive a chisel or a flat-blade screwdriver into the cut on the locking collar to slightly pry the collar open. Slide the collar onto the end of the pipe so the edge of the pipe is between the face of the locking collar and the end of the edge bevel. A dead-blow hammer may be useful in positioning the collar correctly. Remove the tool used to pry the collar open. Torque the allen bolt to 60 foot-pounds (720 inch-pounds). DO NOT OVERTIGHTEN.
5. Place and align bolt keeper plate on slip plate and lift assembled sign and support into position.
6. Place one washer on each bolt and insert them through keeper plate and the notches on the slip plate and casting. After inserting each bolt, place one washer and a nut on the bolt and hand-tighten all three.
7. The breakaway features of this system will work when all three bolts are tightened between 40 to 80 foot-pounds (480 to 960 inch-pounds). The Engineer shall determine the appropriate bolt torque for each project. Tighten all bolts by working around the support in approximately 10 foot-pound increments to assure a balanced tension in the bolts. All three bolts shall be torqued the same. DO NOT OVERTIGHTEN.

STANDARD PLANS
Texas Department of Transportation
Traffic Operations Division

SIGN MOUNTING DETAILS SMALL ROADSIDE SIGNS TRIANGULAR SLIPBASE SYSTEM

SMD(SLIP-1)-02

©TxDOT July 2002	DN: BAS	CK: GRB	DW: FDN	CK: CAL
REVISIONS	STATE DISTRICT	FEDERAL REGION	FEDERAL AID PROJECT	SHEET
	AUS	6	CC 337-1-29	142
	COUNTY		CONTROL	SECTION	JOB	HIGHWAY
	WILLIAMSON		0337	01	029	SH 29

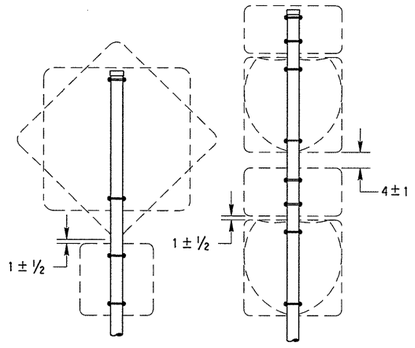

SM RD SGN ASSM TY XXXXX(1)XX(P)

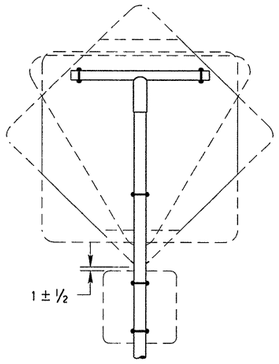

SM RD SGN ASSM TY XXXXX(1)XX(T)

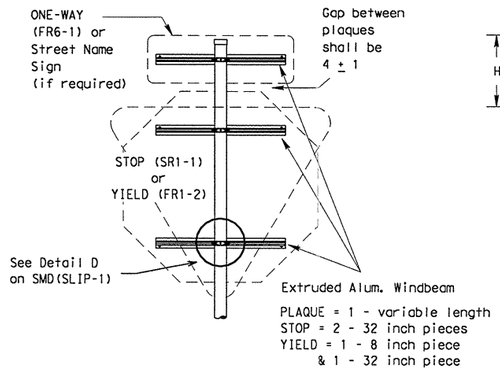

SM RD SGN ASSM TY XXXXX(1)XX(P-BM)

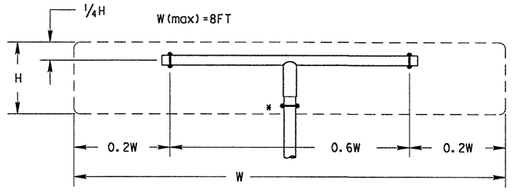

SM RD SGN ASSM TY XXXXX(1)XX(T)
(* - See Note 13)

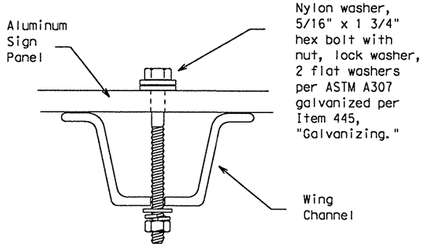

Top View

Detail A

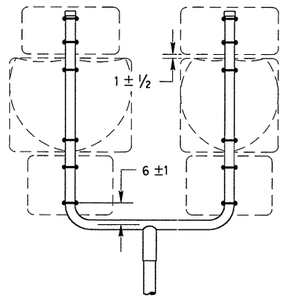

SM RD SGN ASSM TY XXXXX(1)XX(U)

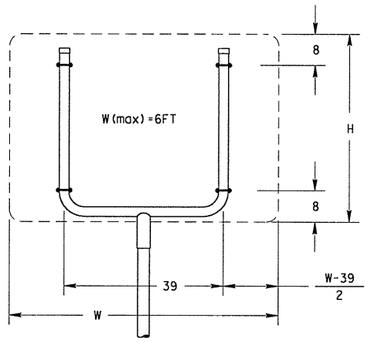

SM RD SGN ASSM TY XXXXX(1)XX(U)

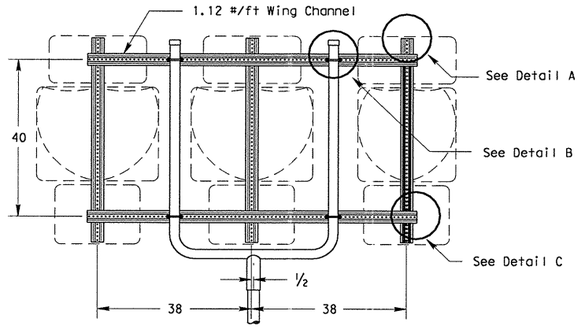

SM RD SGN ASSM TY XXXXX(1)XX(U-WC)
(See Note 12)

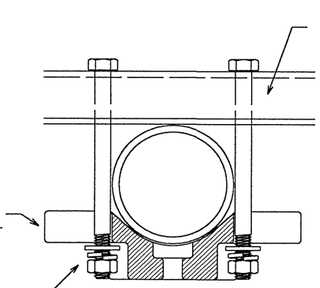

Top View

Detail B

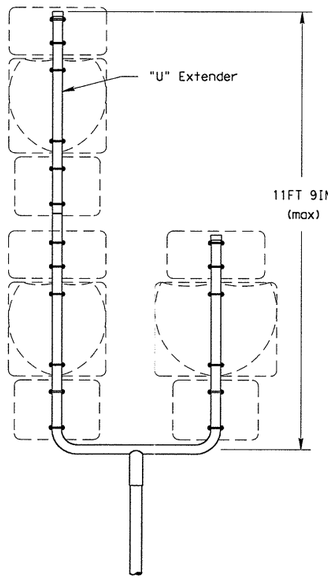

SM RD SGN ASSM TY S80(1)XX(U-1EXT)

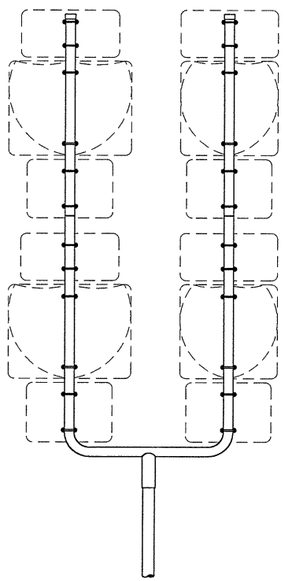

SM RD SGN ASSM TY S80(1)XX(U-2EXT)

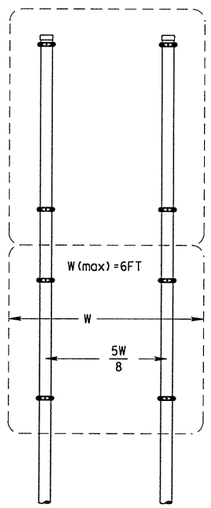

SM RD SGN ASSYM TY XXXXX(2)XX(P)

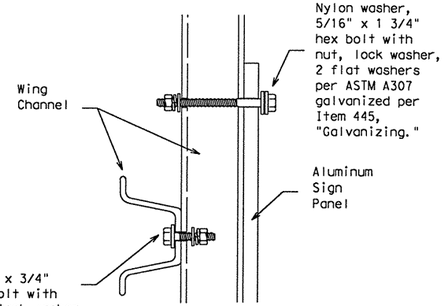

Side View

Detail C

GENERAL NOTES:

1.

SIGN SUPPORT	# OF POSTS	MAX. SIGN AREA
10 BWG	1	16 SF
10 BWG	2	32 SF
Sch 80	1	32 SF
Sch 80	2	64 SF

2. The Engineer may require that a Schedule 80 post be used in place of a 10 BWG where a sign height is abnormally high due to a fill slope.
3. Sign supports shall not be spliced except where shown. Sign support posts shall not be spliced.
4. Aluminum sign blanks shall conform to Departmental Material Specifications DMS-7110 and shall have the following minimum thicknesses: 0.080 for signs less than 7.5 sq. ft., 0.100 for signs 7.5 to 15 sq. ft., and 0.125 for signs greater than 15 sq. ft.
5. Plywood signs shall conform to Departmental Material Specification DMS-7100 and shall be 5/8 inches thick.
6. Signs that require specific supports due to reasons in addition to windloading are indicated on the "REQUIRED SUPPORT" table on this sheet.
7. For horizontal rectangular signs, T-brackets are used for signs 24 inches or less in height. U-brackets are used for signs of greater height.
8. When two triangular slipbase supports are used to support a single sign, they shall not be "rigidly" connected to each other except through the sign panel. This will allow each support to act independently when impacted by an errant vehicle.
9. Wing channel shall meet ASTM A 1011 SS Gr 50 and be galvanized per ASTM A 123.
10. Excess pipe, winged channel, or windbeam shall be cut off so that it does not extend beyond the sign panel (i.e., excess support shall not be visible when the sign is viewed from the front.) Repair galvanized coating at cut support ends per Item 445, "Galvanizing."
11. The Engineer may allow the use of an expanded foam foundation. A list of approved suppliers of expanding foam may be obtained from the Traffic Operations Division (TRF) or from the TRF website. The website address is: http://www.dot.state.tx.us/insdtdot/orgchart/trf/trfeng/
12. Additional route markers may be added vertically, provided the total sign area does not exceed the maximum allowable amount per Note 1.
13. Additional sign clamp required on the "T-bracket" post for 24 inch high signs. Place the clamp 3 inches above bottom of sign when possible.

REQUIRED SUPPORT

	SIGN DESCRIPTION	SUPPORT
Regulatory	48-inch STOP sign (SR1-1)	TY 10BWG(1)XX(T) TY 10BWG(1)XX(P-BM)
	60-inch YIELD sign (FR1-2)	TY 10BWG(1)XX(T) TY 10BWG(1)XX(P-BM)
	48x16-inch ONE-WAY sign (FR6-1)	TY 10BWG(1)XX(T) TY 10BWG(1)XX(P-BM)
	36x48, 48x36, and 48x48-inch signs	TY 10BWG(1)XX(T)
	48x60-inch signs	TY S80(1)XX(T)
Warning	48x48-inch signs (diamond or square)	TY 10BWG(1)XX(T)
	48x60-inch signs	TY S80(1)XX(T)
	48-inch Advance School X-ing sign (SS1-1)	TY 10BWG(1)XX(T)
	48-inch School X-ing sign (SS2-1)	TY 10BWG(1)XX(T)
	Large Arrow sign (W1-6 & W1-7)	TY 10BWG(1)XX(T)

STANDARD PLANS
Texas Department of Transportation
Traffic Operations Division

SIGN MOUNTING DETAILS SMALL ROADSIDE SIGNS TRIANGULAR SLIPBASE SYSTEM

SMD(SLIP-2)-02

© TxDOT July 2002

DN: BAS	CK: GRB	DW: FDN	CK: CAL

REVISIONS	STATE DISTRICT	FEDERAL REGION	FEDERAL AID PROJECT	SHEET
	AUS	6	CC 337-1-29	143

COUNTY	CONTROL	SECTION	JOB	HIGHWAY
WILLIAMSON	0337	01	029	SH 29

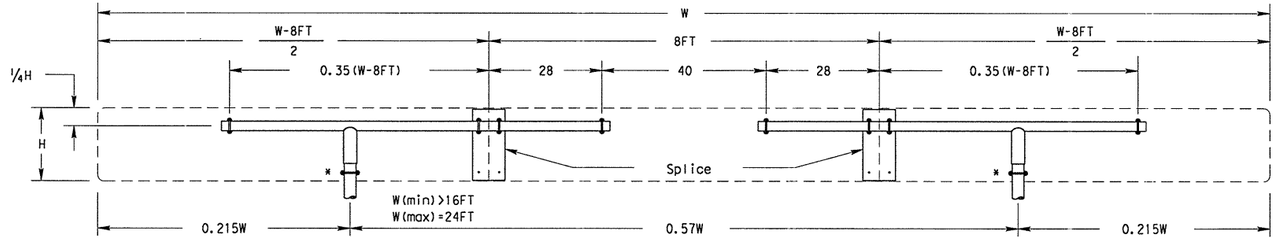

SM RD SGN ASSM TY XXXXX(2)XX(T-2EXT)

(* - See Note 13)

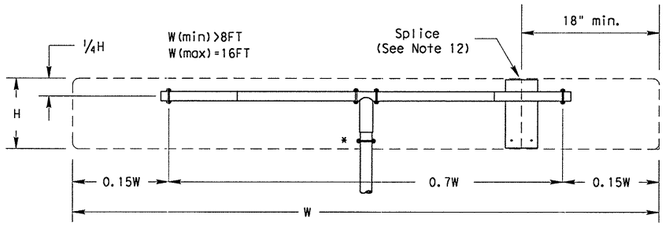

SM RD SGN ASSM TY XXXXX(1)XX(T-2EXT)

(* - See Note 13)

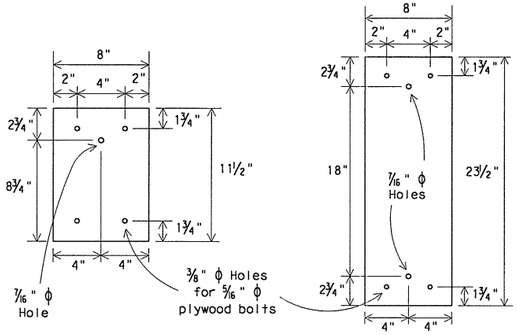

Splice Plates

Splice plates shall be 1/8 " steel plate (ASTM A36) or 1/8 " aluminum plate (ASTM B209 ALLOY 6061-T6 or 5052-H38). Steel shall be galvanized in accordance with ASTM A123.

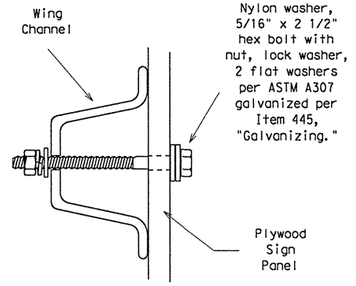

Side View

Detail B

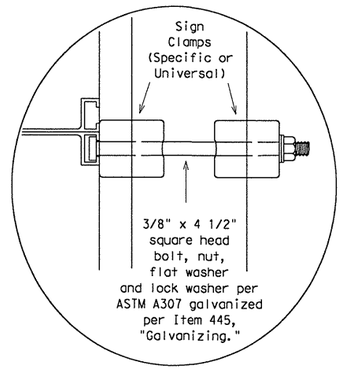

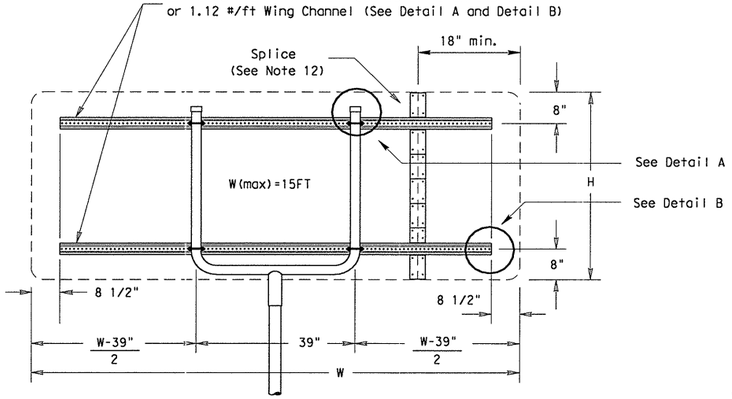

SM RD SGN ASSM TY XXXXX(1)XX(U-XX)

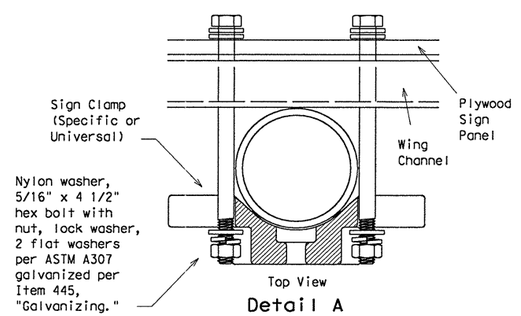

Detail A

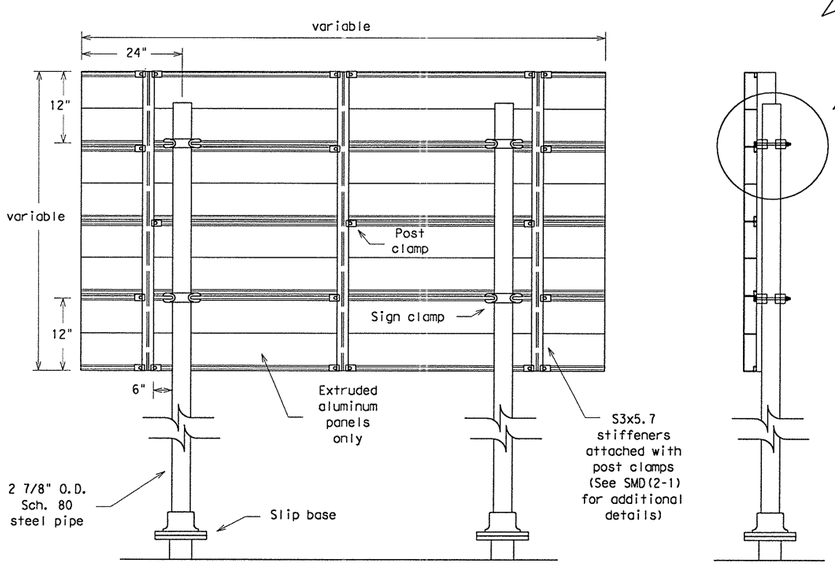

Typical Extruded Aluminum Sign Mount

SM RD SGN ASSM TY S80(2)XX(P-EXAL)

GENERAL NOTES:

1.

SIGN SUPPORT	# OF POSTS	MAX. SIGN AREA
10 BWG	1	16 SF
10 BWG	2	32 SF
Sch 80	1	32 SF
Sch 80	2	64 SF

2. The Engineer may require that a Schedule 80 post be used in place of a 10 BWG where a sign height is abnormally high due to a fill slope.
3. Sign supports shall not be spliced except where shown. Sign support posts shall not be spliced.
4. Aluminum sign blanks shall conform to Departmental Material Specifications DMS-7110 and shall have the following minimum thicknesses: 0.080 for signs less than 7.5 sq. ft., 0.100 for signs 7.5 to 15 sq. ft., and 0.125 for signs greater than 15 sq. ft.
5. Plywood signs shall conform to Departmental Material Specification DMS-7100 and shall be 5/8 inches thick.
6. Signs that require specific supports due to reasons in addition to windloading are indicated on the "REQUIRED SUPPORT" table on this sheet.
7. For horizontal rectangular signs, T-brackets are used for signs 24 inches or less in height. U-brackets are used for signs of greater height.
8. When two triangular slipbase supports are used to support a single sign, they shall not be "rigidly" connected to each other except through the sign panel. This will allow each support to act independently when impacted by an errant vehicle.
9. Wing channel shall meet ASTM A 1011 SS Gr 50 and be galvanized per ASTM A 123.
10. Excess pipe, winged channel, or windbeam shall be cut off so that it does not extend beyond the sign panel (i.e., excess support shall not be visible when the sign is viewed from the front.) Repair galvanized coating at cut support ends per Item 445, "Galvanizing."
11. The Engineer may allow the use of an expanded foam foundation. A list of approved suppliers of expanding foam may be obtained from the Traffic Operations Division (TRF) or from the TRF website. The website address is: http://www.dot.state.tx.us/insdtdot/orgchart/trf/trfeng/
12. Sign blanks shall be the sizes and shapes shown on the plans. Unless otherwise shown, no panel on multi-panel plywood signs shall have a dimension less than 18 inches. Plywood signs 4 feet by 8 feet or smaller in either dimension shall be of one piece construction.
13. Additional sign clamp required on the "T-bracket" post for 24 inch high signs. Place the clamp 3 inches above bottom of sign when possible.

REQUIRED SUPPORT		
	SIGN DESCRIPTION	SUPPORT
Regulatory	48-inch STOP sign (SR1-1)	TY 10BWG(1)XX(T) TY 10BWG(1)XX(P-BM)
Regulatory	60-inch YIELD sign (FR1-2)	TY 10BWG(1)XX(T) TY 10BWG(1)XX(P-BM)
Regulatory	48x16-inch ONE-WAY sign (FR6-1)	TY 10BWG(1)XX(T) TY 10BWG(1)XX(P-BM)
Regulatory	36x48, 48x36, and 48x48-inch signs	TY 10BWG(1)XX(T)
Regulatory	48x60-inch signs	TY S80(1)XX(T)
Warning	48x48-inch signs (diamond or square)	TY 10BWG(1)XX(T)
Warning	48x60-inch signs	TY S80(1)XX(T)
Warning	48-inch Advance School X-ing sign (SS1-1)	TY 10BWG(1)XX(T)
Warning	48-inch School X-ing sign (SS2-1)	TY 10BWG(1)XX(T)
Warning	Large Arrow sign (W1-6 & W1-7)	TY 10BWG(1)XX(T)

STANDARD PLANS
Texas Department of Transportation
Traffic Operations Division

SIGN MOUNTING DETAILS SMALL ROADSIDE SIGNS TRIANGULAR SLIPBASE SYSTEM

SMD(SLIP-3)-02

©TxDOT July 2002

DN: - BAS	CK: - GRB	DW: - FDN	CK: - CAL

REVISIONS	STATE DISTRICT	FEDERAL REGION	FEDERAL AID PROJECT	SHEET
	AUS	6	CC 337-1-29	144

COUNTY	CONTROL	SECTION	JOB	HIGHWAY
WILLIAMSON	0337	01	029	SH 29

Wedge Anchor System

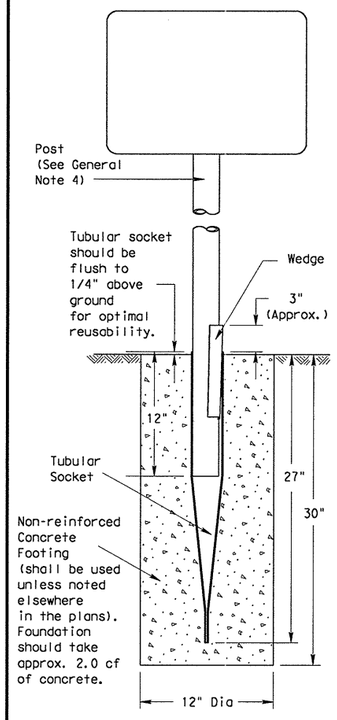

SM RD SGN ASSM TY TWT(X)WA(P)

Universal Anchor System with Thin-Walled Tubing Post

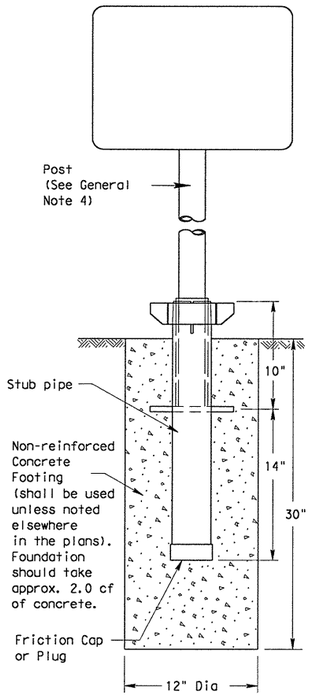

SM RD SGN ASSM TY TWT(X)UA(P)

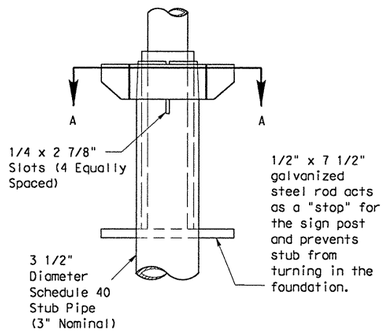

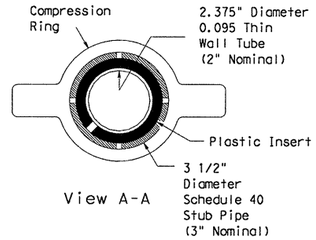

Plastic insert must be used when using the TWT with either the Universal Anchor System or the Bolt Down Universal Anchor System. The insert should be approx. 10" long and cover the tubing from just above the top of the stub pipe to the bottom of the sign post when using the Universal Anchor System. The insert should be cut to approx. 4 1/2" when used with the Bolt Down Universal Anchor System.

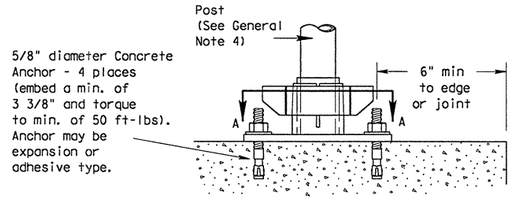

Concrete anchor consists of 5/8" diameter stud bolt with UNC series bolt threads on the upper end. A heavy hex nut per ASTM A563 and hardened washer per ASTM F436. The stud bolt shall have minimum yield and ultimate tensile strengths of 50 and 75 ksi, respectively. Nuts, bolts and washers shall be galvanized per Item 445, "Galvanizing." Top of bolt shall extend at least flush with top of nut when installed. The anchor, when installed in 4000 psi normal-weight concrete with a 3 3/8" minimum embedment, shall have a minimum allowable tension and shear of 2450 and 1525 psi, respectively. Adhesive type anchors shall have stud bolts installed with Type III epoxy per DMS-6100, "Epoxies and Adhesives." Adhesive anchors may be loaded after adequate epoxy cure time per the manufacturer's recommendations.

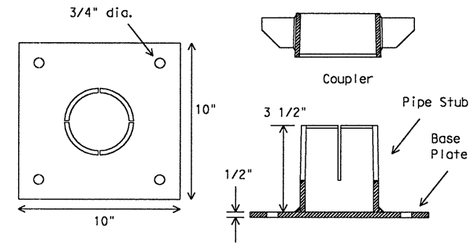

SM RD SGN ASSM TY TWT(X)UB(P)

Sign Installation Using a Prefabricated T-Bracket for Thin-Wall Tubing Post

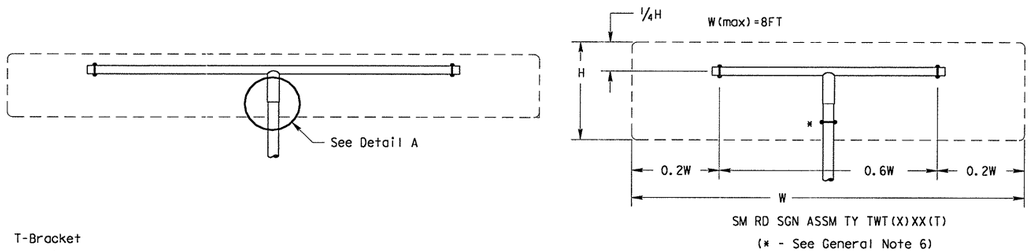

SM RD SGN ASSM TY TWT(X)XX(T)

(* - See General Note 6)

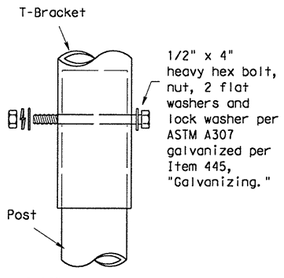

Detail A

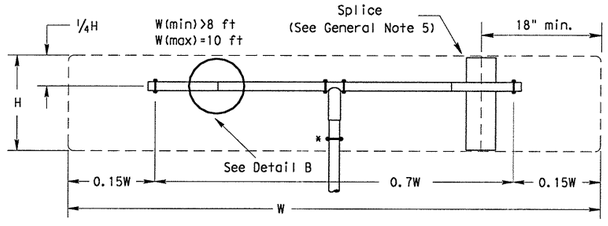

SM RD SGN ASSM TY TWT(X)XX(T-2EXT)

(* - See General Note 6)

For horizontal rectangular signs, T-brackets may be used for signs up to 24" in height. Square footage of signs may not exceed 10 sf on this system.

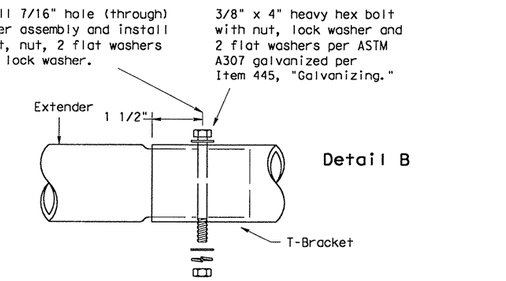

Detail B

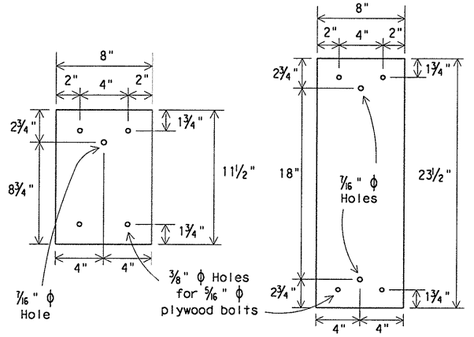

Splice Plates

Splice plates shall be 1/8" steel plate (ASTM A36) or 1/8" aluminum plate (ASTM B209 ALLOY 6061-T6 or 5052-H38.) Steel shall be galvanized in accordance with ASTM A123.

GENERAL NOTES:

1. The Wedge Anchor System and the Universal Anchor System with thin wall tubing post may be used to support up to 10 square feet of sign area.
2. The tubular socket, wedge and prefabricated T-bracket shall be permanently marked to indicate manufacturer. Method, design, and location of marking are subject to the approval of the TxDOT Traffic Standards Engineer.
3. Except for posts (13 BWG Tubing), clamps, nuts and bolts, all components shall be prequalified. A list of prequalified vendors may be obtained from the TxDOT Traffic Standards Engineer, or the Traffic Operations Division website. The website address is: http://www.dot.state.tx.us/insdtdot/orgchart/trf/trfeng
4. Material used as post with this system shall conform to the following specifications:
   13 BWG Tubing (2.375" outside diameter)
   - 0.095" nominal wall thickness
   - Seamless or electric-resistance welded steel tubing
   - Steel shall be HSLAS Gr 55 per ASTM A1011 or ASTM A1008
   - Other steels may be used if they meet the following:
     - 55,000 PSI minimum yield strength
     - 70,000 PSI minimum tensile strength
     - 18% minimum elongation in 2"
   - Wall thickness (uncoated) shall be within the range of .083" to .099"
   - Outside diameter (uncoated) shall be within the range of 2.369" to 2.381"
   - Galvanization per ASTM 123 or ASTM A653 G210. For precoated steel tubing (ASTM A653), recoat tube outside diameter weld seam by metallizing with zinc wire per ASTM B833.
5. Sign blanks shall be the sizes and shapes shown on the plans. Unless otherwise shown, no panel on multipanel plywood signs shall have a dimension less than 18 inches. Plywood signs 4 feet by 8 feet or smaller in either dimension shall be of one piece construction.
6. Additional sign clamp required on the "T-bracket" post for 24" high signs. Place clamp at least 3" above bottom of sign when possible.
7. Sign supports shall not be spliced except where shown. Sign support posts shall not be spliced.
8. See the Traffic Operations Division website for detailed drawings of sign clamps and Wedge Anchor System components. The website address is: ftp://ftp.dot.state.tx.us/pub/txdot-info/cmd/cserve/standard/traffic/slip.pdf

WEDGE ANCHOR SYSTEM INSTALLATION PROCEDURE

1. Dig foundation hole. Where solid rock is encountered at ground level, the foundation shall be a minimum depth of 18". When solid rock is encountered below ground level, the foundation shall extend in the solid rock a minimum depth of 18" or provide a minimum foundation depth of 30". If solid rock is encountered, the socket/stub may be reduced in length as required to a minimum length of 18". Any material removed from the socket/stub shall be from the bottom and the clearance requirements given on SMD(GEN) must be followed. The inner surfaces of the socket/stub must remain free of concrete or other debris.
2. Thoroughly wet and mix concrete in a container. Place concrete into hole until it is approximately flush with the ground.
3. Insert tubular socket into concrete until top of socket is approximately 1/4 " above the concrete footing.
4. Plumb the socket and allow concrete adequate time to set.
5. Attach the sign to the sign post.
6. Insert the sign post into socket and align sign face with roadway.
7. Drive the wedge into the socket to secure post. This will leave approximately 3 inches of the wedge exposed.

UNIVERSAL ANCHOR SYSTEM INSTALLATION PROCEDURE

1. Dig foundation hole. Where solid rock is encountered at ground level, the foundation shall be a minimum depth of 18". When solid rock is encountered below ground level, the foundation shall extend in the solid rock a minimum depth of 18" or provide a minimum foundation depth of 30". If solid rock is encountered, the socket/stub may be reduced in length as required to a minimum length of 18". Any material removed from the socket/stub shall be from the bottom and the clearance requirements given on SMD(GEN) must be followed. The inner surfaces of the socket/stub must remain free of concrete or other debris.
2. Insert base post in hole to depths shown and backfill hole with concrete.
3. Level and plumb the base post using a torpedo level and allow concrete adequate time to set. The bottom of the slots provided in the stub pipe shall remain above the top of the concrete foundation.
4. Attach the sign to the sign post.
5. Install plastic insert around bottom of post.
6. Insert sign post into base post. Lower until the post comes to rest on steel rod.
7. Seat compression ring using a hammer. Typically, the top of compression ring will be approximately level with top of stub post when optimally installed.
8. Check sign post by hand to ensure it is unable to turn. If loose, increase the tightening of the compression ring.

STANDARD PLANS
TEXAS DEPARTMENT OF TRANSPORTATION
Traffic Operations Division

SIGN MOUNTING DETAILS SMALL ROADSIDE SIGNS WEDGE & UNIVERSAL ANCHOR WITH THIN WALL TUBING POST

SMD(TWT)-02

©TxDOT July 2002

DN: BAS	CK: GRB	DW: FDN	CK: CAL

REVISIONS	STATE DISTRICT	FEDERAL REGION	FEDERAL AID PROJECT	SHEET
	AUS	6	CC 337-1-29	145

COUNTY	CONTROL	SECTION	JOB	HIGHWAY
WILLIAMSON	0337	01	029	SH 29

TWO LANE TWO-WAY ROADWAY WITH OR WITHOUT SHOULDERS

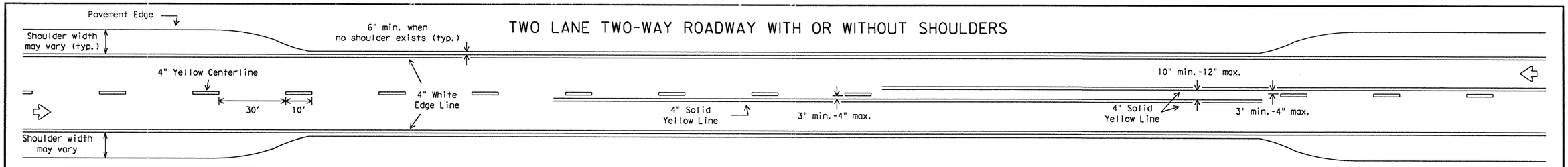

CENTERLINE AND LANE LINES FOUR LANE TWO-WAY ROADWAY WITH OR WITHOUT SHOULDERS

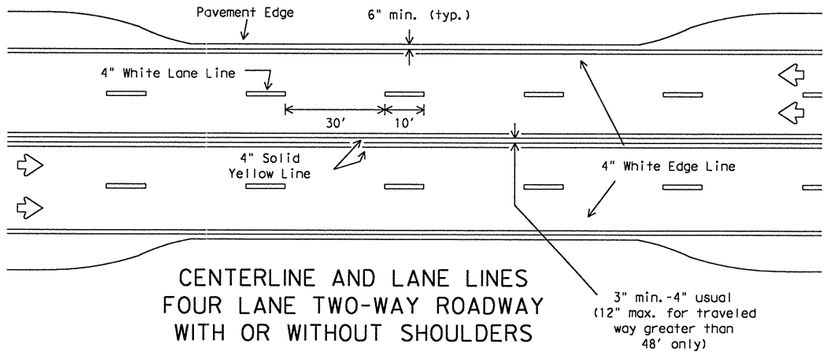

EDGE LINE AND LANE LINES ONE-WAY ROADWAY WITH OR WITHOUT SHOULDERS

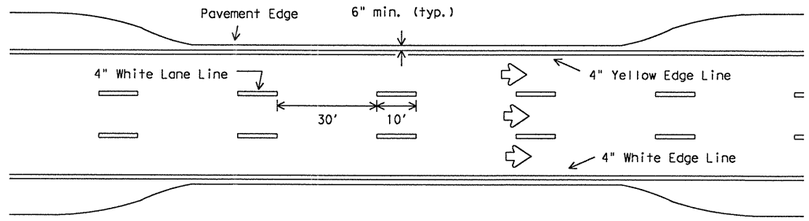

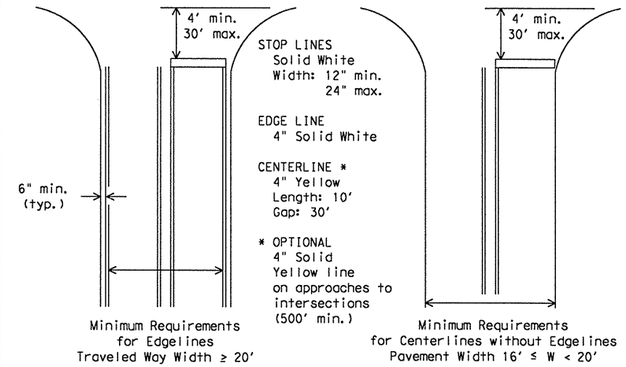

GUIDE FOR PLACEMENT OF STOP LINES, EDGE LINE & CENTERLINE

Based on Traveled Way and Pavement Widths for Undivided Highways

FOUR LANE DIVIDED ROADWAY INTERSECTIONS

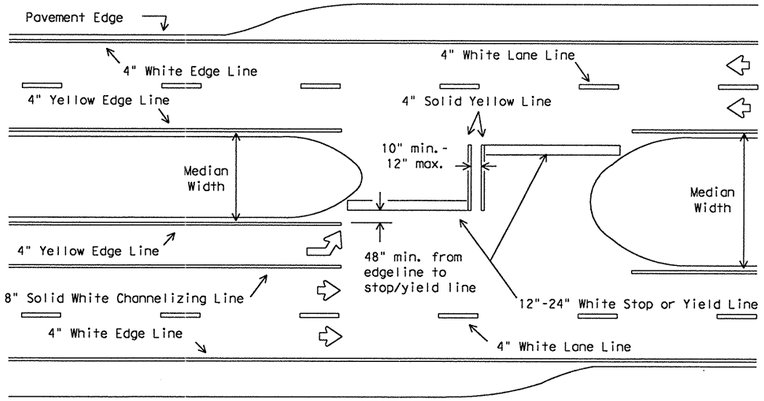

All medians shall be field measured to determine the location of necessary striping. Stop/Yield bars and centerlines shall be placed when the median width is greater than 30 ft. The median width is defined as the area between two roadways of a divided highway measured from edge of traveled way to edge of traveled way. The median excludes turn lanes. The median width might be different between intersections, interchanges and of opposite approaches of the same intersection. The narrow median width will be the controlling width to determine if markings are required.

ROADWAYS WITH REDUCED SHOULDER WIDTHS ACROSS BRIDGE OR CULVERT

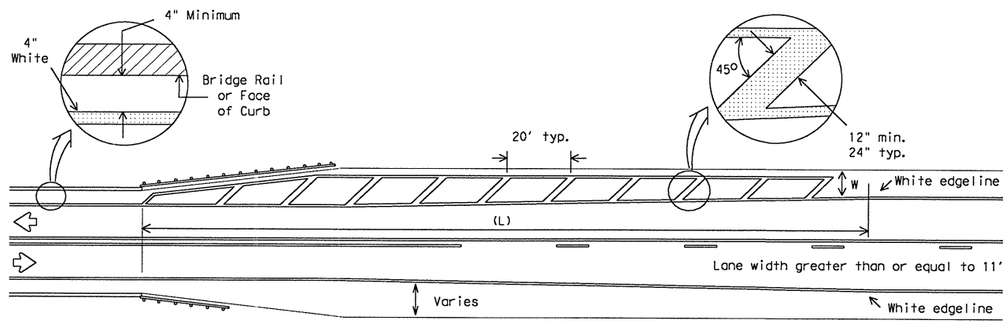

NOTES:

1. No-passing zone on bridge approach is optional but if used, it shall be a minimum 500 feet long.
2. For crosshatching length (L) see Table 1.
3. The width of the offset (W) and the required crosshatching width is the full shoulder width in advance of the bridge.
4. The crosshatching should be required if the shoulder width in advance of the bridge is 4 foot or wider and any reduction in shoulder width across the bridge occurs.
5. For guard fence details, refer elsewhere in the plans.

TABLE 1 - TYPICAL LENGTH (L)

Posted Speed *	Formula
30, 35, 40	$L = \frac{WS^2}{60}$
45, 50, 55, 60, 65, 70	L=WS

* 85th Percentile Speed may be used on roads where traffic speeds normally exceed the posted speed limit. Crosshatching length should be rounded up to nearest 5 foot increment.

L=Length of Crosshatching (FT.) W=Width of Offset (FT.) S=Posted Speed (MPH)

EXAMPLES:

An 8 foot shoulder in advance of a bridge reduces to 4 feet on a 70 MPH roadway. The length of the cross-hatching should be:

$L = 8 \times 70 = 560$ ft.

A 4 foot shoulder in advance of a bridge reduces to 2 feet on a 40 MPH roadway. The length of the cross-hatching should be:

$L = 4(40)^2 / 60 = 106.67$ ft. rounded to 110 ft.

GENERAL NOTES:

Edgeline striping shall be as shown in the plans or as directed by the Engineer. The edgeline should typically be placed a minimum of 6 inches from the edge of pavement. This distance may vary due to pavement raveling or other conditions. Edgelines are not required in curb and gutter sections of roadways.

The traveled way includes only that portion of the roadway used for vehicular travel and not the parking lanes, sidewalks, berms and shoulders. The traveled ways shall be measured from the inside of edgeline to inside of edgeline of a two lane roadway.

All pavement marking materials shall meet the required Departmental Material Specifications as specified by the plans.

SPECIFICATION REFERENCE TABLE

MATERIAL SPECIFICATIONS	
PAVEMENT MARKERS (REFLECT.)	DMS-4200
EPOXY	DMS-6100
BITUMINOUS ADHESIVE FOR PAVEMENT MARKERS	DMS-6130

YIELD LINES

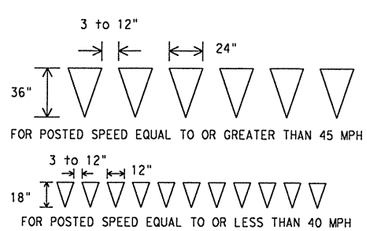

STANDARD PLANS
Texas Department of Transportation
Traffic Operations Division

TYPICAL STANDARD PAVEMENT MARKINGS

PM(1)-03

© TxDOT November 1978	DN: - BAS	CK: - GRB	DW: - FDN	CK: - CAL	NEG NO.:

REVISIONS	STATE DISTRICT	FEDERAL REGION	FEDERAL AID PROJECT	SHEET
8-95	AUS	6	CC 337-1-29	146
5-00				
8-00	COUNTY	CONTROL	SECTION	JOB	HIGHWAY
3-03	WILLIAMSON	0337	01	029	SH 29

...\signing_striping\pm03.dgn 09/21/2004 10:44:02 AM

REFLECTIVE RAISED PAVEMENT MARKERS FOR VEHICLE POSITIONING GUIDANCE

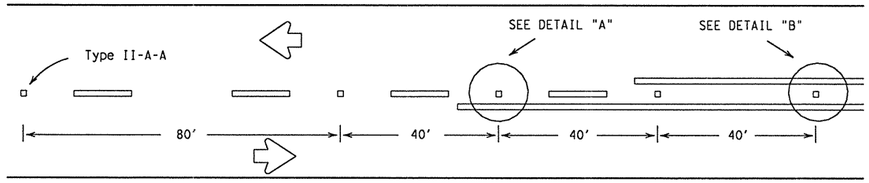

CENTERLINE FOR ALL TWO LANE ROADWAYS

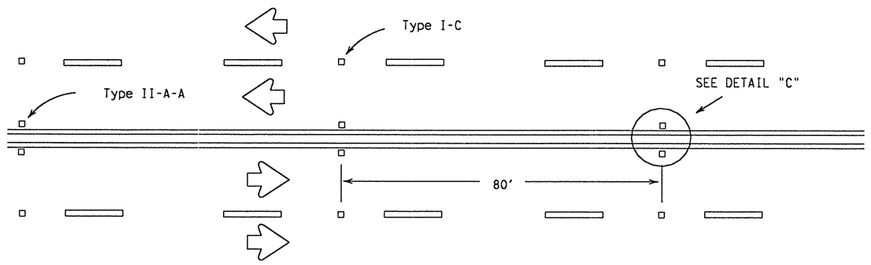

CENTERLINE & LANE LINES FOR FOUR LANE TWO-WAY HIGHWAYS

Raised pavement marker Type I-C, clear face toward normal traffic, shall be placed on 80-foot centers.

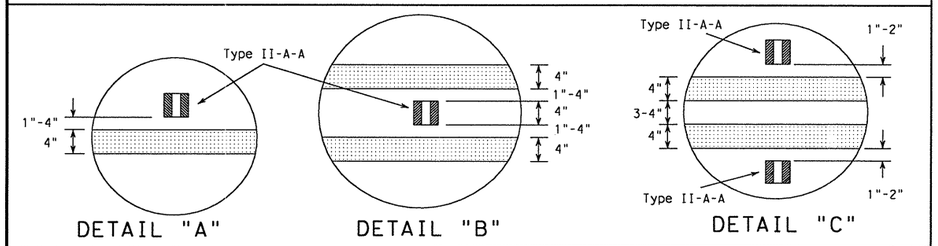

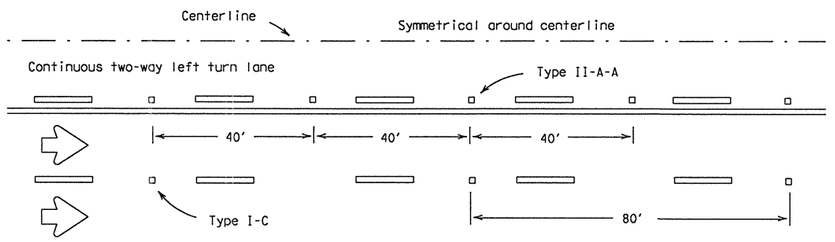

CENTERLINE AND LANE LINES FOR TWO-WAY LEFT TURN LANE

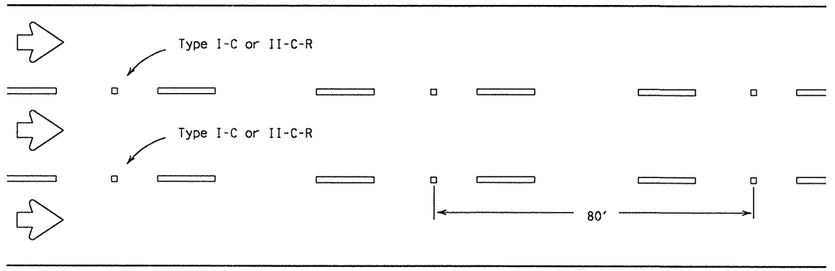

LANE LINES FOR ONE-WAY ROADWAY (NON-FREEWAY FACILITIES)

Raised pavement markers Type II-C-R shall have clear face toward normal traffic and red face toward wrong-way traffic.

As required by the Engineer or shown elsewhere in the plans, Type II-C-R or Type I-C markers may be placed on 40-foot centers for the below listed conditions:

1. horizontal curves,
2. continuously illuminated sections,
3. high volume roadways
4. or roadways where safety concerns exist.

RAISED PAVEMENT MARKERS

(REFLECTORIZED)

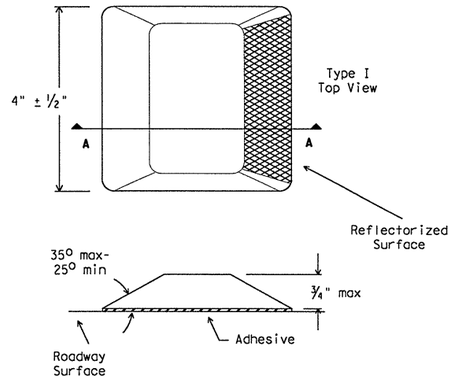

SECTION A

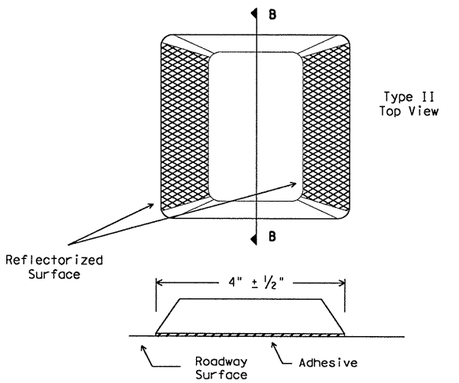

SECTION B

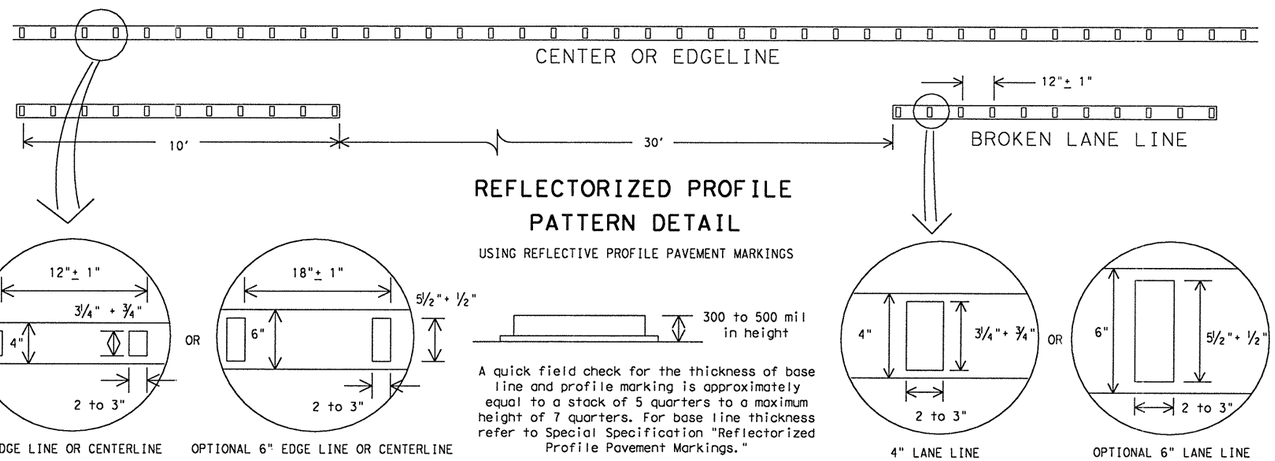

REFLECTORIZED PROFILE PATTERN DETAIL

USING REFLECTIVE PROFILE PAVEMENT MARKINGS

300 to 500 mil in height

A quick field check for the thickness of base line and profile marking is approximately equal to a stack of 5 quarters to a maximum height of 7 quarters. For base line thickness refer to Special Specification "Reflectorized Profile Pavement Markings."

GENERAL NOTES:

All raised pavement markers placed in broken lines shall be placed in line with and midway between the stripes.

On concrete pavements the raised pavement markers should be placed to one side of the longitudinal joints.

All pavement marking materials shall meet the required Departmental Material Specifications as specified by the plans.

SPECIFICATION REFERENCE TABLE

MATERIAL SPECIFICATIONS	
PAVEMENT MARKERS (REFLECT.)	DMS-4200
EPOXY	DMS-6100
BITUMINOUS ADHESIVE FOR PAVEMENT MARKERS	DMS-6130

STANDARD PLANS
Texas Department of Transportation
Traffic Operations Division

POSITION GUIDANCE USING RAISED MARKERS
REFLECTORIZED PROFILE MARKINGS
PM(2)-00A

©TxDOT April 1977

DN: BAS	CK: GRB	DW: FDN	CK: CAL

REVISIONS	STATE DISTRICT	FEDERAL REGION	FEDERAL AID PROJECT	SHEET
10-86	AUS	6	CC 337-1-29	147
4-92				
5-00	COUNTY		CONTROL SECTION JOB	HIGHWAY
8-00	WILLIAMSON		0337 01 029	SH 29

...\signing_striping\pm03.dgn 09/21/2004 10:44:02 AM

REFLECTIVE RAISED PAVEMENT MARKERS USED TO SUPPLEMENT STANDARD PAVEMENT MARKINGS

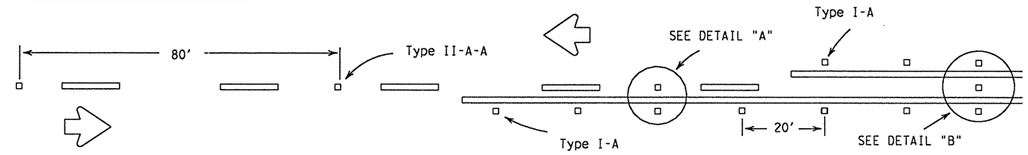

CENTERLINE & NO-PASSING LINES FOR 2 LANE TWO-WAY HWYS 24 FT. OR WIDER

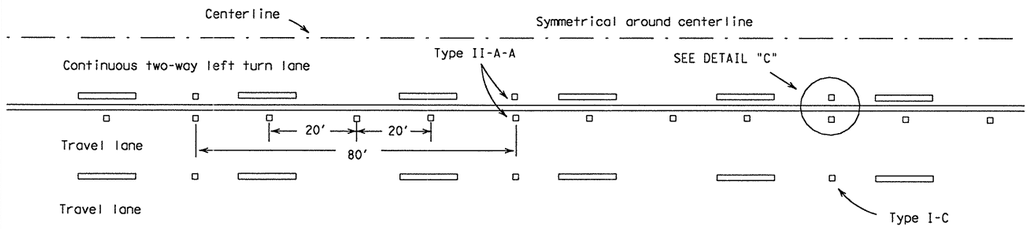

CENTERLINES & LANE LINES FOR TWO-WAY LEFT TURN LANE

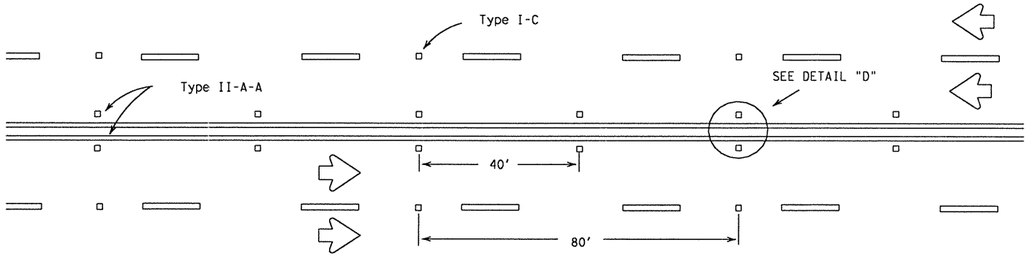

CENTERLINE & LANE LINES FOR 4 LANE TWO-WAY HIGHWAYS

Raised pavement marker Type I-C, clear face toward normal traffic, shall be placed on 80-foot centers.

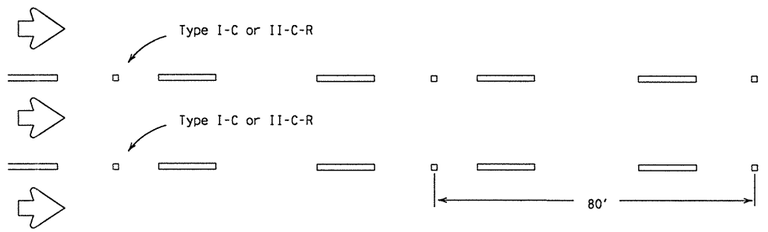

LANE LINES FOR ONE-WAY ROADWAY (NON-FREEWAY)

Raised pavement markers Type II-C-R shall have clear face toward normal traffic and red face toward wrong-way traffic.

As required by the Engineer or shown elsewhere in the plans, Type II-C-R or Type I-C markers may be placed on 40-foot centers for the below listed conditions:

1. horizontal curves,
2. continuously illuminated sections,
3. high volume roadways
4. or roadways where safety concerns exist.

DETAIL "A"

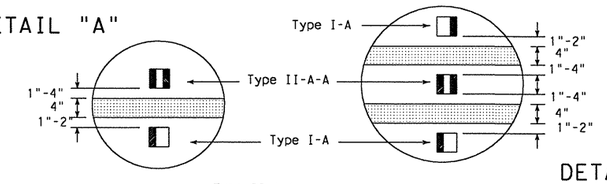

DETAIL "B"

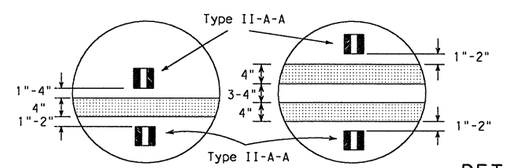

DETAIL "C"

DETAIL "D"

RAISED PAVEMENT MARKERS

(REFLECTORIZED)

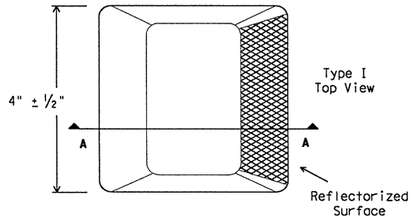

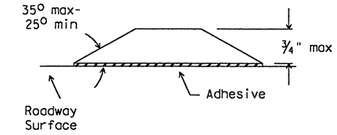

SECTION A

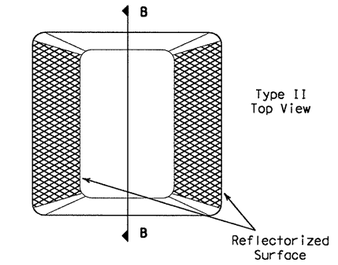

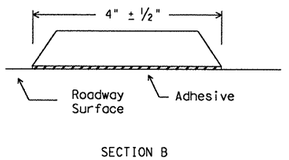

SECTION B

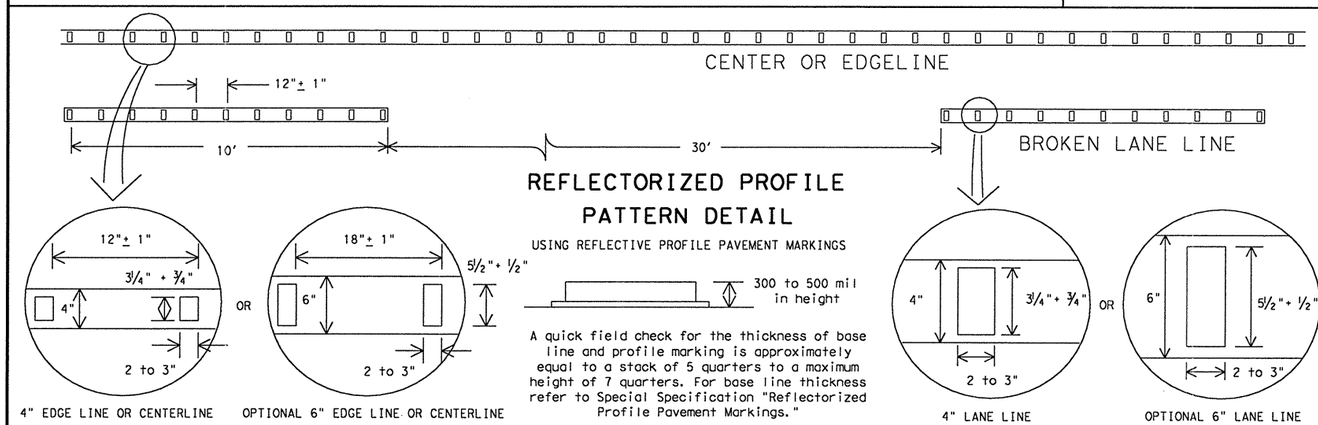

REFLECTORIZED PROFILE PATTERN DETAIL

USING REFLECTIVE PROFILE PAVEMENT MARKINGS

A quick field check for the thickness of base line and profile marking is approximately equal to a stack of 5 quarters to a maximum height of 7 quarters. For base line thickness refer to Special Specification "Reflectorized Profile Pavement Markings."

GENERAL NOTES:

All raised pavement markers placed in broken lines shall be placed in line with and midway between the stripes.

On concrete pavements the raised pavement markers should be placed to one side of the longitudinal joints.

All pavement marking materials shall meet the required Departmental Material Specifications as specified by the plans.

SPECIFICATION REFERENCE TABLE

MATERIAL SPECIFICATIONS	
PAVEMENT MARKERS (REFLECT.)	DMS-4200
EPOXY	DMS-6100
BITUMINOUS ADHESIVE FOR PAVE. MKS.	DMS-6130

STANDARD PLANS

Texas Department of Transportation

Traffic Operations Division

SUPPLEMENTAL MARKINGS USING RAISED PAVEMENT MARKERS

REFLECTORIZED PROFILE MARKINGS

PM(3)-00A

©TxDOT April 1977

DN: - BAS	CK: - GRB	DW: - FDN	CK: - CAL	MSG NO.:

REVISIONS	STATE DISTRICT	FEDERAL REGION	FEDERAL AID PROJECT	SHEET
10-86	AUS	6	CC 337-1-29	148
4-92				
5-00	COUNTY	CONTROL	SECTION	JOB	HIGHWAY
8-00	WILLIAMSON	0337	01	029	SH 29

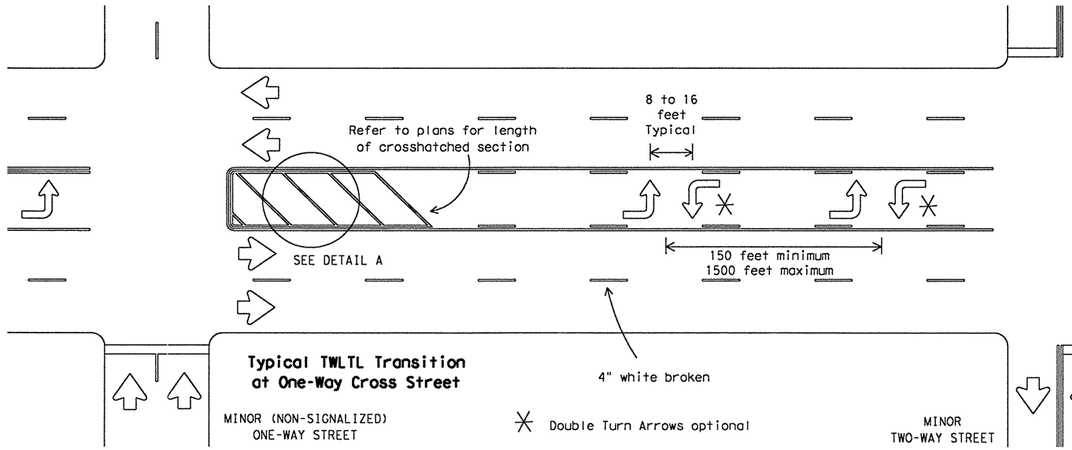

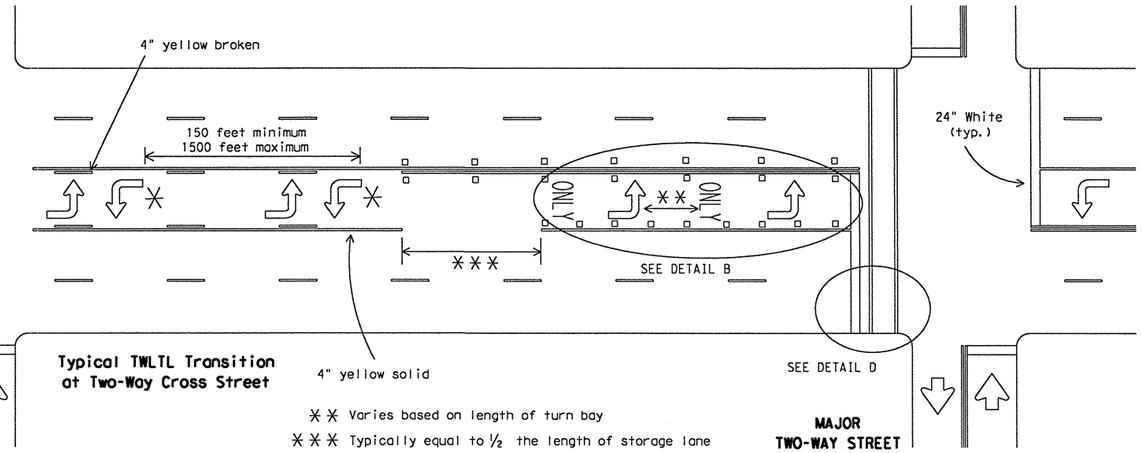

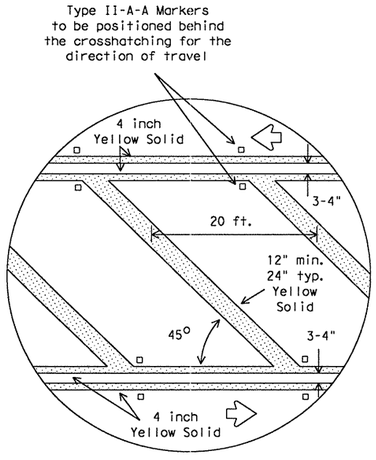

DETAIL A

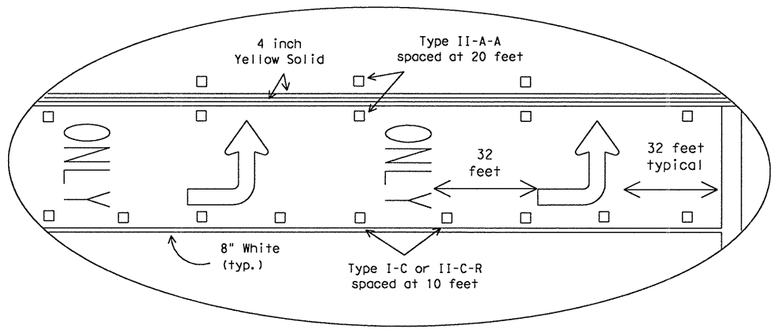

DETAIL B

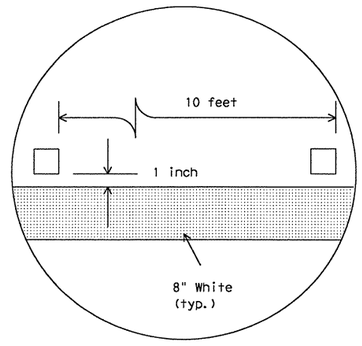

DETAIL C

Raised pavement marker Type I-C with undivided highways, flush medians and two way left turn lanes.
Raised pavement marker Type II-C-R with divided highways and raised medians.

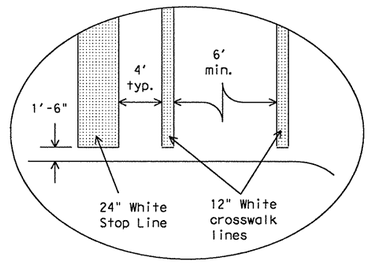

DETAIL D

Final placement of Stop Bar and Crosswalk shall be approved by the Engineer in the field.

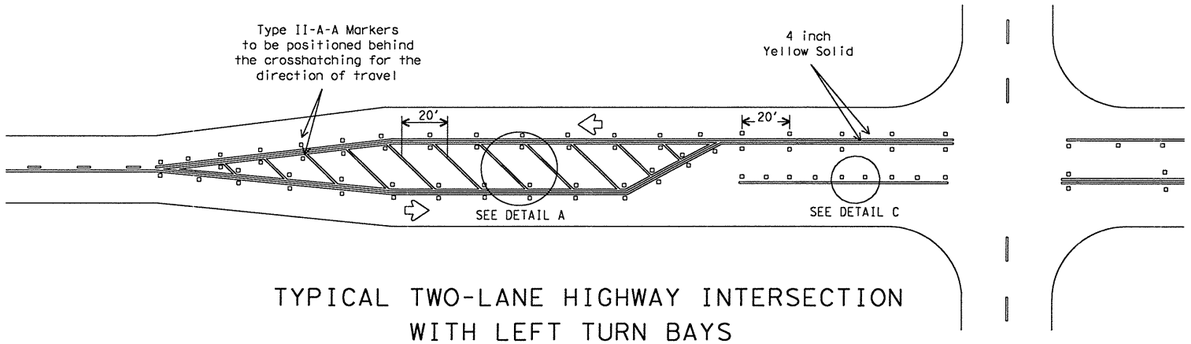

TYPICAL TWO-LANE HIGHWAY INTERSECTION WITH LEFT TURN BAYS

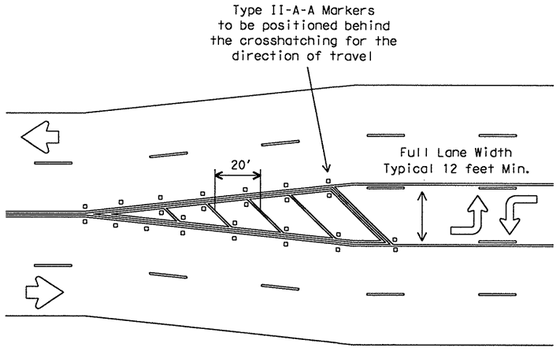

TYPICAL TRANSITION FOR TWLTL AND DIVIDED HIGHWAY

GENERAL NOTES

Refer elsewhere in plans for additional RPM placement and details.

Details for words and arrows as shown on other sheets.

All pavement marking materials shall meet the required Departmental Material Specifications as specified by the plans.

For a left turn bay, two sets of words and arrows shall be used if the length of the bay is equal to or greater than 180 feet. The bottom of the first ONLY shall be placed at the beginning of the turn bay lane line as shown above.

Other crosswalk paterns as shown in the "Texas Manual on Uniform Traffic Control Devices" may be used.

SPECIFICATION REFERENCE TABLE

MATERIAL SPECIFICATIONS	
PAVEMENT MARKERS (REFLECT.)	DMS-4200
EPOXY	DMS-6100
BITUMINOUS ADHESIVE FOR PAVE. MKS.	DMS-6130

STANDARD PLANS
Texas Department of Transportation
Traffic Operations Division

PAVEMENT MARKINGS FOR TWO-WAY LEFT TURN LANES DIVIDED HIGHWAYS AND RURAL LEFT TURN BAYS

PM(4)-03

©TxDOT April 1998

DN: BAS	CK: GRB	DW: FDN	CK: CAL	NCG NO.:

REVISIONS	STATE DISTRICT	FEDERAL REGION	FEDERAL AID PROJECT	SHEET
5-00	AUS	6	CC 337-1-29	149
8-00				
3-03	COUNTY		CONTROL	SECTION	JOB	HIGHWAY
	WILLIAMSON		0337	01	029	SH 29

...\signing_striping\pm03.dgn 09/21/2004 10:44:02 AM

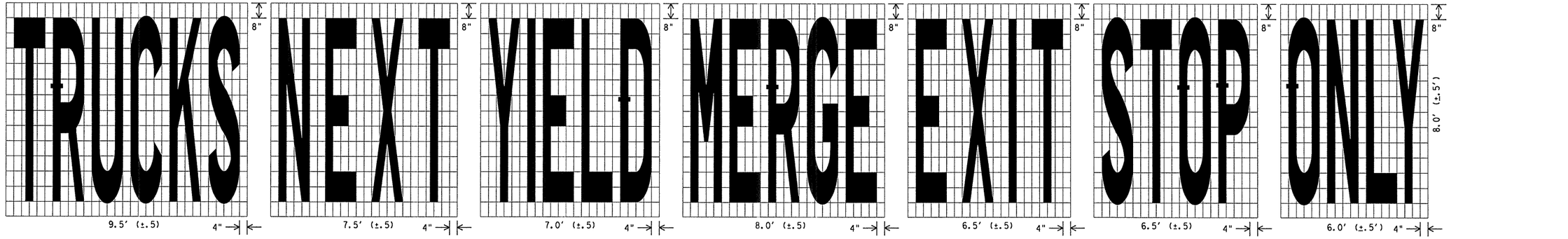

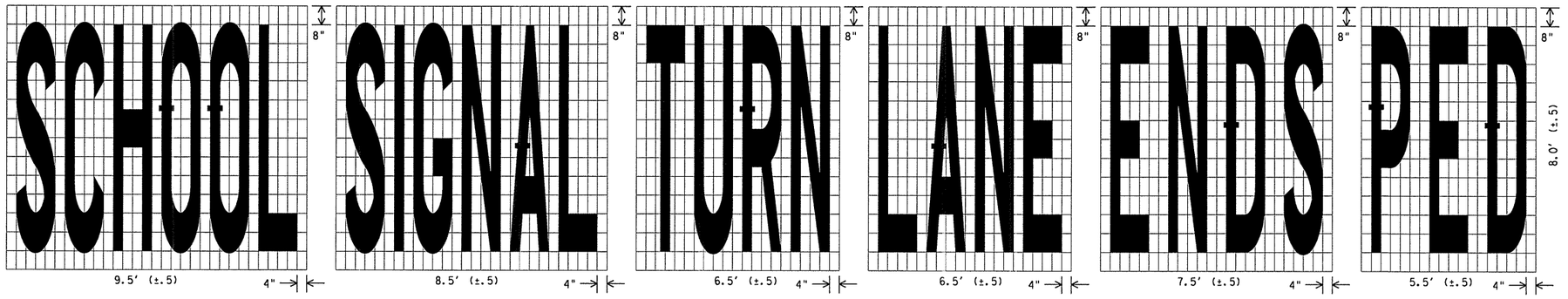

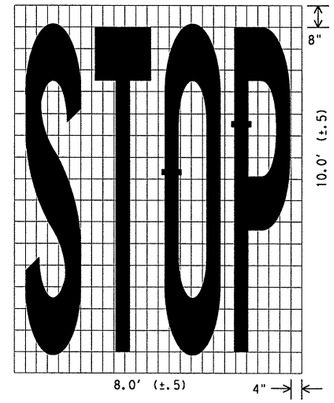

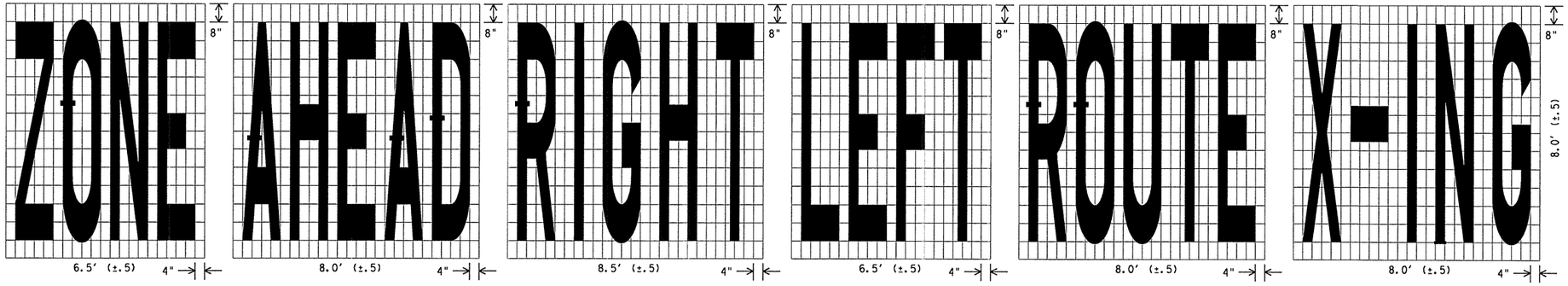

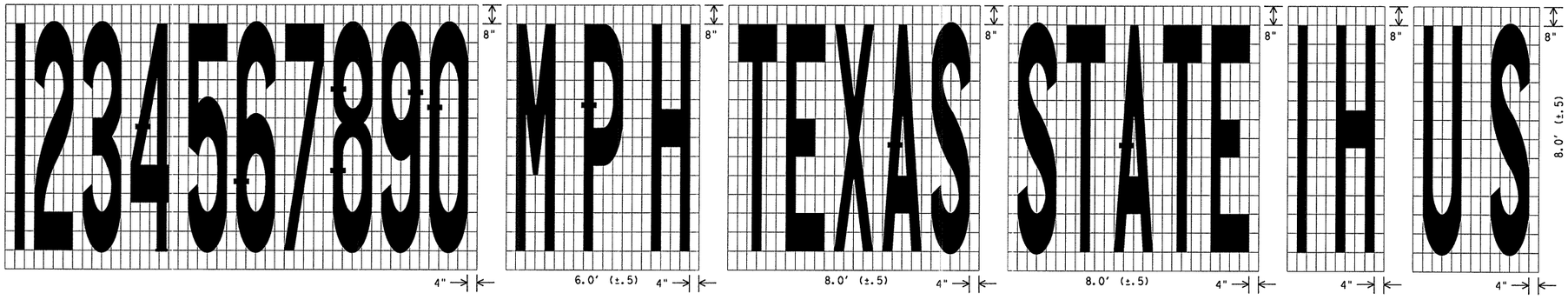

STANDARD PLANS
Texas Department of Transportation
Traffic Operations Division

STANDARD PAVEMENT MARKINGS (WORDS)

PM(5)-01

© TxDOT March 2001	DN: -	CK: - GRB	DW: - FDN	CK: - CAL
REVISIONS	STATE DISTRICT	FEDERAL REGION	FEDERAL AID PROJECT	SHEET
	AUS	6	CC 337-1-29	130

COUNTY	CONTROL	SECTION	JOB	HIGHWAY
WILLIAMSON	0337	01	029	SH 29

...\signing_striping\pm.dgn 09/21/2004 10:44:02 AM

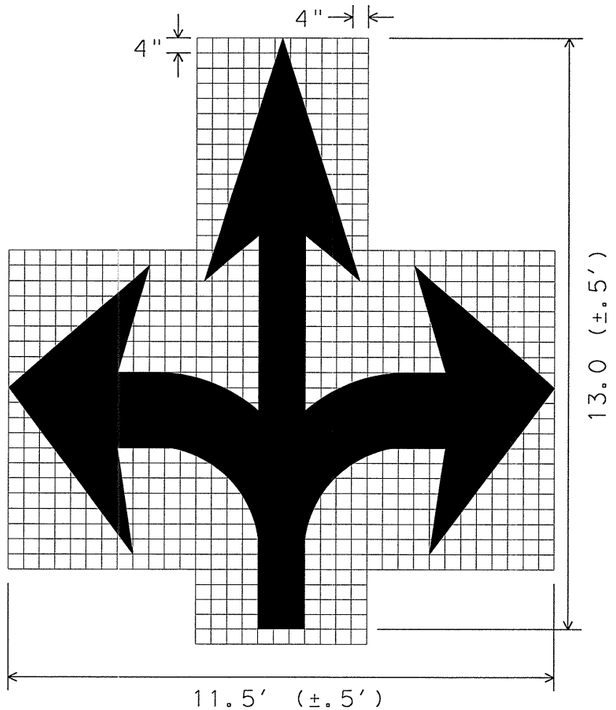

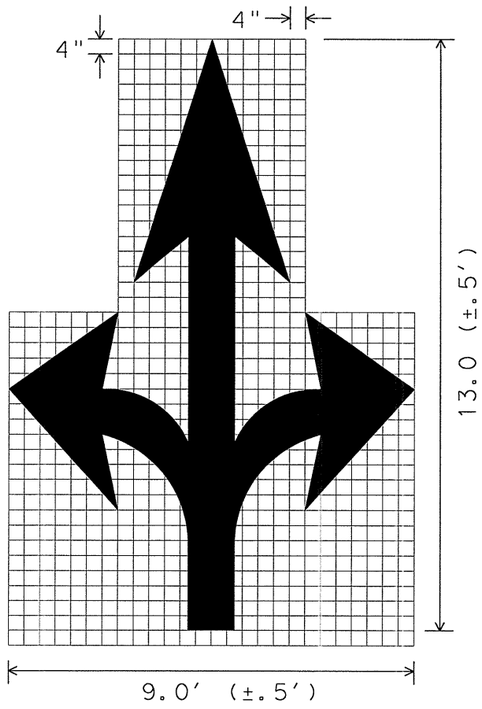

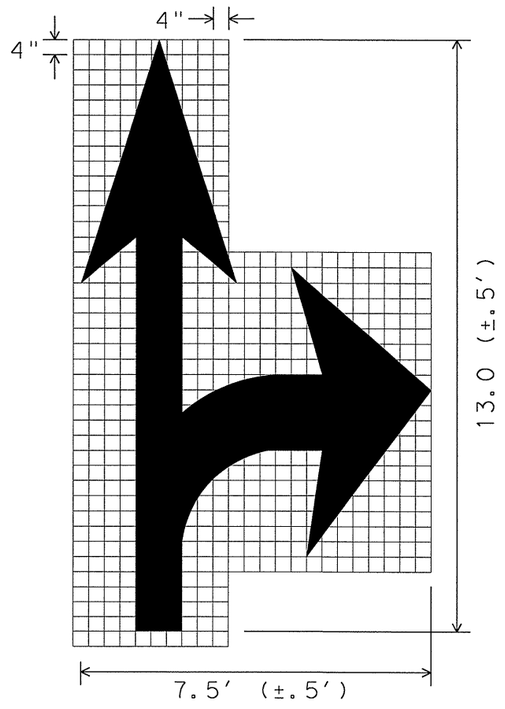

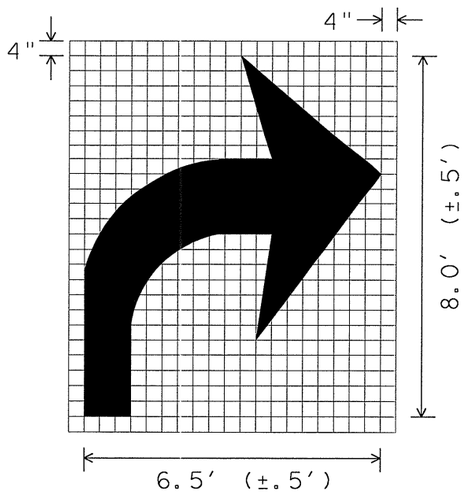

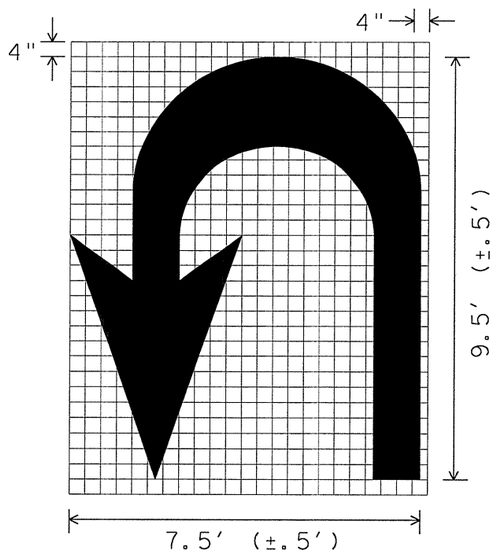

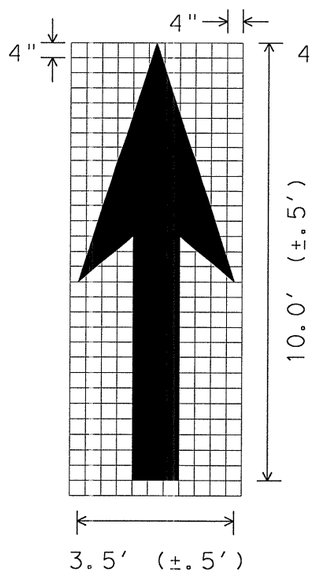

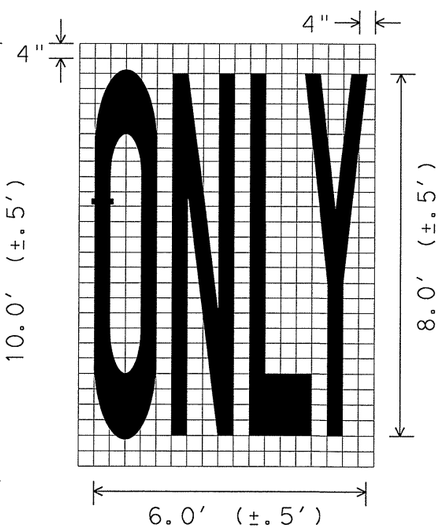

GENERAL NOTES;

1. Minimum 8 foot white markings should be used, unless otherwise noted. If message consists of more than one word, it should be placed with first word nearest the driver.
2. These details are standard size for normal installation; sizes may be reduced approximately one-third for low speed urban conditions; larger sizes may be needed for freeways, above average speed conditions or other critical locations.
3. The longitudinal space between markings should be at least four times the height of the markings, on low speed roads, but should not exceed ten times the height under any condition.
4. Markings considered appropriate for use when warranted include the following:
   A. Regulatory
      STOP
      RIGHT (LEFT) TURN ONLY
      25 MPH
      SYMBOL ARROWS
   B. Warning
      STOP AHEAD
      SIGNAL AHEAD
      SCHOOL
      SCHOOL X-ING
      PED X-ING
      R X R (see RCPM standard)
   C. Guide
      US XXX
      ROUTE XXX
      STATE XXX
      Other words or symbols may be necessary under certain conditions
5. Uncontrolled use of pavement markings can result in driver confusion. Word and symbol markings should be no more than three lines.
6. The word "STOP" shall not be used on the pavement unless accompanied by a Stop line and Stop sign. The word "STOP" shall not be placed on the pavement in advance to a stop line, unless every vehicle is required to stop at all times.
7. Pavement markings should generally be no more than one lane in width, with School messages being the exception. For details of School and School crossing pavement markings, refer to Part VII of the "Texas Manual on Uniform Traffic Control Devices".
8. Spacing between letters should be approximately 4 inches. The width of letters may vary depending on the width of the travel lanes.
9. Lane-Use arrow markings may be used to convey either guidance or mandatory messages. Arrows used to convey a mandatory movement must be accompanied by standard signs and the pavement marking word "ONLY".
10. Pavement markings are to be located as specified elsewhere in the plans.

SPACING BETWEEN LINES OF PAVEMENT MARKINGS	
MPH	SPACING
≤ 45	MINIMUM 4 TIMES THE LETTER HEIGHT
> 45	MINIMUM - 4 TIMES THE LETTER HEIGHT MAXIMUM - 10 TIMES THE LETTER HEIGHT

STANDARD PLANS
Texas Department of Transportation
Traffic Operations Division

STANDARD PAVEMENT MARKINGS (ARROWS)

PM(6)-01

©TxDOT March 2001

DN: -	CK: - GRB	DW: - FDN	CK: - CAL

REVISIONS	STATE DISTRICT	FEDERAL REGION	FEDERAL AID PROJECT	SHEET
	AUS	6	CC 337-1-29	151

COUNTY	CONTROL	SECTION	JOB	HIGHWAY
WILLIAMSON	0337	01	029	SH 29

OBJECT MARKER TYPES 1 and 4

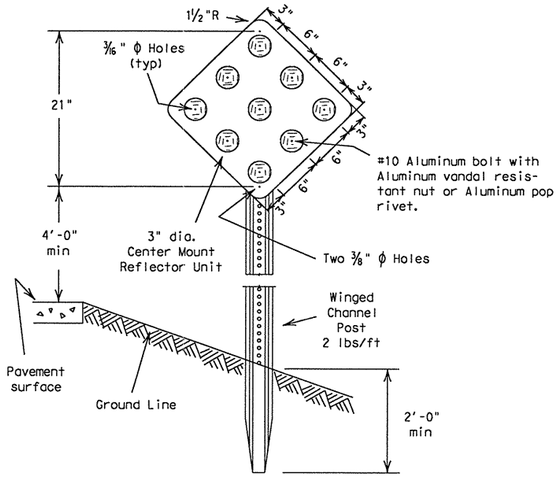

TYPE 1 and 4 Object Markers shall consist of Type (B) Center Mount Reflector Units mounted on 0.080" thick sheet aluminum conforming with ASTM B-209 Alloy 6061-T6.

TYPE 1 OM-1R

18" x 18"
Reflector Unit - YELLOW
Background - (YELLOW - Non-Reflective)

TYPE 4 OM-4R

18" x 18"
Reflector Unit - RED
Background - (RED - Non-Reflective)

OBJECT MARKER TYPE 3

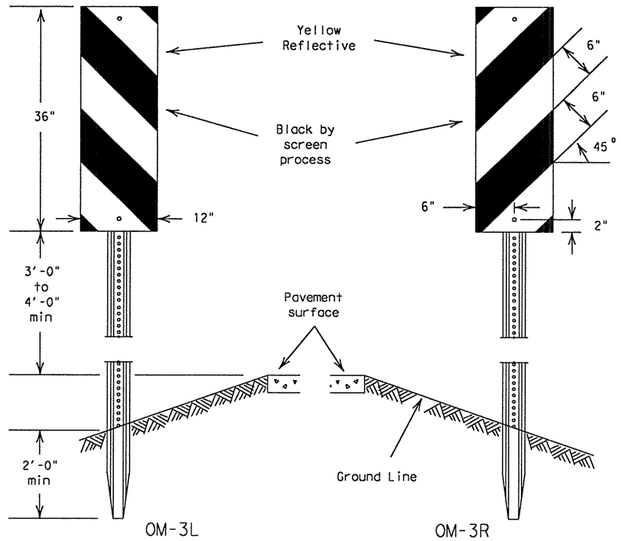

Sign blank to be .080" thick sheet aluminum conforming to ASTM B-209 Alloy 6061-T6.

Reflective sheeting shall be in accordance with Departmental Material Specification, D-9-8300, Type C.

TYPICAL REFLECTOR UNITS

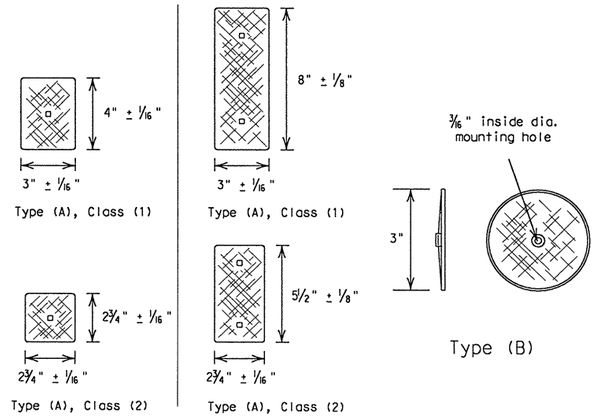

Type (A) - Reflective sheeting with pressure sensitive backing. For certain (non-flexible post) applications, reflective sheeting may be directly applied to approved metal, plastic or fiberglass backplate with 17/64" square mounting hole.

It is the contractor's option to provide Class (1) or Class (2) reflective sheeting in accordance with Departmental Material Specification D-9-8600. All reflector units per delineator or object marker shall be of the same type and class of reflective sheeting.

Type (B) - Centermount acrylic plastic prismatic reflector.

SPECIFICATION REFERENCE TABLE

MATERIALS AND TESTS DIVISION SPECIFICATIONS	
FLEXIBLE DELINEATOR & OBJECT MARKER POSTS (DRIVEABLE & SURFACE MOUNT TYPES)	D-9-4400
FLAT SURFACE REFLECTIVE SHEETING, TYPE C (HIGH SPECIFIC INTENSITY)	D-9-8300
NON-REFLECTIVE BACKGROUND COATING	D-9-8500
DELINEATOR AND OBJECT MARKER	D-9-8600

GENERAL NOTES:

1) Delineators shall be uniformly placed not less than 2 feet nor more than 8 feet from the edge of shoulder or the face of unmountable curb. They may be placed in line with guardrail where guardrail is used.
2) Object markers shall be located at points designated on the plan.
   When used for marking objects in the roadway or 8 feet or less from the shoulder or curb, the mounting height to the bottom of the object marker should normally be 4 feet above the surface of the nearest traffic lane. When used to mark objects more than 8 feet from the shoulder or curb, the mounting height to the bottom of the object marker may be 4 feet above the ground line.
   When object markers or markings are applied to a hazardous object which by its nature required a lower or higher mounting, the vertical mounting height may vary according to need.
3) Hardware shall be galvanized steel, stainless steel, or aluminum, except as noted.
4) Posts for supporting delineators and Type 2 object markers shall be 1.12 lbs/ft winged channel.
5) Type 1, 3 and 4 object marker posts shall be 2 lbs/ft winged channel.
6) Delineator and object markers shall be in accordance with Department Material Specification D-9-8600.

OBJECT MARKERS TYPE 2

YELLOW (R-reflector unit, P-panel)

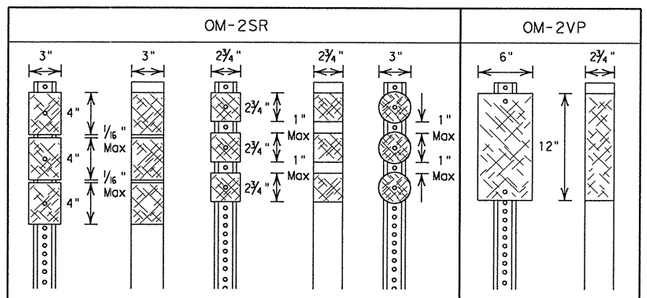

Type	A				B	A	
Class	1	1	2	2	n/a	1	2
Post	WC	FLEX	WC	FLEX	WC	WC	FLEX

ALL REFLECTOR UNITS ARE YELLOW
WC-wing channel post (1.12 lbs/ft)
FLEX-flexible post (driveable and semi-driveable)

DELINEATORS

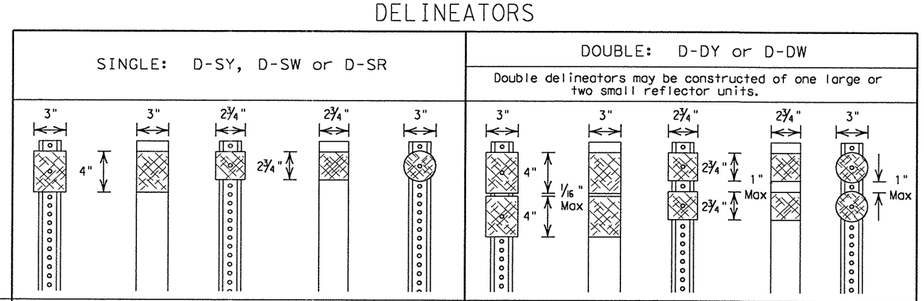

Type	A				B	A				B
Class	1	1	2	2	n/a	1	1	2	2	n/a
Post	WC	FLEX	WC	FLEX	WC	WC	FLEX	WC	FLEX	WC

Length of post may vary to meet field conditions.

REFLECTOR UNITS: W-white, Y-yellow, R-red
WC-wing channel post (1.12 lbs/ft)
FLEX-flexible post (driveable and semi-driveable)

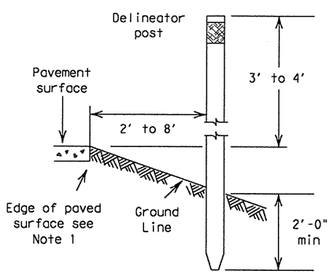

TYPICAL INSTALLATION

STANDARD PLANS
TEXAS DEPARTMENT OF TRANSPORTATION
Traffic Operations Division

DELINEATORS & OBJECT MARKERS

(1 of 2) D & OM(1)-95

© TxDOT January 1981

DN: - LR	CK: -	DW: - DN	CK: -	NEG NO.:

REVISIONS
1-82
4-92
8-95

STATE DISTRICT	FEDERAL REGION	FEDERAL AID PROJECT	SHEET
AUS	6	CC 337-1-29	152

COUNTY	CONTROL	SECTION	JOB	HIGHWAY
WILLIAMSON	0337	01	029	SH 29

PLAN VIEW OF BIDIRECTIONAL MOUNTING

For Single Delineators Only

Post oriented as directed by Engineer

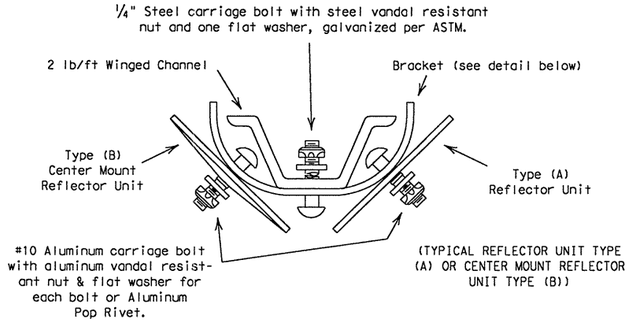

BIDIRECTIONAL BRACKET

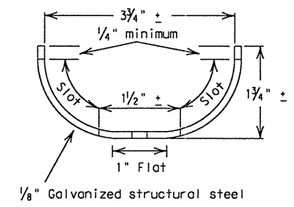

PLAN VIEW

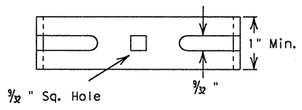

ELEVATION

Strap Length = 6" Min.

DELINEATORS FOR CURVES OR TANGENT SECTIONS

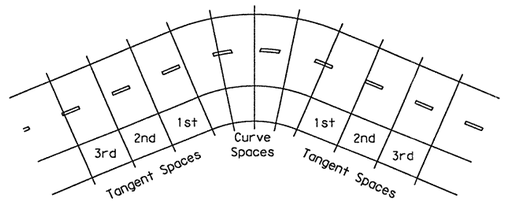

The delineator spacing, S, on the curve is found from the formula $S=3\sqrt{R-50}$, where R is the radius of the curve in feet. The first spaces immediately in advance of and beyond the curve are 2.0xS, the second spaces are 3.0xS, and the third spaces are 6.0xS but not to exceed 300 feet. Distance for spaces rounded to nearest 5 feet.

Spacing for Highway Delineators on Horizontal Curve

Degree of Curve	Radius on Curve	Spacing on Curve	Spacing in Advance of and Beyond Curves		
			First Space	Second Space	Third Space
	Feet	Feet	Feet	Feet	Feet
1	5730	225	300	300	300
2	2865	160			
3	1910	130	260		
4	1433	110	225		
5	1146	100	200		
6	955	90	185	275	
7	819	85	165	250	
8	716	75	155	230	
9	637	75	145	220	
10	573	70	135	205	
11	521	65	130	195	
12	478	60	125	185	

FLEXIBLE POSTS

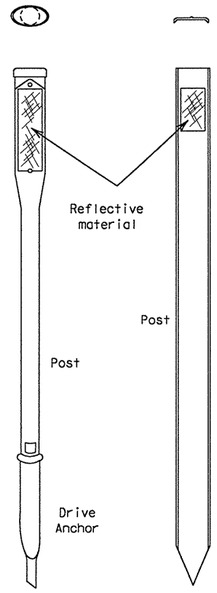

Driveable or Semi-Driveable Delineator Posts

Install to manufacturer's recommendations

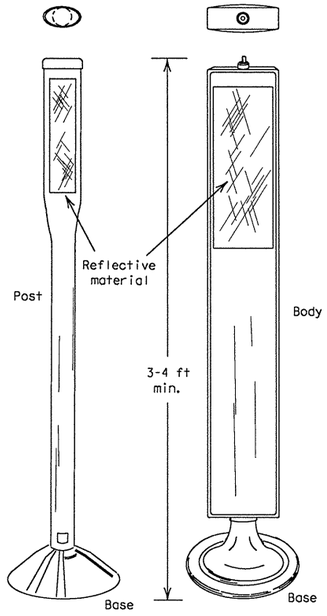

Pavement Surface Mount

Surface mounted delineator posts may use epoxy, or hot bituminous adhesive to mount post to flat surface.

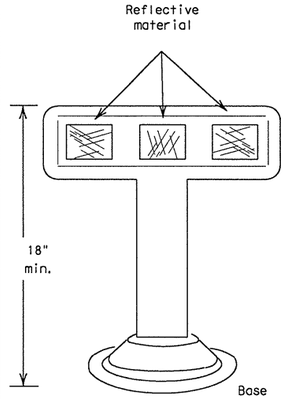

K Marker

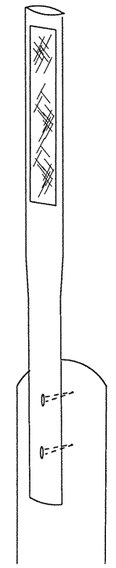

Guardrail Post Surface Mount

PLAN VIEW OF MONODIRECTIONAL MOUNTINGS

For Single and Double Delineators and Object Marker types OM-2YP(a) & OM-2SR

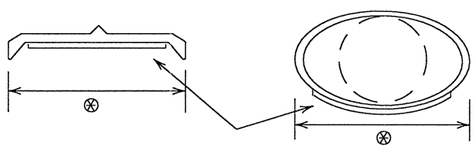

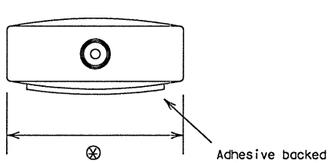

⊛ Not less than 3 1/4".

Various Cross Sections may be furnished if projected width of reflective unit appears to be 3" ± 3/8".

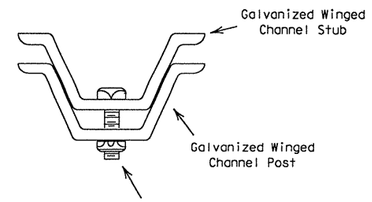

PLAN VIEW

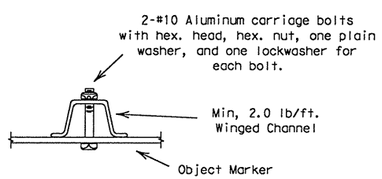

Length of post may vary to meet field conditions.

PLAN VIEW

BREAK AWAY CHANNEL POST

For Object Marker Types 1,3 and 4

(where specified in the plans)

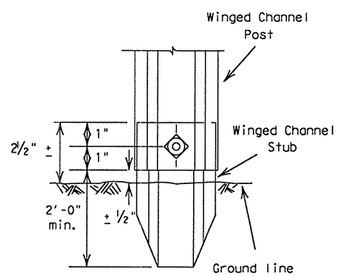

PARTIAL ELEVATION

STANDARD PLANS
TEXAS DEPARTMENT OF TRANSPORTATION
Traffic Operations Division

DELINEATORS & OBJECT MARKERS

(2 of 2) D & OM(2)-95

© TxDOT January 1981

DN: - LR	CK: -	DW: - DN	CK: -	REQ NO.:

REVISIONS	STATE DISTRICT	FEDERAL REGION	FEDERAL AID PROJECT	SHEET
2-82	AUS	6	CC 337-1-29	153
4-92	COUNTY		CONTROL	SECTION	JOB	HIGHWAY
8-95	WILLIAMSON		0337	01	029	SH 29

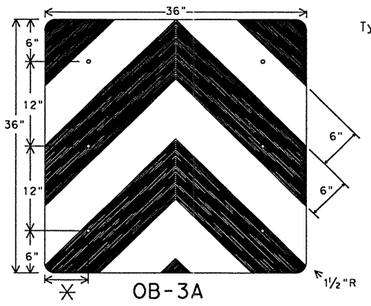

OB-3A

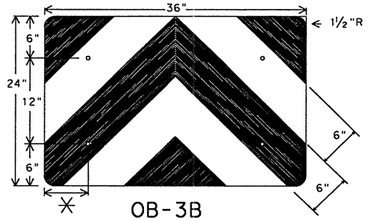

OB-3B

✳ adjust to fit attenuator per manufacturer's recommendation, or as directed by the Engineer.

Type C reflector

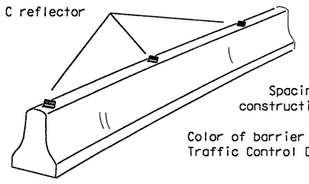

Barrier Reflectors will be installed only on barriers designated for reflectorization as required elsewhere in the plans.

Spacing of reflectors is 40 feet. Mount reflectors to barrier by construction adhesive or butyl rubber adhesive.

Color of barrier reflectors will conform to the Texas "Manual on Uniform Traffic Control Devices", (TMUTCD).

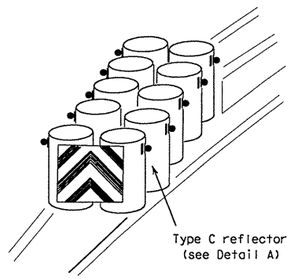

Type C reflector (see Detail A)

Object Marker blank to be ⅝" Plywood (Type A) in accordance with Item "PLYWOOD SIGNS (TYPE A)" or 0.08" Aluminum as per Specification D-9-7110.

Mounting should be flush with top of VIA. Minimum size 36" x 24".

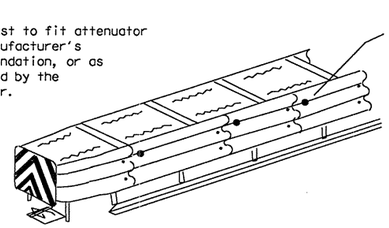

Type C reflector installed per manufacturer's recommendation (see Detail B)

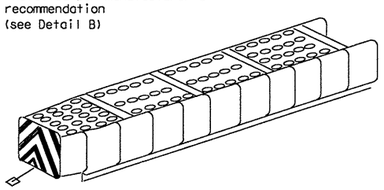

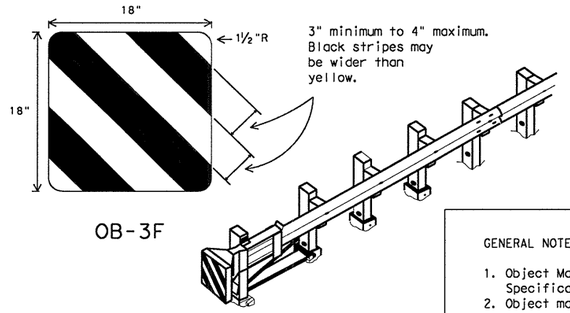

OB-3F

3" minimum to 4" maximum. Black stripes may be wider than yellow.

TYPICAL GUARDRAIL END TREATMENT

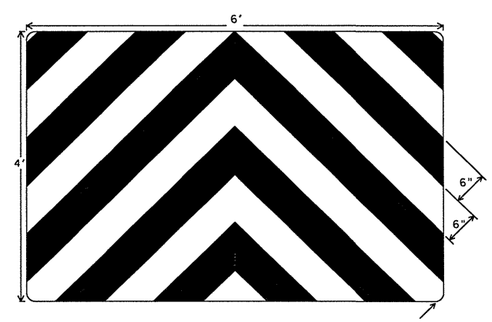

OB-3E

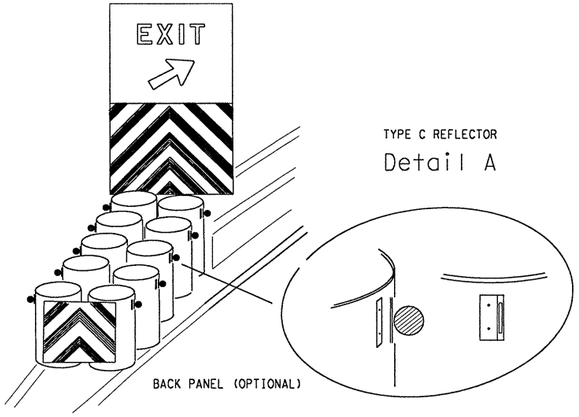

TYPE C REFLECTOR
Detail A

GENERAL NOTES:

1. Back Panel (OB-3E) shall be made of 5/8" plywood (Type A) panels unless otherwise noted in the plans.
2. Back panel will be mounted independent of the attenuator. The minimum mounting height is flush with the top of the attenuator.
3. Alternating flashing yellow lights may be added. Lights should be mounted minimum 72" above pavement.
4. Attenuator may have additional yellow reflective and black striping, and/or reflectors placed on sides. CHEVRONS (W1-8) may be erected to delineate roadway curvature beyond the attenuator. These additional devices will be installed if required elsewhere in the plans.
5. Mount Back Panel per details on SMD Standards, or as detailed elsewhere in the plans.

GENERAL NOTES: OBJECT MARKERS

1. Object Markers shall conform to the Texas MUTCD and meet the color and reflectivity requirement of Department Material Specification D-9-8300, Type C. Background shall be yellow reflective and Chevron shall be black.
2. Object markers OB-3C, OB-3D and OB-3F may be fabricated from reflective sheeting applied to:
   (a) galvanized sheet metal gauge 24 to 28 per ASTM A366.025 nominal, aluminum sheet of 6061-T6 or 5052-H38 alloy approximately .065 inch thickness,
   (b) low or medium density polyethylene approximately 0.08 inch thickness, or
   (c) other material as specified in the plans or approved by the Engineer.
3. OB-3F is intended for use only with guardrail end treatments (i.e. GET, CAT, BEST, BRAKEMASTER, SENTRE, etc.). OM-BF may be fabricated from adhesive backed reflective sheeting applied directly to guardrail end treatment, or applied directly to an "end cap" as per the manufacturer's recommendation. Direct applied sheeting shall provide a smooth surface and have no wrinkles, air bubbles, cuts or tears.
4. Size may be reduced to fit smaller devices, however, the minimum size shall be:
   (a) 24 x 24 inches for attenuators, and
   (b) 18 x 18 inches for guardrail end treatments.
5. Pop rivets, screws, or nuts and bolts may be used to attach object markers and reflectors. Holes, slots or other openings may be cut or drilled through object markers to allow cable or other attachments.
6. When traffic passes only on one side of attenuator, only the OM-3 marker should be installed. OM-3 should be installed per the requirements of D & OM Standards with a minimum mounting height of 18 inches.

TYPE C REFLECTORS

1. Type C reflectors shall consist of a reflector unit attached to a bracket to facilitate delineator mounting on attenuators, guardrails and concrete traffic barriers.
2. Type C reflectors may also be used to delineate side of attenuator, guardrail and concrete traffic barrier.
3. Type C reflectors shall meet the requirements of D-9-8600.

TRAFFIC FLOW	BOTH SIDES						ONE SIDE
ATTENUATOR TYPE	OB-3A	OB-3B	OB-3C	OB-3D	L	OM-1	
GREAT	NR	✓	NR	✓	96"	✓	
Steel Drum	✓	✓	✓	✓	114"	✓	
Hydraulic	✓	✓	NR	NR	NR	✓	
Hex Foam	✓	✓	NR	NR	NR	✓	OM-3
Low Maintenance	NR	✓	NR	✓	96"	✓	
Sand Filled Plastic Modules	NR	NR	NR	NR	NR	✓	
Sand Tire	NR	NR	NR	NR	NR	✓	

NR - Not Recommended

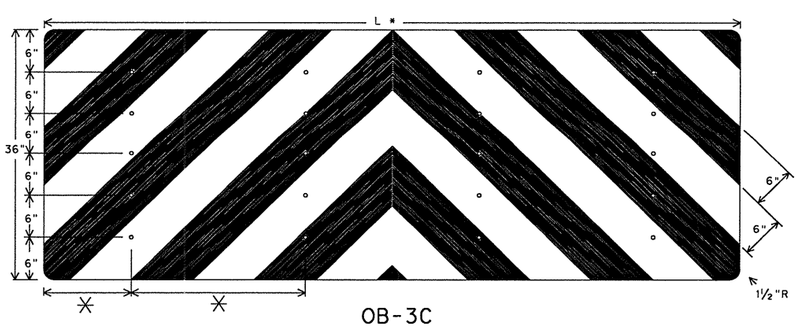

OB-3C

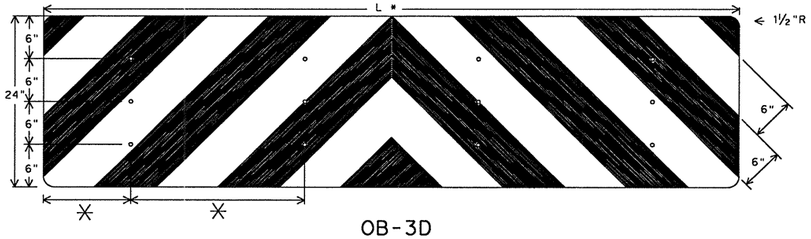

OB-3D

✳ spacing adjusted to attach through centerline of drum, per attenuator manufacturers recommendation, or as directed by the Engineer.

Mounting should be flush with top of attenuator. Minimum size 96" x 24".

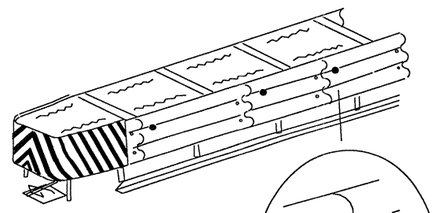

TYPE C REFLECTOR
Detail B

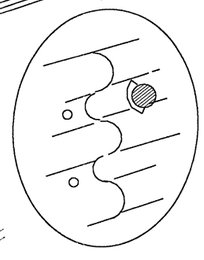

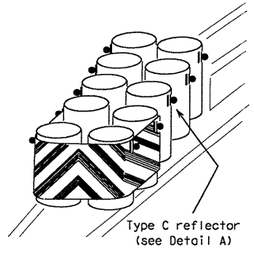

STANDARD PLANS
TEXAS DEPARTMENT OF TRANSPORTATION
Traffic Operations Division

DELINEATORS & OBJECT MARKERS FOR VEHICLE IMPACT ATTENUATORS

D & OM(VIA)-98

©TxDOT December 1989	DN: - LR	CK: -	DW: - DN	CK: -	QC/QA:

REVISIONS	STATE DISTRICT	FEDERAL REGION	FEDERAL AID PROJECT	SHEET
4-90	AUS	6	CC 337-1-29	154
4-92				
8-95	COUNTY		CONTROL SECTION JOB	HIGHWAY
4-98	WILLIAMSON		0337 01 029	SH 29

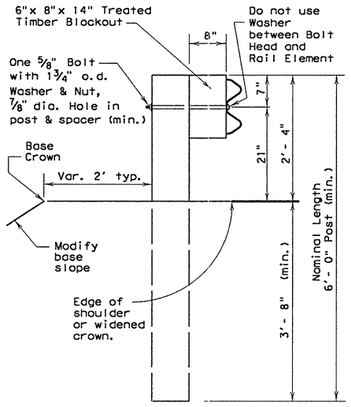

TYPICAL POST

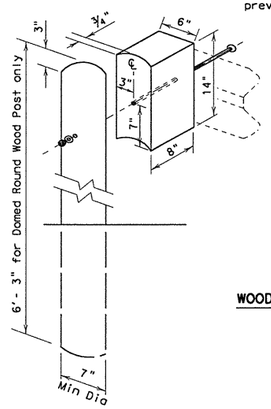

WOOD BLOCKOUT TO ROUND WOOD POST DETAIL

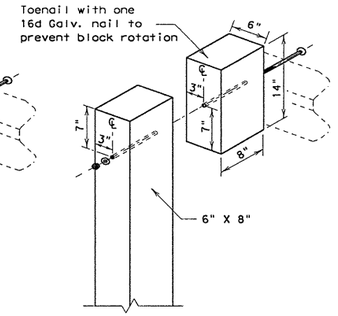

WOOD BLOCKOUT TO RECTANGULAR WOOD POST DETAIL

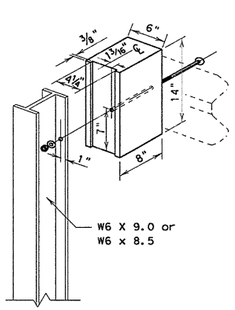

WOOD BLOCKOUT TO STEEL POST DETAIL

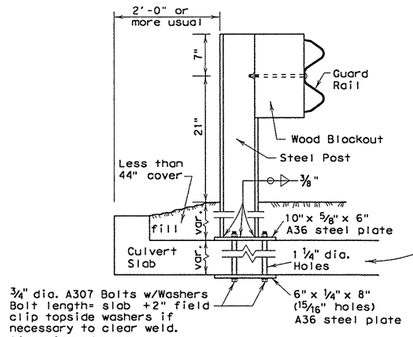

LOW FILL CULVERT POST MOUNTING OPTION

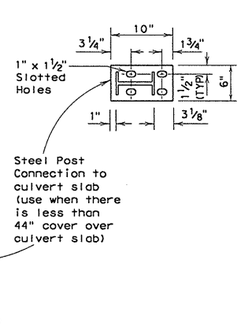

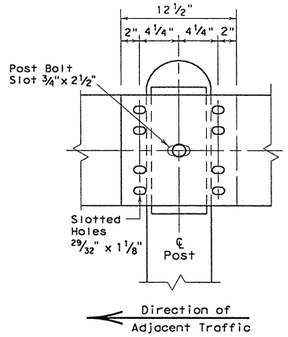

RAIL SPLICE

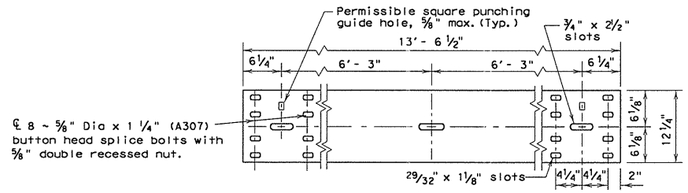

ELEVATION OF NOMINAL 12 1/2 FOOT GUARDRAIL

(25 foot sections may also be supplied)

GENERAL NOTES

1. The exact position of guard fence shall be as shown elsewhere on the plans or as directed by the Engineer. Guard fence shall be transitioned to a smooth connection with other guard fence or structure railing as shown elsewhere on plans.
2. Rail element shall meet all requirements of AASHTO M-180 except as modified on the plans. The terminal connectors shall be of the same material, but shall not be less than 10 gauge. Contractor shall verify that the locations of bolt holes match those in the Terminal Connector prior to ordering of materials.
3. Unless otherwise shown in the plans, guard fence placed in the vicinity of curbs shall be blocked out so that the face of curb is located directly below or behind the face of the blockout. Rail placed over curbs shall be installed so that the post bolt is located approximately 21-inches above the gutter pan or roadway surface.
4. Unless otherwise shown in the plans, MBGF shall be placed with the face of rail directly above the shoulder edge (or curbface) except for upstream end treatments.
5. At the option of the Contractor, the rail elements for the guard fence may be furnished in either 12 1/2 or 25 foot nominal lengths with post bolt slots for connection to posts.
6. The terminal anchor post shall be set in Class "A" concrete in (unless otherwise shown on plans) in accordance with Item, "Portland Cement Concrete". Concrete shall be subsidiary to the bid item requiring construction of the terminal rail section and anchorage system.
7. An anchor other than to a terminal anchor post shall consist of a connection similar to the rail splice or similar to the terminal connector.
8. Galvanized washers used with the eight 5/8" splice bolts and nuts that are provided for terminal connectors and/or terminal anchor posts shall be 1 3/4" x 3" x 3/16", or 1" i.d. and 2" o.d. x 0.134" (ANSI B27.2) narrow Type A plain washers.
9. Special fabrication will be required at installations having a curvature of less than 150' radius.
10. Button head post bolts (A307) shall be of sufficient length to extend through the full thickness of the nut and no more than 3/4" beyond it. Button head splice bolts (A307) are 5/8" x 1 1/4" with a 5/8" double recessed nut. Fittings (bolts, nuts, and washers) shall be in accordance with Item, Metal for Structures". Fittings shall be subsidiary.
11. Crown will be widened to accommodate guard fence.
12. If guardrail is placed on a side slope away from the pavement edge, then the slope rate between the edge of the pavement and the face of the barrier will be 1V:10H or flatter.
13. Posts shall not be set full depth in concrete.
14. Where solid rock is encountered or where shown on the plans, the diameter of the holes shall be approximately 12 inches, the backfilling shall be with a cohesionless material, and embedment depth shall be 1'-6" or more as directed by the Engineer.
15. Unless otherwise directed by the Engineer, a composite material post and/or blockout from the Department approved list of suppliers may be substituted for a post and/or blockout of similar dimensions. The list of approved suppliers of posts and blockouts will be maintained by the Construction Division, TxDOT.

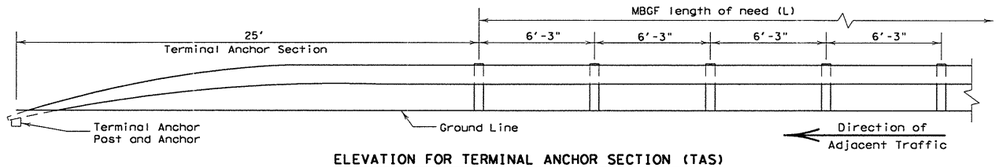

ELEVATION FOR TERMINAL ANCHOR SECTION (TAS)

(Terminal anchor sections are only for downstream guardrail end anchorage usage outside the horizontal clearance area of opposing traffic)

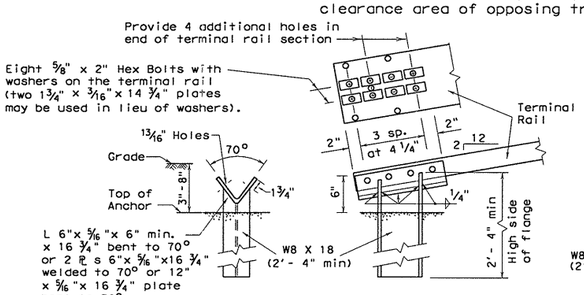

Note: This post requires four additional holes (shop or field) in the terminal rail member with eight 5/8" bolts and washer plates as shown for attachment.

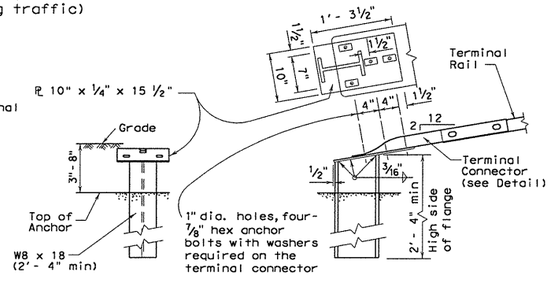

Note: This optional post requires the use of the 10 ga. terminal connector with four 7/8" hex bolts for attachment to the anchor post.

TERMINAL ANCHOR POST OPTIONS

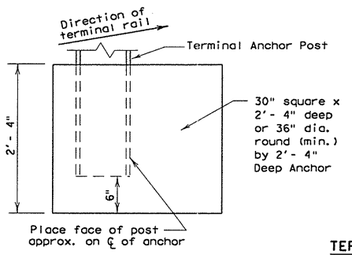

Notes:
Either post may be used with either anchor.

No construction joint is allowed in the concrete anchor.

Terminal rail may be bolted to post and in twist position prior to placing concrete anchor.

If concrete anchor is precast, the area should be compacted as directed by the Engineer, when placed in the field.

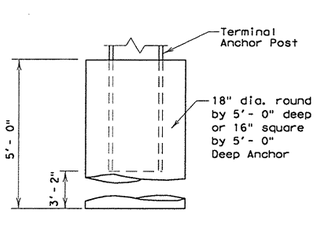

TERMINAL CONCRETE ANCHOR OPTIONS

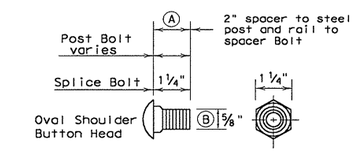

SPLICE BOLT

(A) 1 1/4" spacer to steel post hex bolt. 2" rail to spacer button head bolt.

(B) (5/8" hex bolts required for terminal connector)

TERMINAL CONNECTOR : The terminal connector may also be used on the MBGF(TL2) transition (See MBGF(TL2) Standard Sheet), or on the downstream end of a concrete rail located outside the horizontal clearance area of opposing traffic. (See BED Standard Sheet)

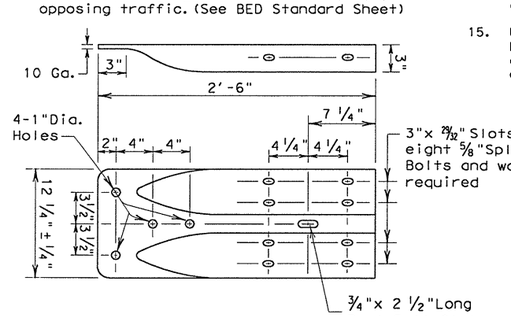

TERMINAL CONNECTOR

R = Radius
D = Diameter

Texas Department of Transportation
Design Division (Roadway)

METAL BEAM GUARD FENCE

MBGF-03A

FILE: mbgf03a.dgn	DN: MAM	CK: MAM	DW: RAR	CK: MAM	NEG:	
©TxDOT JULY 1994	DIST	FED REG	FEDERAL AID PROJECT #			SHEET
REVISIONS	AUS	6	CC 337-1-29			135
	COUNTY		CONTROL	SECT	JOB	HIGHWAY
	WILLIAMSON		0337	01	029	SH 29

...\signing_striping\mbgf03a.dgn 09/21/2004 10:44:01 AM

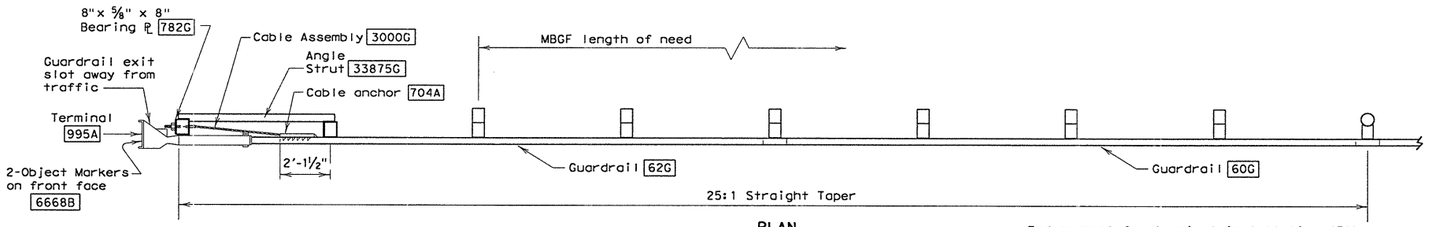

PLAN

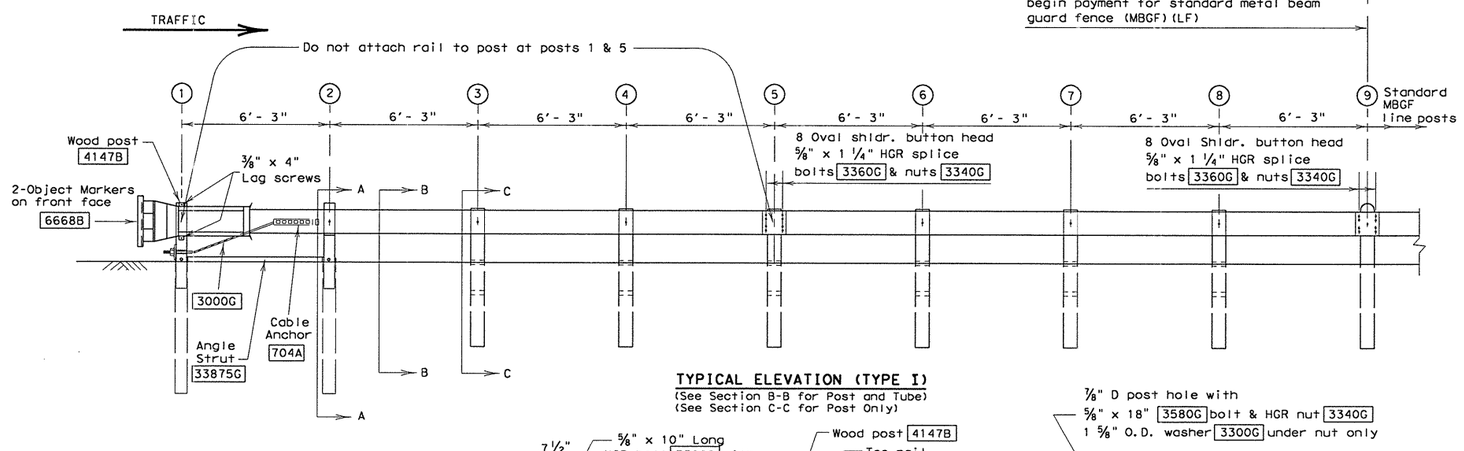

TYPICAL ELEVATION (TYPE I)
(See Section B-B for Post and Tube)
(See Section C-C for Post Only)

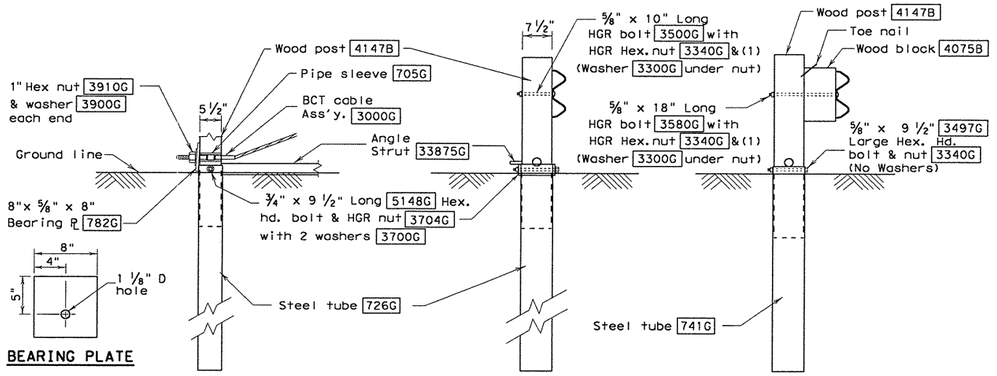

BEARING PLATE

PARTIAL VIEW AT POST #1

SECTION A-A
(at post 2)

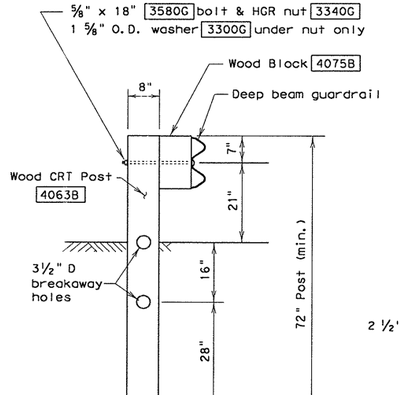

SECTION B-B
(Typ. at Posts 3 thru 8, Type II & III)

SECTION C-C
(Typ. at post only positions)

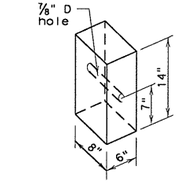

WOOD BLOCKOUT
4075B

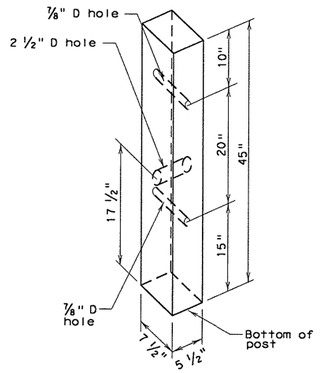

All measurements should be taken from bottom of posts.

WOOD POST
4147B

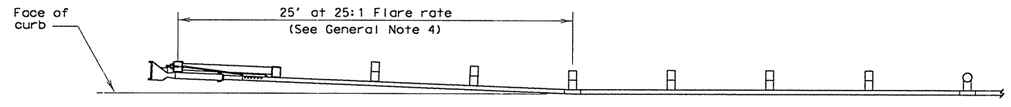

DETAIL A
Placement at curbed locations

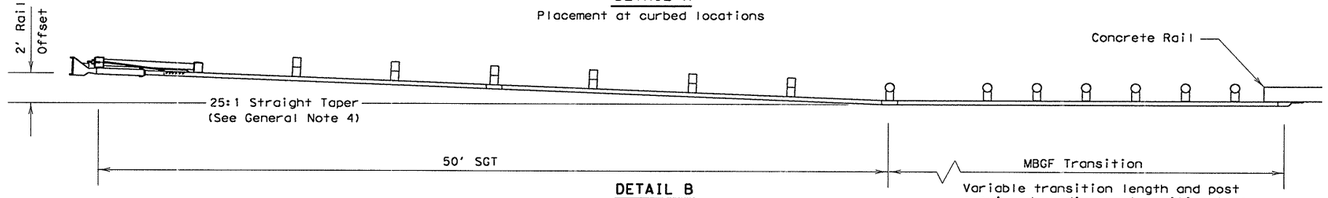

DETAIL B
Usual minimum placement to protect bridge ends
Variable transition length and post spacing depending on transition type

GENERAL NOTES

1. The Type of SGT unit will be specified elsewhere in the plans. Numbers in circles indicate post position. The Type of SGT unit chosen is a maintenance consideration and does not affect the systems performance.

Post & Tube Options		Post Only
Type I	Posts ① thru ②	Posts ③ thru ⑧
Type II	Posts ① thru ④	Posts ⑤ thru ⑧
Type III	Posts ① thru ⑧	None

2. If the SGT system must be placed on a radius, the minimum radius is 150 feet.
3. All bolts, nuts, cable assemblies, cable anchors, steel tubes & bearing plates shall be galvanized.
4. For non-curb installations, the MBGF will be flared at a rate of 25:1 over the first 50 foot of the system to prevent the terminal head from encroaching on the shoulder. The flare may be decreased or eliminated for specific installations if directed by the Engineer. A 25:1 flare rate will be used at curb sections, beginning at post number 5 and ending at post number one.
5. The steel tubes shall not protrude more than 4 inches above ground. Site grading may be necessary to meet this requirement.
6. The steel tubes may be driven with an approved driving head. They shall not be driven with the wood post in the tube. If the steel tubes are placed in drilled holes, the backfill material must be satisfactorily compacted to prevent tube settlement.
7. When rock excavation is encountered, a 12 inch diameter post hole, 20 inches deep may be used if approved by the Engineer. Granular material will be placed in the bottom of the hole approximately 2 ½ inches deep to provide drainage. The steel tube sleeves will be field cut to 20 inches in length, placed in the hole and backfilled with adequately compacted material excavated from the hole.
8. The breakaway cable assembly must be taut. A locking device, (vice grips or channel lock pliers) should be used to prevent the cable from twisting when tightening the nuts.
9. The wood blockouts shall be "toe nailed" to the rectangular wood posts to prevent them from turning when the wood shrinks.
10. For curb installations, the soil tubes and posts shall be installed at the proper ground elevation behind the curb. The posts will then require field drilling new holes to accommodate the rail to post connection bolt to maintain the proper height of the rail above the gutter pan. The excess post length above the rail will be removed if directed by the Engineer.
11. An object marker shall be installed on the front of the impact head as detailed on D&OM(VIA).
12. A special site evaluation should be considered, prior to using this end treatment where there is less than 25 feet between the extrusion side of the end treatment and any adjacent driving lane.

BILL OF MATERIAL

Code #	POST & TUBE OPTIONS Type I Qty.	Type II Qty.	Type III Qty.	DESCRIPTION
62G	1	1	1	#1 Deep Beam Guardrail (12 Ga) at 25'
60G	1	1	1	#2 Deep Beam Guardrail (12 Ga) at 25'
726G	2	2	2	Steel Tube - 6"x 8"x 72"x 1/8" min
741G	0	2	6	Steel Tube - 6" x 8" x 54" x 1/8" min
4147B	2	4	8	Wood Posts - 5 ½" x 7 ½" x 45"
4063B	6	4	0	Wood CRT Posts - 6"x 8"x 72"
4075B	6	6	6	Wood Block - 6"x 8"x 14"
705G	1	1	1	Pipe Sleeve - 2" std. pipe x 5 ½"
782G	1	1	1	Bearing Plate - 8"x 8"x 5/8"
704A	1	1	1	Cable Anchor
3000G	1	1	1	Cable Assembly (3/4" x 78")
33875G	1	1	1	Angle Strut
995A	1	1	1	ET-2000 Plus Guardrail Terminal
				HARDWARE
5148G	2	2	2	3/4" x 9 ½" Hex Hd (Top of tubes 1&2)A325
3300G	7	7	7	5/8" Washers
3478G	2	2	2	5/8" x 7 ½" Hex Bolt
3500G	1	1	1	5/8" x 10" Post Bolt (Post 2 of LET)
3580G	6	6	6	5/8" x 18" HGR Post Bolt (posts ③ thru ⑧)
3360G	16	16	16	5/8" x 1 1/4" HGR Splice Bolt
3340G	25	27	31	5/8" HGR Nut (16-spl, 7-posts)
4228G	2	2	2	3/8" x 4" Lag Screw
3910G	2	2	2	1" Hex Nut (Anchor Cable)
3900G	2	2	2	1" Washer (Anchor Cable)
6668B	2	2	2	Object Marker (12" x 12")
3700G	4	4	4	3/4" Washer
3704G	2	2	2	3/4" Heavy Hex Nut
3497G	0	2	6	5/8" x 9 ½" Hex Hd (Top of Tubes 3-8)A307

POST & TUBE OPTIONS		
Type I	Posts ①	thru ②
Type II	Posts ①	thru ④
Type III	Posts ①	thru ⑧

R = Radius
D = Diameter

Texas Department of Transportation
Design Division (Roadway)

SINGLE GUARDRAIL TERMINAL
(ET-2000 PLUS)
(WOOD POST)

SGT(7)-03A

FILE: sgt703a.dgn	DN: MAM	CK: MAM	DW: BGD	CK:	NEG: R0000
©TxDOT APRIL 1997	DIST	FED REG	FEDERAL AID PROJECT		SHEET
REVISIONS	AUS	6	CC 337-1-29		136
	COUNTY		CONTROL	SECT	JOB	HIGHWAY
	WILLIAMSON		0337	01	029	SH 29

...\signing_striping\sgt703a.dgn 09/21/2004 10:44:03 AM

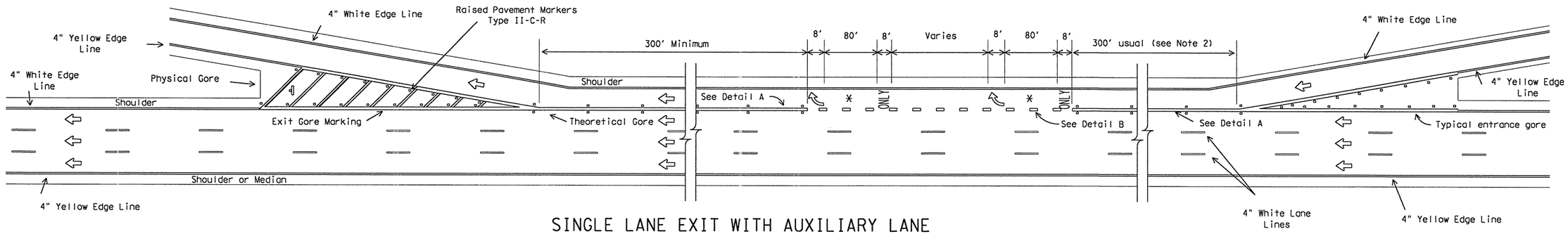

SINGLE LANE EXIT WITH AUXILIARY LANE

(See Note 5)

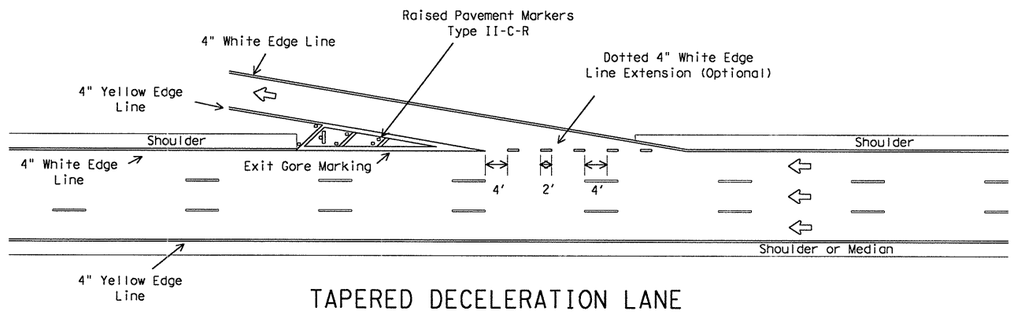

TAPERED DECELERATION LANE

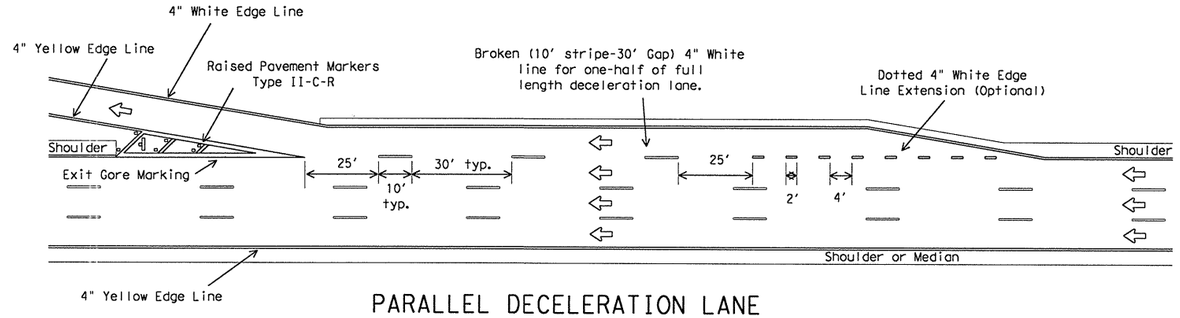

PARALLEL DECELERATION LANE

LEGEND

- - OM-2, or approved surface mount object marker installed 2 to 10 feet from Physical Gore. Mounting height is approximately 36 inches.
- - Denotes direction of traffic.
- - Pavement marking arrows (white).
- - Arrow markings are optional, however "ONLY" is required if arrow is used.

GENERAL NOTES:

1. Pavement markings shall be white except as otherwise noted.
2. Length of 12" white line may vary depending on location.
3. Lane drop markings are to be used to separate lanes that are required to go in different directions.
4. A lane drop (EXIT ONLY) condition is typically when the nearest entrance ramp is greater than 2000 feet upstream of the exit ramp, measured from theoretical gore of entrance ramp to theoretical gore of exit ramp.
5. All pavement marking materials shall meet the required Departmental Material Specifications as specified by the plans.

SPECIFICATION REFERENCE TABLE

MATERIAL SPECIFICATIONS	
PAVEMENT MARKERS (REFLECT.)	DMS-4200
EPOXY	DMS-6100
BITUMINOUS ADHESIVE FOR PAVE. MKS.	DMS-6130

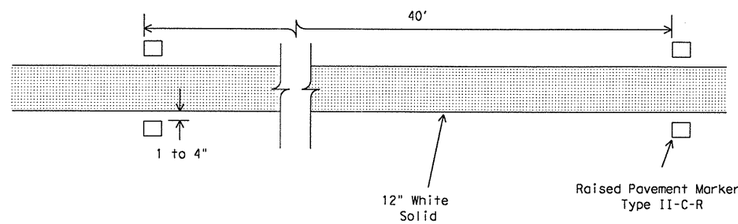

DETAIL A

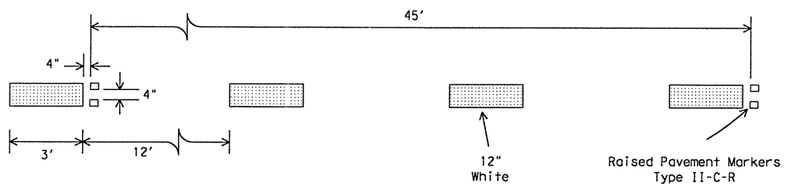

DETAIL B

STANDARD PLANS
Texas Department of Transportation
Traffic Operations Division

TYPICAL STANDARD FREEWAY PAVEMENT MARKINGS ENTRANCE AND EXIT RAMPS

FPM(2)-00A

© TxDOT February 1977

DN: BAS	CK: GRB	DW: FDN	CK: CAL

REVISIONS	STATE DISTRICT	FEDERAL REGION	FEDERAL AID PROJECT	SHEET
4-92	AUS	6	CC 337-1-29	157
8-95				
5-00	COUNTY		CONTROL / SECTION / JOB	HIGHWAY
8-00	WILLIAMSON		0337 / 01 / 029	SH 29

TYPICAL DEAD END BARRICADE INSTALLATION

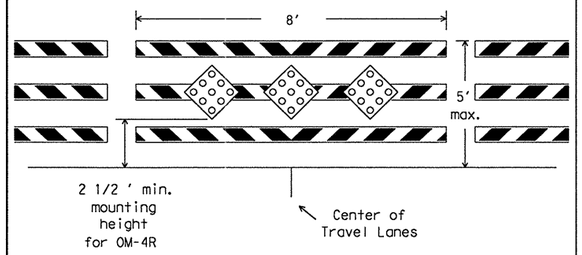

Barricade striping is red and white sloping toward the center of the roadway. (See Note 1)

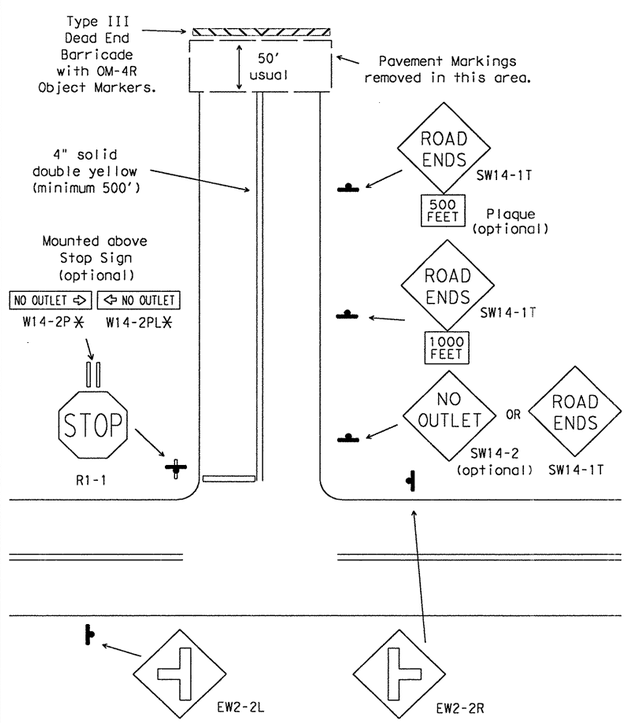

* W14-1P DEAD END plaque may be used as an alternate.

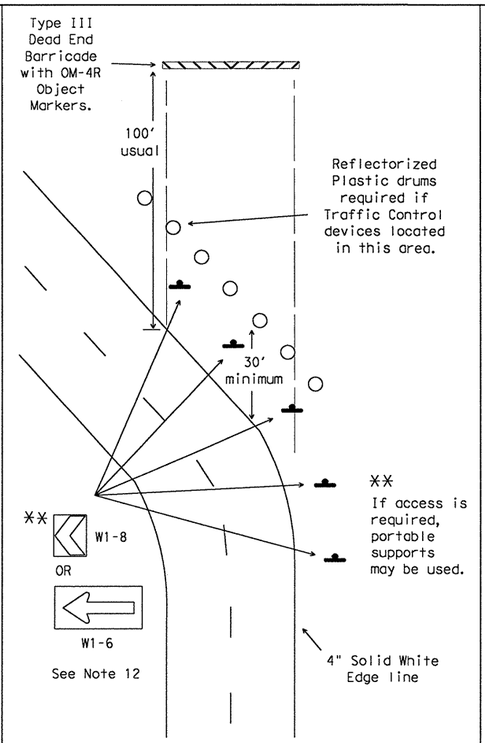

Devices shown for one direction of travel

DEPARTMENTAL MATERIAL SPECIFICATIONS	
PLYWOOD SIGN BLANKS	DMS-7100
ALUMINUM SIGN BLANKS	DMS-7110
SIGN HARDWARE	DMS-7120
WINGED CHANNEL POSTS	DMS-7130
FLAT SURFACE REFLECTIVE SHEETING	DMS-8300
VINYL NON-REFLECTIVE DECAL SHEETING	DMS-8320
DELINEATORS AND OBJECT MARKERS	DMS-8600

COLOR	USAGE	SHEETING MATERIAL
RED	BACKGROUND	TYPE C (HIGH SPECIFIC INTENSITY)
WHITE	BACKGROUND	TYPE C (HIGH SPECIFIC INTENSITY)
YELLOW	BACKGROUND	TYPE C (HIGH SPECIFIC INTENSITY)
BLACK	LEGEND & BORDERS	VINYL NON-REFLECTIVE SHEETING

GENERAL NOTES:

1. Barricade striping shall be red and white reflective sheeting for all permanent road closures. Orange and white reflective sheeting may be substituted for locations where duration of road closure is expected to be 18 months or less, or when approved by the Engineer. Red and orange reflective sheeting shall not be combined on barricades or locations.
2. Barricades shall be designed and constructed to Compliant Work Zone Traffic Control Device List (CWZTCD) standards in a first-class workmanship manner of clean sound material. Components made of lumber shall be painted with a minimum of two coats of white paint to ensure thorough coverage and a uniform white color. Barricade striping material shall meet the color and retroreflective requirements of Departmental Material Specification DMS-8300, Type C.
3. Post type breakaway supports shall be used as barricade supports. Barricades may be fabricated with "skid" supports if approved by the Engineer. Skid supports should be anchored using sand bags to prevent movement. For construction details of post (fixed Type III barricades) see CWZTCD list Part D.2.f. The dead end road barricades may also be anchored to the pavement using the bolt down median anchor manufactered by Universal Anchor System shown on SMD(FRP). The barricades shall be built using FRP posts and approved rails as shown on the CWZTCD List.
4. Barricades shall not be placed parallel to traffic unless a minimum adequate clear zone of 30 feet from edge of travel lane is provided.
5. A minimum of one 8-foot wide barricade and three OM-4R object markers shall be required for all locations. Barricades shall extend across all travel lanes and shoulders if shoulders are present. Barricades may be extended to the ROW as directed by Engineer.
6. Stockpiled materials shall not be placed on traffic side of barricades.
7. OM-4 object markers shall be mounted to the middle rail using two 1/2" through bolts with flat washers and lock washers.
8. OM-4 object markers shall be constructed of 0.063 aluminum and shall meet the color and reflective requirements of DMS-8300 Type C and DMS-8600.
9. Plastic drums shall meet the requirements as listed on the CWZTCD list or the BC Standards. Plastic drums may be anchored with adhesive to prevent movement.
10. All signs and chevrons shall be installed with hardware and support at the minimum mounting height in accordance with the SMD and BC Standards. Signs shall be mounted at a 7 foot minimum height. Signs shall not be attached to barricades.
11. Motorists should be able to see at least three chevron signs as they approach the curve and as they drive through the curve from either direction.
12. Delineation devices such as the chevron or large arrow signs shall only be placed on the outside portion of a curve.

GENERAL NOTE FOR SIGNS:

1. The alphabets and lateral spacing between letters and numerals shall conform with the "Texas Manual on Uniform Traffic Control Devices for Streets and Highways" (TMUTCD), latest edition, and any approved changes thereto.
2. Lateral spacing of text shall provide a balanced appearance.
3. All materials shall conform to Departmental Material Specifications.
4. Legend shall be black and applied by screening process, cut-out vinyl non-reflective sheeting or combination thereof.
5. Sign blanks shall be any material that meets the DMS requirements for permenant sign substrates.

Only pre-qualified products shall be used. A copy of the "Compliant Work Zone Traffic Control Devices List" (CWZTCD) describes pre-qualified products and their sources and may be obtained by contacting:

Standards Engineer
Traffic Operations Division - TE
Texas Department of Transportation
125 East 11th Street
Austin, Texas 78701-2483
Phone (512) 416-3120
Fax (512) 416-3299

Instructions to locate the "CWZTCD" on TxDOT website are:

Start at website - www.dot.state.tx.us
Click on "About TxDOT",
Click on "Organizational Chart",
Click on Traffic Operations Box,
Click on "Compliant Work Zone Traffic Control Devices",
Click on "View PDF".
This site is printable.

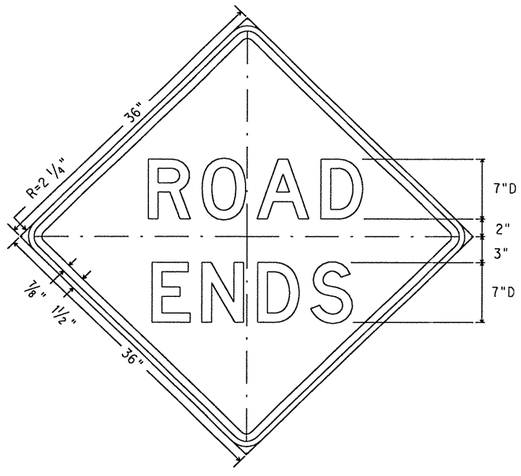

SW14-1T
36" X 36"

Letters - Black
Border - Black
Background - Yellow Refl.

STANDARD PLANS
Texas Department of Transportation
Traffic Operations Division

WORK ZONE DEAD END ROADWAY DETAILS

WZ(DERD)-03

© TxDOT August 1995	DN: - LR/MT	CK: - GRB	DW: - FDN	CK: - CAL

REVISIONS	STATE DISTRICT	FEDERAL REGION	FEDERAL AID PROJECT				SHEET
1-97	AUS	6	CC 337-1-29				157A
2-98	COUNTY		CONTROL	SECTION	JOB		HIGHWAY
4-98	WILLIAMSON		0337	01	029		SH 29
3-03							

...\TxDOT Standards\TCP\WZ.DGN 09/22/2004 09:29:30 AM

PHASE 1 - STEP 1

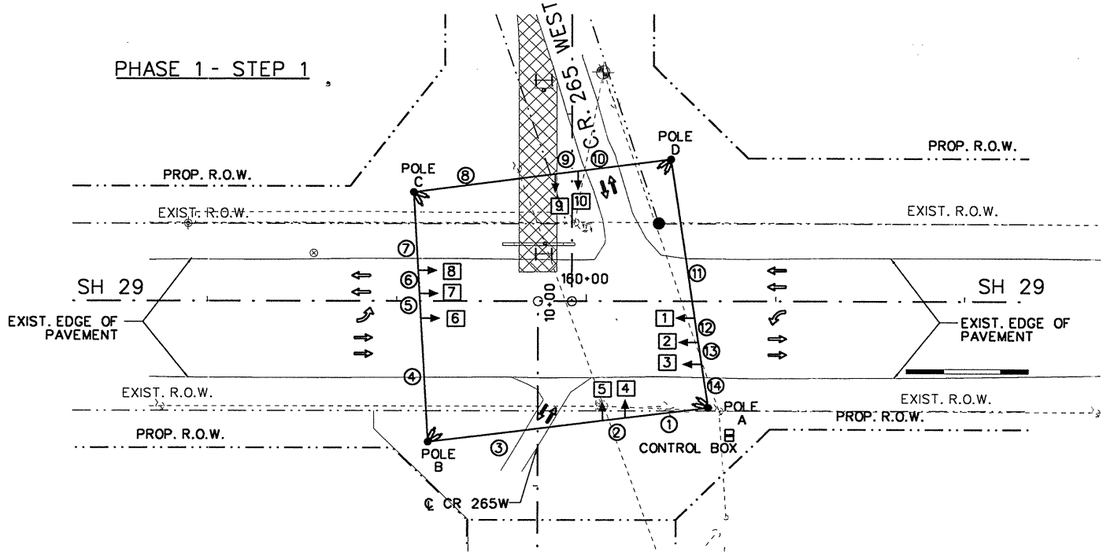

RUN & LENGTH (FT)														
RUN NO.	1	2	3	4	5	6	7	8	9	10	11	12	13	14
LENGTH	44	12	93	67	13	12	42	75	12	50	85	13	12	24
PHASE 1 -STEP 1														

PHASE 1 - STEP 2

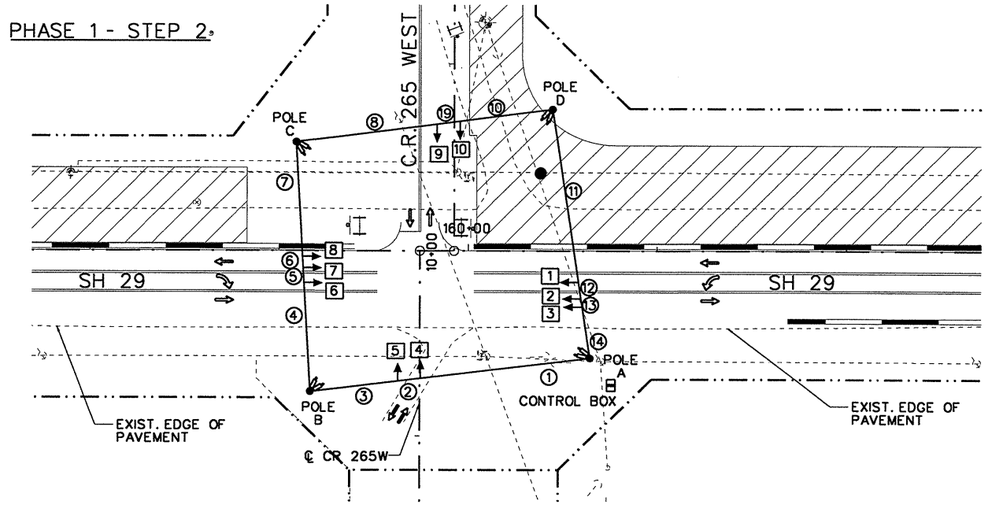

RUN & LENGTH (FT)														
RUN NO.	1	2	3	4	5	6	7	8	9	10	11	12	13	14
LENGTH	91	12	47	59	8	6	61	75	12	50	93	9	5	28
PHASE 1 -STEP 2														

SIGNAL HEAD PLACEMENT DURING CONSTRUCTION MAX. DISTANCE 4 CNDR.			
HEAD NO.	FT	HEAD NO.	FT
HEAD 1	84	HEAD 6	215
HEAD 2	76	HEAD 7	229
HEAD 3	69	HEAD 8	261
HEAD 4	90	HEAD 9	356
HEAD 5	102	HEAD 10	369

LEGEND

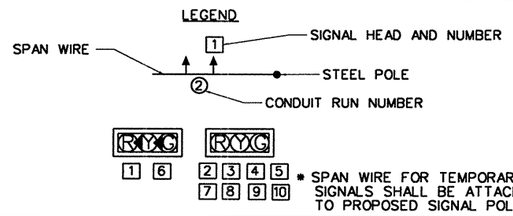

* SPAN WIRE FOR TEMPORARY SIGNALS SHALL BE ATTACHED TO PROPOSED SIGNAL POLES.

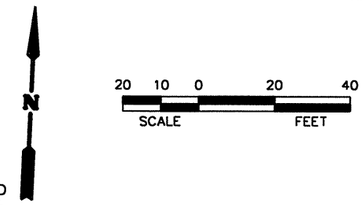

NOTES:

THE CONTRACTOR IS RESPONSIBLE FOR ADJUSTING SIGNAL HEADS TO THE SPECIFIC TRAFFIC PHASE UNDER CONSTRUCTION. THE WORK IS SUBSIDIARY TO ITEM 680.

PHASE 1 - STEP 3

RUN & LENGTH (FT)														
RUN NO.	1	2	3	4	5	6	7	8	9	10	11	12	13	14
LENGTH	42	6	102	59	8	6	61	75	12	50	93	9	5	28
PHASE 1 -STEP 3														

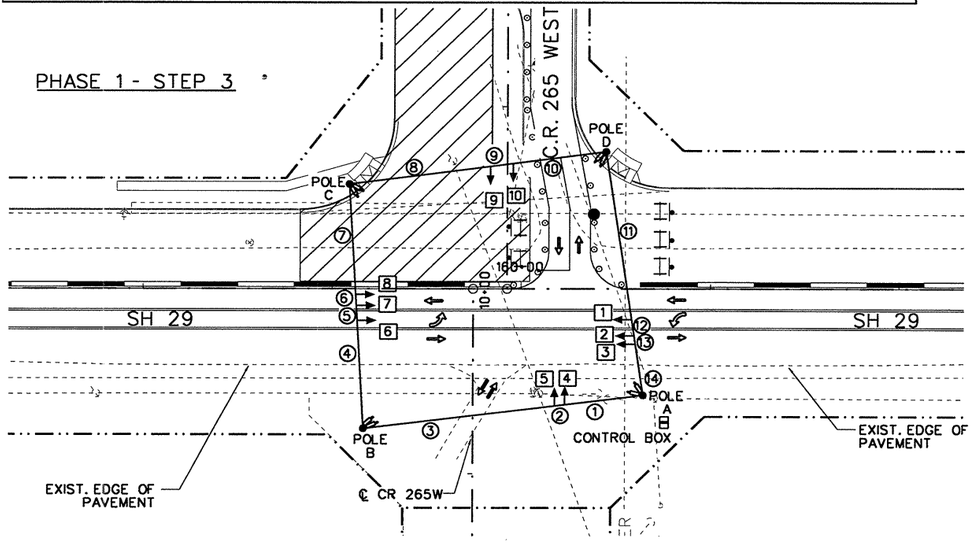

PHASE 2 - STEP 1

RUN & LENGTH (FT)														
RUN NO.	1	2	3	4	5	6	7	8	9	10	11	12	13	14
LENGTH	89	12	24	24	101	11	11	11	137	51	8	6	69	
PHASE 2 -STEP 1														

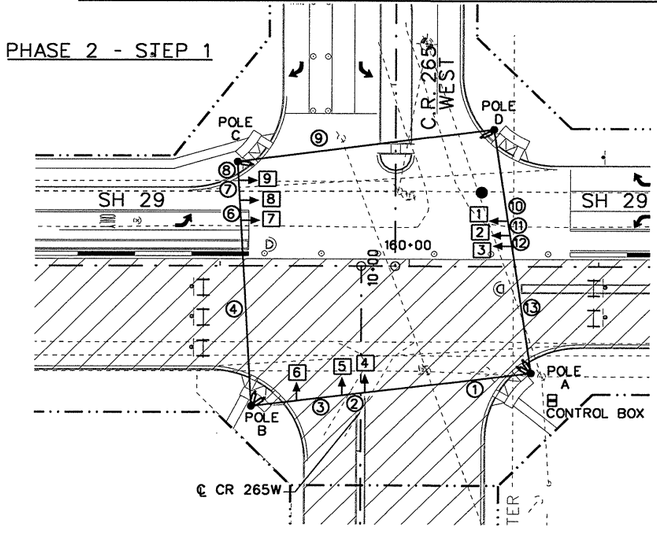

Michael P Meroney 2/11/04

STATE OF TEXAS
MICHAEL P. MERONEY
73535
REGISTERED
PROFESSIONAL ENGINEER

NO.	REVISION	BY	DATE

CP&Y Chiang, Patel & Yerby, Inc.

© 2004

Texas Department of Transportation

SH 29 WEST

TEMPORARY TRAFFIC SIGNAL LAYOUT

SH 29 / CR 265 WEST

		FED. ROAD DIV. NO.	STATE	FEDERAL AID PROJECT NO.				SHEET NO.
Designed:	AJW	6	TEXAS					158
Checked:	BCM	STATE DIST. NO.	COUNTY	CONTROL NO.	SECTION NO.	JOB NO.	HIGHWAY NO.	
Drawn:	AJW	14	WILLIAMSON	0337	01	029	SH 29	
Checked:								

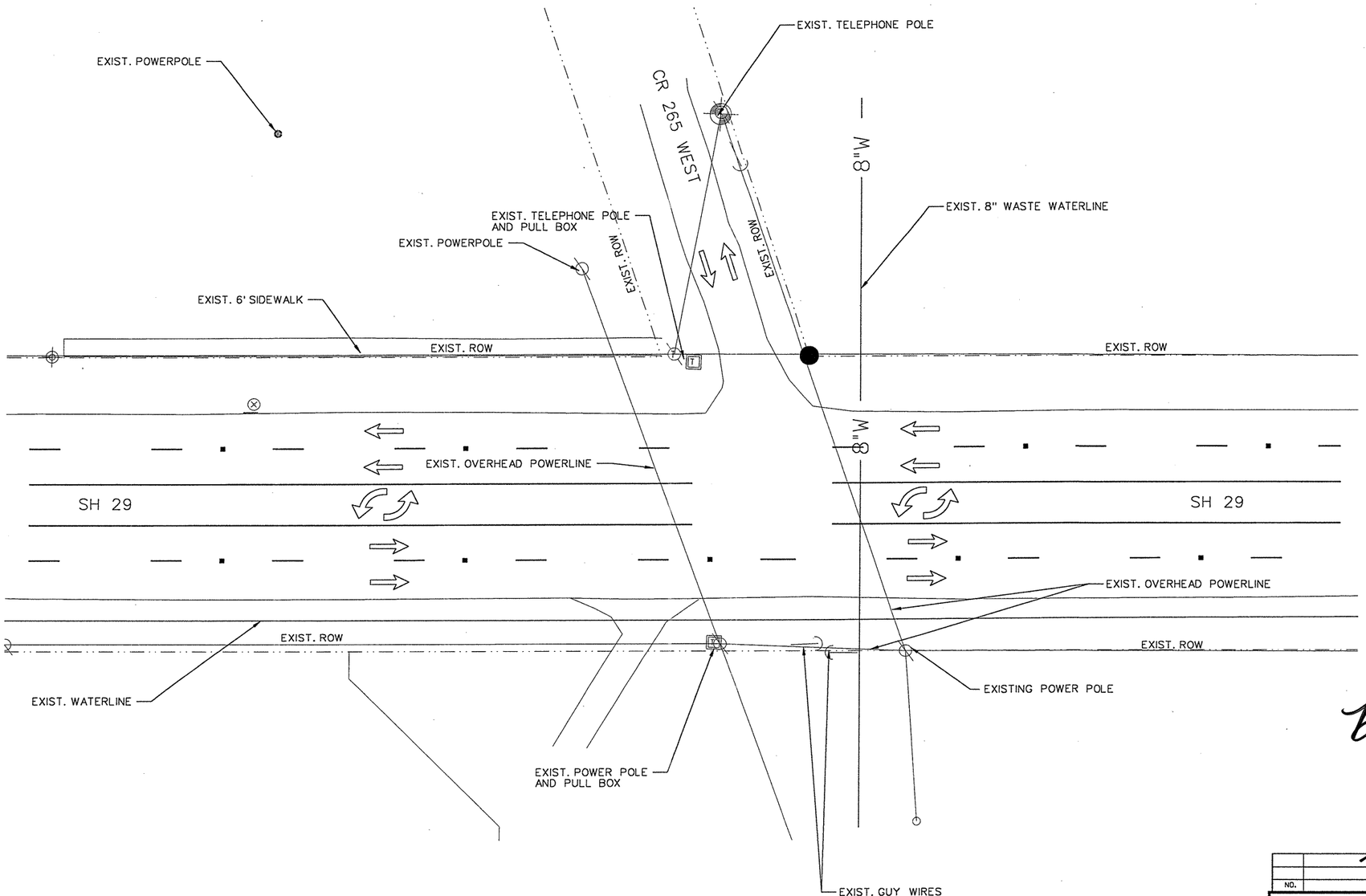

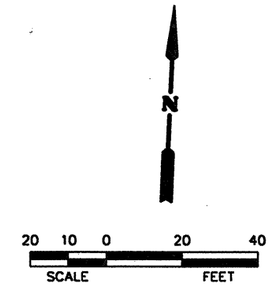

Bonnie C. Moss

STATE OF TEXAS
BONNIE C. MOSS
93004
REGISTERED PROFESSIONAL ENGINEER

September 21, 2004

NO.	REVISION	BY	DATE

CP&Y Chiang, Patel & Yerby, Inc.

© 2004

Texas Department of Transportation

SH 29 WEST

EXISTING TRAFFIC SIGNAL LAYOUT

SH 29 / CR 265 WEST

		FED. ROAD DIV. NO.	STATE	FEDERAL AID PROJECT NO.				SHEET NO.
Designed:	AJW	6	TEXAS					159
Checked:	BCM	STATE DIST. NO.	COUNTY	CONTROL NO.	SECTION NO.	JOB NO.	HIGHWAY NO.	
Drawn:	AJW	14	WILLIAMSON	0337	01	029	SH 29	
Checked:								

ITEMS PROVIDED BY TXDOT

ESTIMATED QUANTITIES-SHEET TOTAL

EST	UNIT	DESCRIPTION
1	EA	TRAF SIG CNTRL
4	EA	60' MAST ARM POLE W/ LUM
4	EA	R10-10 TURN SIGN
4	EA	R10-4b (L) SIGNS
4	EA	R10-4b (R) SIGNS
4	EA	VIVDS CAMERA BRACKET
1	EA	MONITOR FOR VIVDS CAMERA
1	EA	RADIO, LOCAL
1	EA	YAGI, ANTENNA
1	EA	VIVDS PROCESSOR SYSTEM
4	EA	VIVDS CAMERA

ITEMS PROVIDED BY CONTRACTOR

ESTIMATED QUANTITIES-SHEET TOTAL

EST	UNIT	DESCRIPTION
4	EA	SIGNAL POLE 250 WATT LUMINAIRE
17	LF	CONDUIT (PVC) (SCHD 40) (2 IN)
1410	LF	CONDUIT (PVC) (SCHD 40) (3 IN)
36	LF	CONDUIT (PVC) (SCHD 40) (4 IN)
17	LF	ELEC CONDUCTOR (NO. 6) INSULATED
17	LF	ELEC CONDUCTOR (NO. 6) BARE
553	LF	ELEC CONDUCTOR (NO. 8) BARE
688	LF	ELEC CONDUCTOR (NO. 8) INSULATED *
3	EA	GROUND BOX TY A (122311) W/ APRON
1	EA	GROUND BOX TY C (162911) W/ APRON
1	EA	ELEC SERV TY D (120/240)100(NS)AL(E)PS(U)
2.22	CY	TRAF SIG CNTRL FND
88	LF	FND FOR TRAF SIG (TY A) (48 IN DRIL SHFT)
18	LF	FND FOR TRAF SIG (TY A) (24 IN DRIL SHFT)
1	EA	INSTAL OF HWY TRAF SIG (ISOLATED)
45	EA	VEH SIG SEC (12 IN) W/O LENS & REFL
8	EA	PED SIG SEC (2 INDICATIONS IN 1 SEC)
15	EA	BACK PLATE (3 SEC) (12 IN)
1911	LF	TRAF SIG CBL (TY A) (4 CONDR) (14 AWG) **
1266	LF	TRAF SIG CBL (TY A) (5 CONDR) (14 AWG) **
4	EA	TRAF SIG POLE (STL) MAS (INSTAL)
8	EA	PED DETECT (PUSH BTN)
15	EA	12 IN LED TRF SIGNAL LAMP (RED BALL)
8	EA	12 IN LED TRF SIGNAL LAMP (YELLOW BALL)
8	EA	12 IN LED TRF SIGNAL LAMP (GREEN BALL)
7	EA	12 IN LED TRF SIGNAL LAMP (YEL ARW)
7	EA	12 IN LED TRF SIGNAL LAMP (GRN ARW)
100	LF	LMR 600 RADIO CABLE
1004	LF	VIVDS COMMUNICATION CABLE (COAXIAL) ***
1004	LF	VIVDS POWER CABLE (3 CONDR) (16 AWG) ***

* FOR CONTRACTOR'S INFORMATION ONLY.
** QUANTITY INCLUDES 18 LF OF POLE HEIGHT PER CABLE.
*** QUANTITY INCLUDES 30 LF OF POLE HEIGHT PER CABLE.

NOTE: ILLUMINATION WIRES ARE TO BE RAN IN A SEPARATE CONDUIT APART FROM THE SIGNAL CONDUCTORS IN THE BORED SECTIONS.

ELECTRICAL SERVICE DATA

SERVICE POLE NO	SERVICE POLE DESCRIPTION (SEE ED (3) - 98)	SERVICE CONDUIT SIZE	SERVICE CONDUCTORS NO/SIZE	SAFETY SWITCH AMPS	MAIN DISCONNECT		TWO-POLE CONTACTOR AMPS	PANELBOARD/ LOADCENTER AMP RATING	CIRCUIT NO	BRANCH CKT. BKR. POLE/AMPS	CIRCUIT AMP LOAD	SERVICE KVA LOAD
					SWITCH AMP/FUSE	CKT. BKR. POLE/AMP						
POLE I	TY D (120/240) 100(NS) AL(E) PS(U)	3"	3/#2	NA	NA	2P/100	20	100	T.S.	1P/50	<20	<7.1
									LIGHTING	2P/20	3	
									CAMERA	1P/20	4	

SIGNAL POLE LOCATION

POLE NUMBER	NORTH	EAST	STATION	OFFSET
POLE A	10, 205, 004.46	3, 125, 053.97	160+64.53	57.39 RT
POLE B	10, 204, 980.14	3, 124, 906.84	159+16.53	75.65 RT
POLE C	10, 205, 113.21	3, 124, 893.90	159+09.05	57.83 LT
POLE D	10, 205, 136.46	3, 125, 028.69	160+44.68	75.54 LT
POLE E	10, 205, 127.45	3, 124, 897.44	159+13.17	71.91 LT
POLE F	10, 205, 135.22	3, 125, 041.52	160+57.46	73.77 LT
POLE G	10, 204, 991.88	3, 125, 050.52	160+60.57	69.81 RT
POLE H	10, 205, 998.10	3, 125, 067.66	160+77.94	64.31 RT
POLE I	10, 205, 003.54	3, 125, 059.20	160+69.72	58.53 RT
CONTROLLER (J)	10, 204, 997.07	3, 125, 075.09	160+85.31	65.64 RT

* STATION AND OFFSETS BASED ON ℄ SH 29

SIGNING
- S1 SH 29 (D3-1)
- S2 CR 265 WEST (D3-1)
- S3 LEFT TURN SIGNAL (R10-10)

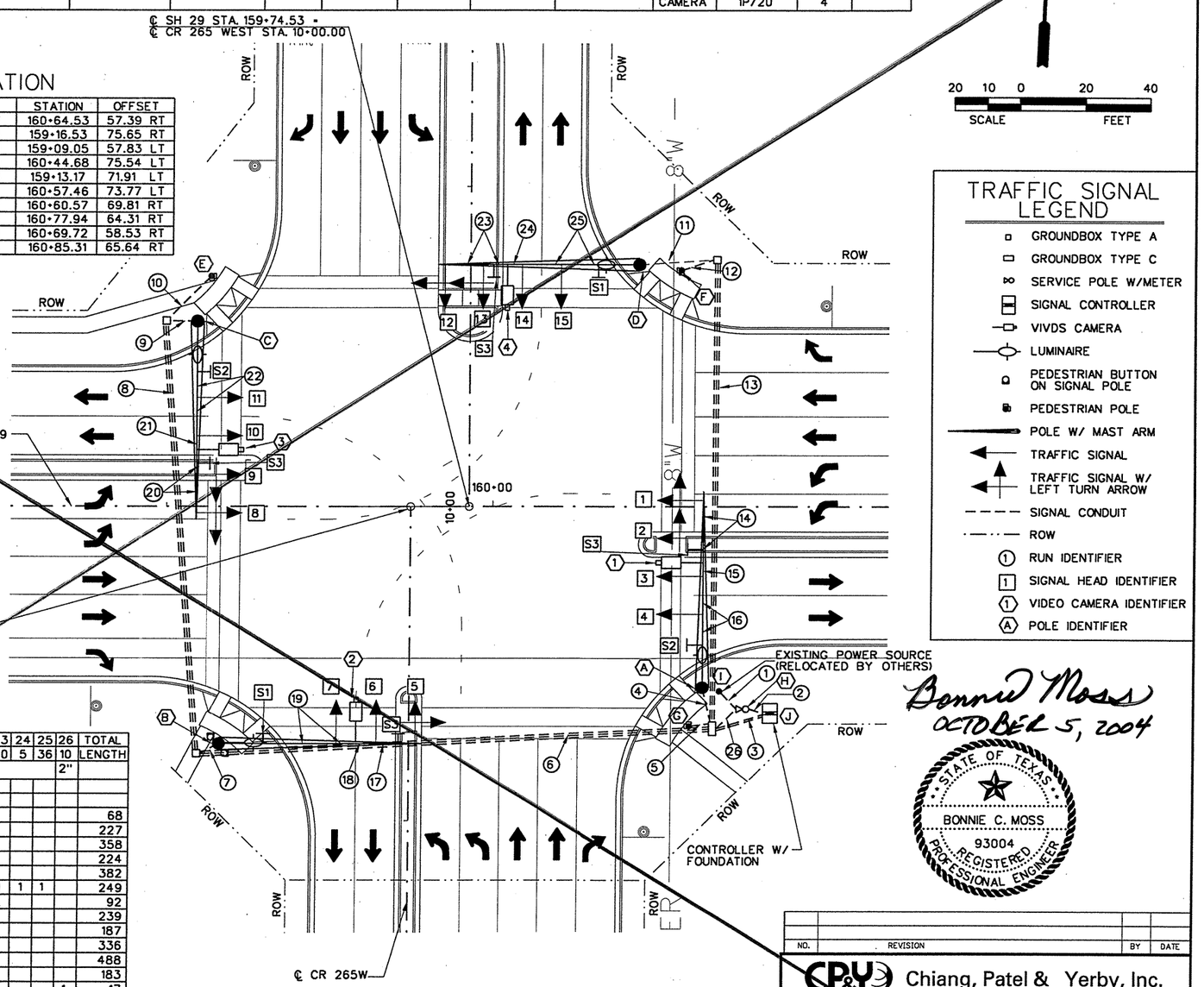

TRAFFIC SIGNAL LEGEND

- GROUNDBOX TYPE A
- GROUNDBOX TYPE C
- SERVICE POLE W/METER
- SIGNAL CONTROLLER
- VIVDS CAMERA
- LUMINAIRE
- PEDESTRIAN BUTTON ON SIGNAL POLE
- PEDESTRIAN POLE
- POLE W/ MAST ARM
- TRAFFIC SIGNAL
- TRAFFIC SIGNAL W/ LEFT TURN ARROW
- SIGNAL CONDUIT
- ROW
- (1) RUN IDENTIFIER
- [1] SIGNAL HEAD IDENTIFIER
- ⟨1⟩ VIDEO CAMERA IDENTIFIER
- (A) POLE IDENTIFIER

CONDUIT AND CONDUCTOR SCHEDULE

	RUN NUMBER	1	2	3	4	5	6	7	8	9	10	11	12	13	14	15	16	17	18	19	20	21	22	23	24	25	26	TOTAL
	RUN LENGTH	8	7	18	12	7	156	6	138	10	18	23	11	147	20	4	38	12	6	41	20	4	36	20	5	36	10	LENGTH
	CONDUIT SIZE		2"	2-4"	3"	3"	3-3"	3"	3-3"	3"	3"	3"	3"	3-3"	MAST ARM												2"	
AWG	CIRCUIT																											
#14 4 - COND IMSA CABLE	SIGNALS Ø2			1	1												1											68
	Ø4			1			1	1											1	1				1				227
	Ø6			1			1		1	1																		358
	Ø8			1							1		1															224
	SIGNALS Ø1			1			1		1	1											1	1	1					382
	Ø3			1							1		1											1	1	1		249
	Ø5			1	1										1	1	1											92
	Ø7			1			1	1										1	1	1								239
#14 5 - COND IMSA CABLE	PED SIGNAL & BUTTONS Ø2			1		1	1	1																				187
	Ø4			1			1	1	1		1																	336
	Ø6			1			1		1		1		1	1														488
	Ø8			1		1							1	1														183
#6 THHN /THWN	120 POWER HOT	1																									1	17
	120 POWER COMMON	1																									1	17
#8 BARE	BARE BOND GROUND	1		1	1	1	1	1	1	1	1	1	1	1													1	553
2/#8 XHHW COND ILLUMIN	STREET LIGHTS				1		2	1	1	1		1		1													4	688
#16 3 - COND IMSA CABLE	VIVDS CAMERAS			4	1		2	1	1	1		1		1		1	1			1		1	1		1	1		884
COAX CABLE	VIVDS CAMERAS			4	1		2	1	1	1		1		1		1	1			1		1	1		1	1		884

- (A) 60' MAST ARM WITH LUMINAIRE AND VIVDS CAMERAS.
- (B) 60' MAST ARM WITH LUMINAIRE, 2-PED SIGNALS, PUSH BUTTONS, AND VIVDS CAMERAS.
- (C) 60' MAST ARM WITH LUMINAIRE AND VIVDS CAMERAS.
- (D) 60' MAST ARM WITH LUMINAIRE AND VIVDS CAMERAS.
- (E) PED SIGNAL POLE W/ PUSH BUTTONS
- (F) PED SIGNAL POLE W/ PUSH BUTTONS
- (G) PED SIGNAL POLE W/ PUSH BUTTONS
- (H) NEW SERVICE PEDESTAL WITH METER
- (I) POWER SOURCE
- (J) TRAFFIC SIGNAL CONTROLLER

Bonnie Moss
OCTOBER 5, 2004

STATE OF TEXAS
BONNIE C. MOSS
93004
REGISTERED PROFESSIONAL ENGINEER

NO.	REVISION	BY	DATE

Chiang, Patel & Yerby, Inc.

© 2004

Texas Department of Transportation

SH 29 WEST

TRAFFIC SIGNAL LAYOUT
SH 29 / CR 265 WEST

		FED. ROAD DIV. NO.	STATE	FEDERAL AID PROJECT NO.	SHEET NO.
Designed:	AJW	6	TEXAS		160
Checked:	BCM	STATE DIST. NO.	COUNTY	CONTROL NO. / SECTION NO. / JOB NO.	HIGHWAY NO.
Drawn:	AJW	14	WILLIAMSON	0337 / 01 / 029	SH 29
Checked:					

j:\TXD0153-03\533Wtl01.040 10/05/2004 10:36:42 AM

ITEMS PROVIDED BY TXDOT

ESTIMATED QUANTITIES-SHEET TOTAL

EST	UNIT	DESCRIPTION
1	EA	TRAF SIG CNTRL
4	EA	60' MAST ARM POLE W/ LUM
4	EA	R10-10 TURN SIGN
4	EA	R10-4b (L) SIGNS
4	EA	R10-4b (R) SIGNS
4	EA	VIVDS CAMERA BRACKET
1	EA	MONITOR FOR VIVDS CAMERA
1	EA	RADIO, LOCAL
1	EA	YAGI, ANTENNA
1	EA	VIVDS PROCESSOR SYSTEM
4	EA	VIVDS CAMERA

ITEMS PROVIDED BY CONTRACTOR

ESTIMATED QUANTITIES-SHEET TOTAL

EST	UNIT	DESCRIPTION
4	EA	SIGNAL POLE 250 WATT LUMINAIRE
17	LF	CONDUIT (PVC) (SCHD 40) (2 IN)
1410	LF	CONDUIT (PVC) (SCHD 40) (3 IN)
36	LF	CONDUIT (PVC) (SCHD 40) (4 IN)
17	LF	ELEC CONDUCTOR (NO. 6) INSULATED
17	LF	ELEC CONDUCTOR (NO. 6) BARE
553	LF	ELEC CONDUCTOR (NO. 8) BARE
688	LF	ELEC CONDUCTOR (NO. 8) INSULATED *
3	EA	GROUND BOX TY A (122311) W/ APRON
1	EA	GROUND BOX TY C (162911) W/ APRON
1	EA	ELEC SERV TY D (120/240)100(NS)AL(E)PS(U)
2.22	CY	TRAF SIG CNTRL FND
88	LF	FND FOR TRAF SIG (TY A) (48 IN DRIL SHFT)
18	LF	FND FOR TRAF SIG (TY A) (24 IN DRIL SHFT)
1	EA	INSTAL OF HWY TRAF SIG (ISOLATED)
45	EA	VEH SIG SEC (12 IN) W/O LENS & REFL
8	EA	PED SIG SEC (2 INDICATIONS IN 1 SEC)
15	EA	BACK PLATE (3 SEC) (12 IN)
1911	LF	TRAF SIG CBL (TY A) (4 CONDR) (14 AWG) **
1266	LF	TRAF SIG CBL (TY A) (5 CONDR) (14 AWG) **
4	EA	TRAF SIG POLE (STL) MAS (INSTAL)
8	EA	PED DETECT (PUSH BTN)
15	EA	12 IN LED TRF SIGNAL LAMP (RED BALL)
8	EA	12 IN LED TRF SIGNAL LAMP (YELLOW BALL)
8	EA	12 IN LED TRF SIGNAL LAMP (GREEN BALL)
7	EA	12 IN LED TRF SIGNAL LAMP (YEL ARW)
7	EA	12 IN LED TRF SIGNAL LAMP (GRN ARW)
100	LF	LMR 600 RADIO CABLE
1004	LF	VIVDS COMMUNICATION CABLE (COAXIAL) ***
1004	LF	VIVDS POWER CABLE (3 CONDR) (16 AWG) ***

* FOR CONTRACTOR'S INFORMATION ONLY.
** QUANTITY INCLUDES 18 LF OF POLE HEIGHT PER CABLE.
*** QUANTITY INCLUDES 30 LF OF POLE HEIGHT PER CABLE.

NOTE: ILLUMINATION WIRES ARE TO BE RAN IN A SEPARATE CONDUIT APART FROM THE SIGNAL CONDUCTORS IN THE BORED SECTIONS.

ELECTRICAL SERVICE DATA

SERVICE POLE NO	SERVICE POLE DESCRIPTION (SEE ED (3) - 98)	SERVICE CONDUIT SIZE	SERVICE CONDUCTORS NO/SIZE	SAFETY SWITCH AMPS	MAIN DISCONNECT		3-POLE CONTACTOR AMPS	PANELBOARD/ LOADCENTER AMP RATING	CIRCUIT NO	BRANCH CKT. BKR. POLE/AMPS	CIRCUIT AMP LOAD	SERVICE KVA LOAD
					SWITCH AMP/FUSE	CKT. BKR. POLE/AMP						
POLE 1	TY D (120/240) 100(NS) AL(E) PS(U)	3"	3/#2	NA	NA	2P/100	20	100	T.S.	1P/50	<20	<7.1
									LIGHTING	2P/20	3	
									CAMERA	1P/20	4	

SIGNAL POLE LOCATION

POLE NUMBER	NORTH	EAST	STATION	OFFSET
POLE A	10, 205, 004.46	3, 125, 053.97	160+64.53	57.39 RT
POLE B	10, 204, 980.14	3, 124, 906.84	159+16.53	75.65 RT
POLE C	10, 205, 113.21	3, 124, 893.90	159+09.05	57.83 LT
POLE D	10, 205, 136.46	3, 125, 028.69	160+44.68	75.54 LT
POLE E	10, 205, 127.45	3, 124, 897.44	159+13.17	71.91 LT
POLE F	10, 205, 135.22	3, 125, 041.52	160+57.46	73.77 LT
POLE G	10, 204, 991.88	3, 125, 050.52	160+60.57	69.81 RT
POLE H	10, 205, 998.10	3, 125, 067.66	160+77.94	64.31 RT
POLE I	10, 205, 003.54	3, 125, 059.20	160+69.72	58.53 RT
CONTROLLER (J)	10, 204, 997.07	3, 125, 075.09	160+85.31	65.64 RT

* STATION AND OFFSETS BASED ON ℄ SH 29

SIGNING

- S1 SH 29 (D3-1)
- S2 CR 265 WEST (D3-1)
- S3 LEFT TURN SIGNAL (R10-10)

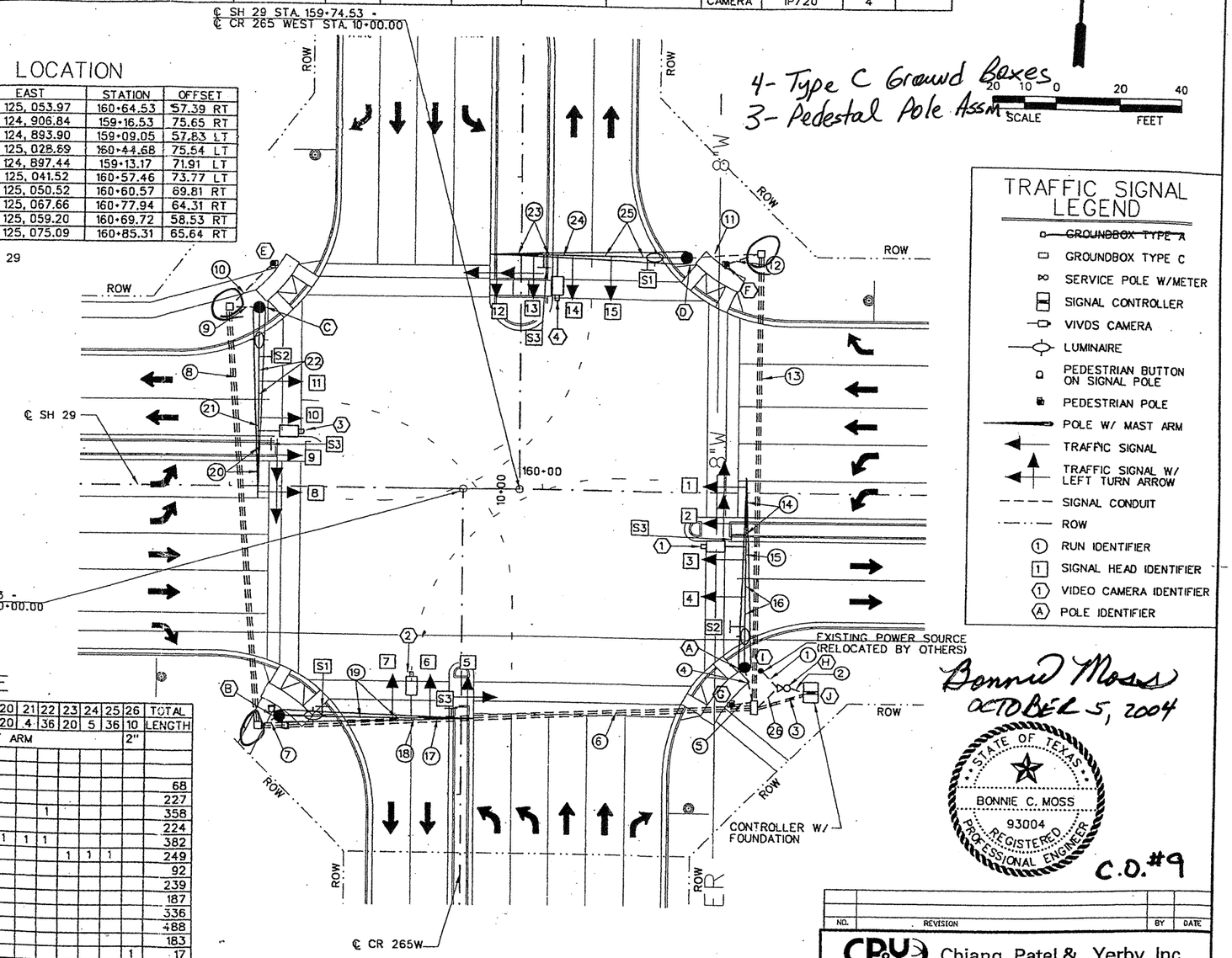

TRAFFIC SIGNAL LEGEND

- ~~GROUNDBOX TYPE A~~
- GROUNDBOX TYPE C
- SERVICE POLE W/METER
- SIGNAL CONTROLLER
- VIVDS CAMERA
- LUMINAIRE
- PEDESTRIAN BUTTON ON SIGNAL POLE
- PEDESTRIAN POLE
- POLE W/ MAST ARM
- TRAFFIC SIGNAL
- TRAFFIC SIGNAL W/ LEFT TURN ARROW
- SIGNAL CONDUIT
- ROW
- (1) RUN IDENTIFIER
- [1] SIGNAL HEAD IDENTIFIER
- (1) VIDEO CAMERA IDENTIFIER
- (A) POLE IDENTIFIER

CONDUIT AND CONDUCTOR SCHEDULE

	RUN NUMBER	1	2	3	4	5	6	7	8	9	10	11	12	13	14	15	16	17	18	19	20	21	22	23	24	25	26	TOTAL
	RUN LENGTH	8	7	18	12	7	156	6	138	10	18	23	11	147	20	4	38	12	6	41	20	4	36	20	5	36	10	LENGTH
	CONDUIT SIZE		2"	2-4"	3"	3"	3-3"	3"	3-3"	3"	3"	3"	3"	3-3"	MAST ARM												2"	
AWG	CIRCUIT																											
#14 4 - COND IMSA CABLE	SIGNALS 02			1	1												1											68
	04			1			1	1											1	1								227
	06			1			1		1	1														1				358
	08			1								1		1														224
	SIGNALS 01			1			1		1	1											1	1	1					382
	03			1								1		1														249
	05			1	1										1	1	1							1	1	1		92
	07			1			1	1											1	1	1							239
#14 5 - COND IMSA CABLE	PED SIGNAL & 02			1		1	1	1																				187
	BUTTONS 04			1			1	1	1		1																	336
	06			1			1		1		1		1	1														488
	08			1		1							1	1														183
#6 THHN /THWN	120 POWER HOT		1																								1	17
	120 POWER COMMON		1																								1	17
#8 BARE	BARE BOND GROUND		1	1	1	1	1	1	1	1	1	1	1	1													1	553
2/#8 XHHW COND ILLUMIN	STREET LIGHTS				1		2	1	1	1		1		1													4	688
#16 3 - COND IMSA CABLE	VIVDS CAMERAS			4	1		2	1	1	1		1		1		1	1			1		1	1		1	1		884
COAX CABLE	VIVDS CAMERAS			4	1		2	1	1	1		1		1		1	1			1		1	1		1	1		884

- (A) 60' MAST ARM WITH LUMINAIRE AND VIVDS CAMERAS.
- (B) 60' MAST ARM WITH LUMINAIRE, 2-PED SIGNALS, PUSH BUTTONS, AND VIVDS CAMERAS.
- (C) 60' MAST ARM WITH LUMINAIRE AND VIVDS CAMERAS.
- (D) 60' MAST ARM WITH LUMINAIRE AND VIVDS CAMERAS.
- (E) PED SIGNAL POLE W/ PUSH BUTTONS
- (F) PED SIGNAL POLE W/ PUSH BUTTONS
- (G) PED SIGNAL POLE W/ PUSH BUTTONS
- (H) NEW SERVICE PEDESTAL WITH METER
- (I) POWER SOURCE
- (J) TRAFFIC SIGNAL CONTROLLER

Bonnie Moss
OCTOBER 5, 2004

STATE OF TEXAS
BONNIE C. MOSS
93004
REGISTERED PROFESSIONAL ENGINEER

C.O. #9

NO.	REVISION	BY	DATE

CP&Y Chiang, Patel & Yerby, Inc.

© 2004

Texas Department of Transportation

SH 29 WEST

TRAFFIC SIGNAL LAYOUT
SH 29 / CR 265 WEST

		FED. ROAD DIV. NO.	STATE	FEDERAL AID PROJECT NO.			SHEET NO.
Designed:	AJW	6	TEXAS				60
Checked:	BCM	STATE DIST. NO.	COUNTY	CONTROL NO.	SECTION NO.	JOB NO.	HIGHWAY NO.
Drawn:	AJW	14	WILLIAMSON	0337	01	029	SH 29
Checked:							

j: \TXD0153-03\533Wt101.040 10/05/2004 10:36:42 AM

SH 29 [S1]

CR 265 WEST [S2]

LEFT TURN SIGNAL [S3]

R10-10

STREET SIGN NAME

SIGNS D3-1 TO BE PLACED ON MAST ARM AS SHOWN 10" SERIES D LETTERS

R Y G [1] [2] [5] [8] [9] [12] [13]

R Y G [3] [4] [6] [7] [10] [11] [14] [15]

HEAD LEGEND



SIGNAL FACES



R10-4b (L)



R10-4b (R)

PEDESTRIAN PUSHBUTTON SIGNS

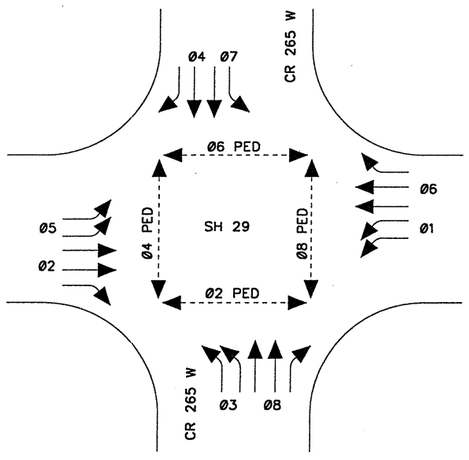

ORIENTATION VIEW

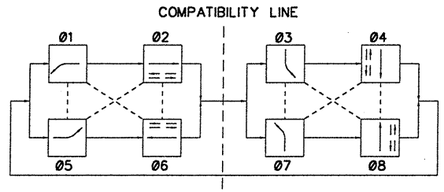

PHASING SEQUENCE

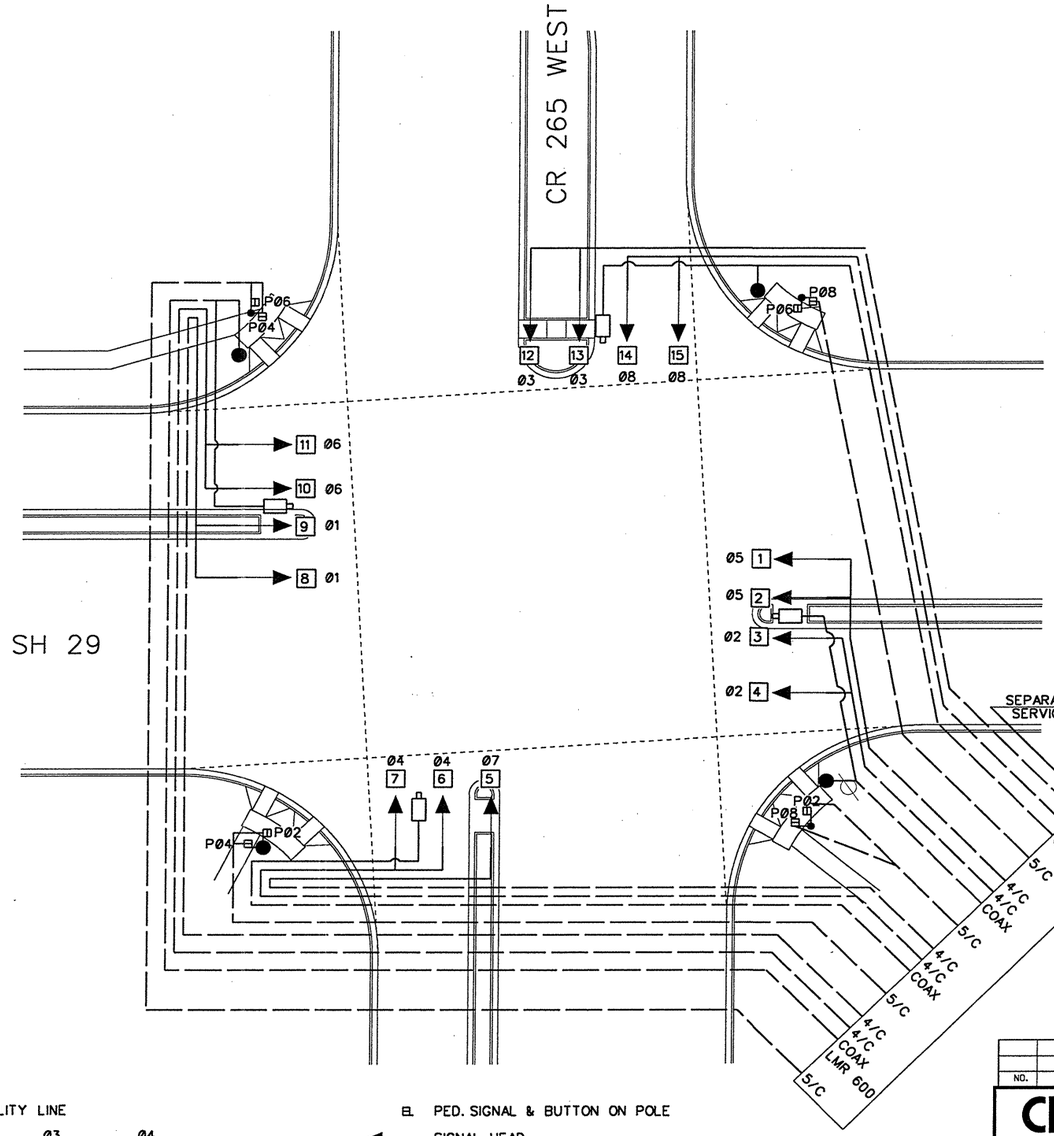

EL PED. SIGNAL & BUTTON ON POLE

SIGNAL HEAD

VIVDS CAMERA

WIRING IN CONDUIT

WIRING IN MAST ARM

WIRING LAYOUT

NOTE: ALL SIGNAL PLATES SHALL HAVE BACKPLATES. SIGNAL OPERATION WILL BE MONITORED AFTER CONSTRUCTION AND MODIFIED AS NECESSARY.

N

Bonnie Moss

STATE OF TEXAS
BONNIE C. MOSS
93004
REGISTERED
PROFESSIONAL ENGINEER

September 21, 2004

NO.	REVISION	BY	DATE

CP&Y Chiang, Patel & Yerby, Inc.

© 2004

Texas Department of Transportation

SH 29 WEST

PHASING & WIRING PLAN

SH 29 / CR 265 W

Designed:	AJW	FED. ROAD DIV. NO.	STATE	FEDERAL AID PROJECT NO.					SHEET NO.
Checked:	BCM	6	TEXAS						161
Drawn:		STATE DIST. NO.	COUNTY		CONTROL NO.	SECTION NO.	JOB NO.		HIGHWAY NO.
Checked:		14	WILLIAMSON		0337	01	029		SH 29

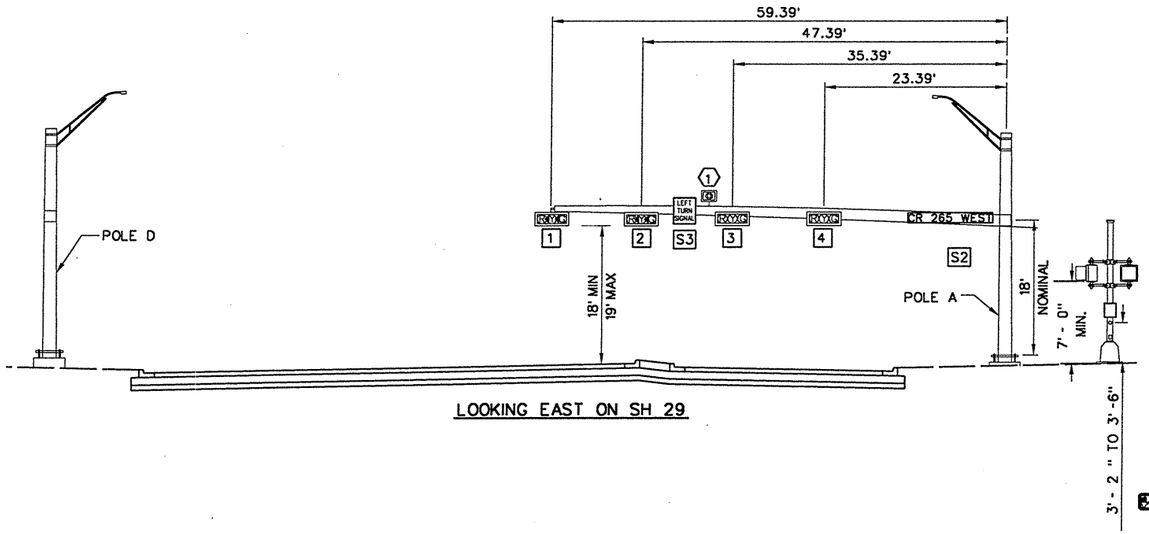

LOOKING EAST ON SH 29

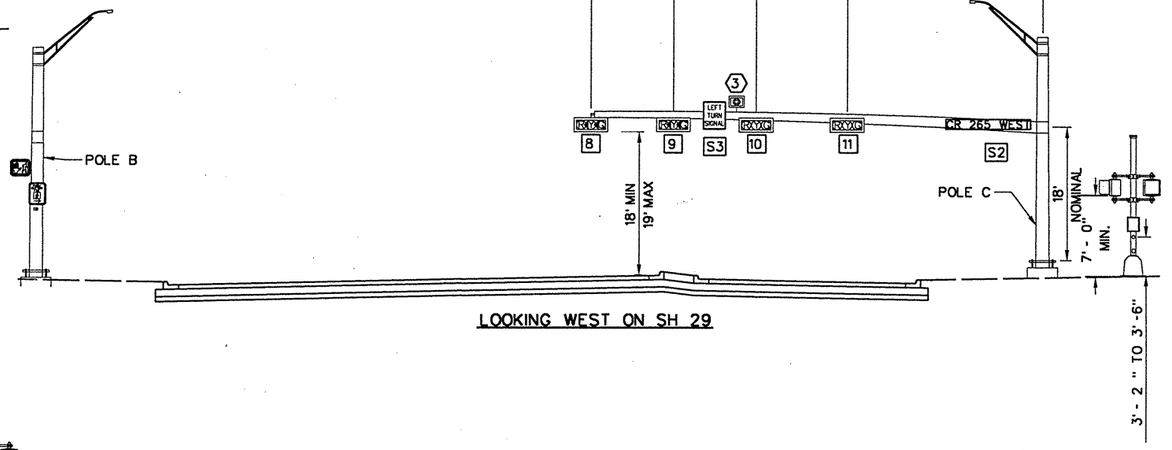

LOOKING WEST ON SH 29

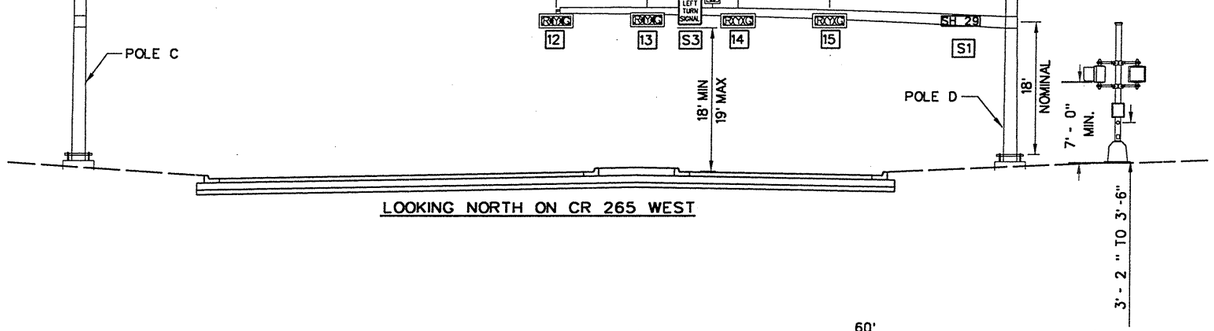

LOOKING NORTH ON CR 265 WEST

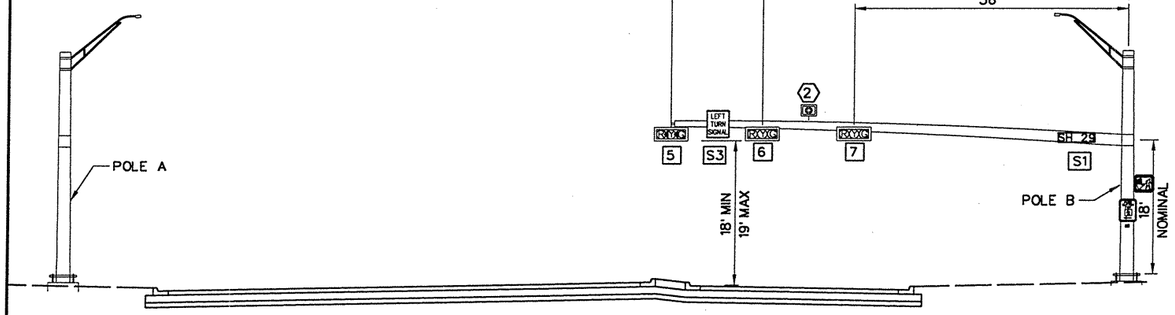

LOOKING SOUTH ON CR 265 WEST

NOTES:

1. DISTANCES ALONG MAST ARMS ARE APPROXIMATE.
2. FOUNDATIONS SHALL BE ADJUSTED IN THE FIELD IN ORDER TO MEET CLEARANCE.
3. LOCATION OF POLES IS APPROXIMATE. ANY CHANGES SHALL BE APPROVED BY THE ENGINEER.

Bonnie C. Moss

STATE OF TEXAS
BONNIE C. MOSS
93004
REGISTERED PROFESSIONAL ENGINEER

September 21, 2004

NO.	REVISION	BY	DATE

CP&Y Chiang, Patel & Yerby, Inc.

© 2004

Texas Department of Transportation

SH 29 WEST

TRAFFIC SIGNAL ELEVATIONS
SH 29 / CR 265 WEST

		FED. ROAD DIV. NO.	STATE	FEDERAL AID PROJECT NO.			SHEET NO.
Designed:	AJW	6	TEXAS				162
Checked:	BCM	STATE DIST. NO.	COUNTY	CONTROL NO.	SECTION NO.	JOB NO.	HIGHWAY NO.
Drawn:		14	WILLIAMSON	0337	01	029	SH 29
Checked:							

PHASE 1 - STEP 1

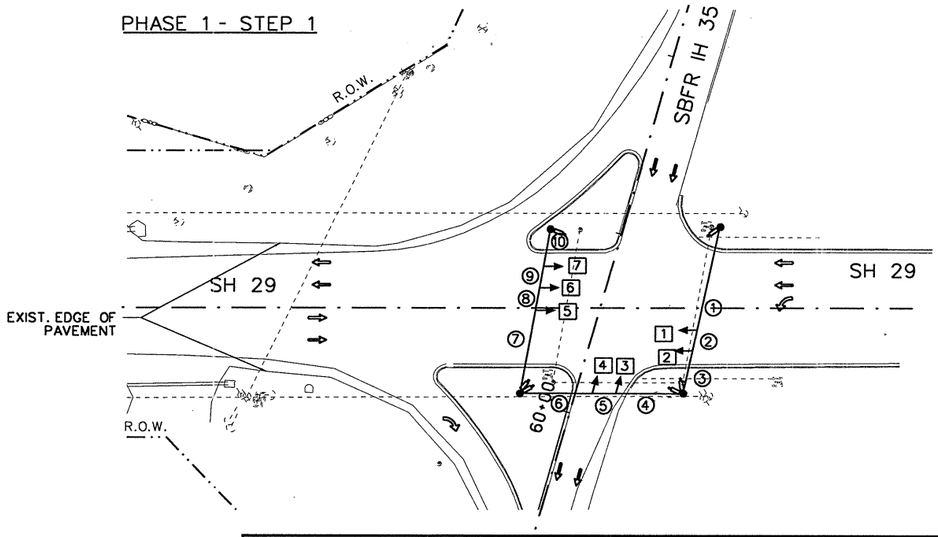

RUN & LENGTH (FT)										
RUN NO.	1	2	3	4	5	6	7	8	9	10
LENGTH	57	12	24	36	13	38	47	13	12	20
PHASE 1 - STEP 1										

PHASE 1 - STEP 2

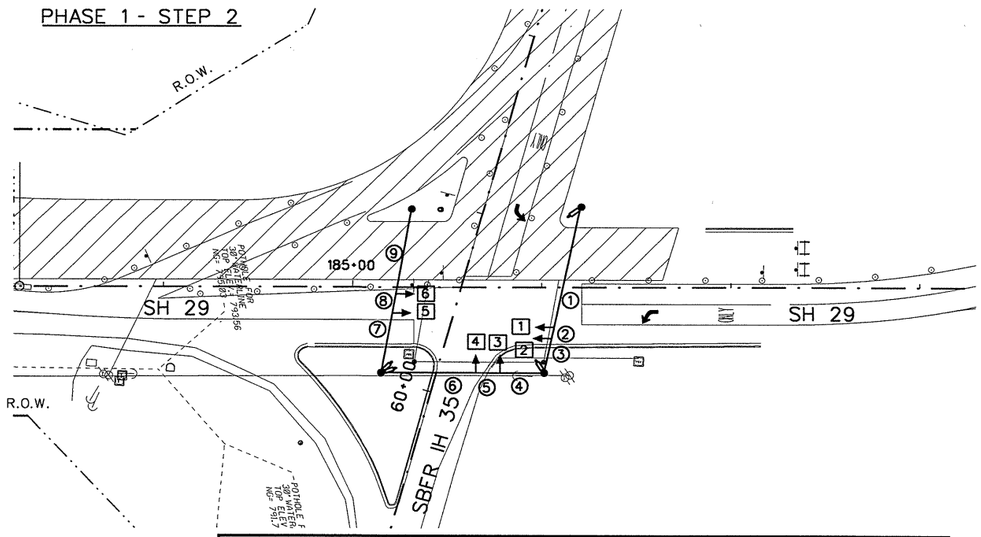

RUN & LENGTH (FT)									
RUN NO.	1	2	3	4	5	6	7	8	9
LENGTH	66	6	19	23	13	49	33	11	47
PHASE 1 - STEP 2									

SIGNAL HEAD PLACEMENT DURING CONSTRUCTION MAX. DISTANCE 4 CNDR.			
HEAD NO.	FT	HEAD NO.	FT
HEAD 1	55	HEAD 4	44
HEAD 2	49	HEAD 5	150
HEAD 3	38	HEAD 6	156
		HEAD 7	156

LEGEND

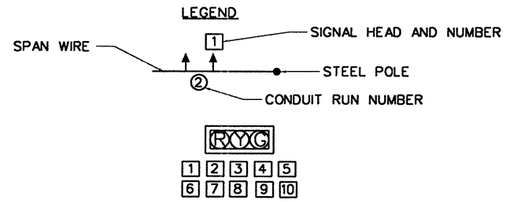

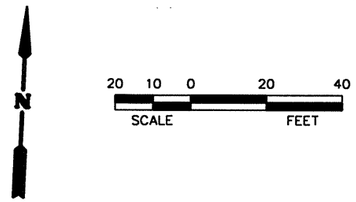

NOTES:

THE CONTRACTOR IS RESPONSIBLE FOR ADJUSTING SIGNAL HEADS TO THE SPECIFIC TRAFFIC PHASE UNDER CONSTRUCTION. THE WORK IS SUBSIDIARY TO ITEM 680.

PHASE 1 - STEP 3

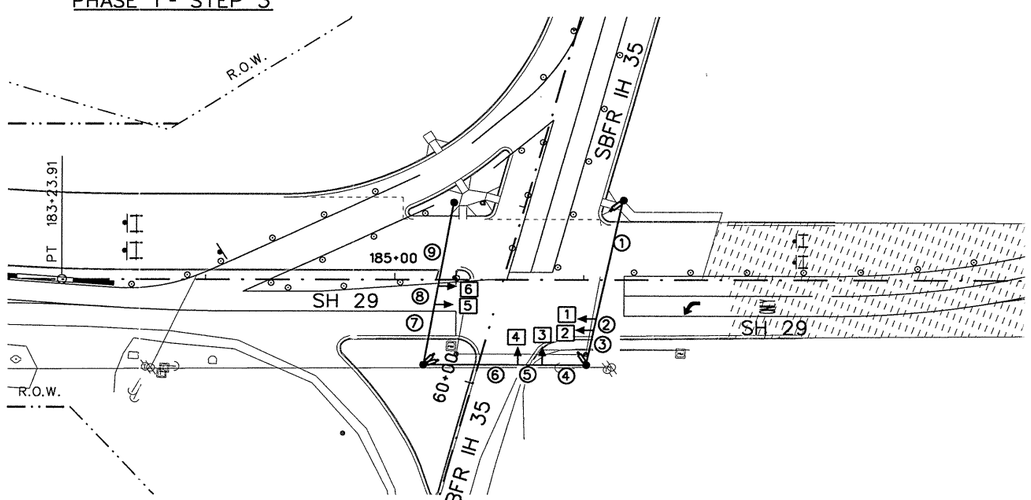

RUN & LENGTH (FT)									
RUN NO.	1	2	3	4	5	6	7	8	9
LENGTH	66	6	19	23	13	50	34	11	47
PHASE 1 - STEP 2									

PHASE 2 - STEP 1

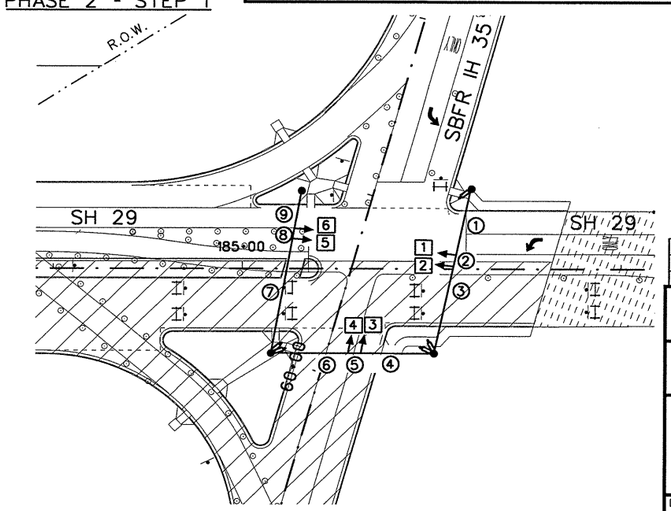

RUN & LENGTH (FT)									
RUN NO.	1	2	3	4	5	6	7	8	9
LENGTH	36	6	49	38	7	41	64	6	21
PHASE 2 - STEP 1									

Michael P. Meroney 9/21/04

STATE OF TEXAS
MICHAEL P. MERONEY
73535
REGISTERED
PROFESSIONAL ENGINEER

NO.	REVISION	BY	DATE

CP&Y Chiang, Patel & Yerby, Inc.

© 2004

Texas Department of Transportation

SH 29 WEST

TEMPORARY TRAFFIC SIGNAL LAYOUT

SH 29 / SBFR IH 35

		FED. ROAD DIV. NO.	STATE	FEDERAL AID PROJECT NO.				SHEET NO.
Designed:	AJW	6	TEXAS					163
Checked:	BCM	STATE DIST. NO.	COUNTY	CONTROL NO.	SECTION NO.	JOB NO.	HIGHWAY NO.	
Drawn:	AJW	14	WILLIAMSON	0337	01	029	SH 29	
Checked:								

j: \TXD0153-03\533WtF02.040 09/21/2004 11: 46: 12 AM

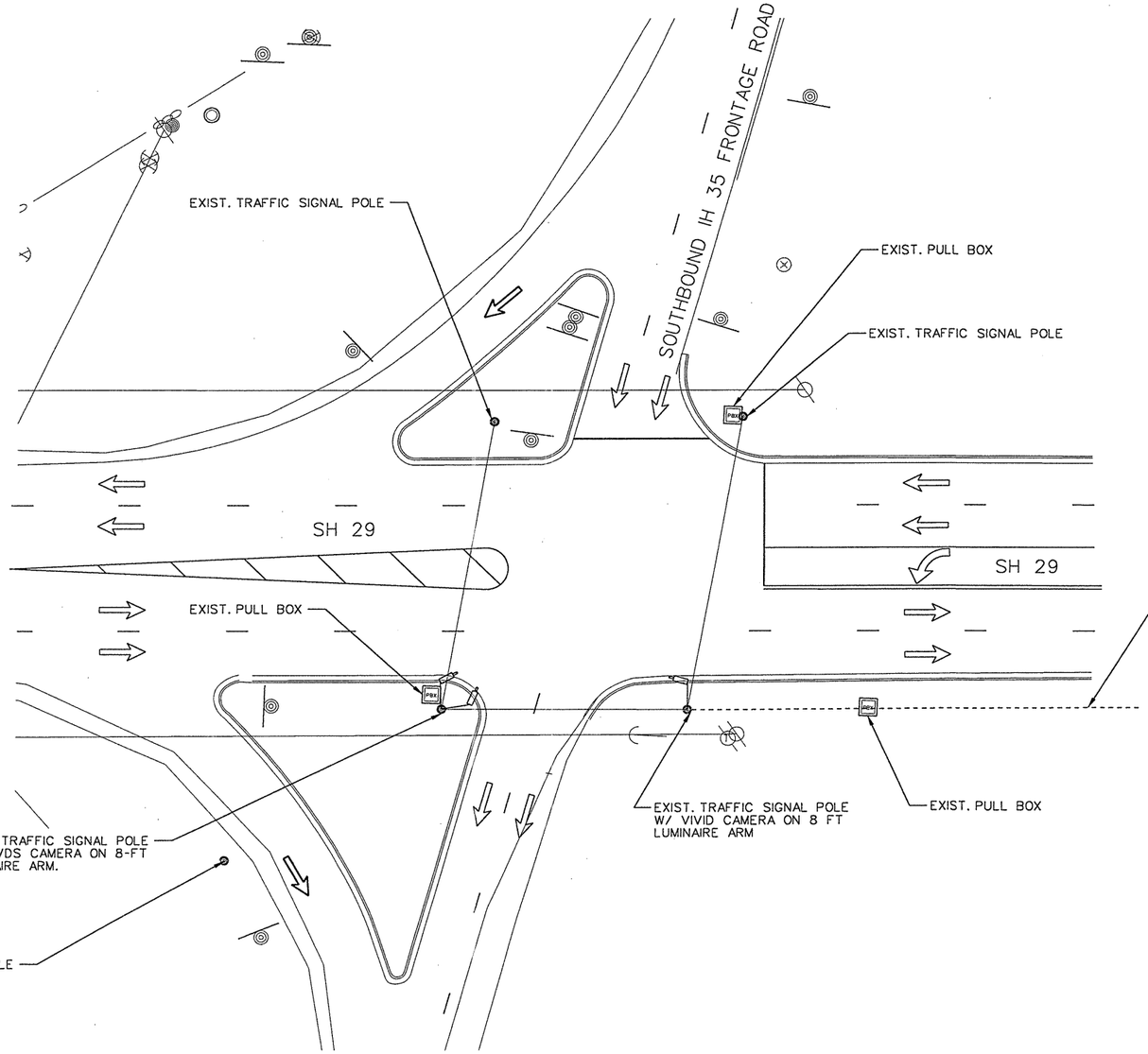

N

20 10 0 20 40
SCALE FEET

EXISTING VIVDS COAXIAL CABLE RAN THROUGH THE EXISTING 2-2" CONDUIT IN THE BRIDGE RAIL TO THE TRAFFIC SIGNAL CONTROLLER LOCATED AT SH 29/ NORTHBOUND IH 35 FRONTAGE ROAD.

** 2-2" PVC TO REMAIN AND EXISTING WIRING TO CONTROLLER TO BE REMOVED.

Bonnie Moss

STATE OF TEXAS
BONNIE C. MOSS
93004
REGISTERED
PROFESSIONAL ENGINEER

September 21, 2004

NO.	REVISION	BY	DATE

CP&Y Chiang, Patel & Yerby, Inc.

© 2004

Texas Department of Transportation

SH 29 WEST

EXISTING TRAFFIC SIGNAL LAYOUT
SH 29 / SBFR IH 35

		FED. ROAD DIV. NO.	STATE	FEDERAL AID PROJECT NO.				SHEET NO.
Designed:	AJW	6	TEXAS					164
Checked:	BCM	STATE DIST. NO.	COUNTY	CONTROL NO.	SECTION NO.	JOB NO.	HIGHWAY NO.	
Drawn:	AJW	14	WILLIAMSON	0337	01	029	SH 29	
Checked:								

ITEMS PROVIDED BY TXDOT

ESTIMATED QUANTITIES-SHEET TOTAL

EST	UNIT	DESCRIPTION
1	EA	TRAF SIG CNTRL
1	EA	40' MAST ARM POLE W/ LUM
1	EA	44' & 28' MAST ARM POLE W/ LUM
1	EA	35' LUMINAIRE POLE W/ 8' ARM
1	EA	R10-10 TURN SIGN
3	EA	R10-4b (L) SIGNS
3	EA	R10-4b (R) SIGNS
4	EA	VIVDS CAMERA BRACKET
1	EA	MONITOR FOR VIVDS CAMERA
1	EA	RADIO, LOCAL
1	EA	YAGI, ANTENNA
1	EA	VIVDS PROCESSOR SYSTEM
4	EA	VIVDS CAMERA

ITEMS PROVIDED BY CONTRACTOR

ESTIMATED QUANTITIES-SHEET TOTAL

EST	UNIT	DESCRIPTION
1	EA	RDWY ILL ASSEM (SPECIAL)
2	EA	SIGNAL POLE 250 WATT LUMINAIRE
134	LF	CONDUIT (PVC) (SCHD 40) (2 IN)
1422	LF	CONDUIT (PVC) (SCHD 40) (3 IN)
14	LF	CONDUIT (PVC) (SCHD 40) (4 IN)
246	LF	ELEC CONDUCTOR (NO. 6) INSULATED
16	LF	ELEC CONDUCTOR (NO. 6) BARE
409	LF	ELEC CONDUCTOR (NO. 8) BARE
371	LF	ELEC CONDUCTOR (NO. 8) INSULATED *
5	EA	GROUND BOX TY A (122311) W/ APRON
1	EA	GROUND BOX TY C (162911) W/ APRON
1	EA	ELEC SERV TY D (120/240)100(NS)AL(E)PS(U)
2.22	CY	TRAF SIG CNTRL FND
27	LF	FND FOR TRAF SIG (TY A) (36 IN DRIL SHFT)
18	LF	FND FOR TRAF SIG (TY A) (24 IN DRIL SHFT)
1	EA	INSTAL OF HWY TRAF SIG (ISOLATED)
23	EA	VEH SIG SEC (12 IN) W/O LENS & REFL
6	EA	PED SIG SEC (2 INDICATIONS IN 1 SEC)
21	EA	BACK PLATE (3 SEC) (12 IN)
1	LF	BACK PLATE (5 SEC) (12 IN)
686	LF	TRAF SIG CBL (TY A) (4 CONDR) (14 AWG) **
795	LF	TRAF SIG CBL (TY A) (5 CONDR) (14 AWG) **
279	EA	TRAF SIG CBL (TY A) (7 CONDR) (14 AWG) **
2	EA	TRAF SIG POLE (STL) MAS (INSTAL)
6	EA	PED DETECT (PUSH BTN)
7	EA	12 IN LED TRF SIGNAL LAMP (RED BALL)
5	EA	12 IN LED TRF SIGNAL LAMP (YELLOW BALL)
5	EA	12 IN LED TRF SIGNAL LAMP (GREEN BALL)
2	EA	12 IN LED TRF SIGNAL LAMP (YEL ARW)
2	EA	12 IN LED TRF SIGNAL LAMP (GRN ARW)
100	LF	LMR 600 RADIO CABLE
2578	LF	VIVDS COMMUNICATION CABLE (COAXIAL) ***
2578	LF	VIVDS POWER CABLE (3 CONDR) (16 AWG) ***
1	EA	SALV TRAF SIGNALS

ELECTRICAL SERVICE DATA

SERVICE POLE NO	SERVICE POLE DESCRIPTION (SEE ED (3) - 98)	SERVICE CONDUIT SIZE	SERVICE CONDUCTORS NO/SIZE	SAFETY SWITCH AMPS	MAIN DISCONNECT		TWO-POLE CONTACTOR AMPS	PANELBOARD/ LOADCENTER AMP RATING	CIRCUIT NO	BRANCH CKT. BKR. POLE/AMPS	CIRCUIT AMP LOAD	SERVICE KVA LOAD
					SWITCH AMP/FUSE	CKT. BKR. POLE/AMP						
POLE G	TY D (120/240) 100(NS) AL(E) PS(U)	3"	3/#2	NA	NA	2P/100	20	100	T.S.	1P/50	<20	<7.1
									LIGHTING	2P/20	3	
									CAMERA	1P/20	4	

(A) 44' & 28' DUAL MAST ARM WITH LUMINAIRE, 1-PED SIGNAL, PUSH BUTTON, AND VIVDS CAMERAS.

(B) NEW PEDESTRIAN POLE WITH 2-PED SIGNALS, PUSH BUTTONS.

(C) 40' MAST ARM WITH LUMINAIRE, 2-PED SIGNALS, PUSH BUTTONS, AND VIVDS CAMERAS.

(D) NEW PEDESTRIAN POLE WITH 1-PED SIGNAL AND PUSH BUTTON.

(E) NEW SERVICE PEDESTAL WITH METER.

(F) POWER SOURCE.

(G) TRAFFIC SIGNAL CONTROLLER.

(H) 35' ILLUMINATION POLE W/ 8' MAST ARM AND VIVD CAMERA.

SIGNING

- S1 SH 29 (D3-1)
- S3 LEFT TURN SIGNAL R10-10
- S4 IH 35 SOUTH (D3-1)
- S5 ONE-WAY (R6-1L)
- S6 ONE-WAY (R6-1R)

SIGNAL POLE LOCATION

POLE NUMBER	NORTH	EAST	STATION	OFFSET
POLE A	10, 205, 051.58	3, 127, 546.04	185+87.57	44.47 RT
POLE B	10, 205, 045.11	3, 127, 477.40	185+18.71	49.12 RT
POLE C	10, 205, 134.82	3, 127, 500.89	185+45.87	39.55 LT
POLE D	10, 205, 141.48	3, 127, 575.83	186+20.37	43.17 LT
POLE E	10, 204, 975.94	3, 127, 405.73	184+44.27	115.21 RT
POLE F	10, 204, 980.76	3, 127, 406.45	184+45.19	110.51 RT
CONTROLLER (G)	10, 204, 980.93	3, 127, 421.66	184+60.39	110.96 RT
POLE H	10, 205, 306.18	3, 127, 610.56	186+62.47	206.28 LT

* STATION AND OFFSETS BASED ON ℄ SH 29

NOTE:
1. SALVAGE ALL EXISTING TRAFFIC SIGNAL POLES.
2. ILLUMINATION WIRES ARE TO BE RAN IN A SEPARATE CONDUIT APART FROM THE SIGNAL CONDUCTORS IN THE BORED SECTIONS.

* FOR CONTRACTOR'S INFORMATION ONLY.
** QUANTITY INCLUDES 18 LF OF POLE HEIGHT PER CABLE.
*** QUANTITY INCLUDES 30 LF OF POLE HEIGHT PER CABLE.

CONDUIT AND CONDUCTOR SCHEDULE

	RUN NUMBER	1	2	3	4	5	6	7	8	9	10	11	12	13	14	15	16	17	18	19	20	21	TOTAL
	RUN LENGTH	5	16	7	8	80	11	99	14	6	99	7	36	6	38	8	8	38	165	6	59	69	LENGTH
	CONDUIT SIZE		2"	2-4"	3"	3-3"	3"	3-3"	3"	3"	3-3"	MAST ARM							2-3"	2-3"	2-2"	3-3"	
AWG	CIRCUIT																						
#14 4 - COND IMSA CABLE	SIGNALS Ø2			1	1	1						1	1									1	207
	Ø4			1	1	1								1	1							1	208
	Ø6			1				1	1								1	1				1	235
#14 7 - COND IMSA CABLE	SIGNALS Ø1			1				1	1							1	1	1				1	243
#14 5 - COND IMSA CABLE	PED SIGNAL & Ø2			1	1	1	1															1	175
	BUTTONS Ø4			1			1	1	1													1	200
	Ø6			1	1	1		1	1	1	1											1	382
#6 THHN /THWN	120 POWER HOT	1																					16
	120 POWER COMMON	1																	1	1	1		246
#8 BARE	BARE BOND GROUND		1	1	1	1	1	1	1	1	1											1	409
2/#8 XHHW COND ILLUMIN	STREET LIGHTS		2		1	1		1	1													2	371
#16 3 - COND IMSA CABLE	VIVDS CAMERAS			4	2	3		1	1		1		1		1			1	1	1	1	4	1114
COAX CABLE	VIVDS CAMERAS			4	2	3		1	1		1		1		1			1	1	1	1	4	1114

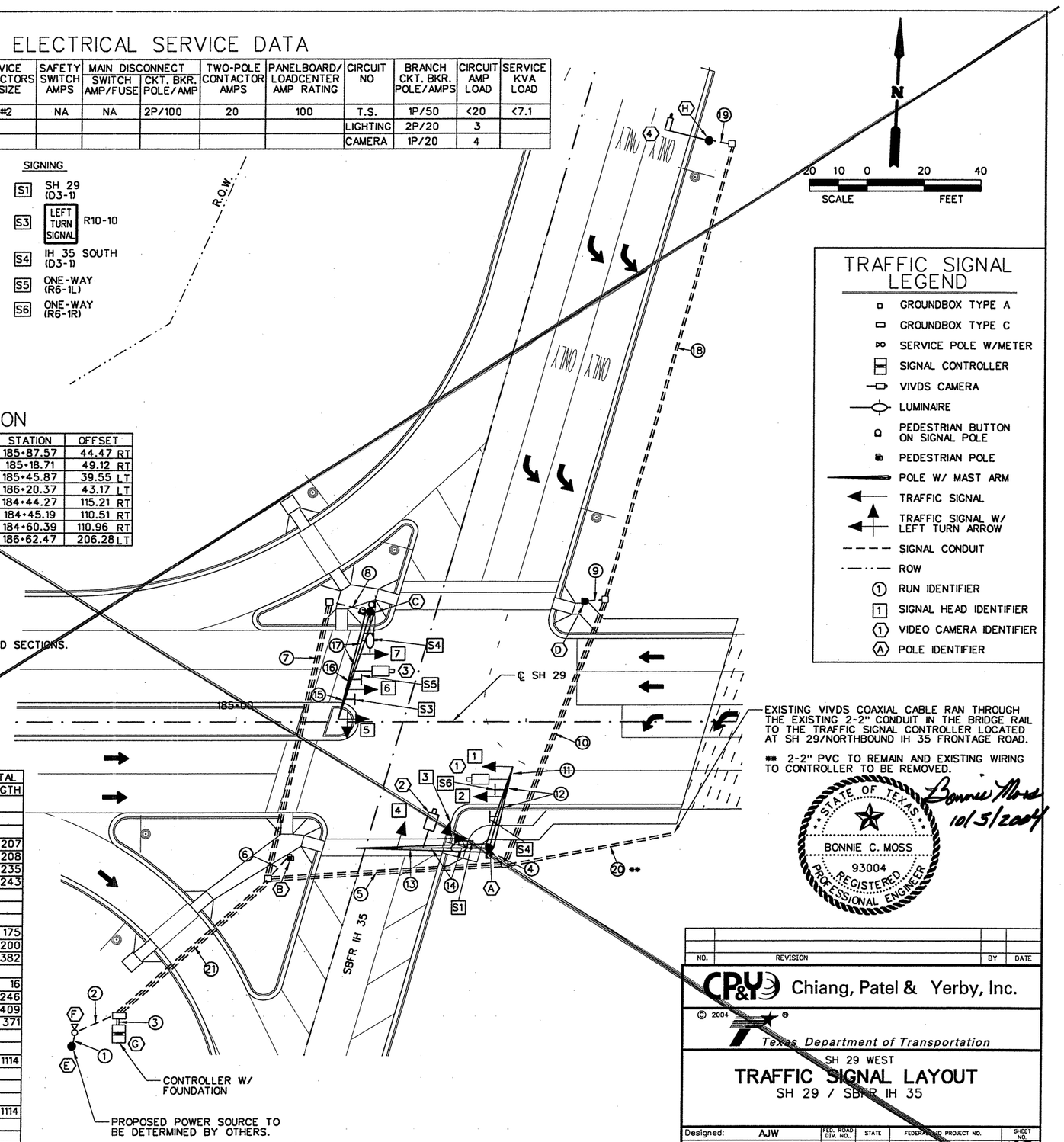

TRAFFIC SIGNAL LEGEND

- GROUNDBOX TYPE A
- GROUNDBOX TYPE C
- SERVICE POLE W/METER
- SIGNAL CONTROLLER
- VIVDS CAMERA
- LUMINAIRE
- PEDESTRIAN BUTTON ON SIGNAL POLE
- PEDESTRIAN POLE
- POLE W/ MAST ARM
- TRAFFIC SIGNAL
- TRAFFIC SIGNAL W/ LEFT TURN ARROW
- SIGNAL CONDUIT
- ROW
- (1) RUN IDENTIFIER
- [1] SIGNAL HEAD IDENTIFIER
- (1) VIDEO CAMERA IDENTIFIER
- (A) POLE IDENTIFIER

EXISTING VIVDS COAXIAL CABLE RAN THROUGH THE EXISTING 2-2" CONDUIT IN THE BRIDGE RAIL TO THE TRAFFIC SIGNAL CONTROLLER LOCATED AT SH 29/NORTHBOUND IH 35 FRONTAGE ROAD.

** 2-2" PVC TO REMAIN AND EXISTING WIRING TO CONTROLLER TO BE REMOVED.

STATE OF TEXAS
BONNIE C. MOSS
93004
REGISTERED PROFESSIONAL ENGINEER
Bonnie Moss 10/5/2004

NO.	REVISION	BY	DATE

CP&Y Chiang, Patel & Yerby, Inc.

© 2004

Texas Department of Transportation

SH 29 WEST

TRAFFIC SIGNAL LAYOUT

SH 29 / SBFR IH 35

		FED. ROAD DIV. NO.	STATE	FEDERAL AID PROJECT NO.				SHEET NO.
Designed:	AJW	6	TEXAS					65
Checked:	BCM	STATE DIST. NO.	COUNTY	CONTROL NO.	SECT NO.	JOB NO.	HIGHWAY NO.	
Drawn:	AJW	14	WILLIAMSON	0337	01	029	SH 29	
Checked:								

j:\TXD0153-03\533Wt102.040 10/05/2004 10:35:22 AM

ITEMS PROVIDED BY TXDOT

ESTIMATED QUANTITIES-SHEET TOTAL

EST	UNIT	DESCRIPTION
1	EA	TRAF SIG CNTRL
1	EA	40' MAST ARM POLE W/ LUM
1	EA	44' & 28' MAST ARM POLE W/ LUM
1	EA	35' LUMINAIRE POLE W/ 8' ARM
1	EA	R10-10 TURN SIGN
3	EA	R10-4b (L) SIGNS
3	EA	R10-4b (R) SIGNS
4	EA	VIVDS CAMERA BRACKET
1	EA	MONITOR FOR VIVDS CAMERA
1	EA	RADIO, LOCAL
1	EA	YAGI, ANTENNA
1	EA	VIVDS PROCESSOR SYSTEM
4	EA	VIVDS CAMERA

ITEMS PROVIDED BY CONTRACTOR

ESTIMATED QUANTITIES-SHEET TOTAL

EST	UNIT	DESCRIPTION
1	EA	RDWY ILL ASSEM (SPECIAL)
2	EA	SIGNAL POLE 250 WATT LUMINAIRE
134	LF	CONDUIT (PVC) (SCHD 40) (2 IN)
1422	LF	CONDUIT (PVC) (SCHD 40) (3 IN)
14	LF	CONDUIT (PVC) (SCHD 40) (4 IN)
246	LF	ELEC CONDUCTOR (NO. 6) INSULATED
16	LF	ELEC CONDUCTOR (NO. 6) BARE
409	LF	ELEC CONDUCTOR (NO. 8) BARE
371	LF	ELEC CONDUCTOR (NO. 8) INSULATED *
5	EA	GROUND BOX TY A (122311) W/ APRON
1	EA	GROUND BOX TY C (162911) W/ APRON
1	EA	ELEC SERV TY D (120/240)100(NS)AL(E)PS(U)
2.22	CY	TRAF SIG CNTRL FND
27	LF	FND FOR TRAF SIG (TY A) (36 IN DRIL SHFT)
18	LF	FND FOR TRAF SIG (TY A) (24 IN DRIL SHFT)
1	EA	INSTAL OF HWY TRAF SIG (ISOLATED)
23	EA	VEH SIG SEC (12 IN) W/O LENS & REFL
6	EA	PED SIG SEC (2 INDICATIONS IN 1 SEC)
21	EA	BACK PLATE (3 SEC) (12 IN)
1	LF	BACK PLATE (5 SEC) (12 IN)
686	LF	TRAF SIG CBL (TY A) (4 CONDR) (14 AWG) **
795	LF	TRAF SIG CBL (TY A) (5 CONDR) (14 AWG) **
279	EA	TRAF SIG CBL (TY A) (7 CONDR) (14 AWG) **
2	EA	TRAF SIG POLE (STL) MAS (INSTAL)
6	EA	PED DETECT (PUSH BTN)
7	EA	12 IN LED TRF SIGNAL LAMP (RED BALL)
5	EA	12 IN LED TRF SIGNAL LAMP (YELLOW BALL)
5	EA	12 IN LED TRF SIGNAL LAMP (GREEN BALL)
2	EA	12 IN LED TRF SIGNAL LAMP (YEL ARW)
2	EA	12 IN LED TRF SIGNAL LAMP (GRN ARW)
100	LF	LMR 600 RADIO CABLE
2578	LF	VIVDS COMMUNICATION CABLE (COAXIAL) ***
2578	LF	VIVDS POWER CABLE (3 CONDR) (16 AWG) ***
1	EA	SALV TRAF SIGNALS

ELECTRICAL SERVICE DATA

SERVICE POLE NO	SERVICE POLE DESCRIPTION (SEE ED (3) - 98)	SERVICE CONDUIT SIZE	SERVICE CONDUCTORS NO/SIZE	SAFETY SWITCH AMPS	MAIN DISCONNECT SWITCH AMP/FUSE	MAIN DISCONNECT CKT. BKR. POLE/AMP	TWO-POLE CONTACTOR AMPS	PANELBOARD/ LOADCENTER AMP RATING	CIRCUIT NO	BRANCH CKT. BKR. POLE/AMPS	CIRCUIT AMP LOAD	SERVICE KVA LOAD
POLE G	TY D (120/240) 100(NS) AL(E) PS(U)	3"	3/#2	NA	NA	2P/100	20	100	T.S.	1P/50	<20	<7.1
									LIGHTING	2P/20	3	
									CAMERA	1P/20	4	

Ⓐ 44' & 28' DUAL MAST ARM WITH LUMINAIRE, 1-PED SIGNAL, PUSH BUTTON, AND VIVDS CAMERAS.

Ⓑ NEW PEDESTRIAN POLE WITH 2-PED SIGNALS, PUSH BUTTONS.

Ⓒ 40' MAST ARM WITH LUMINAIRE, 2-PED SIGNALS, PUSH BUTTONS, AND VIVDS CAMERAS.

Ⓓ NEW PEDESTRIAN POLE WITH 1-PED SIGNAL AND PUSH BUTTON.

Ⓔ NEW SERVICE PEDESTAL WITH METER.

Ⓕ POWER SOURCE.

Ⓖ TRAFFIC SIGNAL CONTROLLER.

Ⓗ 35' ILLUMINATION POLE W/ 8' MAST ARM AND VIVD CAMERA.

SIGNING

- S1 SH 29 (D3-1)
- S3 LEFT TURN SIGNAL R10-10
- S4 IH 35 SOUTH (D3-1)
- S5 ONE-WAY (R6-1L)
- S6 ONE-WAY (R6-1R)

SIGNAL POLE LOCATION

POLE NUMBER	NORTH	EAST	STATION	OFFSET
POLE A	10, 205, 051.58	3, 127, 546.04	185+87.57	44.47 RT
POLE B	10, 205, 045.11	3, 127, 477.40	185+18.71	49.12 RT
POLE C	10, 205, 134.82	3, 127, 500.89	185+45.87	39.55 LT
POLE D	10, 205, 141.48	3, 127, 575.83	186+20.37	43.17 LT
POLE E	10, 204, 975.94	3, 127, 405.73	184+44.27	115.21 RT
POLE F	10, 204, 980.76	3, 127, 406.45	184+45.19	110.51 RT
CONTROLLER (G)	10, 204, 980.93	3, 127, 421.66	184+60.39	110.96 RT
POLE H	10, 205, 306.18	3, 127, 610.56	186+62.47	206.28 LT

* STATION AND OFFSETS BASED ON ℄ SH 29

NOTE:
1. SALVAGE ALL EXISTING TRAFFIC SIGNAL POLES.
2. ILLUMINATION WIRES ARE TO BE RAN IN A SEPARATE CONDUIT APART FROM THE SIGNAL CONDUCTORS IN THE BORED SECTIONS.

* FOR CONTRACTOR'S INFORMATION ONLY.
** QUANTITY INCLUDES 18 LF OF POLE HEIGHT PER CABLE.
*** QUANTITY INCLUDES 30 LF OF POLE HEIGHT PER CABLE.

CONDUIT AND CONDUCTOR SCHEDULE

	RUN NUMBER	1	2	3	4	5	6	7	8	9	10	11	12	13	14	15	16	17	18	19	20	21	TOTAL
	RUN LENGTH	5	16	7	8	80	11	99	14	6	99	7	36	6	38	8	8	38	165	6	59	69	LENGTH
	CONDUIT SIZE		2"	2-4"	3"	3-3"	3"	3-3"	3"	3"	3-3"	MAST ARM							2-3"	2-3"	2-2"	3-3"	
AWG	CIRCUIT																						
#14 4 - COND IMSA CABLE	SIGNALS Ø2			1	1	1						1	1									1	207
	Ø4			1	1	1								1	1							1	208
	Ø6			1				1	1								1	1				1	235
#14 7 - COND IMSA CABLE	SIGNALS Ø1			1				1	1							1	1	1				1	243
#14 5 - COND IMSA CABLE	PED SIGNAL & BUTTONS Ø2			1	1	1	1															1	175
	Ø4			1			1	1	1													1	200
	Ø6			1	1	1		1	1	1	1											1	382
#6 THHN /THWN	120 POWER HOT	1																	1	1	1		16
#8 BARE	120 POWER COMMON	1																	1	1	1		246
2/#8 XHHW COND ILLUMIN	BARE BOND GROUND	1		1	1	1	1	1	1	1	1											1	409
	STREET LIGHTS	2			1	1		1	1													2	371
#16 3 - COND IMSA CABLE	VIVDS CAMERAS			4	2	3		1	1		1		1			1		1	1	1	1	4	1114
COAX CABLE	VIVDS CAMERAS			4	2	3		1	1		1		1			1		1	1	1	1	4	1114

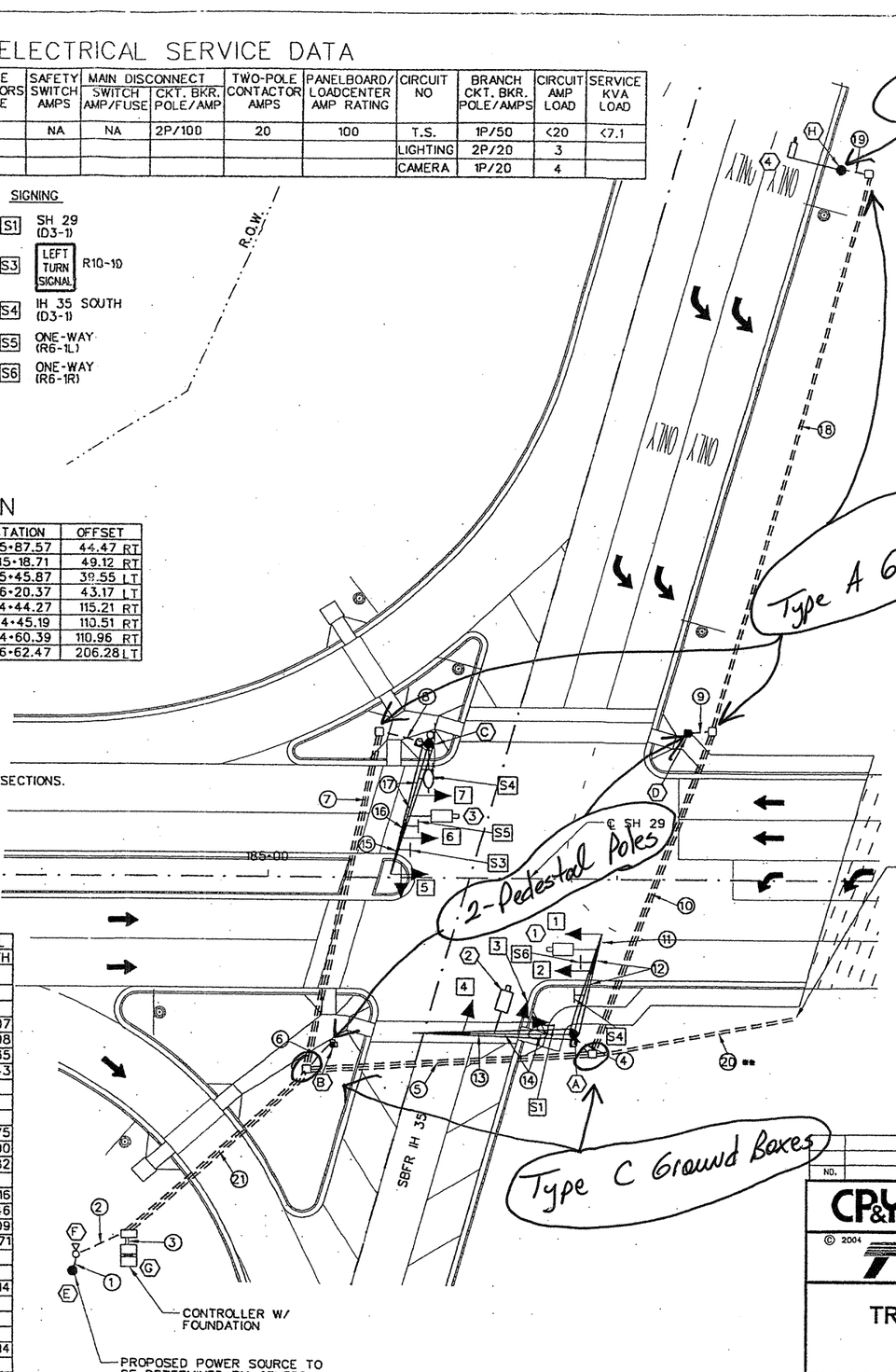

TRAFFIC SIGNAL LEGEND

- GROUNDBOX TYPE A
- GROUNDBOX TYPE C
- SERVICE POLE W/METER
- SIGNAL CONTROLLER
- VIVDS CAMERA
- LUMINAIRE
- PEDESTRIAN BUTTON ON SIGNAL POLE
- PEDESTRIAN POLE
- POLE W/ MAST ARM
- TRAFFIC SIGNAL
- TRAFFIC SIGNAL W/ LEFT TURN ARROW
- SIGNAL CONDUIT
- ROW
- (1) RUN IDENTIFIER
- [1] SIGNAL HEAD IDENTIFIER
- (1) VIDEO CAMERA IDENTIFIER
- (A) POLE IDENTIFIER

EXISTING VIVDS COAXIAL CABLE RAN THROUGH THE EXISTING 2-2" CONDUIT IN THE BRIDGE RAIL TO THE TRAFFIC SIGNAL CONTROLLER LOCATED AT SH 29/NORTHBOUND IH 35 FRONTAGE ROAD.

** 2-2" PVC TO REMAIN AND EXISTING WIRING TO CONTROLLER TO BE REMOVED.

STATE OF TEXAS
BONNIE C. MOSS
93004
REGISTERED PROFESSIONAL ENGINEER
Bonnie Moss 10/5/2004

C.O. #9

NO.	REVISION	BY	DATE

CP&Y Chiang, Patel & Yerby, Inc.

© 2004

Texas Department of Transportation

SH 29 WEST

TRAFFIC SIGNAL LAYOUT

SH 29 / SBFR IH 35

		FED. ROAD DIV. NO.	STATE	FEDERAL AID PROJECT NO.				SHEET NO.
Designed:	AJW	6	TEXAS					165
Checked:	BCM	STATE DIST. NO.	COUNTY	CONTROL NO.	SECTION NO.	JOB NO.	HIGHWAY NO.	
Drawn:	AJW	14	WILLIAMSON	0337	01	029	SH 29	
Checked:								

j:\TXD0153-03\533Wt102.040 10/05/2004 10:35:22 AM

IH 35 SB | SH 29

STREET SIGN NAME

SIGNS D3-1 TO BE PLACED
ON MAST ARM AS SHOWN
10" SERIES D LETTERS



SIGNAL FACES

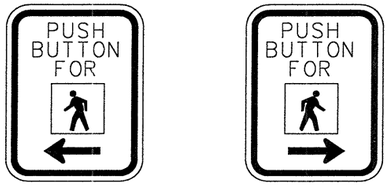

R10-4b (L) R10-4b (R)

PEDESTRIAN PUSHBUTTON SIGNS

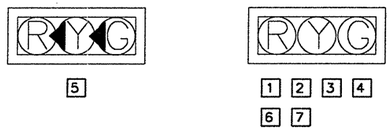

HEAD LEGEND

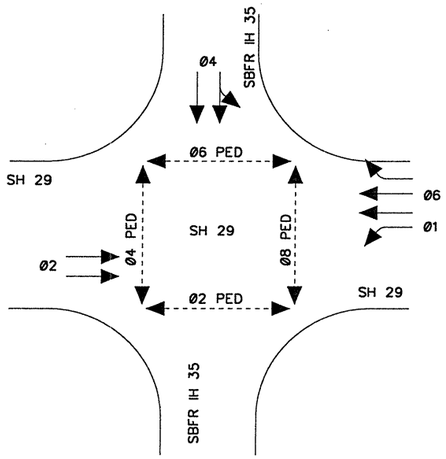

ORIENTATION VIEW

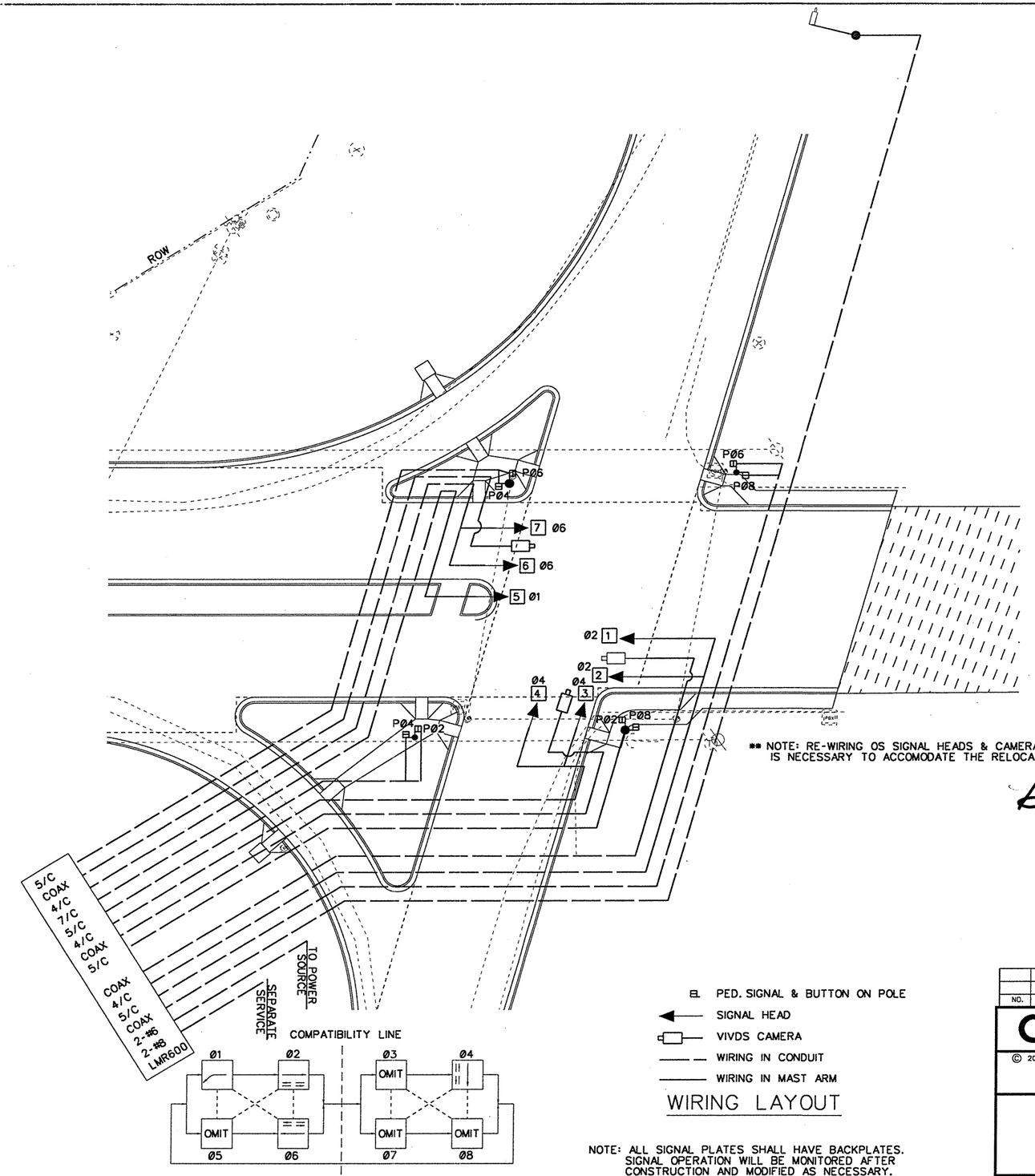

PHASING SEQUENCE

** NOTE: RE-WIRING OS SIGNAL HEADS & CAMERA FOR IH-35 NORTHBOUND FRONTAGE ROAD/SH 29 IS NECESSARY TO ACCOMODATE THE RELOCATION OF THE CONTROLLER.

EL PED. SIGNAL & BUTTON ON POLE
SIGNAL HEAD
VIVDS CAMERA
WIRING IN CONDUIT
WIRING IN MAST ARM

WIRING LAYOUT

NOTE: ALL SIGNAL PLATES SHALL HAVE BACKPLATES. SIGNAL OPERATION WILL BE MONITORED AFTER CONSTRUCTION AND MODIFIED AS NECESSARY.

Bonnie Moss

STATE OF TEXAS
BONNIE C. MOSS
93004
REGISTERED
PROFESSIONAL ENGINEER

September 21, 2004

NO.	REVISION	BY	DATE

CP&Y Chiang, Patel & Yerby, Inc.

© 2004

Texas Department of Transportation

SH 29 WEST

PHASING & WIRING PLAN

SH 29 / SBFR IH 35

		FED. ROAD DIV. NO.	STATE	FEDERAL AID PROJECT NO.			SHEET NO.
Designed:	AJW	6	TEXAS				166
Checked:	BCM	STATE DIST. NO.	COUNTY	CONTROL NO.	SECTION NO.	JOB NO.	HIGHWAY NO.
Drawn:		14	WILLIAMSON	0337	01	029	SH 29
Checked:							

j:\TXD0153-03\533Wtd02.999 09/20/2004 04:56:46 PM

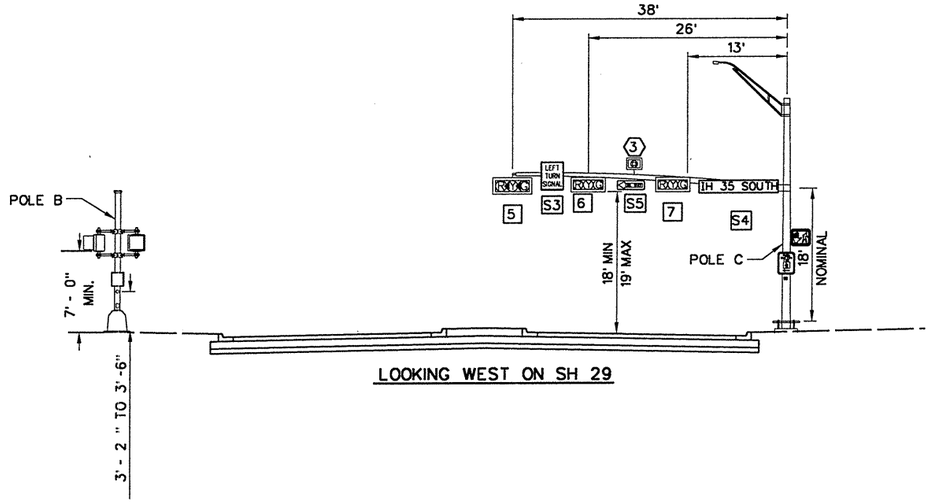

LOOKING WEST ON SH 29

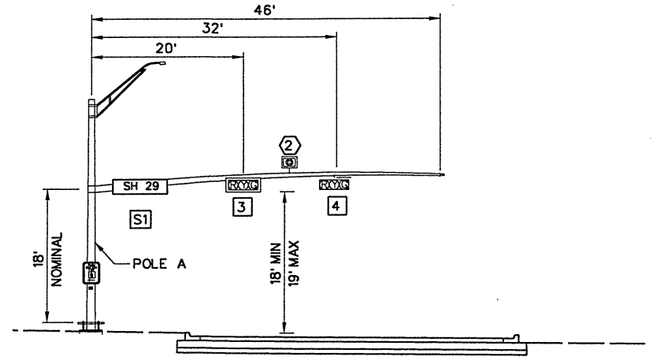

LOOKING SOUTH ON SBFR IH 35

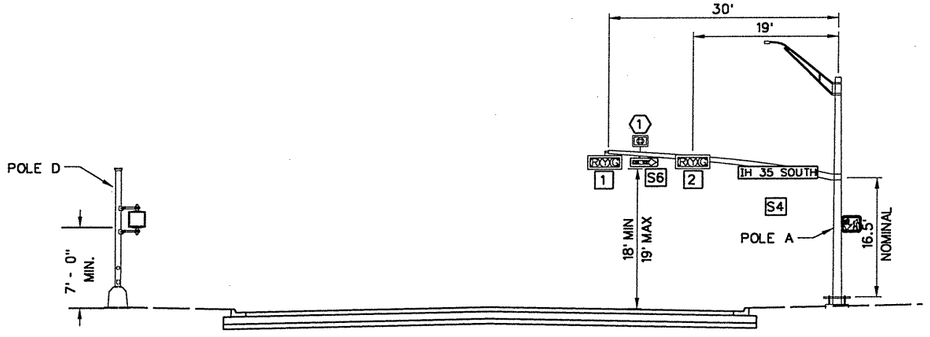

LOOKING EAST ON SH 29

NOTES:

1. DISTANCES ALONG MAST ARMS ARE APPROXIMATE.
2. FOUNDATIONS SHALL BE ADJUSTED IN THE FIELD IN ORDER TO MEET CLEARANCE.
3. LOCATION OF POLES IS APPROXIMATE. ANY CHANGES SHALL BE APPROVED BY THE ENGINEER.

Bonnie Moss

STATE OF TEXAS
BONNIE C. MOSS
93004
REGISTERED
PROFESSIONAL ENGINEER

September 21, 2004

NO.	REVISION	BY	DATE

CP&Y Chiang, Patel & Yerby, Inc.

© 2004

Texas Department of Transportation

SH 29 WEST

TRAFFIC SIGNAL ELEVATIONS
SH 29 / SBFR IH 35

		FED. ROAD DIV. NO.	STATE	FEDERAL AID PROJECT NO.			SHEET NO.
Designed:	AJW	6	TEXAS				167
Checked:	BCM	STATE DIST. NO.	COUNTY	CONTROL NO.	SECTION NO.	JOB NO.	HIGHWAY NO.
Drawn:		14	WILLIAMSON	0337	01	029	SH 29
Checked:							

FOUNDATION DESIGN TABLE

FDN TYPE	DRILLED SHAFT DIA	REINFORCING STEEL		DRILLED SHAFT LENGTH-ft ④, ⑤, ⑥			ANCHOR BOLT DESIGN ①				FOUNDATION DESIGN LOAD ②		TYPICAL APPLICATION
		VERT BARS	SPIRAL & PITCH	TEXAS CONE PENETROMETER N blows/ft			ANCHOR BOLT DIA	Fy (ksi)	BOLT CIR DIA	ANCHOR TYPE	MOMENT K-ft	SHEAR Kips	
				10	15	40							
24-A	24"	4- #5	#2 at 12"	5.7	5.3	4.5	¾"	36	12 ¾"	1	10	1	Pedestal pole, pedestal mounted controller.
30-A	30"	8- #9	#3 at 6"	11.3	10.3	8.0	1 ½"	55	17"	2	87	3	Mast arm assembly. (see Selection Table)
36-A	36"	10- #9	#3 at 6"	13.2	12.0	9.4	1 ¾"	55	19"	2	131	5	Mast arm assembly. (see Selection Table) 30' strain pole with or without luminaire.
36-B	36"	12- #9	#3 at 6"	15.2	13.6	10.4	2"	55	21"	2	190	7	Mast arm assembly. (see Selection Table) Strain pole taller than 30' & strain pole with mast arm
42-A	42"	14- #9	#3 at 6"	17.4	15.6	11.9	2 ¼"	55	23"	2	271	9	Mast arm assembly. (see Selection Table)

FOUNDATION SELECTION TABLE FOR STANDARD MAST ARM PLUS ILSN SUPPORT ASSEMBLIES (ft)

		FDN 30-A	FDN 36-A	FDN 36-B	FDN 42-A
80 MPH DESIGN WIND SPEED	MAX SINGLE ARM LENGTH	32' ⚠1	48'		
	MAXIMUM DOUBLE ARM LENGTH COMBINATIONS	24' X 24'			
		28' X 28'			
		32' X 28'	32' X 32'		
			36' X 36'		
			40' X 36'		
			44' X 28'	44' X 36'	
100 MPH DESIGN WIND SPEED	MAX SINGLE ARM LENGTH	⚠1	36'	44'	
	MAXIMUM DOUBLE ARM LENGTH COMBINATIONS		24' X 24'		
			28' X 28'		
			32' X 24'	32' X 32'	
				36' X 36'	
				40' x24'	40' X 36'
					44' x 36'

EXAMPLE:
1. For 80mph design wind speed, foundation 30-A can support up to a 32' arm with another arm up to 28'
2. For 100mph design wind speed, foundation 36-A can support a single 36' mast arm.

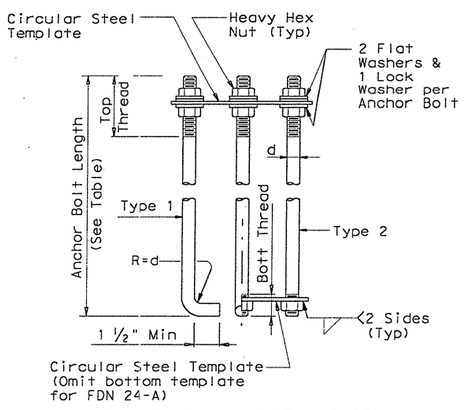

HOOKED ANCHOR (TYPE 1) NUT ANCHOR (TYPE 2)

ANCHOR BOLT ASSEMBLY

INSTALLATION PROCEDURE:

Threads of anchor bolts shall be coated with pipe joint compound prior to installation of upper nuts when erecting pole. After pole is plumbed and in permanent alignment, the exposed threads of painted bolts shall be cleaned and an additional coating of zinc-rich paint applied to seal the bolt thread-nut joint.

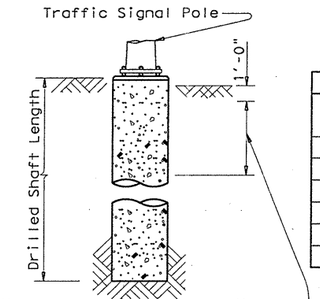

Use average N value over the top third of the embedded shaft. Ignore the top 1' of soil.

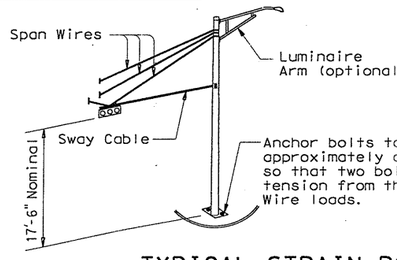

TYPICAL STRAIN POLE ASSEMBLY

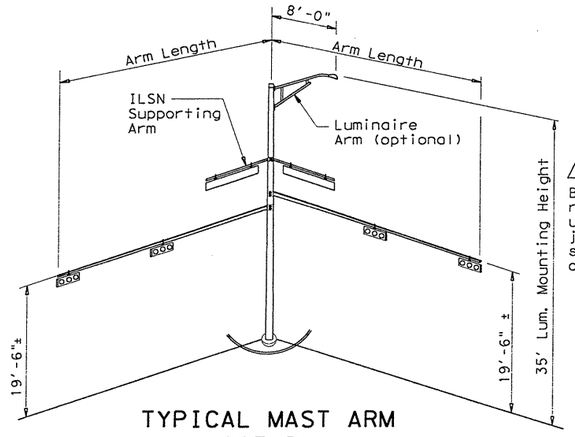

TYPICAL MAST ARM ASSEMBLY

NOTES:

① Anchor bolt design develops the foundation capacity given under Foundation Design Loads.

② Foundation Design Loads are the allowable moments and shears at the base of the structure.

③ Foundations may be listed seperately or grouped according to similarity of location and type. Quantities are for the Contractor's information only.

④ Field Penetrometer readings at a depth of approximately 3 to 5 feet may be used to adjust shaft lengths.

⑤ If rock is encountered, the Drilled Shaft shall extend a minimum of two diameters into solid rock.

⑥ Decimal lengths in Design Table are to allow interpolation for other penetrometer values. Round to nearest foot for entry into Summary Table.

ANCHOR BOLT & TEMPLATE SIZES

BOLT DIA IN.	⑦ BOLT LENGTH	TOP THREAD	BOTT THREAD	BOLT CIRCLE	R2	R1
¾"	1'-6"	3"	—	12 ¾"	7 ⅛"	5 ⅝"
1 ½"	3'-4"	6"	2"	17"	10"	7"
1 ¾"	3'-10"	7"	2 ¼"	19"	11 ¼"	7 ¾"
2"	4'-3"	8"	2 ½"	21"	12 ½"	8 ½"
2 ¼"	4'-9"	9"	3"	23"	13 ¾"	9 ¼"

⑦ Min dimensions given, longer bolts are acceptable.

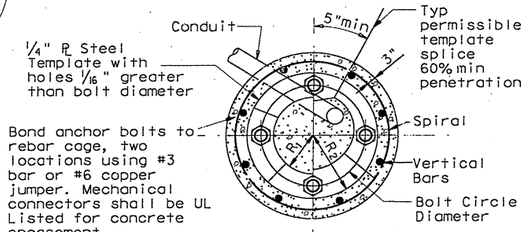

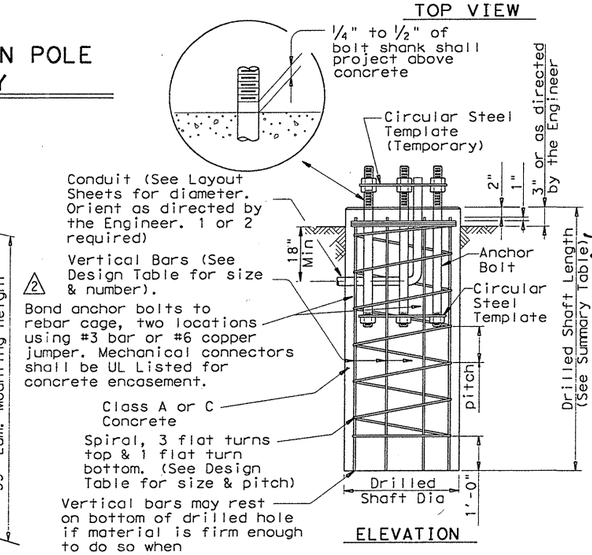

FOUNDATION DETAILS

FOUNDATION SUMMARY TABLE ③

LOCATION IDENTIFICATION	AVG. N BLOW /ft.	FDN TYPE	NO. EA	DRILLED SHAFT LENGTH ⑥ (FEET)				
				24-A	30-A	36-A	36-B	42-A
SH 29 & CR 265								
POLE E	10	24A	1	6.0				
POLE F	10	24A	1	6.0				
POLE G	10	24A	1	6.0				
IH 35 & SH 29								
POLE A	10	36A	1			13.2		
POLE B	10	24A	1	6.0				
POLE C	10	36A	1			13.2		
POLE D	10	24A	1	6.0				
NOTE: FOUNDATIONS FOR 60 FT. MAST ARMS LISTED ON LMA(4)-01								

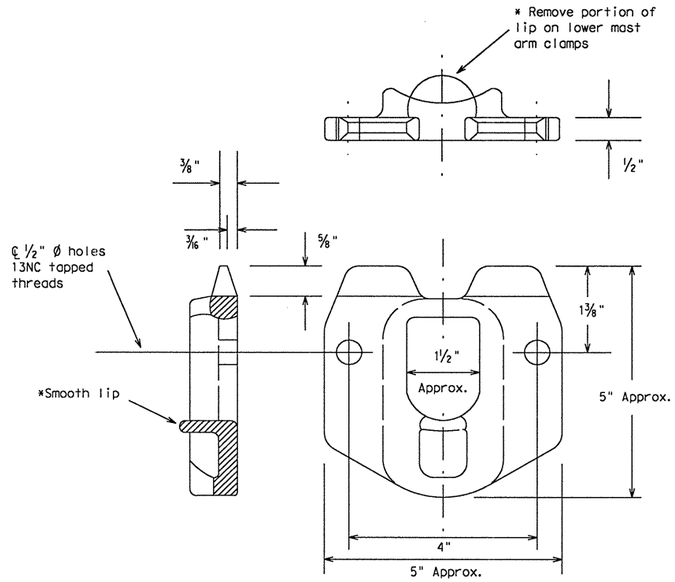

POLE SIMPLEX DETAILS

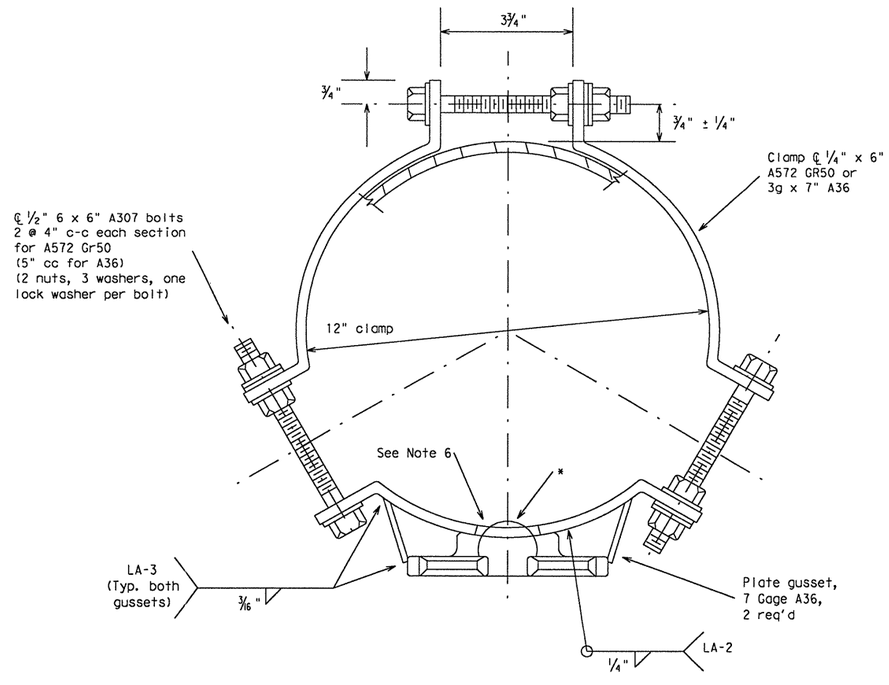

CLAMP DETAIL

OTHER MATERIALS:

1. Pole simplex shall be ASTM A27 GR65-35 or A148 GR80-50 or A576 GR1021. ASTM A576 must be suitable for forging and also meet minimum tensile of 65ksi, minimum yield of 35ksi, and elongation in 2 inches of 22 percent.
2. A36M50 steel may be used in lieu of ASTM A572 GR50.
3. Welded tabs and backplates shall be ASTM A-36 steel or better.
4. Nylon insert locknuts shall conform to ASTM A563.

GENERAL NOTES:

1. Materials and fabrication shall be in accordance with the Specifications and with the details, dimensions, and weld procedures shown herein. Weld references call for preapproved weld procedures which the Fabricator must obtain prior to fabrication. In the absense of specified fabrication tolerances, dimensions shall be within the tolerances generally obtainable in normal fabrication practice.
2. All parts shall be galvanized after fabrication in accordance with ASTM 153 or 123. The throat of the Simplex shall be made free of all rough or sharp edges resulting from the galvanizing process.
3. Each simplex fitting shall be supplied with 2 ASTM A325 bolts, ½ in. X 1½ in. and 2 lock washers. The bolts and lock washers shall be secured to the clamp with the other hardware items. The Fabricator shall ship clamp assembly together in a single package, including all bolts, nuts, and washers required for the clamp and simplex fitting.
4. Design conforms to 1985 AASHTO "Standard Specifications for Structural Supports for Highway Signs, Luminaires, and Traffic Signals" and interim revisions thereto. Design Wind Speed equals 80 mph plus a 1.3 gust factor. Clamps are designed to support a 75 lb. luminaire having an effective projected area (actual area times drog coefficient) of 1.4 sq.ft.,12 ft. maximum arm length.
5. Each assembly shall consist of one upper piece simplex fitting having a smooth lip and one lower piece simplex fitting with the lip removed.
6. Approximately 2 in. diameter hole in upper mast arm clamp.

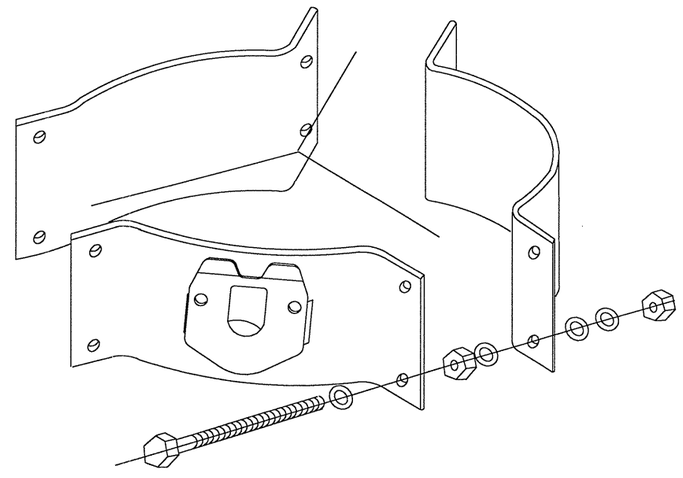

PROJECTION

For 8.9 - 12 inch diameter Signal Poles
(Two req'd for each mast arm)

STANDARD PLANS
Texas Department of Transportation
Traffic Operations Division

CLAMP ON FITTING ASSEMBLY FOR LUMINAIRE MAST ARM

CFA-99

© TxDOT			DN: KAB	CK: RES	DW: FDN	CK: CAL
REVISIONS 11-99	STATE DISTRICT	FEDERAL REGION	FEDERAL AID PROJECT			SHEET
	AUS	6	CC 337-1-29			169
	COUNTY		CONTROL	SECTION	JOB	HIGHWAY
	WILLIAMSON		0337	01	029	SH 29

D-18-6100.001
November 99

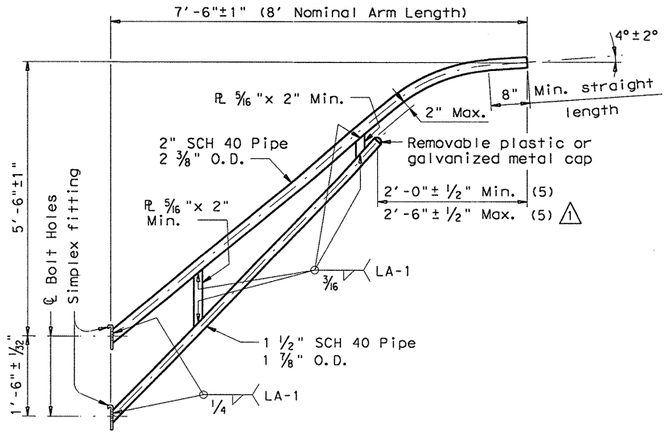

8-FOOT LUMINAIRE ARM

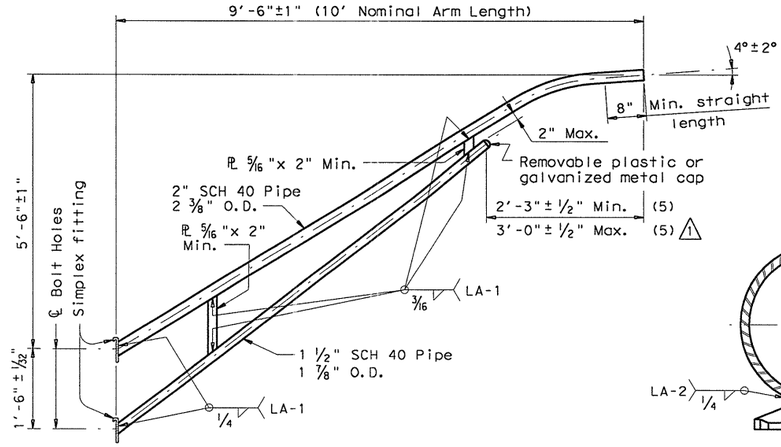

10-FOOT LUMINAIRE ARM

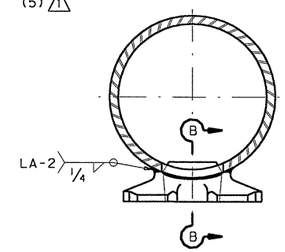

DIRECT ATTACHMENT DETAIL

MATERIALS	
Pole or Arm Simplex	ASTM A27 GR 65-35 or A148 GR 80-50 or A576 GR 1021 (4) or A36 (Arm only)
Arm Pipes	ASTM A53 GR A or B or A500 GR B or A501 or A595 (2) or A715 GR 50
Arm Plates (3)	ASTM A36 or A572 GR50 (1) or A595 GR A or A588
Misc.	ASTM designations as noted

(1) ASTM A36M50 steel as described in Item 442 "Metal for Structures" may be used in lieu of A 572 GR 50.

(2) If A595 GR A material is used, arm need not be cold worked to A595 requiremants, but material must have 40 ksi minimum yield prior to fabrication.

(3) Either of the materials listed for pates may be used where the drawings do not specify a particular ASTM designation.

(4) A576 must be suitable for forging and also meet minimum tensile strength of 65 ksi, minimum yield of 35 ksi, and elongation in 2 inches of 22 percent.

(5) Dimensional limits are given to show acceptable variation in design. All of a Fabricator's production of a particular arm length shall have the same dimensions within specified tolerances.

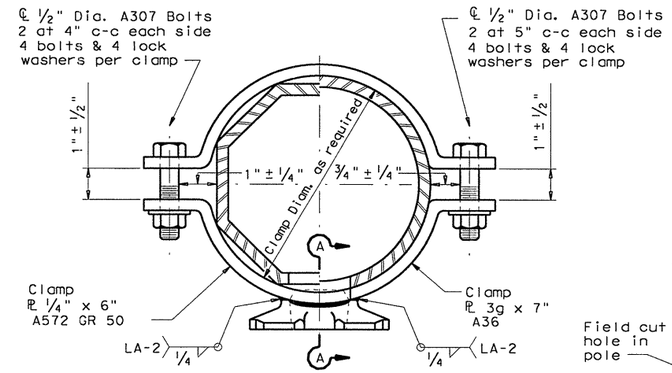

CLAMP ATTACHMENT DETAIL NO. 1 (HALF SECTION)

CLAMP ATTACHMENT DETAIL NO. 2 (HALF SECTION)

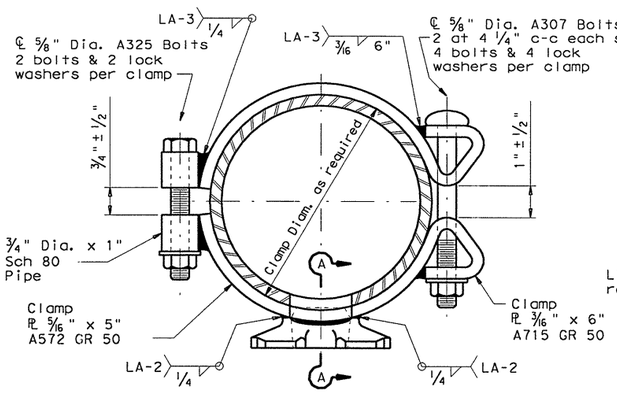

CLAMP ATTACHMENT DETAIL NO. 3 (HALF SECTION)

CLAMP ATTACHMENT DETAIL NO. 4 (HALF SECTION)

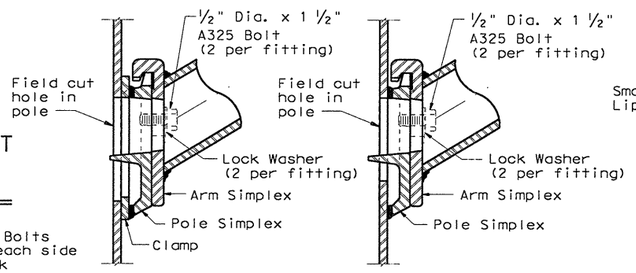

UPPER SIMPLEX FITTING

UPPER SIMPLEX FITTING

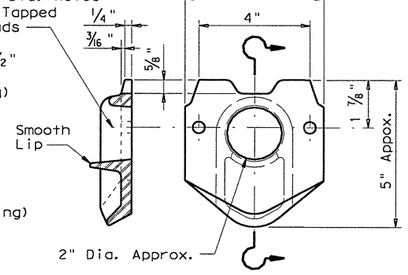

POLE SIMPLEX DETAIL

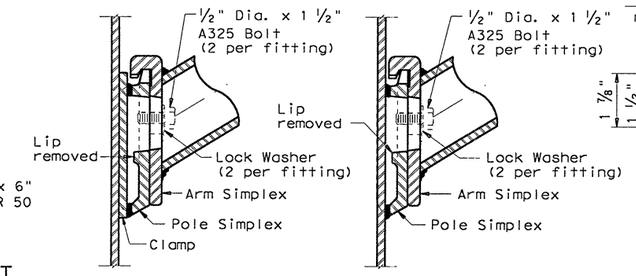

LOWER SIMPLEX FITTING

LOWER SIMPLEX FITTING

SECTON A-A

SECTON B-B

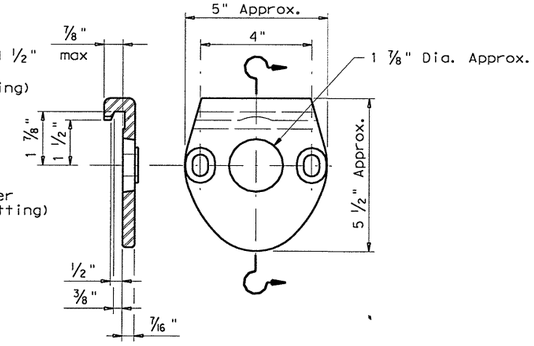

ARM SIMPLEX DETAIL

GENERAL NOTES:

Design conforms to 1994 AASHTO Standard Specifications for Structural Supports for Highway Signs, Luminaires, and Traffic Signals and Interim Revisions thereto. Design Wind Speed equals 90 mph plus a 1.3 gust factor. Arms are designed to support a 75 lb. luminaire having an effective projected area (actual area times drag coefficient) of 1.5 sq. ft.

Materials and fabrication shall be in accordance with the Specificatons and with the details, dimensions, and weld procedures shown herein. Weld references call for preapproved weld procedures which the Fabricator must obtain prior to fabrication. In the absense of specified Fabricaton tolerances, dimensions shall be within the tolerances generally obtainable in normal fabrication practice.

Unless otherwise noted, all parts shall be galvanized after fabrication in accordance with the Specifications.

Special designs require submission of shop drawings in accordance with the item "Steel Structures".

Each pole simplex fitting shall be supplied with 2 A325 bolts and 2 lock washers of the size specified. The bolts and lock washers shall be secured to the pole with the other hardware items called for in the plans. When clamp attachment is specified, the Fabricator shall ship the clamp assembly securely attached to the pole at the location shown on the plans.

If clamp assemblies are ordered without poles, the Fabricator shall ship one upper and one lower clamp assembly together in a single package, including all nuts and washers required for the clamps and simplex fittings.

Texas Department of Transportation
Traffic Operations Division

STANDARD ASSEMBLY DRAWINGS FOR LUMINAIRE SUPPORT STRUCTURES

ARM DETAILS

LUM-A-99

FILE: lum-a.dgn	DN: LEH	CK: JSY	DW: LTT	CK: TEB	STD:	
©TxDOT August 1995	DIST	FED REG	FEDERAL AID PROJECT			SHEET
REVISIONS	AUS	6	CC 337-1-29			170
5-96 1-99	COUNTY		CONTROL	SECT	JOB	HIGHWAY
	WILLIAMSON		0337	01	029	SH 29

1 1-99 - minor typo correction

...\signals\lum-a.dgn 09/21/2004 09:43:56 AM

GENERAL NOTES:

I. SCOPE

Details herein apply to roadway lighting installations bid under the following Specification Items: Roadway Illumination Assemblies, Relocate Roadway Illumination Assemblies, Foundations for Signs, Traffic Signals and Roadway Illumination Assemblies, and Special Specifications relating to roadway lighting. All work, materials and services not shown on the plans which may be necessary for complete and proper construction shall be performed, furnished and installed by the Contractor. Faulty fabrication or poor workmanship in any material, equipment or installation will be considered justification for rejection. Material and installation shall comply with the applicable provisions of the National Electrical Code, National Electrical Manufacturers Association and, when required, Underwriters Laboratories standards. Where manufacturer's provide warranties or guarantees as a customary trade practice, Contractor shall furnish to the State such warranties or guarantees.

The location of poles and fixtures are diagrammatic only and may be shifted by the Engineer to accommodate local conditions. Erection and/or removal of poles and luminaires located near overhead electrical lines shall be accomplished using established industry and utility safety practices and in accordance with laws governing such work. The Contractor shall consult with the appropriate utility company prior to beginning such work.

II. ROADWAY ILLUMINATION ASSEMBLIES

A. General

1. Structural Support Design for Luminaires. Lighting standards shall be designed in accordance with the latest issue of the AASHTO "Standard Specifications for Structural Supports for Highway Signs, Luminaires and Traffic Signals." All poles shall be designed for 80 mph wind loads. An additional 1.3 gust factor shall be applied to the wind loads. For transformer base poles, fabricator shall include transformer base and connecting hardware in design calculations and shop drawing submittals. Manufacturer's shop drawings shall include the ASTM designations for all material to be used. See paragraph II. B. for additional requirements for the transformer base.
2. Slip Joint Poles. Poles may be fabricated in two sections and field-assembled by the lap-joint method. The two sections shall telescope together with a lap length of not less than 1-1/2 times the shaft diameter at the lap joint. The longitudinal seam weld on the outer shaft at the slip joint end shall be a full penetration weld for a minimum of the slip joint length plus 6 inches.
3. Mast Arm Attachments. All poles and attachments shall be structurally designed to support two 12-foot mast arms and luminaires. Poles shall be supplied with mast arm combinations as shown in the plans. All mast arms shall be designed for a 55-pound luminaire having an effective projected area of 1.6 square feet.
4. Minor Damage Repair. The finished pole shall have a smooth, uniform finish free of pits, blisters, or other defects. Scratched, chipped, or damaged areas on galvanized poles and mast arms shall be thoroughly cleaned by wire brushing. The cleaned area shall be painted with two coats of zinc rich paint containing a minimum of 84% metallic zinc.
5. Pole Bonding Means. All shoe base poles, including poles on concrete traffic barriers, shall have a grounding lug with 1/2-13 NC female threads inside the pole near the hand hole, minimum of 3 full threads.
6. Hand Holes. All shoe base poles shall have hand holes with reinforcing frames and covers. The openings on all poles shall be approximately 4 inches x 10 inches located approximately 10 inches from the bottom of the pole and, except for poles mounted on concrete traffic barrier, shall be placed 90 degrees to mast arm unless otherwise noted on the plans. For poles mounted on concrete median barrier, all hand holes shall be on the same side of the median.
7. CTB Poles. Poles installed on concrete traffic barrier shall also meet the requirements of CTB details.
8. J-Hooks. All poles shall be equipped with a J-hook inside the pole, near the top for supporting vertical conductors.
9. Base Plate Bolt Circle. For bolt circles for poles mounted on CTB, see CTBI(4) or SSCB(4). For poles placed on existing bridge brackets or existing foundations, bolt circle shall be coordinated with anchor bolts in place. For other bolt circles, See RID(6).
10. Steel Poles.
    a. Steel poles shall be fabricated in accordance with the Item "Steel Structures." Longitudinal seam welds for pole sections shall have 60% minimum penetration, except that weld shall be full penetration within 6 inches of circumferential base plate welds. All welding shall be in accordance with the ANSI/AWS Structural Code D1.1. Two-section poles joined by circumferential welds will not be permitted, unless otherwise shown on the plans. Unless otherwise shown on the plans, poles and hardware shall be galvanized in accordance with Item 445, "Galvanizing".
    b. Pole components shall be constructed using the following materials:
    Shaft: ASTM A-572 Grade 50 or ASTM A-595 Grade A (50 KSI min. yield) or ASTM A36M50.
    Base Plate: ASTM A-27 Grade 65-35 or ASTM A-36.
    Mast Arm Connector: ASTM A-27 Grade 65-35.
    Mast Arms: Steel pipe ASTM A-53 Grade A or B or ASTM A-501 with 20% elongation in 2 inches or A-513 TY I with minimum 30 KSI yield and 15% elongation in 2 inches.
    Pole Cap: Pole cap shall be zinc die-cast, aluminum, or galvanized metal, secured by three stainless steel or galvanized screws.
    Pole Hardware: All bolts except mast arm connection bolts shall be stainless steel or standard steel galvanized ASTM A-153 Class C or D, or B-695 Class 50. Mast arm connection bolts shall be ASTM A-325, ASTM A-321 or ASTM A-193 Grade B-7, galvanized as above. Nuts and washers shall be compatible with the bolts and shall be stainless steel or steel, galvanized as above. Lock washers shall be provided on all bolted connections.
11. Aluminum Poles.
    a. Aluminum poles shall be fabricated in accordance with "Structural Welding, Aluminum" ANSI/AWS D1.2.
    b. Pole components shall be constructed using the following material:
    Shaft: ASTM B-221 or B-241 Alloy 6063-T6, ASTM B-209 Alloy 5086-H34, ASTM B-221 Alloy 6005-T5.
    Base Flange: ASTM B-26 Alloy 356.0-T6 or ASTM B-108 Alloy A356.0-T6 (Structural strength test required).
    Mast Arm Fitting: ASTM B-209 Alloy 6061-T6 or ASTM B-221 Alloy 6005-T5.
    Mast Arms: ASTM B-241 Alloy 6061-T6 or Alloy 6063-T6.
    Pole Cap: ASTM B-209 Alloy 5086-H32 or ASTM B-108 or B-26 Alloy 356.0-T6.
    Bolts: Stainless Steel AISI 300. Bolts threading into aluminum threads shall be treated with anti-seize compound, Never-Seez Compound, Permatex 133K or equal.
12. Alternate material equal to or better than material specified may be substituted with the approval of the Engineer.
13. Installation of high strength bolts. The tightening of nuts on high strength bolts shall be in accordance with the Item 447 "Structural Bolting."
14. Roadway Illumination Assembly poles shall be erected plumb and true. Top of foundation shall be struck level so the pole will be plumb. Shoe base poles may use leveling nuts to plumb pole. Shims and leveling nuts shall not be used under transformer bases. Grout shall not be placed between base plate or flange and the foundation.
15. In each pole, continuous color-coded stranded No. 12 AWG copper Type XHHW or other approved XLP conductors shall be connected to the line side of each ballast.
16. Acorn nuts will not be allowed for attaching pole to transformer base or foundation. Nut covers will not be allowed.
17. Fabrication tolerances shall be as shown on Fabrication Tolerances Table.

B. Transformer Base

1. Transformer base shall be cast from aluminum, ASTM B-108 or B-26 Alloy 356.0-T6, or other material approved by the Engineer, and shall be furnished with eight 1/2 inch thick flat washers as recommended by the manufacturer. Transformer base bolt circles (Top and Bottom) shall match bolt circles for poles and foundations shown on RID (6).

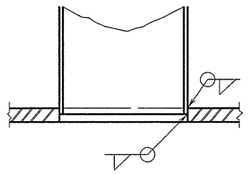

SECTION
POLE SHAFT TO BASE PLATE

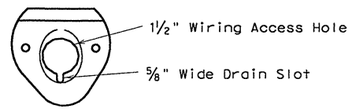

MAST ARM CONNECTOR

Steel Poles Only
Aluminum Pole Connector
Shall Be Clamp-on Type

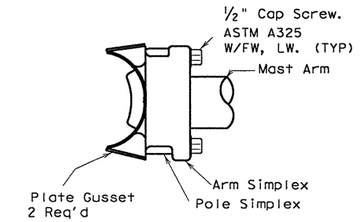

MAST ARM TO POLE
SHAFT CONNECTION

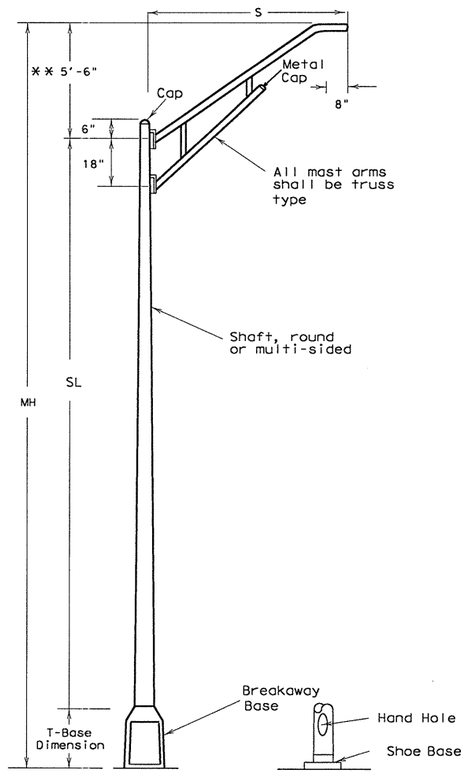

ROADWAY ILLUMINATION ASSEMBLY

EXPLANATION OF ROADWAY ILLUMINAION ASSEMBLY DESIGNATIONS

(TYPE SA 50 T - X - X (.4KW) S

SA: Pole and mast arm may be steel or aluminum.
ST: Pole and mast arm must be steel.
AL: Pole and mast arm must be aluminum.
SP: Special (ovalized) steel pole for installing on CTB. See standard sheet CTBI (4).

Two numerical digits denote mounting height in feet.

Next letter denotes type of base, (S- Shoe Base, T-Transformer Base or X-Base, B-Shoe Base Bridge Mount)

First number denotes length of mast arm in feet.

Use of second mast arm is indicated by second dashed number which denotes length in feet.

Next three figures indicate luminaire rating (1 KW= 1000 watts, .4 KW= 400 watts, etc.)
Fixtures for poles with 4 ft. or longer mast arms as shown on RID(1) and fixtures for U/P (SPL-CO) (.15KW)S(TYPE 1) and (TYPE 2) as shown on RID(4) shall be "cobra head" style fixtures that meet the specifications shown on RID(2) and RID(3). Fixtures bid under the descriptive code RDWY ILL ASSEM U/P TYPE IF shall meet the specifications show on RID(5). All other fixtures bid under Item 610 shall meet specifications shown elsewhere in the plans.

Last letter indicates the type of lamp (M- Mercury, S- High Pressure Sodium, L- Low Pressure Sodium).

** 2.5' for poles with 4' mast arms.

MH = Mounting Height
SL = Shaft Length
S = Spread (Mast arm length)
MH = SL + 5' + (T-Base dimension)
MH = SL + 5' (Shoe Base)

1/04 Revision

Modify fixture specifications

STANDARD PLANS
Texas Department of Transportation
Traffic Operations Division

ROADWAY ILLUMINATION DETAILS

RID(1)-04

© TxDOT January 1992	DN: - KB	CK: - KB	DW: - FDN	CK: - CAL

REVISIONS	STATE DISTRICT	FEDERAL REGION	FEDERAL AID PROJECT	SHEET
5-93 10-93 10-98 1-04	AUS	6	CC 337-1-29	171

COUNTY	CONTROL	SECTION	JOB	HIGHWAY
WILLIAMSON	0337	01	029	SH 29

2. Transformer base shall be approximately 15-20 inches high and shall have a door approximately 13 inches x 8 inches x 9 1/4 inches or as otherwise approved by the Engineer. Screw or bolts for attachment of door to base shall be stainless steel. Four machine bolts with four nuts, eight 1/2 inch flat washers and four lock washer, galvanized ASTM A-153 Class C or D, or B-695 Class 50, shall be provided with each transformer base for connecting the pole. Bolts shall be ASTM A325 or approved equal. Nuts shall be ASTM A-563 grade DH galvanized. A 1/2-13 NC female threaded grounding lug shall be provided inside the transformer base near the bottom.
3. The X-base shall be made from extruded aluminum channel and aluminum plate. The base breakaway features shall rely on bolt shear and not on bolt torque. Bolt shall have torque controlled break-off hex-head. Bolt shall be Aluminum Association type 2024-T4 aluminum. X-base channel shall be connected with aluminum bolts. Bolt shall be left hand thread and shall not be interchangeable with any other bolt not designed specifically for use with the X-base.
4. All breakaway bases shall meet the breakaway requirements of the AASTHO "Standard Specifications for Structural Supports for Highway Signs, Luminaires and Traffic Signals," latest edition, and shall have been tested by FHWA-approved methods. All bases shall have been structurally tested to meet or exceed the full designed plastic moment capacity of the pole. Certification of the plastic moment load test and FHWA breakaway requirement test of the model of base being furnished shall be submitted with shop drawings. Shop drawings shall show breakaway base model number and manufacturer's name or logo.
5. Bases shall be stamped, incised or by other approved permanent means, marked to show fabricator's name or logo, and model number. Such information shall be placed in a readily seen location, inside or outside the base, but shall not be placed on the door.
6. Doors for transformer bases shall be made of plastic, fiberglass or other non-aluminum material approved by the Engineer. Transformer bases shall be cleaned by grit blast cleaning after heat treatment. Certification by the manufacturer of heat treatment shall be furnished with transformer bases. The certification shall show the metal alloy and temper and that the base meets those requirements, chemical and physical. The certification shall also show the material ASTM specification. Transformer bases shall be cast with a removable tab bar for material testing. Some bars may have been removed by the manufacturer for testing.

C. Cobra Head Style Fixtures.
1. Fixture shall be UL listed for wet locations and shall be labeled IEC Standard 60529-IP 65 or better. Fixtures shall have UL label on the inside near the ballast. Fixture shall have a permanent label inside the fixture indicating the date of manufacture of the fixture. Fixture shall have wattage label per ANSI 136.15.
2. Fixture housing, lens frame, and door (if any) shall be die cast aluminum. Aluminum for housing shall be 96% copper free. Fixture mounting means shall be to a two inch pipe arm. Fixture shall be equipped with a four bolt clamp capable of being adjusted plus or minus five degrees from level. Fixture shall meet 3G peak to peak vibration test per ANSI 136.31. Fixture shall meet IESNA cutoff requirements.
3. Fixture shall have a level bubble attached to the housing. Level bubble shall be clearly visible from the ground (up to 50 ft mounting heights). Level bubble shall be sensitive to one degree (max) changes in position at any point within five degrees (min) of the level position. Photometric testing will be done with the fixture in the level position as indicated by level bubble. Fixture shall be installed in the level position.
4. EPA shall not exceed 1.6 square feet.
5. Fixture shall be equipped with a three prong photocell receptacle with shorting cap installed.
6. For fixtures to be installed on galvanized poles, the fixture housing shall be painted light gray. All other fixtures shall be painted to match poles or as approved by the Engineer.
7. Paint for fixtures shall be a thermoset powder coat system. Paint system must meet 1000 hour salt spray test per ASTM B117. Paint thickness shall be a nominal thickness of 2.5 mil and shall exhibit no pigment loss upon 50 double-rubs using Methyl Ethyl Ketone (MEK) solvent per ASTM D5402, Standard Practice for Assessing the Solvent Resistance of Organic Coatings Using Solvent Rubs.
8. All hardware, brackets, nuts, bolts, washers, ballast tray, and parts shall be made of Type 316 stainless steel, except that:
   a. Hardware, brackets, and ballast tray may be made out of aluminum, of adequate thickness as approved by the Engineer.
   b. 4 bolts, 4 flat washers, 4 lock washers, and clamp that attach the luminaire to the arm shall be galvanized to ASTM 123 or 153.
   c. All stainless steel nuts shall have nylon throat locking means.
   d. Glass lens retainer spring clips may be galvanized steel in accordance with ASTM A153.
9. Lamps socket shall meet the following requirements.
   a. Socket shall be porcelain insulated,
   b. Socket shall have a nickel plated copper alloy screw shell,
   c. Socket shall be equipped with a spring tensioned contact.
      i. Contact shall be nickel plated copper alloy or stainless steel.
      ii. Spring shall be nickel plated copper alloy or stainless steel.
   d. Screws holding screw shell into socket, if any, shall be nickel plated copper alloy or stainless steel.
   e. Socket electrical ratings shall meet or exceed the following
      i. 600 Volt
      ii. 1500 Watt
      iii. 5000 Volt Pulse
      iv. UL listed per UL 496.
      v. Socket shall be mogul base.
10. Optical assemblies shall meet the following requirements.
   a. Reflectors shall be polished aluminum with Alzak or equal coating.
   b. Reflectors shall not have any reflecting surface painted, except that, when approved by the Engineer, some surfaces may be painted with 92% reflective white paint.
   c. Reflectors may be one piece or segmented as follows.
      i. One piece reflectors:
         1. One piece reflectors shall be sealed directly to the glass lens forming an airtight envelope. The reflector to glass lens seal shall be closed cell silicone, either seamless or with a vulcanized seam.
         2. Lamp socket shall be non-adjustable and mounted to the reflector so that lamp center is consistent. Gasket between lamp support bracket and the reflector/lens assembly shall be a one piece seamless silicon gasket.
      ii. Segmented reflectors:
         1. Segments shall attach at both ends (or opposite sides if segments are square) of the segment to a rigid aluminum base plate and side wall support assembly. Glass lens to lens frame shall be sealed with a one piece seamless silicone gasket or RTV sealant.
   d. Optical assembly shall be equipped with a lamp support in addition to the lamp socket to ensure that the lamp center is positioned as intended.
11. Lens shall be clear heat tempered or borosilicate sag or flat glass, minimum 3/16" thick.
12. Luminaires for pole mounting shall not be fused. Luminaires for wall or underpass mounting shall be internally fused with a 10 amp time delay fuse.
13. Fixture shall be equipped with a two position terminal block for landing supply wires. Terminal block shall meet the following requirements.
   a. Insulation shall be porcelain or phenolic material. Phenolic terminal block will be of adequate construction as approved by the Engineer.
   b. Terminals shall be made of nickel or tin plated brass, or of aluminum.
14. Fixture shall be equipped with MOV surge protection in accordance with IEEE recommendations.
   a. MOV shall be connected from line to neutral or from line to line.
   b. MOV shall be installed on the terminal block.

Fabrication Tolerances Table		
Part	Dimension	Tolerance
Pole Asssembly	Shaft length	± 1"
	I.D. of outside piece of slip fitting pieces	+ 1/8 " - 1/16 "
	O.D. of inside piece of slip fitting pieces	+ 1/32 " - 1/8 "
	Shaft diameter: other	+ 3/16 "
	Out of "round"	1/4 "
	Straightness of shaft	± 1/4 " in 10 ft
	Twist in shaft	4° in 50 ft
	Perpendicular to baseplate	1/8 " in 24"
	Pole centered on baseplate	± 1/4 "
	Location of Attachments	± 1/4 "
Arm Assembly	Arm Length	± 3"
	Arm Rise	± 1 3/4 " in 10 ft
	Arm Diameter	± 3/16 "
	Overall length or width	± 1/4 "
	Thickness	+ 1/4 " - 1/16 "
	Deviation from flat	1/8 " in 12"
	Spacing between holes	± 3/32 "
	Anchor bolt hole size	± 1/16 "
Anchor Bolt	Length	+ 1" - 1/4 "
	Threaded length	+ 1 1/2 " - 1/8 "
	Galvanized length (if required)	+ 8" - 1/4 "
Miscellaneous	Bolt hole spacing	± 1/16 "
	Strut location in truss arms	± 1 1/2 "

FOR THREE-WIRE CIRCUIT-CENTER GROUNDED
LUMINAIRES SERVED AT 480V ON 240/480 VOLT SERVICE OR LUMINAIRES SERVED AT 240V FOR FOR 120/240 VOLT SERVICE.

FOUR-WIRE CIRCUIT-CENTER GROUNDED
LUMINAIRES SERVED AT 240V (240/480 VOLT SERVICE)

NOTES:

(1) Pole Bonding Connector Blackburn TTC3 or Weaver TGC3 or equal.
(2) Fused Connector-All electrical connectors for breakaway poles shall be watertight and shall be designed as break-away (Buchannan 65U, Bussmann HEBW, Littelfuse LEB or equal). All fuses shall be time-delay types. 10 Amp (Littelfuse FLQ, Bussman FNQ or equal).
* (3) Un-fused Connector-All electrical connections for neutrals shall be watertight. For breakaway poles, connections shall be designed as breakaway, shall have a white color marking, and shall have a permanently installed solid neutral (Buchannan 20U, Bussmann HET, Littelfuse LET or equal). Dummy/Neutral fuse shall be Bussman NTS-R-3 or equal.
(4) Split Bolt or other connector.
(5) Ground Rod Clamp - Blackburn GG58H, Burndy GKP635, or equal.

*For Transformer Base Poles. On Shoe Base Poles omit un-fused connector for neutral conductor.

1/04 Revision

Modify fixture specifications

STANDARD PLANS
Texas Department of Transportation
Traffic Operations Division

ROADWAY ILLUMINATION DETAILS

RID(2)-04

©TxDOT January 1992

DN: KB	CK: KB	DW: FDN	CK: CAL

REVISIONS	STATE DISTRICT	FEDERAL REGION	FEDERAL AID PROJECT	SHEET
5-93 10-93 10-98 1-04	AUS	6	CC 337-1-29	172

COUNTY	CONTROL	SECTION	JOB	HIGHWAY
WILLIAMSON	0337	01	029	SH 29

15. Ballasts shall meet the following requirements and shall pass tests in accordance with Test Method Tex-1130-T, Ballasts of Lighting Assemblies.
    a. Ballast and starter shall be mounted on a removable stainless steel or aluminum tray of adequate thickness as approved by the engineer.
    b. A wiring diagram for the fixture shall be inside fixture on or near the ballast.
    c. Ballast shall be copper winding magnetic regulating three isolated coil ballast.
    d. Ballast shall have a ballast factor between .95 and 1.0.
    e. When the circuit voltage indicated on the plans is applied, the ballast input wattage during fluctuations of the test voltage of plus10 percent and minus 10 percent shall not exceed the following:
        i. 220 Watts for 150 watt nominal lamp rating
        ii. 440 Watts for 250 watt nominal lamp rating
        iii. 552 Watts for 400 watt nominal lamp rating
    f. During fluctuation of the test voltage of plus 10 percent and minus 10 percent, the lamp wattage fluctuation shall not exceed a total of 20 percent and ballast shall maintain lamp wattage within the following limits.
        i. 110 Watts minimum and 180 Watts maximum for 150 Watt nominal lamp rating
        ii. 175 Watts minimum and 370 Watts maximum for 250 Watt nominal lamp rating
        iii. 280 Watts minimum and 475 Watts maximum for 400 Watt nominal lamp rating
    g. The power factor of any ballast, when tested at the circuit voltage indicated on the plans, shall not be less than 90 percent.
    h. Ballasts shall be permanently and clearly marked to indicate following:
        i. Lamp type
        ii. Catalog number
        iii. Voltage rating
        iv. Connection diagram
        v. Manufacturer
        vi. UL listing
16. The electronic starting aid shall meet the following requirements and shall pass tests in accordance with Test Method Tex-1140-T, Electronic Starting Aids of High Pressure Sodium Vapor Lighting Assembies.
    a. Starting aid shall provide a starting pulse with an amplitude of 2500 volts minimum, 4000 volts maximum.
    b. The pulse width shall be a minimum of 0.8 microseconds at 2250 volts.
    c. The pulse shall occur when the open circuit voltage is equal to or greater than 90 percent of peak open circuit voltage.
    d. Pulse repetition rate shall be a minimum of one per cycle
    e. Pulse current shall be a minimum of 0.18 amperes.
    f. The starting aid shall discontinue to pulse when, either,
        i. the lamp starts, or
        ii. after a minimum of 3 minutes and a maximum of 10 minutes if the lamp fails to start.
17. Lamps shall meet the following specifications
    a. Lamps shall be Osram Sylvania Lumalux Plus high pressure sodium (HPS) lamps of the wattages shown on the plans. No alternates will be allowed.
    b. Lamps shall fully extinguish at end of usable lamp life and remain extinguished without cycling.
    c. Lamps that burn at reduced output at end of life are not acceptable.
    d. Lamps shall meet the Federal Toxic Characteristic Leachate Procedure (TCLP).
    e. 150 watt lamps shall be 55 volt.
    f. Lamp shall be supplied with the fixture.
18. Photometrics. Fixtures shall meet the following photometric requirements using published photometric data and photometric data obtained by testing sampled fixtures.
    a. 150 Watt mast arm (underpass) mounted luminaire shall meet IESNA Medium Cutoff requirements. The fixtures shall provide a minimum intensity of 0.20 foot-candle in a rectangular area measuring 110.0 feet by 30.0 feet, when mounted 20.0 feet above the midpoint of either long side of the surface area.
        i. The maximum to minimum horizontal illuminance uniformity ratio shall not exceed 50:1 within the above mentioned rectangular area.
    b. The 250-watt mast arm mounted luminaire shall meet IESNA cutoff requirements and, when mounted 40.0 feet above the midpoint of either long side of a rectangular area 190 feet by 45 feet, shall provide a minimum intensity of 0.20 footcandle at any point on the surface of this area. Light intensities measured in footcandles along a line parallel to and 20.0 feet in from the long side of the previously defined rectangular area above which the luminaire is mounted shall decrease at a rate not to exceed 0.50 footcandle in any 5.0 foot interval along the aforementioned line from 10.0 to 90.0 feet on both sides of the luminaire and shall not be less than 0.30 footcandle at any point along such a line.
        i. The maximum to minimum horizontal illuminance uniformity ratio shall not exceed 20:1 within the above mentioned rectangular area.
    c. The 400-watt mast arm mounted luminaire shall meet IESNA cutoff requirements and, when mounted 50.0 feet above the midpoint of either long side of a rectangular area 220.0 feet by 60.0 feet, shall provide a measured minimum intensity of 0.20 footcandle at any point on the surface of this area. Light intensities measured in footcandles along a line parallel to and 30.0 feet in from the long side of the previously defined rectangular area above which the luminaire is mounted shall decrease at a rate not to exceed 0.75 footcandle in any 10.0 foot interval along the aforementioned line from 10.0 to 90.0 feet on both sides of the luminaire and shall not be less than 0.30 footcandle at any point along such a line.
        i. The maximum to minimum horizontal illuminance uniformity ratio shall not exceed 20:1 within the above mentioned rectangular area.
19. Photometric data shall be consistent from fixture to fixture. Unless otherwise approved by the Engineer, the photometric performance shall match published data (or approved photometric reports submitted during the prequalification process as the typical photometric output in lieu of published data) as follows:
    a. Point of maximum candela shall be within 5 degrees horizontally and vertically.
    b. Maximum candela shall be within 20 percent of published maximum candela.
    c. Fixture efficiency shall be within 10 percent of published efficiency.
20. All luminaires shall be pre-qualified. No alternates will be considered.
    a. Only materials, with approved product codes or designations, from prequalified producers are accepted on bids. The Construction Division (CST) of the Texas Department of Transportation (TxDOT) maintains the material producers list of approved producer product codes or designations. Use the following website to view this list:
        http://www.dot.state.tx.us/business/materialproducerlist.htm
    Use of prequalified material does not relieve the contractor of the responsibility to ensure that the material meets specifications. All materials, including those shown on the prequalified material list, may be inspected and tested at any time and may be rejected if not in compliance with the specifications.
    b. Contractor shall notify the Engineer in writing as to which fixture from the list of approved fixtures will be supplied.
    c. A manufacturer desiring to have a fixture listed as a pre-qualified fixture shall:
        i. Submit a sample of each type of luminaire and all pertinent data, including published photometric data and recently tested photometric data (IES format, both "averaged" and both sides of "un-averaged" data) to:

            TXDOT- TRF
            118 East Riverside Dr.
            Austin, TX 78704

        ii. Manufacturer must demonstrate a commitment to quality
        iii. Manufacturer shall prepare and submit a QA/QC program documentation with the following minimum requirements
            1. Written statement of the companies QA/QC policy
            2. QA/QC person is employed that has special QA/QC training and has QA/QC as their primary job responsibility
            3. A written procedure specifically for handling orders for fixtures built to TxDOT specifications.
            4. A written procedure for keeping track of fixtures built, certified, and tested for TxDOT orders.
            5. A check list of features for TxDOT fixtures with QA/QC person signature.
    d. Prequalification samples, if approved, will not be returned to the manufacturer but will be retained by TxDOT for comparison testing. Once a fixture has been approved, no changes shall be made in any material or manufacturing methods without prior approval of the Department. Unapproved changes will result in rejection of fixtures.
    e. In addition, luminaires will be tested for compliance with this specification. Luminaires that inconsistently pass testing or that are inconsistent with published photometric information will be removed from the pre-qualified list at the discretion of the engineer.
21. Sampling. Sample in accordance with Text Method Tex-1110-T, Sampling Lighting Assemblies.
22. Warranty. Any fixture failing within five years of installation will be replaced by the manufacturer with a fixture that passes all testing, delivered to the project location.
23. Testing. The manufacturer shall conduct electrical testing required in paragraphs 15 and 16, and all photometric testing shall be at the manufacturer's expense and at the following rates.
    a. From each lot or manufacturing run, the manufacturer shall select one completed fixture of each 25, with a minimum of two and a maximum of 5, to be photometrically tested at an independent test lab approved by TxDOT.
        i. Testing shall provide IES photometric report in two formats:
            1. Standard averaged format for asymmetric fixtures
            2. Un-averaged format showing both sides, un-averaged data may be supplied in two files or as otherwise approved by the Engineer.
        ii. Test data shall be supplied directly to TRF-TE electronically for evaluation prior to shipping fixtures to the project.
        iii. Test reports shall include:
            1. TxDOT's Control-Section-Job number, maintenance contract number, or purchase order number that the fixtures are assigned to,
            2. a unique fixture test number per fixture,
            3. date of manufacture, and
            4. quantities supplied and lot number per fixture type.
        iv. Unique lab report number shall be written on the top of the fixture housing with permanent marker. Test lab shall keep results for 5 years and shall make all documentation available to TxDOT.
        v. Manufacturer shall keep records of manufacturing lots, test reports, lot quantities, and other pertinent details. Such records shall be submitted to the Department upon request.
        vi. Manufacturer shall make available to TxDOT inspectors upon request, all manufacturing facilities involved in the production of fixtures intended to be used on TxDOT projects, inventories of fixtures produced to TxDOT specifications, and records of fixture testing and tracking.
    b. Departmental Test Reporting. Departmental test reports will be issued as follows:
        i. For projects requiring 1-15 fixtures of a particular wattage, TRF will authorize a passing test report when the following steps have been completed.
            1. a review of the submittal letter from the contractor to the Engineer identifying the fixture to be supplied,
            2. a review of test reports supplied by the manufacturer shows that the fixtures meet the photometric requirements of this specification, and
            3. a review of the history of testing from that manufacturer shows consistent passing of the electrical, photometric, and fixture construction quality requirements.
        ii. For projects with 16 or more fixtures of a particular wattage, TRF will authorize a passing test report when the following steps have been completed.
            1. a review of the submittal letter from the contractor to the Engineer identifying the fixture to be supplied,
            2. a review of test reports supplied by the manufacturer shows that the fixtures meet the photometric requirements of this specification, and
            3. a review of the history of testing from that manufacturer shows consistent passing of the photometric and fixture construction quality requirements.
            4. Fixtures are shipped to the project and two fixtures are sampled and tested by the Engineer in accordance with Texas Test Method Tex 1110-T.
            5. A review of the photometric test reports from the Departments lab show compliance with this specification and comparison to photometric reports supplied by the manufacturer are within the tolerances allowed by this specification.

1/04 Revision

Modify fixture specifications

STANDARD PLANS
Texas Department of Transportation
Traffic Operations Division

ROADWAY ILLUMINATION DETAILS

RID(3)-04

©TxDOT January 1992

DN: - KB	CK: - KB	DW: - FDN	CK: - CAL

REVISIONS	STATE DISTRICT	FEDERAL REGION	FEDERAL AID PROJECT	SHEET
5-93	AUS	6	CC 337-1-29	173
10-93				
10-98				
1-04				

COUNTY	CONTROL	SECTION	JOB	HIGHWAY
WILLIAMSON	0337	01	029	SH 29

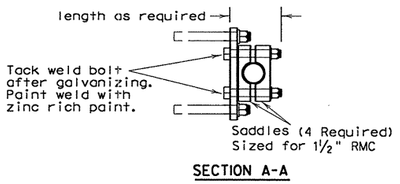

SECTION A-A

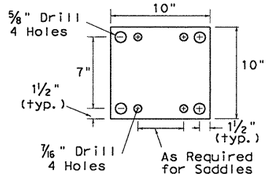

MOUNTING PLATE

Make from ⅜" Plate Galv. after fabrication

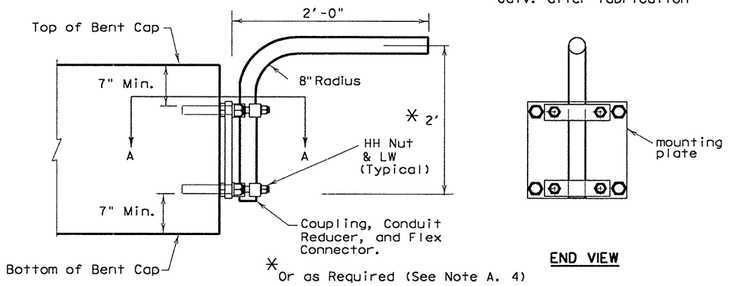

PROFILE VIEW

END VIEW

UNDERPASS LIGHTING ARM TYPE 1

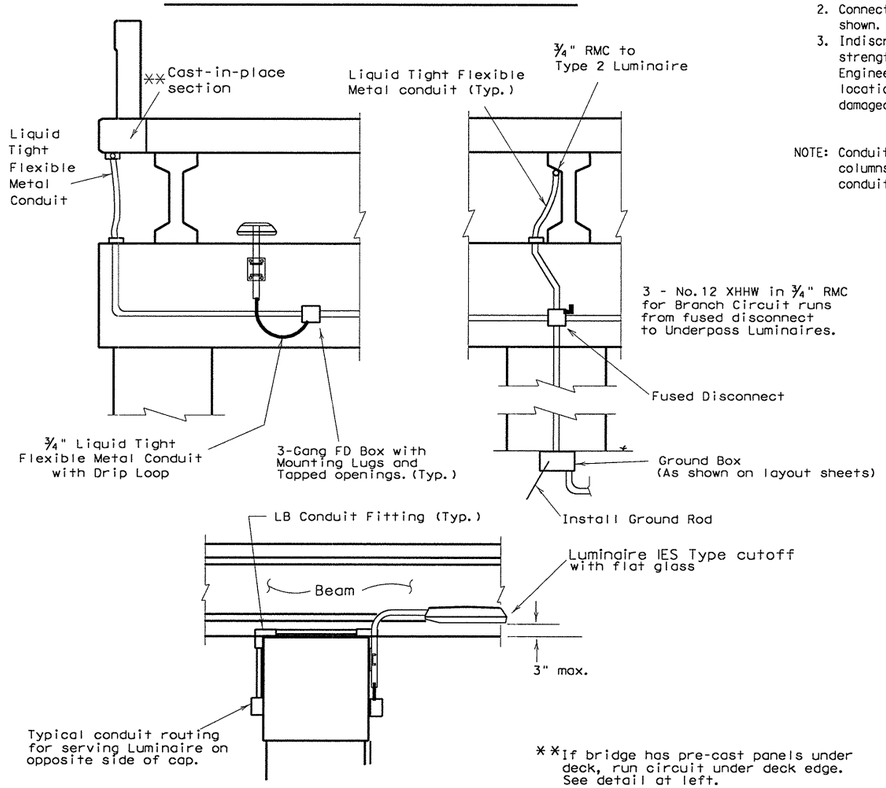

**If bridge has pre-cast panels under deck, run circuit under deck edge. See detail at left.

U/P (SPL-CO)(.15 KW)S(TYPE 1)

NOTES:

A. ALL 150 watt H.P.S. LUMINAIRES
1. Luminaire locations, conduit and conductor sizes and routing are typical and diagrammatic only. See project layout sheets for specific details.
2. All conductors and conduit will be paid for under the items "Conduit" and "Electrical Conductor", unless otherwise shown on the plans. See lighting layout sheets.
3. A ground rod shall be installed and attached to the equipment grounding conductor in all ground boxes containing conduit that extends above grade six inches or more. All RMC in these boxes shall have grounding bushings and shall be properly bonded.
4. Adjust conduit in saddles to place fixture height and orientation as required. See fixture orientation detail and layout sheet. Where practicable place luminaires so the bottom of luminaire is above the bottom of the beam, maximum of 3 inches. (See detail.)
5. All bolts, nuts and washers shall be galvanized, ASTM A-153.
6. Fabrication of brackets and support arms will not be paid for directly but shall be subsidiary to Item 610, "Roadway Illumination Assemblies."
7. A Heavy Duty, 480 volt or 600 volt, 30 amp fused disconnect switch in NEMA 3R enclosure shall be installed in circuits to switch underpass luminaires. Switch shall be mounted 10 feet (minimum) above grade on columns or bent caps as approved by the Engineer. Contractor shall modify switch to allow padlocking in the "ON" and in the "OFF" positions. 20 amp fuses shall be installed. Furnishing and installing disconnect switches for underpass lighting fixtures shall not be paid for separately but shall be subsidiary to the various bid items of the contract.

B. TYPE 1
1. Type 1 arm shaft shall be 1 1/2 inch rigid metal conduit (1.90" O.D., 0.145" wall).
2. Anchor bolts for Type 1 luminaire shall be 3/8 inch bolt or stud expansion anchors with minimum pull out of 3000 lb each, with 4 inch minimum embedment, and lock washers.
3. Attach conduit to plate with 4 saddles, four 3/8" (min.) bolts, HHN & LW.

C. TYPE 2
1. Type 2 arm shaft shall be 2 inch rigid metal conduit (2.375" O.D., 0.154" wall). Reduce conduit length for Type C concrete beams. Field cutting and threading will be permitted. Paint cut and threaded areas with zinc rich paint after conduit is connected to adjacent fitting.
2. Connecting conduit may be strapped to tapered section only of precast beams as shown. Anchor as approved by the Engineer. Maximum anchor depth is 1 inch.
3. Indiscriminate drilling into precast concrete beams may result in reduced beam strength. Drilling location and method shall be only as directed by the Engineer. See location of underpass lighting mounting bracket detail. The locations given in the table are such that reinforcing strands will not be damaged.

NOTE: Conduit on Columns, Caps, and Slab is shown surface mounted. For all new columns and caps, Contractor shall embed conduit in concrete. Embedded conduit shall be PVC. Metal junction boxes and conduit shall be grounded.

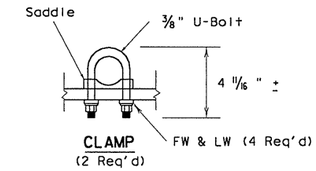

CLAMP
(2 Req'd)

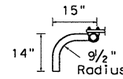

PLAN VIEW

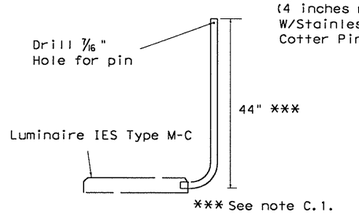

SIDE

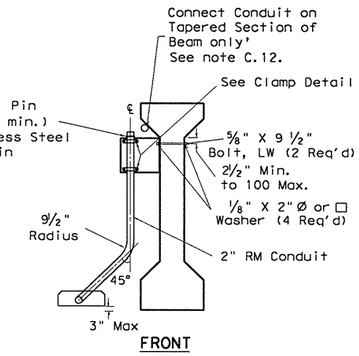

FRONT

UNDERPASS LIGHTING ARM TYPE 2

Bridge Span Length	Minimum Distance From Bent Cap to Fixture Mounting Arm
≤ 50'	10'
50'-70'	15'
70'-90'	20'
>90'	25'

See detail below.

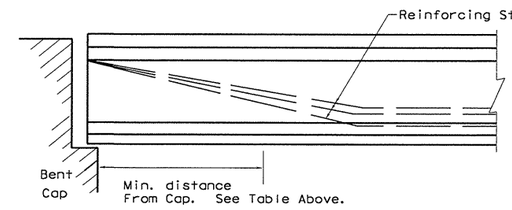

LOCATION OF UNDERPASS LIGHT MOUNTING BRACKET

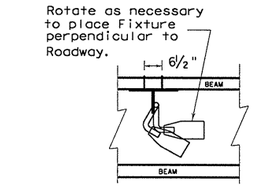

FIXTURE ORIENTATION
PLAN VIEW

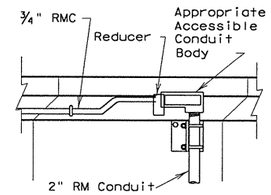

CONDUIT CONNECTION PROFILE
(TYPICAL)

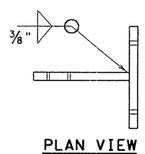

PLAN VIEW

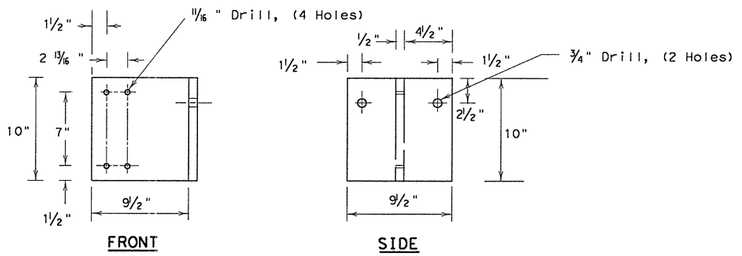

FRONT SIDE

BRACKET DETAIL

Make From ½" Plate (ASTM A-36)
Galvanize after fabrication, ASTM A-123

U/P (SPL-CO)(.15 KW)S(TYPE 2)

1/04 Revision

Modify fixture specifications

STANDARD PLANS
Texas Department of Transportation
Traffic Operations Division

ROADWAY ILLUMINATION DETAILS

RID(4)-04

©TxDOT January 1992

DN: - KB	CK: - KB	DW: - FDN	CK: - CAL

REVISIONS	STATE DISTRICT	FEDERAL REGION	FEDERAL AID PROJECT	SHEET
5-93	AUS	6	CC 337-1-29	174
10-93				
10-98				
1-04				

COUNTY	CONTROL	SECTION	JOB	HIGHWAY
WILLIAMSON	0337	01	029	SH 29

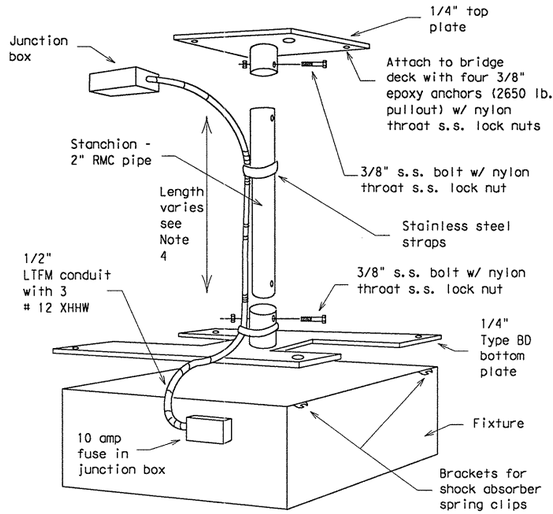

PERSPECTIVE TYPE BD
(BRIDGE DECK)

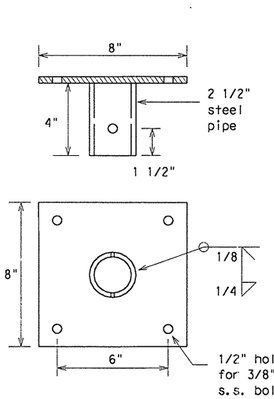

TOP PLATE - TYPE BD

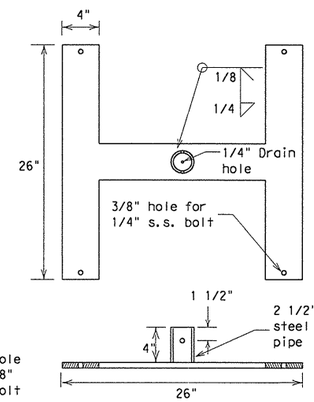

BOTTOM PLATE - TYPE BD

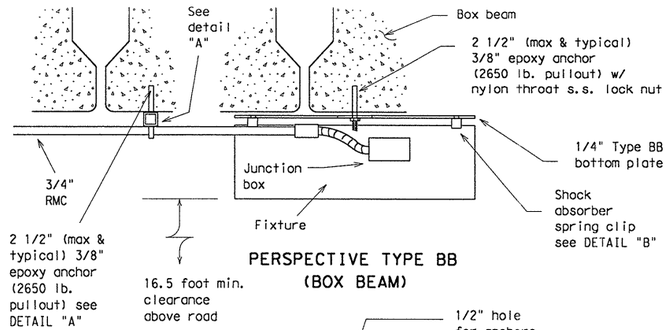

PERSPECTIVE TYPE BB
(BOX BEAM)

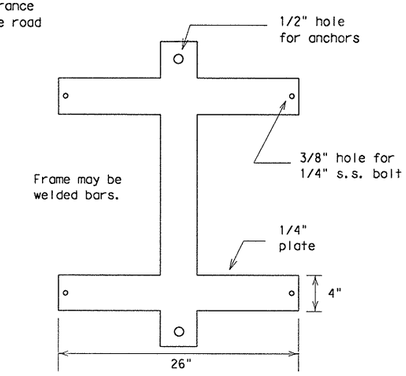

BOTTOM PLATE - TYPE BB

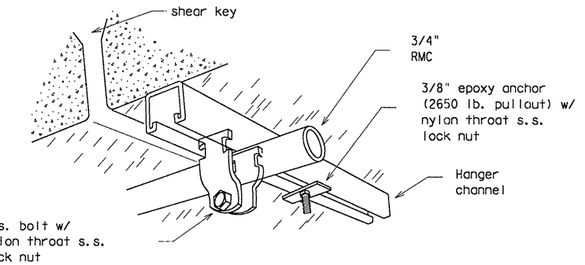

DETAIL "A"
Conduit attachment to box beam
(shown longer than necessary for clarity)

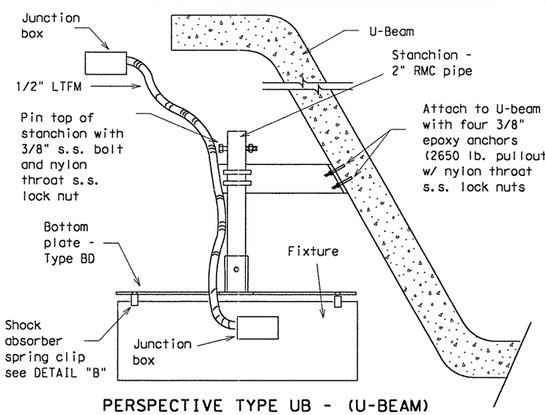

PERSPECTIVE TYPE UB - (U-BEAM)

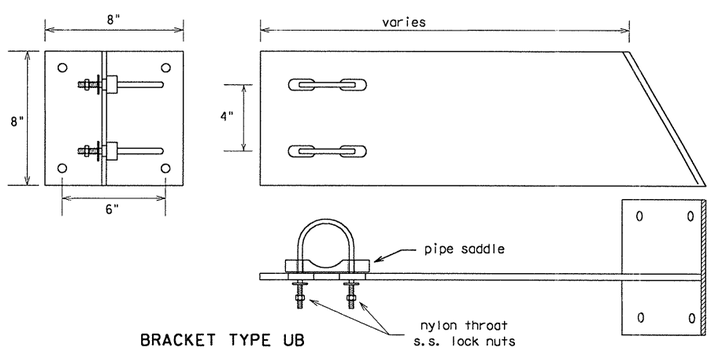

BRACKET TYPE UB
Make from 1/4" plate

GENERAL NOTES:

1. These details apply to Roadway Illumination Assemblies bid under Item 610, "Roadway Illumination Assemblies," under the descriptive code, "Rdwy Ill Assem U/P Type IF." All associated hardware, mounting assemblies, parts, junction boxes, lamps, lenses, brackets, tools and labor required to install the underpass lighting assembly will not be paid for directly but shall be subsidiary to the various items of the contract, except that conduit, and conductors supplying the fixtures will be paid for separately. Mounting channel for conduit supports will not be paid for directly but shall be subsidiary to the various bid items of the contract.
2. See RID (4) for general routing of conduits under bridge structures. New bent caps and columns shall have conduit embedded in concrete. One disconnect switch shall be installed for each group of underpass luminaires at each underpass or as shown on the lighting layout sheets. Disconnect switches shall be mounted on bent cap or header walls as shown on the plans or as directed by the Engineer. Disconnect switches shall be 30 amps, of the voltage rating of the circuit, fused for 20 amps unless shown otherwise on the plans. Disconnect switches shall not be paid for directly but shall be subsidiary to the various items of the contract.
3. Indiscriminate drilling into pre-cast concrete beams will not be allowed. Drill only as shown or as specifically approved by the engineer.
4. Cut stanchion to position fixture even with bottom of beams. Adjust stanchion to seat all the way into the 2 1/2 inch pipe to reduce rattling, then field drill and pin with bolt as shown. Do not oversize hole for pin. Repair cut ends and drilled hole galvanizing with three coats zinc rich paint (dry completely between coats).
5. Hot dip galvanize all steel parts in accordance with Item 445, "Galvanizing."
6. Adjust stanchion for bracket Type WB for vertical stanchion with fixture even with bottom of beam.
7. Fixture shall meet the following requirements.
   a. Fixture shall be a maximum of 28 inches square and 10 inches deep (mounting feet and junction box may extend outside the 28 inch square).
   b. Fixture lamp(s) shall be one 150-watt Osram Sylvania Icetron induction fluorescent or one Philips QL 165 watt induction fluorescent. (240 volt or 120 volt only). External transformers will not be allowed.
   c. Fixture shall be a full cutoff flat glass luminaire emitting a symmetric or asymmetric light pattern. Reflector shall be polished aluminum and shall be at least 95% efficient in reflecting light. Fixture lens retainer shall be positioned so as to not block light emitted from the fixture, i.e. shall not protrude over the reflecting surface.
   d. When operating at 12,000 lumens and when mounted at 15 feet above the midpoint of a circular area, the radius of which is defined below, the fixture shall provide minimum light levels as shown below;
      i. 0.2 foot-candles in a 35 ft radius
      ii. 1.0 one foot-candle in a 22 ft radius
      iii. 2.0 foot-candles in a 19 ft radius
      iv. Maximum of 27.0 foot-candles at any point in a 35ft radius.
   e. Fixture photometrics shall match photometrics of published data.
   f. Housing shall be made from aluminum sheeting (0.10 inch min), stainless steel (14 ga. Min) or cast aluminum. All seams shall be continuously welded. Fixture housing shall be sturdy and of good workmanship. Fixture housing shall have external mounting feet. Housing shall not have any penetrations except that wiring from the external junction box may penetrate to the ballast compartment. Such penetration shall be factory sealed with potting compound or CGB connector. All openings or construction joints in housing shall be effectively sealed.
   g. Lens shall be heat tempered C73 flat glass, minimum 5/32 inch thick. Lens frame shall be sealed with continuous closed cell neoprene (EDPM) or silicon gasket material as approved by the engineer. Gasket shall be a minimum of 9/16 inch wide and 1/8 inch thick. Lens frame shall contact gasket with a minimum 9/16 inch return flange footing. Frame and housing shall have welded seams ground flush to provide flat surface for gasket contact. Lens shall be securely screwed to the housing with a minimum of 8 number 10 stainless steel screws. Screws shall have Teflon, neoprene, or silicon washers. In addition, the lens frame shall be sealed shut at the factory with RTV 501 sealant.
   h. Wire attachment shall be through a junction box rigidly secured to the side of the fixture housing. Junction box shall be a minimum of 3/16 inch thick aluminum (Adelet) or hot dipped galvanized cast iron walls (FD type) and shall have a threaded knockout for 3/4 inch conduit. Wiring entry into fixture shall be sealed with sealing compound in a minimum 1 inch length nipple or by use of a CGB connector when cord is used. Box back wall shall be sealed to the fixture housing with sealant.
   i. Fixtures shall be painted completely inside and outside with gray paint similar in color to "cobra head" luminaires. When other colors are shown on the plans, color shall be as approved by the engineer.
   j. Fixtures shall be certified, in writing, by the lamp manufacturer to be capable of sufficient heat dissipation. Certification shall be submitted for approval with fixture submittal. Icetron lamps shall be supported at each end of the lamp. Lamp manufacturer and fixture manufacturer shall provide a written 60,000-hour life replacement warranty for the fixture/lamp combination for the underpass installation conditions of this project. Lamps/fixture shall be considered failed if light output drops below 60% of rated lumens. Warranty shall be submitted for approval with the fixture submittal.
   k. Only materials, with approved product codes or designations, from prequalified producers are accepted on bids. The Construction Division (CST) of the Texas Department of Transportation (TxDOT) maintains the material producers list of approved producer product codes or designations. Use the following website to view this list:
      http://www.dot.state.tx.us/business/materialproducerlist.htm
      Use of prequalified material does not relieve the contractor of the responsibility to ensure that the material meets specifications. All materials, including those shown on the prequalified material list, may be inspected and tested at any time and may be rejected if not in compliance with the specifications.
   l. All anchors into concrete shall be stainless steel and may be either expansion or epoxy, minimum 1000 lb. pull out, unless otherwise shown.
8. For box beam construction, if 16.5 foot clearance cannot be obtained, see Engineer for alternative underpass lighting.
9. Dimensions of brackets shall be adjusted as necessary to accomodate fixtures being supplied. Use Type BD for double T-beam mounting. Other mounting arrangements may be as approved by the Engineer.

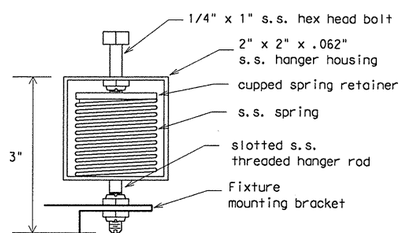

Spring clip shall be installed with three nylon throat s.s. lock nuts.

DETAIL "B"
SHOCK ABSORBER SPRING CLIP
(Hascall-Denke SLH002 or equal)

1/04 Revision

Modify fixture specifications

STANDARD PLANS
Texas Department of Transportation
Traffic Operations Division

ROADWAY ILLUMINATION DETAILS

RID(5)-04

© TxDOT June 2002			DN: KB	CK: KB	DW: FDN	CK: CAL
REVISIONS 1-04	STATE DISTRICT	FEDERAL REGION	FEDERAL AID PROJECT			SHEET
	AUS	6	CC 337-1-29			175
	COUNTY		CONTROL	SECTION	JOB	HIGHWAY
	WILLIAMSON		0337	01	029	SH 29

...\signals\rid2004.dgn 09/21/2004 09:43:59 AM

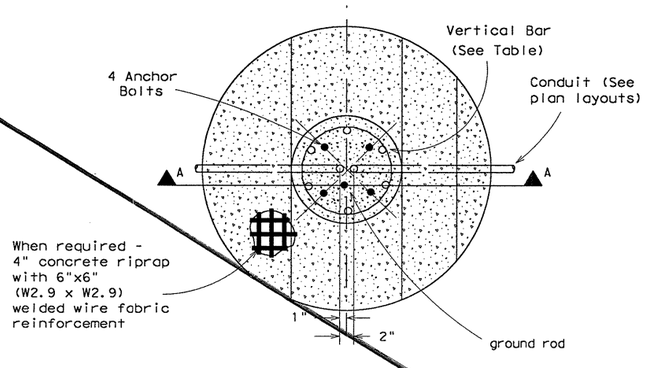

FOUNDATION DETAIL

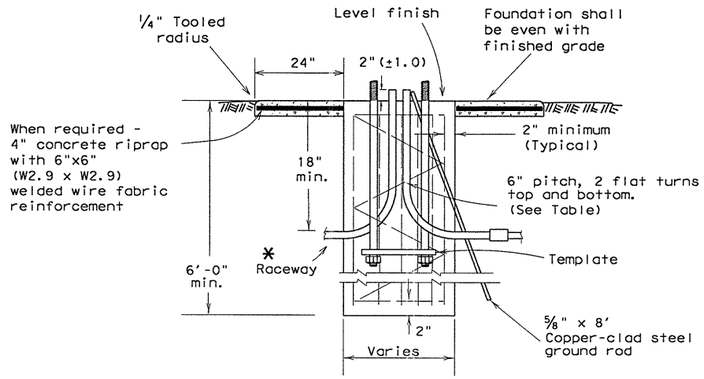

* For duct cable, match duct size, see ED(10)-. For conductor in conduit system, same size as system conduit with standard radius bends.

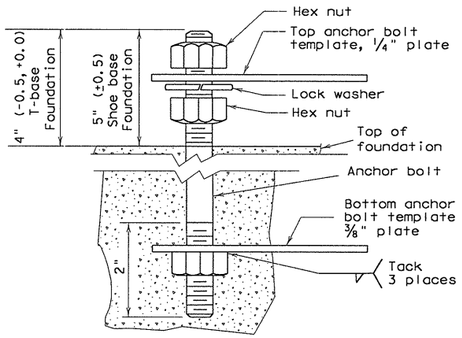

ANCHOR BOLT DETAIL

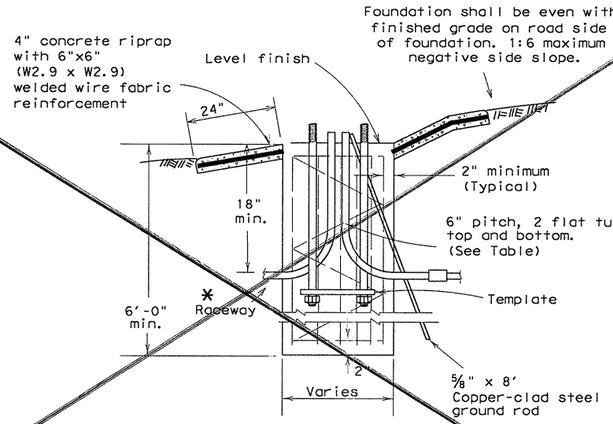

SECTION A-A

Breakaway Pole Placement, see note 5	
Roadway Functional Classification	** Pole Offset (distance to transformer base, tolerance + 6in. -0in.)
Freeway mainlanes (roadways with full control of access)	15 ft (minimum and typical) from lane edge
All curbed, 45 mph or less design speed	2.5 ft minimum (15 ft desirable) from curb face
All others	10 ft minimum* (15 ft desirable) from lane edge

*or as close to ROW line as is practicable

**all breakaway poles should have 2/5 of the luminaire mounting height behind the pole for "falling area" to prevent encroachment on other travel lanes. See design guidelines.

FOUNDATIONS				
FND. TYPE	DRILL SHAFT		REINFORCING	
	DIA.	LENGTH	BAR	SPIRAL
A	30 in	6 ft	6-#4	#2 or 3
B	30 in	8 ft	6-#5	#2 or 3
C	30 in	10 ft	6-#6	#3

BOLT CIRCLES AND ANCHOR BOLTS				
MOUNTING HEIGHT	POLE BASE PLATE	BOLT CIRCLE		BOLT SIZE
		SHOE BASE	*T-BASE	
LESS THAN 40 ft	13 in	13 in	14 in	1 in. X 30 in.
40 ft OR GREATER	15 in	15 in	17 1/4 in	** 1 1/4 in. X 30 in.

* AND X-BASE
** 1" FOR X-BASE

PAY QUANTITY OF RIPRAP PER FOUNDATION (Install only when shown on the plans.)		
FOUNDATION DIAMETER	RIPRAP DIAMETER	RIPRAP (CONC) (CL A)
30 in.	78 in.	0.35 CY

ROADWAY ILLUMINATION ASSEMBLY FOUNDATIONS

1. Foundations will be paid for under the Item "Foundations for Signs, Traffic Signals and Roadway Illumination Assemblies", unless otherwise shown on the plans. Top 6 inches of foundation shall be formed and struck level.
2. Anchor bolts for all poles, except CTB-mounted poles, shall be A-36M55 Anchor Bolts. Anchor bolts for CTB mounted poles shall be steel, ASTM A-325 or A-321 threaded rod. Nuts for CTB anchor bolts shall be ASTM A-563 Grade D heavy hex, galvanized. The top 8 inches of all anchor bolts shall be galvanized per ASTM A-153. Anchor bolts in foundations shall be 1 1/4 inches x 30 inches for mounting heights 40 feet and greater, 1 inch x 30 inches for mounting heights less than 40 feet.* Anchor bolts shall have top end threaded not less than 5 inches and furnished with galvanized hex nuts, 1/2 inch flat washers (T-base), lock washers (shoe base) and template. The lower end of the bolt shall be threaded and furnished with nut and template. When bolts with rolled threads are furnished, bolt body need not be full size. See CTB and SSCB details for anchor bolts in concrete traffic barriers. Anchor bolts and nuts shall have Class 2A and 2B fit. Nuts shall be tapped and chased after galvanizing.
3. Concrete shall be Class A or C.
4. A minimum of two conduits shall be installed in each foundation. See lighting layout sheets for locations of foundations with more than two conduits. Any unused conduits in foundations shall be capped on both ends.
5. Unless otherwise dimensioned on the plans, breakaway roadway illumination assemblies should be located as shown in the placement table. Non-breakaway illumination assemblies should be protected from vehicular impact (i.e. 2 feet behind guard rail or mounted atop traffic barrier) or located outside the clear zone, except that 2.5 feet from curb face is minimum desired for light poles on city streets, 45 mph or less, see design guidelines for further information.
6. Anchor bolt template shall not be supplied with flat washers. Transformer base shall be held with 1/2 inch thick washers supplied with base. No washers or shims shall be used under transformer base.
7. Riprap shall be placed around the foundtion when called for elsewhere in the plans.
8. Conduit location in foundation is critical for new style breakaway devices. Conduits shall be placed 2 inches apart on centerline as shown in foundation details.

* Except that anchor bolts shall be 1 inch x 30 inches for all X-base poles.

1/04 Revision

Modify fixture specifications

STANDARD PLANS
Texas Department of Transportation
Traffic Operations Division

ROADWAY ILLUMINATION DETAILS

RID(6)-04

©TxDOT January 1992	DN: KB	CK: KB	DW: FDN	CK: CAL

REVISIONS	STATE DISTRICT	FEDERAL REGION	FEDERAL AID PROJECT	SHEET
10-93 2-94 10-98 1-04	AUS	6	CC 337-1-29	176

COUNTY	CONTROL	SECTION	JOB	HIGHWAY
WILLIAMSON	0337	01	029	SH 29

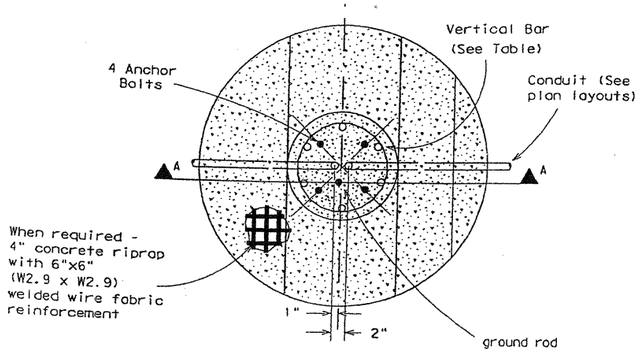

FOUNDATION DETAIL

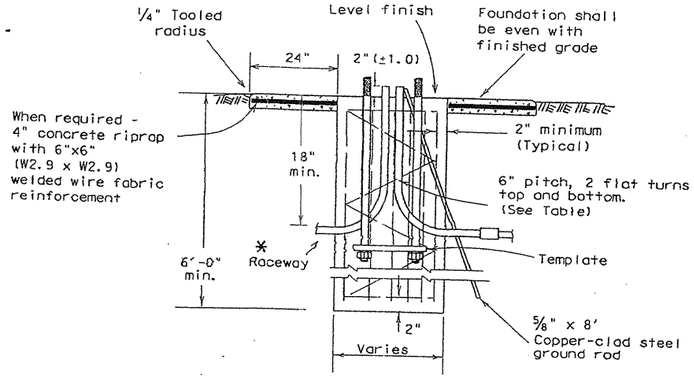

* For duct cable, match duct size, see ED(10). For conductor in conduit system, same size as system conduit with standard radius bends.

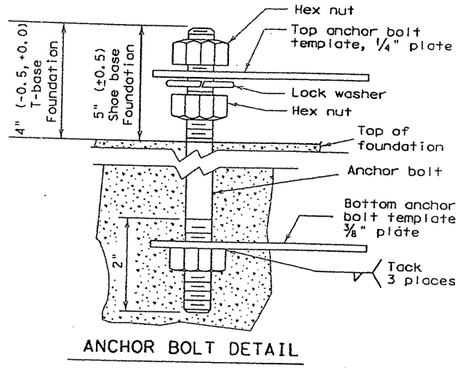

ANCHOR BOLT DETAIL

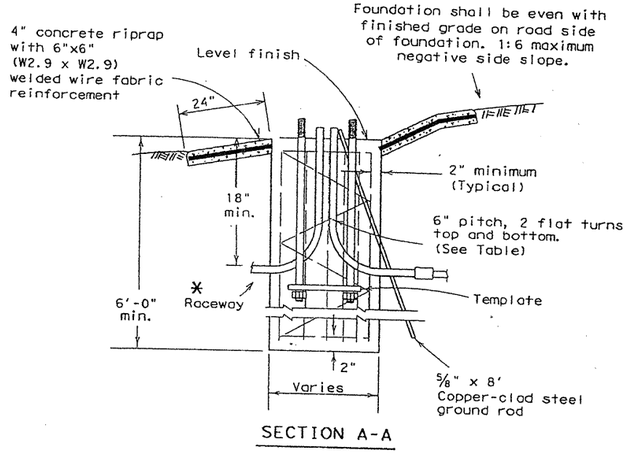

SECTION A-A

ROADWAY ILLUMINATION ASSEMBLY FOUNDATIONS

1. Foundations will be paid for under the Item "Foundations for Signs, Traffic Signals and Roadway Illumination Assemblies", unless otherwise shown on the plans. Top 6 inches of foundation shall be formed and struck level.
2. Anchor bolts for all poles, except CTB-mounted poles, shall be A-36M55 Anchor Bolts. Anchor bolts for CTB mounted poles shall be steel, ASTM A-325 or A-321 threaded rod. Nuts for CTB anchor bolts shall be ASTM A-563 Grade D heavy hex, galvanized. The top 8 inches of all anchor bolts shall be galvanized per ASTM A-153. Anchor bolts in foundations shall be 1 1/4 inches x 30 inches for mounting heights 40 feet and greater, 1 inch x 30 inches for mounting heights less than 40 feet.* Anchor bolts shall have top end threaded not less than 5 inches and furnished with galvanized hex nuts, 1/2 inch flat washers (T-base), lock washers (shoe base) and template. The lower end of the bolt shall be threaded and furnished with nut and template. When bolts with rolled threads are furnished, bolt body need not be full size. See CTB and SSCB details for anchor bolts in concrete traffic barriers. Anchor bolts and nuts shall have Class 2A and 2B fit. Nuts shall be tapped and chased after galvanizing.
3. Concrete shall be Class A or C.
4. A minimum of two conduits shall be installed in each foundation. See lighting layout sheets for locations of foundations with more than two conduits. Any unused conduits in foundations shall be capped on both ends.
5. Unless otherwise dimensioned on the plans, breakaway roadway illumination assemblies should be located as shown in the placement table. Non-breakaway illumination assemblies should be protected from vehicular impact (i.e. 2 feet behind guard rail or mounted atop traffic barrier) or located outside the clear zone, except that 2.5 feet from curb face is minimum desired for light poles on city streets, 45 mph or less, see design guidelines for further information.
6. Anchor bolt template shall not be supplied with flat washers. Transformer base shall be held with 1/2 inch thick washers supplied with base. No washers or shims shall be used under transformer base.
7. Riprap shall be placed around the foundtion when called for elsewhere in the plans.
8. Conduit location in foundation is critical for new style breakaway devices. Conduits shall be placed 2 inches apart on centerline as shown in foundation details.

* Except that anchor bolts shall be 1 inch x 30 inches for all X-base poles.

Breakaway Pole Placement, see note 5	
Roadway Functional Classification	** Pole Offset (distance to transformer base, tolerance + 6in. -0in.)
Freeway mainlanes (roadways with full control of access)	15 ft (minimum and typical) from lane edge
All curbed, 45 mph or less design speed	2.5 ft minimum (15 ft desirable) from curb face
All others	10 ft minimum* (15 ft desirable) from lane edge

*or as close to ROW line as is practicable

**all breakaway poles should have 2/5 of the luminaire mounting height behind the pole for "falling area" to prevent encroachment on other travel lanes. See design guidelines.

30" Drill Shaft →

FOUNDATIONS				
FND. TYPE	DRILL SHAFT DIA.	DRILL SHAFT LENGTH	REINFORCING BAR	REINFORCING SPIRAL
A	30 in	6 ft	6-#4	#2 or 3
B	30 in	8 ft	6-#5	#2 or 3
C	30 in	10 ft	6-#6	#3

BOLT CIRCLES AND ANCHOR BOLTS				
MOUNTING HEIGHT	POLE BASE PLATE	BOLT CIRCLE SHOE BASE	BOLT CIRCLE *T-BASE	BOLT SIZE
LESS THAN 40 ft	13 in	13 in	14 in	1 in. X 30 in.
40 ft OR GREATER	15 in	15 in	17¼ in	** 1¼ in. X 30 in.

* AND X-BASE
** 1" FOR X-BASE

PAY QUANTITY OF RIPRAP PER FOUNDATION (Install only when shown on the plans.)		
FOUNDATION DIAMETER	RIPRAP DIAMETER	RIPRAP (CONC) (CL A)
30 in.	78 in.	0.35 CY

C.O. #9

1/04 Revision

Modify fixture specifications

STANDARD PLANS
Texas Department of Transportation
Traffic Operations Division

ROADWAY ILLUMINATION DETAILS

RID(6)-04

©TxDOT January 1992

DGN - KB	CKD - KB	DWN - FDN	CK - CAL

REVISIONS	STATE DISTRICT	FEDERAL AID PROJECT	SHEET
10-93	AUS	6	CC 337-1-29	176
2-94			
10-98	COUNTY	CONTROL	SECTION	JOB	HIGHWAY
1-04	WILLIAMSON	0337	01	029	SH 29

Arm Length	ROUND POLES					POLYGONAL POLES					Foundation Type
	D_B	D_{19}	D_{24}	D_{30}	① thk	D_B	D_{19}	D_{24}	D_{30}	① thk	
ft.	in.	in.	in.	in.	in.	in.	in.	in.	in.	in.	
20	10.5	7.8	7.1	6.3	.179	11.5	8.5	7.7	6.8	.179	30-A
24	11.0	8.3	7.6	6.8	.179	12.0	9.0	8.2	7.3	.179	30-A
28	11.5	8.8	8.1	7.3	.179	12.5	9.5	8.7	7.8	.179	30-A
32	12.5	9.8	9.1	8.3	.179	12.0	9.0	8.2	7.3	.239	30-A
36	12.0	9.3	8.6	7.8	.239	12.5	9.5	8.7	7.8	.239	36-A
40	12.0	9.3	8.6	7.8	.239	13.5	10.5	9.7	8.8	.239	36-A
44	12.5	9.8	9.1	8.3	.239	14.0	11.0	10.2	9.3	.239	36-A
48	13.0	10.3	9.6	8.8	.239	15.0	12.0	11.2	10.3	.239	36-A

Arm Length	ROUND ARMS					POLYGONAL ARMS				
	L_1	D_1	D_2	① thk	Rise	L_1	D_1	② D_2	① thk	Rise
ft.	ft.	in.	in.	in.		ft.	in.	in.	in.	
20	19.1	6.5	3.8	.179	1'-9"	19.1	7.0	3.5	.179	1'-8"
24	23.1	7.5	4.3	.179	1'-10"	23.1	7.5	3.5	.179	1'-9"
28	27.1	8.0	4.2	.179	1'-11"	27.1	8.0	3.5	.179	1'-10"
32	31.0	9.0	4.7	.179	2'-1"	31.0	9.0	3.5	.179	2'-0"
36	35.0	9.5	4.6	.179	2'-4"	35.0	10.0	3.5	.179	2'-1"
40	39.0	9.5	4.1	.239	2'-8"	39.0	9.5	3.5	.239	2'-3"
44	43.0	10.0	4.1	.239	2'-11"	43.0	10.0	3.5	.239	2'-6"
48	47.0	10.5	4.1	.239	3'-4"	47.0	11.0	3.5	.239	2'-9"

D_B = Pole Base O.D.
D_{19} = Pole Top O.D. with no Luminaire and no ILSN
D_{24} = Pole Top O.D. with ILSN w/out Luminaire
D_{30} = Pole Top O.D. with Luminaire
D_1 = Arm Base O.D.
D_2 = Arm End O.D.
L_1 = Shaft Length
L = Nominal Arm Length

① Thickness shown are minimums, thicker materials may be used.

② D_2 may be increased by up to 1" for polygonal arms.

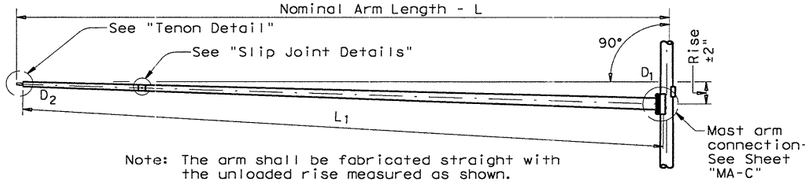

Note: The arm shall be fabricated straight with the unloaded rise measured as shown.

TRAFFIC SIGNAL ARM

(Fixed Mount)

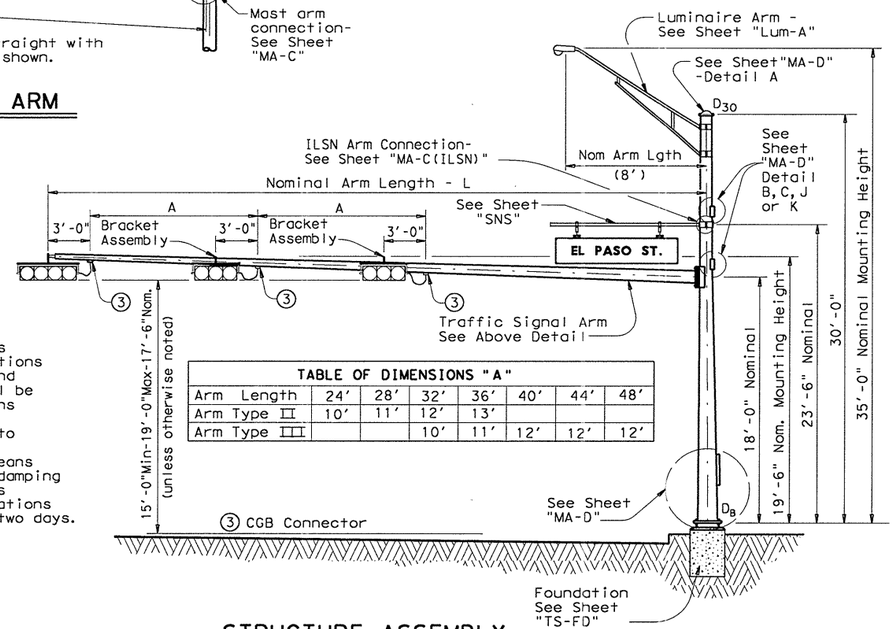

TABLE OF DIMENSIONS "A"							
Arm Length	24'	28'	32'	36'	40'	44'	48'
Arm Type II	10'	11'	12'	13'			
Arm Type III			10'	11'	12'	12'	12'

STRUCTURE ASSEMBLY

VIBRATION WARNING

Mast Arms of approximately 40' or longer are subject to possible harmonic vertical vibrations in light wind conditions due to unusual combinations of signal numbers, weights or positions, arm-wind orientation, and arm-pole stiffness. Arms shall be visually inspected in 5 to 20 mph wind conditions after signal head installation and, if vertical movements with a total excursion (max positive to max negative) of more than approximately 8" are observed at arm tip, damping devices or other means shall be fitted to the arm(s). The necessary damping device(s) or other remedial measures shall be as recommended by the fabricator. Excessive vibrations shall not be allowed to continue for more than two days.

SHIPPING PARTS LIST

Ship each pole with the following attached: enlarged hand hole, pole cap, fixed-arm connection bolts and washers and any additional hardware listed in the table.

Nominal Arm Length	30' Poles With Luminaire		24' Poles With ILSN		19' Poles With No Luminaire and No ILSN	
	Above hardware plus: One (or two if ILSN attached) small hand hole, clamp-on simplex		Above hardware plus one small hand hole		See note above	
ft	Designation	Quantity	Designation	Quantity	Designation	Quantity
20	20L-80		20S-80		20-80	
24	24L-80		24S-80		24-80	
28	28L-80		28S-80		28-80	
32	32L-80		32S-80		32-80	
36	36L-80		36S-80		36-80	
40	40L-80		40S-80		40-80	
44	44L-80		44S-80		44-80	
48	48L-80		48S-80		48-80	

Traffic Signal Arms (1 per Pole) Ship each arm with the listed equipment attached

Nominal Arm Length	Type I Arm (1 Signal)		Type II Arm (2 Signals)		Type III Arm (3 Signals)	
	1 CGB connector		1 Bracket Assembly and 2 CGB Connectors ④		2 Bracket Assemblies and 3 CGB Connectors ④	
ft	Designation	Quantity	Designation	Quantity	Designation	Quantity
20	20I-80					
24	24I-80		24II-80			
28	28I-80		28II-80			
32			32II-80		32III-80	
36			36II-80		36III-80	
40					40III-80	
44					44III-80	
48					48III-80	

Luminaire Arms (1 per 30' pole)

Nominal Arm Length	Quantity
8' Arm	

④ Supply Option "A" unless otherwise noted

ILSN Arm (Max. 2 per pole) Ship with clamps, bolts and washers

Nominal Arm Length	Quantity
7' Arm	
9' Arm	

Anchor Bolt Assemblies (1 per pole)

Anchor Bolt Diameter	Anchor Bolt Length	Quantity
1 ½"	3'-4"	
1 ¾"	3'-10"	

Each anchor bolt assembly consists of the following: Top and Bottom templates, 4 anchor bolts, 8 nuts, 8 flat washers, 4 lock washers and 4 nut anchor devices (Type 2) per Standard Drawing "TS-FD".

Templates may be removed for shipment.

11/99 Revision

⚠1 Changed to Facilitate new terminal strip enclosure

Texas Department of Transportation
Traffic Operations Division

TRAFFIC SIGNAL SUPPORT STRUCTURES

SINGLE MAST ARM ASSEMBLY

(80 MPH WIND ZONE)

SMA-80(1)-99

FILE: SMA-80.DGN	DN: MS	CK: JSY	DW: MMF	CK: JSY
©TxDOT August 1995	DIST	FED REG	FEDERAL AID PROJECT #	SHEET
REVISIONS 5-96 11-99	AUS	6	CC 337-1-29	177
	COUNTY		CONTROL	SECT	JOB	HIGHWAY
	WILLIAMSON		0337	01	029	SH 29

...\signals\sma-80.dgn 09/21/2004 09:43:59 AM

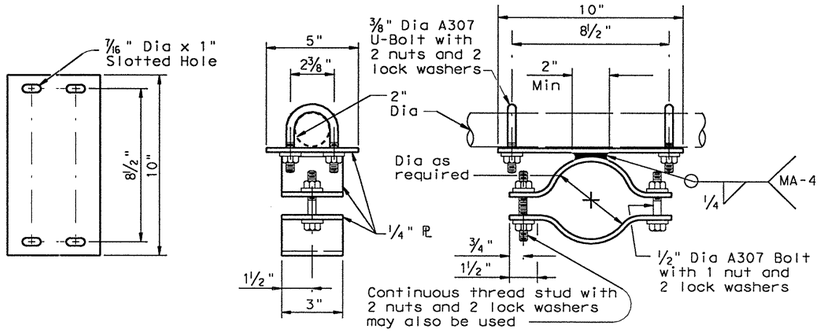

BRACKET ASSEMBLY DETAILS OPTION A

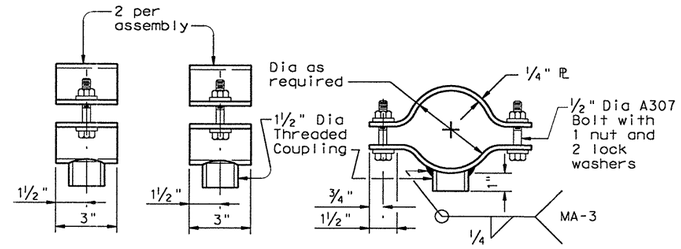

BRACKET ASSEMBLY DETAILS OPTION B

Stainless steel bands and cast bracket as in "Astro-Brac" with 1½" Dia Threaded Coupling.

BRACKET ASSEMBLY OPTION C

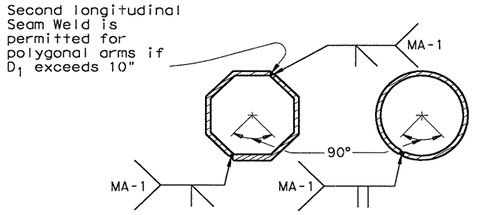

ARM WELD DETAIL

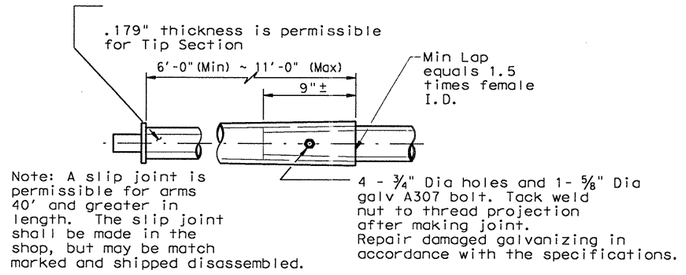

SLIP JOINT DETAIL

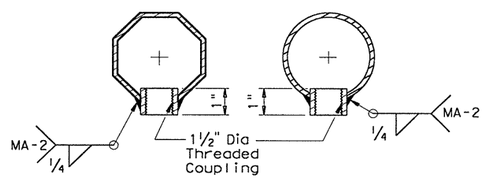

COUPLING DETAILS

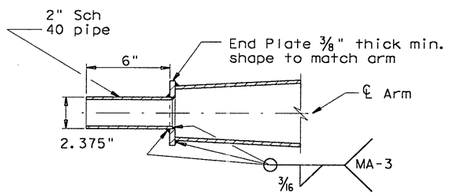

TENON DETAIL

GENERAL NOTES:

Design conforms to 1994 AASHTO Standard Specifications for Structural Supports for Highway Signs, Luminaires, and Traffic Signals and Interim Specifications thereto. Design Wind Speed equals 80 mph plus a 1.3 gust factor.

Poles are designed to support one 8'-0" luminaire arm, one 9'-0" internally lighted street name sign and one traffic signal arm with a length as tabulated. The specified luminaire load applied at the end of the luminaire arm equals 75 lbs vertical dead load plus the horizontal wind load on an effective projected area of 1.5 sq ft. The specified internally lighted street name sign load applied 4.5 ft from the centerline of the pole equals 85 lbs vertical dead load plus horizontal wind load on an effective projected area of 11.5 sq ft. The specified signal load applied at the end of the traffic signal arm equals 180 lbs vertical dead load plus the horizontal wind load on an effective projected area of 32.4 sq ft (actual area times drag coefficient).

See Standard Sheet "MA-D" for pole details, "MA-C" for traffic signal arm connection details, "MA-C (ILSN)" for internally lighted street name sign arm connection details, "LUM-A" for luminaire arm and connection details, "SNS" for internally lighted street name sign details, and "TS-FD" for anchor bolt and foundation details. See "MA-C" for material specifications.

Fabrication shall be in accordance with the Specifications and with the details, dimensions, and weld procedures shown herein. Weld references call for preapproved weld procedures which the Fabricator must obtain prior to fabrication. Miscellaneous welds which do not call for preapproved weld procedures are nevertheless subject to rejection for poor workmanship. Materials, fabrication tolerances, and shipping practices shall meet the requirements of this sheet and the Specifications.

Unless otherwise noted, all parts shall be galvanized in accordance with the Specifications.

Special design require submission of shop drawings in accordance with the item "Steel Structures".

Texas Department of Transportation
Traffic Operations Division

TRAFFIC SIGNAL SUPPORT STRUCTURES

SINGLE MAST ARM ASSEMBLY

(80 MPH WIND ZONE)

SMA-80(2)-96

FILE: SMA-80.DGN	DN: MS	CK: JSY	DW: MMF	CK: JSY
© TxDOT August 1995	DIST	FED REG	FEDERAL AID PROJECT #	SHEET
REVISIONS	AUS	6	CC 337-1-29	178
5-96	COUNTY		CONTROL	SECT	JOB	HIGHWAY
	WILLIAMSON		0337	01	029	SH 29

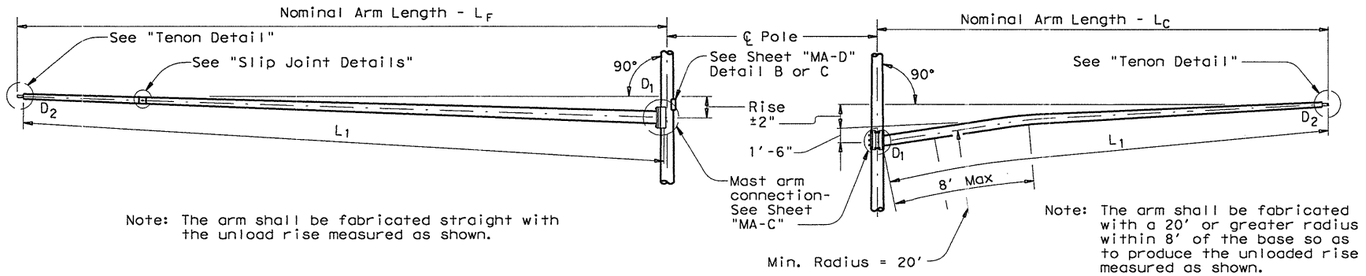

Note: The arm shall be fabricated straight with the unload rise measured as shown.

Note: The arm shall be fabricated with a 20' or greater radius within 8' of the base so as to produce the unloaded rise measured as shown.

FIXED MOUNT TRAFFIC SIGNAL ARM

CLAMP-ON TRAFFIC SIGNAL ARM

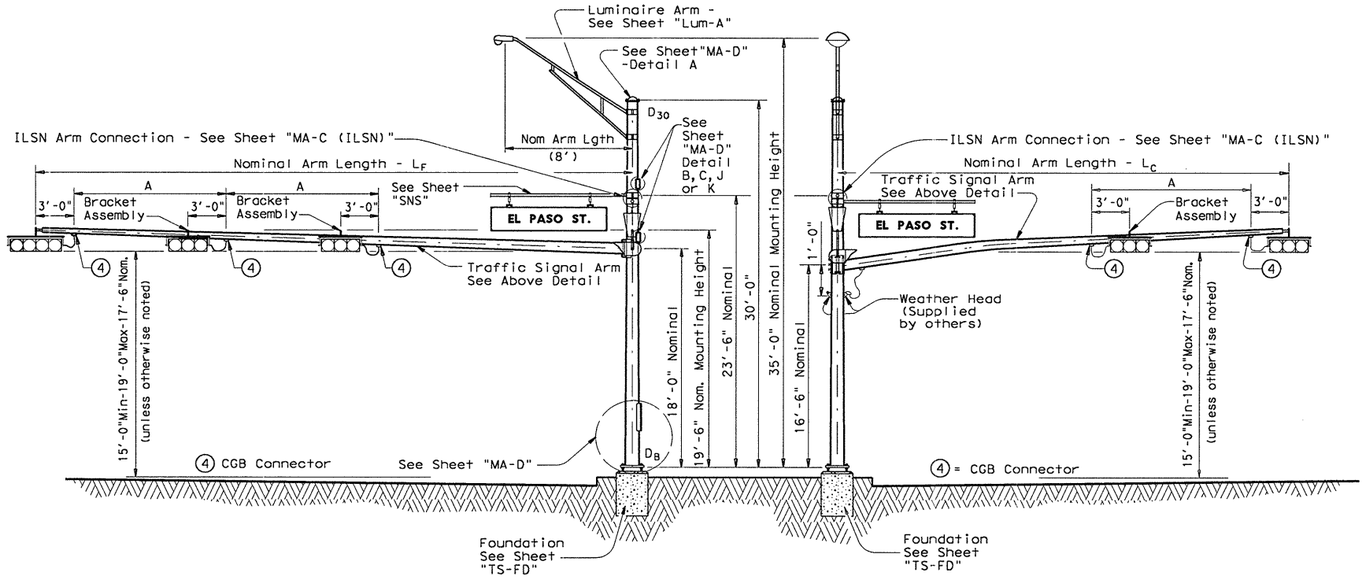

ELEVATION
(Showing fixed mount arm)

STRUCTURE ASSEMBLY

ELEVATION
(Showing clamp mount arm)

TABLE OF DIMENSIONS "A"						
Arm Length	24'	28'	32'	36'	40'	44'
Arm Type II	10'	11'	12'	13'		
Arm Type III			10'	11'	12'	12'

VIBRATION WARNING

Mast Arms of approximately 40'-0" or longer are subject to possible harmonic vertical vibrations in light wind conditions due to unusual combinations of signal numbers, weights or positions, arm-wind orientation, and arm-pole stiffness.

Arms shall be visually inspected in 5 to 20 mph wind conditions after signal head installation and, if vertical movements with a total excursion (max positive to max negative) of more than approximately 8" are observed at arm tip, damping devices or other means shall be fitted to the arm(s).

The necessary damping device(s) or other remedial measures shall be as recommended by the fabricator. Excessive vibrations shall not be allowed to continue for more than two days.

GENERAL NOTES:

Design conforms to 1994 AASHTO Standard Specifications for Structural Supports for Highway Signs, Luminaires, and Traffic Signals and Interim Specifications thereto. Design Wind Speed equals 80 mph plus a 1.3 gust factor. Designs are based on an arm included angle of 90 degrees or more. Angles of less than approximately 75 degrees will require a special design.

Poles are designed to support one 8'-0" luminaire arm, two 9'-0" internally lighted street name signs and two traffic signal arms with length combinations as tabulated. The specified luminaire load applied at the end of luminaire arm equals 75 lbs vertical dead load plus the horizontal wind load on an effective projected area of 1.5 sq ft. The specified internally lighted street name sign applied 4'-6" from the centerline of the pole equals 85 lbs vertical dead load plus the horizontal wind load on an effective projected area of 11.5 sq ft. The specified signal load applied at the end of the traffic signal arm equals 180 lbs vertical dead load plus the horizontal wind load on an effective projected area of 32.4 sq ft (actual area times drag coefficient).

See Standard Sheet "MA-D" for pole details, "MA-C" for traffic signal arm connection details, "MA-C (ILSN)" for internally lighted street name sign arm connection details, "LUM-A" for luminaire arm and connection details, "SNS" for internally lighted street name sign details, and "TS-FD" for anchor bolt and foundation details. See "MA-C" for material specifications.

Fabrication shall be in accordance with the Specifications and with the details, dimensions, and weld procedures shown herein. Weld references call for preapproved weld procedures which the Fabricator must obtain prior to fabrication. Miscellaneous welds which do not call for preapproved weld procedures are nevertheless subject to rejection for poor workmanship. Material, fabrication tolerances, and shipping practices shall meet the requirements of this sheet and the Specifications.

Unless otherwise noted, all parts shall be galvanized in accordance with the Specifications.

Special designs require submission of shop drawings in accordance with the item "Steel Structures".

Texas Department of Transportation
Traffic Operations Division

TRAFFIC SIGNAL SUPPORT STRUCTURES

DUAL MAST ARM ASSEMBLY

(80 MPH WIND ZONE)

DMA-80 (1)-96

FILE: DMA-80.DGN	DN: MS	CK: JSY	DW: MMF	CK: JSY
©TxDOT August 1995	DIST	FED REG	FEDERAL AID PROJECT #	SHEET
REVISIONS 5-96	AUS	6	CC 337-1-29	179
	COUNTY		CONTROL SECT JOB	HIGHWAY
	WILLIAMSON		0337 01 029	SH 29

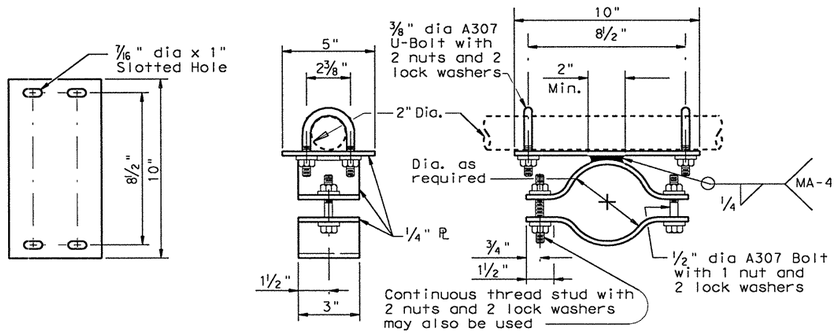

BRACKET ASSEMBLY DETAILS OPTION A

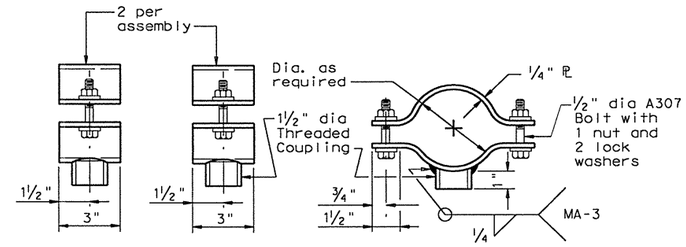

BRACKET ASSEMBLY DETAILS OPTION B

Stainless steel bands and cast bracket as in "Astro-Brac" with 1½" dia Threaded Coupling.

BRACKET ASSEMBLY DETAILS OPTION C

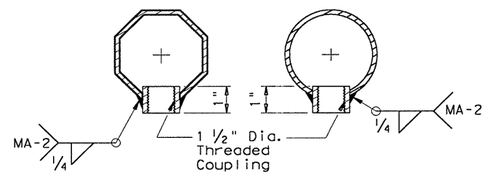

COUPLING DETAILS

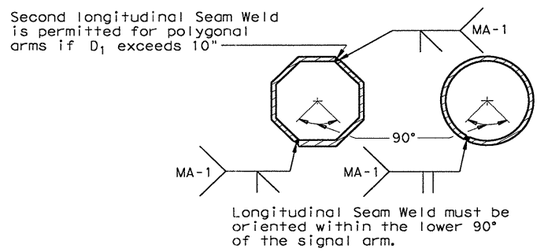

ARM WELD DETAIL

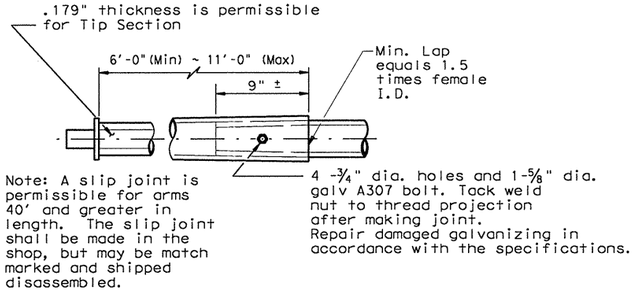

SLIP JOINT DETAIL

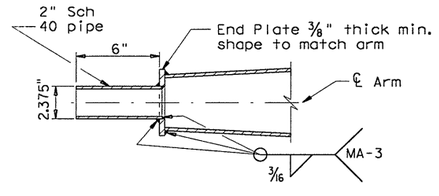

TENON DETAIL

Texas Department of Transportation
Traffic Operations Division

TRAFFIC SIGNAL SUPPORT STRUCTURES

DUAL MAST ARM ASSEMBLY

(80 MPH WIND ZONE)

DMA-80 (2)-96

FILE: DMA-80.DGN	DN: MS		CK: JSY		DW: MMF		CK: JSY		
©TxDOT August 1995	DIST	FED REG	FEDERAL AID PROJECT #					SHEET	
REVISIONS	AUS	6	CC 337-1-29					180	
5-96	COUNTY			CONTROL	SECT	JOB	HIGHWAY		
	WILLIAMSON			0337	01	029	SH 29		

SHIPPING PARTS LIST

Ship each pole with the following attached: enlarged hand hole, pole cap, fixed arm connection bolts and washers and any additional hardware listed in the table.

Nominal Arm Length		30' Poles With Luminaire		24' Poles With ILSN		19' Poles With no Luminaire and no ILSN	
		See note above plus: one (or two if ILSN attached) small hand hole, clamp-on simplex		See note above plus one small hand hole		See note above	
LF	Lc						
ft.	ft.	Designation	Quantity	Designation	Quantity	Designation	Quantity
20	20	2020L-80		2020S-80		2020-80	
24	20	2420L-80		2420S-80		2420-80	
	24	2424L-80		2424S-80		2424-80	
28	20	2820L-80		2820S-80		2820-80	
	24	2824L-80		2824S-80		2824-80	
	28	2828L-80		2828S-80		2828-80	
32	20	3220L-80		3220S-80		3220-80	
	24	3224L-80		3224S-80		3224-80	
	28	3228L-80		3228S-80		3228-80	
	32	3232L-80		3232S-80		3232-80	
36	20	3620L-80		3620S-80		3620-80	
	24	3624L-80		3624S-80		3624-80	
	28	3628L-80		3628S-80		3628-80	
	32	3632L-80		3632S-80		3632-80	
	36	3636L-80		3636S-80		3636-80	
40	20	4020L-80		4020S-80		4020-80	
	24	4024L-80		4024S-80		4024-80	
	28	4028L-80		4028S-80		4028-80	
	32	4032L-80		4032S-80		4032-80	
	36	4036L-80		4036S-80		4036-80	
44	20	4420L-80		4420S-80		4420-80	
	24	4424L-80		4424S-80		4424-80	
	28	4428L-80		4428S-80		4428-80	
	32	4432L-80		4432S-80		4432-80	
	36	4436L-80		4436S-80		4436-80	

Traffic Signal Arms (Fixed Mount) (1 per pole) Ship each arm w/ the listed equipment attached

Nominal Arm Length	Type I Arm (1 Signal) 1 CGB connector		Type II Arm (2 Signals) 1 Bracket Assembly ① and 2 CGB Connectors		Type III Arm (3 Signals) 2 Bracket Assemblies ① and 3 CGB Connectors	
ft.	Designation	Quantity	Designation	Quantity	Designation	Quantity
20	20I-80					
24	24I-80		24II-80			
28	28I-80		28II-80			
32			32II-80		32III-80	
36			36II-80		36III-80	
40					40III-80	
44					44III-80	

Traffic Signal Arms (Clamp-On Mount) (1 per pole) Ship each arm w/ the listed equipment attached

Nominal Arm Length	Type I Arm (1 Signal) 2 CGB connector and 1 clamp w/bolts and washers		Type II Arm (2 Signals) 1 Bracket Assembly ①, 3 CGB Connectors, and 1 clamp w/bolts and washers		Type III Arm (3 Signals) 2 Bracket Assemblies ①, 4 CGB Connectors, and 1 clamp w/bolts and washers	
ft.	Designation	Quantity	Designation	Quantity	Designation	Quantity
20	20I-80					
24	24I-80		24II-80			
28	28I-80		28II-80			
32			32II-80		32III-80	
36			36II-80		36III-80	

Luminaire Arms (1 per 30' pole)

Nominal Arm Length	Quantity
8' Arm	

ILSN Arm (1 or 2 per pole) ship with clamps, bolts and washers

Nominal Arm Length	Quantity
7' Arm	
9' Arm	

Anchor Bolt Assemblies (1 per pole)

Anchor Bolt Diameter	Anchor Bolt Length	Quantity
1 ½"	3'-4"	
1 ¾"	3'-10"	
2"	4'-3"	

Each anchor bolt assembly consists of the following: Top and Bottom templates, 4 anchor bolts, 8 nuts, 8 flat washers, 4 lock washers and 4 nut anchor devices (Type 2) per Standard Drawing "TS-FD".

Templates may be removed for shipment.

① Supply Option "A" unless otherwise noted

ARMS		ROUND POLES					POLYGONAL POLES					Foundation Type
LF	Lc	D_B	D_{19}	D_{24}	D_{30}	②thk	D_B	D_{19}	D_{24}	D_{30}	②thk	
ft.	ft.	in.	in.	in.	in.	in.	in.	in.	in.	in.	in.	
20	20	11.5	8.8	8.1	7.3	.179	12.5	9.5	8.7	7.8	.179	30-A
24	20	12.0	9.3	8.6	7.8	.179	13.0	10.0	9.2	8.3	.179	30-A
	24	12.0	9.3	8.6	7.8	.179	13.0	10.0	9.2	8.3	.239	30-A
28	20	12.5	9.8	9.1	8.3	.179	12.0	9.0	8.2	7.3	.239	30-A
	24	12.5	9.8	9.1	8.3	.179	12.0	9.0	8.2	7.3	.239	30-A
	28	13.0	10.3	9.6	8.8	.179	12.5	9.5	8.7	7.8	.239	30-A
32	20	13.0	10.3	9.6	8.8	.179	12.5	9.5	8.7	7.8	.239	30-A
	24	13.0	10.3	9.6	8.8	.179	12.5	9.5	8.7	7.8	.239	30-A
	28	12.0	9.3	8.6	7.8	.239	13.0	10.0	9.2	8.3	.239	30-A
	32	12.0	9.3	8.6	7.8	.239	13.5	10.5	9.7	8.8	.239	36-A
36	20	12.0	9.3	8.6	7.8	.239	13.5	10.5	9.7	8.8	.239	36-A
	24	12.0	9.3	8.6	7.8	.239	13.5	10.5	9.7	8.8	.239	36-A
	28	12.5	9.8	9.1	8.3	.239	13.5	10.5	9.7	8.8	.239	36-A
	32	12.5	9.8	9.1	8.3	.239	13.5	10.5	9.7	8.8	.239	36-A
	36	12.5	9.8	9.1	8.3	.239	14.0	11.0	10.2	9.3	.239	36-A
40	20	12.5	9.8	9.1	8.3	.239	14.0	11.0	10.2	9.3	.239	36-A
	24	12.5	9.8	9.1	8.3	.239	14.0	11.0	10.2	9.3	.239	36-A
	28	13.0	10.3	9.6	8.8	.239	14.0	11.0	10.2	9.3	.239	36-A
	32	13.0	10.3	9.6	8.8	.239	15.0	12.0	11.2	10.3	.239	36-A
	36	13.5	10.8	10.1	9.3	.239	15.0	12.0	11.2	10.3	.239	36-A
44	20	13.5	10.8	10.1	9.3	.239	15.0	12.0	11.2	10.3	.239	36-A
	24	13.5	10.8	10.1	9.3	.239	15.0	12.0	11.2	10.3	.239	36-A
	28	13.5	10.8	10.1	9.3	.239	15.0	12.0	11.2	10.3	.239	36-A
	32	14.0	11.3	10.6	9.8	.239	15.5	12.5	11.7	10.8	.239	36-B
	36	14.0	11.3	10.6	9.8	.239	15.5	12.5	11.7	10.8	.239	36-B

Arm L_F or L_C	ROUND ARMS					POLYGONAL ARMS				
	L_1	D_1	D_2	② thk	Rise	L_1	D_1	③ D_2	②thk	Rise
ft.	ft.	in.	in.	in.		ft.	in.	in.	in.	
20	19.1	6.5	3.8	.179	1'-9"	19.1	7.0	3.5	.179	1'-8"
24	23.1	7.5	4.3	.179	1'-10"	23.1	7.5	3.5	.179	1'-9"
28	27.1	8.0	4.2	.179	1'-11"	27.1	8.0	3.5	.179	1'-10"
32	31.0	9.0	4.7	.179	2'-1"	31.0	9.0	3.5	.179	2'-0"
36	35.0	9.5	4.6	.179	2'-4"	35.0	10.0	3.5	.179	2'-1"
40	39.0	9.5	4.1	.239	2'-8"	39.0	9.5	3.5	.239	2'-3"
44	43.0	10.0	4.1	.239	2'-11"	43.0	10.0	3.5	.239	2'-6"

D_B = Pole Base O.D.
D_{19} = Pole Top O.D. with no Luminaire and no ILSN
D_{24} = Pole Top O.D. with ILSN w/out Luminaire
D_{30} = Pole Top O.D. with Luminaire

D_1 = Arm Base O.D.
D_2 = Arm End O.D.
L_1 = Shaft Length
L_F = Fixed Arm Length
L_C = Clamp-on Arm Length (36' Max)

② Thickness shown are minimums, thicker materials may be used.

③ D_2 may be increased by up to 1.0" for polygonal arms.

Texas Department of Transportation
Traffic Operations Division

TRAFFIC SIGNAL SUPPORT STRUCTURES

DUAL MAST ARM ASSEMBLY

(80 MPH WIND ZONE)

DMA-80 (3)-96

FILE: DMA-80.DGN	DN: MS	CK: JSY	DW: MMF	CK: JSY	
©TxDOT August 1995	DIST	FED REG	FEDERAL AID PROJECT #		SHEET
REVISIONS 5-96	AUS	6	CC 337-1-29		181
	COUNTY		CONTROL	SECT	JOB	HIGHWAY
	WILLIAMSON		0337	01	029	SH 29

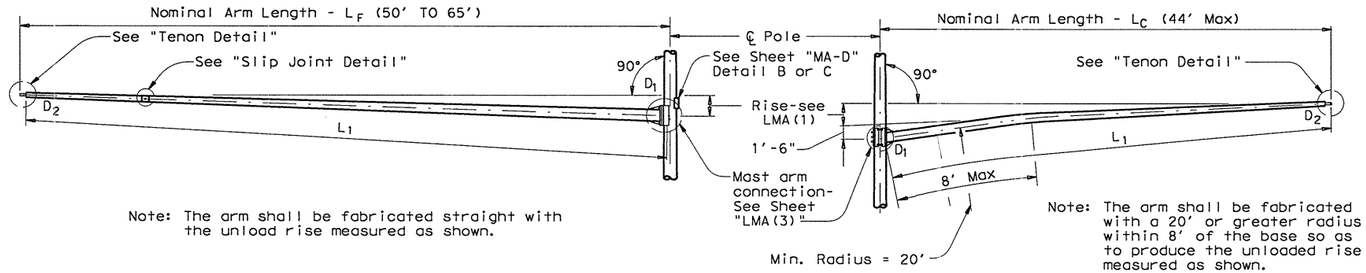

Note: The arm shall be fabricated straight with the unload rise measured as shown.

Note: The arm shall be fabricated with a 20' or greater radius within 8' of the base so as to produce the unloaded rise measured as shown.

FIXED MOUNT TRAFFIC SIGNAL ARM

CLAMP-ON TRAFFIC SIGNAL ARM

(If required, See DMA-80 or DMA-100 Standard Sheets for Clamp-on Arm Details)

Design also conforms to NCHRP Report 412 for fatigue resistance except that there are no stiffeners at the base plate. TxDOT is conducting tests to determine if stiffeners at the base plate will or will not result in optimal performance; depending upon the results of the tests, poles may need a retrofit to ensure optimal fatigue performance.

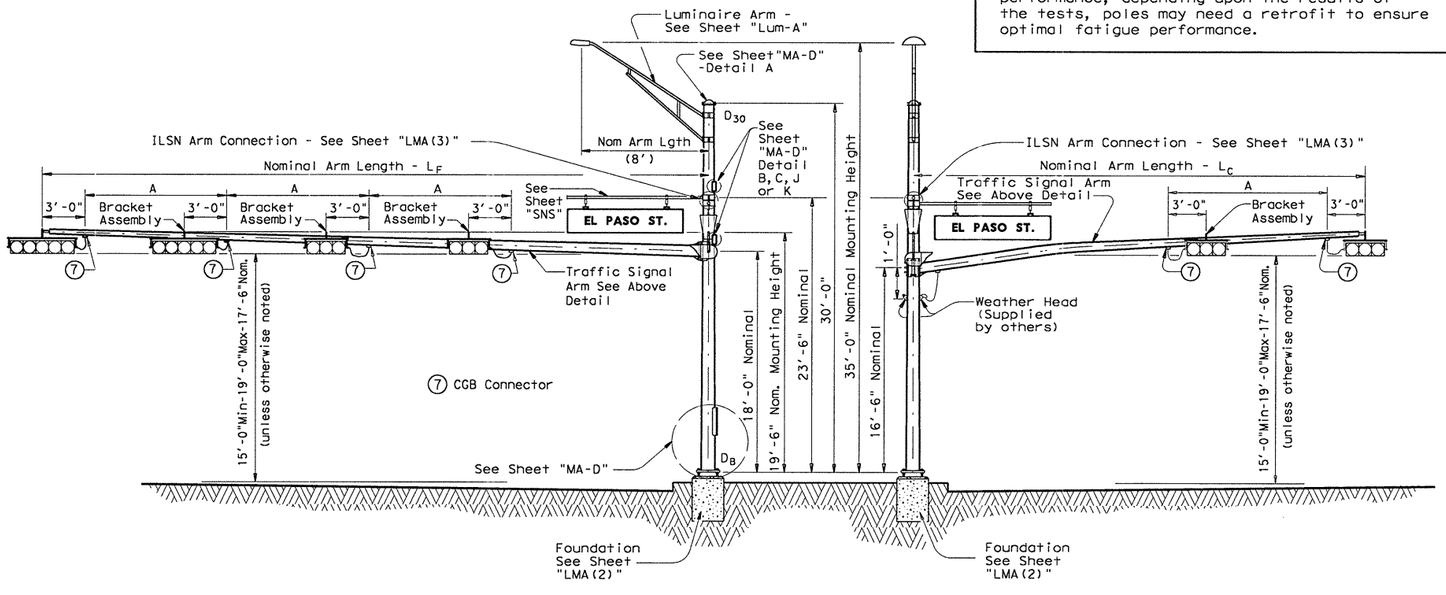

ELEVATION
(Showing fixed mount arm)

STRUCTURE ASSEMBLY

ELEVATION
(Showing clamp mount arm)

TABLE OF DIMENSIONS "A"										
Arm Length	24'	28'	32'	36'	40'	44'	50'	55'	60'	65'
Arm Type II	10'	11'	12'	13'						
Arm Type III			10'	11'	12'	12'				
Arm Type IV							12'	12'	12'	12'

VIBRATION WARNING

Mast Arms of approximately 40'-0" or longer are subject to possible harmonic vertical vibrations in light wind conditions due to unusual combinations of signal numbers, weights or positions, arm-wind orientation, and arm-pole stiffness.

Arms shall be visually inspected in 5 to 20 mph wind conditions after signal head installation and, if vertical movements with a total excursion (max positive to max negative) of more than approximately 8" are observed at arm tip, damping devices or other means shall be fitted to the arm(s).

The necessary damping device(s) or other remedial measures shall be as recommended by the fabricator. Excessive vibrations shall not be allowed to continue for more than two days.

If damping plate is used, the size shall be 16" x 66". The plate must be installed directly above traffic light located nearest the free end.

GENERAL NOTES:

Design conforms to 1994 AASHTO Standard Specifications for Structural Supports for Highway Signs, Luminaires, and Traffic Signals and Interim Specifications thereto. Design Wind Speed can be either 100 mph or 80 mph plus a 1.3 gust factor. If clamp-on traffic signal is required, designs are based on an arm included angle of 90 degrees or more. Angles of less than approximately 75 degrees will require a special design.

Poles are designed to support one 8'-0" luminaire arm, two 9'-0" internally lighted street name signs and two traffic signal arms with limited length combinations. The specified luminaire load applied at the end of luminaire arm equals 75 lbs vertical dead load plus the horizontal wind load on an effective projected area of 1.5 sq ft. The specified internally lighted street name sign applied 4'-6" from the centerline of the pole equals 85 lbs vertical dead load plus the horizontal wind load on an effective projected area of 11.5 sq ft. For 50 ft. to 65 ft. fixed-mount mast arm the specified signal load applied at the end of the traffic signal arm equals 310 lbs vertical dead load plus the horizontal wind load on an effective projected area of 52.0 sq ft. (actual area times drag coefficient). For clamp-on mast arm, the specified signal load applied at the end of the traffic signal arms equals 180 lbs vertical dead load plus the horizontal wind load on an effective projected area of 32.4 sq ft. (actual area times drag cofficient).

Except as noted in sheets 1 thru 3 of 3, also refer to Standard Sheet "MA-D" for pole details, "LUM-A for luminaire arm and connection details, "SNS" for internally lighted street name sign details, and "TS-FD" for anchor bolt and foundation details.

Fabrication shall be in accordance with the Specifications and with the details, dimensions, and weld procedures shown herein. Weld references call for preapproved weld procedures which the Fabricator must obtain prior to fabrication. Miscellaneous welds which do not call for preapproved weld procedures are nevertheless subject to rejection for poor workmanship. Material, fabrication tolerances, and shipping practices shall meet the requirements of this sheet and the Specifications.

Unless otherwise noted, all parts shall be galvanized in accordance with the Specifications.

Special designs require submission of shop drawings in accordance with the item "Steel Structures".

STANDARD PLANS
Texas Department of Transportation
Traffic Operations Division

TRAFFIC SIGNAL SUPPORT STRUCTURES

LONG MAST ARM ASSEMBLY (50 TO 65 FT) (80 AND 100 MPH WIND ZONE)

Sheet 1 of 4

LMA(1)-01

©TxDOT July 2000

DN: JSY	CK: ARC	DW: TGG	CK: JSY

REVISIONS	STATE DISTRICT	FEDERAL REGION	FEDERAL AID PROJECT	SHEET
4-20-01	14	6	CC 337-1-29	182

COUNTY	CONTROL	SECTION	JOB	HIGHWAY
WILLIAMSON	0337	01	029	SH 29

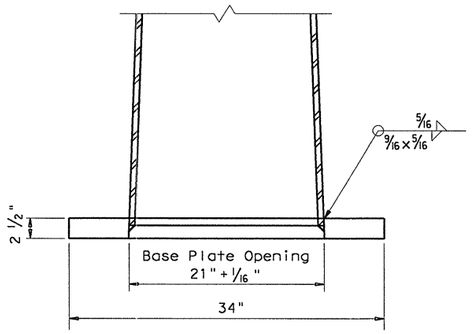

POLE CONNECTION TO BASE PLATE

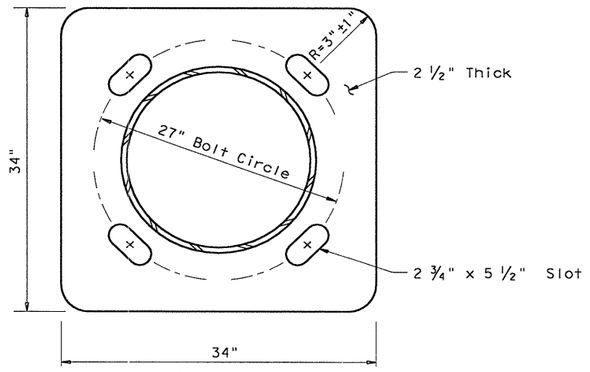

BASE PLATE

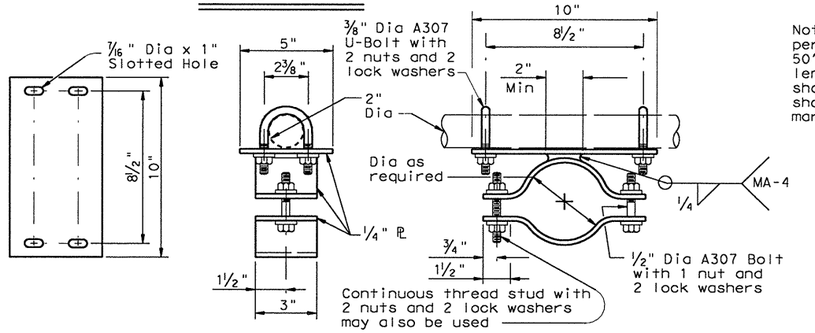

BRACKET ASSEMBLY DETAILS OPTION A

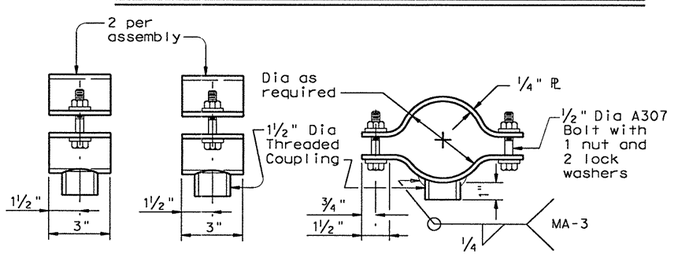

BRACKET ASSEMBLY DETAILS OPTION B

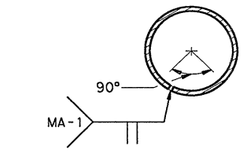

Longitudinal Seam Weld must be oriented within the lower 90° of the signal arm.

ARM WELD DETAIL

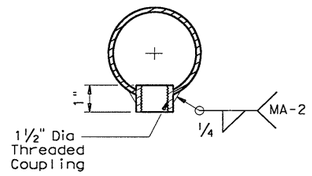

COUPLING DETAIL

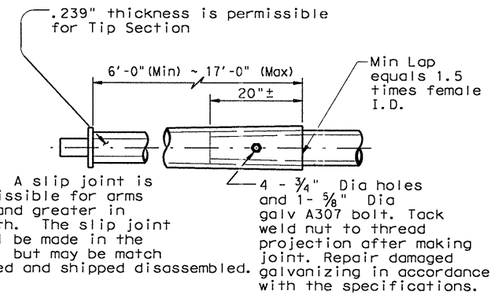

Note: A slip joint is permissible for arms 50' and greater in length. The slip joint shall be made in the shop, but may be match marked and shipped disassembled.

SLIP JOINT DETAIL

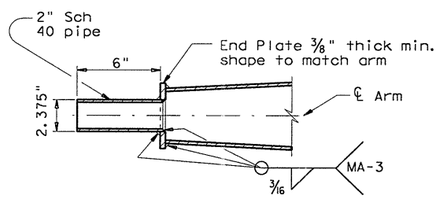

TENON DETAIL

Stainless steel bands and cast bracket as in "Astro-Brac" with 1 1/2" Dia Threaded Coupling.

BRACKET ASSEMBLY OPTION C

Arm Length	ROUND POLES					Foundation Type
	D_B	D_{19}	D_{24}	D_{30}	① thk	
ft.	in.	in.	in.	in.	in.	
50', 55' 60', 65'	21.0	18.3	17.6	16.8	.3125	48-A

Arm Length	ROUND ARMS				
	L_1	D_1	D_2	① thk	Rise (±2")
ft.	ft.	in.	in.	in.	
50	49	18.5	11.7	.3125	3'- 3"
55	54	18.5	11.0	.3125	3'- 7"
60	59	18.5	10.3	.3125	3'-11"
65	64	18.5	9.6	.3125	4'- 4"

D_B = Pole Base O.D.
D_{19} = Pole Top O.D. with no Luminaire and no ILSN
D_{24} = Pole Top O.D. with ILSN w/out Luminaire
D_{30} = Pole Top O.D. with Luminaire
D_1 = Arm Base O.D.
D_2 = Arm End O.D.
L_1 = Shaft Length
L = Nominal Arm Length

① Thickness shown is minimum, thicker materials may be used.

ANCHOR BOLT & TEMPLATE SIZE						
Bolt Dia in	Length ‡	Top Thread	Bottom Thread	Bolt Circle	R_2	R_1
2 1/2"	5'-3"	10"	3"	27"	16"	11"

‡ Min dimension given, longer bolts are acceptable.

① Anchor bolt design develops the foundation capacity given under Foundation Design Loads.

② Foundation Design Loads are the allowable moments and shears at the base of the structure.

③ Field Penetrometer readings at a depth of approximately 3 to 5 feet may be used to adjust shaft lengths.

④ If rock is encountered, the Drilled Shaft shall extend a minimum of two diameters into solid rock.

⑤ Decimal lengths in Design Table are to allow interpolation for other penetrometer values. Round to nearest foot for entry into Summary Table.

FOUNDATION DESIGN TABLE

FDN TYPE	DRILLED SHAFT DIA	REINFORCING STEEL		DRILLED SHAFT LENGTH-ft ③, ④, ⑤			ANCHOR BOLT DESIGN ①				FOUNDATION DESIGN LOAD ②		TYPICAL APPLICATION
		VERT BARS	SPIRAL & PITCH	TEXAS CONE PENETROMETER N blows/ft			ANCHOR BOLT DIA	Fy (ksi)	BOLT CIR DIA	ANCHOR TYPE	MOMENT K-ft	SHEAR Kips	
				10	15	40							
48-A	48"	20 #9	#4 at 6"	21.9	19.5	14.7	2 1/2"	55	27"	2	490	10	Mast arm assembly.

SEE SHEET "TS-FD" FOR ADDITIONAL DETAILS.

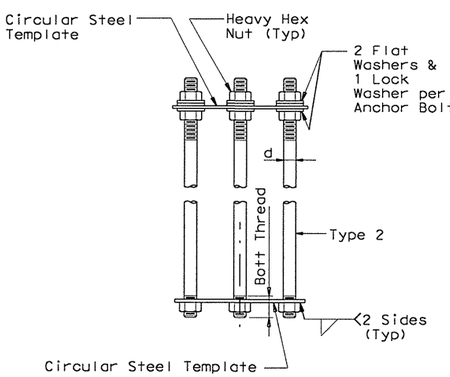

NUT ANCHOR
(TYPE 2)

ANCHOR BOLT ASSEMBLY

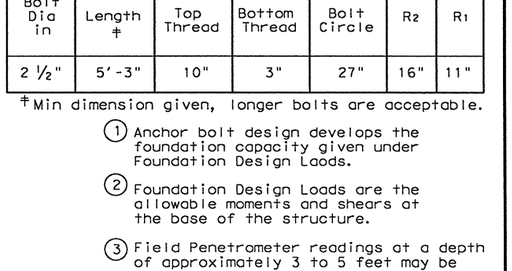

R_1 may equal R_2 if plate is welded of 3 or more segments.

TEMPLATE DETAIL

STANDARD PLANS
Texas Department of Transportation
Traffic Operations Division

TRAFFIC SIGNAL SUPPORT STRUCTURES

LONG MAST ARM ASSEMBLY (50 TO 65 FT) (80 AND 100 MPH WIND ZONE)

Sheet 2 of 4 LMA(2)-01

© TxDOT July 2000	DN: - JSY	CK: - ARC	DW: - TGG	CK: - JSY

REVISIONS	STATE DISTRICT	FEDERAL REGION	FEDERAL AID PROJECT	SHEET
4-20-01	14	6	CC 337-1-29	183

COUNTY	CONTROL	SECTION	JOB	HIGHWAY
WILLIAMSON	0337	01	029	SH 29

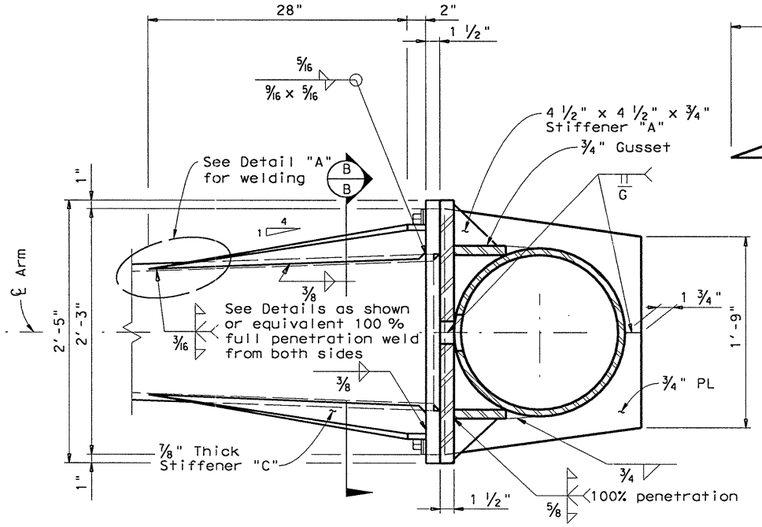

SECTION A-A

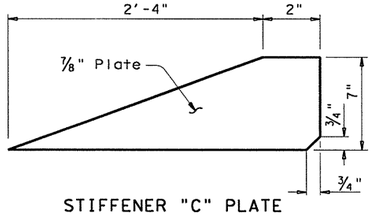

STIFFENER "C" PLATE

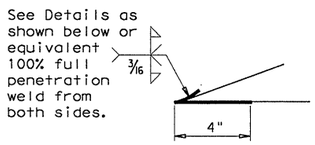

Only 4" length at tip of Stiffener "C" requires full penetration weld. Smooth weld radius to connect Stiffener . Others only require fillet weld.

DETAIL "A"

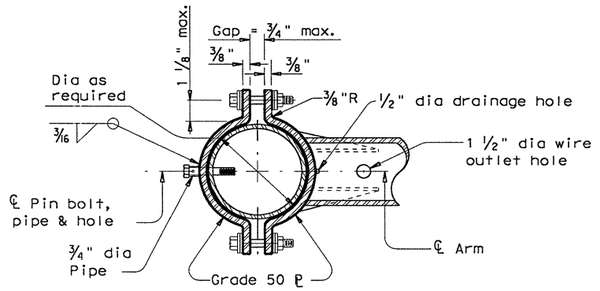

SECTION C-C

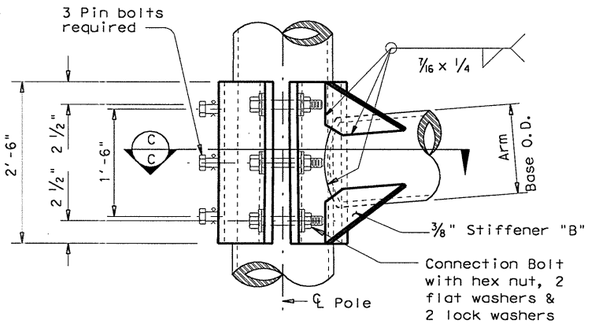

ELEVATION

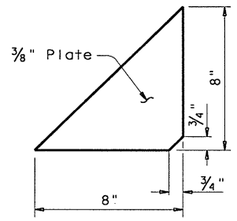

STIFFENER "B" PLATE

MATERIALS	
Round Shafts or Polygonal Shafts	ASTM A595 GR A, ASTM A570 GR 50, ASTM A607 GR 50, ASTM A572 GR 50 or A36M50
Plates (1)	ASTM A36 OR A572 GR 50 or A595(2) or A36M50
Connection Bolts	ASTM A325 except where noted
Pin Bolts	ASTM A325
Pipe	ASTM A53 GR A or B, or A501
Misc. Hardware	Galvanized steel or stainless steel or as noted

(1) Any of the materials listed for plates may be used where the drawings do not specify a particular Grade designation.

(2) If A595 material is used, it need not be cold worked to A595 requirments, but material must have 40 ksi minimum yield prior to fabrication.

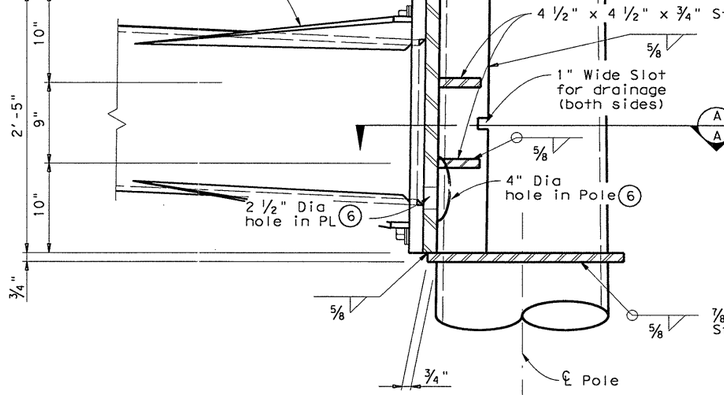

(6) Deburr holes and offset as shown for drainage

ELEVATION

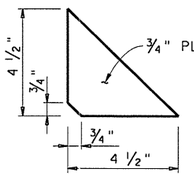

STIFFENER "A" PLATE

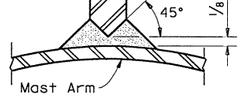

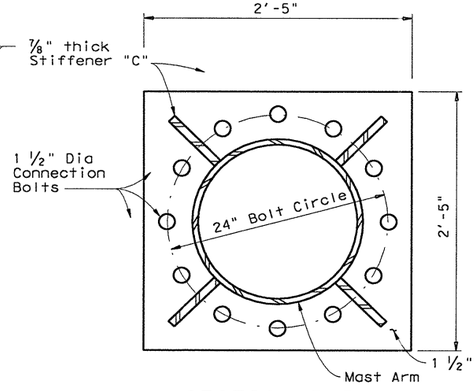

SECTION B-B

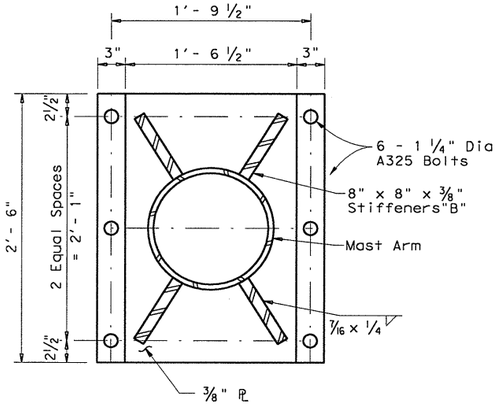

MAST ARM AND ILSN ARM TO POLE

CLAMP-ON DETAIL

GENERAL NOTES:

Clamp-on details are used for the second arm on dual mast arm assemblies. A Maximum 1 ½" wide vertical slotted hole may be cut in the front clamp plate to facilitate drainage during galvanizing. THe slot shall be centered behind the arm and shall be no longer than the arm diameter minus 1".

Fixed mount details are used for single mast arm assemblies and for the first arm on dual mast assemblies.

Where duplicate parts occur on a detail, welds shown for one part shall apply to all similar parts on the detail.

Pin bolts are required to prevent rotation of clamp-on arms under design wind forces.

STANDARD PLANS

Texas Department of Transportation

Traffic Operations Division

TRAFFIC SIGNAL SUPPORT STRUCTURES

LONG MAST ARM ASSEMBLY (50 TO 65 FT) (80 AND 100 MPH WIND ZONE)

LMA(3)-01

Sheet 3 of 4

©TxDOT July 2000

DN: - JSY	CK: - ARC	DW: - TGG	CK: - JSY

REVISIONS	STATE DISTRICT	FEDERAL REGION	FEDERAL AID PROJECT	SHEET
4-20-01	14	6	CC 337-1-29	184

COUNTY	CONTROL	SECTION	JOB	HIGHWAY
WILLIAMSON	0337	01	029	SH 29

...\signals\lma.dgn 09/21/2004 09:43:55 AM

Shipping Parts List

Ship each pole with the following attached: enlarged hand hole, pole cap, fixed arm connection bolts and washers, and any additional hardware listed in the table.

Nominal Arm Length	30' Poles with Luminaire See note above plus: one (or two if ILSN attached) small hand hole, clamp-on simplex		24' Poles with ILSN See note above plus one small hand hole		19' Poles with no Luminaire and no ILSN See note above	
Single Mast Arm						
Lf ft.	Designation	Quantity	Designation	Quantity	Designation	Quantity
50	50L		50S		50	
55	55L		55S		55	
60	60L	4	60S		60	
65	65L		65S		65	

Dual Mast Arm

Lf ft.	Lc ft.	Designation	Quantity	Designation	Quantity	Designation	Quantity
50	20	5020L		5020S		5020	
	24	5024L		5024S		5024	
	28	5028L		5028S		5028	
	32	5032L		5032S		5032	
	36	5036L		5036S		5036	
	40	5040L		5040S		5040	
	44	5044L		5044S		5044	
55	20	5520L		5520S		5520	
	24	5524L		5524S		5524	
	28	5528L		5528S		5528	
	32	5532L		5532S		5532	
	36	5536L		5536S		5536	
	40	5540L		5540S		5540	
	44	5544L		5544S		5544	
60	20	6020L		6020S		6020	
	24	6024L		6024S		6024	
	28	6028L		6028S		6028	
	32	6032L		6032S		6032	
	36	6036L		6036S		6036	
	40	6040L		6040S		6040	
	44	6044L		6044S		6044	
65	20	6520L		6520S		6520	
	24	6524L		6524S		6524	
	28	6528L		6528S		6528	
	32	6532L		6532S		6532	
	36	6536L		6536S		6536	
	40	6540L		6540S		6540	
	44	6544L		6544S		6544	

Foundation Summary Table **

Location Ident.	Avg. N Blow/ft.	No. Each	Drill Shaft *** Length (feet)
			48-A
SH 29 & CR 265W			
POLES A, B, C & D	10	4	22/EA
Total Drill Shaft Length			88

Notes

* Supply Option "A" unless otherwise noted

** Foundations may be listed separately or grouped according to similarity of location and type. Quantities are for the Contractor's information only.

*** Decimal lengths in Design Table are to allow interpolation for other penetrometer values. Round to nearest foot for entry into Summary Table.

Shipping Parts List

Traffic Signal Arms (Fixed Mount) (1 per pole)
Ship each arm with listed equipment attached

Nominal Arm Length	Type IV Arm (4 Signals) * 3 Bracket Assembly * and 4 CGB Connectors	
ft.	Designation	Quantity
50	50IV	
55	55IV	
60	60IV	
65	65IV	

Luminaire Arms (1 per 30' pole)

Nominal Arm Length	Quantity
8' Arm	

ILSN Arm (Max. 2 per pole) Ship with clamps, bolts and washers

Nominal Arm Length	Quantity
7' Arm	
9' Arm	

Traffic Signal Arms (80 MPH Clamp-On Mount) (1 per pole) Ship each arm with listed equipment attached

Nominal Arm Length	Type I Arm (1 Signal) 2 CGB connector and 1 clamp w/bolts and washers		Type II Arm (2 Signals) * 1 Bracket Assembly * and 3 CGB connectors, and 1 clamp w/bolts and washers		Type III Arm (3 Signals) * 2 Bracket Assembly * and 4 CGB connectors, and 1 clamp w/bolts and washers	
ft.	Designation	Quantity	Designation	Quantity	Designation	Quantity
20	20I-80					
24	24I-80		24II-80			
28	28I-80		28II-80			
32			32II-80		32III-80	
36			36II-80		36III-80	
40					40III-80	
44					44III-80	

Traffic Signal Arms (100 MPH Clamp-On Mount) (1 per pole) Ship each arm with listed equipment attached

Nominal Arm Length	Type I Arm (1 Signal) 2 CGB connector and 1 clamp w/bolts and washers		Type II Arm (2 Signals) * 1 Bracket Assembly * and 3 CGB connectors, and 1 clamp w/bolts and washers		Type III Arm (3 Signals) * 2 Bracket Assembly * and 4 CGB connectors, and 1 clamp w/bolts and washers	
ft.	Designation	Quantity	Designation	Quantity	Designation	Quantity
20	20I-100					
24	24I-100		24II-100			
28	28I-100		28II-100			
32			32II-100		32III-100	
36			36II-100		36III-100	
40					40III-100	
44					44III-100	

Anchor Bolt Assemblies (1 per pole)

Anchor Bolt Diameter	Anchor Bolt Length	Quantity
2 1/2 "	5' - 3"	

Each anchor bolt assembly consists of the following: Top and bottom templates, 4 anchor bolts, 8 nuts, 8 flat washers, 4 lock washers and 4 nut anchor devices (type 2) per Standard Drawing "TS-FD".
Templates may be removed for shipment.

Abbreviations
Lf= Fixed Arm Length
Lc= Clamp-on Arm Length (44' Max.)

STATE OF TEXAS
BONNIE C. MOSS
93004
REGISTERED
PROFESSIONAL ENGINEER
September 21, 2004

STANDARD PLANS
Texas Department of Transportation
Traffic Operations Division

LONG MAST ARM ASSEMBLY PARTS LIST

Sheet 4 of 4 LMA(4)-01

© TxDOT November 2000

DN: - JK	CK: - GRB	DW: - FDN	CK: - CAL

REVISIONS	STATE DISTRICT	FEDERAL REGION	FEDERAL AID PROJECT	SHEET
4-20-01	14	6		185

COUNTY	CONTROL	SECTION	JOB	HIGHWAY
WILLIAMSON	0337	01	029	SH 29

I. GENERAL REQUIREMENTS FOR ALL ELECTRICAL WORK

The location of all conductors, conduits, junction boxes, ground boxes, and electrical services is diagrammatic only and may be shifted by the Engineer to accommodate local conditions.

Materials shall be new and unused. Materials and installation shall comply with the applicable provisions of the National Electrical Code (NEC), National Electrical Manufacturers Association (NEMA) standards, and shall be Underwriters Laboratories (UL) Listed unless otherwise shown on the plans or specifications or approved by the Engineer in writing. Faulty fabrication or poor workmanship in any material, equipment, or installation shall be justification for rejection. When reference is made to UL, it can be considered to mean a Nationally Recognized Independent Testing Lab (NRTL). Comparable standards of Canadian Standard Association, Electrical Testing Laboratories or Factory Mutual can be equal to the referenced UL standard. Where reference is made to NEMA listed devices, IEC listed devices shall not be considered to be an acceptable equal to a NEMA listed device. Acceptable devices may have both a NEMA and IEC listing.

With the exception of high strength bolts, miscellaneous nuts, bolts and hardware may be stainless steel when plans specify galvanized, provided that bolts are 1/2 inch or less in diameter. The Contractor shall provide the following electrical test instruments as required by the Engineer to confirm compliance with the contract and the NEC. Those test instruments are voltmeter, amp probe, megger (1000 volt DC) and torque wrenches. All meters shall have been properly calibrated within one year. Calibration certification shall be provided to the Engineer upon request. Calibration certification tag shall also be applied to the meter. The Contractor shall operate meters during inspection as requested by the Engineer. Grounding shall be as shown on the plans and in accordance with the NEC. Metallic conduit, light poles, luminaires on bridge structures, and all metal enclosures shall be bonded to the system-grounding conductor. The ground rod in each ground box or junction box at the bridge ends, and in each ground box installed for underpass lighting will also be bonded to the system grounding conductor. The grounding conductor shall be bare or, if insulated, shall be green. Ground rods, connectors, and bonding jumpers will not be paid for separately, but will be subsidiary to the various bid items.

SUBMITTALS:

The contractor shall submit for approval six (6) copies of catalog cut sheets for each of the following three (3) categories.
Category 1. Electrical services including photocell.
Catagory 2. Breakaway disconnects, heat shrink tubing, heat shrink filler tape, GelCaps and ground boxes which will include loading capacity certification.
Category 3. Highmast assembly kits, when applicable. See Item 614 "Highmast Illumination Assemblies". Submittals shall be legible and shall be marked to indicate which product on a cut sheet is to be supplied. Where manufacturers provide warranties and guarantees as a customary trade practice, the Contractor shall furnish to the State such warranties and guarantees.
Any deviation from plans or specifications, including deviations due to plan error should be prominently displayed on the submittal. Any changes not prominently noted in submittal and incorporated into the work without proper authorization will constitute grounds for rejection of that portion of the work.

II. CONDUIT

A. MATERIALS

1. Conduit and fittings shall be UL Listed for the intended use shown on plan sheets.
2. Conduit shall be the type shown by descriptive code or shown elsewhere on the plans. Substitution of the various types of conduits will not be permitted. All flexible conduit in rigid metallic conduit (RMC) systems shall be Liquidtight Flexible Metal (LFMC) conduit. All flexible conduit in PVC systems shall be Liquidtight Flexible Non-metallic conduit (LFNC).
3. All exposed conduits shall be RMC, unless otherwise specifically shown on the plans. All metal conduit shall be properly grounded.
4. Couplings, connectors, conduit bodies, grounding bushings, and offset nipples for RMC shall be electro-zinc plated steel or hot dipped galvanized malleable iron, threaded or threadless compression type, rain-tight and shall be UL listed for the intended use.
5. Expansion joints for metal conduit shall be provided with an internal or external bonding jumper and shall be UL listed.
6. Unless otherwise shown on the plans, junction box minimum sizes shall be in accordance with the following table which applies to the greatest number of conductors entering the box through one conduit with no more than four conduits per box. When a mixture of conductor sizes are present, the conductors shall be counted as if all are of the larger size. Situations not applicable to the table shall be sized in accordance with NEC 370-28.

AWG	3 CONDUCTORS	5 CONDUCTORS	7 CONDUCTORS
#1	10" x 10" x 4"	12" x 12" x 4"	16" x 16" x 4"
#2	8" x 8" x 4"	10" x 10" x 4"	12" x 12" x 4"
#4	8" x 8" x 4"	10" x 10" x 4"	10" x 10" x 4"
#6	8" x 8" x 4"	8" x 8" x 4"	10" x 10" x 4"
#8	8" x 8" x 4"	8" x 8" x 4"	8" x 8" x 4"

7. RMC system junction boxes equal to or smaller, in any dimension, than 12 x 12 x 6 (HxWxD), surface mounted and containing conductors #8 or larger, shall be hot dipped galvanized cast iron with minimum wall thickness of 3/16 inch, shall have external mounting lugs, and shall be UL listed Crouse-Hinds Type WAB, OZ/Gedney Type YS or approved equal. Unless otherwise shown elsewhere on the plans, RMC system junction boxes larger than the aforementioned boxes but equal to or smaller, in any dimension, than 18 x 18 x 6 (HxWxD) shall be 14-ga. stainless steel; RMC system junction boxes larger than 18 x 18 x 6 (HxWxD) shall be 12-ga. stainless steel. All metal junction boxes shall be equipped with a threaded hole or lug for grounding. Stainless steel boxes 12 x 12 x 6 and larger need not be UL Listed but shall meet the other requirements of the NEC and shall have ribs, stiffeners, or thicker metal and shall have external mounting feet. Junction boxes with an internal volume of more than 100 cu. in. may be supported by connection of two or more rigid metal conduits, where specifically shown on the plans or where approved by the Engineer.
8. Junction boxes containing only #10 or #12 AWG conductors shall be Crouse Hinds Type GRFX, Appleton Type JBOX, two-gang FD, or similar approved cast iron box. Boxes shall be sized according to NEC Table 370-16(a).
9. IMC and EMT conduit shall not be used unless specifically required by the plan layout sheets. Junction boxes in EMT conduit systems shall be made from galvanized sheeting and shall be UL listed and approved for outdoor use, unless otherwise noted on the plans. Sheet metal junction boxes shall be sized in accordance with the NEC. Junction boxes for IMC conduit systems shall meet the requirements of boxes used with RMC systems.
10. Junction boxes in PVC conduit systems shall be PVC, intended for outdoor use, unless otherwise noted on the plans.
11. Elbows in PVC conduit systems one inch and larger shall be rigid metal, with the exception of traffic signal systems which may have PVC elbows instead of rigid. If any part of the rigid metal elbow is buried less than 18 inches underground the elbow and rigid metal extension shall be grounded. Grounding shall be accomplished by means of a grounding bushing installed on the extension. Unless specifically shown on the plans, rigid metal elbows containing, or entering ground boxes containing only communications conductors, loop detectors, or other low voltage power limited circuits need not be grounded unless a ground wire is present in the conduit or ground box. The rigid metal elbows located in concrete foundations may be extended with PVC conduit and need not be grounded provided that the end of the elbow nearest the end of the conduit run exiting the foundation is at least 2 inches below the concrete. RMC elbows will not be eliminated. RMC elbows will not be paid for directly, but will be subsidiary to various bid items.
12. High-Density Polyethylene (HDPE) conduit shall meet the requirements of Item 622, Duct Cable, except that the HDPE conduit, when bid under Item 618, Conduit, shall not contain factory installed conductors. Fittings for HDPE conduit shall be UL listed as an electrical conduit connector or shall be thermally fused using an electrically heated wound wire resistance welding method. HDPE conduit may be substituted for bored schedule 40 or schedule 80 PVC conduit. When such substitution is made, bored HDPE shall be schedule 40 of the size PVC being replaced. The HDPE conduit shall transition to PVC (or RMC elbow when required) at the bore pit. Size and schedule shall be as shown on the plans. Substituted conduit may not be extended to ground boxes or foundations; RMC elbows shall be installed at ground boxes and foundations. RMC elbows will not be eliminated.
13. All conduit support hardware including straps, nuts, bolts, screws, retaining anchors and washers shall be hot dipped galvanized or stainless steel. Strut type conduit straps shall be stainless steel or hot dipped galvanized. Strut type straps need not be made of malleable type material. Stamped-cadmium plated straps will not be allowed. Straps having only one mounting hole shall not be allowed for use on conduits 2 inches and larger with the exception of electrical service poles where stainless steel standoff straps will be allowed. Two piece conduit straps designed to be used with a mounting shoe shall be installed only with the correctly sized shoe.

B. CONSTRUCTION METHODS

1. Conduit in structures shall have expansion fittings at structure expansion joints. All straight runs of RMC conduit exposed on structures such as bridges shall have expansion joints installed at maximum intervals of 150 feet. Expansion joints shall be installed so they allow for movement of the conduit. Installation of the joint in such a manner that will not allow for movement shall be repaired at no expense to the state. The method of determining the final setting length of the expansion joint shall be provided to the Engineer upon request.
2. Conduit supports shall be spaced at maximum intervals of 5 feet. Conduit spacers shall be used with metal conduit placed on surfaces of concrete structures (See conduit mounting options).
3. Conduit supports shall not be attached directly to prestressed concrete beams except as shown specifically in the plans and approved by the Engineer.
4. Unless otherwise shown on the plans, conduit placed beneath existing roadways, driveways, or sidewalks, or after the base or surfacing operation has begun, shall be accomplished by jacking or boring. The Contractor shall back fill and compact the bore pits to the bottom of the conduit prior to installing connecting conduit or duct cable to prevent bending of the connection.
5. Conduit trenched in the subgrade of new roadways shall be backfilled with excavated material, unless otherwise noted on the plans. Conduit trenched in the sub-base of new roadways shall be backfilled with cement-stabilized base.
6. Open ends of all conduit and raceways shall be fitted with temporary caps or plugs to prevent entry of dirt, debris and rodents during construction. The temporary cap may be constructed of duct tape, but in all cases shall be tightly fixed to the conduit and shall be durable. The contractor shall clean out the conduit and prove it clear in accordance with Standard Specifications Item 618.3 prior to installing any conductors.
7. Conduit entry into the top of enclosures such as safety switches, meter cans, service enclosures, auxiliary enclosures and junction boxes shall be made weatherproof using conduit sealing hubs, or threaded bosses.
8. A bonding jumper shall be installed from each grounding bushing to the nearest grounding rod, grounding lug, and/or equipment grounding conductor. All jumpers shall be the same size as equipment grounding conductor. Conduit used as casing under roadways for duct cable need not be grounded if duct extends full length through the casing. At electrical services, grounding electrode conductor shall be a solid Copper #6 AWG.
9. Metal junction boxes shall be bonded to the grounding conductor in accordance with the NEC.
10. Conduits entering ground boxes shall be placed so that the conduit ends shall be not less than 3 inches nor more than 6 inches from bottom of box (See ground box detail on sheet ED(3).
11. Conduit ends shall be sealed with heat shrink boots with waterproof sealant, urethane foam, or by other methods approved by the Engineer. Sealing shall be done after completion of any required pull tests. Duct tape shall not be used as a permanent conduit sealant. Silicone caulking shall not be used as a sealant.
12. All strut mounting material and hardware shall be hot-dip galvanized or shall be stainless steel. The cut ends of strut and non-galvanized rigid metal conduit threads shall be coated with a zinc rich paint (90% or more zinc content). Zinc rich paint may only be used to touch up galvanized material as allowed under item 445.6 galvanizing. The painting of non-galvanized material with a zinc rich paint shall not be considered as an approved alternative for galvanized materials.
13. All PVC conduit terminations shall be fitted with bushings or bell ends. All metal conduit terminations shall be fitted with a grounding type bushing.

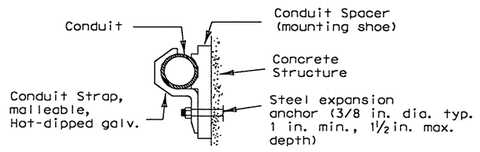

CONDUIT MOUNTING OPTIONS

(Attachment to concrete surfaces)
(See para. II.B.2)

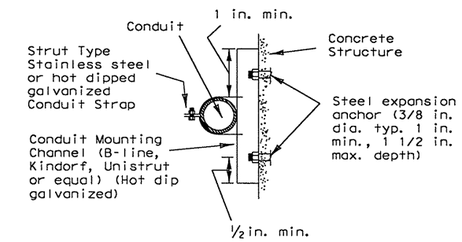

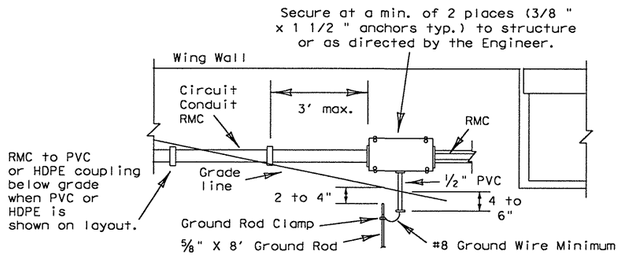

TYPICAL CONDUIT ENTRY TO BRIDGE STRUCTURE DETAIL

NOTES

1.) Ground rod clamp to be UL listed for direct burial.
2.) For conduit placed in structure, use flush-mounted box.
3.) Bond junction box and metal conduits to equipment grounding conductor and grounding electrode conductor using listed connector.
4.) Seal all conduits entering the junction box from underground.
5.) Install bell end or bushing on 1/2 " PVC conduit both ends.
6.) Ground rod to be driven within 8 inches of 1/2 inch PVC conduit end.

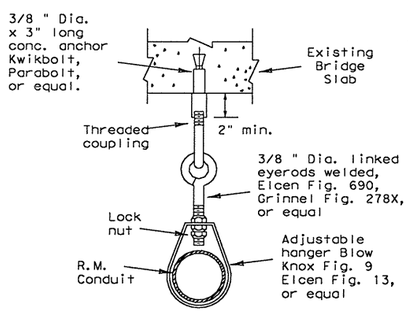

CONDUIT HANGER DETAIL

(Attachment to horizontal surfaces)
Hangers need not be UL listed for electrical use
ie: plumber pipe hangers are acceptable

5/03 Revision

1 Revised notes.

STANDARD PLANS
TEXAS DEPARTMENT OF TRANSPORTATION
Traffic Operations Division

ELECTRICAL DETAILS-CONDUIT

ED(1)-03

© TxDOT January 1992	DN: KB	CK: JW	DW: DN	CK: GC	MEG NO.:

REVISIONS	STATE DISTRICT	FEDERAL REGION	FEDERAL AID PROJECT	SHEET
4-98 12-00 3-03 5-03	AUS	6	CC 337-1-29	186

COUNTY	CONTROL	SECTION	JOB	HIGHWAY
WILLIAMSON	0337	01	029	SH 29

I. ELECTRICAL CONDUCTORS

A. MATERIALS

1. Insulated conductors shall be NEC Type XHHW. Insulated conductors shall be color coded in accordance with the NEC, articles 200, 250, and 310; i.e. Insulation of grounded conductors (neutrals) shall be white. Grounding conductors (ground wires) shall be bare or insulation shall be green. Insulation of ungrounded conductors (hots) shall be any color except green, white, or gray. Identification of conductors #6 American Wire Guage (AWG) and smaller shall be by continuous jacket color. Color coding of electrical conductors #4 AWG and larger shall be either by continuous color jacket or by colored tape. Colored tape marker shall consist of a half-lap of tape covering a 6-inch length of conductor.
2. Where two or more circuits are present in one conduit or enclosure, the conductors of each circuit shall be identified by a permanent non-metallic tag at each accessible location. The tag shall be fastened to the conductors by two plastic straps. Each tag shall indicate circuit number, letter, or other identification shown in the plans.
3. Grounding electrode conductor #6 AWG for bonding to ground rod at electrical service, shall be solid. Connection of conductor to ground rod shall be made using UL Listed connectors designed for such purposes.
4. Heat Shrink Tape filler shall be used to seal the ends of heat shrink tubing around two or more conductors that are insulated with heat shrink tubing. Tape material shall have a minimum dielectric strength of 225 volts per mil and shall be cross-linked butyl rubber. Tape shall be supplied in rolls and shall have a backing (release paper) to prevent the tape from sticking to itself.
5. Heat shrink tubing shall be heavy wall, UL listed for 600 volts or greater and shall have factory applied internal sealant.
6. GelCaps shall be UL listed for 600-volt applications. GelCap shall have see-through elastomer molded cover. Cover shall be filled with high dielectric insulating gel silicone sealant to provide waterseal. Cover shall be held in place by snap-lock, molded clamp made of UV stable polypropylene.
7. Splicing materials, insulating materials, breakaway disconnects, GelCaps and fuse holders will not be paid for directly but shall be subsidiary to various bid items.

B. CONSTRUCTION METHODS

1. After conductors have been installed in conduit, a pull test shall be made on conductors. When any length of conductor cannot be freely pulled, the Contractor shall make any needed alterations or repairs at no expense to the State.
2. The Contractor shall perform insulation resistance tests in accordance with Item 620, "Electrical Conductors." The Contractor shall coordinate with the Engineer to witness the tests.
3. A sufficient length of conductor for making up connections shall be left in ground boxes (2 feet minimum, 3 feet maximum, to point of splice, 3 feet minimum, 4 feet maximum, when conductor is pulled through with no splice), enclosures, weatherheads and pole bases (1 foot minimum, 1.5 feet maximum).
4. Splices shall be made only in junction boxes, ground boxes, pole bases, or electrical enclosures and shall be made with listed compression or screw type pressure connectors, terminal blocks, bolted lugs, or split bolt connectors. Splices shall be insulated with heavy wall heat shrink tubing or GelCaps and shall be made so as to provide a watertight splice. Heat shrink sleeve shall overlap conductor insulation a minimum of 2 inches on both sides of the splice. Where heat shrink tubing may not shrink sufficiently to provide a watertight seal around the individual conductors, prior to heating the tubing, the Contractor shall increase the diameter of the conductors insulation using heat shrink filler tape to provide a watertight seal between the individual conductors and the heat shrink tubing. Tape shall be visible after completion of all splices. Where filler tape is used but not visible, the Engineer shall approve each individual splice by conducting a physical inspection of each splice. When it appears the tubing has been burned, or overheated the tubing shall be considered to be defective and shall be replaced.
5. GelCaps when used in place of heat shrink method of splicing, shall be sized and installed according to manufacturer's specifications. (Raychem GelCap and GelCap SL or equal.)
6. Wire nuts may be used for #8 AWG or smaller conductors in above-ground junction boxes, but not in pole bases or ground boxes. Wire nuts shall be positioned upright to prevent the accumulation of water. Wire nuts used at these locations shall have factory applied waterproof sealant.
7. Conductors in illumination poles shall be supported by a J-hook in the top of the pole.
8. All conductors bid under Item 620 "Electrical Conductors" shall have breakaway electrical disconnects installed anytime conductors pass through a break-away support device.
9. For terminating the conductors, insulation-jacketing material shall be removed in such a manner as to not nick any of the individual strands of the conductor. When individual conductor strands are removed, the conductor shall be considered to be damaged.
10. When a conductor or cable has been damaged, or fails to pass an insulation resistance test, the conductor shall be replaced.
11. Duct tape, black electrical tape, or wire nuts shall not be used in the repair of a damaged conductor.
12. For terminations, no more than one wire may be installed under a single pressure connector, unless the device is listed for more than one wire.
13. Conductors connected to break-away in line fuse holders must be installed in accordance with the specific manufacturer's installation instructions. Where threaded connections are made, they shall be properly torqued. Where crimp type connections are made, crimps shall be made using properly sized crimping pliers. Proper conductor terminations are critical to the safe operation of break-away devices.
14. Waterproofing boots shall be properly trimmed to fit snugly around the conductor so as to provide a water proof connection. No more than one wire may enter a single opening in any one boot. Water proofing boots must provide the correct number of openings. Where only one wire is to be connected to a boot, the boot may not be a two wire type.

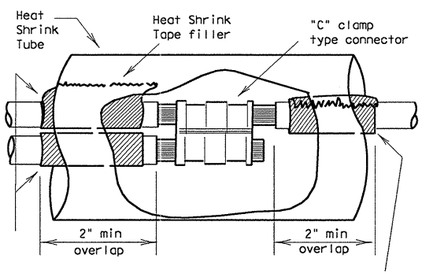

SPLICE OPTION 1

C-CLAMP

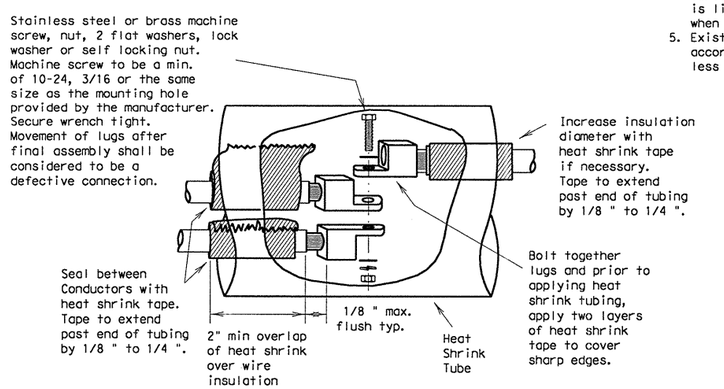

SPLICE OPTION 2

BOLTED WIRE LUGS

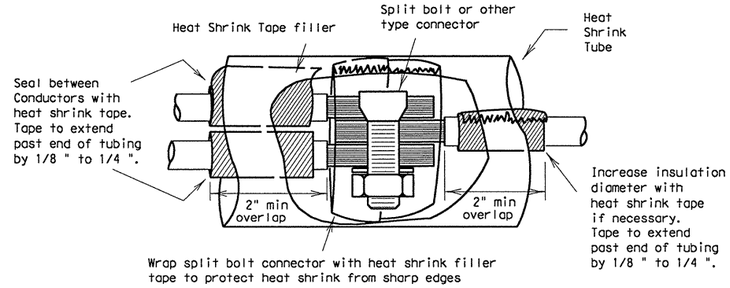

SPLICE OPTION 3

SPLIT BOLT

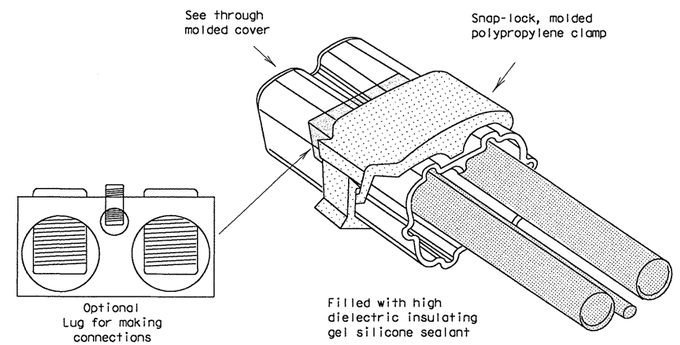

SPLICE OPTION 4

GELCAP

GelCap shall be sized and installed according to manufacturers specifications

15. All conduits that contain circuit wiring of 50 volts or more shall contain an equipment grounding conductor (EGC). Conduit for traffic signals shall have an EGC, with a minimum size of #8 AWG stranded. Unless otherwise shown on the plans, the EGC for all other conduits shall be the same AWG size as the largest current carrying conductor contained in that conduit. The EGC shall be paid for item 620-Electrical Conductors.

C. TEMPORARY WIRING

1. Temporary conductors and electrical equipment to provide power for utilization equipment, shall be installed in accordance with the NEC article 305. All temporary wiring materials and methods shall comply with the standard sheets. All power outlets for portable electrical equipment, power tools, ice machines, ice storage bins and refrigerators located outdoors at grade, supplied from a utility power source, shall be provided with a ground fault circuit interrupter.
2. Residual current protective devices (GFCI) may be any one of the following: molded cord and plug set, receptacle, or circuit breaker type.
3. Where wire nuts are approved for temporary wiring, they shall be of the self-sealing type.
4. All conductor splices must be contained within a listed enclosure, ground box or the splices will be more than ten feet above grade vertically and more than five feet horizontally from any metal structure. Where temporary conductors are installed in any area that is likely to be subjected to vehicle traffic, or mobile construction equipment, the vertical clearance to ground shall be at least 18 feet when measured at the lowest point. Where power conductors are to be supported by a span wire, the span wire shall be properly grounded.
5. Existing conduit containing service conductors uncovered during the construction process shall be repaired in a timely manner in accordance with the NEC. Existing non-metallic conduit exposed during construction shall not be left exposed above grade, or with less than eighteen inches of cover, without protective methods approved by the Engineer.

STANDARD PLANS
TEXAS DEPARTMENT OF TRANSPORTATION
Traffic Operations Division

ELECTRICAL DETAILS-CONDUCTORS

ED(2)-03

© TxDOT January 1992	DN: - KB	CK: - JW	DW: - DN	CK: - GC	MEG NO.:

REVISIONS	STATE DISTRICT	FEDERAL REGION	FEDERAL AID PROJECT				SHEET
10-93	AUS	6	CC 337-1-29				187
4-98	COUNTY		CONTROL	SECTION	JOB		HIGHWAY
12-00	WILLIAMSON		0337	01	029		SH 29
3-03							

II. GROUND RODS

A. MATERIALS

1. All ground rods installed at electrical services, including supplemental lightning protection ground rods specified by the plans in other locations such as pole bases, shall be copper clad and UL listed. Rods shall be a minimum diameter of 5/8 inch. The length shall be a minimum of 8 feet. Larger diameter or longer length rods may be called for in some specific locations, see the individual plans sheets.
2. Ground rod clamps shall be listed to be in direct contact with the soil. Where concrete encasement is required, the clamp shall be listed for concrete encasement.

B. CONSTRUCTION METHODS

1. Ground rods installed in locations such as pole bases, to provide supplemental lightning protection need not be totally in contact with the soil. Where called for in the plans, rods may be encased in soil or concrete or any combination of soil and concrete. When concrete encased, the connection of the conductor to the rod shall be readily accessible for inspection or repairs. When driven into the soil the upper end shall be between 2 to 4 inches below finished grade. Ground rods shall not be placed in the same drilled hole as a timber pole.
2. Ground rods shall be installed such that the end imprinted with the rod's part number is installed as being the upper end.
3. Non-conductive coatings such as concrete splatter shall be removed from the rod at the clamp location.
4. Routing of lightning protection ground rod wires shall be run as short and straight as possible. Where bends are required they shall have a minimum radius of four inches.
5. Unless specifically called for by the plans, conduits used for ground rod wires shall be non-metallic. Where metal conduits are specified, a grounding bushing and properly sized bonding jumper shall be provided and properly installed on each end.
6. Where rocky soil or a solid rock bottom is encountered when driving a ground rod and the horizontal trench placement method is the only viable solution, written authorization from the Engineer must be obtained.

III. GROUND BOX

A. MATERIALS

1. Ground boxes 16x30x24 inches (WxLxD) or smaller shall be polymer concrete of the type required by the descriptive code shown elsewhere. Larger ground boxes shall be as shown elsewhere in the plans.
2. All ground boxes and covers shall be permanently marked either by impress or by permanent ink, with manufacturer's model number and manufacturer's name or logo.
3. Covers shall be bolted down, and bolt holes in the box shall be arranged to drain dirt.
4. Ground box Types A, B, C, D & E shall meet the following requirements:
   a. Ground boxes and covers be manufactured from polymer concrete reinforced with continuous strands of woven or stitched borosilicate fiberglass cloth. The polymer concrete shall be made from catalyzed polyester resin, sand and aggregate, and shall have a minimum compressive strength of 11,000 psi. Polymer concrete containing chopped fiberglass or fiberglass reinforced plastic is not acceptable.
   b. Minimum inside dimensions shall be as follows (width x length x depth):
      Type A shall be 11.5 inches x 21 inches x 10 inches, (122311)
      Type B shall be 11.5 inches x 21 inches x 20 inches, (122322)
      Type C shall be 15.25 inches x 28.25 inches x 10 inches, (162911)
      Type D shall be 15.25 inches x 28.25 inches x 20 inches, (162922)
      Type E shall be 11.5 inches x 21 inches x 16 inches, (122317)
   c. Bottom edge of box or extension shall be footed with a minimum 1 1/4 inch flange.
   d. Ground boxes shall withstand 600 lbs. per sq. ft. applied over the entire sidewall with less than 1/4 inch deflection per foot length of box. Ground boxes and covers shall withstand a test loading of 20,000 lbs. over a 10 inch by 10 inch area centered on the cover with less than 1/2 inch deflection. Ground boxes and covers shall meet Western Underground Standards 3.6. Manufacturer shall supply certification by an independent laboratory or sealed by a Texas-Licensed Professional Engineer.
   e. Covers shall be 2 inch (nominal) thick polymer concrete. All hardware shall be stainless steel. Cover shall be secured with two 1/2 inch stainless steel bolts. Bolts shall be self-retaining and shall withstand a minimum of 70 ft-lbs. torque and shall have a minimum 750 lbs. straight pull out strength. Nuts shall be floating and shall provide a minimum of 1/2 inch movement from the center of the nut. Covers shall be skid resistant, minimum 0.5 coefficient of friction. Covers shall be interchangeable between manufacturers and shall conform to the dimensions shown herein. Unless otherwise approved by the Engineer, cover shall be legibly imprinted with the following words in minimum 1 inch letters:
      Ground Boxes containing wiring for traffic signals shall be labeled, Danger High Voltage Traffic Signal.
      Ground boxes containing wiring for illumination systems shall be labeled, Danger High Voltage Illumination.
      Ground boxes containing wiring for traffic management systems shall be labeled, Danger High Voltage Traffic Management.
      Ground boxes containing wiring for sign illumination systems shall be labeled, Danger High Voltage Sign Illumination.
      Ground boxes containing wiring for traffic signals that also contain illumination, powered by the signal electrical service, shall be labeled, Danger High Voltage Traffic Signal.

B. CONSTRUCTION METHODS

⚠1
1. Ground boxes shall be set on a 9 inch (minimum) bed of aggregate from 3/4 " up to 2" in size. Aggregate shall be in place prior to setting box and conduits shall be capped. Any gravel or dirt in conduit shall be removed.
2. When required by Item descriptive code, construction of an apron encasing a ground box including concrete and reinforcing steel shall not be paid for directly but shall be subsidiary to the ground box. Reinforcing steel may be field bent. Concrete for aprons shall be considered miscellaneous concrete for testing purposes. Aprons shall be cast in place.
3. Conduit holes may be cut in the walls of type B & D boxes at least 18 inches beneath the cover.
4. If, within the limits of this project, the Contractor must utilize an existing ground box equipped with a metal cover, the Contractor shall bond the cover to the grounding conductor with a 3 foot long flexible stranded jumper the same size as the grounding conductor. Connection of bonding jumper to metal ground cover shall not be paid for directly but shall be subsidiary to various bid items. The box(es) must be clearly shown on the plans with plan notes fully describing the work required.
5. If there are other ground boxes with metal Covers within the project limits but not involved in the contract, the Engineer may direct the Contractor to ground the covers, designating and identifying the specific boxes in writing. This work will be paid for separately.
6. Termination to metal ground box covers shall be made using a tank ground type lug.

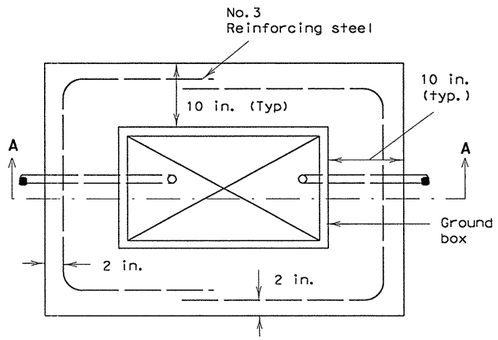

PLAN VIEW

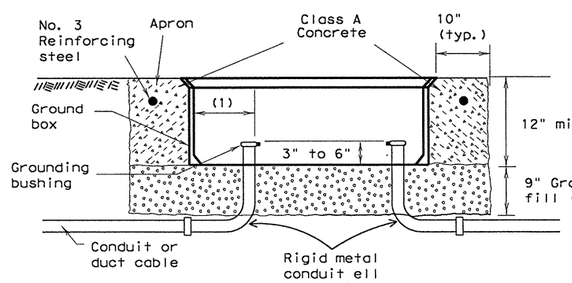

SECTION A - A

APRON FOR GROUND BOXES

(Where required)

(1) Final position of end of conduit shall not exceed one-half the distance to the side of box opposite the conduit entry.
(2) Place gravel "under" the box. not "in" the box. Gravel should not encroach on the interior volume of the box.
(3) Install bushing on the upper end of all ells.
(4) Where a ground rod is present in the ground box, connect it to any and all equipment grounding conductors using a listed connector.
(5) Maintain sufficient space between all conduits so as to allow for proper installation of bushings.
(6) All conduits shall be installed in a neat and workmanlike manner.
(7) All conduits installed in the ground box shall be sealed after completion of conductor installation and any required pull tests. Silicone shall not be used as sealant.

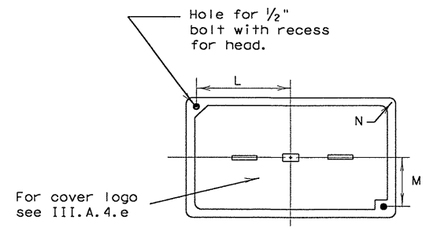

PLAN VIEW

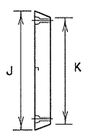

END

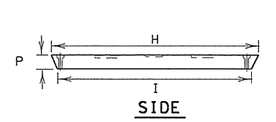

SIDE

GROUND BOX COVER

GROUND BOX COVER DIMENSIONS								
BOX	DIMENSIONS (INCHES)							
SIZE	H	I	J	K	L	M	N	P
A, B & E	23 1/4	23	13 3/4	13 1/2	9 7/8	5 1/8	1 3/8	2
C & D	30 1/2	30 1/4	17 1/2	17 1/4	13 1/4	6 3/4	1 3/8	2

5/03 Revision

⚠1 Revised notes.

STANDARD PLANS
TEXAS DEPARTMENT OF TRANSPORTATION
Traffic Operations Division

ELECTRICAL DETAILS- GROUND BOXES

ED(3)-03

© TxDOT January 1992

DN: KB	CK: JW	DW: DN	CK: GC	NEG NO.:

REVISIONS	STATE DISTRICT	FEDERAL REGION	FEDERAL AID PROJECT	SHEET
4-98	AUS	6	CC 337-1-29	188
12-00				
3-03	COUNTY		CONTROL / SECTION / JOB	HIGHWAY
5-03	WILLIAMSON		0337 / 01 / 029	SH 29

ELECTRICAL SERVICES NOTES

All work, materials, services, and incidentals, whether or not specifically shown on the plans, which may be necessary for a complete and proper electrical service installation as specified in the plans to obtain electrical power shall be paid for, performed, furnished and installed by the Contractor. The Contractor shall contact the Utility for metering and shall comply with all Utility requirements.

Primary line extensions, connection charges, meter charges, and other charges by the Utility company to provide power to the location shown, when required, shall be paid for under force account work. The costs associated with these charges shall be approved by the Engineer prior to engaging the Utility company to do the work. The Contractor shall consult with the appropriate Utility to determine costs and requirements, and shall coordinate the Utility's work as approved by the Engineer. The Contractor shall be reimbursed only the amount billed by the Utility. No additional amount for supervision of the Utility's work will be paid.

Materials shall be new and unused, materials and installation shall comply with the applicable provisions of the National Electrical Code (NEC) and National Electrical Manufacturers Association (NEMA) standards and shall be Underwriters Laboratories (UL) Listed. Electrical Service conduits, conductors, disconnects, contactors, circuit breaker panel sizes, and branch circuit breakers, shall be as shown in the Electrical Service Data elsewhere in the plans. Faulty fabrication or poor workmanship in any material, equipment, or installation shall be justification for rejection.

The Contractor shall submit for approval no less than six (6) copies of catalog cut sheets on electrical service materials. Submittals shall be legible and shall be marked to indicate which product on a cut-sheet is to be supplied. Where manufacturers provide warranties and guarantees as a customary trade practice, Contractor shall furnish to the State such warranties or guarantees.

The Contractor shall provide locks keyed with Master #2195 for all lockable electrical enclosures. Keys and locks become property of the State. Unless otherwise approved by the Engineer, enclosures shall not be energized until locks are provided and all bolts are installed.

Circuit directories, where provided, shall be filled out. All breakers and components in shop built panels and enclosures shall be labeled with duo-colored plastic labels. Letters shall be a minimum 3/8 " in height.

Enclosures with external disconnects that de-energize all equipment inside the enclosure, need not have dead front trim, except that incoming line terminations shall be protected from incidental contact.

When galvanized is specified for nuts, screws, bolts or miscellaneous hardware, stainless steel may be used. All wiring and components shall be rated for 75 degrees C. Minimum size for service entrance conductors shall be #6 XHHW.

I. Safety Switch. A safety switch, placed ahead of the meter, shall only be used when specified by the Utility and when shown on the Electrical Service Data. The switch shall be UL Listed, heavy duty type, 600 volt, unfused, with a UL type 3R enclosure and equipped with a solid neutral (s/n) assembly. The switch shall be padlockable in the "on" position.

II. Service Type. Electrical service types A, C, D, and T shall be as schematically detailed on ED(4) or ED(5). Other service types shall be as detailed elsewhere on the plans.

III. Branch Circuit Breakers. Circuit breakers shall be thermal magnetic and have a minimum interrupting capacity of 10,000 amps and a voltage rating compatible with their use. Circuit breakers shall be sized as shown in the electrical service data. Circuit breakers in panelboards and load centers shall be full size and designed exclusively for the panelboard or load center in use. Tandem and half-width breakers shall not be used. All circuit breakers shall be permanently and clearly marked identifying the circuit or device supplied. Circuit breakers shall be UL Listed to UL489.

IV. Circuit Breaker Panelboard. Panelboards shall be UL Listed. Panelboards shall have copper busses, a minimum of 6 one-pole spaces or as required in the electrical service data, and when required will be rated for service equipment. Enclosure shall meet or exceed UL type 3R classification. Panelboards shall have a threaded hub conduit entry for conduit entering the top of the enclosure. Circuit breakers shall be bolt-in type only.

V. Circuit Breaker Load Center. Load centers shall be UL Listed.
Load centers for type T services may have copper or aluminum busses, all other load centers will be copper bus only. Load center will have a minimum of 4 one-pole spaces, and shall be rated for service equipment. Enclosure shall meet UL type 3R classification. Load centers shall have a threaded hub conduit entry for conduit entering the top of the enclosure. Circuit breakers shall be plug-in type only. Load centers for type T services shall accomodate a maximum of 6 one-pole breakers.

VI. Separate or Auxiliary Enclosure. Separate enclosures for HOA, photocell and lighting contactors for types D & T Services shall be a UL Listed assembly with outer door. Interior shall have dead front trim. HOA switch operator shall extend through the dead front trim. Photocell shall be mounted inside the enclosure as described in paragraph XIII when required by descriptive code. Separate enclosures shall meet the construction requirements of paragraph VIII. E, except that separate enclosure shall not have external operating handle, need not have a data pocket and door may latch at only one point. All equipment may be located in one enclosure instead of two, when approved by the Engineer.

VII. Where a Type D or T service is provided, laminated "as built" drawings are required as shown on ED(5) VIII E; shall be delivered before completion of the work, to the Engineer in lieu of placement within these smaller enclosures. Conduit may not enter the back wall of a service enclosure penetrating the equipment mounting panel. Provide grounding bushings on all metal conduits, terminate bonding jumper to grounding bus. Grounding bushing is not required when the end of the metal conduit is fitted with a conduit sealing hub or threaded boss such as a meter base.

EXPLANATION OF ELECTRICAL SERVICE DESCRIPTIVE CODE

ELEC SERV TY X (XXX/XXX) XXX (XX) XX (X) XX (X)

Example: ELEC SERV TY A(240/480)100(NS)SS(E)GC(O)

Schematic Type

Service Voltage (V / V)

Disconnect Amp Rating
(000 indicates main lug only)

SS= Safety switch ahead of meter
NS= No switch ahead of meter and/or no meter required

Enclosure Type
GS= Galvanized steel (see ED(5)VIII,D)
SS= Stainless steel
AL= Aluminum

Photocell Mounting Location
T= Top of pole
E= Inside service/separate enclosure
L= Luminaire mounted
N= None

Service Support Type
GC= Granite concrete
OC= Other concrete
TP= Timber pole
SP= Steel pole
SF= Steel frame
OT= Pole by others or paid for separately
EX= Existing pole
TS= Switch gear to be placed on traffic signal pole
RT= Rectangular structural tubing
PS= Pedestal Service (see ED(5)VIII,G)

O= Overhead service
U= Underground service

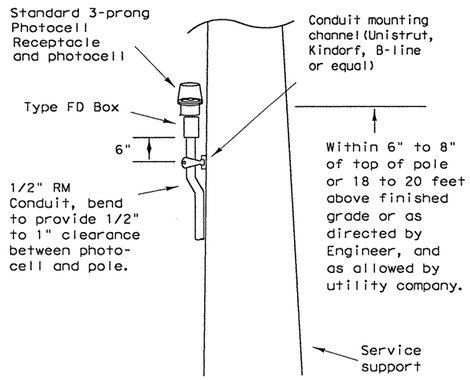

TOP MOUNTED PHOTOCELL

Conduit support spacing 3 feet from enclosure; 5 feet max.

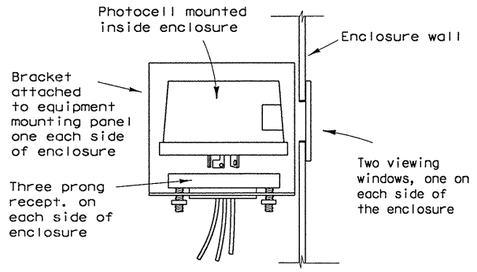

ENCLOSURE MOUNTED PHOTOCELL

For photocell specifications see ED(5), XIII.

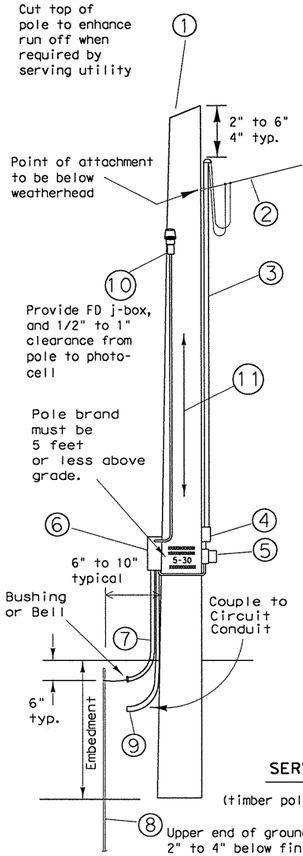

1 - Class 5 pole, height as required
2 - Service drop from utility company (attached below weatherhead)
3 - Service conduit and service entrance conductors (RMC) (See Electrical Service Data)
4 - Safety switch (when required)
5 - Meter (when required)
6 - Service enclosure
7 - No. 6 bare grounding electrode conductor in 1/2 " PVC to ground rod - extend 1/2 " PVC 6" underground.
8 - 5/8 " x 8' Copper clad ground rod - drive ground rod completely underground unless otherwise approved by the Engineer.
9 - RM conduit - same size as branch circuit conduit.
10 - Photocell and conduit - if top mounted. (See Electrical Service Data)
11 - When required by the serving utility provide bare #6 awg copper conductor. Run wire from pole top to butt wrap or copper butt plate. Protect conductor to a height of 8 ft above finish grade.

LIQUIDTIGHT FLEXIBLE METAL CONDUIT (LFMC)

(If applicable)

- Liquidtight flexible metal conduit, may be used when meter and service enclosure are mounted 90 to 180 degrees to each other. Size shall be same as service entrance conduit.
- LFMC shall not exceed 3 ft. and shall be securely supported within one ft. of each end. No strap required for LFMC shorter then 12"
- Each end of LFMC must have a grounding bushing or be terminated with a grounding fitting.
- A neutral conductor must be installed within the LFMC.
- Bend in liquidtight flexible metal conduit shall not exceed 180 degrees.
- A pull test is required on all installed conductors, at least six inches of free conductor movement shall be demonstrated to the satisfaction of the Engineer.

SERVICE SUPPORT TYPE TP (O)

(timber pole, overhead service, typical arrangement)

TIMBER POLE NOTES

1. Conduit and electrical conductors attached to the electrical service pole and underground within 12 inches of service pole shall not be paid for directly but shall be subsidiary to the service pole.
2. Pole top mounted photocell, install on north side of pole or in service enclosure as required. See Electrical Service Data.
3. Attach meter and service equipment with stainless steel or galvanized channel (Unistrut, Kindorf, or equal). Gain pole as required to provide flat surfaces for each strut. Paint ends of galvanized channel with zinc rich paint. Gain depth 5/8" max. Gain height 1 7/8" max. Strut to be 1" max. deep, and 1 5/8" wide max. Secure each strut section to timber pole with two galvanized or SS lag bolts, 1/4" diameter min. by 1 1/2" length min. Place flat cut galvanized or SS washer on each lag bolt. Gain pole in a neat and workmanlike manner.
4. Embedment depth shall be as required in Item 627 Treated Timber Poles.
5. Poles trimmed for excess length shall be trimmed from the top end only.

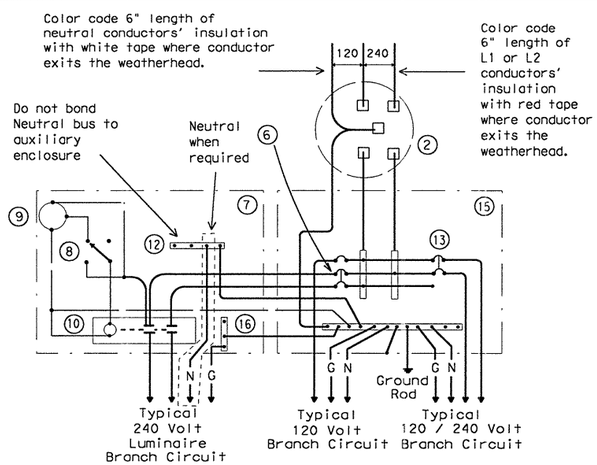

SCHEMATIC TYPE T
120/240 VOLTS - THREE WIRE

Install photocell and lighting contactor when shown on Electrical Service Data.

SCHEMATIC LEGEND

1 - omitted
2 - Meter (when required)
3 - Service Assembly Enclosure
4 - Main Disconnect Breaker (Not Used)
5 - Omit
6 - Circuit Breaker, 15 Amp typical for control circuit wiring
7 - Auxiliary Enclosure
8 - Control Station ("H-O-A" Switch)
9 - Photo Electric Control (enclosure-mounted shown)
10 - Lighting Contactor
11 - Power Distribution Terminal Blocks (Not Used)
12 - Neutral Bus required when 120 v. lights are controlled by lighting contactor
13 - Branch Circuit Breaker (See Electrical Service Data)
14 - Circuit Breaker Panelboard (Not Used)
15 - Load Center
16 - Ground Bus

——— Power Wiring
— — — Control Wiring
—N— Neutral Conductor (when required-to serve 120 v. loads only)
—G— Equipment grounding conductor-always required

STANDARD PLANS
TEXAS DEPARTMENT OF TRANSPORTATION
Traffic Operations Division

ELECTRICAL DETAILS- SERVICE SCHEMATICS AND SUPPORT-TYPE TP (OVERHEAD)

ED(4)-03

© TxDOT April 1998	DN: KB	CK: JW	DW: DN	CK: GC	MEG NO.:
REVISIONS 12-00 3-03	STATE DISTRICT: AUS	FEDERAL REGION: 6	FEDERAL AID PROJECT: CC 337-1-29		SHEET: 184
COUNTY: WILLIAMSON	CONTROL: 0337	SECTION: 01	JOB: 029	HIGHWAY: SH 29	

...\signals\ed5-03.dgn 09/21/2004 09:43:52 AM

SERVICE ENCLOSURE NOTES

VIII. Service Assembly Enclosures. All service assemblies and enclosures shall be UL Listed for the intended purpose.

A. Shop built or shop assembled service assemblies (all types except Type T and Type D without lighting contactor or enclosure mounted photo cell) and all auxilliary equipment enclosures mounted with service equipment and paid for as part of Item 628, "Electrical Services", shall be built or assembled by a UL Listed Industrial Control Panel shop and shall have a unique serial numbered UL Label with the words "LISTED ENCLOSED INDUSTRIAL CONTROL PANEL". The same or an additional label shall have the name, location, and phone number of the shop, the UL file number of the shop, the shop order or drawing number, date of manufacture or assembly, and the line voltage. The service assembly enclosure shall also be labeled "SUITABLE ONLY FOR USE AS SERVICE EQUIPMENT".

B. Conduit entries into the top of enclosures shall have threaded hub. Conduit entries through the equipment mounting back plate will not be allowed.

C. All service enclosure front doors shall be permanently labeled "DANGER HIGH VOLTAGE". Label shall be a self sticking type, intended for outdoor installation. Lettering style, layout and colors of red, black and white shall be as required by OSHA. Label letters shall be 1 to 1 1/2 inches high or as high as the enclosure door width will permit for smaller services. Separate or auxiliary lighting enclosures need not be OSHA labeled when mounted in the same viewing plane as the service enclosure front door. Where only one type of load is served by the service, the service door shall be marked using duo-colored plastic labels or self adhesive vinyl weather resistant labels, minimum of 1 inch high; applied in a neat and workmanlike manner. On the label will be the service number shown on the plans as well as identifying the load served specifically (i.e. lighting, landscaping, signals, traffic management or other wording as directed by the Engineer). Safety switches need not be OSHA labeled unless specifically required by the serving utility.

D. Type GS enclosures will only be allowed for service Types D and T without an enclosure mounted photocell and/or lighting contactor and the Type C panelboard. This spec will allow an "off the shelf" product meeting these specifications to be used. Type GS enclosures shall be made from pre-galvanized steel sheeting, hot dipped galvanized steel, or powder coat painted steel unless shown differently on the plans. Steel enclosures shall be painted inside and outside; galvanized enclosures may be painted. Unless otherwise approved by the Engineer, painted enclosures shall be gray, beige, white or light green. Panelboard/loadcenter enclosures shall meet UL type 3R requirements, shall have a dead front trim, and an outer padlockable door preventing unauthorized persons from operating contained equipment. Galvanized steel is no longer allowed for Types A, C, or custom-built D or T enclosures. If GS is shown in the descriptive code for any of these, an AL shall be provided.

E. Type AL enclosures for service Types A and C shall meet UL type 3R requirements and shall also meet additional requirements of this paragraph. The enclosure shall have both a main disconnect remote operator handle and a door latch handle. Die-cast handles are not acceptable. The main disconnect remote operator shall be flange-mounted, shall interlock the door when in the "on" position, and shall be padlockable in both the "on" or "off" positions. Door latch shall latch at two or more points, operate by a handle separate from disconnect switch and be capable of being locked. Door closure clamps will not be allowed. Lock must be keyed to Master #2195. All the enclosures shall have either a continuous stainless steel piano hinge with stainless steel pin or enclosures less than 30 inches may have two heavy duty hinges, those over 30 inches must have three. Heavy duty two and three point hinges shall have a 0.185 inch minimum diameter electro-zinc plated steel pin or a stainless steel pin. Two point hinged doors shall be rated for 56 lbs of loading. Three point hinged doors shall be rated for 70 lbs of loading. The door shall have an attached data pocket constructed of either thermoplastic or metal. Pocket shall be 12" x 12", unless that size will not fit in enclosure. The pocket shall then be as large as possible, as approved by the Engineer, and mechanically attached with stainless steel nuts and bolts, or stainless steel or aluminum rivets. Enclosure shall include an equipment mounting panel installed inside the enclosure on collar studs or tapped bosses, and constructed of a minimum 12 guage galvanized steel. Equipment mounting panels shall not be painted. Enclosure shall have factory installed external mounting feet. Enclosure door shall be capable of opening at least 130 degrees, with arm or other approved means to hold the door open. Only the enclosure exterior will be primed and painted. Paint color shall be beige or gray and shall be powder coat paint as shown below. Condensation drainage shall be provided in the bottom of the enclosure before leaving the factory. The Contractor shall prepare and submit a schematic drawing unique to an individual service. The approved drawing shall be laminated and placed in the document pocket of the service at the time of shipment to the job site. All applicable wiring diagrams and plan sheet layouts for all equipment and branch breaker circuits supplied by that service shall also be laminated and placed in the document pocket prior to shipping. Type AL enclosures for Type D and T services with enclosure mounted photocell and/or lighting contactor shall have the loadcenter interior mounted in an enclosure with properly adapted dead front trim. Types D and T shall not have a loadcenter exterior "can" mounted inside another enclosure meeting these specifications. (Do not put one enclosure inside another enclosure). Types D and T with enclosure mounted photocell and/or lighting contactor shall meet the additional requirements of this paragraph except that remote-operating handle will not be provided.

F. Type SS enclosures for Type A and C shall meet all the requirements above for their respective type AL. Type SS enclosures for D and T shall meet all the requirements above for their respective type AL. Stainless Steel shall not be painted.

G. PS enclosure shall be as detailed and specified on ED(8). Galvanized steel will not be allowed for any pedestal service. If GS is shown in the descriptive code an AL will be provided.

IX. Powder Coat Paint. Powder coating shall be either a polyester thermosetting resin, a zinc rich primer with a TGIC (triglycidyl isocyanurate) powder overcoating, or a zinc-rich epoxy powder, applied by either electrostatic spray or fluidized bed immersion, high temperature oven cured, high density, low gloss, 4 mil thick (minimum), coating. Adhesion shall meet the 5A or 5B classifications of ASTM D3359. Finish shall be uniform in appearance and free of scratches.

X. Main Disconnect. Main disconnect device shall be a circuit breaker, as specified in the Electrical Service Data, shall be two or three pole, and rated for the voltage and amperage specified. Circuit breaker shall be an UL Listed thermal-magnetic circuit breaker controlled by flange-mounted remote operator in the service assembly enclosure when required. Circuit breakers shall have a minimum interrupting rating of 10,000 Amps. When the utility company provides a transformer larger than 50 KVA, Contractor shall verify that the available fault current is less than the circuit breaker amps interrupting capacity (AIC) rating and shall provide documentation from the Utility to the Engineer. Documentation shall be submitted at the same time as other electrical submittals. Circuit breaker shall be UL Listed to UL489. No backfed breakers will be allowed for use as a main disconnect.

XI. Control Circuit. Control circuit protection shall be 15 amp circuit breaker.

XII. Control Station ("H-O-A" Switch). Control station shall be a maintained-contact, three position selector switch in an UL type enclosure. Switch shall be rated 600 volts and shall be fitted with "Hand-Off-Auto" legend.

XIII. Photo Electric Control. Photo electric control shall consist of a photocell, internal lightning arrester, and relay or bimetallic switch mounted inside a weatherproof enclosure with standard 3-prong twist lock photocell plug and receptacle. The enclosure shall be made of poly-acrylic with clear acrylic window. Enclosure chassis shall be molded thermosetting plastic. The photocell shall have a polyethylene gasket, and shall have a hermetically sealed cadmium sulfide cell. The arrester shall have an enclosed type expulsion arrester rated 2.0 kV sparkover with 5,000 amps follow-through. Relay or switch shall be time delay type with normally closed contacts. Photo electric control shall be rated a minimum of 1800 VA, voltage as required. Enclosure mounted photocells shall be the same as above except that the photocell shall be mounted inside the enclosure. The enclosure shall have two acrylic paned windows, or other material approved by the Engineer, one on each side of the enclosure. Each window shall be rectangular approximately one inch by two inches, round 2 inch diameter, or as otherwise approved by the Engineer. Bracket and photocell's receptacle will be mounted inside enclosure next to each window. Except for window side, 2" of clearance is required on all sides of photocell for ease of replacement. The photocell's receptacle is held in place by two mounting screws on bracket and located next to each window of the enclosure. The 3-prong twist lock photocell shall be mounted in a position to receive light from the window closest to the photocell. The photocell shall be mounted in a position to receive light from one window. Top of pole mounted photocells shall be mounted as shown on ED(4). The Contractor shall be responsible for proper operation of the photo-electric control. The Contractor shall move and/or adjust or shield the photocell from stray or ambient nighttime light or shall make any other adjustments required for proper operation. The photocell shall face North when practicable. Unless otherwise shown on the plans, the photocell shall turn on the illumination system at 1.0 +(-) 0.5 footcandle and turn off the illumination system at two footcandles higher than turn on.

XIV. Lighting Contactor. Lighting contactor shall be a UL Listed NEMA rated lighting contactor, two-pole or multipole as required, electrically held type designed to control high pressure sodium lighting loads, with silver alloy double break contacts rated at 240 volts, 480 volts or 600 volts as required. Lighting contactor shall not be the DIN rail mounted type.

XV. Power Distribution Terminal Blocks. Power distribution terminal blocks shall be rated for 600 volts and shall be used for line side connections to branch circuit breakers where more than one circuit breaker is required. Lugs on blocks shall be properly sized for conductors being used. Only one conductor shall be placed under each lug.

XVI. Neutral/Ground Bus. Neutral/ground bus shall be a factory made bus permanently bonded to the enclosure with properly sized lugs for grounding and neutral conductors.

SCHEMATIC LEGEND

1 - Safety Switch (when required)
2 - Meter (when required)
3 - Service Assembly Enclosure
4 - Main Disconnect Breaker (See Electrical Service Data)
5 - Omit
6 - Circuit Breaker, 15Amp
7 - Auxiliary Enclosure
8 - Control Station ("H-O-A" Switch)
9 - Photo Electric Control (enclosure-mounted shown)
10 - Lighting Contactor
11 - Power Distribution Terminal Blocks
12 - Neutral/Ground Bus
13 - Branch Circuit Breaker (See Electrical Service Data)
14 - Circuit Breaker Panelboard (See Electrical Service Data)
(If Type C is shown as AL or SS on descriptive code, this is the service assembly enclosure only. Panelboard enclosure is GS unless otherwise noted.
15 - Load Center

———— Power Wiring
— — — Control Wiring
——N—— Neutral Conductor (when required) serve 120 v. loads only)
——G—— Equipment grounding conductor-always required

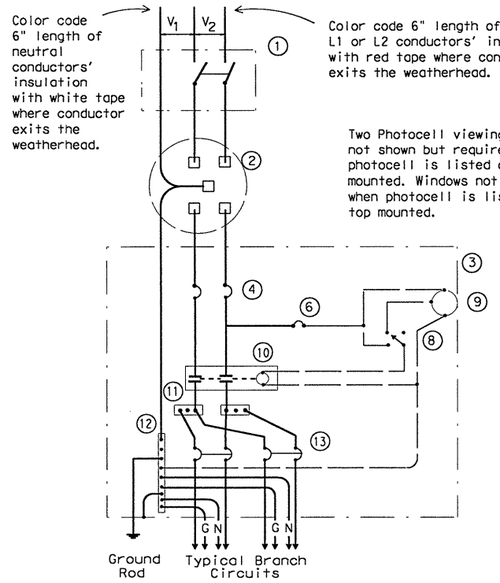

SCHEMATIC TYPE A

THREE WIRE

[Maximum feeder circuit size (High Mast Poles): 100 amps for two pole 480V, 125 amps for one or two pole 120V or 240V. Maximum branch circuit size: 50 amps.]

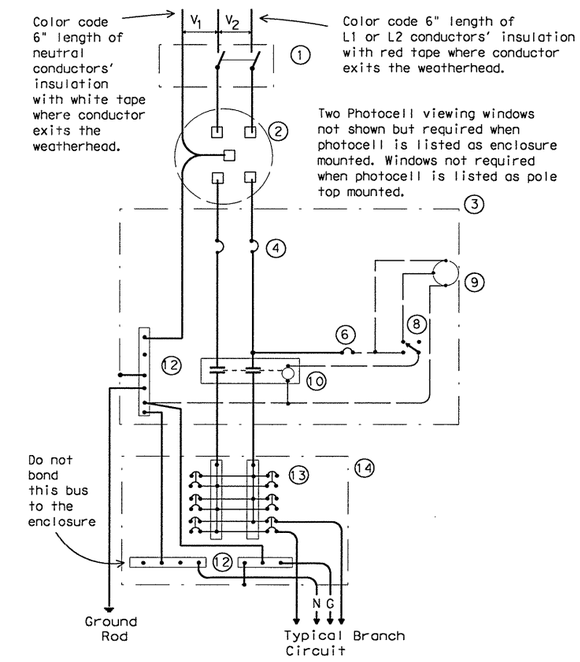

SCHEMATIC TYPE C

THREE WIRE

[Maximum feeder circuit size (High Mast Poles): 100 amps for two pole 480V, 125 amps for one or two pole 120V or 240V. Maximum branch circuit size: 50 amps.]

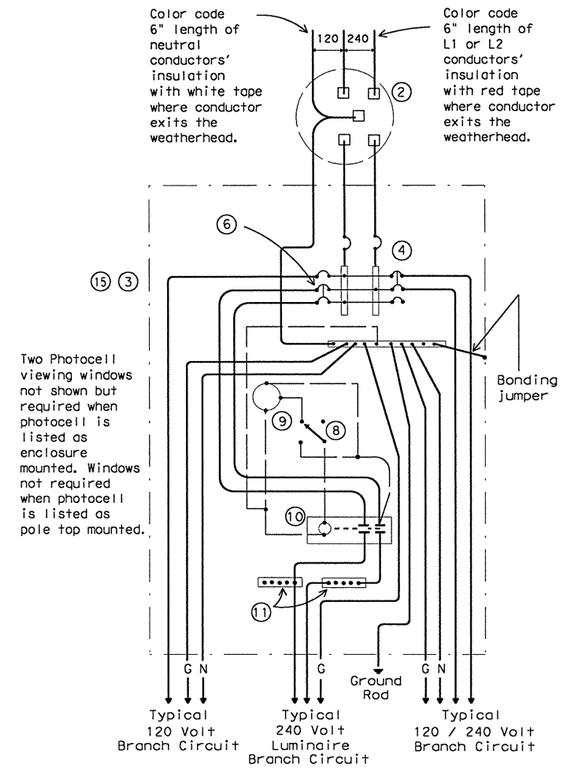

SCHEMATIC TYPE D

120/240 VOLTS - THREE WIRE

[Install photocell and lighting contactor when shown on Electrical Service Data. See Type D service notes.]

TYPE D SERVICE NOTES

Photocell and lighting contactor shall be located either in the same UL type 3R enclosure with load center or, if approved by Engineer, in separate enclosure. There shall be a window on each side of enclosure to allow operation of photocell. Both photocell contactor and breaker area shall have dead front trim. Enclosure, except for RT and PS supports, shall not exceed 36 inches in height or 16 inches in width unless approved by the Engineer. Ty D load center with lighting controls or TY D separate lighting control enclosure shall have power distribution blocks for a minimum of 4, #8 conductors per phase.

STANDARD PLANS
TEXAS DEPARTMENT OF TRANSPORTATION
Traffic Operations Division

ELECTRICAL DETAILS- SERVICE ENCLOSURE & NOTES

ED(5)-03

©TxDOT April 1998			DN: KB	CK: JW	DW: DN	CK: GC	MEG NO.:
REVISIONS 12-00 3-03	STATE DISTRICT	FEDERAL REGION	FEDERAL AID PROJECT				SHEET
	AUS	6	CC 337-1-29				190
	COUNTY		CONTROL	SECTION	JOB		HIGHWAY
	WILLIAMSON		0337	01	029		SH 29

...\signals\ed5-03.dgn 09/21/2004 09:43:53 AM

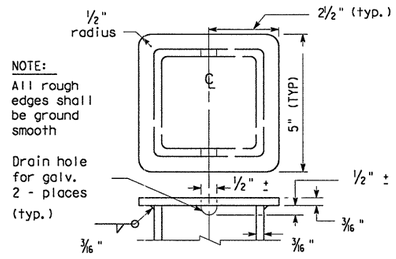

TOP OF POLE
TYPE SF & SP

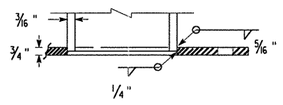

BOTTOM OF POLE
TYPE SF & SP

Color code 6" of grounded neutral conductors insulation with white tape where conductor exits the weatherhead. Color code 6" of L1 or L-2 Hot-ungrounded conductors insulation with red tape where conductor exits the weatherhead. Conductor free length, 12" min., 18" max.

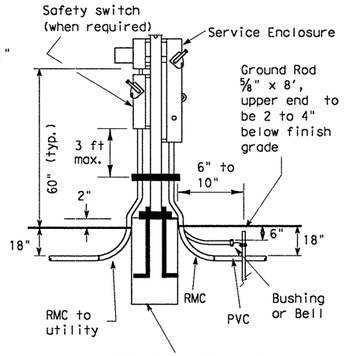

SERVICE SUPPORT
TYPE SP (U)
UNDERGROUND SERVICE
WITH SAFETY SWITCH

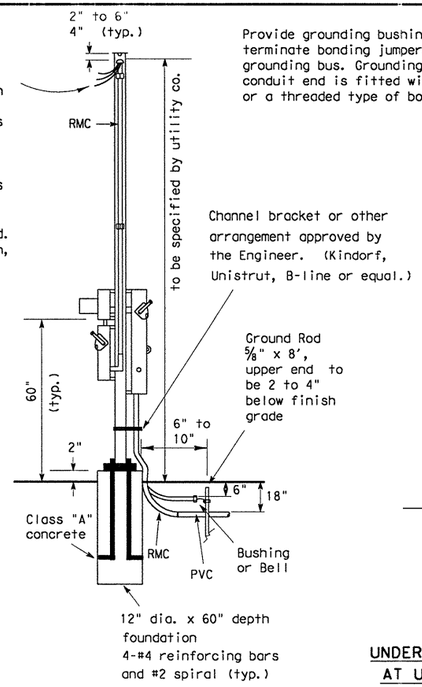

SERVICE SUPPORT
TYPE SP (O)
OVERHEAD SERVICE
WITH SAFETY SWITCH

Provide grounding bushings on all metal conduits, terminate bonding jumpers(min. #6 AWG. Copper) to grounding bus. Grounding bushing not required when conduit end is fitted with a conduit sealing hub or a threaded type of boss such as a meter hub.

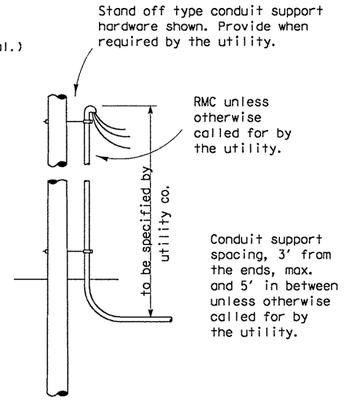

UNDERGROUND RISER
AT UTILITY POLE
(for underground service)

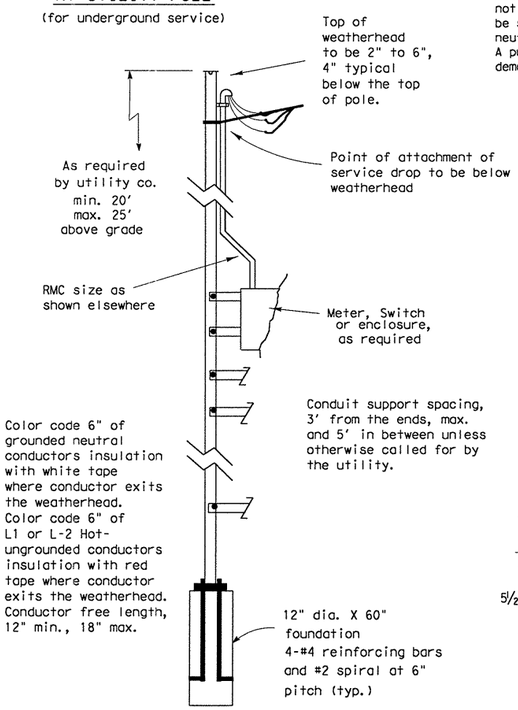

SERVICE SUPPORT TYPE SF (O)
OVERHEAD SERVICE

NOTES:

1. Support Type SP and SF: Fabricated from 4" x 4" x 3/16 " square structural tubing, ASTM A500 Grade A or G or equal. Base plate shall be 3/4 " plate, ASTM A36 or equal. All equipment and conduit shall be mounted on galvanized channel strut, 1 1/2 " x 1 5/8 " x 12 guage galvanized steel channel (Unistrut, Kindorf, B-line or equal) clamped with channel hardware, bolted or welded to vertical member as approved by the Engineer.
2. Paint field cut ends of all channels with zinc-rich paint.
3. All Steel Poles (SP and SF) shall be hot-dip galvanized after fabrication. Poles for overhead service shall be fitted with eyebolt or similar fitting, as approved by the utility company, for attachment of sevice drop to the pole.
4. All conduit and conductors attached to the electrical service and within 12 inches of the electrical service will not be paid for directly, but shall be subsidiary to the electrical service. All conduit and conductors from the utility company pole to the point 12 inches from the electrical service, including conduit and conductors required for the utility pole riser when furnished by the Contractor, will be paid for separately.
5. All mounting hardware and installation details of services shall be in accordance with utility company specifications.
6. Anchor bolts for underground service supports shall be 3/4" x 18" x 4" (dia. x length x hook length). Anchor bolts for overhead services shall be 3/4" x 56" x 4". Anchor bolts shall be provided with leveling nuts.
7. Conduit for grounding electrode conductor (ground rod wire) shall be 1/2" PVC. All other conduit on electrical services shall be rigid metal conduit. Service entrance conduit size shall be as shown elsewhere. Conduit for branch circuit entry to enclosure shall be the same size as that shown on the layout sheets for branch circuit conduit. Rigid metal conduit shall extend to the rigid metal elbow and then be coupled to the type conduit shown on the layout for that particular branch circuit. RMC shall have grounding bushings in enclosures.
8. If pole is painted, each separate painted piece shall have a bonding jumper attached to a tapped hole.
9. Sheet metal screws are not allowed for bonding. Provide 1/4-20 machine screws. Remove all non-conductive material at contact points. Terminate bonding jumper using listed device. Bonding jumper min. #6 AWG Copper. Make up all threaded bonding connections wrench tight.
10. Conduits entering enclosure from underground shall be sealed at both ends. Silicone sealant will not be allowed.
11. ⚠ Ground rod clamp to be UL listed for direct burial.
12. Service entrance conductors shall exit separately bushed non-metallic openings in weatherhead.
13. Free conductor at weatherhead to be 12 in. min., 18 in. max., or as required by utility. Color code grounded-neutral conductor with white tape covering 6 in. of conductor. Color code L1 or L2 Hot un-grounded conductor with red tape covering 6 in. of conductor. Service drop and service entrance conductors must not contact metal pole in such a manner as to result in abrasion of insulated conductors.
14. Conduit support spacing to be max. 3 ft. from ends, and max. 5 ft. in between.
15. Shop drawings are not required for service support structure unless specifically stated elsewhere or as directed by the Engineer.
16. Service enclosure to be labeled as specified on ED(5) VIII C.
17. Liquidtight flexible metal conduit (LFMC) may be used between the meter and service enclosure when they are mounted 90 to 180 degrees to each other. LFMC shall be the same size as service entrance conduit. LFMC shall not exceed 3 ft. and shall be securely supported within one foot of each end. LFMC shorter then 12" need not be strapped. Each end of LFMC must have a grounding bushing or be terminated with a grounding fitting. A neutral conductor must be installed within the LFMC. Bend in LFMC shall not exceed 180 degrees.
A pull test is required on all installed conductors, at least six inches of free conductor movement shall be demonstrated to the satisfaction of the Engineer.

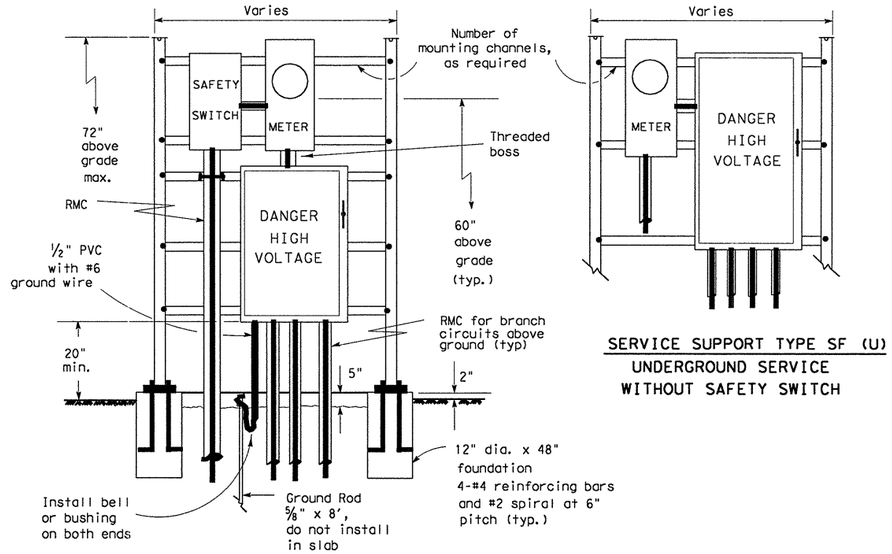

SERVICE SUPPORT TYPE SF (U)
UNDERGROUND SERVICE
WITH SAFETY SWITCH
(Typical Arrangement)

SERVICE SUPPORT TYPE SF (U)
UNDERGROUND SERVICE
WITHOUT SAFETY SWITCH

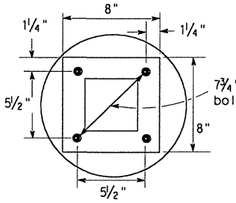

BASE PLATE DETAIL
TYPE SF & SP

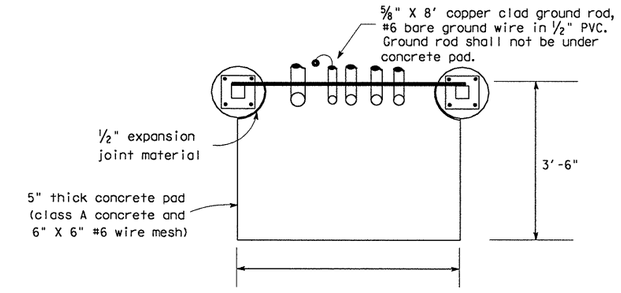

SERVICE SUPPORT TY SF (O) & SF (U)
TOP VIEW

5/03 Revision

⚠ Revised notes.

STANDARD PLANS
TEXAS DEPARTMENT OF TRANSPORTATION
Traffic Operations Division

ELECTRICAL DETAILS-SERVICE SUPPORT TYPES SF & SP

ED(6)-03

©TxDOT January 1992

DN: KB	CK: JW	DW: DN	CK: GC	NEG NO.:

REVISIONS	STATE DISTRICT	FEDERAL REGION	FEDERAL AID PROJECT				SHEET
4-98	AUS	6	CC 337-1-29				191
12-00	COUNTY		CONTROL	SECTION	JOB		HIGHWAY
3-03	WILLIAMSON		0337	01	029		SH 29
5-03							

...\signals\ed5-03.dgn 09/21/2004 09:43:53 AM

NOTES:

1. Luminaire conductors shall not be looped through controller cabinet.
2. Electrical system to include an equipment grounding conductor noted here as "G". All exposed metal parts are to be bonded to grounding conductor.
3. Photocell, when required, shall be mounted at top of pole or in enclosure as shown on ED(4) and ED(5) and as required by descriptive code.
4. Roadway lighting fixtures, when required, shall be in accordance with the material and construction methods of the Item, "Roadway Illumination Assemblies" except for the test period for proper operation of the luminaires. Installed roadway lighting luminaires and internally lighted street name signs shall be tested for proper operation as a part of the associated traffic signal system.
5. Internally lighted street name signs (ILSN), when required, shall be in accordance with the Item "Internally Lighted Street Name Signs". Because of the electrical isolation of ILSN hinges, a #12 green grounding conductor shall be run to the ILSN fixture.
6. Install ground rod at alternate location when directed by the Engineer. Maintain a minimum of 8 ft in contact with the earth.
7. Liquidtight flexible metal conduit (LFMC), may be used when meter and service enclosure are mounted 90 to 180 degrees to each other. LFMC shall be same size as service entrance conduit. LFMC shall not exceed 3 ft. and shall be securely supported within one foot of each end. No strap required for a LFMC shorter than 12". Each end of LFMC must have a grounding bushing or be terminated with a grounding fitting. A neutral conductor must be installed within the LFMC. Bend in liquidtight flexible metal conduit shall not exceed 180 degrees.
8. Minimum embedment depth as per Item 627 Treated Timber Poles.
9. Pole to be set plumb.
10. Back fill thoroughly tamped in 6 in. lifts. Place 6 inches additional backfill above grade around pole base to allow for settling, as per Item 627.
11. Excess pole length shall be trimmed from the top at a slope to aid water run off.
12. Gain pole two places for each meter, service, separate or auxiliary enclosure. See ED(4) for details.
13. All illumination and power conductors to be pull tested and megged. Do not meg traffic signal cable.
14. Enclosures are to be locked, and ground box covers are to be bolted before power is applied to the circuit.
15. Conduits entering top of enclosures to be fitted with conduit sealing hub or threaded boss, such as meter hub. Off-set nipple, when required, shall not be zinc-die-pressure cast. All metal conduits not connected to conduit sealing hub, or threaded boss must have a grounding bushing. Terminate bonding jumper to ground bus. All conduits entering enclosures shall be sealed. Silicone shall not be allowed.

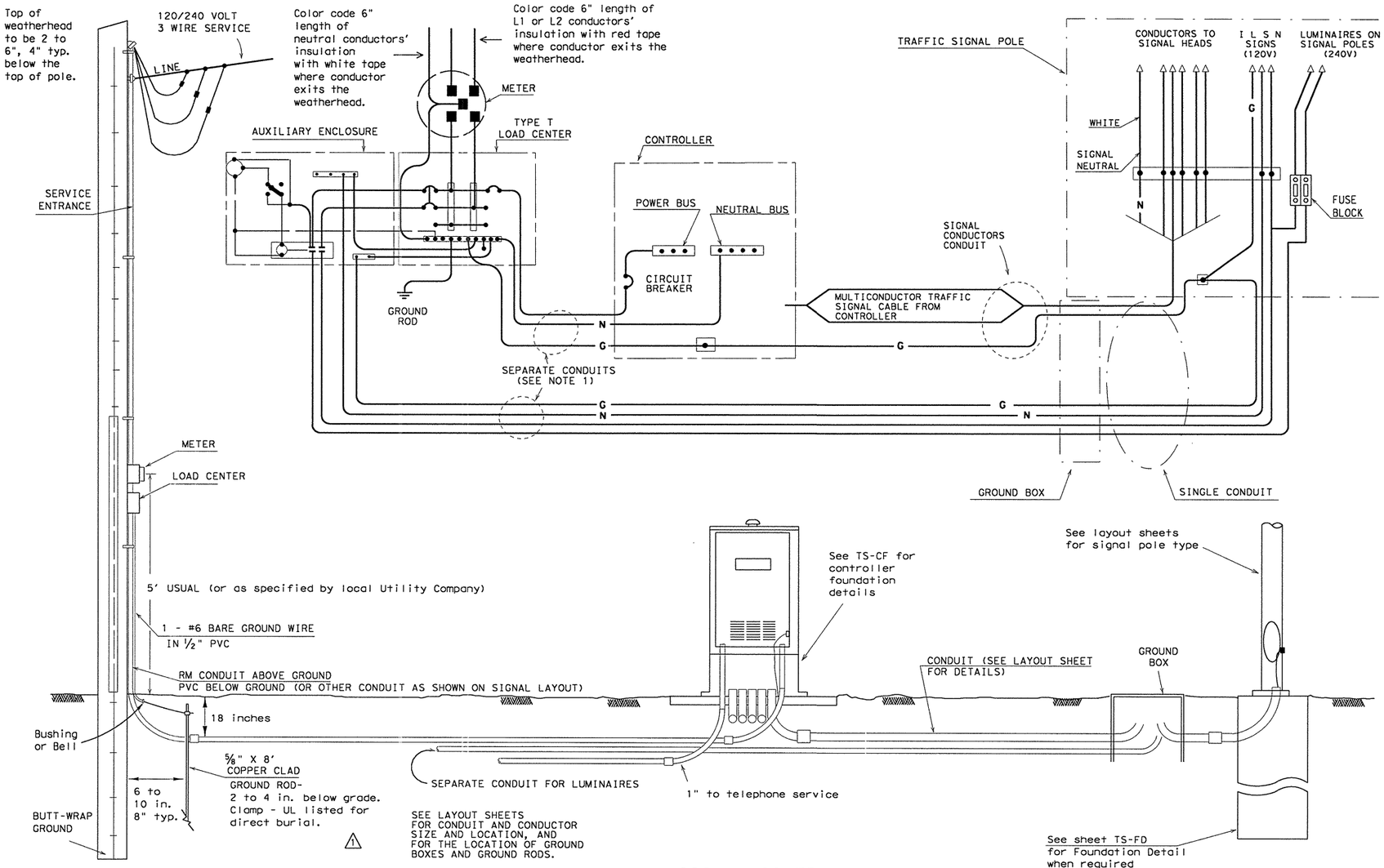

ELECTRICAL SERVICE

(TYPE T TIMBER POLE SHOWN AS EXAMPLE, SEE ELECTRICAL DETAILS, LAYOUT SHEETS, AND ELECTRICAL SERVICE DATA SHEET FOR SERVICE REQUIRED AND FOR DETAILS.)

SIGNAL CONTROLLER

SIGNAL POLE

Unless shown elsewhere in the plans, electrical service data for Types D and T shall be as follows.

ELECTRICAL SERVICE DATA

ELECTRICAL SERVICE DESCRIPTION(SEE ED(4))	SERVICE CONDUIT SIZE (RMC)	SERVICE CONDUCTORS NO./SIZE	SAFETY SWITCH AMPS	MAIN DISCONNECT CKT. BRK. POLE/AMP	TWO-POLE CONTACTOR AMPS ***	PANELBD./ LOADCENTER AMP RATING (MIN)	CIRCUIT NO.	BRANCH CKT. BRK. POLE/AMPS	KVA LOAD
TY D (120/240)070(NS)AL(E)**(*)	1¼ ⚠1	3/#4	N/A	2P/70	30	100	T.S. Lighting	1P/50 2P/15	<7.1
TY T (120/240)000(NS)GS(E)**(*)	1¼ ⚠1	3/#4	N/A	None	30	70	T.S. Lighting	1P/50 2P/15	<7.1

*** Eliminate photocell, contactor and seperate enclosure if lighting, or internally lighted signs are not required by plans
** See descriptive code in estimate for service support type.
* See descriptive code in estimate for overhead or underground service.

5/03 Revision

⚠1 Revised notes.

STANDARD PLANS
TEXAS DEPARTMENT OF TRANSPORTATION
Traffic Operations Division

ELECTRICAL DETAILS- TYPICAL TRAFFIC SIGNAL SYSTEM DETAILS

ED(7)-03

© TxDOT January 1992

DN: KB	CK: JW	DW: DN	CK: GC	MEG NO.:

REVISIONS	STATE DISTRICT	FEDERAL REGION	FEDERAL AID PROJECT	SHEET
4-98	AUS	6	CC 337-1-29	192
12-00				
3-03	COUNTY		CONTROL SECTION JOB	HIGHWAY
5-03	WILLIAMSON		0337 01 029	SH 29

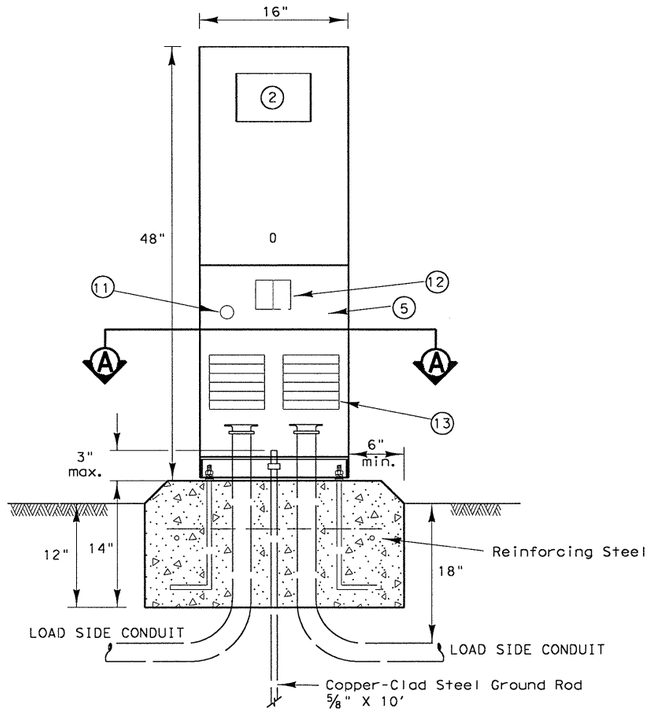

Note: Ells in foundation are rigid metal, size called for on the plans. Extension conduits from these ells may be PVC, provided ends of rigid metal conduits are more than 2 in. below top of concrete foundation. Where extension conduits are metal, grounding bushing must be installed and a bonding jumper properly terminated.

FRONT VIEW

Ty C shown, Ty A similar except that Ty A shall have individual circuit breakers mounted on a equipment mounting panel. CB Handles shall protrude through hinged deadfront trim.

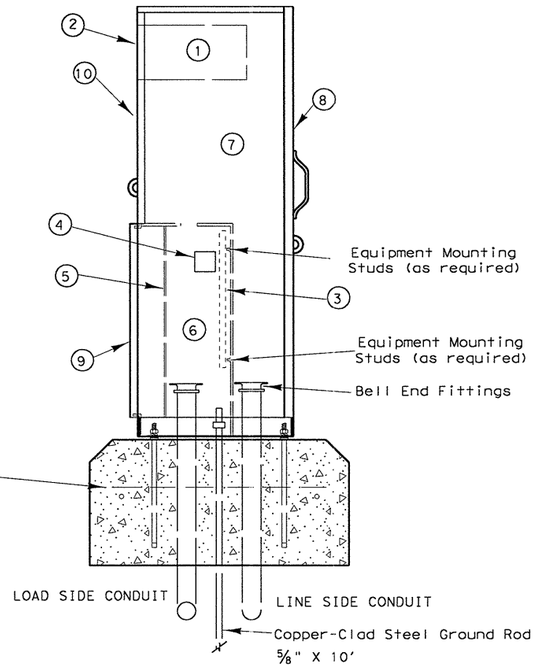

SIDE VIEW

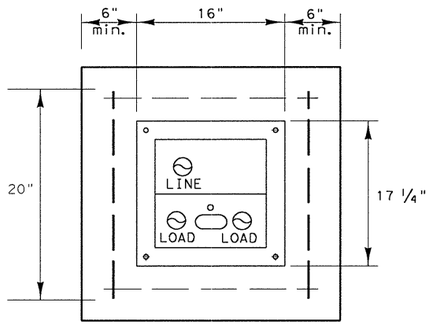

SECTION A-A

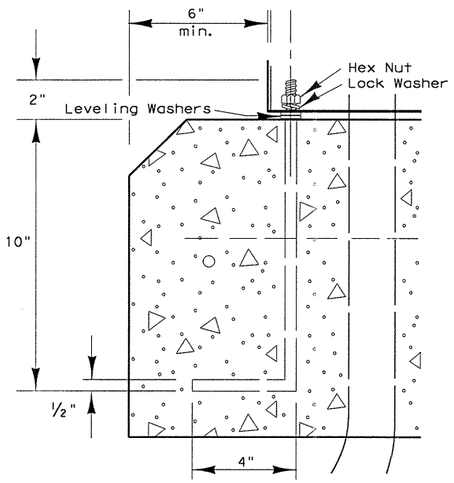

ANCHOR BOLT DETAIL

GENERAL NOTES

1. The pedestal service shall be UL type 3R, and shall be constructed of a minimum of 12 guage stainless steel or aluminum as required by descriptive code. Stainless steel shall not be painted. For aluminum, the finish shall be an electrostatic applied polyurethane baked on powder, light green in color, or color as shown elsewhere and as approved by the Engineer. The front of the interior dead front trim shall be permanently labeled, "Danger High Voltage" with OSHA style label. The exterior of the pedestal service door shall be permanently labeled with a placard as to its use (i.e. Roadway Lighting, Traffic Signals, etc.). Placard shall be neat and professional in appearance. Lettering shall be 1" minimum height.
2. Utility Access Door shall have stainless steel piano hinge and provisions for padlocking.
3. Pedestal door shall have stainless steel piano hinge and stainless steel latch with provisions for padlocking.
4. Meter Access shall be hinged and capable of padlocking.
5. All mounting hardware and installation details of services shall be in accordance with utility company specifications. The Contractor is responsible for contacting the local utility company and obtaining their approval of pedestal details prior to making submittal to the Department and prior to constructing the electrical pedestal service. Any changes required by the utility company shall be noted on the submittals.
6. Meter Socket shall be a minimum of 100 amp rating and shall comply with the local utility requirements.
7. Photoelectric Control shall meet the requirements as shown on ED(5). Shield to control stray light is allowable. The Contractor shall be responsible for proper operation of the photo-electric control. The Contractor shall move and/or adjust or shield the photocell from stray or ambient nighttime light or shall make any other adjustments required for proper operation. The photocell shall face North when practicable. Unless otherwise shown on the plans, the photocell shall turn on the illumination system at 1.0 +(-) 0.5 foot-candle and turn off the illumination system at two footcandles higher than turn on.
8. The Control Station (H-O-A Switch) shall be as shown on ED(5) except that H-O-A Switch operating handle shall protrude through hinged deadfront trim and NEMA 1 enclosure will not be required.
9. Concrete for pedestal service foundation shall be class A or C and shall be in accordance with Item 420, "CONCRETE STRUCTURES", except that concrete will not be paid for directly but shall be considered subsidiary to Item 628, "ELECTRICAL SERVICES".
10. Reinforcing steel shall be #4 rebar in accordance with Item 440, "REINFORCING STEEL".
11. Anchor bolts shall be A36M55 in accordance with Item 449, "ANCHOR BOLTS". Anchor bolts shall be 1/2 inch x 12 inches x 4 inches (dia. x length x hook length).
12. All conduit and conductors attached to the pedestal service and within 12 inches of the pedestal service will not be paid for directly, but shall be subsidiary to the pedestal service. All service conduit and conductors from the utility company transformer to a point 12 inches from the pedestal service shall be paid for separately. Service conduit shall be the size and type as shown in the Electrical Service Data.
13. Dimensions may vary to accomodate required equipment, utility company requirements, or manufacturer's standard equipment dimensions. The Contractor shall submit to the Engineer for approval, six (6) copies of brochures and/or drawings of the pedestal service to be supplied, including actual dimensions, and a paint color sample.
14. A separate enclosure as shown on ED(4) or ED(5) for photocell shall not be used for pedestal services. Photocell shall be installed as shown here.
15. The pedestal door shall have a mechanically attached data pocket on the inside. Pocket shall be either metal or thermoplastic and shall measure at least 12 inches by 12 inches. The Contractor shall prepare and submit a schematic drawing unique to an individual service. The approved drawing shall be laminated and placed in the document pocket of the service at the time of shipment to the job site. All applicable wiring diagrams and plan sheet layouts for all equipment and branch breaker circuits supplied by that service shall also be laminated and placed in the document pocket prior to shipping.
16. ⚠ Ground rod clamp to be UL listed for direct burial. All non-conductive coating to be removed from ground rod at clamp location. Ground rod wire to be #6 AWG solid copper. Metal conduit ells to have grounding bushing and bonding jumpers correctly installed.
17. All conduits entering enclosures from underground must be sealed. Silicone shall not be allowed.
18. All conductors shall be megged and pull tested. Traffic signal cable not to be megged after connection, as electronics will be damaged.
19. Top of concrete foundation to be finished in a neat and workman like manner. If leveling washers are used, no more than 1/8 in. height shall be used at any one corner. Maximum dip or rise in foundation is not to exceed 1/8 in per foot. When properly installed, top of service enclosure shall read level front to back and side to side within 1/4 in. Rocking or movement of the service enclosure shall be repaired by the contractor at no cost to the state.
20. Liquidtight flexible metal conduit shall not be allowed on PS type services.

LEGEND

1. METER SOCKET, (when required)
2. METER SOCKET WINDOW, (when required)
3. EQUIPMENT MOUNTING PANEL
4. PHOTO ELECTRIC CONTROL WINDOW, (when required)
5. HINGED DEADFRONT TRIM
6. LOAD SIDE CONDUIT AREA
7. LINE SIDE CONDUIT AREA
8. UTILITY ACCESS DOOR, with handle
9. PEDESTAL DOOR
10. HINGED METER ACCESS
11. CONTROL STATION (H-O-A Switch)
12. MAIN DISCONNECT
13. BRANCH CIRCUIT BREAKERS

5/03 Revision

⚠ Revised notes.

STANDARD PLANS
TEXAS DEPARTMENT OF TRANSPORTATION
Traffic Operations Division

ELECTRICAL DETAILS
ELECTRICAL SERVICE SUPPORT
PEDESTAL SERVICE TYPE PS

ED(8)-03

©TxDOT April 1998

DN: KB	CK: JW	DW: DN	CK: GC	NEG NO.:

REVISIONS	STATE DISTRICT	FEDERAL REGION	FEDERAL AID PROJECT	SHEET
12-00 3-03 5-03	AUS	6	CC 337-1-29	193

COUNTY	CONTROL	SECTION	JOB	HIGHWAY
WILLIAMSON	0337	01	029	SH 29

...\signals\ed5-03.dgn 09/21/2004 09:43:53 AM

Color code grounded - neutral conductor with white tape covering 6 in. of conductor length. Color code L1 or L2 Hot conductor with red tape covering 6 in. of conductor length. Where conductors exit weatherhead, conductors free length shall be 12 in. min., 18 in. max.

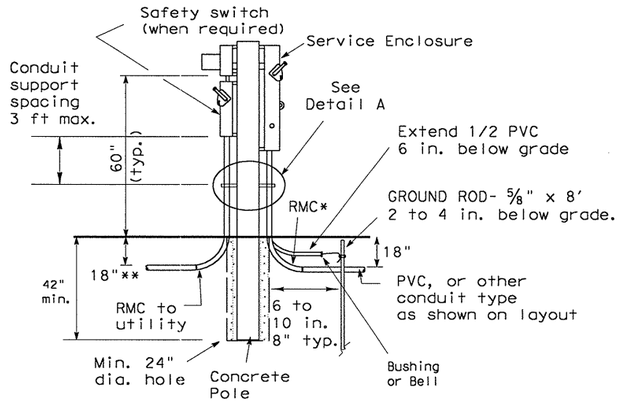

CONCRETE SERVICE SUPPORT

(Underground)

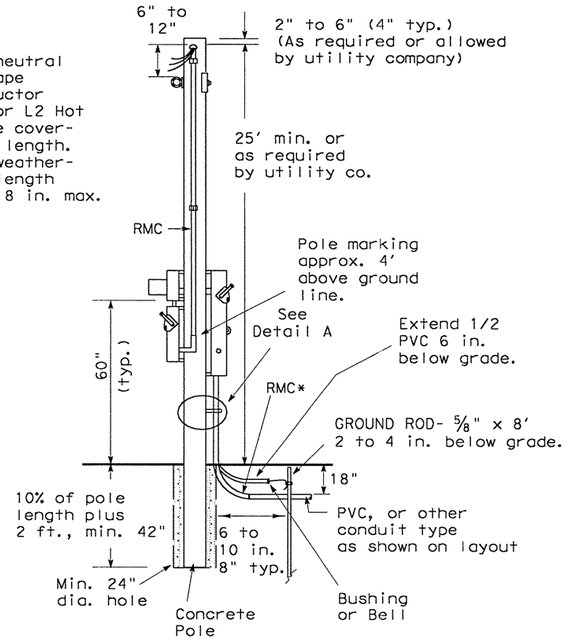

CONCRETE SERVICE SUPPORT

(Overhead)

*same size as branch circuit conduit shown on layout sheets.
** or as required by utility company.

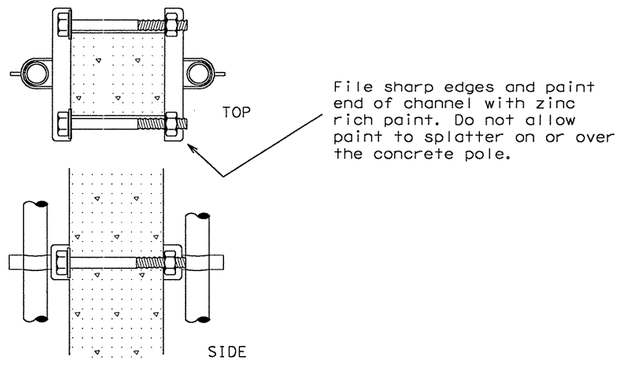

DETAIL A

Channel bracket or other arrangement approved by the Engineer. (Kindorf, Unistrut, B-line or equal)

Note: Attach channels with stainless steel concrete anchors (max. 1" depth), square U-bolts or back to back channel with long bolts, or other secure mounting as approved by the Engineer. Bolts galvanized in accordance with ASTM A153. Channel shall be galvanized.

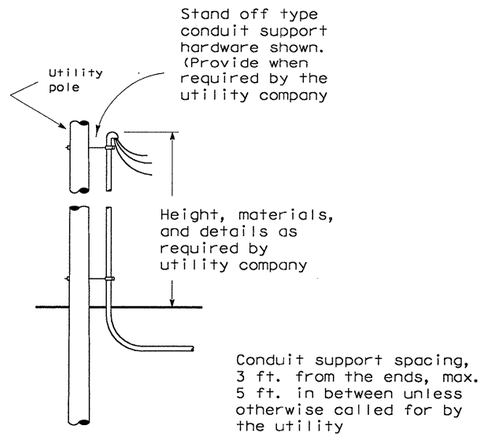

UTILITY POLE CONNECTIONS

(When underground service is required by descriptive code and utility is overhead.)

NOTES:

Electrical service support structures bid as type GC or OC shall be concrete poles and shall meet the following specifications.

1. Poles shall be prestressed concrete and suitable for direct embedment into the ground without special foundations.
2. Poles bid as type "GC" shall be a granite concrete mixture consisting of gray Portland cement with exposed pink granite aggregate. Poles bid as type "OC" shall be other concrete mixture as shown elsewhere on the plans or as directed by the Engineer.
3. Poles greater than 10 ' shall be square in cross-section, with chamfered corners, and shall have a standard taper of 0.162 inch per foot. Cross sectional dimensions shall not deviate by more than 3/8 inch. Poles 10' or less may be tapered .162"/ft or may be non-tapered. The allowable tolerance shall be plus 3 inches and -2 inches in the overall length. The width of the bottom face of the pole as it is cast may be less than the top face. All small cavities shall be cleaned, saturated with water and then filled with mortar. A small cavity is defined as one larger than 1/4 inch but smaller than 3/4 inch in diameter, and less than 3/8 inch deep. Larger non-structural cavities and spalls shall be repaired by opening side of the damaged area on a 1 to 1 slope using a mechanical grinder, cleaning thoroughly and filling with a high-strength non-shrink concrete repair material. Poles with other defects may be repaired only upon authorization of and using the method prescribed by the Engineer.
4. The end of each steel reinforcing strand in the tip and butt shall be burned back to a minimum depth of 1/2 inch. The holes left by the removal of the strand shall be thoroughly cleaned of any loose residue. The holes shall then be completely filled with non-shrink grout and smoothed evenly with tip or butt surface.
5. Prestressing strands shall have a minimum concrete cover of 1 1/4 inch.
6. A straight line joining the edge of the pole at the butt and the edge of the pole at the top shall not be distant from the surface of the pole at any point by more than 3/8 inch for each 10 feet of length.
7. The chloride content of the concrete mix, including all ingredients shall be 0.4 pounds per cubic yard, or less.
8. Concrete used in poles shall have a compressive strength at transfer of not less than 4,000 PSI, and a 28-day compressive strength of not less than 7,000 PSI.
9. Materials shall comply with the latest version of the following standards:
   a) Portland Cement - ASTM C105
   b) Admixtures - ASTM C494
   c) Aggregates - ASTM C33 or C330
   d) Reinforcing Bars - ASTM A615
   e) Cold-Drawn Spiral Wire - ASTM A82
   f) Prestressing Strand, 270K - ASTM A416
10. Poles greater than 10' shall have a 4 inch tip and 3/8 inch strands. Poles 10' or less shall have a 5 inch min. tip and 3/8 inch strands. Pole shall have a load capacity of greater than 1188 lbs. applied 2 ft. below tip.
11. Poles shall be capable of withstanding single point pick up from the horizontal position when lifting from a point 30% of the overall length down from the tip.
12. All poles shall be marked by imprinting on one face. Marking shall indicate manufacturer's name, year of manufacture, length and name or type of pole. Marking shall be located approximately 4 ft. above ground line.
13. Dunnage points, two-point pickup locations for handling pole in horizontal position, and one-point pickup locations for use in raising the pole to a vertical position and handling in setting operation shall be marked on the pole with durable ink or paint or cast into the pole. These marks shall be small but conspicuous.
14. Poles shall be embedded 42 inches or 10% of length plus 2 ft. into the ground whichever is greater.
15. When required by utility company for overhead services, poles longer than 10 feet shall have a #6 solid ground wire running the entire length exiting within 6 inches from the top and bottom of the pole. The Contractor shall connect the bottom to a butt wrap or butt plate grounding device.
16. All conduit and conductors attached to the service support and within 12 inches of the service support will not be paid for directly, but shall be subsidiary to the electrical service. All conduit and conductors from the utility company pole to a point 12 inches from the service support, including conduit and conductors required for the utility pole riser when furnished by the Contractor, will be paid for separately.
17. All mounting hardware and installation details of services shall be in accordance with utility company specifications.
18. All conduit on service supports shall be rigid metal conduit except the conduit for grounding electrode conductor (ground rod wire) shall be 1/2 inch PVC. Service entrance conduit size shall be as shown elsewhere. Conduit for branch circuit entry to enclosure shall be the same size as that shown on the layout sheets for branch circuit conduit. Rigid metal conduit shall extend a minimum of six inches underground and then coupled to the type conduit shown on the layout for that particular branch circuit. RMC shall have grounding bushings in enclosures.
19. Backfill shall be in accordance with Item 400 except for measurement and payment. Backfilling will not be paid for directly but shall be subsidiary to the various bid items.
20. Liquid tight flexible metal conduit (LFMC), may be used when meter and service enclosure are mounted 90 to 180 degrees to each other. LFMC shall not exceed 3 ft. and shall be securely supported within one ft. of each end. Each end of LFMC must have a grounding bushing or be terminated with a grounding fitting. A neutral conductor must be installed within the LFMC. Bend in LFMC shall not exceed 180 degrees. LFMC may not be installed on utility company owned poles. A pull test is required on all installed conductors, at least six inches of free conductor movement shall be demonstrated to the satisfaction of the Engineer.
21. Contractor may order concrete service support structures with 3/4" hole near top of pole for eye bolt type bracket. Eye bolt bracket may be installed as means of overhead service drop anchoring point by utility. Pole may also be center drilled in the field for installation of eye bolt bracket. When used, install bracket 6" to 12" below weatherhead.

STANDARD PLANS
TEXAS DEPARTMENT OF TRANSPORTATION
Traffic Operations Division

ELECTRICAL DETAILS- SERVICE SUPPORT TYPES GC AND OC

ED(9)-03

© TxDOT April 1998			DN: KB	CK: JW	DW: DN	CK: GC	MCG NO.:
REVISIONS 12-00 3-03	STATE DISTRICT	FEDERAL REGION	FEDERAL AID PROJECT				SHEET
	AUS	6	CC 337-1-29				194
	COUNTY			CONTROL	SECTION	JOB	HIGHWAY
	WILLIAMSON			0337	01	029	SH 29

I. DUCT CABLE

A. Duct cable shall be placed by the open trench method at a minimum depth of 18 inches. Bends in duct cable shall be made in the manner recommended by the manufacturer; minimum bending radius shall be 20 inches for 1 1/2 inch duct and 26 inches for 2 inch duct. Unless otherwise approved by the Engineer in writing, duct cable shall be 2 inch diameter. Handling of duct cable reels and installation of duct shall be as recommended by the manufacturer. Duct for duct cable is designed as a conduit system and shall be considered as such in NEC interpretations. Conductors shall not be spliced within a duct. Duct entering a ground box or foundation shall be coupled to a RMC elbow.

B. Duct cable shall have factory installed conductors. AWG size of electrical conductors shall be as called for in the plans or as required by the National Electrical Code. Conduit bid as High Density Polyethylene (HDPE) conduit shall meet the requirements of duct cable except that the conduit shall be supplied without factory installed conductors. HDPE conduit may be substituted for duct cable. After HDPE conduit is installed, conductors shall be installed. AWG size of electrical conductors shall be as called for in the plans.

C. Duct cable shall be extended through conduit casings in one continuous length without connection to the casing.

D. After duct cable has been installed, a pull test will be made on conductors. If conductors cannot be freely pulled, Contractor shall replace or otherwise adjust installation to free up the conductors. Duct cable ends shall be sealed with foam electrical conduit sealant or with heat-shrinking material after pull test is completed.

E. Sufficient clearance shall be left between each conduit ell so the bonding bushings may be correctly installed. Conduit cover is shown as 18 inches minimum, where run under a road, the minimum cover requirement is 24 inches.

F. All duct splices shall be by means of UL listed fittings, threaded duct with PVC threaded connector or UL listed tiewrap fitting or central Fusamatic electrically heated fusing conduit coupling installed in accordance with the manufacturer's instructions and approved by the Engineer. Glue on connectors, water pipefittings and heat shrink tubing splices will not be allowed.

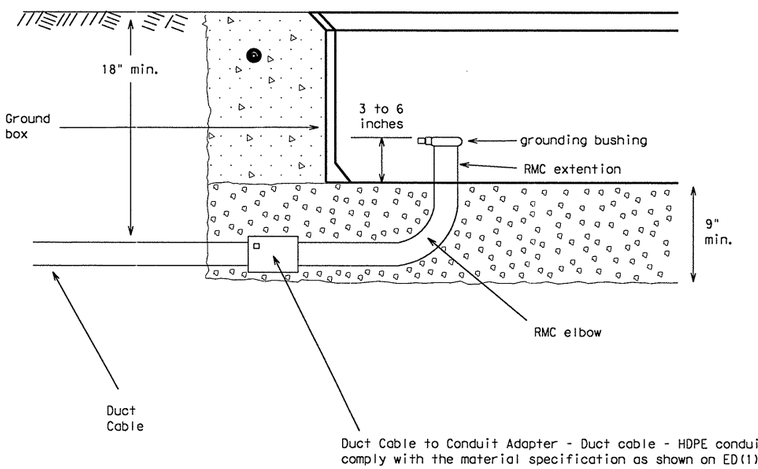

When the upper end of an RMC Ell does not enter the ground box, it may be extended with a Sch-40 PVC conduit nipple and bell end, provided there is 18" of cover over all parts of the elbow. If not, a rigid extension and ground bushing is required.

Gravel bed is to be a min. of 9 inches deep, placed under and not in the ground box. Gravel shall not encroach into the interior of the box.

DUCT CABLE AT GROUND BOX

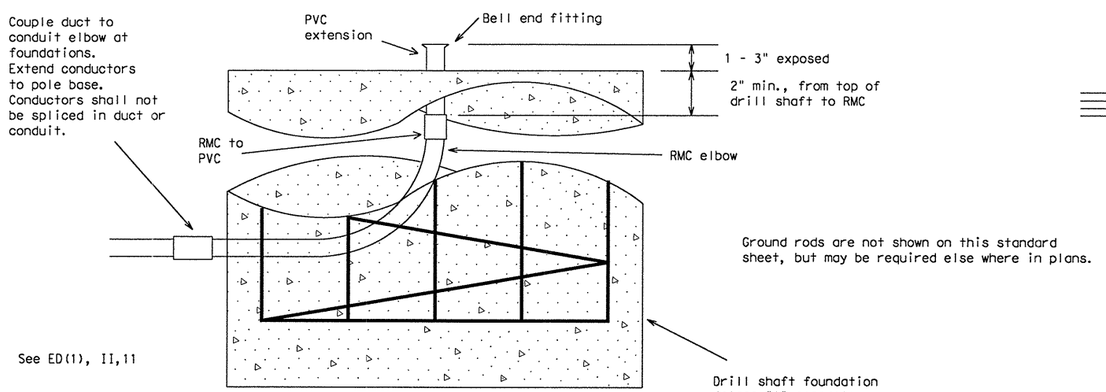

Ground rods are not shown on this standard sheet, but may be required else where in plans.

DUCT CABLE AT FOUNDATION

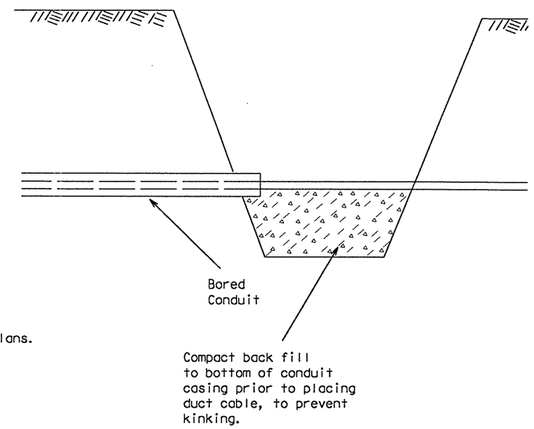

BORE PIT DETAIL

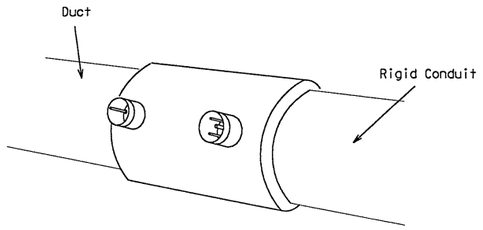

Central Fuseamatic

Electrically Heated Fusing Conduit Coupling

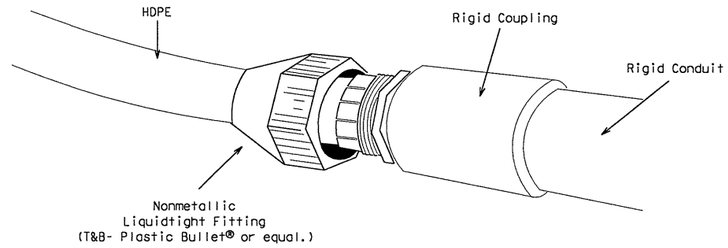

EXAMPLES OF PROPER CONNECTIONS

STANDARD PLANS
TEXAS DEPARTMENT OF TRANSPORTATION
Traffic Operations Division

ELECTRICAL DETAILS- DUCT CABLE

ED(10)-03

© TxDOT April 1998	DN: - KB	CK: - JW	DW: - DN	CK: - GC	NEG NO.:

REVISIONS	STATE DISTRICT	FEDERAL REGION	FEDERAL AID PROJECT	SHEET
12-00 3-03	AUS	6	CC 337-1-29	195

COUNTY	CONTROL	SECTION	JOB	HIGHWAY
WILLIAMSON	0337	01	029	SH 29

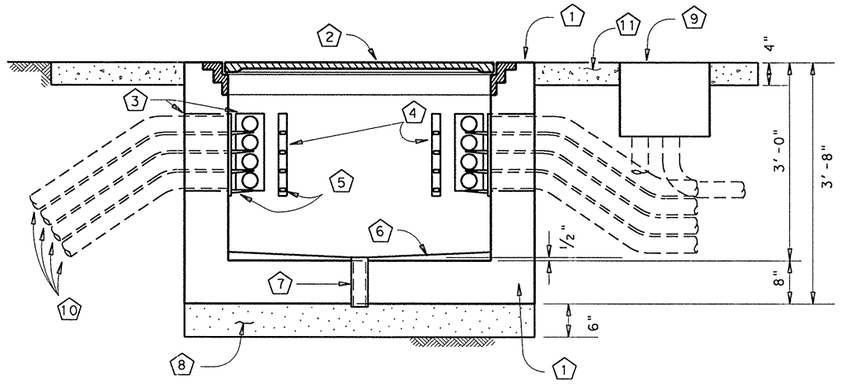

TYPICAL VERTICAL SECTION

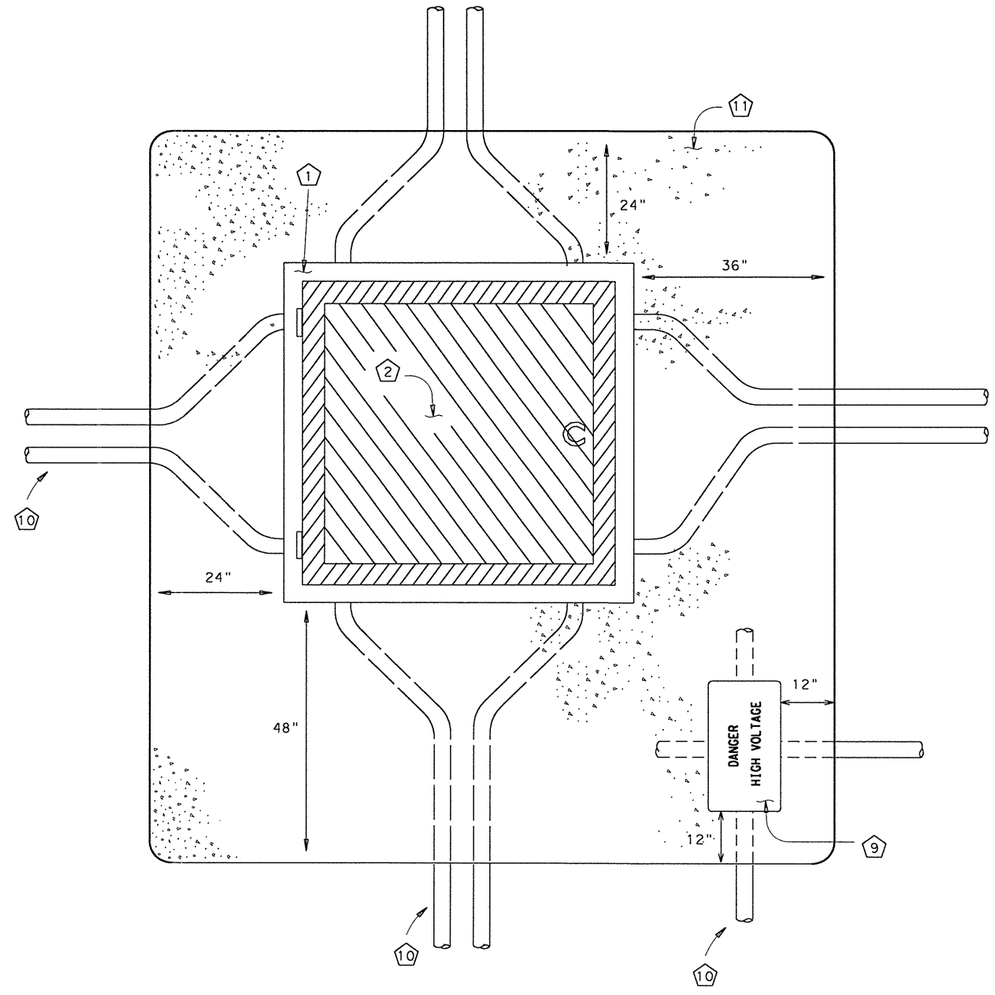

TYPICAL PLAN VIEW

1. Concrete ground box Type J - shall be 48" by 48" inside dimension and shall have AASHTO HS 20 wheel loading structural design. Fabricator shall submit shop drawings sealed by a Texas Licensed Structural Engineer. Shop drawings and calculations shall be for the box and lid as a unit.
2. Lid and ring shall be cast from Gray Iron in accordance with AASHTO M306, and shall be suitable for HS 20 loading or better. Proof-load testing certification in accordance with AASHTO M 306 shall be submitted. Lid shall have type T hinges and type G handles, and shall have a safety device to prevent accidental closing once the lid has been opened. Lid shall be cast with "TxDOT CONNUMICATIONS" in one inch lettering on top. Lid and ring shall be supplied together, and shall have no sharp edges. Shop drawings shall be submitted. (Neenah Foundry R-6662-TH, or equal.)
3. 18" by 9" knockout in concrete
4. Cable rack - Joslyn J5124, Chance C203-1124 or equivalent
5. Cable rach hooks - Joslyn J5131A, Chance C203-1131 or equivalent
6. Concrete drain invert, ½" pitch from center to walls
7. 3" drain
8. Filter material - Grade 3 aggregate or finer. See ITEM 302
9. RPM ground box, as called for in layouts, for electrical power conductors and traffic signal cables. See ED(3) for ground box details
10. Conduits (See layouts for number, details, specifications, and sizes)
11. Concrete riprap apron, Bid as ITEM 432. 1 cubic yard minimum

GENERAL NOTES

1) Illumination, traffic signal and other conductors carrying full voltages (50 volts or greater) shall not enter the communications ground box, but shall be run into an adjacent RPM ground box, as shown in the detail.
2) Conductors in the Type J ground box shall be laid on the racks and secured in place with plastic ties. At no time shall any conductor be run through the center of the box. Contractor shall arrange conduit runs so cables shall enter and exit the box without violating the required bend radius or running throught the center of the box.
3) Riprap shown is the minimum required. Riprap shall extend to protect all conduits with less than the minimum allowed ground cover.
4) Conduits shall not extend inside the box more than 1", including the required bell end fitting or bushing. Conduits shall be securely grounted in place with Portland cement completely filling the knockout window around the conduits.
5) Rigrap and boxes shall be cast flat with a maximum slope of 0.25% (3" over 10').
6) Payment - concrete ground box Type J shall be bid as ITEM 628. RPM ground box and riprap shall be bid separately.

Texas Department of Transportation
Traffic Operations Division

CONCRETE GROUND BOX (TYPE J) FOR TRAFFIC MANAGEMENT SYSTEMS

ED(11)-03

© TxDOT July 2000	DN: - JM	CK: -	DW: - DN	CK: - JM	REG NO.:

REVISIONS	STATE DISTRICT	FEDERAL REGION	FEDERAL AID PROJECT	SHEET
9-00	AUS	6	CC 337-1-29	196
12-00				
3-03				

COUNTY	CONTROL	SECTION	JOB	HIGHWAY
WILLIAMSON	0337	01	029	SH 29

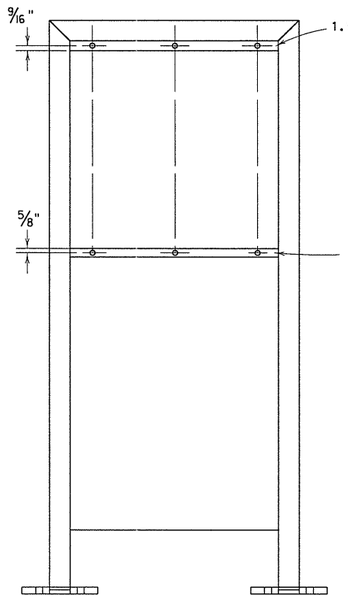

BACK ELEVATION VIEW

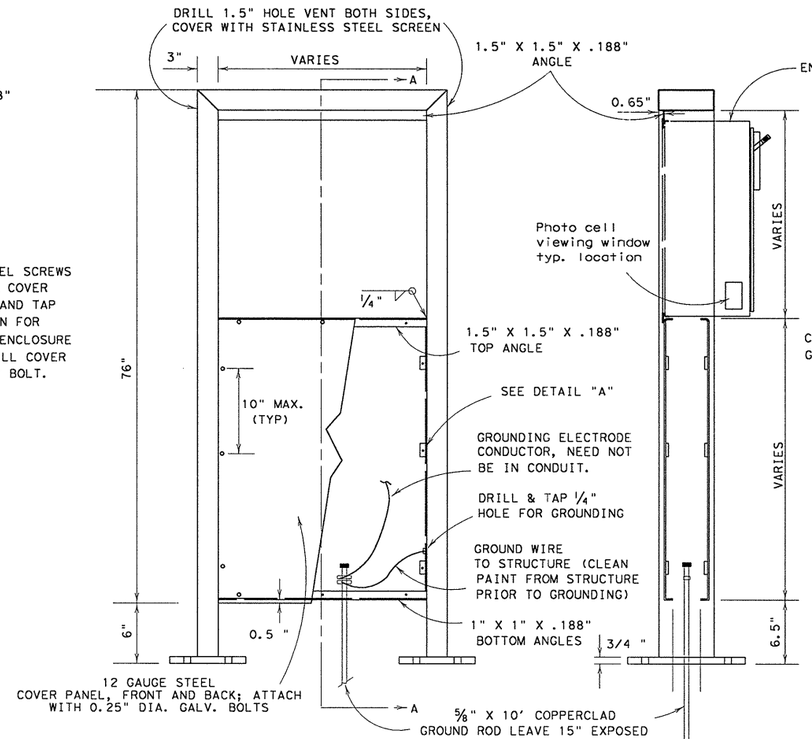

FRONT ELEVATION VIEW

SECTION A-A

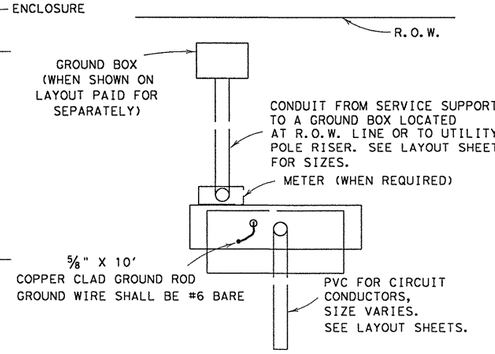

PLAN VIEW

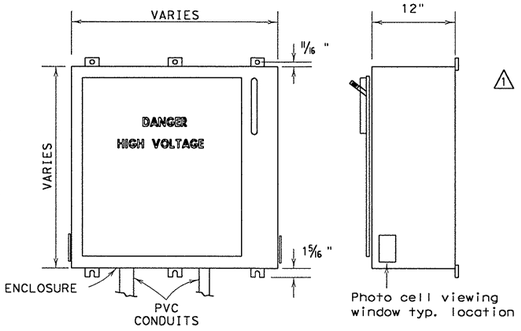

FRONT

RIGHT SIDE

ENCLOSURE

GENERAL NOTES:

1. Structure shall be designed in accordance with latest issue of AASHTO "STANDARD SPECIFICATIONS FOR STRUCTURAL SUPPORTS FOR HIGHWAY SIGNS, LUMINAIRES AND TRAFFIC SIGNALS." Structures shall be designed for 80 mph wind load with 1.3 gust factor. Shop drawings shall include ASTM material designations. Shop drawings shall be submitted for the electrical service support in accordance with Item 441, "STEEL STRUCTURES." Catalog cut sheets shall be submitted for the enclosure and equipment.
2. The structure shall be galvanized. Twelve gauge sheet covers and enclosure may be made from pre-galvanized sheeting. When shown elsewhere on the plans, structure and outside of enclosure may be painted in lieu of galvanizing.
3. Structure mounting dimensions may vary to match enclosure provided.
4. All conduit and conductors attached to the electrical service and within 12" of the electrical service will not be paid for directly, but shall be subsidiary to the electrical service. All conduit and conductors from the utility company pole to a point 12" from the electrical service, including conduit and conductors required for the utility pole riser, when furnished by the Contractor, will be paid for separately.
5. All conduits entering enclosures from underground to be sealed. Silicone will not be allowed.
6. All PVC conduits to be fitted with a bell end or bushing.
7. Support structure to be bonded to the ground rod using a #6 AWG Copper Bonding jumper to be terminated with a listed eyelet type connector connected to a 1/4-20 SS machine screw-bolt. Sheet metal screws will not be allowed for bonding. All threaded bonding connections shall be made up wrench tight. All non- conductive materials to be removed from contact surfaces.
8. Service enclosures to be labeled and steciled see ED(5) VIII C.
9. Ground rod clamp to be UL listed for direct burial.
10. Photo cell viewing window location on each side of the service enclosure to be clear of obstructure and provide a clear line of sight view and allow for the proper light level sensing by the photo cell.
11. Liquidtight flexible metal conduit may not be used on type RT(U) service supports.

STRUCTURE DATA	
TUBULAR POLE MEMBER SIZE	ANCHOR BOLTS DIA. X LENGTH X HOOK
8" X 3"X 3/16 "	5/8" X 16" X 4"

COMPONENT	ASTM
TUBING MEMBERS	A500 GRADE A
BASE PLATES	A36
ANCHOR BOLTS	A307 or A36

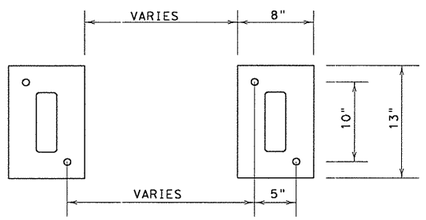

BASE PLAN VIEW

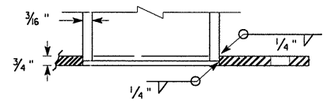

BOTTOM OF POLE

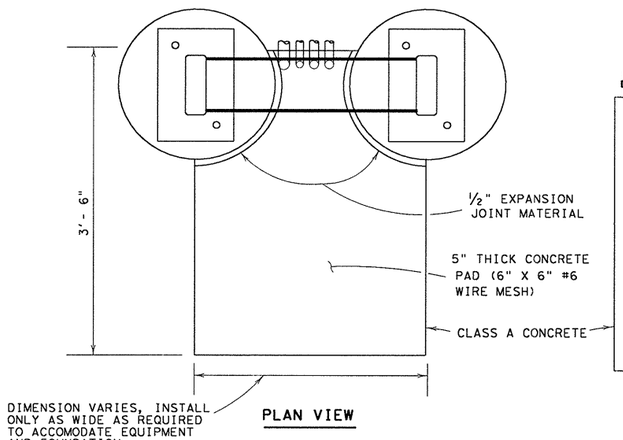

PLAN VIEW

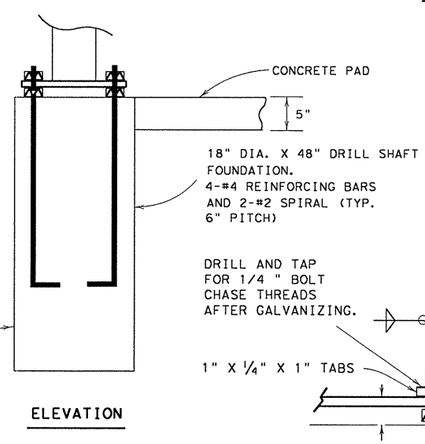

ELEVATION

FOUNDATION

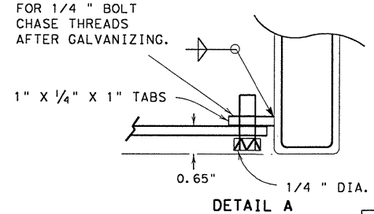

DETAIL A

5/03 Revision

⚠ Revised notes.

STANDARD PLANS
TEXAS DEPARTMENT OF TRANSPORTATION
Traffic Operations Division

ELECTRICAL DETAILS- ELECTRICAL SERVICE SUPPORT TYPE RT (U)

ED(12)-03

©TxDOT January 1992	DN: - KB	CK: - JW	DW: - DN	CK: - GC	REQ NO.:

REVISIONS	STATE DISTRICT	FEDERAL REGION	FEDERAL AID PROJECT	SHEET
4-98	AUS	6	CC 337-1-29	197
12-00				
3-03	COUNTY		CONTROL / SECTION / JOB	HIGHWAY
5-03	WILLIAMSON		0337 / 01 / 029	SH 29

GROUND BOX - Type - Battery Box

A. MATERIALS

1. Battery box ground boxes shall be constructed such that it will be possible to install and accomodate up to 4 batteries measuring 8" x 13.5" x 10" (W x L x D).
2. All battery box ground boxes and covers shall be permanently marked either by impress or by permanent ink, with manufacturer's model number and manufacturer's name or logo.
3. Covers shall be bolted down, and bolt holes in the box shall be arranged to drain dirt.
4. Battery box ground boxes shall meet the following requirements:
   a. Battery box cover and cover ring will be manufactured from polymer concrete reinforced with continuous strands of woven or stitched borosilicate fiberglass cloth. The polymer concrete shall be made from catalyzed polyester resin, sand and aggregate, and shall have a minimum compressive strength of 11,000 psi. Polymer concrete containing chopped fiberglass or fiberglass reinforced plastic is not acceptable.
   b. Battery box ground box walls will be manufactured from fiberglass reinforced plastic reinforced with continuos strands of woven or stitched borosilicate fiberglass cloth. The fiberglass reinforced plastic shall be made from catalyzed polyester resin, lightweight filler and reinforced with woven roving and shall have a minimum compressive strength of 7,500 psi.
   c. Minimum inside dimensions shall be at least as follows (width x length x depth): Battery box shall be at least 15 1/4 inches x 28 1/4 inches x 14 1/2 inches.
   d. Bottom edge of box or extension shall be footed with a minimum 1 1/2 inch flange.
   e. Battery ground boxes shall withstand 600 lbs. per sq. ft. applied over the entire sidewall with less than 1/4 inch deflection per foot length of box. Ground boxes and covers shall withstand a test loading of 20,000 lbs. over a 10 inch by 20 inch area centered on the cover with less than 1/2 inch deflection. Battery ground boxes and covers shall meet Western Underground Standards 3.6. Manufacturer shall supply certification by an independent laboratory or sealed by a Texas-Licensed Professional Engineer.
   f. Covers shall be 2 inch thick polymer concrete. All hardware shall be stainless steel. Cover shall be secured with two 1/2 inch stainless steel bolts. Bolts shall be self-retaining and shall withstand a minimum of 70 ft-lbs. torque and shall have a minimum 750 lbs. straight pull out strength. Nuts shall be floating and shall provide a minimum of 1/2 inch movement from the center of the nut. Covers shall be skid resistant, minimum 0.5 coefficient of friction. Covers shall be interchangeable between manufacturers and shall conform to the dimensions shown herein. Unless otherwise approved by the Engineer, cover shall be legibly labeled, "Traffic Signals Danger High Voltage" in minimum 1 inch letters.
   g. The battery box shall be supplied with predrilled holes to accept 3/8 inch stainless steel rods. The holes shall be installed 1 1/2 inches (+/- 1/4 inches) above the bottom edge of the box along the length of the box at 3 1/2 inch centers beginning 4 1/2 inches from the edge of the box.
   h. A minimum of seven 3/8 inch stainless steel rods threaded on both ends shall come equipped to be inserted in the predrilled holes to serve as a rack sufficient to accommodate up to four batteries. The rods shall be secured in place utilizing 3/8" stainless steel (s.s.) nuts and 3/8" X 1" s.s. flat washers.
   i. Ground boxes of the type specified above shall meet the requirements shown above. The Contractor will be permitted to furnish like materials of any manufacturer provided they are of equal quality and comply with the specifications.
   j. Two 3/8" plastic sheets measuring a nominal 6" x 24" shall be supplied which are to be placed on the secured rods upon which the batteries (supplied by others) are to be set.
   k. A minimum of four battery "bell jars" and respective tie down straps are to be supplied. These bell jars are inverted over the batteries and strapped to the batteries.

B. CONSTRUCTION METHODS

1. Battery box ground boxes shall be set on a 9 inch (minimum) bed of coarse No. 1 aggregate as defined by Item 421. Gravel shall be in place prior to setting box and conduits shall be capped. Any gravel or dirt in conduit shall be removed.
2. Construction of an apron encasing the battery box ground box including concrete and reinforcing steel is required and shall not be paid for directly but shall be subsidiary to the ground box. Reinforcing steel may be field bent. Concrete for aprons shall be considered miscellaneous concrete for testing purposes. Aprons shall be cast in place.
3. Any holes cut into the sidewall of battery box ground boxes shall be accomplished using a round hole saw or other method approved by the Engineer.

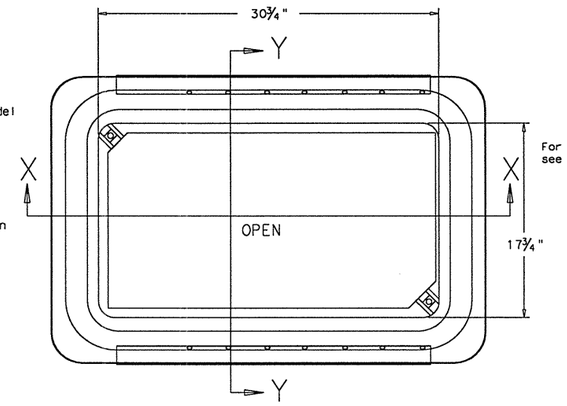

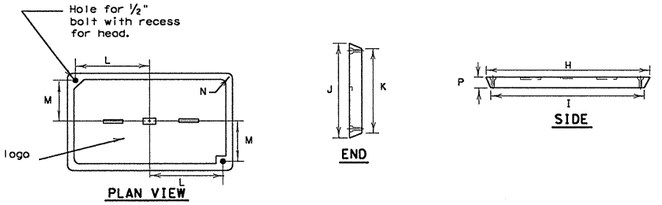

GROUND BOX COVER

GROUND BOX COVER DIMENSIONS								
BOX	DIMENSIONS (INCHES)							
SIZE	H	I	J	K	L	M	N	P
Battery box	30 1/2	30 1/4	17 1/2	17 1/4	13 1/4	6 3/4	1 3/8	2

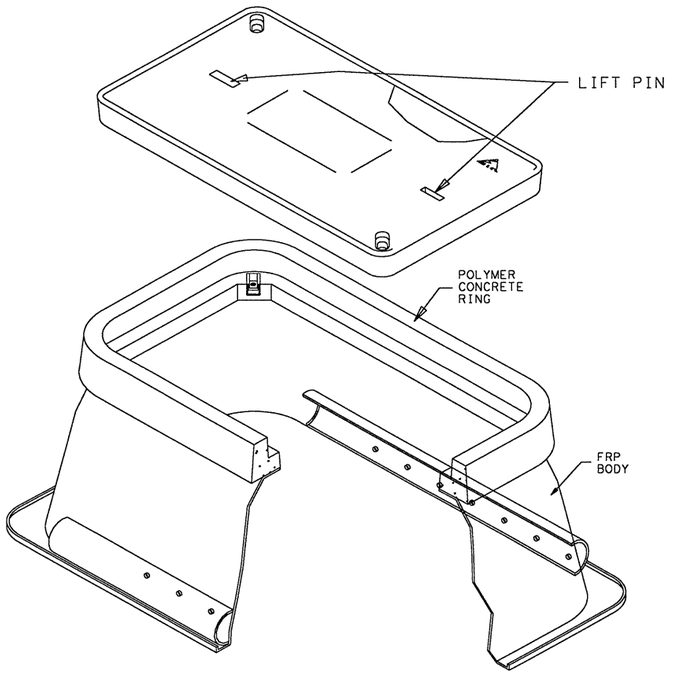

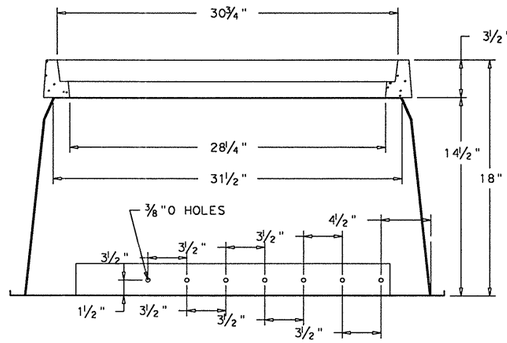

SECTION X-X

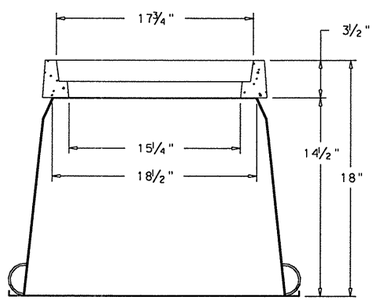

SECTION Y-Y

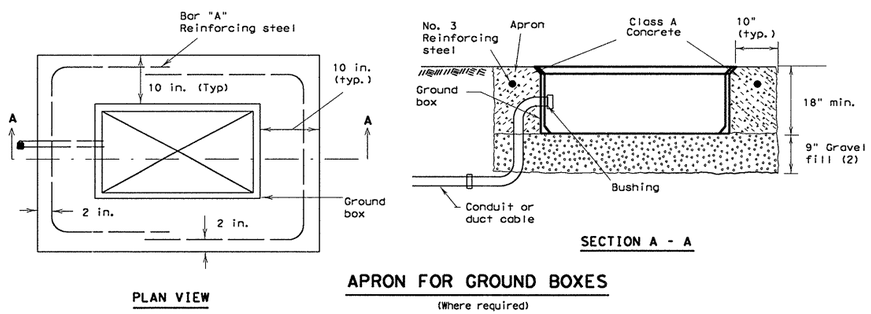

APRON FOR GROUND BOXES

(Where required)

(1) Place gravel "under" the box. not "in" the box. Gravel should not encroach on the interior volume of the box.
(2) Install bushing on the upper end of all ells.
(3) All conduits shall be installed in a neat and workmanlike manner.

STANDARD PLANS
Texas Department of Transportation
Traffic Operations Division

ELECTRICAL DETAILS GROUND BOXES/ BATTERY BOX

ED(13)-03

© TxDOT May 2003			DN: - HW	CK: - BV	DW: - HW	CK: - CAL
REVISIONS	STATE DISTRICT	FEDERAL REGION	FEDERAL AID PROJECT			SHEET
	AUS	6	CC 337-1-29			198
	COUNTY		CONTROL	SECTION	JOB	HIGHWAY
	WILLIAMSON		0337	01	029	SH 29

...\signals\ed5-03.dgn 09/21/2004 09:43:54 AM

ARM SIZE D_1	ARM SIZE ℄	A	B	C	D	E	CONN BOLT DIA
in.	in.	in.	in.	in.	in.	in.	in.
6.5	.179	12	9	9	6	1	1
7.5	.179	13	9	10	6	1	1
8.0	.179	14	10	11	7	1 ¼	1 ¼
9.0	.179	16	11	13	8	1 ¼	1 ¼
9.5	.179	17	12	14	9	1 ¼	1 ¼
9.5	.239	18	12	15	9	1 ¼	1 ¼
10.0	.239	18	12	15	9	1 ¼	1 ¼
10.5	.239	18	13	15	10	1 ½	1 ½
11.0	.239	18	13	15	10	1 ½	1 ½

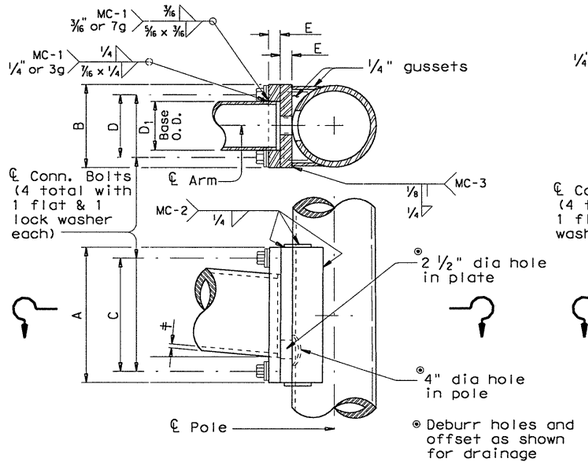

FIXED MOUNT DETAIL 1

ARM SIZE D_1	ARM SIZE ℄	A	F	CONN. BOLTS No.	CONN. BOLTS Dia	PIN BOLTS No.	PIN BOLTS Dia
in.	in.	in.	in.	ea.	in.	ea.	in.
6.5	.179	12	8	4	* 7/8	2	5/8
7.5	.179	14	8	4	1	2	5/8
8.0	.179	14	8	4	1	2	5/8
9.0	.179	16	10	4	1	2	5/8
9.5	.179	18	12	4	1 ¼	3	5/8
9.5	.239	18	12	4	1 ¼	3	5/8
10.0	.239	18	12	4	1 ¼	3	5/8

*1" Dia connection bolts are permissible

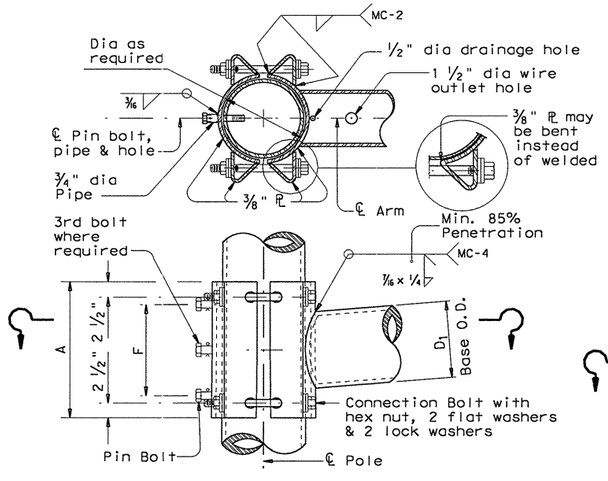

CLAMP-ON DETAIL 1

ARM SIZE D_1	ARM SIZE ℄	A	F	T	CONN. BOLTS No.	CONN. BOLTS Dia	PIN BOLTS No.	PIN BOLTS Dia
in.	in.	in.	in.	in.	ea.	in.	ea.	in.
7.0	.179	12	8	¾	4	¾	2	5/8
7.5	.179	14	8	¾	4	¾	2	5/8
8.0	.179	14	8	¾	4	¾	2	5/8
9.0	.179	16	10	⅞	4	1	2	5/8
10.0	.179	18	10	⅞	4	1	2	5/8
9.5	.239	18	10	1	6	1	3	5/8
10.0	.239	18	10	1	6	1	3	5/8

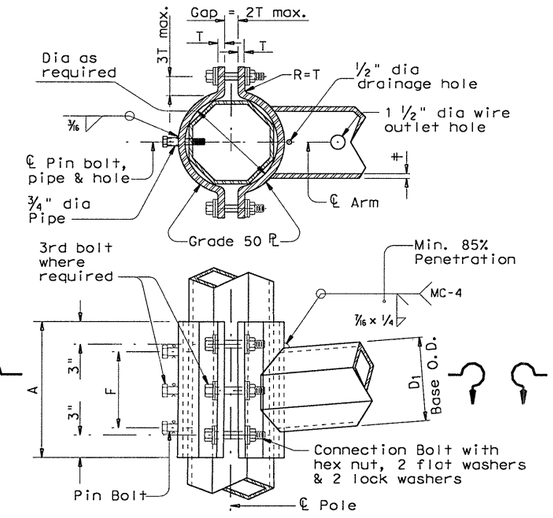

CLAMP-ON DETAIL 2

ARM SIZE D_1	ARM SIZE ℄	A	F	CONN. BOLTS No.	CONN. BOLTS Dia	PIN BOLTS No.	PIN BOLTS Dia
in.	in.	in.	in.	ea.	in.	ea.	in.
6.5	.179	12	8	4	1	2	5/8
7.5	.179	14	8	4	1	2	5/8
8.0	.179	14	8	4	1	2	5/8
9.0	.179	16	10	4	1	2	5/8
9.5	.179	18	12	6	1	3	5/8
9.5	.239	18	12	6	1	3	5/8
10.0	.239	18	12	6	1	3	5/8

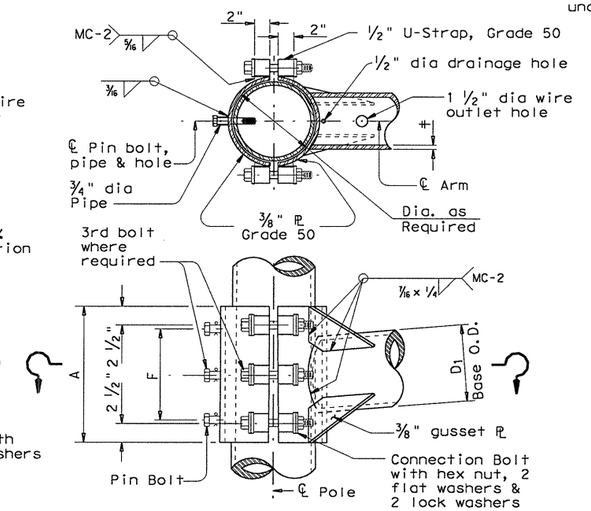

CLAMP-ON DETAIL 3

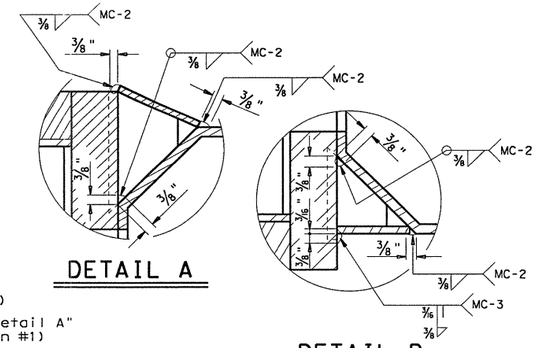

DETAIL A

DETAIL B

MATERIALS	
Round Shafts or Polygonal Shafts	ASTM A595 GR A, ASTM A570 GR 50, ASTM A607 GR 50, ASTM A572 GR 50 or A36M50
Plates (1)	ASTM A36 OR A572 GR 50 or A595(2) or A36M50
Connection Bolts	ASTM A325 except where noted
Pin Bolts	ASTM A325
Pipe	ASTM A53 GR A or B, or A501
Misc. Hardware	Galvanized steel or stainless steel or as noted

(1) Any of the materials listed for plates may be used where the drawings do not specify a particular Grade designation.

(2) If A595 material is used, it need not be cold worked to A595 requirments, but material must have 40 ksi minimum yield prior to fabrication.

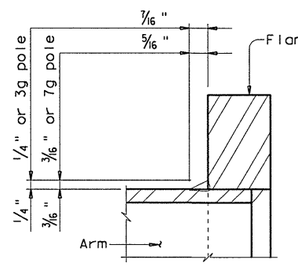

FIXED MOUNT ARM

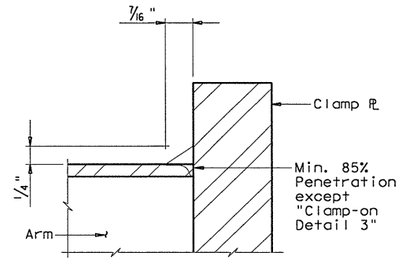

CLAMP-ON ARM

ARM BASE WELD DETAILS

GENERAL NOTES:

Clamp-on details are used for the second arm on dual mast arm assemblies. A Maximum 1 ½" wide vertical slotted hole may be cut in the front clamp plate to facilitate drainage during galvanizing. The slot shall be centered behind the arm and shall be no longer than the arm diameter minus 1"

Fixed mount details are used for single mast arm assemblies and for the first arm on dual mast arm assemblies.

Where duplicate parts occur on a detail, welds shown for one part shall apply to all similar parts on the detail.

Pin bolts are required to prevent rotation of clamp-on arms under design wind forces.

NOTE:

Pin bolts shall be A325 with threads excluded from the shear plane. Pin bolt and ¾" dia pipe shall have 3/16" dia holes for a ⅛" dia galvanized cotter pin. Back clamp plate shall be furnished with a ¾" dia hole for each pin bolt. An 11/16" dia hole for each pin bolt shall be field drilled through the pole after arm orientations have been approved by the Engineer.

Texas Department of Transportation
Traffic Operations Division

STANDARD ASSEMBLY FOR TRAFFIC SIGNAL SUPPORT STRUCTURES

MAST ARM CONNECTIONS

MA-C-96

FILE: MA-C.DGN	DN: MS	CK: JSY	DW: MMF	CK: JSY
©TxDOT August 1995	DIST	FED REG	FEDERAL AID PROJECT #	SHEET
REVISIONS	AUS	6	CC 337-1-29	19
5-96	COUNTY		CONTROL	SECT	JOB	HIGHWAY
	WILLIAMSON		0337	01	029	SH 29

...\signals\mac.dgn 09/21/2004 09:43:56 AM

TABLE OF DIMENSIONS
for ILSN Support Arm Clamp-on
Details 1, 2 and 3

ILSN ARM SIZE	A	F	CONN. BOLTS		PIN BOLTS	
			No.	Dia	No.	Dia
	in.	in.	ea.	in.	ea.	in.
3 in. dia Schedule 40 Pipe	10	8	4	3/4	2	5/8

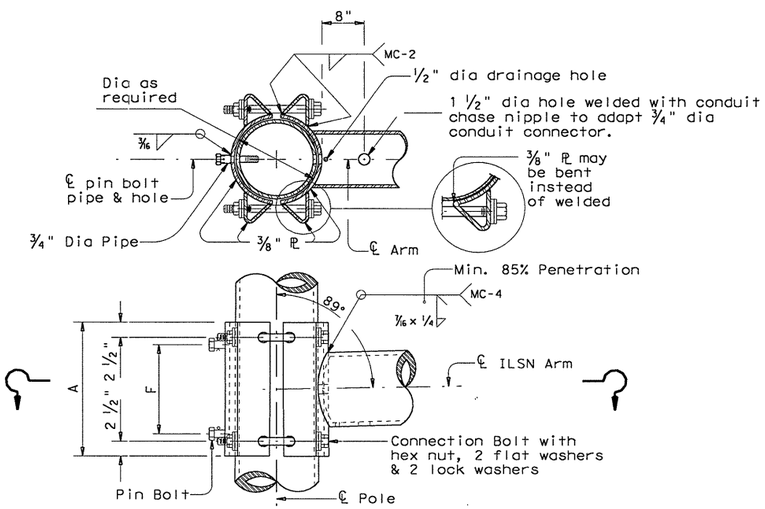

ILSN CLAMP-ON DETAIL 1

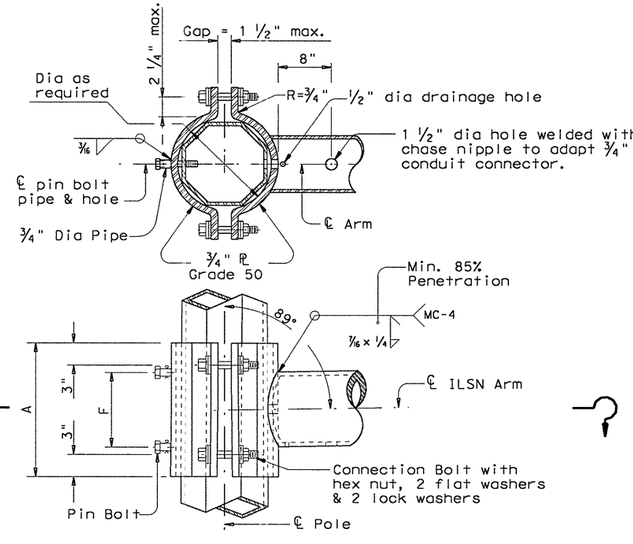

ILSN CLAMP-ON DETAIL 2

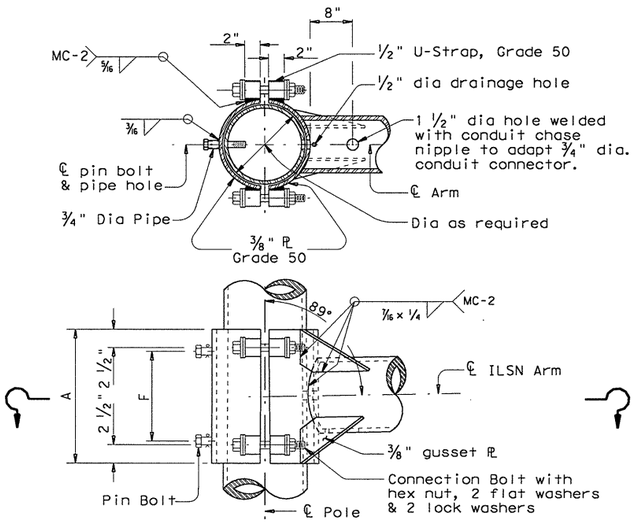

ILSN CLAMP-ON DETAIL 3

GENERAL NOTES:

Clamp-on details shall be used for ILSN support arm assemblies. A 1 1/2" inch diameter hole shall be cut in the front clamp plate for wiring access. A matched hole shall be field drilled through the pole to provide wire access after arm is oriented. Deburr both holes.

Where duplicate parts occur on a detail, welds shown for one part shall apply to all similar parts on the details.

Pin bolts are required to prevent rotation of clamp-on arms under design wind forces.

NOTE:

Pin bolts shall be A325 with threads excluded from the shear plane. Pin bolt and 3/4" dia pipe shall have 3/16" dia holes for a 1/8" dia galvanized cotter pin. Back clamp plate shall be furnished with a 3/4" dia hole for each pin bolt. An 11/16" dia hole for each pin bolt shall be field drilled through the pole after arm orientations have been approved by the Engineer.

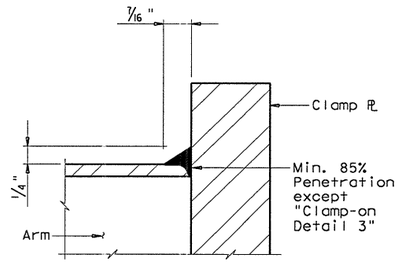

CLAMP-ON ARM

ARM BASE WELD DETAILS

Texas Department of Transportation
Traffic Operations Division

STANDARD ASSEMBLY FOR TRAFFIC SIGNAL SUPPORT STRUCTURES

MAST-ARM CONNECTIONS

MA-C(ILSN)-96

FILE: MA-CILSN.DGN	DN: MS	CK: JSY	DW: MMF	CK: JSY
©TxDOT August 1995	DIST	FED REC	FEDERAL AID PROJECT #	SHEET
REVISIONS	AUS	6	CC 337-1-29	20
5-96	COUNTY		CONTROL	SECT	JOB	HIGHWAY
	WILLIAMSON		0337	01	029	SH 29

...\signals\macilsn.dgn 09/21/2004 09:43:57 AM

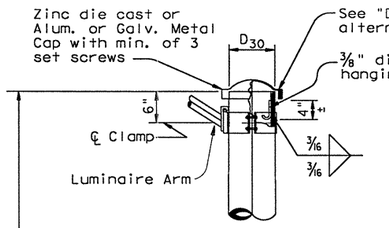

DETAIL A

(for pole with luminaire)

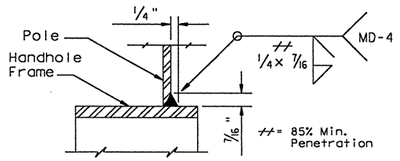

DETAIL E

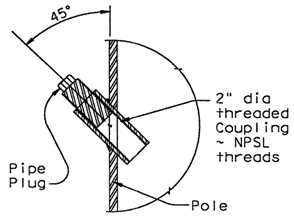

COUPLING DETAIL

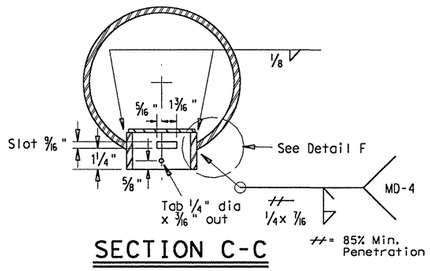

SECTION C-C

Opening for access compartment shall be no more than 1/16 inch wider than the access compartment itself.

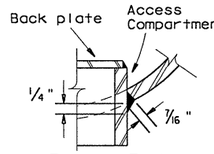

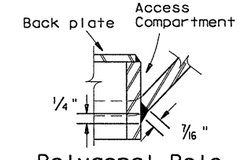

DETAIL F

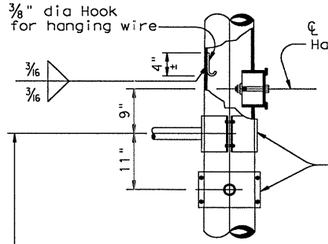

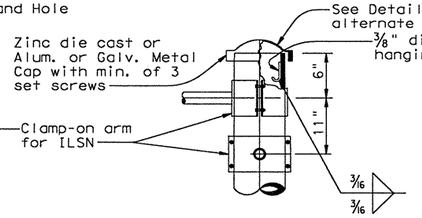

DETAIL J

(If ILSN applied)

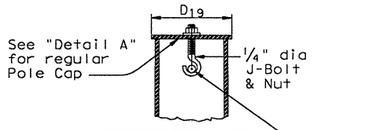

SECTION E-E

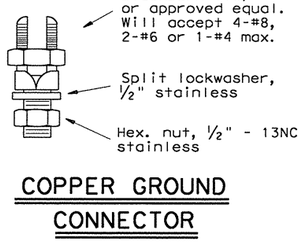

COPPER GROUND CONNECTOR

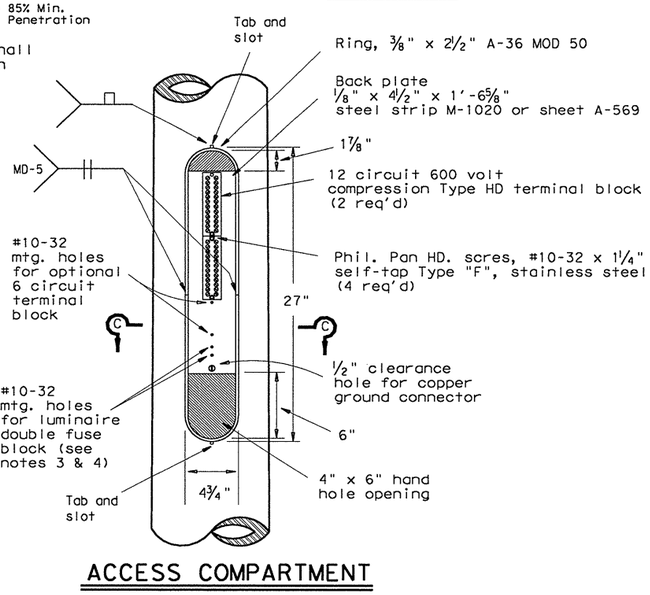

ACCESS COMPARTMENT

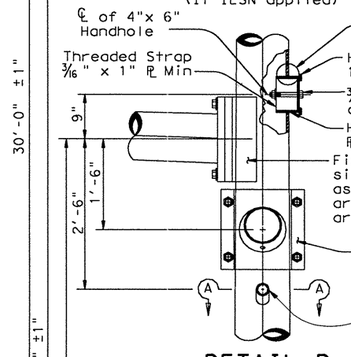

DETAIL B

(for 30' pole with luminaire and ILSN sign)

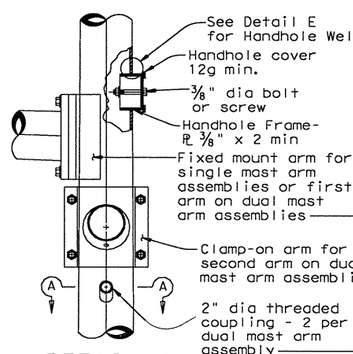

DETAIL K

(for 24' pole with ILSN sign and no luminaire)

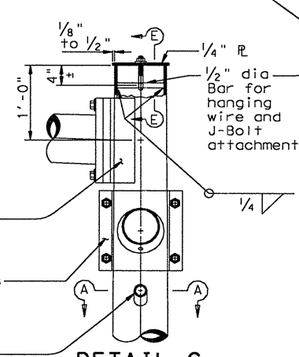

DETAIL C

(for 19' pole with no ILSN sign and no luminaire)

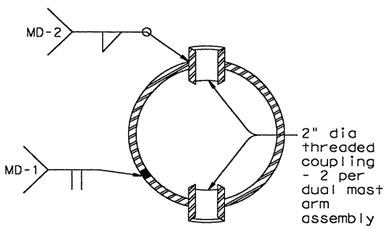

SECTION A-A

Anchor Bolt Diameter	Bolt Hole Diameter	Slot Length	Bolt Circle Diameter	Base ℞ Dim. L x T	Adjust. Range
1 1/2"	1 3/4"	3 1/2"	17"	18" x 1 1/2"	13.4°
1 3/4"	2"	4"	19"	20" x 1 3/4"	13.5°
2"	2 1/4"	4 1/2"	21"	22" x 2"	13.6°
2 1/4"	2 1/2"	5"	23"	24" x 2 1/4"	13.7°

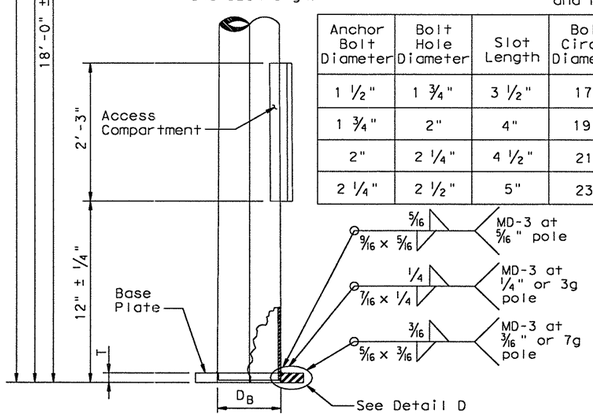

POLE ELEVATION

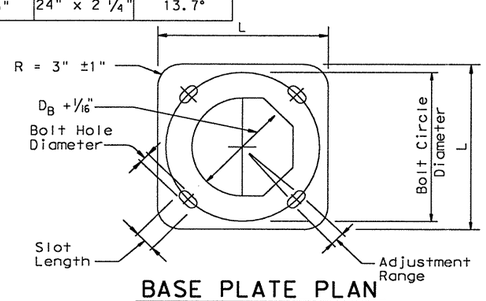

BASE PLATE PLAN

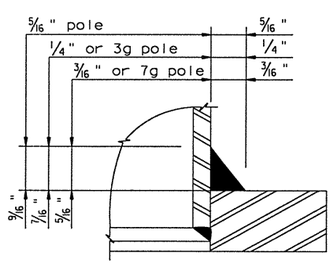

DETAIL D

1. The cover shall be one piece formed from ABS plastic, shall be a pearl gray color, and shall be suitable for exposure to harsh sunlight and extreme weather. Cover shall latch with two screw latches and shall fit tightly to the enclosure ring to create a rainproof seal. Latch screws shall be 1/4-20 stainless flat socket head screws with tamper proof feature.
2. The pole manufacturer shall provide with each pole a separate kit consisting of: one cover with two latching assemblies, two terminal strips (Marathon #985GP12CU or approved equal), four #10-32 x 1 1/4" self tapping type "F" stainless steel pan head screws, and one ground connector (Blackburn TTC, Burndy KC22J12T13, or Ilsco SSS-5). The traffic signal contractor shall install the kit items in the field.
3. The screw hole spacing on the enclosure back plate shall be for two Marathon #985GP12 terminal strips, one Marathon #985GP06CU terminal strip, and one Bussmann #BM6032B fuse block.
4. Install one Bussmann #BM6032B, Littelfuse #L60030M-2C, or Ferraz-Shawmut #30352 fuse block for poles where luminaires are to be installed.

10/03 Revision

1 Revised notes, and remove detail.

STANDARD PLANS
Texas Department of Transportation
Traffic Operations Division

TRAFFIC SIGNAL SUPPORT STRUCTURES MAST ARM POLE DETAILS

MA-D-03

©TxDOT August 1995	DN: MS	CK: JSY	DW: FDN	CK: CAL

REVISIONS	STATE DISTRICT	FEDERAL REGION	FEDERAL AID PROJECT	SHEET
7-96	AUS	6	CC 337-1-29	20\
8-99	COUNTY		CONTROL / SECTION / JOB	HIGHWAY
10-00	WILLIAMSON		0337 / 01 / 029	SH 29
10-03				

...\signals\mad.dgn 09/21/2004 09:43:57 AM

STRAIN POLE DESCRIPTION	Pole Type	Found-ation Type	Maximum Permissible Span Wire Load (lbs.)
26' Pole	A	36-A	5200
30' Pole	B	36-A	4600
30' Pole with Lum.	B	36-A	4400
30' Pole with 20' Mast Arm	C	36-B	5600
30' Pole with 24' Mast Arm	C	36-B	5500
30' Pole with 28' Mast Arm	C	36-B	5300
30' Pole with 32' Mast Arm	C	36-B	5100
30' Pole with 36' Mast Arm	C	36-B	4900
30' Pole with 20' Mast Arm & Lum.	C	36-B	5300
30' Pole with 24' Mast Arm & Lum.	C	36-B	5200
30' Pole with 28' Mast Arm & Lum.	C	36-B	5000
30' Pole with 32' Mast Arm & Lum.	C	36-B	4800
30' Pole with 36' Mast Arm & Lum.	C	36-B	4500
34' Pole	D	36-B	5600
34' Pole with Lum.	D	36-B	5400

② Numbers on charts indicate the number of signal heads on the span. The total span wire design load is based on one 5-section head and one or more additional 3-section head(s). Design wind pressures on cables are assumed as 1.0 lb/ft. Weight of span wire cables (one per signal head) is assumed as 0.65 lb/ft which includes an allowance for conductor cables and miscellaneous hardware. The effect of the sway cable on load distribution is ignored as it is assumed to break at design wind conditions. When a pole supports 2 spans, the span wire design loads for both spans should be added vectorially to determine the design load for that pole.

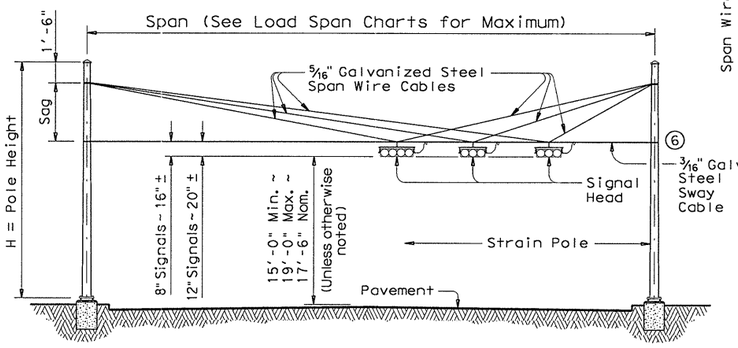

STRAIN POLE ELEVATIONS HORIZONTAL SIGNALS

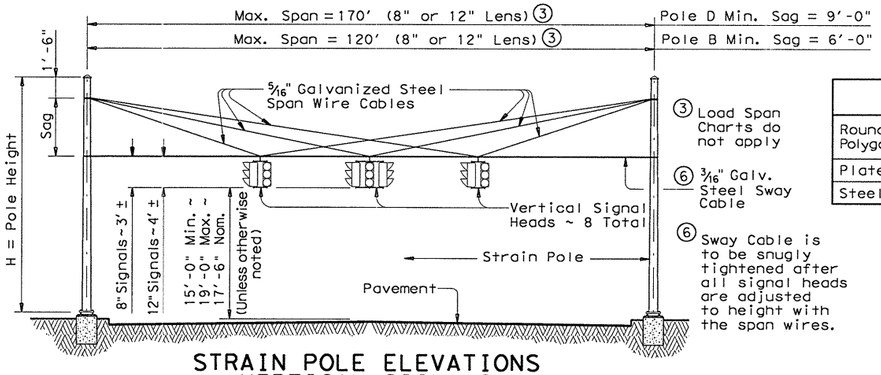

STRAIN POLE ELEVATIONS VERTICAL SIGNALS

(Mast arms are not used with vertical signals)

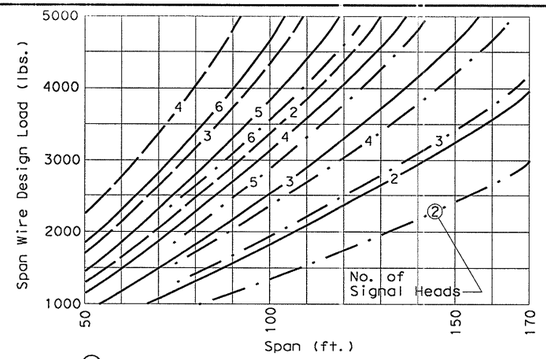

② SIGNALS WITH 12-INCH LENS

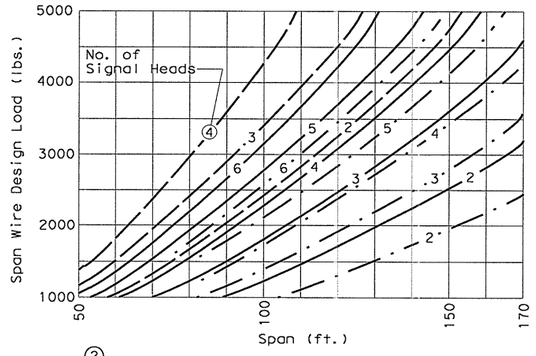

② SIGNALS WITH 8-INCH LENS

Signal Head Type	Wt. Per Head	Wind Area ◆
5-Section, 12" Lens	125 lbs	9.6 sq. ft.
5-Section, 8" Lens	70 lbs	4.8 sq. ft.
3-Section, 12" Lens	75 lbs	5.64 sq. ft.
3-Section, 8" Lens	45 lbs	3.0 sq. ft.

◆ Effective projected design wind area (actual area times drag coefficient)

——— ——— Sag = 4'-6" (26' or 30' Pole)
——————— Sag = 8'-0" (30' or 34' Pole)
· —— · —— Sag = 11'-6" (34' Pole)

SHIPPING PARTS LIST

Poles (Without Traffic Signal Arm)

Pole Type	Strain poles with Luminaire: Ship each pole with the following hardware attached: handhole at base, pole cap, 2 clamp-on simplex and 1 pipe plug.			Strain poles without Luminaire: Ship each pole with the following hardware attached: handhole at base, pole cap and 1 pipe plug.		
	Description	Designation	Quantity	Description	Designation	Quantity
A				26' Strain Pole	SP 26 A-80	
B	30' Strain Pole	SPL 30 B-80		30' Strain Pole	SP 30 B-80	
D	34' Strain Pole	SPL 34 D-80		34' Strain Pole	SP 34 D-80	

Poles (With Traffic Signal Arm)

Pole Type	Strain poles with Luminaire: Ship each pole with the following hardware attached: handhole at base, pole cap, clamp-on simplex and 3 pipe plugs.			Strain poles without Luminaire: Ship each pole with the following hardware attached: handhole at base, pole cap and 3 pipe plugs.		
	Description	Designation	Quantity	Description	Designation	Quantity
C	30' SPw/TS Arm	SPL 30 C-80		30' SPw/TS Arm	SP 30 C-80	

Traffic Signal Arms (For Type C poles)

Nominal Arm Length	Type I Arm (1 Signal): Ship each Type I Arm with the following hardware attached: 2 CGB Connectors, 1 clamp with bolts and washers		Type II Arm (2 Signals): Ship each Type II Arm with the following hardware attached: 1 Bracket Assembly ①, 3 CGB Connectors and 1 clamp with bolts and washers		Type III Arm (3 Signals): Ship each Type III Arm with the following hardware attached: 2 Bracket Assemblies ①, 4 CGB Connectors and 1 clamp with bolts and washers	
ft.	Designation	Quantity	Designation	Quantity	Designation	Quantity
20	20I-80					
24	24I-80		24 II -80			
28	28I-80		28 II -80			
32			32 II -80		32 III -80	
36			36 II -80		36 III -80	

Anchor Bolt Assemblies (1 per pole)

Anchor Bolt Diameter	Anchor Bolt Length	Templates may be removed for shipment. Quantity
1 ¾"	3'-10"	
2"	4'-3"	

Each Anchor Bolt Assembly consists of the following: Top and Bottom templates, 4 anchor bolts, 8 nuts, 8 flat washers, 4 lock washers and 4 nut anchor devices (Type 2) per Standard Drawing "TS-FD".

Luminaire Arms

Nominal Arm Length	Quantity
8' Arm	

① Supply Option "A" unless otherwise noted. See Sheet "DMA-80"

MATERIALS	
Round Shafts or Polygonal Shafts	ASTM A595 GR A, ASTM A570 GR50, ASTM A607 GR50, ASTM A572 GR50 or A36M50
Plates ⑦	ASTM A36 OR A572 GR50 OR A595 GR A OR A36M50
Steel Cable	ASTM A475, 7 Wire, Utilities Grade

⑦ Any of the materials listed for plates may be used where the drawings do not specify a particular ASTM designation.

Pole Type	ROUND POLES				POLYGONAL POLES			
	D_B	D_T	⑤thk	H	D_B	D_T	⑤thk	H
	in.	in.	in.	ft.	in.	in.	in.	ft.
A	12.5	8.9	.239	26	13.0	9.0	.239	26
B	13.5	9.3	.239	30	14.0	9.0	.239	30
C	15.5	11.3	.239	30	16.0	11.0	.239	30
D	15.5	10.7	.239	34	16.0	11.0	.239	34

D_B = Pole Base O.D. D_T = Pole Top O.D. H = Pole Height

⑤ Thickness shown are minimum, thicker materials may be used.

SHEET 1 OF 2

Texas Department of Transportation
Traffic Operations Division

TRAFFIC SIGNAL SUPPORT STRUCTURES STRAIN POLE ASSEMBLIES

(80 MPH WIND ZONE)

SP-80(1)-96

FILE: SP80.DGN	DN: MS	CK: JSY	DW: BR	CK: JSY	NEG:	
©TxDOT March 1996	DIST	FED REG	FEDERAL AID PROJECT			SHEET
REVISIONS	AUS	6	CC 337-1-29			2a2
6-96	COUNTY		CONTROL	SECT	JOB	HIGHWAY
	WILLIAMSON		0337	01	029	SH 29

...\signals\sp-80.dgn 09/21/2004 09:44:00 AM

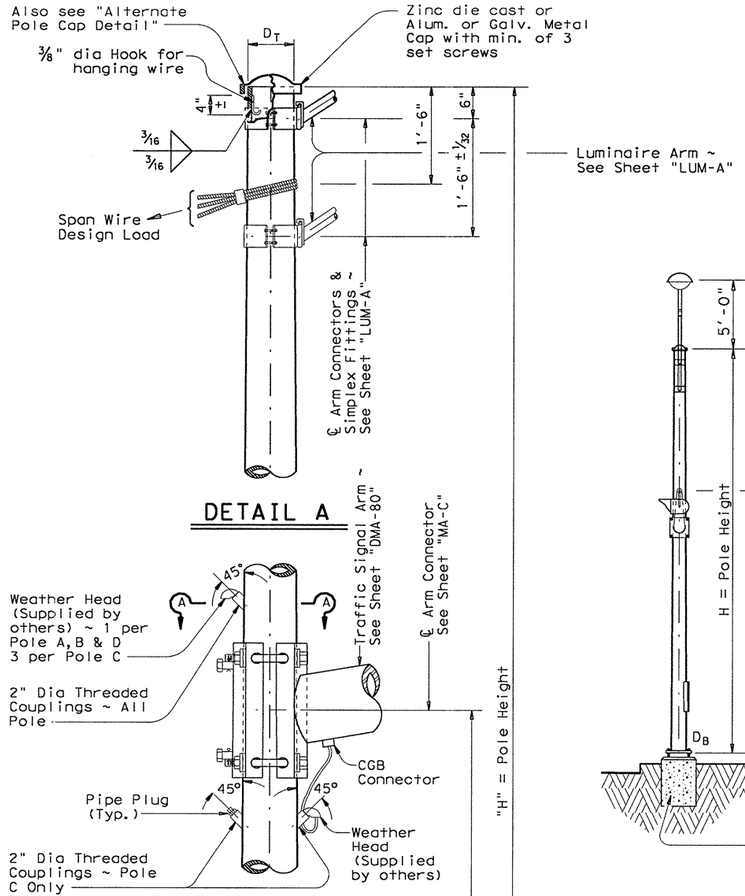

DETAIL A

DETAIL B

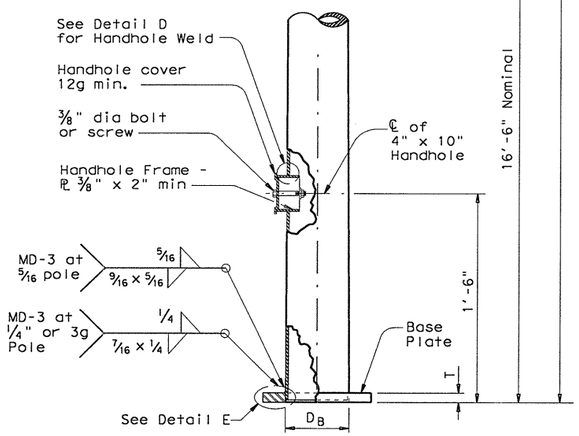

DETAIL C

POLE ELEVATION

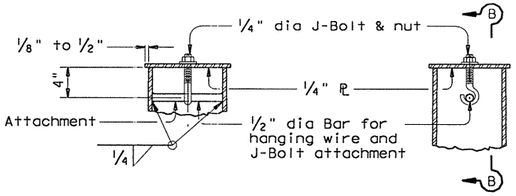

SECTION B-B

ALTERNATE POLE CAP DETAIL

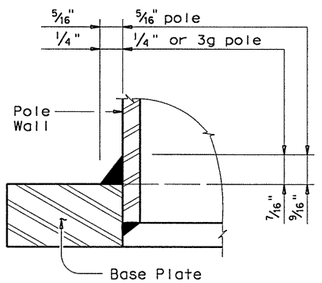

DETAIL E

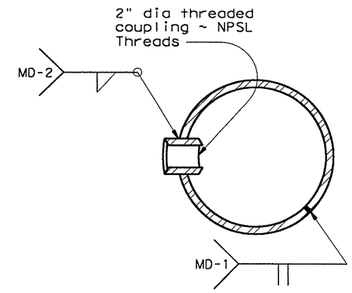

SECTION A-A

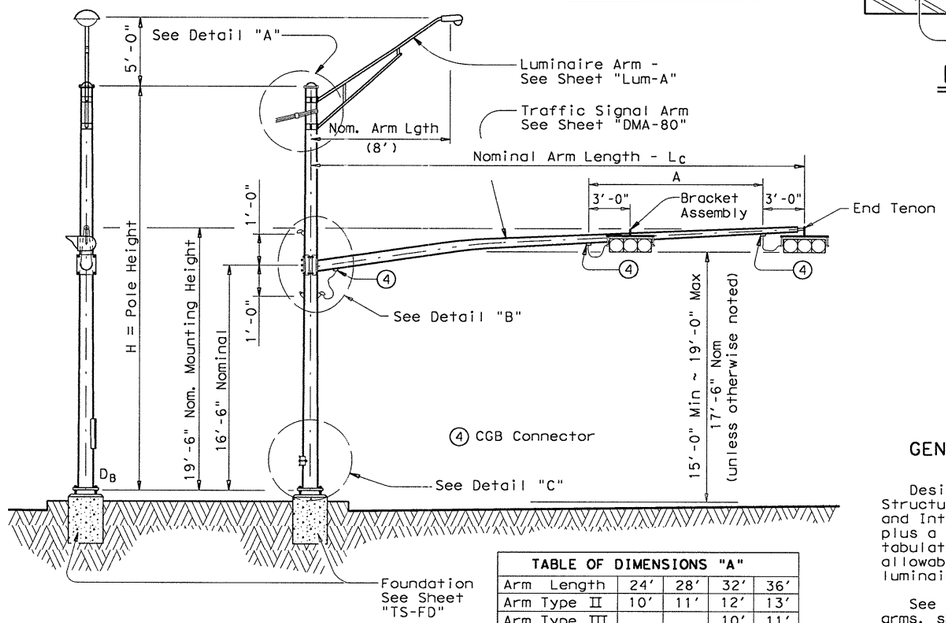

STRUCTURE ASSEMBLY

TABLE OF DIMENSIONS "A"				
Arm Length	24'	28'	32'	36'
Arm Type II	10'	11'	12'	13'
Arm Type III			10'	11'

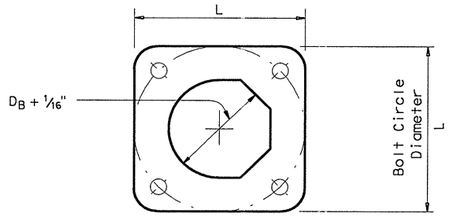

BASE PLATE PLAN

Foundation Type	Anchor Bolt Diameter	Bolt Hole Diameter	Bolt Circle Diameter	Base PL Dim. L x T
36-A	1 3/4"	2"	19"	19" x 1 3/4"
36-B	2"	2 1/4"	21"	21" x 2"



DETAIL D

GENERAL NOTES:

Design conforms to 1994 AASHTO Standard Specifications for Structural Supports for Highway Signs, Luminaires, and Traffic Signals and Interim Specifications thereto. Design Wind Speed equals 80 mph plus a 1.3 gust factor. The maximum permissible span wire design loads tabulated are calculated at a stress load of 1.4 times the basic allowable stress. A simultaneous wind on the pole, mast arm, and luminaire is also included.

See standard sheet "DMA-80" for details of clamp-on traffic signal arms, sheet "MA-C" for traffic signal arm connection details, sheet "LUM-A" for luminaire arm and connection details, and sheet "TS-FD" for anchor bolt and foundation details.

Fabrication shall be in accordance with the Specifications and with the details, dimensions, and weld procedures shown herein. Weld references call for preapproved weld procedures which the Fabricator must obtain prior to fabrication. Materials, fabrication tolerances, and shipping practices shall meet the requirements of this sheet and the Specifications.

Unless otherwise noted, all parts shall be galvanized in accordance with the Specifications.

Special design require submission of shop drawings in accordance with the item "Steel Structures".

Texas Department of Transportation
Traffic Operations Division

TRAFFIC SIGNAL SUPPORT STRUCTURES STRAIN POLE ASSEMBLIES

(80 MPH WIND ZONE)

SP-80(2)-96

FILE: SP80.DGN	DN: MS	CK: JSY	DW: BR	CK: JSY	NEG:	
©TxDOT March 1996	DIST	FED REG	FEDERAL AID PROJECT #			SHEET
REVISIONS 6-96	AUS	6	CC 337-1-29			203
	COUNTY		CONTROL	SECT	JOB	HIGHWAY
	WILLIAMSON		0337	01	029	SH 29

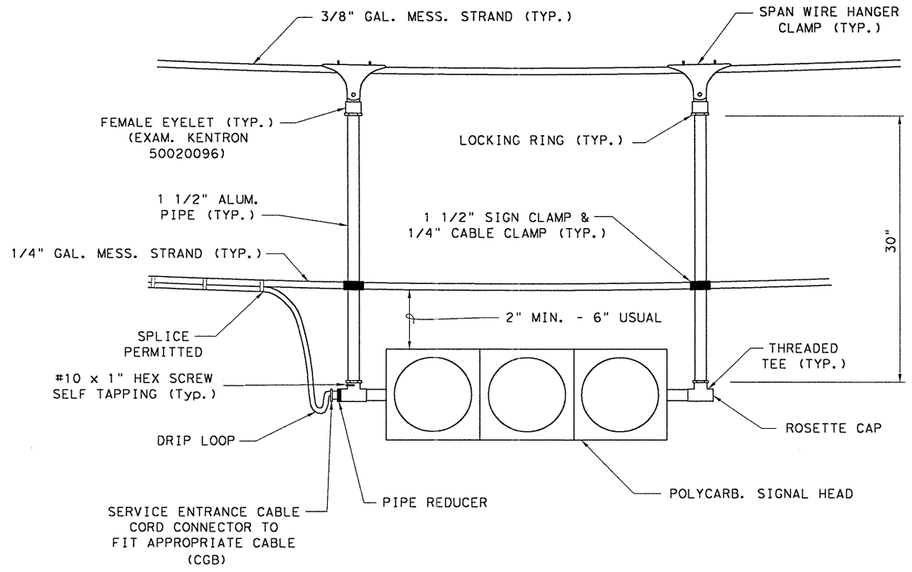

TYPE A

NOTE: BACKPLATES OMITTED FOR CLARITY.

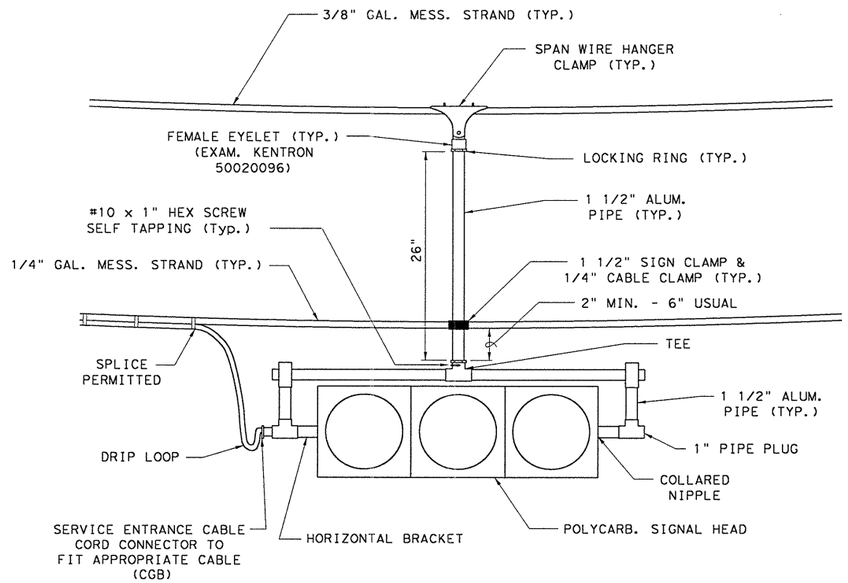

TYPE B

NOTE: BACKPLATES OMITTED FOR CLARITY.

© 2001 by Texas Department of Transportation; (512) 416-2055; all rights reserved

SIGNAL HEAD HORIZONTAL SPAN WIRE MOUNT DISTRICT

FED. ROAD DIV. NO.	STATE	FEDERAL AID PROJECT NO.			SHEET NO.
6	TEXAS	CC 337-1-29			204
STATE DIST. NO.	COUNTY	CONT. NO.	SEC. NO.	JOB NO.	HIGHWAY NO.
14	WILLIAMSON	0337	01	029	SH 29

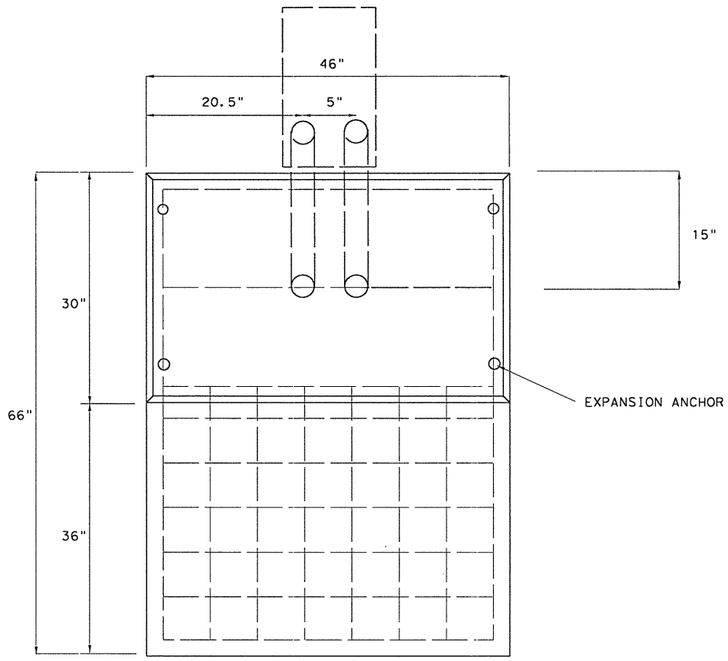

TOP VIEW

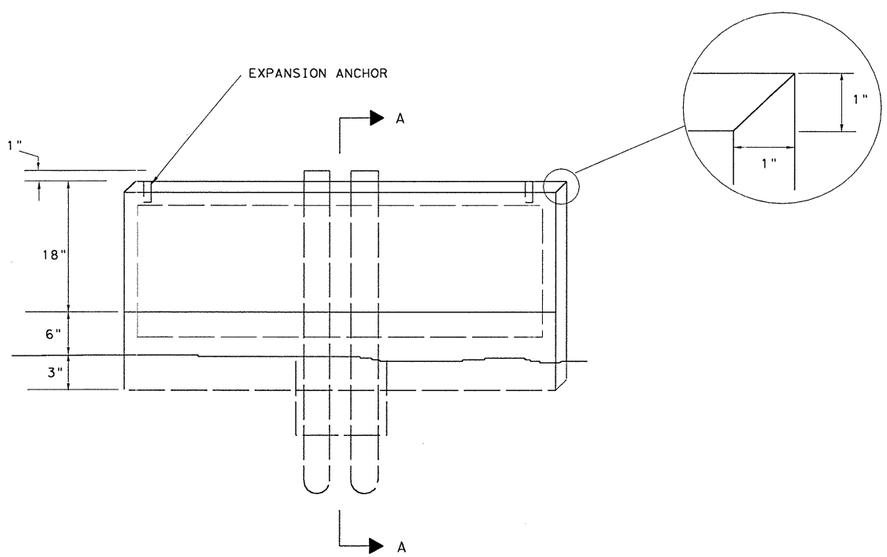

FRONT VIEW

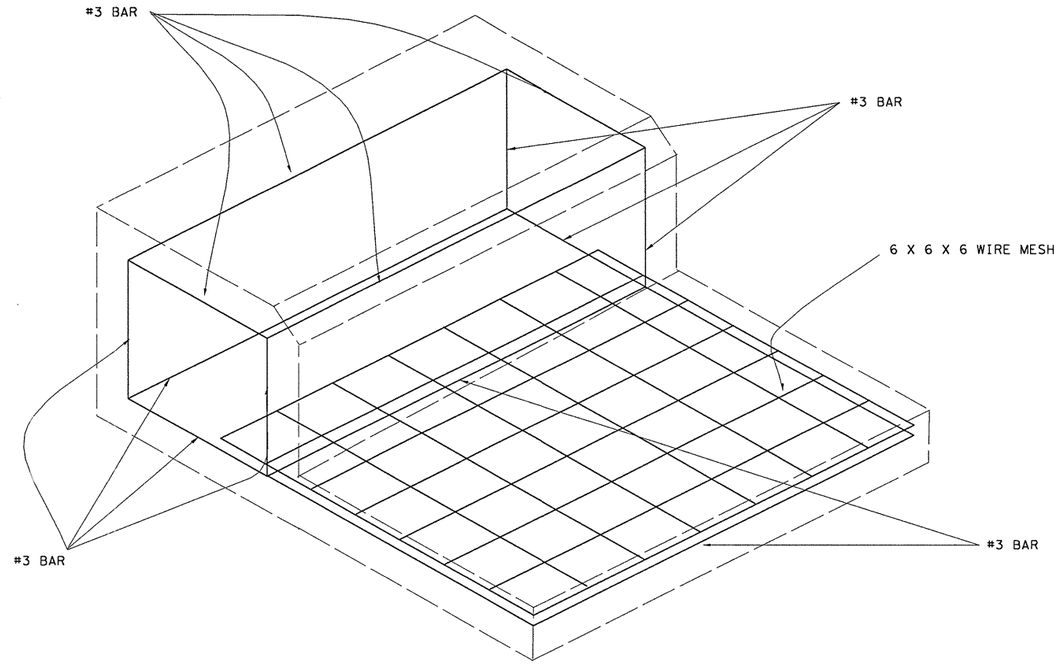

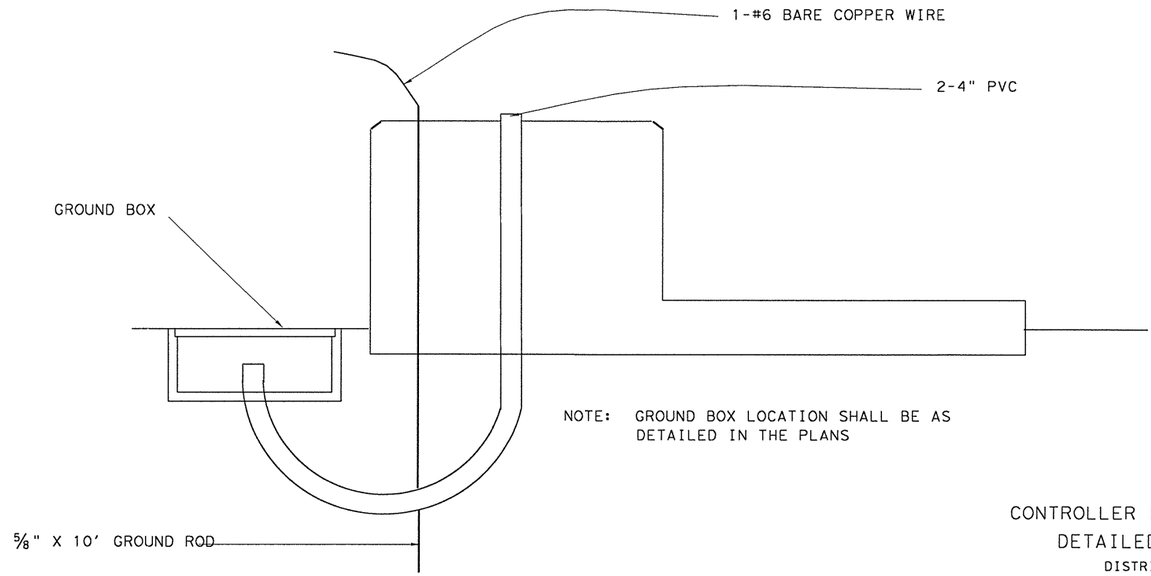

SECTION AA

© 2001 by Texas Department of Transportation;
(512) 416-2055; all rights reserved

CONTROLLER FOUNDATION DETAILED SHEET

DISTRICT 14

NO SCALE

FED. ROAD DIV. NO.	STATE	FEDERAL AID PROJECT NO.				SHEET NO.
6	TEXAS	CC 337-1-29				205
STATE DIST. NO.	COUNTY	CONT. NO.	SEC. NO.	JOB NO.		HIGHWAY NO.
14	WILLIAMSON	0337	01	029		SH 29

PROJECT INFORMATION

PROJECT LIMITS:

SH 29 IN WILLIAMSON COUNTY FROM D.B. WOOD TO IH 35.

PROJECT DESCRIPTION:

CONSTRUCTION CONSISTS OF A NEW ROADWAY ALIGNMENT AND THE RECONSTRUCTION OF AN EXISTING ROAD CONSISTING OF GRADING, STRUCTURES, ASPHALT CONCRETE PAVING, SIGNING, AND PAVEMENT MARKINGS.

LIST OF NON-STORM WATER DISCHARGES:

(NONE)

LIST OF SUPPORT ACTIVITIES TO BE PART OF SW3P:

1. EXCAVATED FILL MATERIAL STOCKPILE SITE.

LIST OF OFF-SITE / UTILITY INSTALLATIONS:

1. CONCRETE PLANT (CONCRETE TO BE OBTAINED FROM A COMMERCIAL SOURCE)

2. ASPHALT PLANT (ASPHALTIC MATERIAL TO BE OBTAINED FROM A COMMERCIAL COURSE)

3. CONTRACTOR'S DISPOSAL SITE. (FACILITY TO BE SECURED SOLELY BY THE CONTRACTOR)

4. CONTRACTOR'S PROJECT FIELD OFFICE/YARD. (FACILITY TO BE OPERATED SOLELY BY THE CONTRACTOR)

THREATENED/ENDANGERED SPECIES DETERMINATION:

WILLIAMSON COUNTY IS LISTED AS HAVING HABITAT FOR ENDANGERED/ THREATENED SPECIES. NO KNOWN OCCURRENCES OF ENDANGERED OR THREATENED SPECIES HAVE BEEN DOCUMENTED WITHIN THE PROJECT AREA. PROJECT ACTIVITIES AND STORM WATER DISCHARGE SHOULD HAVE NO ADVERSE IMPACT ON LISTED SPECIES. REFER TO PROJECT ENVIRONMENTAL ASSESMENT FOR MORE INFORMATION.

NATIONAL REGISTER OF HISTORICAL PLACES DETERMINATION:

DATA SEARCH AND SITE SURVEY PERFORMED AS PART OF THIS PROJECT'S ENVIRONMENTAL ASSESSMENT FOUND NO HISTORICALLY SIGNIFICANT PROPERTIES TO BE AFFECTED BY THIS PROJECT. REFER TO THIS PROJECT'S ENVIRONMENTAL ASSESSMENT FOR MORE INFORMATION.

NAME OF RECEIVING WATERS:

RUNOFF WATER FROM THIS PROPOSED CONSTRUCTION WOULD FLOW INTO THE SOUTH FORK OF SAN GABRIEL RIVER. THIS PORTION OF THE SAN GABRIEL RIVER IS SEGMENT NUMBER 1250 OF THE BRAZOS RIVER BASIN.

MAJOR SOIL DISTURBING ACTIVITIES:

SOIL DISTURBING ACTIVITIES ON THIS PROJECT WILL INCLUDE PREPARING THE R.O.W., GRADING, EXCAVATION AND EMBANKMENT FOR THE ROADWAYS, CULVERT EXTENTIONS, EROSION AND SEDIMENT CONTROL AND TOPSOIL WORK FOR FINAL PLANTING AND SEEDING.

TOTAL PROJECT AREA:	22.34 ACRES
TOTAL AREA TO BE DISTURBED:	20.11 ACRES (90%)

WEIGHTED RUNOFF COEFFICIENT (AFTER CONSTRUCTION):

0.42

EXISTING CONDITION OF SOIL & VEGETATIVE:

EXISTING SOILS ON THE PROJECT CONSIST FAT CLAY, SANDY LEAN CLAY AND SANDY FAT CLAY. THESE SOILS ARE COVERED ABOUT 85 PERCENT WITH TREES AND VARIOUS GRASSES.

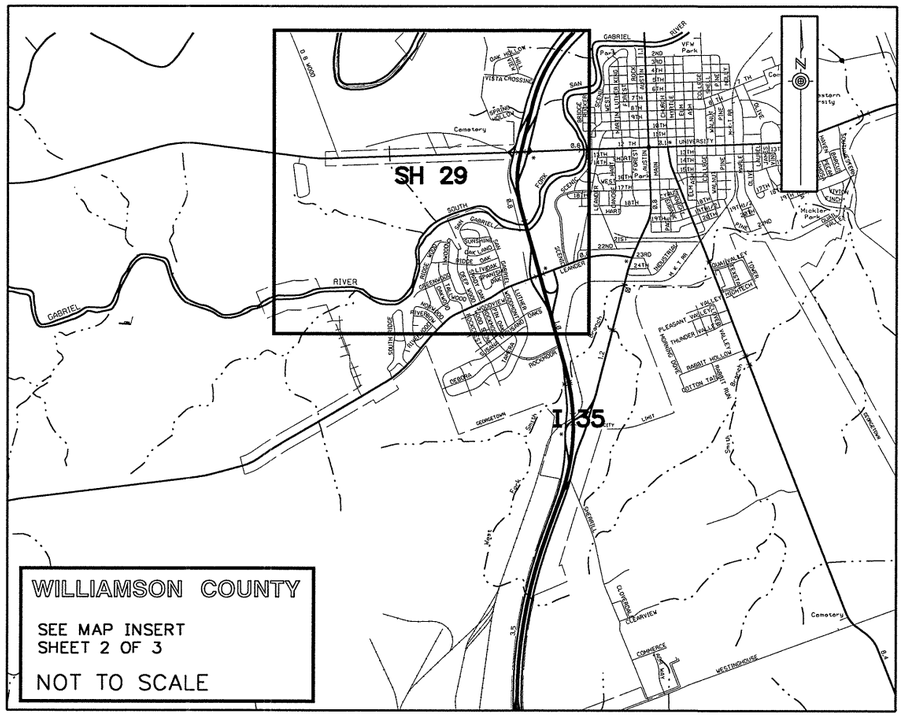

STATE OF TEXAS
JAMES J. ROOHMS
83383
LICENSED
PROFESSIONAL ENGINEER
9/22/2004

NO.	REVISION	BY	DATE

Chiang, Patel & Yerby, Inc.

© 2004

Texas Department of Transportation

SH 29

TXDOT STORM WATER POLLUTION PREVENTION PLAN (SW3P)

		FED. ROAD DIV. NO.	STATE	FEDERAL AID PROJECT NO.			SHEET NO.
Designed:	AJW	6	TEXAS	CC 337-1-29			206
Checked:	JJR	STATE DIST. NO.	COUNTY	CONTROL NO.	SECTION NO.	JOB NO.	HIGHWAY NO.
Drawn:	AJW	14	WILLIAMSON	0337	01	029	SH 29
Checked:	JJR						

MAP INSERT (NTS)

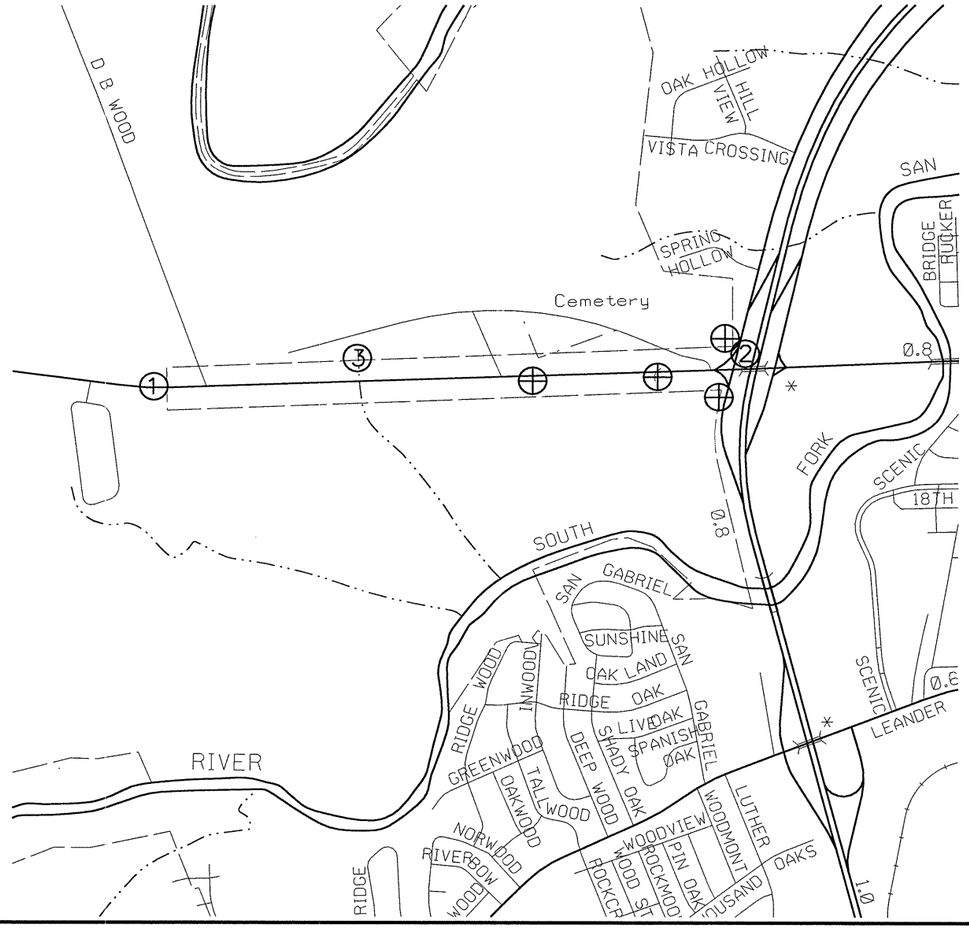

MAP LEGEND

① – BEGIN PROJECT
CSJ 0337-01-029
STA 139+95.00

② – END PROJECT
CSJ 0337-01-029
STA 186+62.71

③ – RECEIVING SURFACE WATER

⊕ – LOCATION OF STORM WATER DISCHARGES

LIST OF SW3P SUPPORTING DOCUMENTS.

1. REFER TO DRAINAGE PLAN AND SW3P SHEETS FOR:
   a) AREA OF SOIL DISTURBANCE
   b) LOCATIONS OF STRUCTURAL AND NON-STRUCTURAL CONTROL MEASURES
   c) LOCATIONS OF STABILIZATION PRACTICES
   d) LOCATIONS OF IMPERVIOUS SIDE SLOPE TREATMENTS

2. REFER TO DRAINAGE PLAN & SW3P SHEETS FOR:
   a) PROPOSED STORM DRAIN IMPROVEMENT AND DISCHARGE LOCATIONS.
   b) DRAINAGE PATTERNS OF COMPLETE SECTION.

3. REFER TO EC STANDARDS FOR STORM WATER CONTROL MEASURES AND CONSTRUCTION DETAILS.

STATE OF TEXAS
JAMES J. ROOHMS
83383
LICENSED
PROFESSIONAL ENGINEER
9/22/2004

NO.	REVISION	BY	DATE

CP&Y Chiang, Patel & Yerby, Inc.

© 2004

Texas Department of Transportation

SH 29

TXDOT STORM WATER POLLUTION PREVENTION PLAN (SW3P)

		FED. ROAD DIV. NO.	STATE	FEDERAL AID PROJECT NO.			SHEET NO.
Designed:	KGM	6	TEXAS	CC 337-1-29			207
Checked:	JJR	STATE DIST. NO.	COUNTY	CONTROL NO.	SECTION NO.	JOB NO.	HIGHWAY NO.
Drawn:	KGM	14	WILLIAMSON	0337	01	029	SH 29
Checked:	JJR						

NARRATIVE – SEQUENCE OF CONSTRUCTION
(STORM WATER MANAGEMENT)
ACTIVITIES:

THE ORDER OF ACTIVITIES WILL BE AS FOLLOWS:

1. INSTALL STORMWATER CONTROLS IN DITCHES. INSTALL CONSTRUCTION EXITS. REFER TO EROSION CONTROL SHEETS FOR LOCATIONS.

2. INSTALL PERIMETER CONTROLS AND EROSION CONTROL DEVICES AS SPECIFIED IN THE EROSION CONTROL PLANS.

3. CONSTRUCT BASE AND PAVEMENT SECTION AS SHOWN IN PHASE I TRAFFIC CONTROL PLANS.

4. REPEAT STEPS 1 THROUGH 3 FOR PHASE II.

5. WHEN ALL CONSTRUCTION ACTIVITY IS COMPLETE AND THE SITE IS STABILIZED AND APPROVED BY THE PROJECT ENGINEER, REMOVE ALL TEMPORARY STRUCTURAL CONTROLS AND RESEED ANY AREAS DISTURBED BY THEIR REMOVAL.

EROSION AND SEDIMENT CONTROLS

SOIL STABILIZATION PRACTICES:

_X_ TEMPORARY SEEDING
_X_ PERMANENT PLANTING, SODDING, OR SEEDING
_X_ MULCHING
___ SOIL RETENTION BLANKET
___ BUFFER ZONES
_X_ PRESERVATION OF NATURAL RESOURCES

NOTE:

1. INSTALL TEMPORARY SEEDING

2. INSTALL PERMANENT SEEDING

3. PLACE MULCH ON DISTURBED AREA AFTER SEEDING OPERATION.

OTHER: DISTURBED AREAS ON WHICH CONSTRUCTION ACTIVITY HAS CEASED, EITHER TEMPORARILY OR PERMANENTLY, SHALL BE STABILIZED WITHIN 14 DAYS UNLESS ACTIVITIES ARE SCHEDULED TO RESUME AND DO SO WITHIN 21 DAYS.

STRUCTURAL PRACTICES:

_T_ SILT FENCES
_T_ HAY BALES
___ ROCK BERMS
___ PIPE SLOPE DRAINS
___ PAVED FLUMES
_P_ CURBS AND GUTTERS
_P_ STORM SEWERS
_T_ ROCK BEDDING AT CONSTRUCTION EXIT
___ TIMBER MATTING AT CONSTRUCTION EXIT
___ DIVERSION, INTERCEPTOR, OR PERIMETER DIKES
___ DIVERSION, INTERCEPTOR, OR PERIMETER SWALES
___ DIVERSION DIKE AND SWALE COMBINATIONS
___ CHANNEL LINERS
___ SEDIMENT TRAPS
___ SEDIMENT BASINS
_T_ STORM INLET SEDIMENT TRAP
___ STONE OUTLET STRUCTURES
___ VELOCITY CONTROL DEVICES
___ SAND BAGS

NOTE:

1. INSTALL TEMPORARY SILT FENCES AT DOWNSTREAM DITCH OUTFALLS AND AT OTHER LOCATIONS AS CONSTRUCTION ACTIVITIES DICTATE.

2. INSTALL TEMPORARY ROCK FILTER DAMS ALONG AT DOWNSTREAM DITCH OUTFALLS AND AT OTHER LOCATIONS AS CONSTRUCTION ACTIVITIES DICTATE.

OTHER EROSION AND SEDIMENT CONTROLS:

MAINTENANCE:

ALL EROSION AND SEDIMENT CONTROLS WILL BE MAINTAINED IN GOOD WORKING ORDER. IF A REPAIR IS NECESSARY, IT WILL BE DONE AT THE EARLIEST DATE POSSIBLE, BUT NO LATER THAN 7 CALENDAR DAYS AFTER THE SURROUNDING EXPOSED GROUND HAS DRIED SUFFICIENTLY TO PREVENT FURTHER DAMAGE FROM HEAVY EQUIPMENT. THE AREAS ADJACENT TO CREEKS AND DRAINAGEWAYS SHALL HAVE PRIORITY FOLLOWED BY DEVICES PROTECTING STORM SEWER INLETS.

INSPECTION:

AN INSPECTION WILL BE PERFORMED BY A TxDOT INSPECTOR EVERY WEEK AS WELL AS AFTER EVERY HALF INCH OR MORE OF RAIN (AS RECORDED ON A NON-FREEZING RAIN GAUGE TO BE LOCATED AT THE PROJECT SITE). AN INSPECTION AND MAINTENANCE REPORT WILL BE MADE PER EACH INSPECTION. BASED ON THE INSPECTION RESULTS, THE CONTROLS SHALL BE REVISED PER THE INSPECTION REPORT.

WASTE MATERIALS:

ALL WASTE MATERIALS WILL BE COLLECTED AND STORED IN A SECURELY LIDDED METAL DUMPSTER. THE DUMPSTER WILL MEET ALL STATE AND LOCAL CITY SOLID WASTE MANAGEMENT REGULATIONS. ALL TRASH AND CONSTRUCTION DEBRIS FROM THE SITE WILL BE DEPOSITED IN THE DUMPSTER. THE DUMPSTER WILL BE EMPTIED AS NECESSARY OR AS REQUIRED BY LOCAL REGULATION, AND THE TRASH WILL BE HAULED TO A LOCAL DUMP. NO CONSTRUCTION WASTE MATERIAL WILL BE BURIED ON SITE.

HAZARDOUS WASTE (INCLUDING SPILL REPORTING):

AT A MINIMUM, ANY PRODUCTS IN THE FOLLOWING CATAGORIES ARE CONSIDERED TO BE HAZARDOUS: PAINTS, ACIDS FOR CLEANING MASONRY SURFACES, OTHER CLEANING SOLVENTS, ASPHALT PRODUCTS, CHEMICAL ADDITIVES FOR SOIL STABILIZATION OR CONCRETE CURING COMPOUNDS AND ADDITIVES. IN THE EVENT OF A SPILL WHICH MAY BE HAZARDOUS, THE TxDOT PROJECT MANAGER SHOULD BE CONTACTED IMMEDIATELY.

SANITARY WASTE:

ALL SANITARY WASTE WILL BE COLLECTED FROM THE PORTABLE UNITS AS NECESSARY OR AS REQUIRED BY LOCAL REGULATION BY A LICENSED SANITARY WASTE MANAGEMENT CONTRACTOR.

OFF SITE VEHICLE TRACKING:

_X_ HAUL ROADS DAMPENED FOR DUST CONTROL
_X_ LOADED HAUL TRUCKS TO BE COVERED WITH TARPAULIN
_X_ EXCESS DIRT ON ROAD REMOVED DAILY
_X_ STABILIZED CONSTRUCTION ENTRANCE

REMARKS:

DISPOSAL AREAS, STOCKPILES, AND HAUL ROADS SHALL BE CONSTRUCTED IN A MANNER THAT WILL MINIMIZE AND CONTROL THE AMOUNT OF SEDIMENT THAT MAY ENTER RECEIVING WATERS. DISPOSAL AREAS SHALL NOT BE LOCATED IN ANY WETLAND, WATERBODY, OR STREAMBED.

CONSTRUCTION STAGING AREAS AND VEHICLE MAINTENANCE AREAS SHALL BE CONSTRUCTED BY THE CONTRACTOR IN A MANNER TO MINIMIZE THE RUNOFF OF POLLUTANTS. ALL WATER WAYS SHALL BE CLEARED AS SOON AS PRACTICABLE OF TEMPORARY EMBANKMENT, DEBRIS, OR OTHER OBSTRUCTIONS .

STATE OF TEXAS
JAMES J. ROOHMS
83383
LICENSED
PROFESSIONAL ENGINEER
9/22/2004

NO.	REVISION	BY	DATE

CP&Y Chiang, Patel & Yerby, Inc.

© 2004

Texas Department of Transportation

SH 29

TXDOT STORM WATER POLLUTION PREVENTION PLAN (SW3P)

		FED. ROAD DIV. NO.	STATE	FEDERAL AID PROJECT NO.				SHEET NO.
Designed:	AJW	6	TEXAS	CC 337-1-29				2-08
Checked:	JJR	STATE DIST. NO.	COUNTY	CONTROL NO.	SECTION NO.	JOB NO.	HIGHWAY NO.	
Drawn:	AJW	14	WILLIAMSON	0337	01	029	SH 29	
Checked:	JJR							

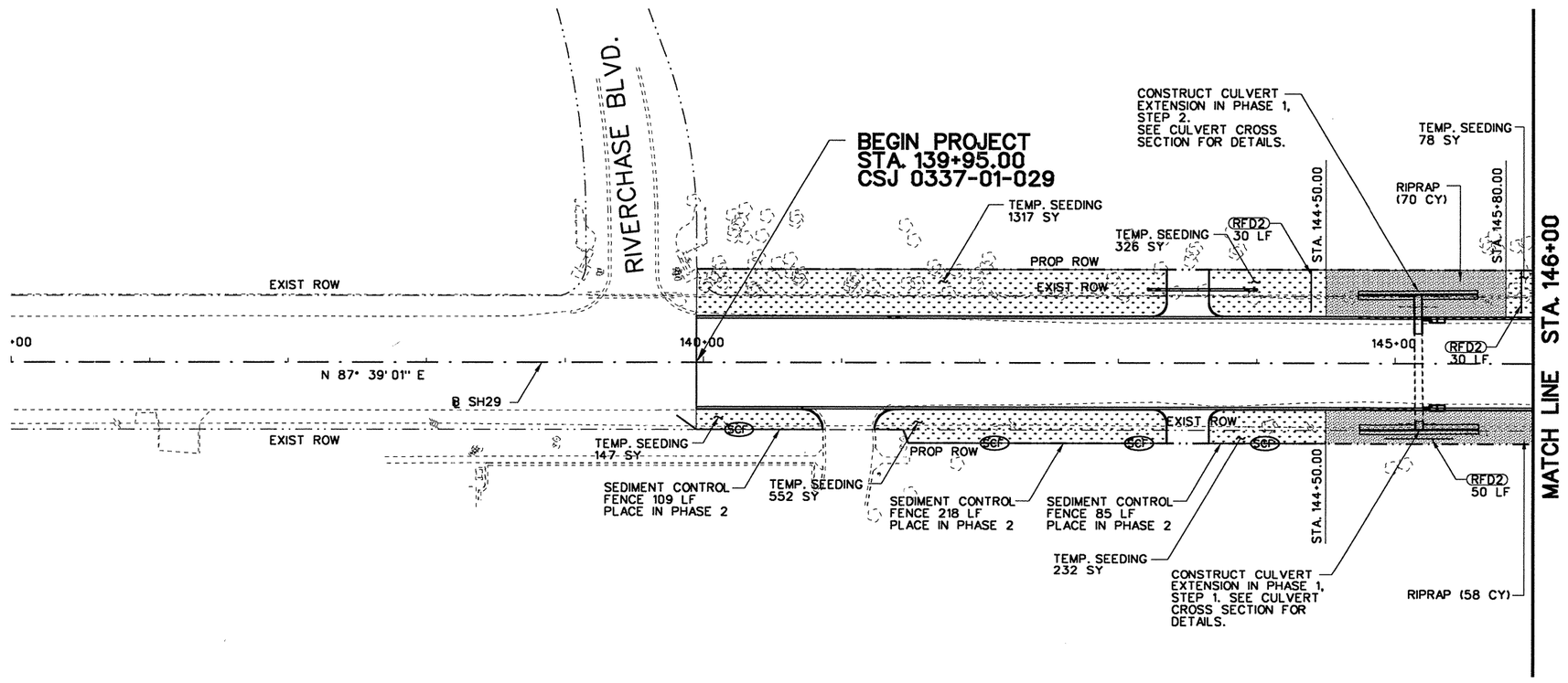

N

50 25 0 50 100

SCALE FEET

LEGEND

- SCF — SEDIMENT CONTROL FENCE
- RFD2 — TYPE 2 ROCK FILTER DAM
- SEEDING/VEGETATION
- LANDSCAPE PAVERS

NOTES:

1. ALL STRUCTURES TO BE PLACED AS SHOWN IN STANDARDS EC(1) - EC(3) AND EC(6) EXCEPT AS SHOWN IN MISCELLANEOUS DETAILS.
2. ALL PERIMETER SEDIMENT CONTROL FENCE TO REMAIN UNTIL END OF CONSTRUCTION.
3. ALL ROCK FILTER DAMS WILL BE PLACED DURING PHASE 1-1 AND WILL REMAIN UNTIL END OF CONSTRUCTION.
4. ALL INLETS ALONG WESTBOUND SH 29 WILL BE CONSTRUCTED IN PHASE 1-1.
5. ALL INLETS ALONG EASTBOUND SH 29 WILL BE CONSTRUCTED IN PHASE 2.
6. ALL INLETS WILL HAVE INLET PROTECTION UNTIL END OF CONSTRUCTION.

STATE OF TEXAS
JAMES J. ROOHMS
83383
LICENSED
PROFESSIONAL ENGINEER
9/24/2004

NO.	REVISION	BY	DATE

Chiang, Patel & Yerby, Inc.

© 2004

Texas Department of Transportation

SH 29

EROSION CONTROL PLAN

BEGIN PROJECT TO STA. 146+00

Designed:	AJW	FED. ROAD DIV. NO.	STATE	FEDERAL AID PROJECT NO.					SHEET NO.
Checked:	JJR	6	TEXAS	CC 337-1-29					204
Drawn:	AJW	STATE DIST. NO.	COUNTY		CONTROL NO.	SECTION NO.	JOB NO.	HIGHWAY NO.	
Checked:	JJR	14	WILLIAMSON		0337	01	029	SH 29	

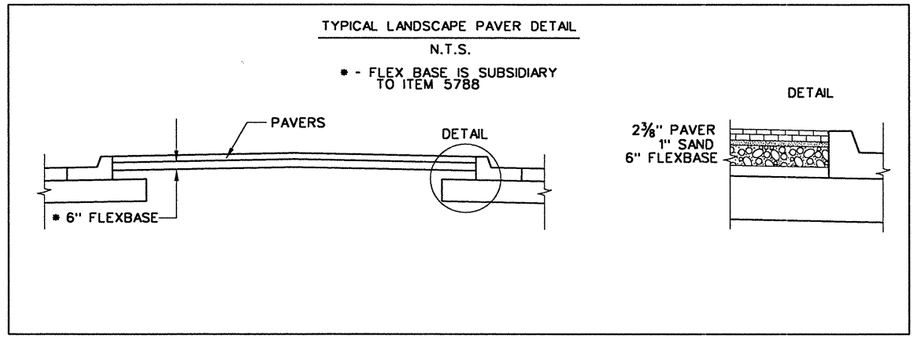

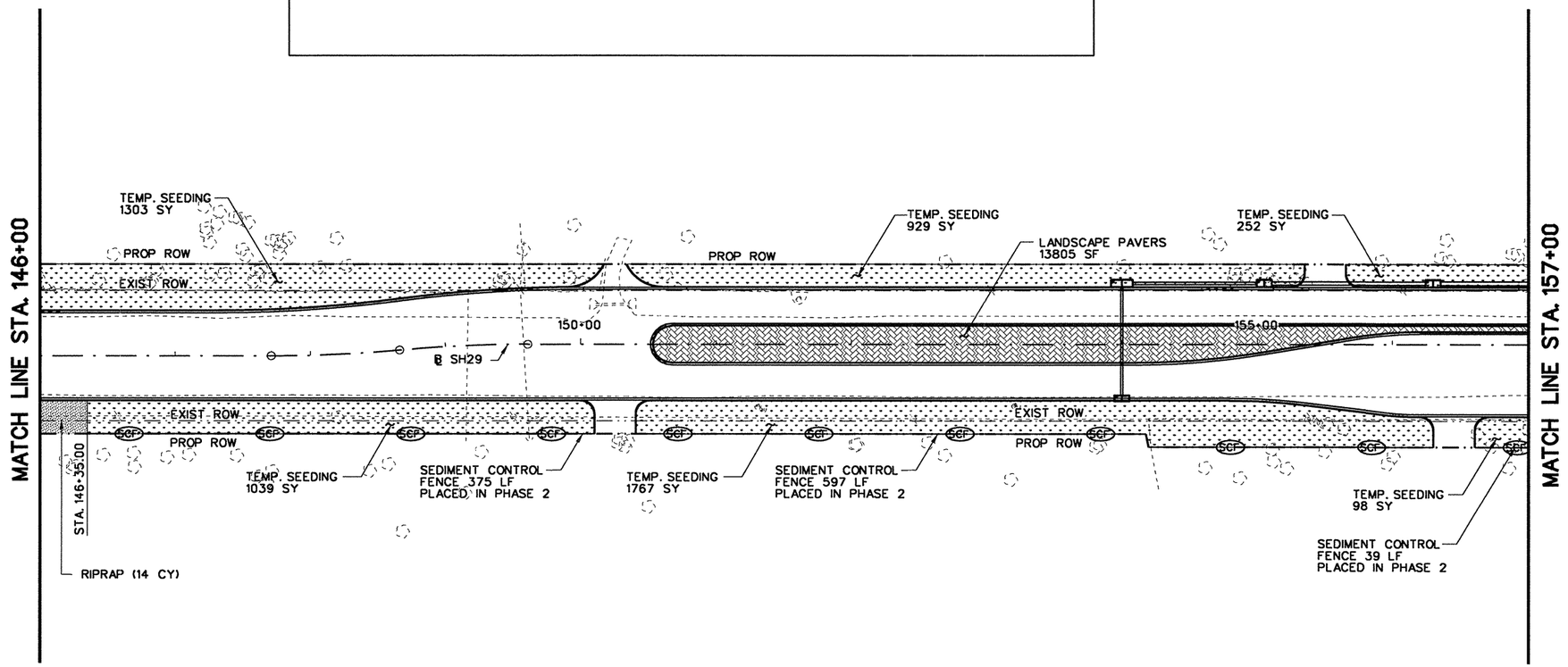

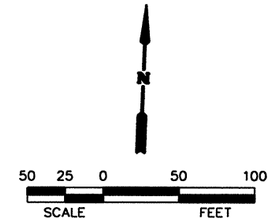

LEGEND

- SCF — SEDIMENT CONTROL FENCE
- RFD2 — TYPE 2 ROCK FILTER DAM
- SEEDING/VEGETATION
- LANDSCAPE PAVERS

NOTES:

1. ALL STRUCTURES TO BE PLACED AS SHOWN IN STANDARDS EC(1) - EC(3) AND EC(6) EXCEPT AS SHOWN IN MISCELLANEOUS DETAILS.
2. ALL PERIMETER SEDIMENT CONTROL FENCE TO REMAIN UNTIL END OF CONSTRUCTION.
3. ALL ROCK FILTER DAMS WILL BE PLACED DURING PHASE 1-1 AND WILL REMAIN UNTIL END OF CONSTRUCTION.
4. ALL INLETS ALONG WESTBOUND SH 29 WILL BE CONSTRUCTED IN PHASE 1-1.
5. ALL INLETS ALONG EASTBOUND SH 29 WILL BE CONSTRUCTED IN PHASE 2.
6. ALL INLETS WILL HAVE INLET PROTECTION UNTIL END OF CONSTRUCTION.

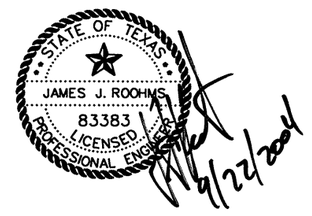

NO.	REVISION	BY	DATE

CP&Y Chiang, Patel & Yerby, Inc.

© 2004

Texas Department of Transportation

SH 29

EROSION CONTROL PLAN
STA. 146+00 TO STA. 157+00

Designed:	AJW	FED. ROAD DIV. NO.	STATE	FEDERAL AID PROJECT NO.					SHEET NO.
Checked:	JJR	6	TEXAS	CC 337-1-29					210
Drawn:	AJW	STATE DIST. NO.	COUNTY		CONTROL NO.	SECTION NO.	JOB NO.		HIGHWAY NO.
Checked:	JJR	14	WILLIAMSON		0337	01	029		SH 29

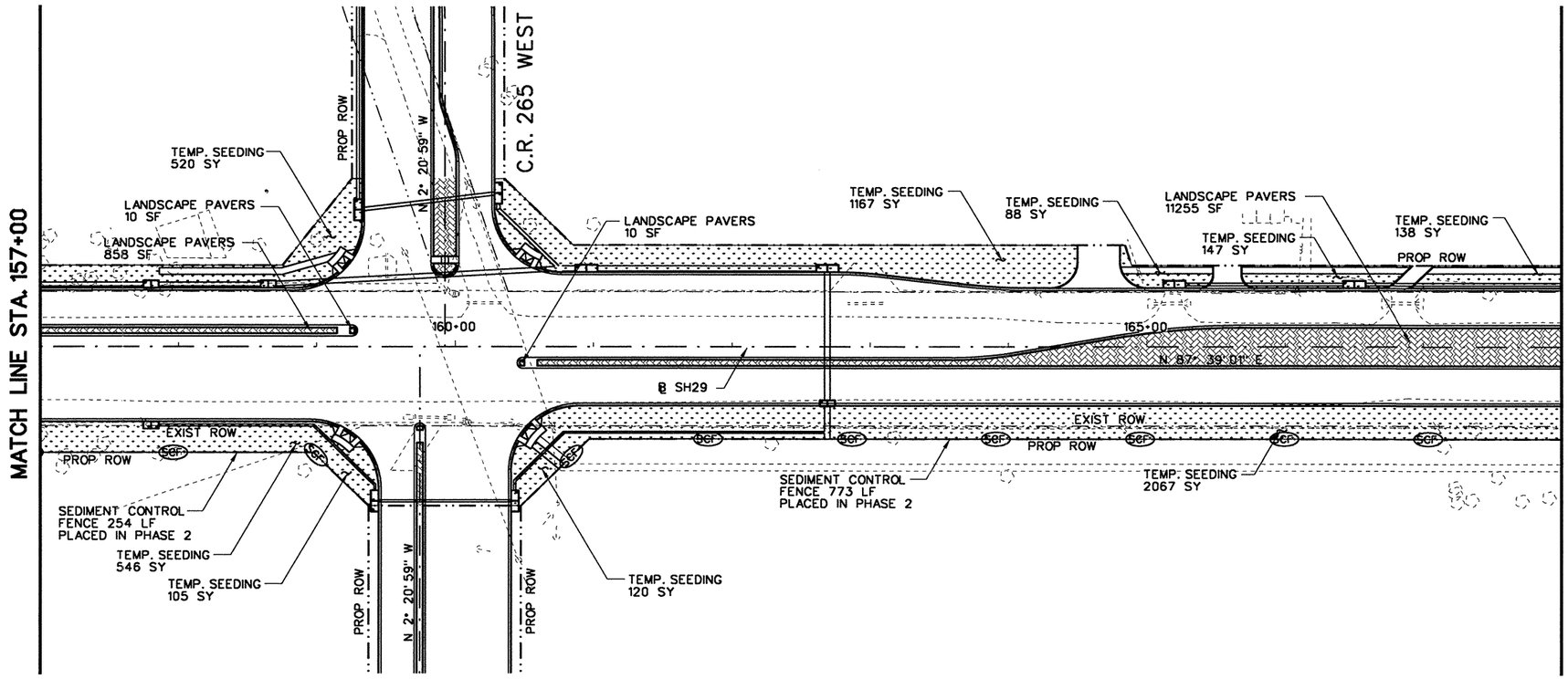

N

50 25 0 50 100

SCALE FEET

LEGEND

- SCF — SEDIMENT CONTROL FENCE
- RFD2 — TYPE 2 ROCK FILTER DAM
- SEEDING/VEGETATION
- LANDSCAPE PAVERS

NOTES:

1. ALL STRUCTURES TO BE PLACED AS SHOWN IN STANDARDS EC(1) - EC(3) AND EC(6) EXCEPT AS SHOWN IN MISCELLANEOUS DETAILS.
2. ALL PERIMETER SEDIMENT CONTROL FENCE TO REMAIN UNTIL END OF CONSTRUCTION.
3. ALL ROCK FILTER DAMS WILL BE PLACED DURING PHASE 1-1 AND WILL REMAIN UNTIL END OF CONSTRUCTION.
4. ALL INLETS ALONG WESTBOUND SH 29 WILL BE CONSTRUCTED IN PHASE 1-1.
5. ALL INLETS ALONG EASTBOUND SH 29 WILL BE CONSTRUCTED IN PHASE 2.
6. ALL INLETS WILL HAVE INLET PROTECTION UNTIL END OF CONSTRUCTION.

STATE OF TEXAS
JAMES J. ROOHMS
83383
LICENSED
PROFESSIONAL ENGINEER
9/22/2004

NO.	REVISION	BY	DATE

CP&Y Chiang, Patel & Yerby, Inc.

© 2004

Texas Department of Transportation

SH 29

EROSION CONTROL PLAN
STA. 157+00 TO STA. 168+00

		FED. ROAD DIV. NO.	STATE	FEDERAL AID PROJECT NO.				SHEET NO.
Designed:	AJW	6	TEXAS	CC 337-1-29				21
Checked:	JJR	STATE DIST. NO.	COUNTY	CONTROL NO.	SECTION NO.	JOB NO.	HIGHWAY NO.	
Drawn:	AJW	14	WILLIAMSON	0337	01	029	SH 29	
Checked:	JJR							

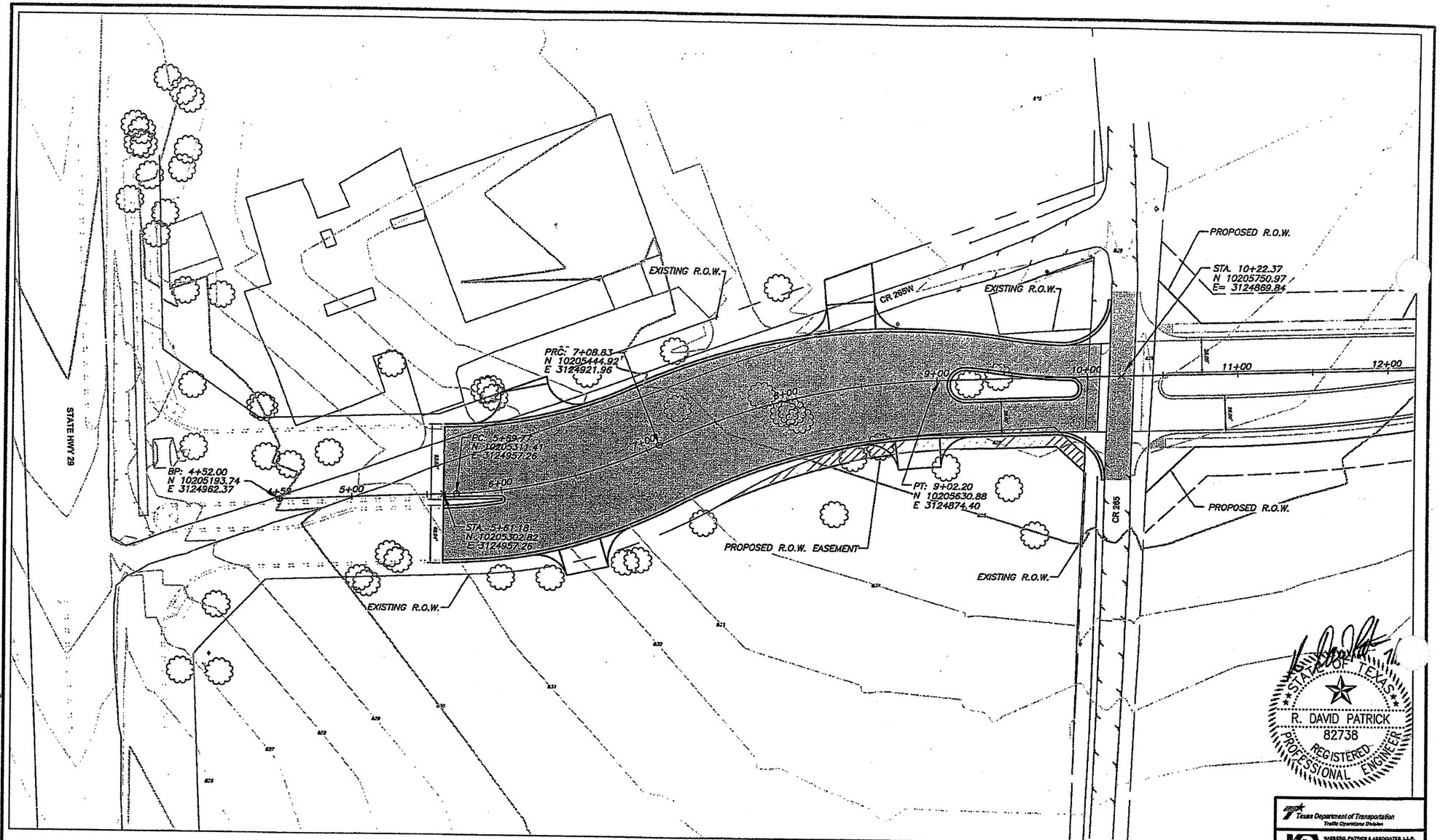

MASTER LAYOUT AND COORDINATES MAP

0 30 60
GRAPHIC SCALE IN FEET

NORTH

Texas Department of Transportation
Traffic Operations Division

KASBERG, PATRICK & ASSOCIATES, L.L.P.
CONSULTING ENGINEERS
TEMPLE, TEXAS 76501

FED.RD. DIV.NO.	AID PROJECT NO.		SHEET NO.
6	CC-337-1-29		211a
STATE	DIST.	COUNTY	
TEXAS	14	WILLIAMSON	
CONT.	SECT.	JOB	HIGHWAY NO.
337	1	29	CR265 - SH29

2004-120-22

P:\Georgetown\2004\2004-120-22\cad\revisions7-11\PP-01.dwg

C.O. #6

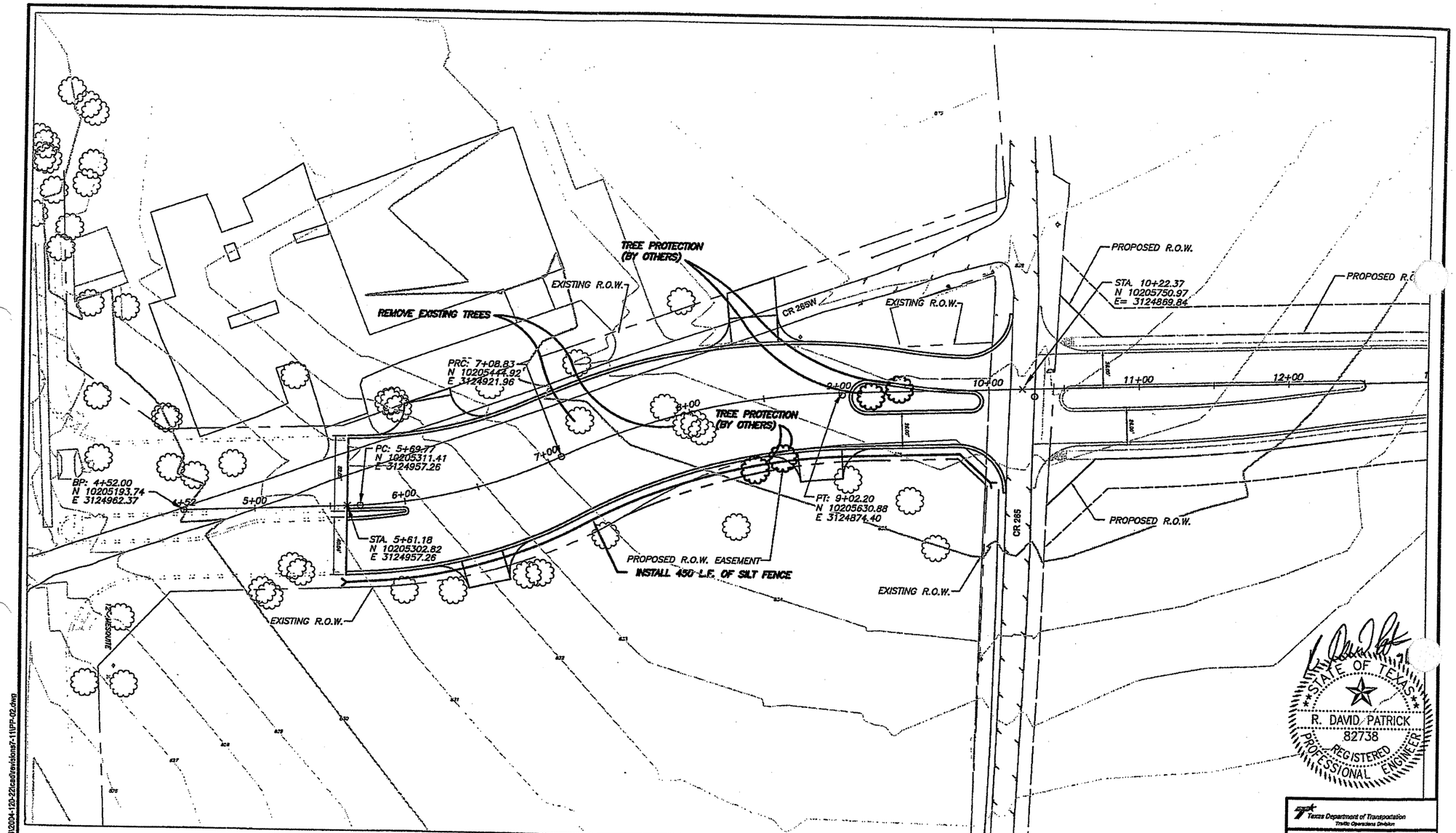

EROSION CONTROL LAYOUT SHEET

GRAPHIC SCALE IN FEET

Texas Department of Transportation
Traffic Operations Division

KASBERG, PATRICK & ASSOCIATES, L.L.P.
CONSULTING ENGINEERS
TEMPLE, TEXAS 76501

FEDERAL PROJ. NO.	AID PROJECT NO.		SHEET NO.
6	CC-337-1-29		211B
STATE	DIST.	COUNTY	
TEXAS	14	WILLIAMSON	
CONT.	SECT.	JOB	HIGHWAY NO.
337	1	29	CR265 - SH29

2004-120-22

P:\Georgetown\2004\2004-120-22\cad\revisions\7-11\PP-02.dwg

C.O. #6

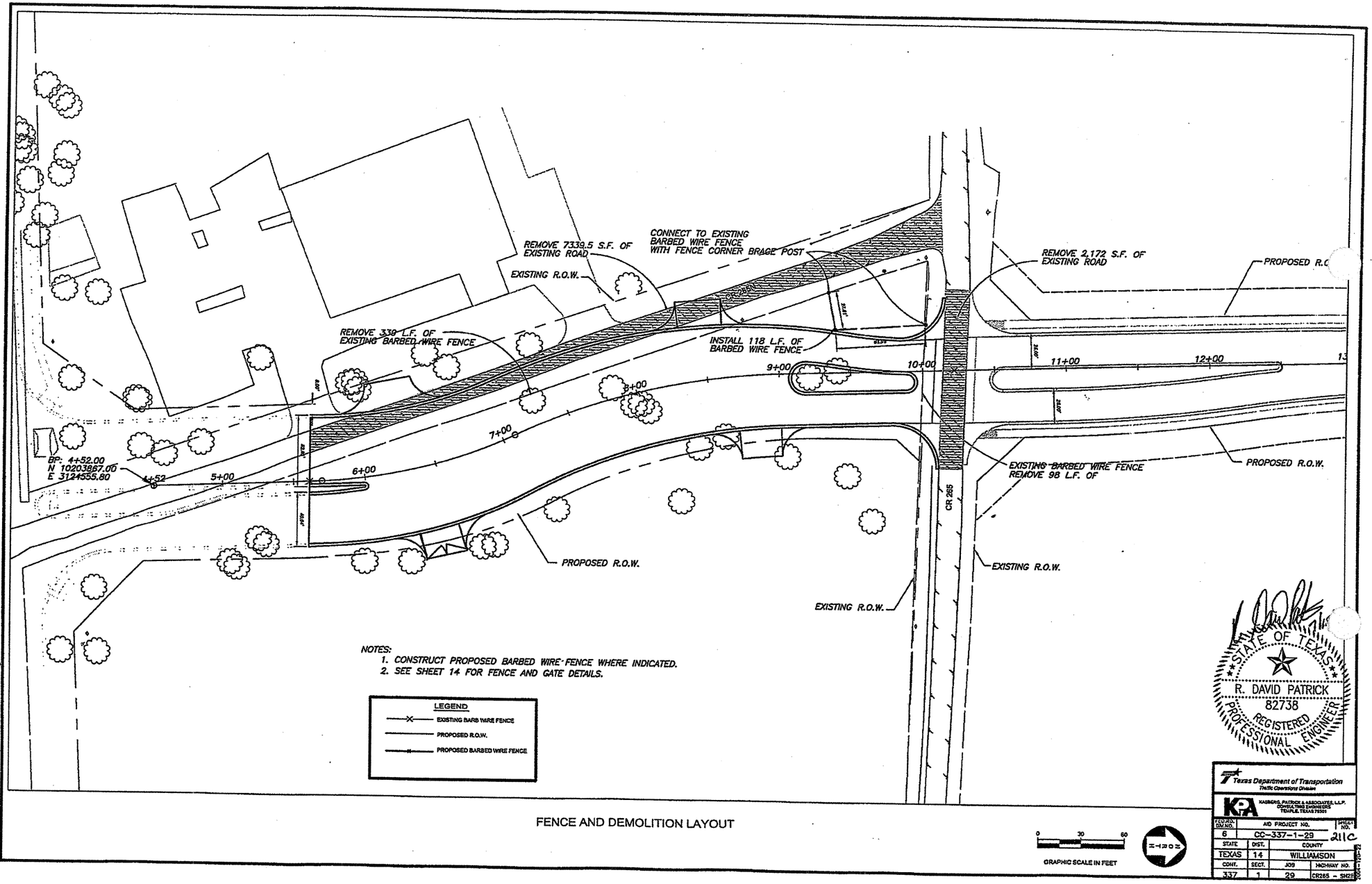

NOTES:

1. CONSTRUCT PROPOSED BARBED WIRE FENCE WHERE INDICATED.
2. SEE SHEET 14 FOR FENCE AND GATE DETAILS.

LEGEND

- EXISTING BARB WIRE FENCE
- PROPOSED R.O.W.
- PROPOSED BARBED WIRE FENCE

FENCE AND DEMOLITION LAYOUT

GRAPHIC SCALE IN FEET

STATE OF TEXAS
R. DAVID PATRICK
82738
REGISTERED
PROFESSIONAL ENGINEER

Texas Department of Transportation
Traffic Operations Division

KASBERG, PATRICK & ASSOCIATES, L.L.P.
CONSULTING ENGINEERS
TEMPLE, TEXAS 76503

FED.RD. DIV.NO.	AID PROJECT NO.		SHEET NO.
6	CC-337-1-29		21C
STATE	DIST.	COUNTY	
TEXAS	14	WILLIAMSON	
CONT.	SECT.	JOB	HIGHWAY NO.
337	1	29	CR265 - SH29

P:\Georgetown\2004\2004-120-22\cad\revisions\7-11\PP-03.dwg

C.O. #6

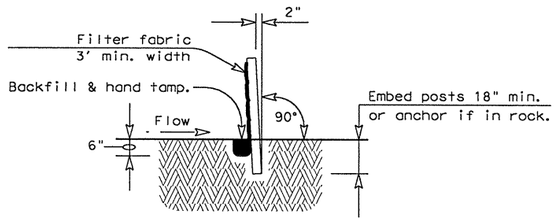

SECTION A-A

SEDIMENT CONTROL FENCE USAGE GUIDELINES

A sediment control fence may be constructed near the downstream perimeter of a disturbed area along a contour to intercept sediment from overland runoff. A 2 year storm frequency may be used to calculate the flow rate to be filtered.

Sediment control fence should be sized to filter a max. flow through rate of 100 GPM/FT^2. Sediment control fence is not recommended to control erosion from a drainage area larger than 2 acres.

PLAN SHEET LEGEND

Sediment Control Fence —— SCF ——

GENERAL NOTES

1. The guidelines shown hereon are suggestions only and may be modified by the Engineer.

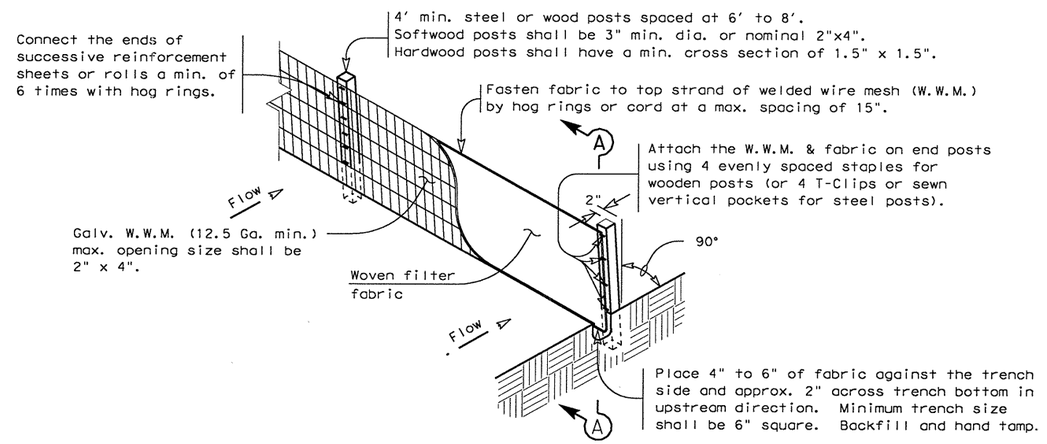

TEMPORARY SEDIMENT CONTROL FENCE

—— SCF ——

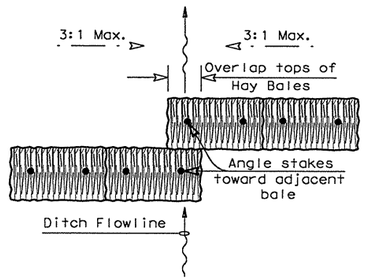

PLAN VIEW

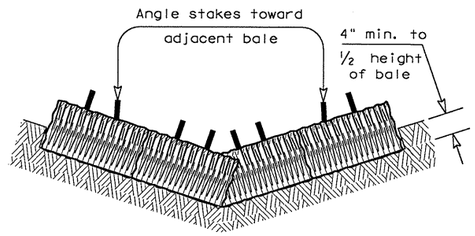

PROFILE VIEW

PLANS SHEET LEGEND

Baled Hay —— BH ——

BALED HAY USAGE GUIDELINES

A Baled Hay installation may be constructed near the downstream perimeter of a disturbed area along a contour to intercept sediment from overland runoff. A two year storm frequency may be used to calculate the flow rate to be filtered. The installation should be sized to filter a maximum flow thru rate of 5 GPM/FT^2 of cross sectional area. Baled hay may be used at the following locations:

1. Where the runoff approaching the baled hay flows over disturbed soil for less than 100'. If the slope of the disturbed soil exceeds 10%, the length of slope upstream the baled hay should be less than 50'.
2. Where the installation will be required for less than 3 months.
3. Where the contributing drainage area is less than ½ acre.

For Baled Hay installations in small ditches, the additional following considerations apply:

1. The ditch sideslopes should be graded as flat as possible to maximize the drainage flowrate thru the hay.
2. The ditch should be graded large enough to contain the overtopping drainage when sediment has filled to the top of the baled hay.

Bales should be replaced usually every 2 months or more often during wet weather when loss of structural integrity is accelerated.

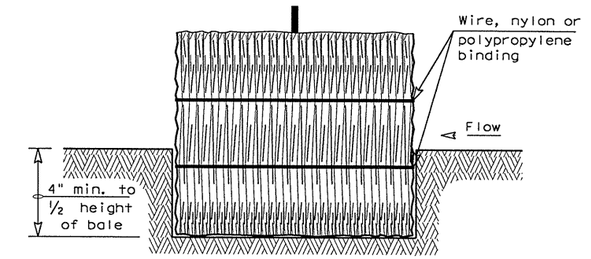

SECTION B-B

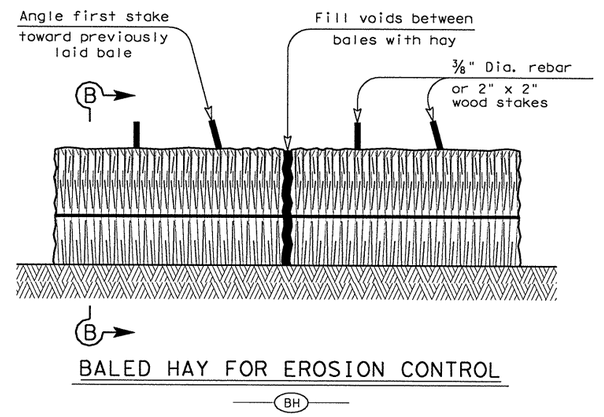

BALED HAY FOR EROSION CONTROL

—— BH ——

GENERAL NOTES

1. Hay bales shall be a minimum of 30" in length and weigh a minimum of 50 Lbs.
2. Hay bales shall be bound by either wire or nylon or polypropylene string. The bales shall be composed entirely of vegetative matter.
3. Hay bales shall be embedded in the soil a minimum of 4" and where possible ½ the height of the bale.
4. Hay bales shall be placed in a row with ends tightly abutting the adjacent bales. The bales shall be placed with bindings parallel to the ground.
5. Hay bales shall be securely anchored in place with ⅜" Dia. rebar or 2" x 2" wood stakes, driven through the bales. The first stake shall be angled towards the previously laid bale to force the bales together.
6. The guidelines shown hereon are suggestions only and may be modified by the Engineer.

Texas Department of Transportation
Design Division (Roadway)

TEMPORARY EROSION, SEDIMENT AND WATER POLLUTION CONTROL MEASURES

FENCED & BALED HAY

EC(1)-93

FILE: EC193.DGN	DN: HEJ	CK: HEJ	DW: BGD	CK:	
©TxDOT JUNE 1993	DISTRICT	FEDERAL AID PROJECT			SHEET
REVISIONS	AUS	CC 337-1-29			216
	COUNTY		CONTROL	SECT	JOB	HIGHWAY
	WILLIAMSON		0337	01	029	SH 29

...\erosion\ec193.dgn 09/21/2004 10:13:23 AM

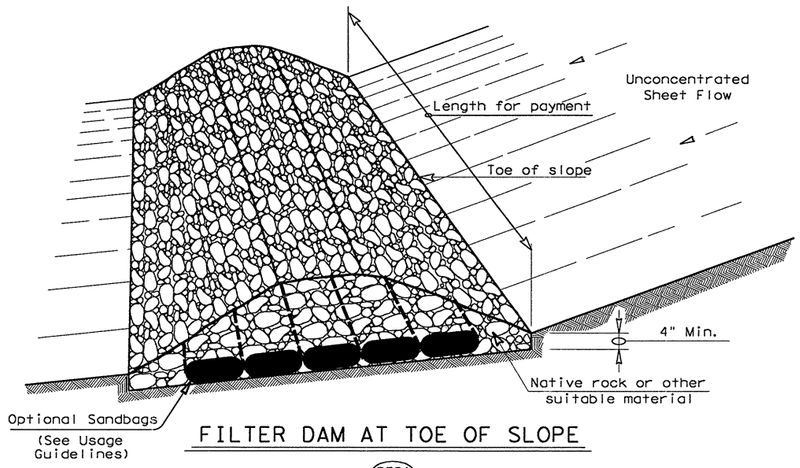

FILTER DAM AT TOE OF SLOPE

RFD1

TYPE 1

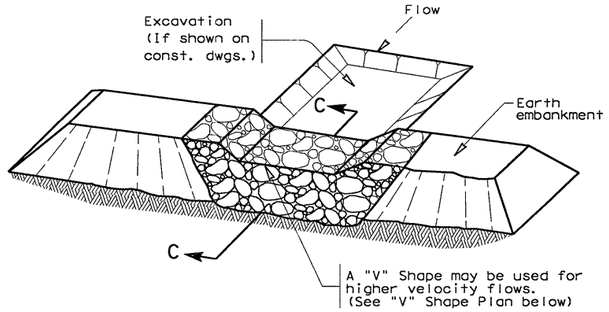

FILTER DAM AT SEDIMENT TRAP

RFD1 OR RFD2

TYPE 1 OR TYPE 2

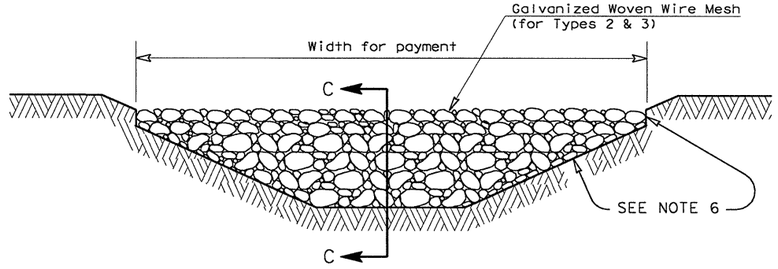

FILTER DAM AT CHANNEL SECTIONS

RFD1 OR RFD2 OR RFD3

TYPE 1 OR TYPE 2

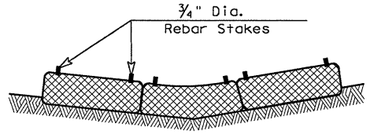

SECTION B-B

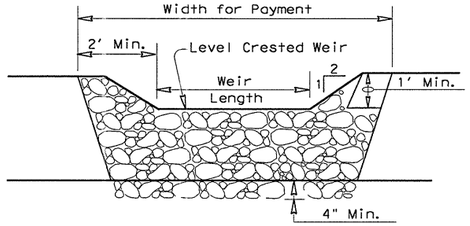

PROFILE

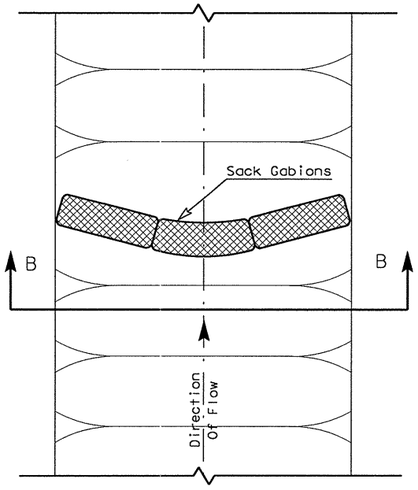

PLAN VIEW

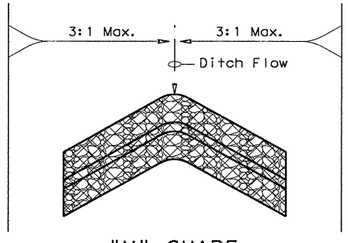

"V" SHAPE

(Plan View)

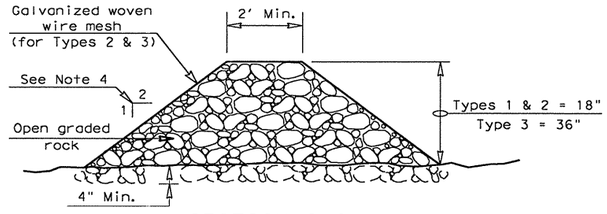

SECTION C-C

PLANS SHEET LEGEND

Type 1 Rock Filter Dam — RFD1

Type 2 Rock Filter Dam — RFD2

Type 3 Rock Filter Dam — RFD3

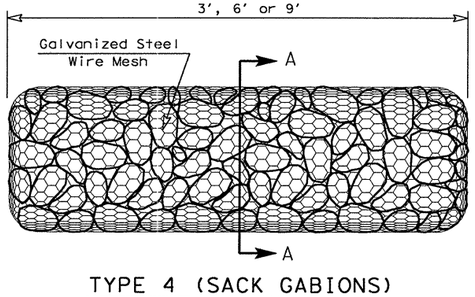

TYPE 4 (SACK GABIONS)

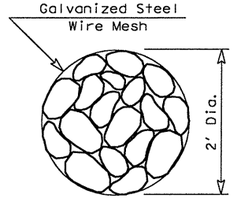

SECTION A-A

ROCK FILTER DAM USAGE GUIDELINES

Rock Filter Dams should be constructed downstream from disturbed areas to intercept sediment from overland runoff and/or concentrated flow. The dams should be sized to filter a maximum flow through rate of 60 GPM/FT^2 of cross sectional area. A 2 year storm frequency may be used to calculate the flow rate.

Type 1 (18" high with no wire mesh): Type 1 may be used at the toe of slopes, around inlets, in small ditches, and at dike or swale outlets. This type of dam is recommended to control erosion from a drainage area of 5 acres or less. Type 1 may not be used in concentrated high velocity flows (approx. 8 Ft/Sec or more) in which aggregate wash out may occur. Sandbags may be used at the embedded foundation (4" deep min.) for better filtering efficiency of low flows if called for on the plans or directed by the Engineer.

Type 2 (18" high with wire mesh): Type 2 may be used in ditches and at dike or swale outlets.

Type 3 (36" high with wire mesh): Type 3 may be used in stream flow and should be secured to the stream bed.

Type 4 (Sack gabions): Type 4 May be used in ditches and smaller channels to form an erosion control dam.

GENERAL NOTES

1. If shown on the plans or directed by the Engineer, filter dams should be placed near the toe of slopes where erosion is anticipated, upstream and/or downstream at drainage structures, and in roadway ditches and channels to collect sediment.
2. Materials (aggregate, wire mesh, sandbags, etc.) shall be as indicated by the specification for "Rock Filter Dams for Erosion and Sedimentation Control".
3. The rock filter dam dimensions shall be as indicated on the SW3P plans.
4. Side slopes should be 2:1 or flatter. Dams within the safety zone shall have sideslopes of 6:1 or flatter.
5. Maintain a minimum of 1' between top of rock filter dam weir and top of embankment for filter dams at sediment traps.
6. Filter dams should be embedded a minimum of 4" into existing ground.
7. The sediment trap for ponding of sediment laden runoff shall be of the dimensions shown on the plans.
8. Rock filter dam types 2 & 3 shall be secured with 20 gauge galvanized woven wire mesh with 1" diameter hexagonal openings. The aggregate shall be placed on the mesh to the height & slopes specified. The mesh shall be folded at the upstream side over the aggregate and tightly secured to itself on the downstream side using wire ties or hog rings. In stream use the mesh should be secured or staked to the stream bed prior to aggregate placement.
9. Sack Gabions should be staked down with ¾" dia. rebar stakes.
10. Flow outlet should be onto a stabilized area (vegetation, rock, etc.).
11. The guidelines shown hereon are suggestions only and may be modified by the Engineer.

Texas Department of Transportation
Design Division (Roadway)

TEMPORARY EROSION, SEDIMENT AND WATER POLLUTION CONTROL MEASURES

ROCK FILTER DAMS

EC(2)-93

FILE: EC293.DGN	DN: HEJ	CK: HEJ	DW: BGD	CK:	
©TxDOT JUNE 1993	DISTRICT	FEDERAL AID PROJECT			SHEET
REVISIONS	AUS	CC 337-1-29			7
	COUNTY		CONTROL	SECT	JOB	HIGHWAY
	WILLIAMSON		0337	01	029	SH 29

...\erosion\ec293.dgn 09/21/2004 10:13:24 AM

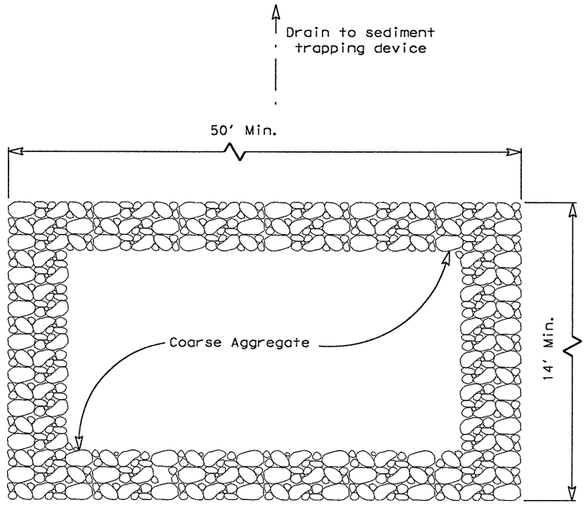

PLAN

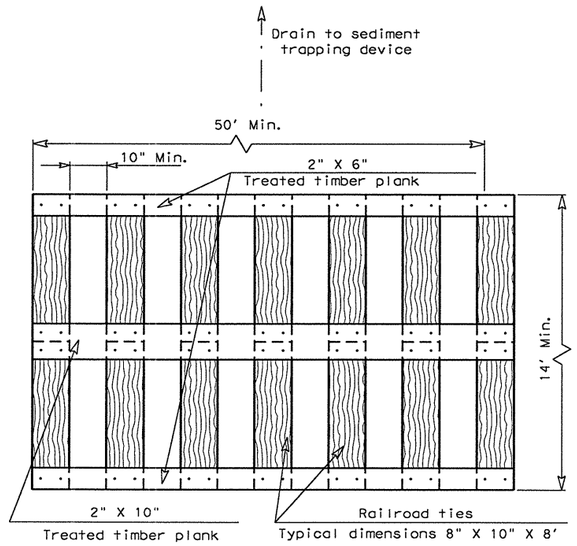

PLAN

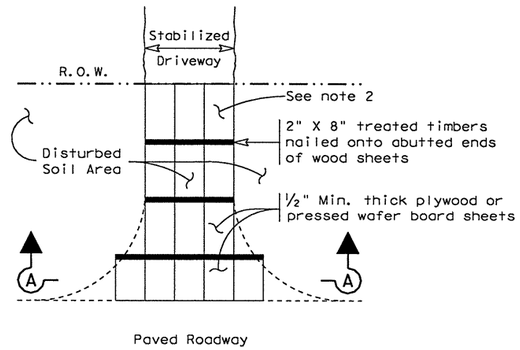

PLAN

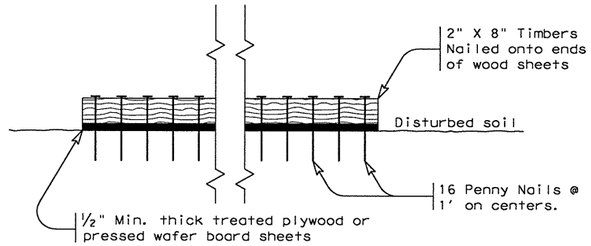

SECTION A-A

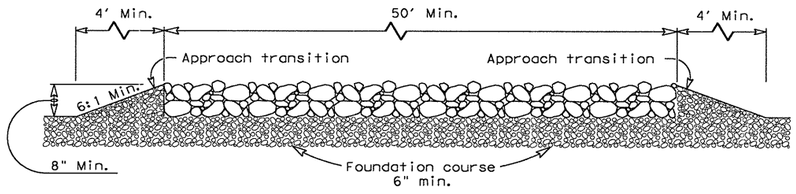

PROFILE

CONSTRUCTION EXIT (TYPE 1)

GENERAL NOTES

1. The length of the type 1 construction exit shall be as indicated on the plans, but not less than 50'.
2. The coarse aggregate should be open graded with a size of 4" to 8".
3. The approach transitions should be no steeper than 6:1 and constructed as directed by the Engineer.
4. The construction exit foundation course shall be flexible base, bituminous concrete, portland cement concrete or other material as approved by the Engineer.
5. The construction exit shall be graded to allow drainage to a sediment trapping device.
6. The guidelines shown hereon are suggestions only and may be modified by the Engineer.

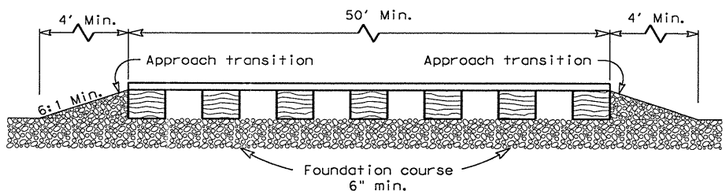

PROFILE

CONSTRUCTION EXIT (TYPE 2)

GENERAL NOTES

1. The length of the type 2 construction exit shall be as indicated on the plans, but not less than 50'.
2. The treated timber planks shall be attached to the railroad ties with ½"x 6" min. lag bolts. Other fasteners may be used as approved by the Engineer.
3. The treated timber planks shall be #2 grade min., and should be free from large and loose knots.
4. The approach transitions shall be no steeper than 6:1 and constructed as directed by the Engineer.
5. The construction exit foundation course shall be flexible base, bituminous concrete, portland cement concrete or other material as approved by the Engineer.
6. The construction exit should be graded to allow drainage to a sediment trapping device.
7. The guidelines shown hereon are suggestions only and may be modified by the Engineer.

CONSTRUCTION EXIT (TYPE 3)

GENERAL NOTES

1. The length of the type 3 construction exit shall be as shown on the plans, or as directed by the Engineer.
2. The type 3 construction exit may be constructed from open graded crushed stone with a size of two to four inches spread a min. of 4" thick to the limits shown on the plans.
3. The treated timber planks shall be #2 grade min., and should be free from large and loose knots.
4. The guidelines shown hereon are suggestions only and may be modified by the Engineer.

Texas Department of Transportation
Design Division (Roadway)

TEMPORARY EROSION, SEDIMENT AND WATER POLLUTION CONTROL MEASURES

CONSTRUCTION EXITS

EC(3)-93

FILE: EC393.DGN	DN: HEJ	CK: HEJ	DW: BCD	CK:	
©TxDOT JUNE 1993	DISTRICT	FEDERAL AID PROJECT			SHEET
REVISIONS	AUS	CC 337-1-29			258
	COUNTY		CONTROL	SECT	JOB	HIGHWAY
	WILLIAMSON		0337	01	029	SH 29

...\erosion\ec393.dgn 09/21/2004 10:13:24 AM

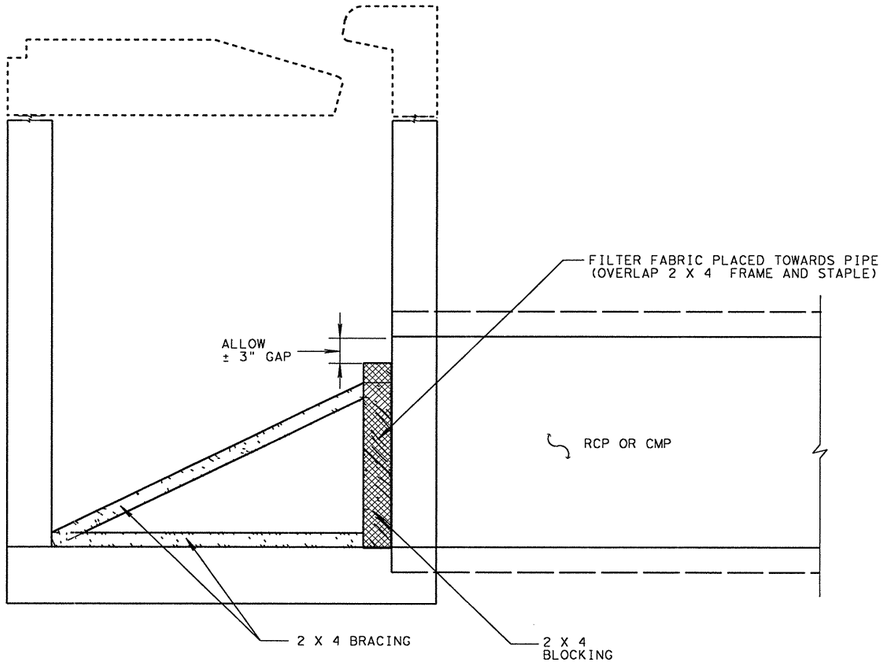

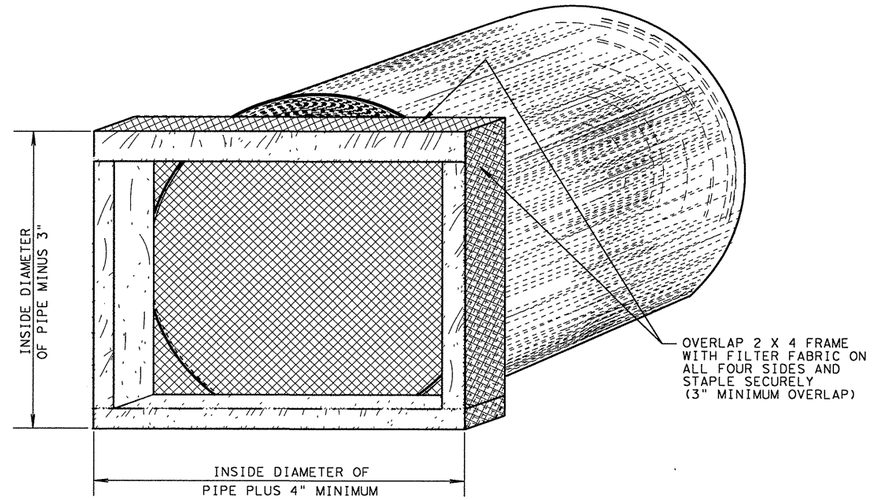

GENERAL NOTES:

"STORM INLET SEDIMENT TRAPS" SHALL BE PLACED IN ALL PROPOSED AND EXISTING CURB INLETS AND DROP INLETS SHOWN ON THE PLANS OR UNLESS OTHERWISE DIRECTED BY THE ENGINEER.

THE LATERAL BRACING SHALL BE PLACED IN A MANNER AS TO ADEQUATELY SECURE THE FILTER FRAME TO THE SIDE OF THE INLET, INSURING THE PROPER FUNCTION OF THE SEDIMENT TRAP.

FILTER FABRIC MAY BE IDENTICAL TO THAT SPECIFIED IN THE BID ITEM "TEMPORARY SEDIMENT CONTROL FENCE." OTHER MATERIAL MAY BE USED UPON APPROVAL OF THE ENGINEER.

THE "STORM INLET SEDIMENT TRAP" SHALL BE INSTALLED AT THE EARLIEST TIME POSSIBLE DURING CONSTRUCTION AS DESCRIBED IN THE SW3P OR AS DIRECTED BY THE ENGINEER.

THE CONTRACTOR WILL BE REQUIRED TO PERFORM PERIODIC MAINTENANCE OF THE SEDIMENT TRAP AND REMOVE ACCUMULATED SILT AS DIRECTED BY THE ENGINEER.

"STORM INLET SEDIMENT TRAP" SHALL REMAIN IN PLACE UNTIL VEGETATION IS ESTABLISHED AS DETERMINED SOLELY BY THE ENGINEER.

PAYMENT FOR MATERAILS, INSTALLATION, REMOVAL OF ACCUMULATED SILT & PERIODIC MAINTENANCE OF THE "STORM INLET SEDIMENT TRAP" SHALL BE SUBSIDIARY TO BID ITEM 465.

STORM INLET SEDIMENT TRAP DETAILS

AUSTIN DISTRICT

© 1998 TxDOT

ORIGINAL DRAWING:	sedtrape.dgn	FED.RD. DIV.NO.	PROJECT NO.			SHEET NO.
DATE	REVISIONS	6	CC 337-1-29			29
10/98	District Update	STATE	STATE DIST.NO.	COUNTY		
		TEXAS	AUS	WILLIAMSON		
		CONT.	SECT.	JOB	HIGHWAY NO.	
		0337	01	029	SH 29	

...\erosion\sedtrape.dgn 09/21/2004 10:13:25 AM

S:\ACAD\38903C\DGN-2\C-PP-0-E.dw ayout1, 10/6/2004 10:22:58 AM, giesekelf, \\AUSSVR1\AUSPR05PCL

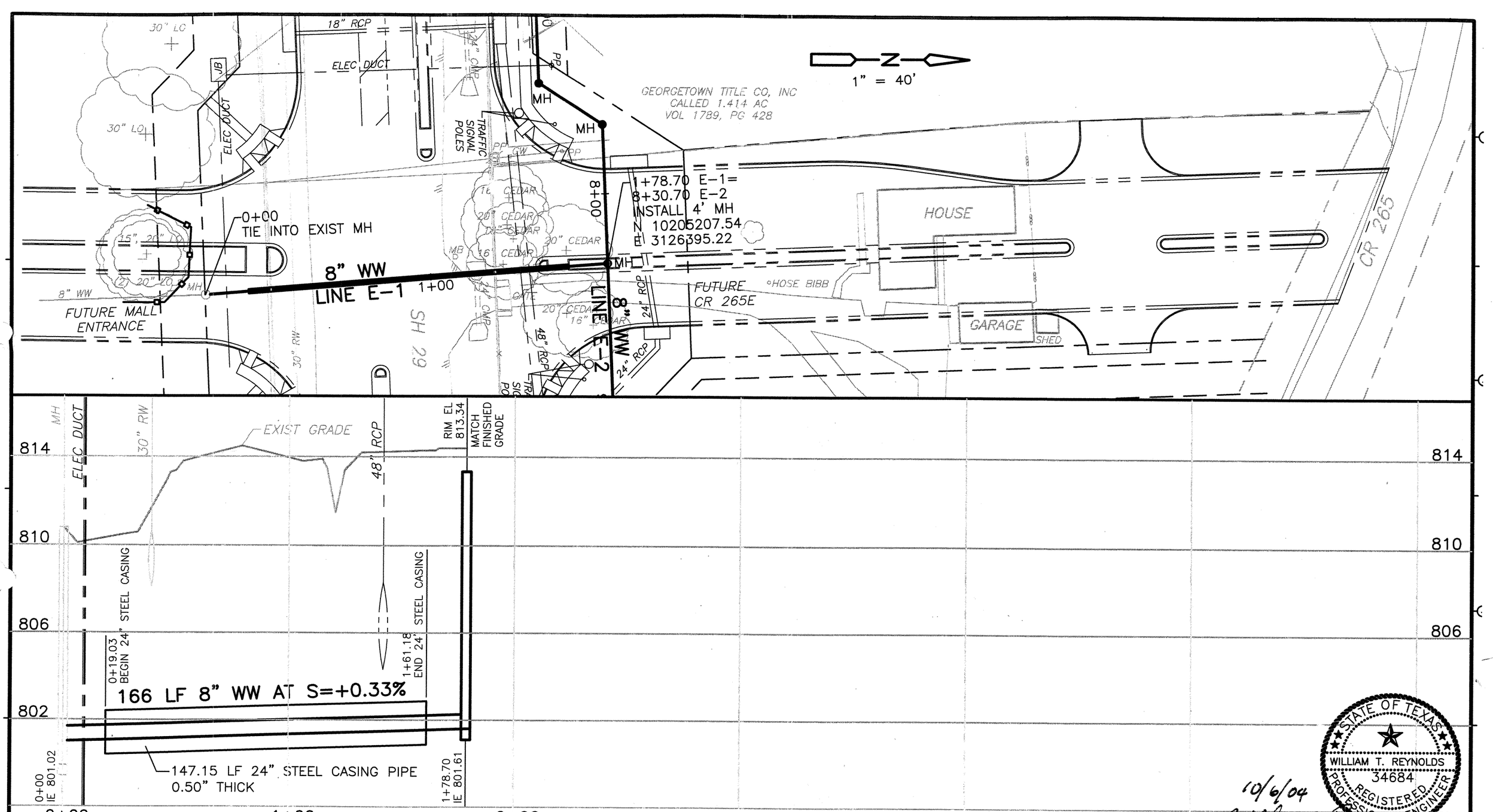

REV No	DATE	DRWN	CHKD	REMARKS

DESIGNED BY: REYNOLDS
DRAWN BY: TG
SHEET CHK'D BY: REYNOLDS
CROSS CHK'D BY: WOELKE
DATE: OCTOBER 2004

CDM Camp Dresser & McKee Inc.
consulting engineering construction operations

STATE OF TEXAS
WILLIAM T. REYNOLDS
34684
REGISTERED PROFESSIONAL ENGINEER
10/6/04

CITY OF GEORGETOWN, TEXAS
HWY 29 WASTEWATER INTERCEPTOR

LINE E-1 PLAN & PROFILE 0+00 TO END

PROJECT No 38903C\DGN-2
FILE NAME: C-PP-0-E

WW-1

SHEET No 230

X-17BORD, X-SITE

S:\ACAD\38903C\DGN-2\C-PP-0I ng, Layout1, 9/20/2004 7:57:34 AM, gieseketf, \\AUSSVR1\AUSPR05PCL

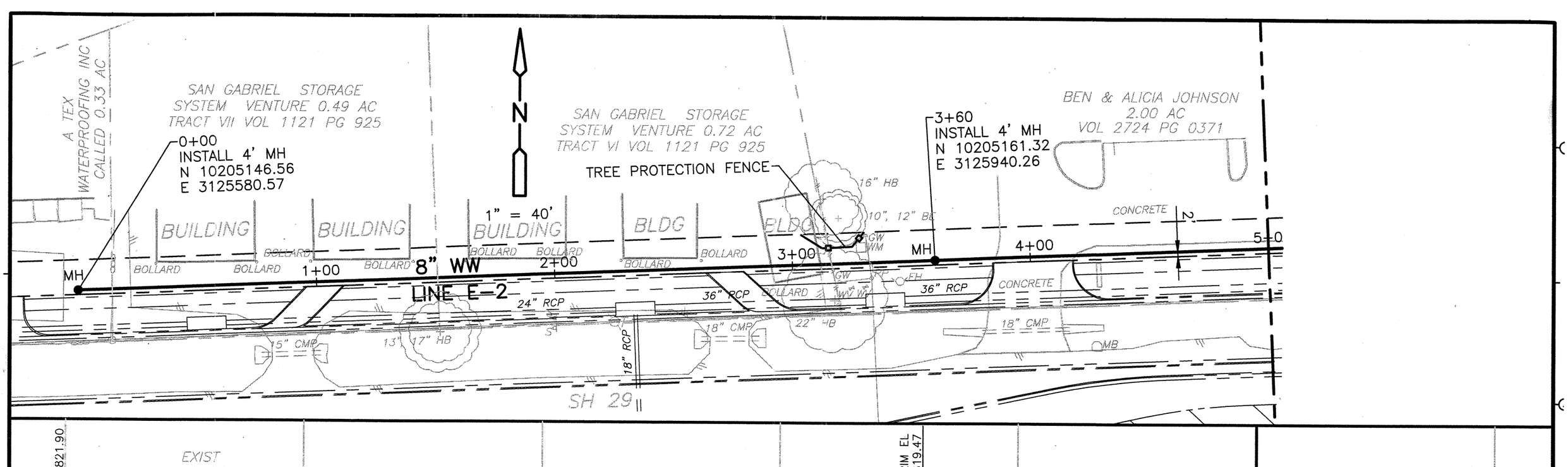

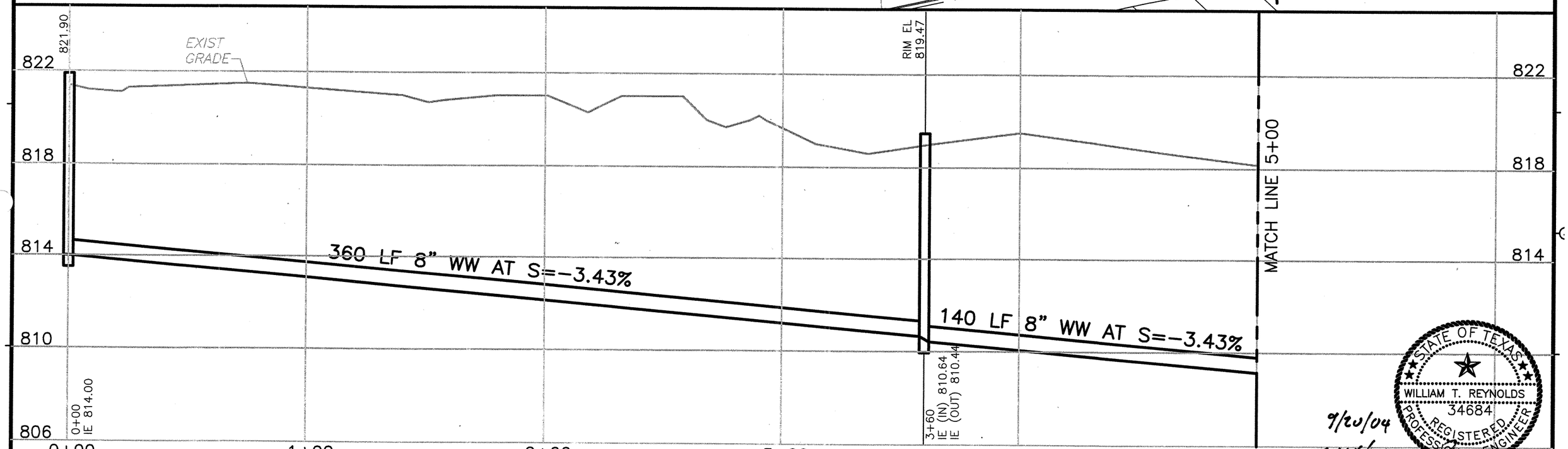

REV No	DATE	DRWN	CHKD	REMARKS

DESIGNED BY: REYNOLDS
DRAWN BY: TG
SHEET CHK'D BY: REYNOLDS
CROSS CHK'D BY: WOELKE
DATE: SEPTEMBER 2004

CDM Camp Dresser & McKee Inc.
consulting engineering construction operations

STATE OF TEXAS
WILLIAM T. REYNOLDS
34684
REGISTERED PROFESSIONAL ENGINEER
9/20/04

CITY OF GEORGETOWN, TEXAS
HWY 29 WASTEWATER INTERCEPTOR

LINE E-2 PLAN & PROFILE 0+00 TO 5+00

PROJECT No 38903C\DGN-2
FILE NAME: C-PP-0E2

WW-2

SHEET No 22

X-17BORD, X-SITE

S:\ACAD\38903C\DGN-2\C-PP-5E2.dgn Layout1, 10/6/2004 2:57:32 PM, gieseketf, \\AUSSVR1\AUSPR05PCL

8+30.70 LINE E-2=
1+78.70 LINE E-1
INSTALL 4' MH
N 10205207.54
E 3126395.22

7+68.90
INSTALL 4' DROP MH
N 10205205.00
E 3126333.47

7+35.15
INSTALL 4' DROP MH
N 10205176.70
E 3126315.10

9+04.10
INSTALL 4' MH
N 10205210.55
E 3126468.56

9+21.82
INSTALL 4' MH
N 10205198.54
E 3126481.59

10+09.33
INSTALL 4' MH
N 10205202.13
E 3126569.03

BEN & ALICIA JOHNSON
2.00 AC
VOL 2724 PG 0371

GEORGETOWN TITLE CO, INC
CALLED 1.414 AC
VOL 1789, PG 428

JUDY WOLF HINDELANG JANE WOLF ROBERTSON JAY L. WOLF, JR. IVA WOLF MCLACHLAN JAMES DAVID WOLF
CALLED 1.78 AC
DOC # 2003063284
O.P.R.W.C.T.

JUDY WOLF HINDELANG JANE WOLF ROBERTSON JAY L. WOLF, JR. IVA WOLF MCLACHLAN
CALLED 1.89 AC
DOC # 2003124147
O.P.R.W.C.T.

FUTURE CR 265E

1" = 40'

LINE E-2

8" WW

TRAFFIC SIGNAL POLES

TREE PROTECTION FENCE

SH 29

EXIST GRADE

MATCH LINE 5+00

235 LF 8" WW AT S=-3.43%

34 LF 8" WW AT S=-0.33%

62 LF 8" WW AT S=-0.33%

73 LF 8" WW AT S=+1.58%

18 LF 8" WW AT S=+1.58%

88 LF 8" WW AT S=+1.58%

7+35.15 IE (IN) 806.94 IE (OUT) 802.80

7+68.90 IE (OUT) 802.49 IE (IN) 802.69

8+30.70 IE (OUT) 801.61 IE (IN) 802.29

9+04.10 IE (OUT) 803.45 IE (IN) 803.65

9+21.82 IE (OUT) 803.93 IE (IN) 804.13

10+09.33 IE 805.52

RIM EL 815.37 MATCH FINISHED GRADE

RIM EL 815.47 MATCH FINISHED GRADE

RIM EL 813.34 MATCH FINISHED GRADE

RIM EL 813.57

RIM EL 813.35

RIM EL 812.07

REV No	DATE	DRWN	CHKD	REMARKS

DESIGNED BY: REYNOLDS
DRAWN BY: TG
SHEET CHK'D BY: REYNOLDS
CROSS CHK'D BY: WOELKE
DATE: OCTOBER 2004

CDM Camp Dresser & McKee Inc.
consulting engineering construction operations

STATE OF TEXAS
WILLIAM T. REYNOLDS
34684
REGISTERED PROFESSIONAL ENGINEER
10/6/04

CITY OF GEORGETOWN, TEXAS
HWY 29 WASTEWATER INTERCEPTOR

LINE E-2 PLAN & PROFILE 5+00 TO END

PROJECT No 38903C\DGN-2
FILE NAME: C-PP-5E2

WW-3

SHEET No 22

X-17BORD, X-SITE

S:\ACAD\38903C\DGN-2\C-PP-0- q, Layout1, 9/20/2004 7:58:49 AM, giesekef, \\AUSSVR1\AUSPR05PCL

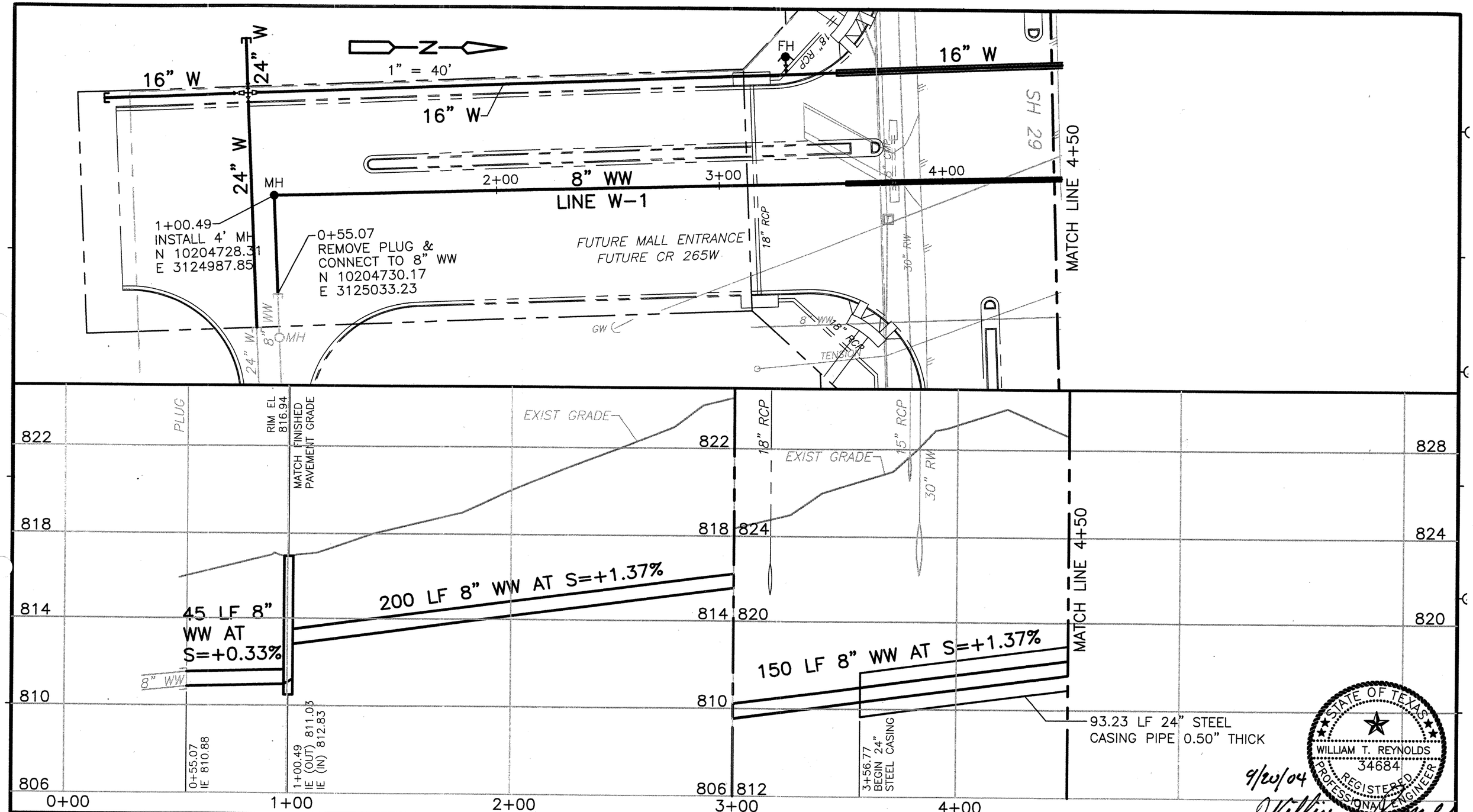

REV No	DATE	DRWN	CHKD	REMARKS

X-17BORD, X-SITE

DESIGNED BY: REYNOLDS
DRAWN BY: TG
SHEET CHK'D BY: REYNOLDS
CROSS CHK'D BY: WOELKE
DATE: SEPTEMBER 2004

CDM Camp Dresser & McKee Inc.
consulting engineering construction operations

CITY OF GEORGETOWN, TEXAS
HWY 29 WASTEWATER INTERCEPTOR

LINE W-1 PLAN & PROFILE 0+00 TO 4+50

STATE OF TEXAS
WILLIAM T. REYNOLDS
34684
REGISTERED PROFESSIONAL ENGINEER
9/20/04

PROJECT No 38903C\DGN-2
FILE NAME: C-PP-0-W

WW-4

SHEET No 223

S:\ACAD\38903C\DGN-2\C-PP-0WB.dwg ' ayout1, 10/6/2004 10:42:43 AM, giesekef, \\AUSSVR1\AUSPR05\PCL

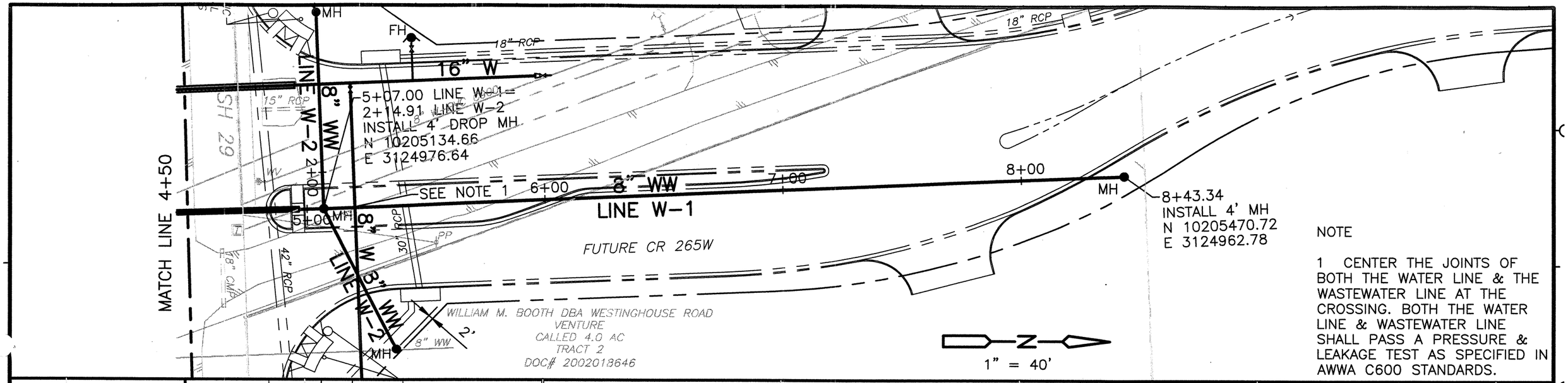

NOTE

1 CENTER THE JOINTS OF BOTH THE WATER LINE & THE WASTEWATER LINE AT THE CROSSING. BOTH THE WATER LINE & WASTEWATER LINE SHALL PASS A PRESSURE & LEAKAGE TEST AS SPECIFIED IN AWWA C600 STANDARDS.

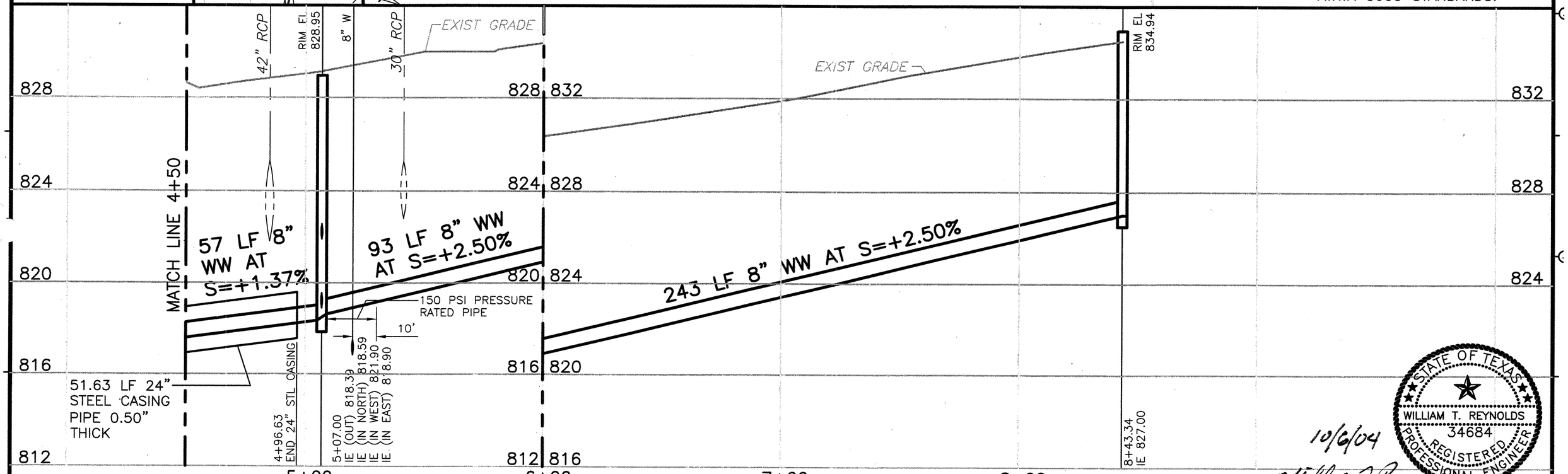

STATE OF TEXAS
WILLIAM T. REYNOLDS
34684
REGISTERED PROFESSIONAL ENGINEER

10/6/04

REV No	DATE	DRWN	CHKD	REMARKS

DESIGNED BY: REYNOLDS
DRAWN BY: TG
SHEET CHK'D BY: REYNOLDS
CROSS CHK'D BY: WOELKE
DATE: OCTOBER 2004

CDM Camp Dresser & McKee Inc.
consulting engineering construction operations

CITY OF GEORGETOWN, TEXAS
HWY 29 WASTEWATER INTERCEPTOR

LINE W-1 PLAN & PROFILE 4+50 TO END

PROJECT No 38903C\DGN-2
FILE NAME: C-PP-0WB

WW-5

SHEET No 224

X-17BORD, X-SITE

S:\ACAD\38903C\DGN-2\C-PP-0W2.dwg ' -vout1, 10/6/2004 10:54:24 AM, gieseketf, \\AUSSVR1\AUSPR05PCL

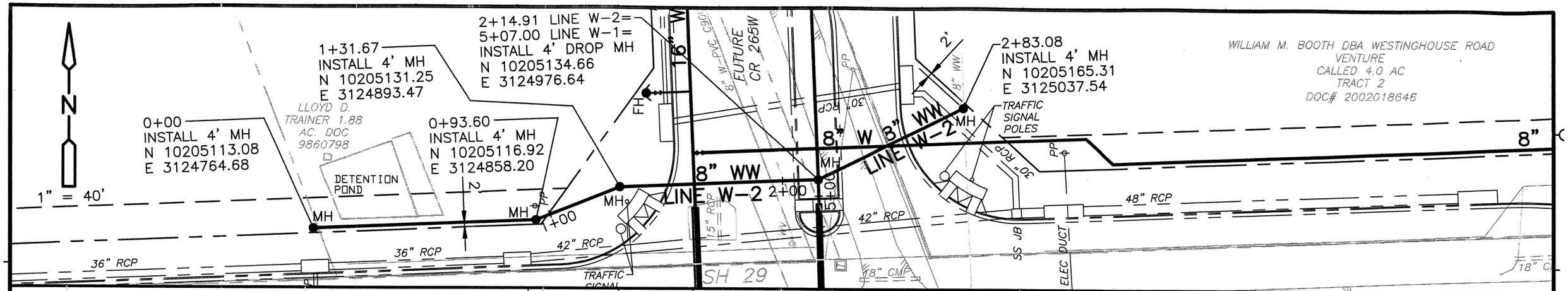

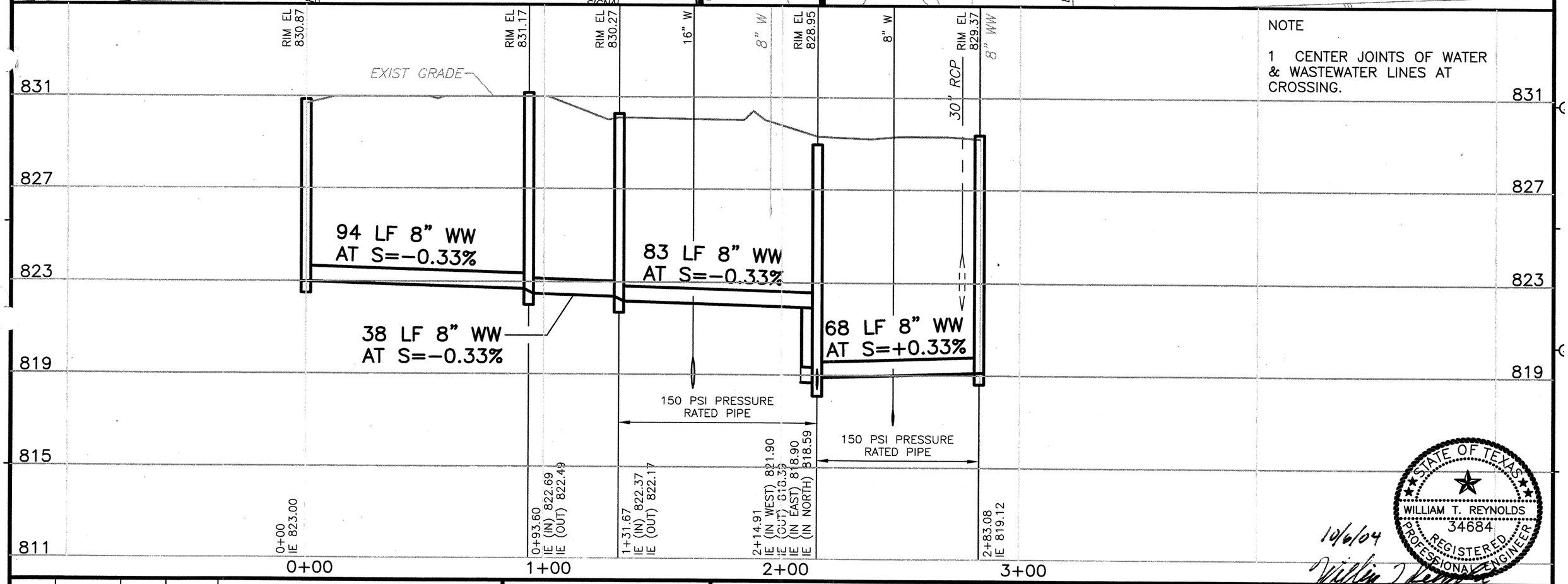

NOTE

1 CENTER JOINTS OF WATER & WASTEWATER LINES AT CROSSING.

STATE OF TEXAS
WILLIAM T. REYNOLDS
34684
REGISTERED PROFESSIONAL ENGINEER

10/6/04

REV No	DATE	DRWN	CHKD	REMARKS

DESIGNED BY: REYNOLDS
DRAWN BY: TG
SHEET CHK'D BY: REYNOLDS
CROSS CHK'D BY: WOELKE
DATE: OCTOBER 2004

CDM Camp Dresser & McKee Inc.
consulting engineering construction operations

CITY OF GEORGETOWN, TEXAS
HWY 29 WASTEWATER INTERCEPTOR

LINE W-2 PLAN & PROFILE 0+00 TO END

PROJECT No 38903C\DGN-2
FILE NAME: C-PP-0W2

WW-6

SHEET No 225

X-17BORD, X-SITE

S:\ACADI38903C\DGN-2IC-PP-01\ wg, Layout1, 9/20/2004 8:02:04 AM, gieseketf, \\AUSSVR1\AUSPR05PCL

20 LF 24" W-DI RESTRAINED JOINT PIPE

24" W

16" W

1" = 40'

3.05'

1+00

2+00

16" W

3+00

FH

18" RCP

4+00 16" W

D

SH 29

3+48
INSTALL FH
N 10204957.18
E 3124931.81

N 10204652.06
E 3124944.33

24" W

1+07.05
INSTALL 24" x 24" CROSS
(2) 24" x 16" RED
(2) 24" GV
16" GV
24" PLUG WITH THRUST BLOCK
65 LF 16" DI RESTRAINED JOINT PIPE
16" PLUG
N 10204716.40
E 3124941.69

MH

8" WW
LINE W-1

0+00
REMOVE PLUG
CONNECT TO 24" W
N 10204720.79
E 3125048.65

FUTURE MALL ENTRANCE
FUTURE CR 265W

18" RCP

30" RW

CL CI

MATCH LINE 4+50

8" WW

18" RCP

TENSION

GW

24" W

8" MH

PLUG

EXIST GRADE

FUTURE TOP OF CURB

822 828

818 824

814 820

810 812

806

18" RCP

30" RW

EXIST GRADE

107 LF 24" W
AT S=0.00%

193 LF 16" W AT S=+2.45%

71 LF 16" W
AT S=+2.45%

79 LF 16" W
AT S=+1.15%

MATCH LINE 4+50

79.21 LF 30" STEEL CASING PIPE
0.50" THICK. 16" W TO BE
RESTRAINED INSIDE CASING PIPE.

24" W

0+00
IE 810.20

1+07.05
IE 810.20

3+48
FH

3+70.79
IE 816.65
BEGIN 30"
STEEL CASING

0+00 1+00 2+00 3+00 4+00

STATE OF TEXAS
WILLIAM T. REYNOLDS
34684
REGISTERED
PROFESSIONAL ENGINEER

9/20/04

REV No	DATE	DRWN	CHKD	REMARKS

DESIGNED BY: REYNOLDS
DRAWN BY: TG
SHEET CHK'D BY: REYNOLDS
CROSS CHK'D BY: WOELKE
DATE: SEPTEMBER 2004

CDM Camp Dresser & McKee Inc.
consulting engineering construction operations

CITY OF GEORGETOWN, TEXAS
HWY 29 WASTEWATER INTERCEPTOR

16" W PLAN & PROFILE 0+00 TO 4+50

PROJECT No 38903C\DGN-2
FILE NAME: C-PP-0WL

WW-7

SHEET No 226

X-17BORD_X-SITE

S:\ACAD\38903C\DGN-2\C-PP-4WL.dwg, Layout1, 10/6/2004 10:44:05 AM, gieseketf, \\AUSSVR1\AUSPR05PCL

EXISTING 8" W–PVC C900 TO BE REMOVED & DISPOSED OF AS SHOWN IN AN ENVIRONMENTALLY SOUND MANNER.

MATCH LINE 4+50

MH

FH

18" RCP

16" W

5+00

LINE W–2 8" WW

15" RCP

8" W–PVC C900

5+63
INSTALL FH
N 10205172.00
E 3124923.00

6+21.06
INSTALL 16" x 8" RED
8" GV
CONNECT TO 8" W
N 10205229.98
E 3124920.62

8" WW

LINE W–1

5+36.65
INSTALL 16" x 16" x 8" TEE
N 10205172.00
E 3124923.00

FUTURE CR 265W

30" RCP

42" RCP

18" CMP

LINE W–2 8" WW

WILLIAM M. BOOTH DBA WESTINGHOUSE ROAD VENTURE
CALLED 4.0 AC
TRACT 2
DOC# 2002018646

1" = 40'

828

824

820

816

812

EXIST GRADE

63 LF 16" W AT S=+1.15%

45 LF 16" W AT S=+7.00%

51 LF 16" W AT S=+10.30%

8" W

5+13.29 END 30" STEEL CASING

63.29 LF 30" STEEL CASING PIPE 0.50" THICK. 16" W TO BE RESTRAINED INSIDE CASING PIPE.

5+25 IE 818.42

5+36.65 16"x16"x8" TEE

5+63 FH

5+70 IE 821.57

6+21.06 IE 826.83

5+00

6+00

NOTE

1 CENTER JOINTS OF WATER & WASTEWATER LINES AT CROSSING.

STATE OF TEXAS
WILLIAM T. REYNOLDS
34684
REGISTERED PROFESSIONAL ENGINEER

10/6/04

REV No	DATE	DRWN	CHKD	REMARKS

DESIGNED BY: REYNOLDS
DRAWN BY: TG
SHEET CHK'D BY: REYNOLDS
CROSS CHK'D BY: WOELKE
DATE: OCTOBER 2004

CDM Camp Dresser & McKee Inc.
consulting engineering construction operations

CITY OF GEORGETOWN, TEXAS
HWY 29 WASTEWATER INTERCEPTOR

16" W PLAN & PROFILE 4+50 TO END

PROJECT No 38903C\DGN-2
FILE NAME: C–PP–4WL

WW-8

SHEET No 22

S:\ACAD\38903C\DGN-2\C-17BORD, X-SITE

S:\ACAD\38903C\DGN-2\C-PP0WL2.dwg vout1, 10/6/2004 12:12:49 PM, giesekelf, \\AUSSVR1\AUSPR05PCL

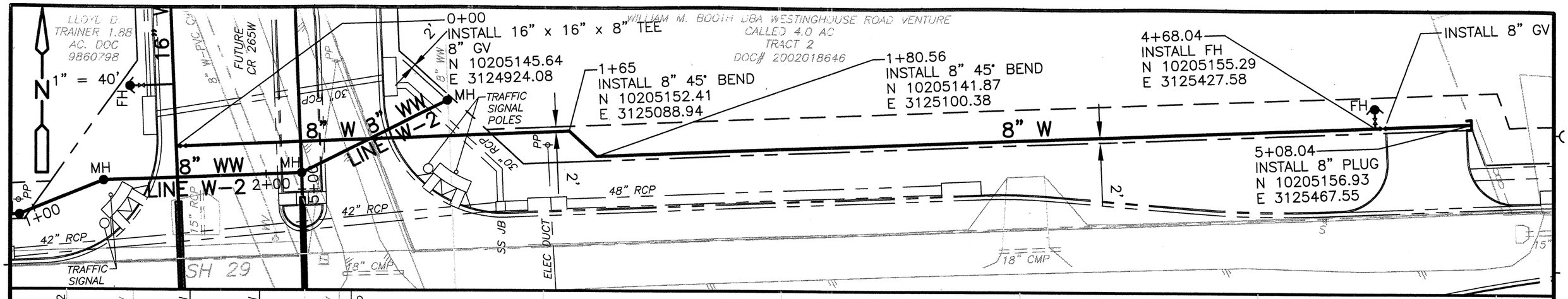

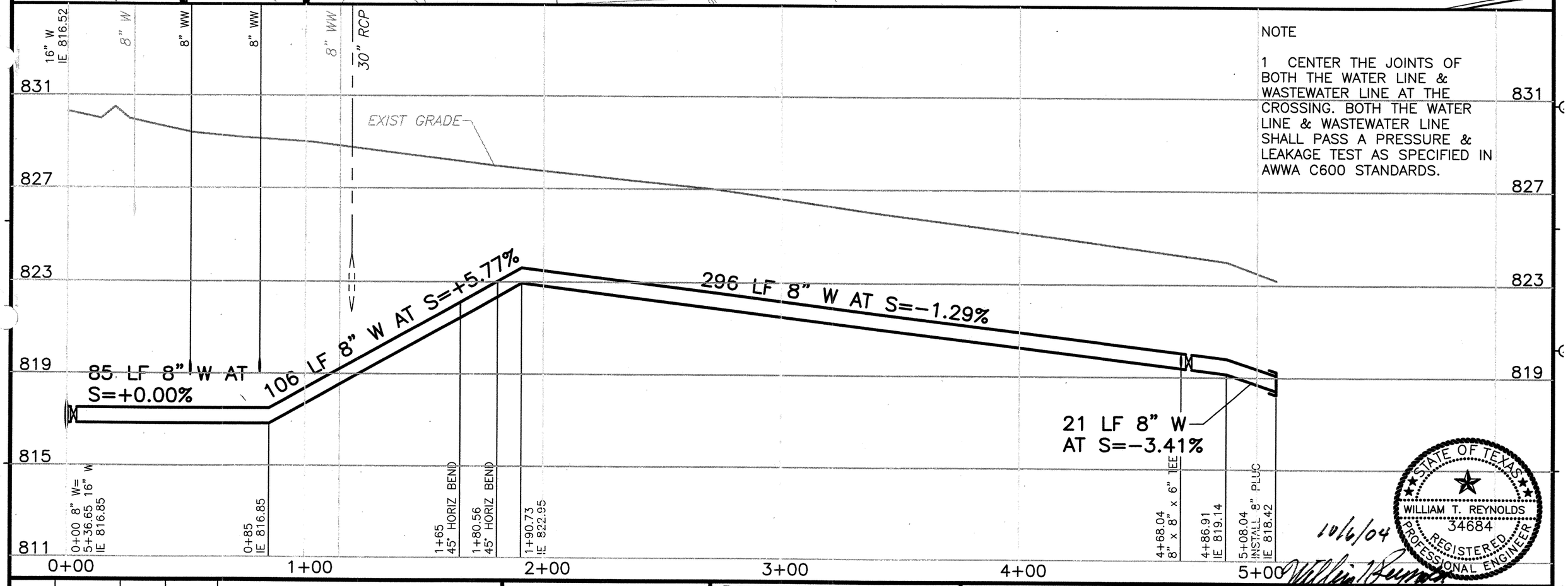

NOTE

1 CENTER THE JOINTS OF BOTH THE WATER LINE & WASTEWATER LINE AT THE CROSSING. BOTH THE WATER LINE & WASTEWATER LINE SHALL PASS A PRESSURE & LEAKAGE TEST AS SPECIFIED IN AWWA C600 STANDARDS.

STATE OF TEXAS
WILLIAM T. REYNOLDS
34684
REGISTERED
PROFESSIONAL ENGINEER
10/6/04

REV No	DATE	DRWN	CHKD	REMARKS

DESIGNED BY: REYNOLDS
DRAWN BY: TG
SHEET CHK'D BY: REYNOLDS
CROSS CHK'D BY: WOELKE
DATE: OCTOBER 2004

CDM Camp Dresser & McKee Inc.
consulting engineering construction operations

CITY OF GEORGETOWN, TEXAS
HWY 29 WASTEWATER INTERCEPTOR

8" W PLAN & PROFILE 0+00 TO END

PROJECT No 38903C\DGN-2
FILE NAME: C-PP0WL2

WW-9

SHEET No 228

X-17BORD, X-SITE

S:\ACAD\38903C\DGN-2\C-DET-...g, Layout1, 9/20/2004 8:05:08 AM, gieseketf, \\AUSSVR1\AUSPR05PCL...
X-17BORD, X-SITE

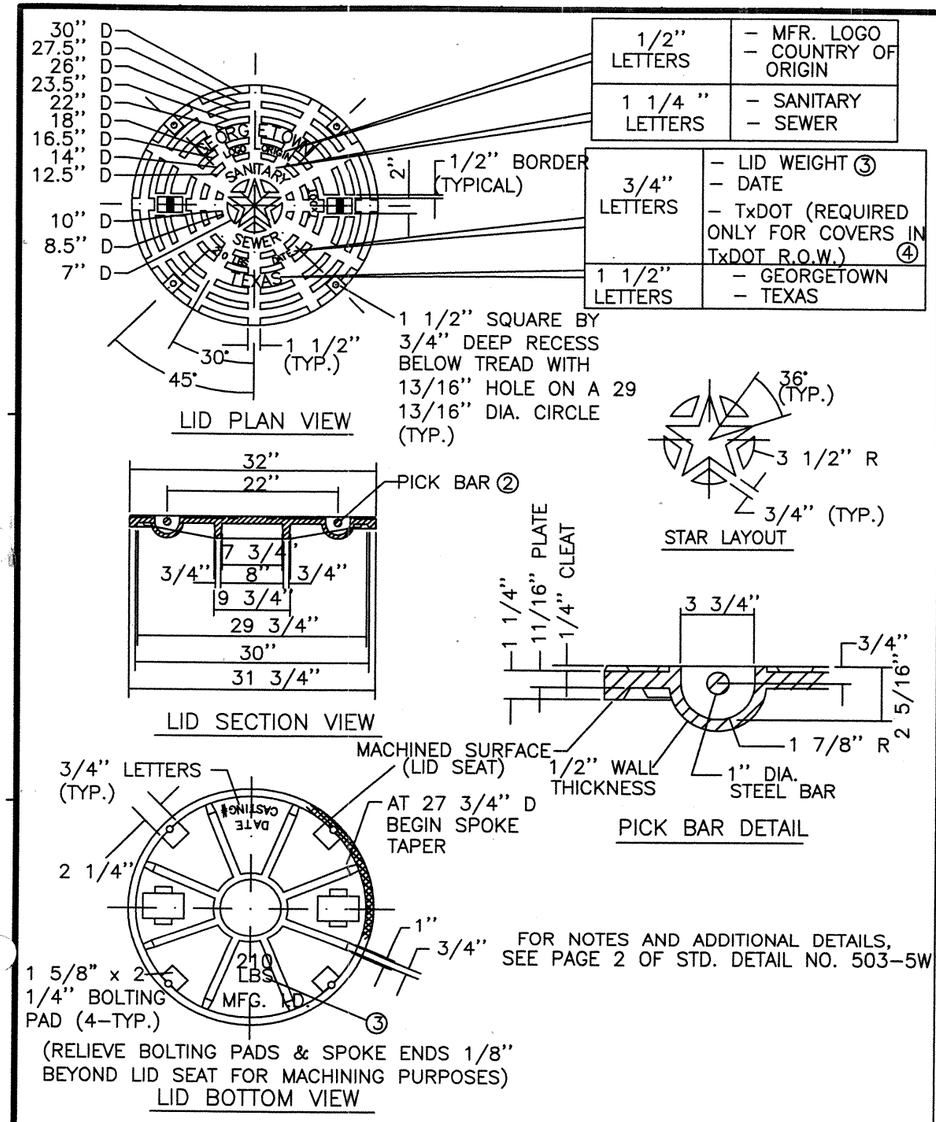

FOR NOTES AND ADDITIONAL DETAILS, SEE PAGE 2 OF STD. DETAIL NO. 503–5W

CITY OF AUSTIN WATER AND WASTEWATER UTILITY		WATERTIGHT MANHOLE RING AND 32" COVER
RECORD COPY SIGNED BY KATHI F. PAYNE	*8/18/98* ADOPTED	STANDARD NO. 503–5W 1 OF 2

DETAIL A
NTS

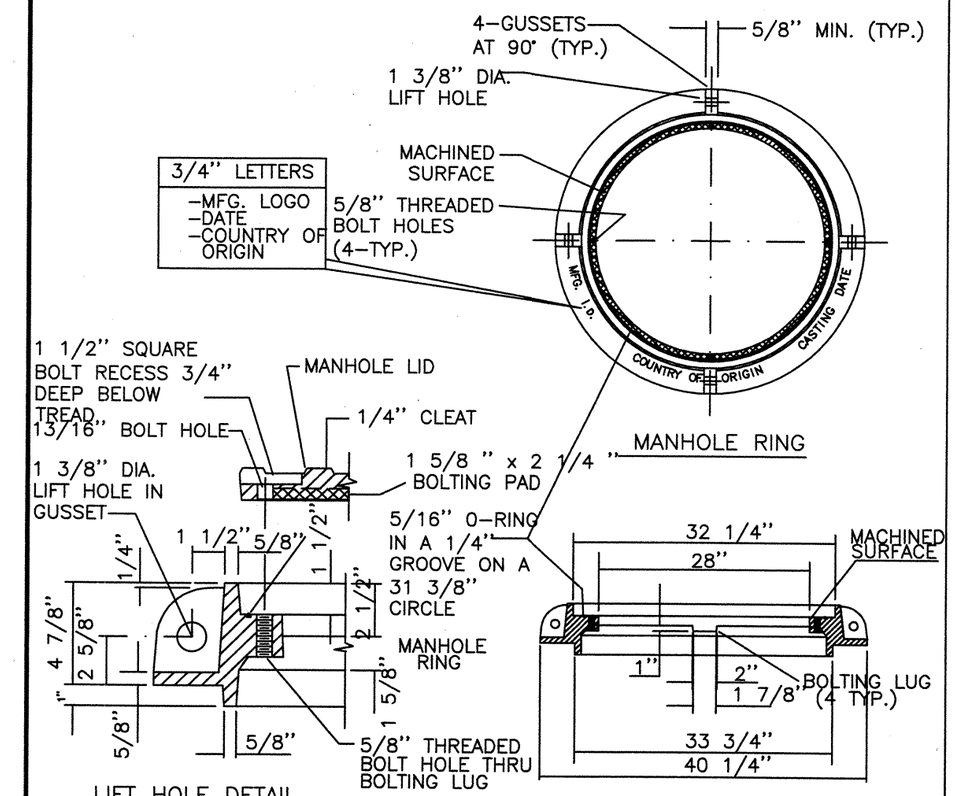

NOTES:
① ALL CORNERS AND EDGES SHALL HAVE A 1/16" MINIMUM RADIUS.
② LIDS SHALL BE CAST WITH TWO 1" DIA. STEEL PICK BARS.
③ LID WEIGHTS SHALL BE 210 LBS. FOR CAST IRON OR 175 LBS. FOR DUCTILE IRON. WEIGHT SHALL BE CAST ON BOTH TOP & BOTTOM OF LID.
④ MANUFACTURER SHALL PROVIDE INDEPENDENT TESTING LABORATORY REPORT ON 25,000 POUND (40,000 POUND FOR TxDOT R.O.W.) PROOF LOAD TEST CONDUCTED ACCORDING TO AASHTO M–306.
⑤ FILLETS SHALL BE 1/4" RADIUS UNLESS OTHERWISE SPECIFIED.
⑥ MANUFACTURER SHALL REMOVE EXCESS IRON AND MACHINE FINISH SEATING SURFACES TO NOTED DIMENSIONS.

CITY OF AUSTIN WATER AND WASTEWATER UTILITY		WATERTIGHT MANHOLE RING AND 32" COVER
RECORD COPY SIGNED BY KATHI F. PAYNE	*8/18/98* ADOPTED	STANDARD NO. 503–5W 2 OF 2

DETAIL B
NTS

STATE OF TEXAS
WILLIAM T. REYNOLDS
34684
REGISTERED PROFESSIONAL ENGINEER
9/20/04

REV No	DATE	DRWN	CHKD	REMARKS

DESIGNED BY: REYNOLDS
DRAWN BY: TG
SHEET CHK'D BY: REYNOLDS
CROSS CHK'D BY: WOELKE
DATE: SEPTEMBER 2004

CDM Camp Dresser & McKee Inc.
consulting engineering construction operations

CITY OF GEORGETOWN, TEXAS
HWY 29 WASTEWATER INTERCEPTOR
MISCELLANEOUS DETAILS I

PROJECT No 38903C\DGN-2
FILE NAME: C–DET–1

WW-10

SHEET No 229

S:\ACAD\38903C\DGN-2\C-DET-2.dwg, Layout1, 9/20/2004 8:05:36 AM, gieseketf, \\AUSSVR1\AUSPR05PCL

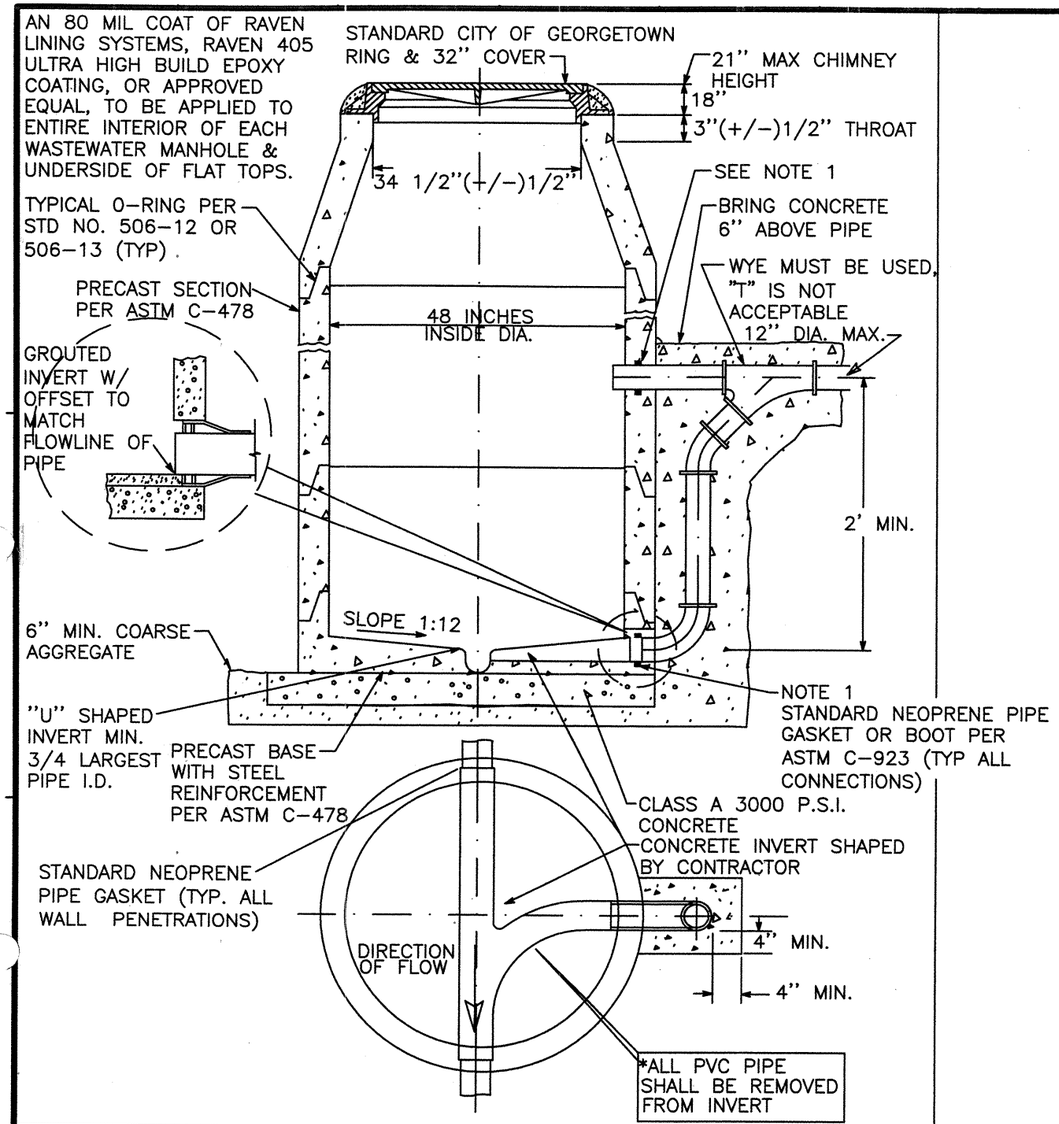

CITY OF AUSTIN WATER AND WASTEWATER UTILITY	PRECAST MANHOLE WITH DROP INLET ON PRECAST BASE	
	ADOPTED: 8-23-96	STANDARD NO. 506-8
	SCALE: N.T.S.	
APPROVED DATE	INITIAL: LLKM	

DETAIL A
NTS

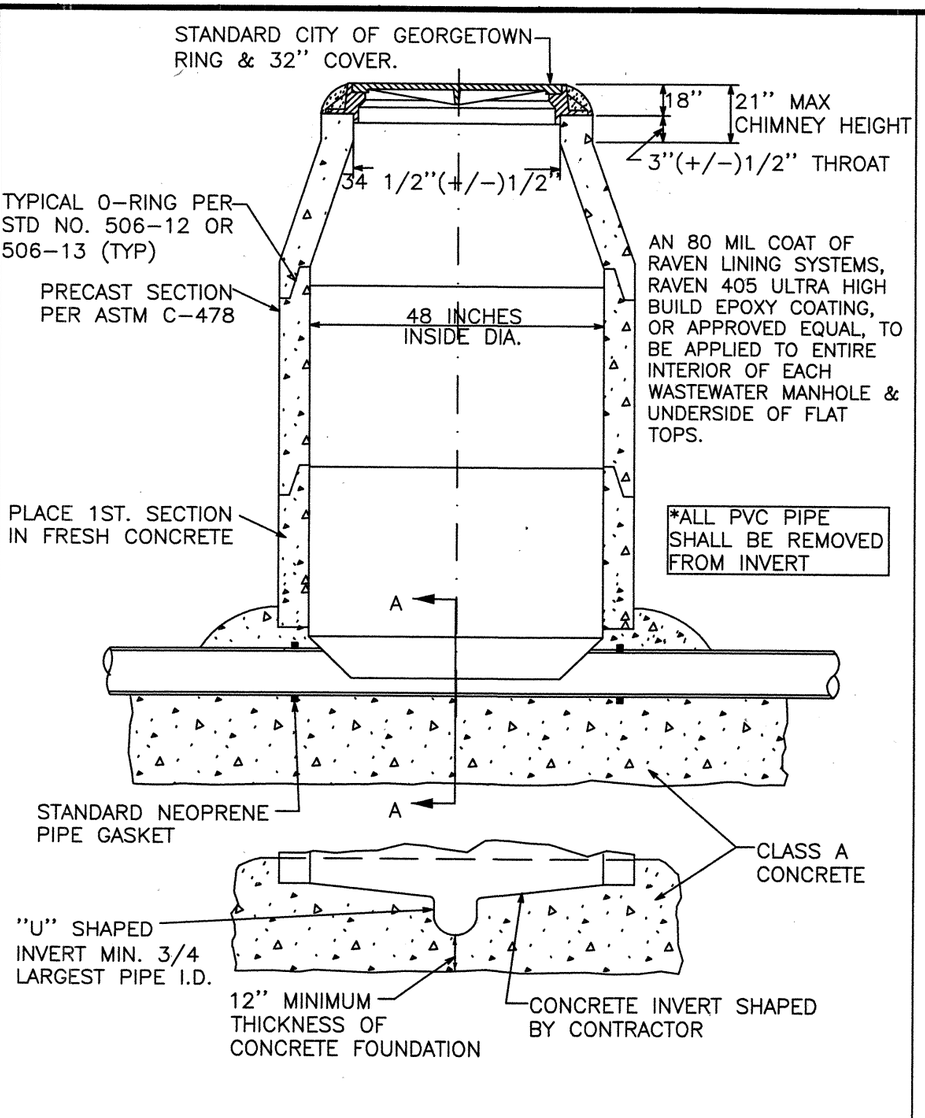

CITY OF AUSTIN WATER AND WASTEWATER UTILITY	PRECAST MANHOLE ON CAST-IN-PLACE FOUNDATION	
	ADOPTED: 8-23-96	STANDARD NO. 506-9
	SCALE: N.T.S.	
APPROVED DATE	INITIAL: LLKM	

DETAIL B
NTS

STATE OF TEXAS
WILLIAM T. REYNOLDS
34684
REGISTERED PROFESSIONAL ENGINEER
9/20/04

REV No	DATE	DRWN	CHKD	REMARKS

DESIGNED BY: REYNOLDS
DRAWN BY: TG
SHEET CHK'D BY: REYNOLDS
CROSS CHK'D BY: WOELKE
DATE: SEPTEMBER 2004

CDM Camp Dresser & McKee Inc.
consulting engineering construction operations

CITY OF GEORGETOWN, TEXAS
HWY 29 WASTEWATER INTERCEPTOR
MISCELLANEOUS DETAILS II

PROJECT No 38903C\DGN-2
FILE NAME: C-DET-2

WW-11
SHEET No 230

X-17BORD, X-SITE

S:\ACAD\38903C\DGN-2\C-DET-3, Layout1, 9/20/2004 8:06:03 AM, giesekef, \\AUSSVR1\AUSPR05PCL

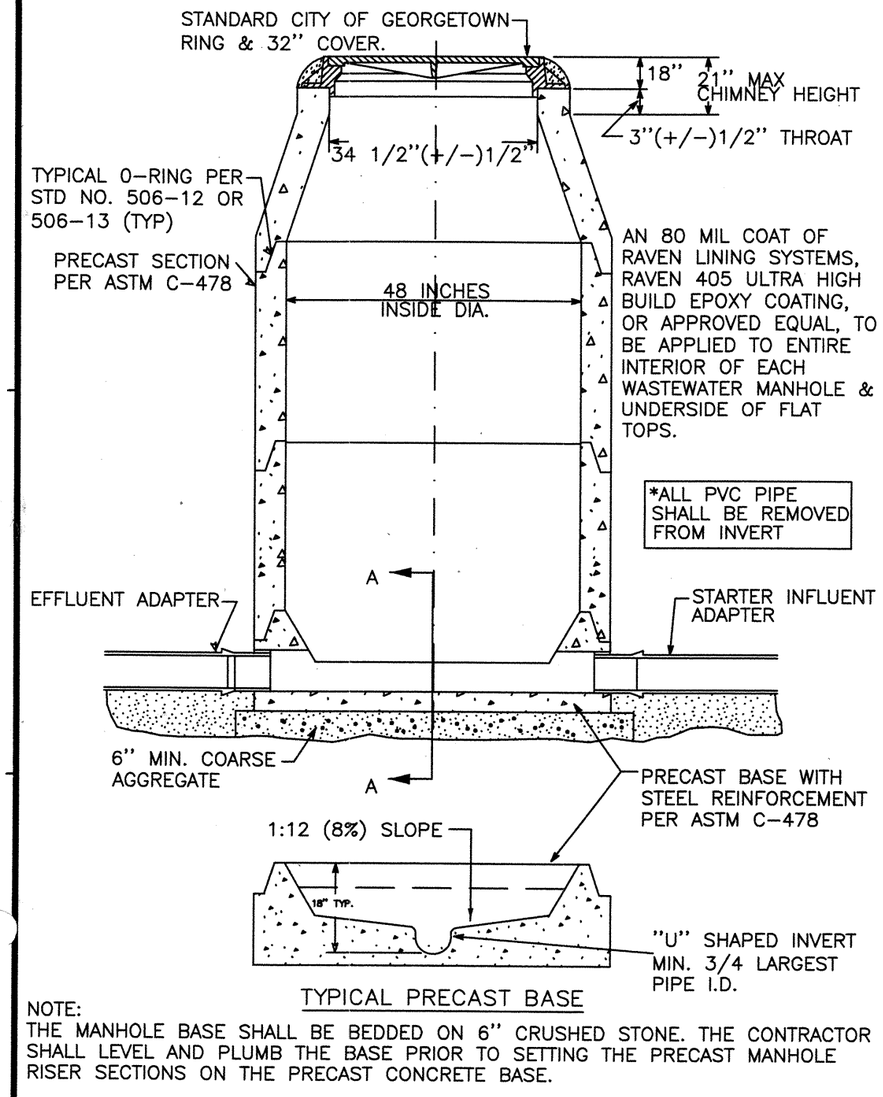

TYPICAL PRECAST BASE

NOTE:
THE MANHOLE BASE SHALL BE BEDDED ON 6" CRUSHED STONE. THE CONTRACTOR SHALL LEVEL AND PLUMB THE BASE PRIOR TO SETTING THE PRECAST MANHOLE RISER SECTIONS ON THE PRECAST CONCRETE BASE.

CITY OF AUSTIN WATER AND WASTEWATER UTILITY		WASTEWATER MANHOLE ON PRECAST BASE	
		ADOPTED: 8-23-96	STANDARD NO. 506-10
		SCALE: N.T.S.	
APPROVED	DATE	INITIAL: JC	

DETAIL A
NTS

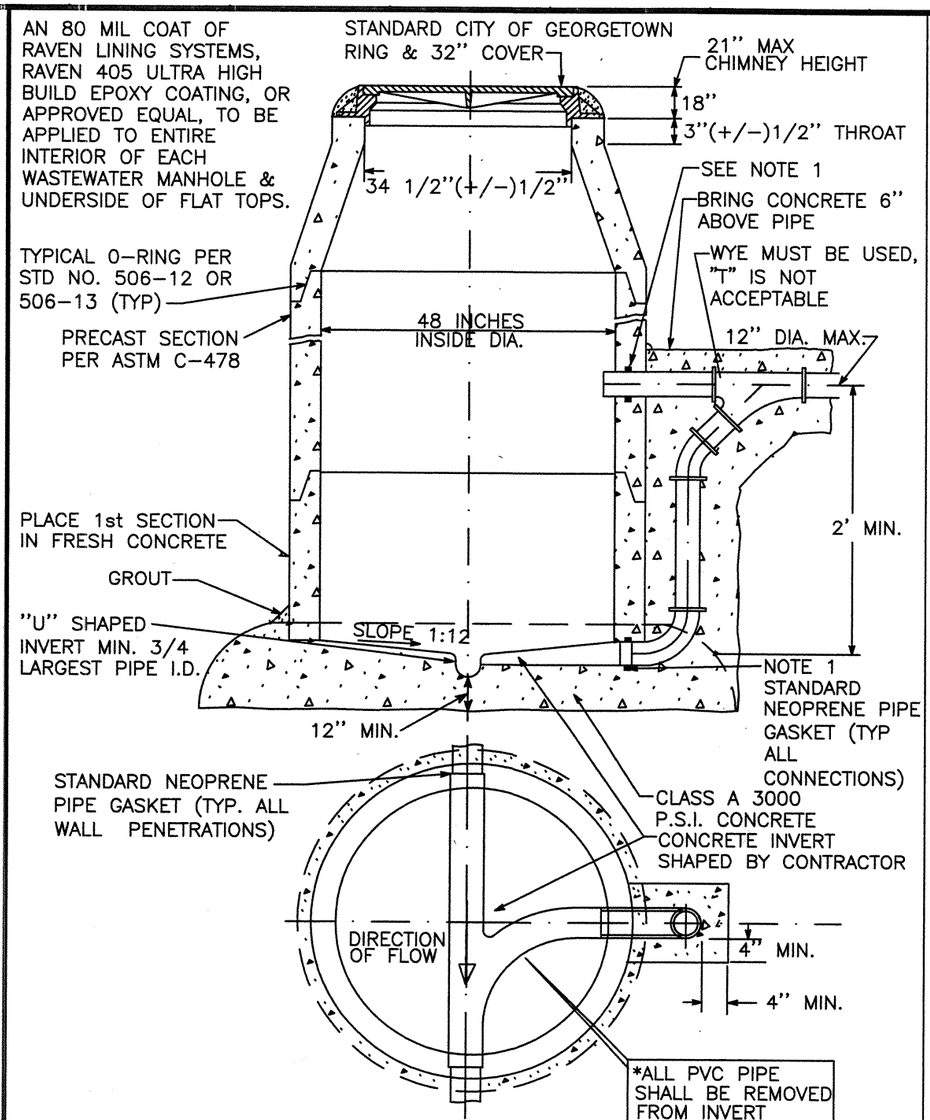

CITY OF AUSTIN WATER AND WASTEWATER UTILITY		PRECAST MANHOLE WITH DROP INLET ON CAST IN PLACE FOUNDATION	
		ADOPTED: 8-23-96	STANDARD NO. 506-7
		SCALE: N.T.S.	
APPROVED	DATE	INITIAL: LLKM	

DETAIL B
NTS

REV No	DATE	DRWN	CHKD	REMARKS

DESIGNED BY: REYNOLDS
DRAWN BY: TG
SHEET CHK'D BY: REYNOLDS
CROSS CHK'D BY: WOELKE
DATE: SEPTEMBER 2004

CDM Camp Dresser & McKee Inc.
consulting engineering construction operations

STATE OF TEXAS
WILLIAM T. REYNOLDS
34684
REGISTERED PROFESSIONAL ENGINEER
9/20/04

CITY OF GEORGETOWN, TEXAS
HWY 29 WASTEWATER INTERCEPTOR
MISCELLANEOUS DETAILS III

PROJECT No 38903C\DGN-2
FILE NAME: C-DET-3

WW-12

SHEET No 231

X-17BORD, X-SITE

S:\ACAD\38903C\DGN-2\C-DET-4.dgn, Layout1, 9/20/2004 8:06:48 AM, giesekettf, \\AUSSVR1\AUSPR05PCL

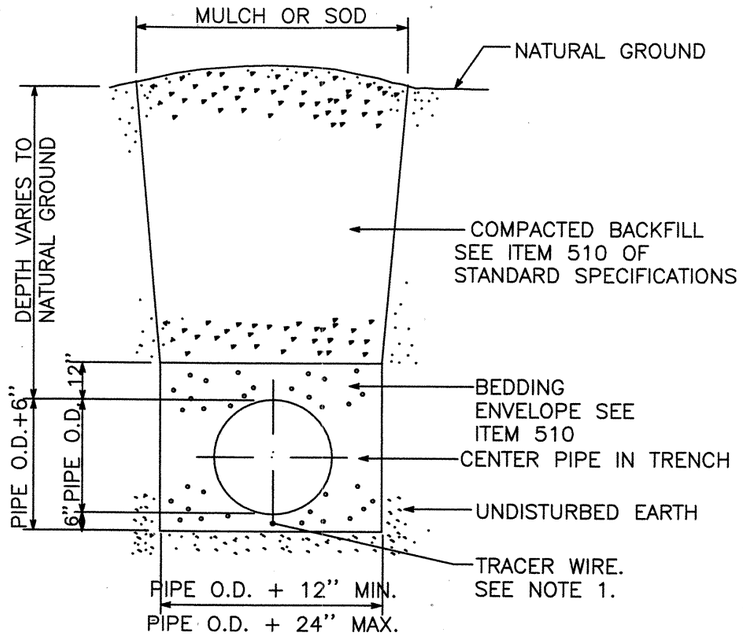

NOTE

1 TRACER WIRE, 16 GA SOLID COPPER WIRE, PLASTIC WRAP, 600 VOLT. HANDLEY INDUSTRIES, INC. 2 INCH CATHODIC TEST STATION AT EACH FIRE HYDRANT.

CITY OF AUSTIN WATER AND WASTEWATER UTILITY	TYPICAL TRENCH WITH UNFINISHED SURFACE	
	ADOPTED: 05-18-92	STANDARD NO. 510-5
	SCALE: N.T.S.	
APPROVED DATE	INITIAL: LLM	

DETAIL A
NTS

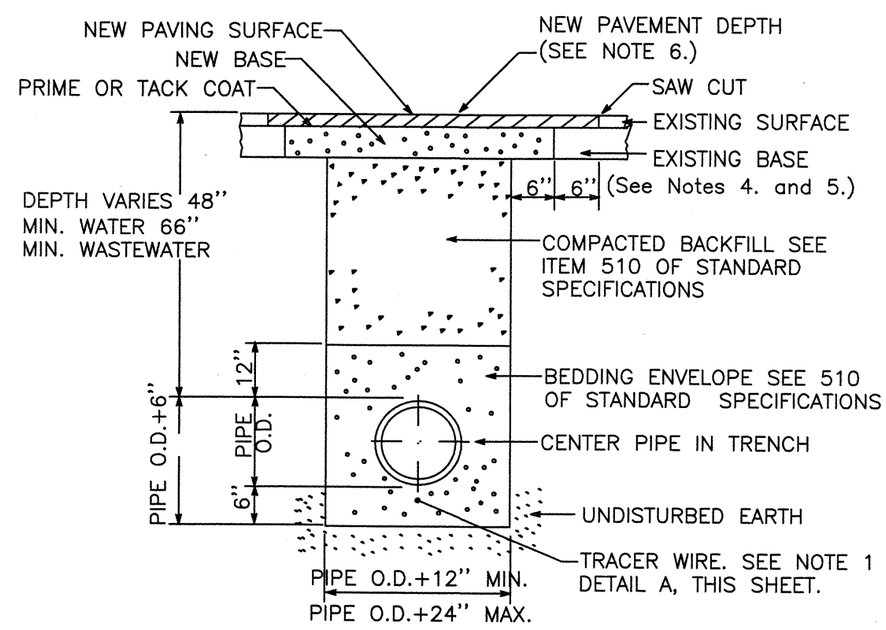

NOTES:

1. THE EXISTING PAVING SURFACE SHALL BE SAW CUT IN A STRAIGHT LINE A MINIMUM OF 12" WIDER THAN THE UNDISTURBED SIDES OF THE TRENCH, SYMETRICAL ABOUT THE CENTER LINE OF THE EXCAVATION.
2. ANY CONCRETE PAVING SHALL BE SAW CUT 6" WIDER THAN UNDISTURBED SIDES OF EXCAVATION.
3. IF EXCAVATION AREA IS OPEN FOR TEMPORARY PUBLIC USE THE SURFACE SHALL BE MAINTAINED LEVEL WITH ADJACENT RIDING SURFACE WITH COLD MIX OR TEMPORARY HOT MIX.
4. ROAD BASE AND SURFACE MATERIALS IN THE TRENCH CUT SHALL BE REPLACED IN KIND OF EQUAL THICKNESS, OR MINIMUM BASE THICKNESS OF 10 INCHES, WHICHEVER IS GREATER
5. ALL DAMAGED AREAS OF PAVEMENT OUTSIDE THE TRENCH CUT SHALL BE REMOVED AND REPLACED WITH MINIMUM OF 8 INCHES OF BASE OR MATCH EXISTING, WHICHEVER IS GREATER.
6. SURFACE PAVEMENT SHALL BE OF THE KIND AND THICKNESS AS EXISTING, OR MINIMUM 2 INCHES, WHICHEVER IS GREATER

CITY OF AUSTIN WATER AND WASTEWATER UTILITY	TYPICAL TRENCH WITH PAVED SURFACE	
	ADOPTED: 03-08-96	STANDARD NO. 510-3
	SCALE: N.T.S.	
APPROVED DATE	INITIAL: LLM	

DETAIL B
NTS

REV. DATE:2-27-97 DESCRIPTION: STANDARD MANUAL

REV No	DATE	DRWN	CHKD	REMARKS

DESIGNED BY: REYNOLDS
DRAWN BY: TG
SHEET CHK'D BY: REYNOLDS
CROSS CHK'D BY: WOELKE
DATE: SEPTEMBER 2004

CDM Camp Dresser & McKee Inc.
consulting engineering construction operations

CITY OF GEORGETOWN, TEXAS
HWY 29 WASTEWATER INTERCEPTOR
MISCELLANEOUS DETAILS IV

PROJECT No 38903C\DGN-2
FILE NAME: C-DET-4

WW-13

SHEET No 232

STATE OF TEXAS
WILLIAM T. REYNOLDS
34684
REGISTERED PROFESSIONAL ENGINEER
9/20/04

X-17BORD, X-SITE

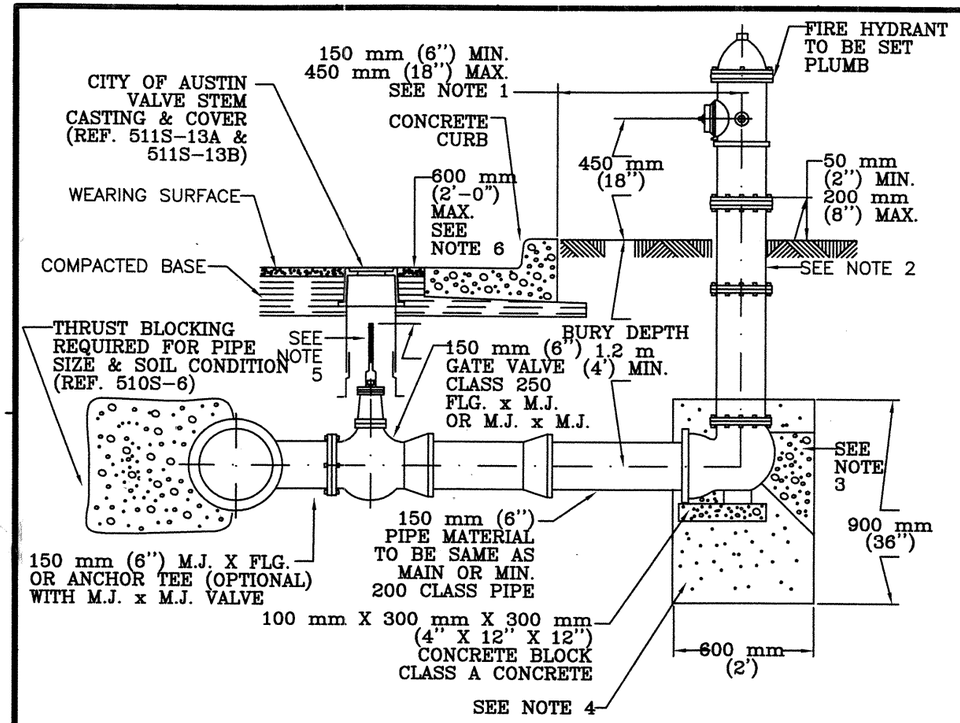

NOTES:

1. DIMENSIONS SHOWN ARE APPLICABLE IN SPACE BETWEEN CURB AND SIDEWALK. WHERE WALK ABUTS CURB, AND IN PUBLIC OR COMMERCIAL AREAS, DIMENSION FROM BACK OF CURB SHALL BE 0.9 m TO 1.8 m (3' TO 6'). HYDRANTS ARE NOT TO BE PLACED IN SIDEWALK AREAS. SEE CITY OF AUSTIN STANDARD SPECIFICATIONS ITEM NO. 511, WATER VALVES FOR LOCATION OF HYDRANT.
2. FOR BURY DEPTHS GREATER THAN 1.5 m (5'), ONE BARREL EXTENSION NOT EXCEEDING 600 mm (2') LENGTH SHALL BE INSTALLED DIRECTLY BELOW THE FIRE HYDRANT.
3. CONCRETE BLOCKING WITH A MIN, 0.15 m (1 1/2 FT) BEARING AREA. CLASS A CONCRETE. DO NOT BLOCK DRAIN HOLES.
4. CRUSHED STONE OR GRAVEL SHALL BE PLACED AROUND THE BOTTOM OF THE HYDRANT FOR A RADIUS OF AT LEAST 300 mm (12") AND EXTEND AT LEAST 300 mm (12") ABOVE THE OUTLET. DO NOT BLOCK DRAIN HOLES.
5. WELD SOCKET 64 mm X 51 mm (2 1/2 " X 2") DEEP TO 25 mm (1") SCH. 40 ROUND STEM EXTENSION, FITTED ON OPERATING NUT, SCH. 80 FOR LENGTHS OVER 3 m (10').
6. VALVE EXTENSIONS ARE REQUIRED ON ALL VALVES THAT EXCEED 0.9 m (3') DEEP FROM FINISHED GRADE. VALVE EXTENSIONS SHALL BE PLACED SUCH THAT THE EXTENSION NUT IS BETWEEN 450 AND 600 mm (18 AND 24") FROM FINISHED GRADE.

CITY OF AUSTIN WATER AND WASTEWATER UTILITY	STANDARD FIRE HYDRANT INSTALLATION	
RECORD COPY SIGNED BY KATHI F. PAYNE 4/5/99 ADOPTED	THE ARCHITECT/ENGINEER ASSUMES RESPONSIBILITY FOR APPROPRIATE USE OF THIS STANDARD.	STANDARD NO. 511S-17

DETAIL A — NTS

NOTES:

1. WELD SOCKET 2 5/8" X 1 1/4" DEEP TO 1 1/8" SOLID ROUND STEM EXTENSION, FITTED ON OPERATING NUT.
2. CITY OF AUSTIN STANDARD VALVE CASTING RING C-6 & LID C-7 OR C-3 LID IN UNPAVED AREAS SEE VALVE CASTING DETAIL.
3. NUT AT TOP OF VALVE EXTENSION ROD SHALL BE SQUARE 1 1/2" LONG WELDED TO TOP OF ROD.

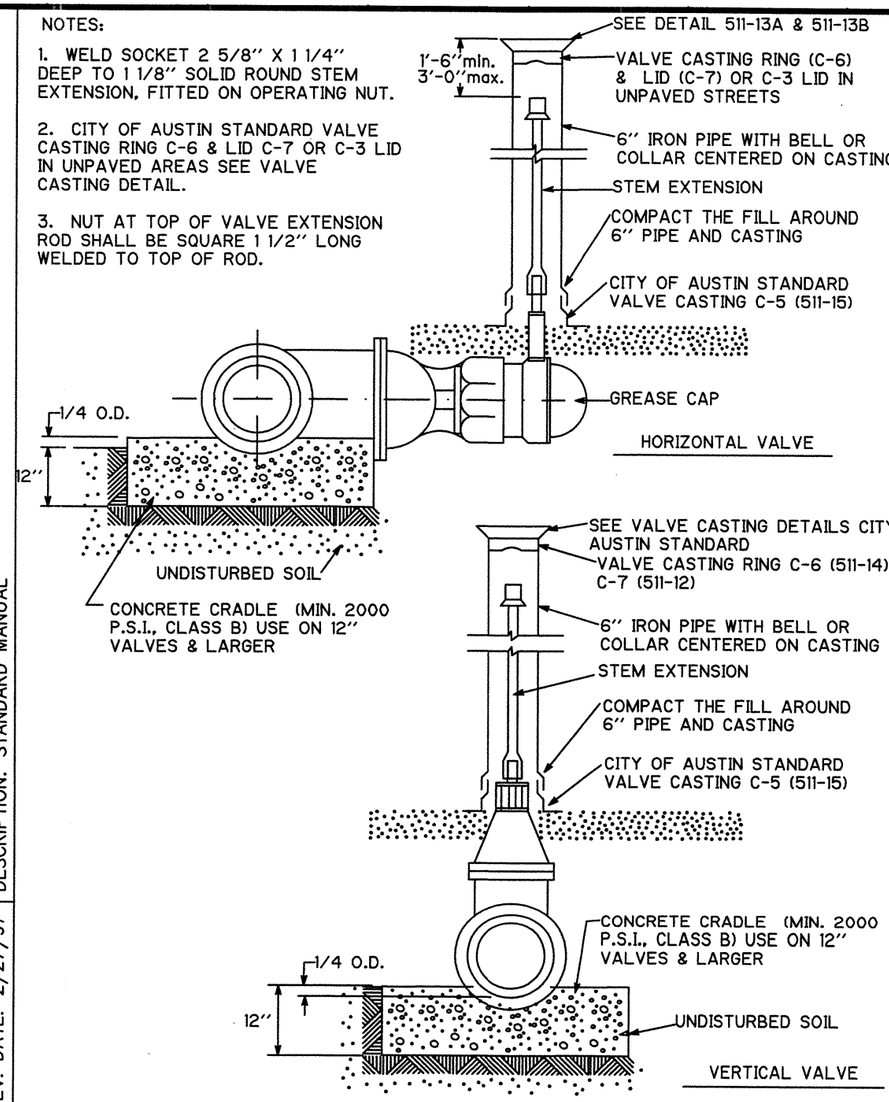

CITY OF AUSTIN WATER AND WASTEWATER UTILITY	TYPICAL GATE VALVE	
APPROVED DATE	ADOPTED: 2/11/86 SCALE: N.T.S. INITIAL: RAM	STANDARD NO. 511-7

DETAIL B — NTS

REV. DATE: 2/27/97 | DESCRIPTION: STANDARD MANUAL

REV No	DATE	DRWN	CHKD	REMARKS

DESIGNED BY: REYNOLDS
DRAWN BY: TG
SHEET CHK'D BY: REYNOLDS
CROSS CHK'D BY: WOELKE
DATE: SEPTEMBER 2004

CDM Camp Dresser & McKee Inc.
consulting engineering construction operations

CITY OF GEORGETOWN, TEXAS
HWY 29 WASTEWATER INTERCEPTOR

MISCELLANEOUS DETAILS V

PROJECT No 38903C\DGN-2
FILE NAME: C-DET-5

WW-14

SHEET No 233

STATE OF TEXAS
WILLIAM T. REYNOLDS
34684
REGISTERED PROFESSIONAL ENGINEER
9/20/04

S:\ACAD\38903C\DGN-2\C-DET-5 Layout1, 9/20/2004 8:07:19 AM, gieseketf, \\AUSSVR1\AUSPR05PCL
X-17BORD, X-SITE

S:\ACAD\38903C\DGN-2\C-DET-6, Layout1, 9/20/2004 8:08:11 AM, gieseketf, \\AUSSVR1\AUSPR05PCL

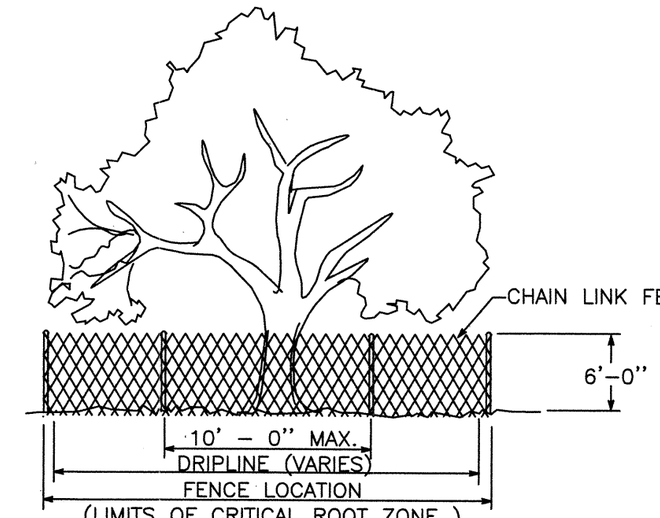

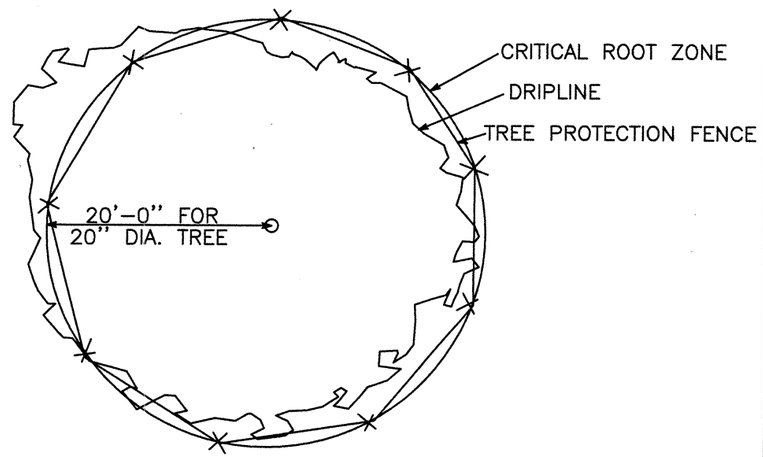

CITY OF AUSTIN DRAINAGE UTILITY	TREE PROTECTION FENCE TYPE A – CHAIN LINK	
	ADOPTED: 04–13–89	STANDARD NO.
	SCALE: N.T.S.	610–2
APPROVED DATE	INITIAL:	

DETAIL A
NTS

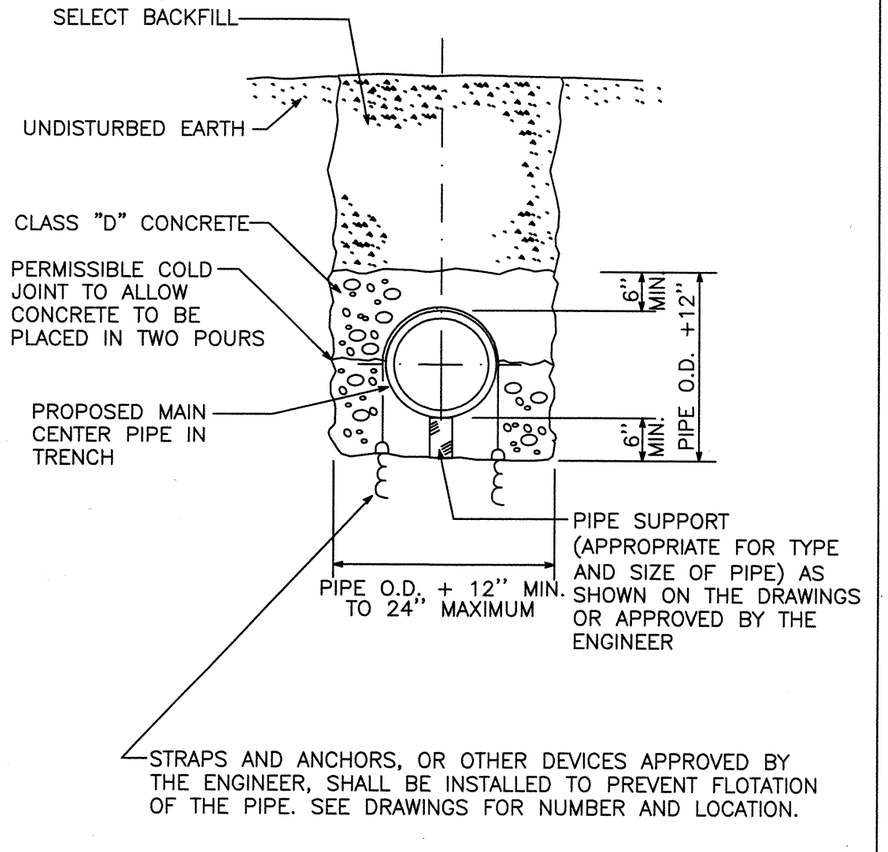

CITY OF AUSTIN WATER AND WASTEWATER UTILITY	CONCRETE ENCASEMENT	
	ADOPTED: 02–11–86	STANDARD NO.
	SCALE: N.T.S.	505–1
APPROVED DATE	INITIAL: LLKM	

DETAIL B
NTS

STATE OF TEXAS
WILLIAM T. REYNOLDS
34684
REGISTERED PROFESSIONAL ENGINEER
9/20/04

REV No	DATE	DRWN	CHKD	REMARKS

DESIGNED BY: REYNOLDS
DRAWN BY: TG
SHEET CHK'D BY: REYNOLDS
CROSS CHK'D BY: WOELKE
DATE: SEPTEMBER 2004

CDM Camp Dresser & McKee Inc.
consulting engineering construction operations

CITY OF GEORGETOWN, TEXAS
HWY 29 WASTEWATER INTERCEPTOR
MISCELLANEOUS DETAILS VI

PROJECT No 38903C\DGN-2
FILE NAME: C–DET–6

WW-15

SHEET No 234

REV. DATE: 2/27/97 | DESCRIPTION: STANDARD MANUAL

REV. DATE: 5–28–97 | DESCRIPTION: STANDARD MANUAL

X-17BORD, X-SITE

S:\ACAD\38903C\DGN-2\C-DET-7.dwg, layout1, 10/7/2004 9:26:59 AM, giesekef, \\AUSSVR1\AUSPR05PCL

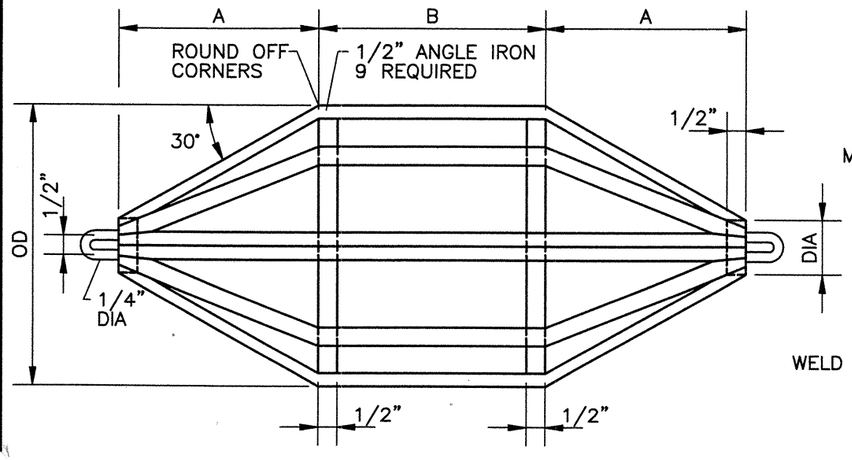

SIDE OR TOP VIEW

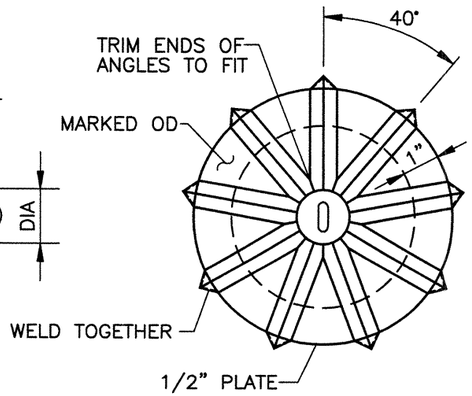

END VIEW

PIPE SIZE (IN)	A (IN)	B (IN)	MANDREL OD PVC (SDR 26) ASTM D3034 (IN)	DIA (IN)
8	5.3	6	7.36	1.40

DEFLECTION TESTING MANDREL

DETAIL A

NTS

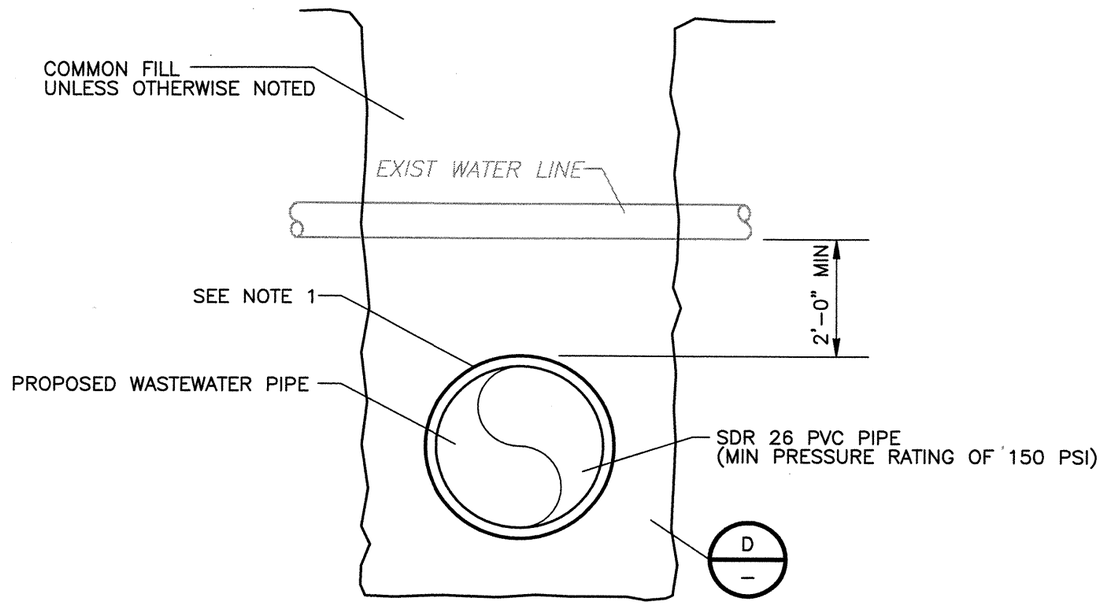

NOTE

1 CONTRACTOR SHALL CENTER ONE JOINT OF 8 INCH SDR 26 PVC, 150 PRESSURE RATED SERIES, PER ASTM D2241, WASTEWATER PIPE BENEATH 6 INCH OR LARGER WATER LINE. INSTALL A WATER TIGHT ADAPTOR BY SPECIFIED FITTINGS, OR EQUAL, AT FITTINGS.

WATER LINE CROSSING OF WASTEWATER LINE

DETAIL B

NTS

STATE OF TEXAS
WILLIAM T. REYNOLDS
34684
REGISTERED PROFESSIONAL ENGINEER

10/7/04

REV No	DATE	DRWN	CHKD	REMARKS

DESIGNED BY: REYNOLDS
DRAWN BY: TG
SHEET CHK'D BY: REYNOLDS
CROSS CHK'D BY: WOELKE
DATE: OCTOBER 2004

CDM Camp Dresser & McKee Inc.
consulting engineering construction operations

CITY OF GEORGETOWN, TEXAS
HWY 29 WASTEWATER INTERCEPTOR

MISCELLANEOUS DETAILS VII

PROJECT No 38903C\DGN-2
FILE NAME: C-DET-7

WW-16

SHEET No 235

X-17BORD, X-SITE

S:\ACAD\38903C\DGN-2\C-DET-8.dwg, Layout1, 9/20/2004 8:09:46 AM, gieseketf, \\AUSSVR1\AUSPR05PCL

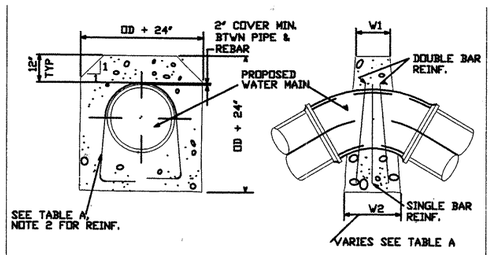

THRUST BLOCKING DETAIL A
VERTICAL DOWN BEND

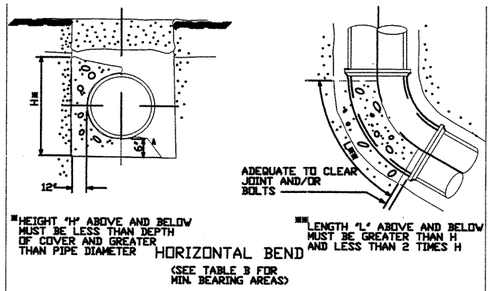

HORIZONTAL BEND
(SEE TABLE B FOR MIN. BEARING AREAS)

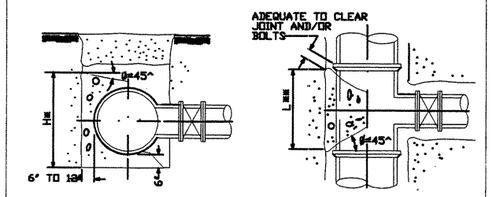

THRUST BLOCKING DETAIL B.1
TEE/OUTLET
(SEE TABLE B FOR MIN. BEARING AREAS)

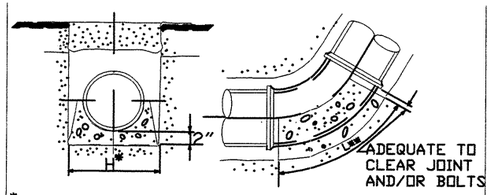

*THE DIMENSION FOR "H" MUST BE GREATER THAN DIAMETER OF THE PIPE

** LENGTH "L" ALONG THE BEND MUST BE GREATER THAN H AND LESS THAN 2 TIMES H

THRUST BLOCKING DETAIL B.2
VERTICAL BEND UPWARD
(SEE TABLE B FOR MIN. BEARING AREAS)

TABLE A
UPWARD THRUST GRAVITY BLOCKS

PIPE DIA.	MIN. TOP WIDTH W1(in)	ANGLE (degrees)	BOTTOM WIDTH-W2 (in)
6"	6"	0-5	SEE NOTE 3
		5-15	24
		15-25	48
		> 25	SEE NOTE 1
8"	6"	0-5	SEE NOTE 3
		5-9	30
		9-15	36
		>15	SEE NOTE 1
12"	6"	0-5	SEE NOTE 3
		5-15	48
		> 15	SEE NOTE 1
16"	12"	0-5	SEE NOTE 3
		5-10	60
		10-15	96
		> 15	SEE NOTE 1
24" THRU 36" DIA.		>5.0	SEE NOTE 1
42" THRU 48" DIA.		>3.0	SEE NOTE 1

NOTE 1: FOR ANGLES GREATER THAN THOSE INDICATED RESTRAINED JOINTS SHALL BE INSTALLED

NOTE 2: REINFORCEMENT SHALL BE PROVIDED AS FOLLOWS

6"-12" PIPE	1#5
14"-30" PIPE	2#5'S
36"-48" PIPE	2#7'S

NOTE 3: FOR JOINT DEFLECTIONS LESS THAN 5 DEGREES, NO HORIZONTAL OR VERTICAL THRUST RESTRAINT IS REQUIRED FOR PIPES LESS THAN 42" IN DIAMETER.

TABLE C
THRUST RESTRAINT LENGTHS FOR POLYETHYLENE ENCASED DUCTILE IRON PIPE [150psi working + 50% surge = 225psi]

SIZE IN.	DEPTH OF COVER (FT)	RESTRAINED LENGTH FEET 90^	45^	22-1/2^	11-1/4^
6	3.0	28	11	6	2
6	4.0	21	9	5	2
6	6.0	15	6	3	1
6	8.0	12	5	2	1
6	10.0	9	3	2	1
8	3.0	38	16	8	3
8	4.0	28	11	6	2
8	6.0	19	8	3	2
8	8.0	15	6	3	1
8	10.0	12	5	2	1
12	3.0	52	21	10	6
12	4.0	41	17	8	3
12	6.0	28	11	6	2
12	8.0	21	9	5	2
12	10.0	17	7	3	1
16	3.0	60	25	11	6
16	4.0	47	19	9	5
16	6.0	33	14	7	3
16	8.0	26	11	6	2
16	10.0	21	9	5	2
24	3.0	80	34	16	8
24	4.0	64	26	13	7
24	6.0	45	19	9	5
24	8.0	36	15	7	3
24	10.0	28	11	6	2
36	3.0	107	44	21	10
36	4.0	88	36	17	9
36	6.0	64	26	13	7
36	8.0	50	20	10	5
36	10.0	43	18	9	5
48	3.0	131	54	26	13
48	4.0	107	44	21	9
48	6.0	80	34	16	8
48	8.0	64	26	13	7
48	10.0	52	21	10	6

NOTE - RESTRAINED JOINT LENGTHS SHALL BE BASED ON DEPTH FROM PROPOSED GRADE LINE OR EXISTING GROUND ELEVATION, WHICHEVER IS LESS

TABLE B
MINIMUM THRUST BLOCK AREAS H [ft] x L [ft]

		6" PIPE			8" PIPE			12" PIPE			16" PIPE			24" PIPE			36" PIPE			48" PIPE		
		SOIL A	SOIL B	SOIL C	SOIL A	SOIL B	SOIL C	SOIL A	SOIL B	SOIL C	SOIL A	SOIL B	SOIL C	SOIL A	SOIL B	SOIL C	SOIL A	SOIL B	SOIL C	SOIL A	SOIL B	SOIL C
6^-17^	AREA	2.48	1.00	1.00	4.28	1.07	1.00	9.12	2.28	1.14	15.80	3.95	1.98	34.76	8.69	4.34	RESTR.	19.16	9.58	RESTR.	33.70	16.85
17^-29^	AREA	4.20	1.05	1.00	7.24	1.81	1.00	15.44	3.86	1.93	RESTR.	6.70	3.35	RESTR.	14.73	7.36	RESTR.	32.45	16.22	RESTR.	57.10	28.46
29^-40^	AREA	5.76	1.44	1.00	9.92	2.48	1.24	RESTR.	5.27	2.64	RESTR.	9.15	4.58	RESTR.	20.11	10.05	RESTR.	RESTR.	22.16	RESTR.	RESTR.	39.04
40^-51^	AREA	RESTR.	1.81	1.00	RESTR.	3.12	1.56	RESTR.	6.63	3.32	RESTR.	11.52	5.76	RESTR.	25.32	12.66	RESTR.	RESTR.	27.90	RESTR.	RESTR.	49.08
51^-68^	AREA	RESTR.	2.35	1.18	RESTR.	4.05	2.02	RESTR.	8.61	4.30	RESTR.	14.96	7.48	RESTR.	32.89	16.44	RESTR.	RESTR.	36.24	RESTR.	RESTR.	RESTR.
68^-89^	AREA	RESTR.	2.97	1.48	RESTR.	5.12	2.56	RESTR.	10.89	5.44	RESTR.	18.92	9.46	RESTR.	RESTR.	20.79	RESTR.	RESTR.	RESTR.	RESTR.	RESTR.	RESTR.

USE SOIL A COLUMN FOR PLACEMENT OF CONCRETE AGAINST SOFT SOIL(SEE SOIL A)
USE SOIL B COLUMN FOR PLACEMENT OF CONCRETE AGAINST STABLE OR FIRM SOIL. (SEE SOIL B)
USE SOIL B COLUMN FOR PLACEMENT OF CONCRETE AGAINST MIXED SOIL AND ROCK.
USE SOIL C COLUMN FOR PLACEMENT OF CONCRETE AGAINST LIMESTONE ROCK.(SEE SOIL C)

RESTR. - REFER TO TABLE 'C' FOR RESTRAINED JOINT LENGTHS

SOIL	DESCRIPTION	BEARING CAPACITY
A	SOFT SOIL OR LOOSE SAND	1000 Lb/Sq.Ft.
B	STABLE OR FIRM SOIL AND/OR WEATHERED LIMESTONE	4000 Lb/Sq.Ft.
C	SOLID LIMESTONE ROCK	8000 Lb/Sq.Ft.

CITY OF AUSTIN, TEXAS
DEPARTMENT OF PUBLIC WORKS AND TRANSPORTATION
ENGINEERING DESIGN DIVISION
SURVEY:
DESIGN:
DRAWN:
SCALE

DETAIL A
NTS

STATE OF TEXAS
WILLIAM T. REYNOLDS
34684
REGISTERED PROFESSIONAL ENGINEER
9/20/04

REV No	DATE	DRWN	CHKD	REMARKS

DESIGNED BY: REYNOLDS
DRAWN BY: TG
SHEET CHK'D BY: REYNOLDS
CROSS CHK'D BY: WOELKE
DATE: SEPTEMBER 2004

CDM Camp Dresser & McKee Inc.
consulting engineering construction operations

CITY OF GEORGETOWN, TEXAS
HWY 29 WASTEWATER INTERCEPTOR
MISCELLANEOUS DETAILS VIII

PROJECT No 38903C\DGN-2
FILE NAME: C-DET-8

WW-17

SHEET No 236

X-17BORD, X-SITE

TEXAS COMMISSION ON ENVIRONMENTAL QUALITY SEWAGE COLLECTION SYSTEM GENERAL CONSTRUCTION NOTES

1. THIS ORGANIZED SEWAGE COLLECTION SYSTEM MUST BE DESIGNED & CONSTRUCTED IN ACCORDANCE WITH THE TEXAS NATURAL RESOURCE CONSERVATION COMMISSION'S (TNRCC) EDWARDS AQUIFER RULES 30 TEXAS ADMINISTRATIVE CODE (TAC) 213.5(C), THE DESIGN CRITERIA FOR SEWERAGE SYSTEMS 30 TAC 317.1, 30 TAC 317.2, 30 TAC 317.3, AND 30 TAC 317.13, AND THE CITY OF GEORGETOWN STANDARD SPECIFICATIONS.

2. ALL CONTRACTORS CONDUCTING REGULATED ACTIVITIES ASSOCIATED WITH THIS PROPOSED REGULATED PROJECT MUST BE PROVIDED WITH COPIES OF THE SEWAGE COLLECTION SYSTEM PLAN AND THE TNRCC LETTER INDICATING THE SPECIFIC CONDITIONS OF ITS APPROVAL. DURING THE COURSE OF THESE REGULATED ACTIVITIES, THE CONTRACTORS MUST BE REQUIRED TO KEEP ON-SITE COPIES OF THE PLAN AND THE APPROVAL LETTER.

3. PRIOR TO COMMENCING ANY REGULATED ACTIVITY, THE APPLICANT OR HIS AGENT MUST NOTIFY THE AUSTIN REGIONAL OFFICE IN WRITING, OF THE DATE ON WHICH THE REGULATED ACTIVITY WILL BEGIN.

4. ANY MODIFICATION TO THE ACTIVITIES DESCRIBED IN THE REFERENCED SCS APPLICATION FOLLOWING THE DATE OF APPROVAL MAY REQUIRE THE SUBMITTAL OF AN SCS APPLICATION TO MODIFY THIS APPROVAL INCLUDING THE PAYMENT OF APPROPRIATE FEES & ALL INFORMATION NECESSARY FOR ITS REVIEW & APPROVAL.

5. THE TEMPORARY EROSION AND SEDIMENTATION CONTROLS MUST BE INSTALLED PRIOR TO INITIATING ANY OTHER CONSTRUCTION ACTIVITY AND MAINTAINED IN ACCORDANCE WITH THE REQUIREMENTS OF THE CONSTRUCTION PLANS. ALL TEMPORARY EROSION AND SEDIMENTATION CONTROLS MUST BE REMOVED WHEN THE CONSTRUCTION AREA IS STABILIZED.

6. THE SEWER LINE TRENCH DETAILS SHOWING THE CROSS SECTION WITH THE DIMENSIONS, PIPE PLACEMENT, AND BACKFILL INSTRUCTIONS ARE INCLUDED ON PLAN SHEET CZ-3 OF THESE PLANS. ALL SEWER PIPES JOINTS MUST MEET THE REQUIREMENTS IN 30 TAC 317.2(A)(3).

   GRAVITY LINES MUST BE SDR 35 OR LESS. PRESSURIZED SEWER SYSTEMS MUST HAVE PIPE WITH A MINIMUM WORKING PRESSURE RATING OF 150 PSI.

   THE ASTM, ANSI, OR AWWA SPECIFICATION NUMBERS FOR THE PIPE(S) AND JOINTS ARE ASTM D3034, ASTM F789, ASTM F679 AND/OR ASTM F794.

   THE PIPE MATERIAL, THE PRESSURE CLASSES, AND THE SDR &/OR DR DESIGNATIONS ARE GRAVITY FLOW, PVC, SDR 35, PS-46.

7. IF ANY SENSITIVE FEATURES ARE DISCOVERED DURING THE WASTEWATER LINE TRENCHING ACTIVITIES, ALL REGULATED ACTIVITIES NEAR THE SENSITIVE FEATURE MUST BE SUSPENDED IMMEDIATELY. THE OWNER MUST NOTIFY THE APPROPRIATE REGIONAL OFFICE OF THE TEXAS NATURAL RESOURCE CONSERVATION COMMISSION IN WRITING WITHIN TWO WORKING DAYS OF THE FEATURE DISCOVERED. THE APPLICANT MUST SUBMIT A PLAN FOR ENSURING THE STRUCTURAL INTEGRITY OF THE SEWER LINE OR FOR MODIFYING THE PROPOSED COLLECTION SYSTEM ALIGNMENT AROUND THE FEATURE. THE REGULATED ACTIVITIES NEAR THE SENSITIVE FEATURE MAY NOT PROCEED UNTIL THE EXECUTIVE DIRECTOR HAS REVIEWED & APPROVED THE METHODS PROPOSED TO PROTECT THE SENSITIVE FEATURE & THE EDWARDS AQUIFER FROM ANY POTENTIALLY ADVERSE IMPACTS TO WATER QUALITY WHILE MAINTAINING THE STRUCTURAL INTEGRITY OF THE LINE.

8. SEWER LINES LOCATED WITHIN OR CROSSING THE 5-YEAR FLOOD PLAIN OF A DRAINAGE WAY WILL BE PROTECTED FROM INUNDATION AND STREAM VELOCITIES WHICH COULD CAUSE EROSION AND SCOURING OF BACKFILL. THE TRENCH MUST BE CAPPED WITH CONCRETE TO PREVENT SCOURING OF BACKFILL OR THE SEWER LINES MUST BE ENCASED IN CONCRETE. ALL CONCRETE SHALL HAVE A MINIMUM THICKNESS OF SIX (6) INCHES.

9. BLASTING PROCEDURES FOR PROTECTION OF EXISTING SEWER LINES AND OTHER UTILITIES WILL BE IN ACCORDANCE WITH THE NATIONAL FIRE PROTECTION ASSOCIATION CRITERIA. SAND IS NOT ALLOWED AS BEDDING OR BACKFILL IN TRENCHES THAT HAVE BEEN BLASTED. IF ANY EXISTING SEWER LINES ARE DAMAGED, THE LINES MUST BE REPAIRED & RE-TESTED.

10. ALL MANHOLES CONSTRUCTED OR REHABILITATED ON THIS PROJECT MUST HAVE A WATERTIGHT SEAL ON SIZE RESILIENT CONNECTORS ALLOWING FOR DIFFERENTIAL SETTLEMENT. IF MANHOLES ARE CONSTRUCTED WITHIN THE 100 YEAR FLOODPLAIN, THE COVER MUST HAVE A GASKET & BE BOLTED TO THE RING. WHERE GASKETED MANHOLE COVERS ARE REQUIRED FOR MORE THAN THREE MANHOLES IN SEQUENCE OR FOR MORE THAN 1500 FEET, ALTERNATE MEANS OF VENTING WILL BE PROVIDED. BRICKS ARE NOT AN ACCEPTABLE CONSTRUCTION MATERIAL FOR ANY PORTION OF THE MANHOLE.

    THE DIAMETER OF THE MANHOLES MUST BE A MINIMUM OF FOUR FEET AND THE MANHOLE COVERS MUST HAVE A MINIMUM NOMINAL DIAMETER OF TWO FEET. THESE DIMENSIONS AND OTHER DETAILS SHOWING COMPLIANCE WITH THE COMMISSION'S RULES CONCERNING MANHOLES AND SEWER LINE/MANHOLE INVERTS DESCRIBED IN 30 TAC 317.2(C)(5)(E) ARE INCLUDED ON PLAN SHEET 12 OF 18.

    IT IS SUGGESTED THAT ENTRANCE INTO MANHOLES IN EXCESS OF FOUR FEET DEEP BE ACCOMPLISHED BY MEANS OF A PORTABLE LADDER. WHERE STEPS ARE USED, THEY SHALL BE MADE OF A NON-CORROSIVE MATERIAL & BE IN ACCORDANCE WITH APPLICABLE OSHA SPECIFICATIONS.

11. WHERE WATER LINES AND NEW SEWER LINE ARE INSTALLED WITH A SEPARATION DISTANCE CLOSER NINE FEET (I.E., WATER LINES CROSSING WASTEWATER LINES, WATER LINES PARALLELING WASTEWATER LINES, OR WATER LINES CLOSER TO MANHOLES) THE INSTALLATION MUST MEET THE REQUIREMENTS OF 30 TAC 317.13 (DESIGN OF SEWERAGE SYSTEMS) OR 30 TAC 290.44(E) (WATER HYGIENE).

12. WHERE SEWER LINES DEVIATE FROM STRAIGHT ALIGNMENT AND UNIFORM GRADE ALL CURVATURE OF SEWER PIPE MUST BE ACHIEVED BY THE FOLLOWING PROCEDURE WHICH IS RECOMMENDED BY THE PIPE MANUFACTURER: N/A.

    IF PIPE FLEXURE IS PROPOSED, THE FOLLOWING METHOD OF PREVENTING DEFLECTION OF THE JOINT MUST BE USED: N/A.

    SPECIFIC CARE MUST BE TAKEN TO ENSURE THAT THE JOINT IS PLACED IN THE CENTER OF THE TRENCH AND PROPERLY BEDDED IN ACCORDANCE WITH 30 TAC 317.2(A)(5).

13. NEW SEWAGE COLLECTION SYSTEM LINES MUST BE CONSTRUCTED WITH "STUB OUTS" FOR THE CONNECTION OF ANTICIPATED EXTENSIONS. THE LOCATION OF SUCH "STUB OUTS" MUST BE MARKED ON THE GROUND SUCH THAT THE LOCATION OF SUCH "STUB OUTS" CAN BE EASILY DETERMINED AT THE TIME OF CONNECTION OF THE EXTENSIONS. SUCH "STUB OUTS" MUST BE MANUFACTURED WYES OR TEES THAT ARE COMPATIBLE IN SIZE AND MATERIAL WITH BOTH THE SEWER LINE AND THE EXTENSION. AT THE TIME OF ORIGINAL CONSTRUCTION, NEW "STUB-OUTS" MUST BE CONSTRUCTED SUFFICIENTLY TO EXTEND BEYOND THE EDGE(S) OF ANY STREET PAVEMENT UNDER WHICH THEY WILL PASS TO THE PROPERTY LINE. ALL "STUB-OUTS" MUST BE SEALED WITH A MANUFACTURED CAP TO PREVENT LEAKAGE. EXTENSIONS THAT WERE NOT ANTICIPATED AT THE TIME OF ORIGINAL CONSTRUCTION OR THAT ARE TO BE CONNECTED TO AN EXISTING SEWER LINE NOT FURNISHED WITH "STUB OUTS" MUST BE CONNECTED USING A MANUFACTURED SADDLE AND IN ACCORDANCE WITH ACCEPTED PLUMBING TECHNIQUES.

    IF NO STUB-OUT IS PRESENT AN ALTERNATE METHOD OF JOINING LATERALS IS SHOWN IN THE DETAIL ON PLAN SHEET CZ-1. (FOR POTENTIAL FUTURE LATERALS).

    THE PRIVATE SERVICE LATERAL STUB-OUTS MUST BE INSTALLED AS SHOWN ON THE PLAN & PROFILE SHEETS ON PLAN SHEET CZ-1 & MARKED AFTER BACKFILLING AS SHOWN IN THE DETAIL ON PLAN SHEET CZ-1.

14. TRENCHING, BEDDING & BACKFILL MUST CONFORM WITH 30 TAC 317.2(A)(5). THE BEDDING & BACKFILL FOR FLEXIBLE PIPE MUST COMPLY WITH THE STANDARDS OF ASTM D-2321, CLASSES IA, IB, II OR III. RIGID PIPE BEDDING MUST COMPLY WITH THE REQUIREMENTS OF ASTM C 12 (ANSI A 106.2) CLASSES A, B OR C.

15. SEWER LINES MUST BE TESTED FROM MANHOLE TO MANHOLE. WHEN A NEW SEWER LINE IS CONNECTED TO AN EXISTING STUB OR CLEAN-OUT, IT MUST BE TESTED FROM EXISTING MANHOLE TO NEW MANHOLE. IF A STUB OR CLEAN-OUT IS USED AT THE END OF THE PROPOSED SEWER LINE, NO PRIVATE SERVICE ATTACHMENTS MAY BE CONNECTED BETWEEN THE LAST MANHOLE & THE CLEANOUT UNLESS IT CAN BE CERTIFIED AS CONFORMING WITH THE PROVISIONS OF 30 TAC 213.5(C)(3)(E).

16. ALL SEWER LINES MUST BE TESTED IN ACCORDANCE WITH 30 TAC 317.2(A)(4). THE ENGINEER MUST RETAIN COPIES OF ALL TEST RESULTS WHICH MUST BE MADE AVAILABLE TO THE EXECUTIVE DIRECTOR UPON REQUEST. THE ENGINEER MUST CERTIFY IN WRITING THAT ALL WASTEWATER LINES HAVE PASSED ALL REQUIRED TESTING TO THE APPROPRIATE REGIONAL OFFICE WITHIN 30 DAYS OF TEST COMPLETION & PRIOR TO USE OF THE NEW COLLECTION SYSTEM. TESTING METHOD WILL BE:

    (A) INFILTRATION OR EX-FILTRATION TESTS. THE TOTAL EX-FILTRATION AS DETERMINED BY A HYDROSTATIC HEAD TEST, MUST NOT EXCEED 50 GALLONS PER INCH DIAMETER PER MILE OF PIPE PER 24 HOURS AT A MINIMUM TEST HEAD OF TWO FEET ABOVE THE CROWN OF THE PIPE AT THE UPSTREAM MANHOLE. WHEN PIPES ARE INSTALLED BELOW THE GROUNDWATER LEVEL AN INFILTRATION TEST WILL BE USED IN LIEU OF THE EX-FILTRATION TEST. THE TOTAL INFILTRATION, AS DETERMINED BY A HYDROSTATIC HEAD TEST, MUST NOT EXCEED 50 GALLONS PER INCH DIAMETER PER MILE OF PIPE PER 24 HOURS AT A MINIMUM TEST HEAD OF TWO FEET ABOVE THE CROWN OF THE PIPE AT THE UPSTREAM MANHOLE, OR AT LEAST TWO FEET ABOVE EXISTING GROUNDWATER LEVEL, WHICHEVER IS GREATER. FOR CONSTRUCTION WITHIN THE 25 YEAR FLOOD PLAIN, THE INFILTRATION OR EX-FILTRATION MUST NOT EXCEED 10 GALLONS PER INCH DIAMETER PER MILE OF PIPE PER 24 HOURS AT THE SAME MINIMUM TEST HEAD. IF THE QUANTITY OF INFILTRATION OR EX-FILTRATION EXCEEDS THE MAXIMUM QUANTITY SPECIFIED, REMEDIAL ACTION MUST BE UNDERTAKEN IN ORDER TO REDUCE THE INFILTRATION OR EX-FILTRATION TO AN AMOUNT WITHIN THE LIMITS SPECIFIED.

    (B) LOW PRESSURE AIR TEST. THE PROCEDURE FOR THE LOW PRESSURE AIR TEST MUST CONFORM TO THE PROCEDURES DESCRIBED IN ASTM C-828, ASTM C-924, ASTM F-1417 OR OTHER APPROPRIATE PROCEDURES, EXCEPT FOR TESTING TIMES. THE TEST TIMES MUST BE AS OUTLINED IN THIS SECTION. FOR SECTIONS OF PIPE LESS THAN 36-INCH AVERAGE INSIDE DIAMETER, THE FOLLOWING PROCEDURE MUST APPLY UNLESS THE PIPE IS TO BE JOINT TESTED. THE PIPE WILL BE PRESSURIZED TO 3.5 PSI GREATER THAN THE PRESSURE EXERTED BY GROUNDWATER ABOVE THE PIPE. ONCE THE PRESSURE IS STABILIZED, THE MINIMUM TIME ALLOWABLE FOR THE PRESSURE TO DROP FROM 3.5 POUNDS PER SQUARE INCH GAUGE TO 2.5 POUNDS PER SQUARE INCH GAUGE MUST BE COMPUTED FROM THE FOLLOWING EQUATION:

    WHERE: $T = \frac{0.085 \times D \times K}{Q}$

    T = TIME FOR PRESSURE TO DROP 1.0 POUND PER SQUARE INCH GAUGE IN SECONDS
    K = 0.000419 x D x L, BUT NOT LESS THAN 1.0
    D = AVERAGE INSIDE DIAMETER IN INCHES
    L = LENGTH OF LINE OF SAME SIZE BEING TESTED, IN FEET
    Q = RATE OF LOSS, 0.0015 CUBIC FEET PER MINUTE PER SQUARE FOOT INTERNAL SURFACE WILL BE USED.

    SINCE A K VALUE OF LESS THAN 1.0 WILL NOT BE USED, THERE ARE MINIMUM TIMES FOR EACH PIPE DIAMETER AS OUTLINED BELOW:

PIPE DIAMETER (INCHES)	MINIMUM TIME (SECONDS)	LENGTH FOR MINIMUM TIME (FEET)	TIME FOR LONGER LENGTH (SECONDS)
6	340	398	0.855(L)
8	454	298	1.520(L)
10	567	239	2.374(L)
12	680	199	3.419(L)
15	850	159	5.342(L)
18	1020	133	7.693(L)
21	1190	114	10.471(L)
24	1360	100	13.676(L)
27	1530	88	17.309(L)
30	1700	80	21.369(L)
33	1870	72	25.856(L)

    THE TEST MAY BE STOPPED IF NO PRESSURE LOSS HAS OCCURRED DURING THE FIRST 25% OF THE CALCULATED TESTING TIME. IF ANY PRESSURE LOSS OR LEAKAGE HAS OCCURRED DURING THE FIRST 25% OF THE TESTING PERIOD, THEN THE TEST MUST CONTINUE FOR THE ENTIRE TEST DURATION AS OUTLINED ABOVE OR UNTIL FAILURE. LINES WITH A 27-INCH AVERAGE INSIDE DIAMETER AND LARGER MAY BE AIR TESTED AT EACH JOINT. PIPE GREATER THAN 36 INCH DIAMETER MUST BE TESTED FOR LEAKAGE AT EACH JOINT. IF THE JOINT TEST IS USED A VISUAL INSPECTION OF THE JOINT MUST BE PERFORMED IMMEDIATELY AFTER TESTING. THE PIPE IS TO BE PRESSURIZED TO 3.5 PSI GREATER THAN THE PRESSURE EXERTED BY GROUNDWATER ABOVE THE PIPE. ONCE THE PRESSURE HAS STABILIZED, THE MINIMUM TIME ALLOWABLE FOR THE PRESSURE TO DROP FROM 3.5 POUNDS PER SQUARE INCH GAUGE TO 2.5 POUNDS PER SQUARE INCH GAUGE MUST BE 10 SECONDS.

    (C) DEFLECTION TESTING. DEFLECTION TESTS MUST BE PERFORMED ON ALL FLEXIBLE PIPES. FOR PIPELINES WITH INSIDE DIAMETERS LESS THAN 27 INCHES, A RIGID MANDREL MUST BE USED TO MEASURE DEFLECTION. FOR PIPELINES WITH AN INSIDE DIAMETER OF 27 INCHES AND GREATER, A METHOD APPROVED BY THE EXECUTIVE DIRECTOR MUST BE USED TO TEST FOR VERTICAL DEFLECTIONS. OTHER METHODS MUST PROVIDE A PRECISION OF AT LEAST TWO TENTHS OF ONE PERCENT (0.2%) DEFLECTION. THE TEST MUST BE CONDUCTED AFTER THE FINAL BACKFILL HAS BEEN IN PLACE AT LEAST 30 DAYS. NO PIPE WILL EXCEED A DEFLECTION OF FIVE PERCENT. IF A PIPE SHOULD FAIL TO PASS THE DEFLECTION TEST, THE PROBLEM MUST BE CORRECTED AND A SECOND TEST WILL BE CONDUCTED AFTER THE FINAL BACKFILL HAS BEEN IN PLACE AN ADDITIONAL 30 DAYS. THE TESTS MUST BE PERFORMED WITHOUT MECHANICAL PULLING DEVICES. THE DESIGN ENGINEER SHOULD RECOGNIZE THAT THIS IS A MAXIMUM DEFLECTION CRITERION FOR ALL PIPES AND THAT DEFLECTION TEST LESS THAN FIVE PERCENT MAY BE MORE APPROPRIATE FOR SPECIFIC TYPES AND SIZES OF PIPE. UPON COMPLETION OF CONSTRUCTION, THE DESIGN ENGINEER OR OTHER TEXAS REGISTERED PROFESSIONAL ENGINEER APPOINTED BY THE OWNER WILL CERTIFY, TO THE EXECUTIVE DIRECTOR, THAT THE ENTIRE INSTALLATION HAS PASSED THE DEFLECTION TEST. THIS CERTIFICATION MAY BE MADE IN CONJUNCTION WITH THE NOTICE OF COMPLETION REQUIRED IN 37 TAC 317.6(C)(7) OF THIS TITLE (RELATING TO GENERAL PROVISIONS). THIS CERTIFICATION MUST BE PROVIDED FOR THE COMMISSION TO CONSIDER THE REQUIREMENTS OF THE APPROVAL TO HAVE BEEN MET.

    (I) THE RIGID MANDREL SHALL HAVE AN OUTSIDE DIAMETER (OD) EQUAL TO 95% OF THE INSIDE DIAMETER (ID) OF THE PIPE. THE INSIDE DIAMETER OF THE PIPE, FOR THE PURPOSE OF DETERMINING THE OUTSIDE DIAMETER OF THE MANDREL, SHALL BE THE AVERAGE OUTSIDE DIAMETER MINUS TWO MINIMUM WALL THICKENESSES FOR OD CONTROLLED PIPE & THE AVERAGE INSIDE DIAMETER FOR ID CONTROLLED PIPE. ALL DIMENSIONS SHALL BE PER APPROPRIATE STANDARD. STATISTICAL OR OTHER "TOLERANCE PACKAGES" SHALL NOT BE CONSIDERED IN MANDREL SIZING.

    (II) THE RIGID MANDREL SHALL BE CONSTRUCTED OF A METAL OR RIGID PLASTIC MATERIAL THAT CAN WITHSTAND 200 PSI WITHOUT BEING DEFORMED. THE MANDREL SHALL HAVE NINE OR MORE "RUNNERS" OR "LEGS" AS LONG AS THE TOTAL NUMBER OF LEGS IS AN ODD NUMBER. THE BARREL SECTION OF THE MANDREL SHALL HAVE A LENGTH OF AT LEAST 75% OF THE INSIDE DIAMETER. A PROVING RING SHALL BE PROVIDED & USED FOR EACH SIZE MANDREL IN USE.

    (III) ADJUSTABLE OR FLEXIBLE MANDRELS ARE PROHIBITED. A TELEVISION INSPECTION IS NOT A SUBSTITUTE FOR THE DEFLECTION TEST. A DEFLECTOMETER MAY BE APPROVED FOR USE ON A CASE BY CASE BASIS. MANDRELS WITH REMOVABLE LEGS OR RUNNERS MAY BE ACCEPTED ON A CASE BY CASE BASIS.

17. ALL MANHOLES MUST BE TESTED TO MEET OR EXCEED THE REQUIREMENTS OF 30 TAC 317.2(C)(5)(H).

18. ALL PRIVATE SERVICE LATERALS MUST BE INSPECTED AND CERTIFIED IN ACCORDANCE WITH 30 TAC 213.5(C)(3)(D). IF APPLICABLE, AFTER INSTALLATION OF AND PRIOR TO COVERING, AND CONNECTING A PRIVATE SERVICE LATERAL TO AN EXISTING ORGANIZED SEWAGE COLLECTION SYSTEM, A TEXAS REGISTERED PROFESSIONAL ENGINEER, TEXAS REGISTERED SANITARIAN, OR APPROPRIATE CITY INSPECTOR MUST VISUALLY INSPECT THE PRIVATE SERVICE LATERAL AND THE CONNECTION TO THE SEWAGE COLLECTION SYSTEM, AND CERTIFY THAT IT IS CONSTRUCTED IN CONFORMITY WITH THE APPLICABLE PROVISIONS OF THIS SECTION. THE OWNER OF THE COLLECTION SYSTEM MUST MAINTAIN SUCH CERTIFICATIONS FOR FIVE YEARS AND FORWARD COPIES TO THE APPROPRIATE REGIONAL OFFICE UPON REQUEST. CONNECTIONS MAY ONLY BE MADE TO AN APPROVED SEWAGE COLLECTION SYSTEM.

STATE OF TEXAS
WILLIAM T. REYNOLDS
34684
REGISTERED PROFESSIONAL ENGINEER

9/20/04

REV No	DATE	DRWN	CHKD	REMARKS

DESIGNED BY: REYNOLDS
DRAWN BY: TG
SHEET CHK'D BY: REYNOLDS
CROSS CHK'D BY: WOELKE
DATE: SEPTEMBER 2004

CDM Camp Dresser & McKee Inc.
consulting engineering construction operations

CITY OF GEORGETOWN, TEXAS
HWY 29 WASTEWATER INTERCEPTOR
GENERAL NOTES

PROJECT No 38903C\DGN-2
FILE NAME: G-NOTES

WW-18

SHEET No 237

S:\ACAD\38903C\DGN-2\G-NOTES.dgn, Layout1, 9/20/2004 8:10:06 AM, gieseketf, \\AUSSVR1\AUSPR05PCL
X-17BORD, X-SITE

S:\ACAD\38903C\DGN-2\F-QUANT Model, 10/6/2004 3:29:03 PM, giesekettf, \\AUSSVR1\AUSPR05PCL

WATER & WASTEWATER MAINS SUMMARY

SHEET NO	ENCASEMENT PIPE 30-INCH STEEL	ENCASEMENT PIPE 24-INCH STEEL	NEW MANHOLES 4-FOOT DIAMETER ALL DEPTHS	DROP MANHOLES 4-FOOT DIAMETER ALL DEPTHS	TRENCH SAFETY SYSTEM	PIPE 24-INCH DI CL 200 WATER	PIPE 16-INCH DI CL 250 WATER	PIPE 8-INCH DI CL 350 WATER	PIPE 8-INCH PVC ASTM D3034 SDR-26 WASTEWATER	VALVE GATE 24-INCH DIA	VALVE GATE 16-INCH DIA	VALVE GATE 8-INCH DIA	FIRE HYDRANT
	LF	LF	EA	EA	LF	LF	LF	LF	LF	EA	EA	EA	EA
WW-1		147.14	1		179				179				
WW-2			2		500				500				
WW-3			4	1	509				509				
WW-4		93.23	1		395				395				
WW-5		51.63	1	1	393				393				
WW-6			4		283				283				
WW-7	79.21				535	127	408			2	1		1
WW-8	63.29				171		171					1	1
WW-9					508			508				2	1
TOTAL	142.5	292	13	2	3473	127	579	508	2259	2	1	3	3

REV No	DATE	DRWN	CHKD	REMARKS

DESIGNED BY: REYNOLDS
DRAWN BY: TG
SHEET CHK'D BY: REYNOLDS
CROSS CHK'D BY: WOELKE
DATE: OCTOBER 2004

CDM Camp Dresser & McKee Inc.
consulting engineering construction operations

STATE OF TEXAS
WILLIAM T. REYNOLDS
34684
REGISTERED PROFESSIONAL ENGINEER
10/6/04

CITY OF GEORGETOWN, TEXAS
HWY 29 WASTEWATER INTERCEPTOR

WATER & WW QUANTITIES SUMMARY SHEET

PROJECT No 38903C\DGN-2
FILE NAME: F-QUANT

WW-19

SHEET No 238

X-17BORD, X-SITE

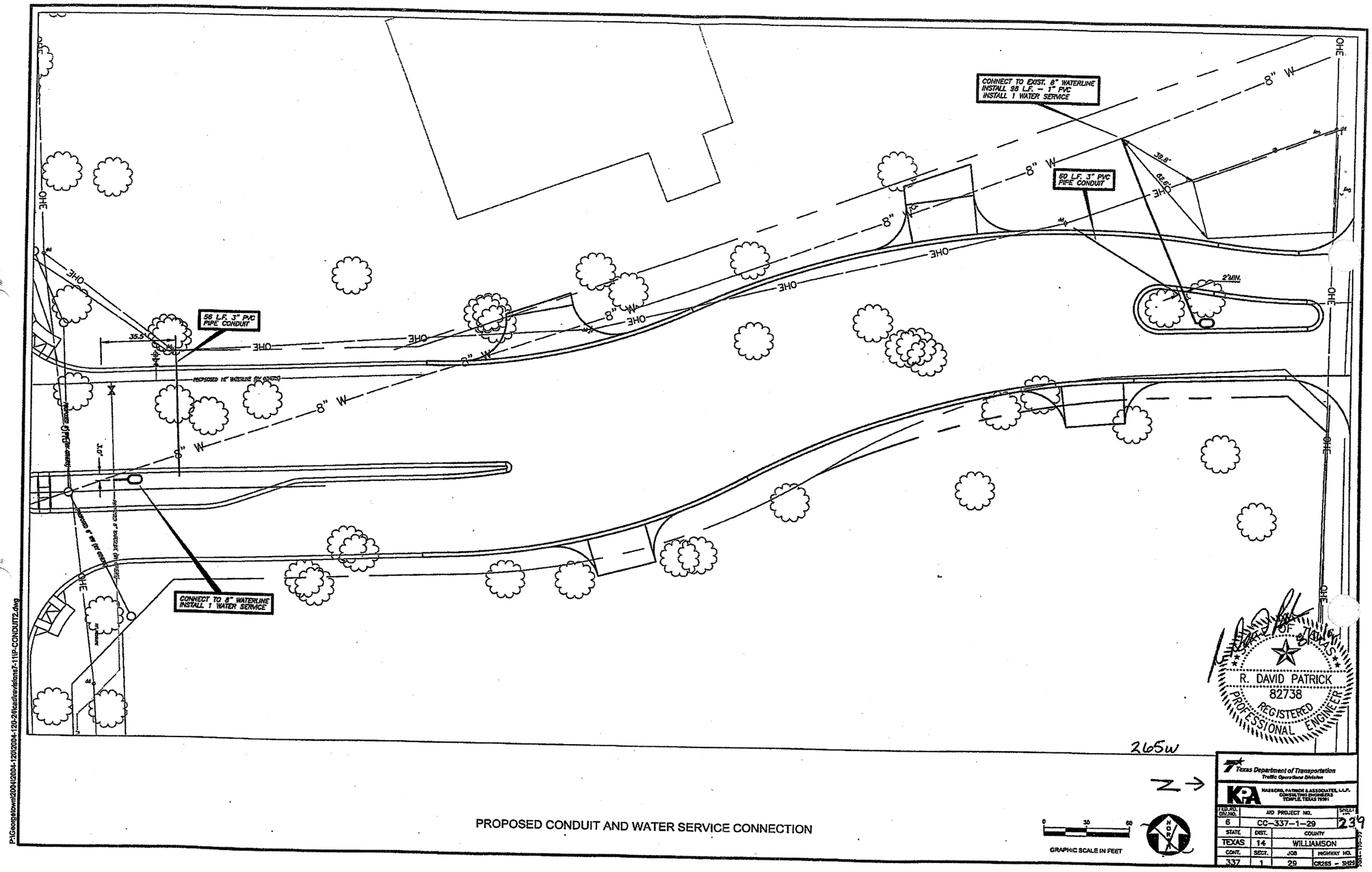

P:\Georgetown\2004\2004-120\2004-120-24\as\Revisions\7-11\P-CONDUIT2.dwg

PROPOSED CONDUIT AND WATER SERVICE CONNECTION

GRAPHIC SCALE IN FEET

265w

STATE OF TEXAS
R. DAVID PATRICK
82738
REGISTERED
PROFESSIONAL ENGINEER

Texas Department of Transportation
Traffic Operations Division

KA KASBERG, PATRICK & ASSOCIATES, L.L.P.
CONSULTING ENGINEERS
TEMPLE, TEXAS 76501

FED.RD. DIV.NO.		AID PROJECT NO.		SHEET NO.
6		CC-337-1-29		239
STATE	DIST.	COUNTY		
TEXAS	14	WILLIAMSON		
CONT.	SECT.	JOB	HIGHWAY NO.	
337	1	29	CR265 - SH29	

C.O. #6

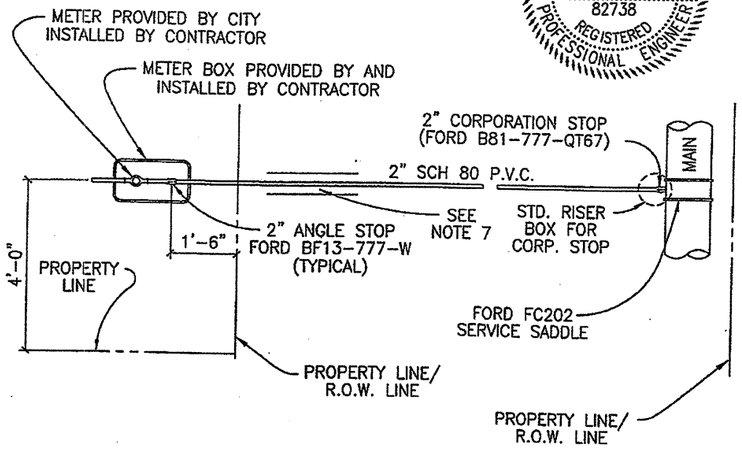

STATE OF TEXAS
R. DAVID PATRICK
82738
REGISTERED PROFESSIONAL ENGINEER
8/16/01

NOTES:

1. AUTHORIZED SERVICE LINE MATERIAL:
   A. POLYETHYLENE TUBING SDR 9. (MAX. DIA. 1") CLASS 200
   B. SCHEDULE 80, P.V.C. (DIA. LARGER THAN 1") CLASS 200
2. ANGLE STOP SHALL BE 1" MINIMUM.
3. 1" ANGLE STOPS WITH 3/4" VALVES SHALL NOT BE PERMITTED.
4. MULTIPLE SERVICE/METER INSTALLATIONS OF MORE THAN 4 METERS PER SERVICE AND SERVICE LINES LARGER THAN 2" IN DIAMETER SHALL BE HANDLED ON AN INDIVIDUAL BASIS.
5. ANGLE STOPS 1 1/2" AND 2" IN SIZE SHALL BE PROVIDED WITH BOTH A LOCKING CAP AND METER FLANGE.
6. ANGLE STOPS SHALL BE INSTALLED 8" BELOW FINISHED GRADE AND MARKED WITH A 2" X 2" X 48" TREATED WOOD STAKE, PAINTED BLUE.
7. THERE SHALL BE A 6" ENVELOPE OF 3/8" ROCK AROUND ALL SERVICE PIPE.
8. CASING REQUIREMENTS FOR SERVICE LINES CROSSING ROADWAYS SEE DETAIL W-03 NOTE #7.
9. ANY VARIATIONS ON FITTINGS MUST BE APPROVED BY THE CITY ENGINEER.
10. ALL SERVICE LINES SHALL BE PLACED 90° PERPENDICULAR TO THE ROADWAY.

ISSUE DATE: JANUARY 2003		
REVISIONS		
DATE	APPROVED	DRAWN
SCALE: N.T.S.		

CITY OF GEORGETOWN

SINGLE WATER SERVICE – PLAN

GEORGETOWN UTILITY SYSTEMS

CONSTRUCTION STANDARDS AND DETAILS

DWG. # W-04

W04.DWG

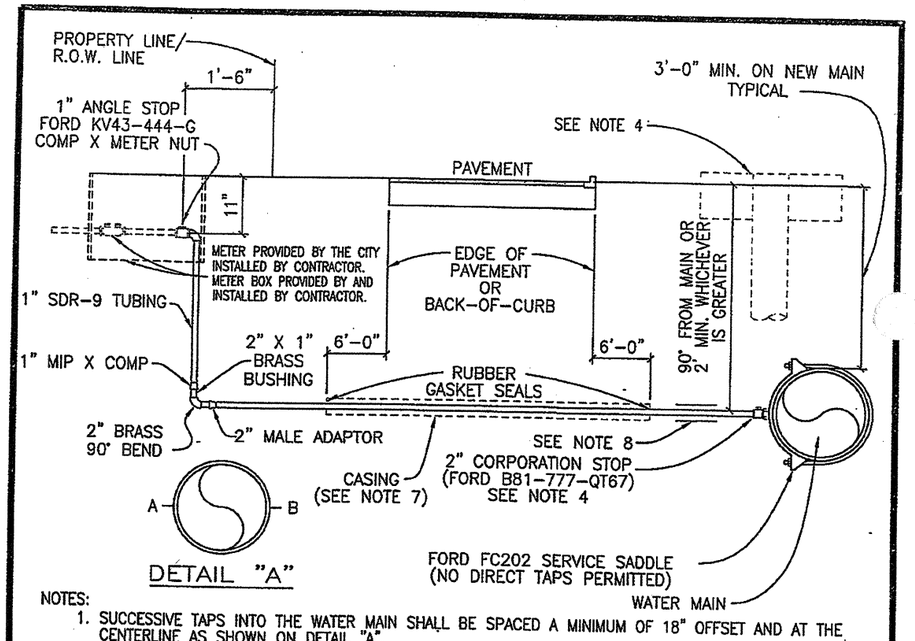

NOTES:

1. SUCCESSIVE TAPS INTO THE WATER MAIN SHALL BE SPACED A MINIMUM OF 18" OFFSET AND AT THE CENTERLINE AS SHOWN ON DETAIL "A".
2. WHERE NO SIDEWALK EXISTS, METER BOXES SHALL BE SET TO CONFORM TO FINISHED GRADE.
3. AUTHORIZED SERVICE LINE MATERIAL:
   A. POLYETHYLENE TUBING SHALL BE SDR-9. (MAX. DIA. 1") CLASS 200
   B. SCHEDULE 80, P.V.C. (DIA. LARGER THAN 1") CLASS 200
4. ROTATE THE CORPORATION STOP SO THAT THE OPERATING NUT IS ACTUATED FROM THE VERTICAL POSITION RATHER THAN THE HORIZONTAL. SEE STD. RISER FOR CORP. STOP DETAIL, (DWG # W08).
5. SERVICE LINES SHALL BE CONTINUOUS FROM CORPORATION STOP TO CORPORATION STOP WITH NO FITTINGS IN BETWEEN.
6. SERVICE CASING SHALL NOT BE INSTALLED BY WATER JETTING UNDER ROADWAY.
7. CASING REQUIRED FOR ALL PAVEMENT CROSSINGS. 4" SDR-26 REQUIRED FOR OPEN-CUT. GALVANIZED CASING PIPE REQUIRED FOR JACK AND BORE. LIMITS OF CASING SHOULD EXTEND SIX FEET BEYOND THE EDGE OF PAVEMENT OR BACK-OF-CURB.
8. THERE SHALL BE A 6" ENVELOPE OF 3/8" ROCK AROUND ALL SERVICE PIPE.
9. ANY VARIATIONS ON FITTINGS MUST BE APPROVED BY THE CITY ENGINEER.
10. METER BOX COVER TO BE CAPABLE OF HOUSING ITRON AUTOMATIC METER READING DEVICE. USE ARMOCAST PRODUCTS CO. – PART NO. A6001922-IT OR APPROVED EQUAL.
11. ALL SERVICE LINES SHALL BE PLACED 90° PERPENDICULAR TO THE ROADWAY.

ISSUE DATE: JANUARY 2003		
REVISIONS		
DATE	APPROVED	DRAWN
SCALE: N.T.S.		

CITY OF GEORGETOWN

TYP. WATER SERVICE – ELEVATION

GEORGETOWN UTILITY SYSTEMS

CONSTRUCTION STANDARDS AND DETAILS

DWG. # W-03

W03.DWG

Sheet No. 240

C.O. #6

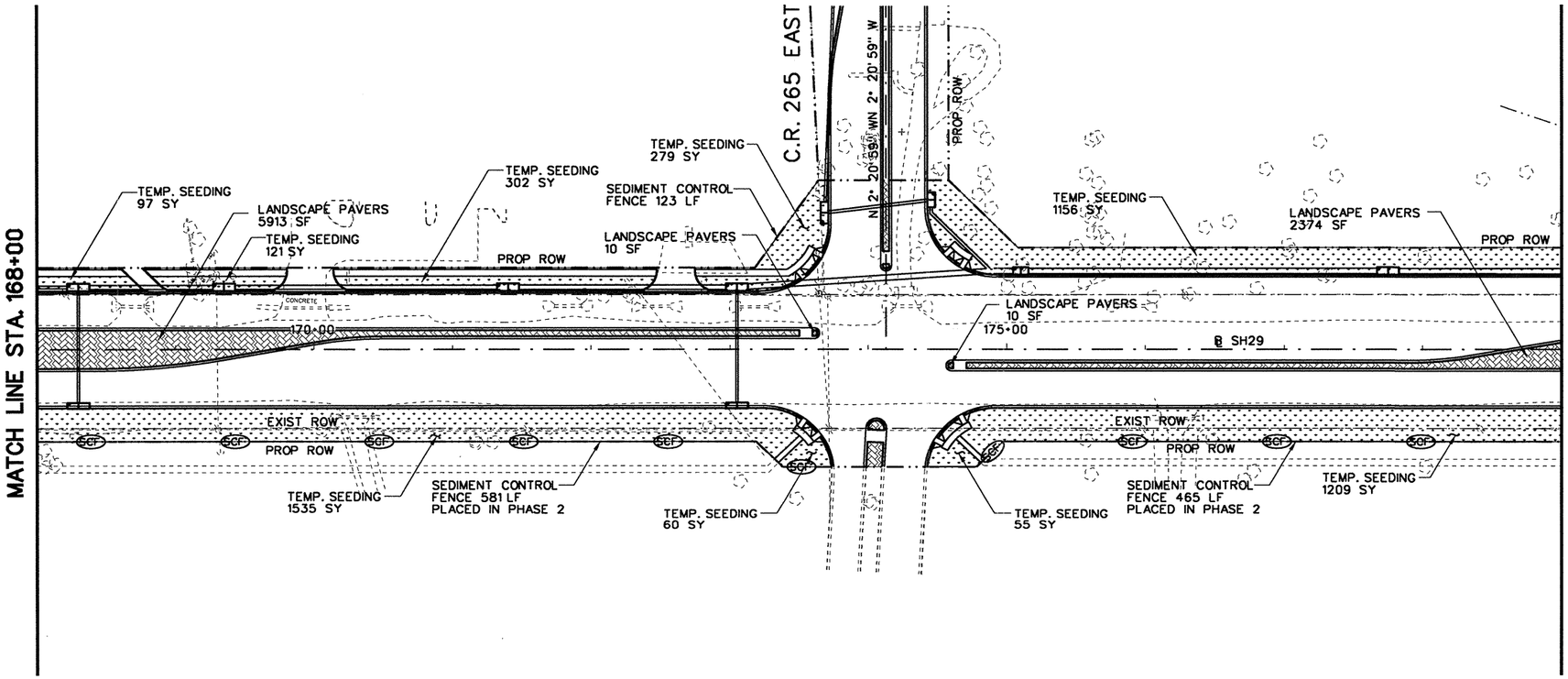

N

50 25 0 50 100

SCALE FEET

LEGEND

- SCF — SEDIMENT CONTROL FENCE
- RFD2 — TYPE 2 ROCK FILTER DAM
- SEEDING/VEGETATION
- LANDSCAPE PAVERS

NOTES:

1. ALL STRUCTURES TO BE PLACED AS SHOWN IN STANDARDS EC(1) - EC(3) AND EC(6) EXCEPT AS SHOWN IN MISCELLANEOUS DETAILS.
2. ALL PERIMETER SEDIMENT CONTROL FENCE TO REMAIN UNTIL END OF CONSTRUCTION.
3. ALL ROCK FILTER DAMS WILL BE PLACED DURING PHASE 1-1 AND WILL REMAIN UNTIL END OF CONSTRUCTION.
4. ALL INLETS ALONG WESTBOUND SH 29 WILL BE CONSTRUCTED IN PHASE 1-1.
5. ALL INLETS ALONG EASTBOUND SH 29 WILL BE CONSTRUCTED IN PHASE 2.
6. ALL INLETS WILL HAVE INLET PROTECTION UNTIL END OF CONSTRUCTION.

STATE OF TEXAS
JAMES J. ROOHMS
83383
LICENSED
PROFESSIONAL ENGINEER
9/22/2004

NO.	REVISION	BY	DATE

CP&Y Chiang, Patel & Yerby, Inc.

© 2004

Texas Department of Transportation

SH 29

EROSION CONTROL PLAN
STA. 168+00 TO STA. 179+00

		FED. ROAD DIV. NO.	STATE	FEDERAL AID PROJECT NO.				SHEET NO.
Designed:	AJW	6	TEXAS	CC 337-1-29				21
Checked:	JJR	STATE DIST. NO.	COUNTY	CONTROL NO.	SECTION NO.	JOB NO.	HIGHWAY NO.	
Drawn:	AJW	14	WILLIAMSON	0337	01	029	SH 29	
Checked:	JJR							

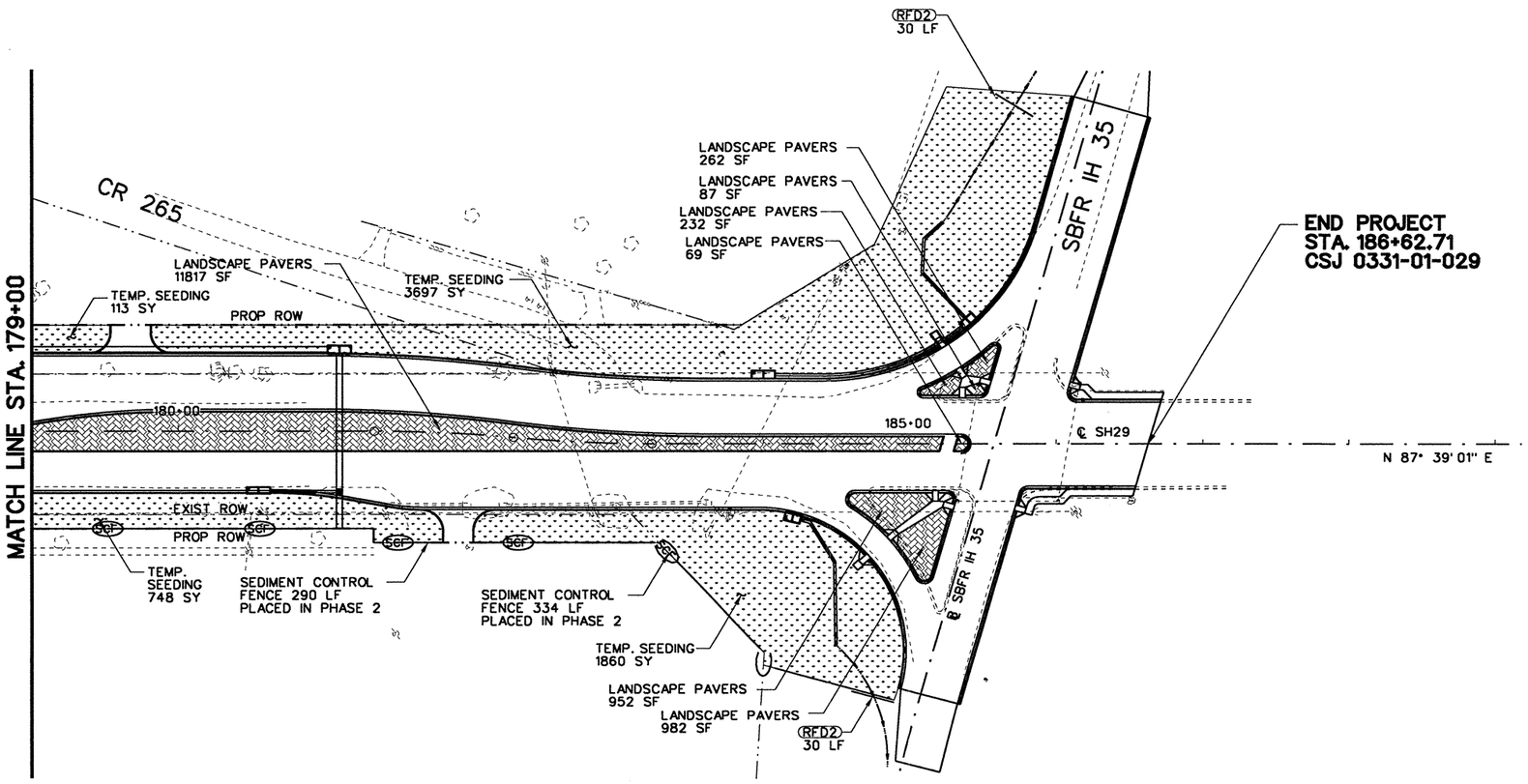

N

50 25 0 50 100

SCALE FEET

LEGEND

- SCF — SEDIMENT CONTROL FENCE
- RFD2 — TYPE 2 ROCK FILTER DAM
- SEEDING/VEGETATION
- LANDSCAPE PAVERS

NOTES:

1. ALL STRUCTURES TO BE PLACED AS SHOWN IN STANDARDS EC(1) - EC(3) AND EC(6) EXCEPT AS SHOWN IN MISCELLANEOUS DETAILS.
2. ALL PERIMETER SEDIMENT CONTROL FENCE TO REMAIN UNTIL END OF CONSTRUCTION.
3. ALL ROCK FILTER DAMS WILL BE PLACED DURING PHASE 1-1 AND WILL REMAIN UNTIL END OF CONSTRUCTION.
4. ALL INLETS ALONG WESTBOUND SH 29 WILL BE CONSTRUCTED IN PHASE 1-1.
5. ALL INLETS ALONG EASTBOUND SH 29 WILL BE CONSTRUCTED IN PHASE 2.
6. ALL INLETS WILL HAVE INLET PROTECTION UNTIL END OF CONSTRUCTION.

STATE OF TEXAS
JAMES J. ROOHMS
83383
LICENSED PROFESSIONAL ENGINEER
9/22/2004

NO.	REVISION	BY	DATE

Chiang, Patel & Yerby, Inc.

© 2004

Texas Department of Transportation

SH 29

EROSION CONTROL PLAN

STA. 179+00 TO END PROJECT

		FED. ROAD DIV. NO.	STATE	FEDERAL AID PROJECT NO.			SHEET NO.
Designed:	AJW	6	TEXAS	CC 337-1-29			2 3
Checked:	JJR						
Drawn:	AJW	STATE DIST. NO.	COUNTY	CONTROL NO.	SECTION NO.	JOB NO.	HIGHWAY NO.
Checked:	JJR	14	WILLIAMSON	0337	01	029	SH 29

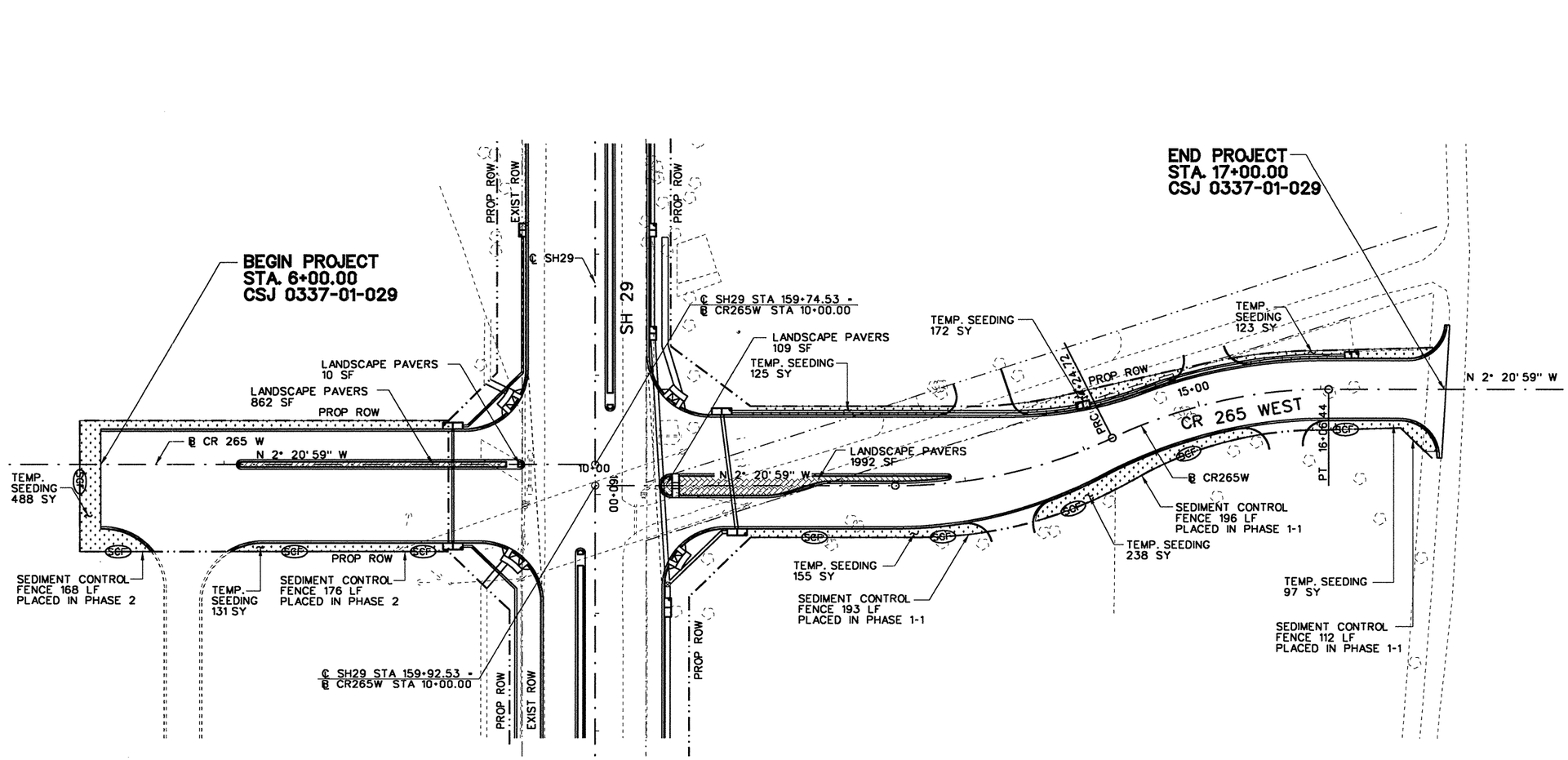

50 25 0 50 100
SCALE FEET

LEGEND

- SCF — SEDIMENT CONTROL FENCE
- RFD2 — TYPE 2 ROCK FILTER DAM
- SEEDING/VEGETATION
- LANDSCAPE PAVERS

NOTES:

1. ALL STRUCTURES TO BE PLACED AS SHOWN IN STANDARDS EC(1) - EC(3) AND EC(6) EXCEPT AS SHOWN IN MISCELLANEOUS DETAILS.
2. ALL PERIMETER SEDIMENT CONTROL FENCE TO REMAIN UNTIL END OF CONSTRUCTION.
3. ALL ROCK FILTER DAMS WILL BE PLACED DURING PHASE 1-1 AND WILL REMAIN UNTIL END OF CONSTRUCTION.
4. ALL INLETS ALONG WESTBOUND SH 29 WILL BE CONSTRUCTED IN PHASE 1-1.
5. ALL INLETS ALONG EASTBOUND SH 29 WILL BE CONSTRUCTED IN PHASE 2.
6. ALL INLETS WILL HAVE INLET PROTECTION UNTIL END OF CONSTRUCTION.

STATE OF TEXAS
JAMES J. ROOHMS
83383
LICENSED
PROFESSIONAL ENGINEER
9/22/2004

NO.	REVISION	BY	DATE

CP&Y Chiang, Patel & Yerby, Inc.

© 2004

Texas Department of Transportation

SH 29

EROSION CONTROL PLAN
CR 265 WEST

		FED. ROAD DIV. NO.	STATE	FEDERAL AID PROJECT NO.				SHEET NO.
Designed:	AJW	6	TEXAS	CC 337-1-29				24
Checked:	JJR							
Drawn:	AJW	STATE DIST. NO.	COUNTY	CONTROL NO.	SECTION NO.	JOB NO.	HIGHWAY NO.	
Checked:	JJR	14	WILLIAMSON	0337	01	029	SH 29	

...\wa3\west\common\533wsw3p06.100 09/21/2004 04:12:25 PM

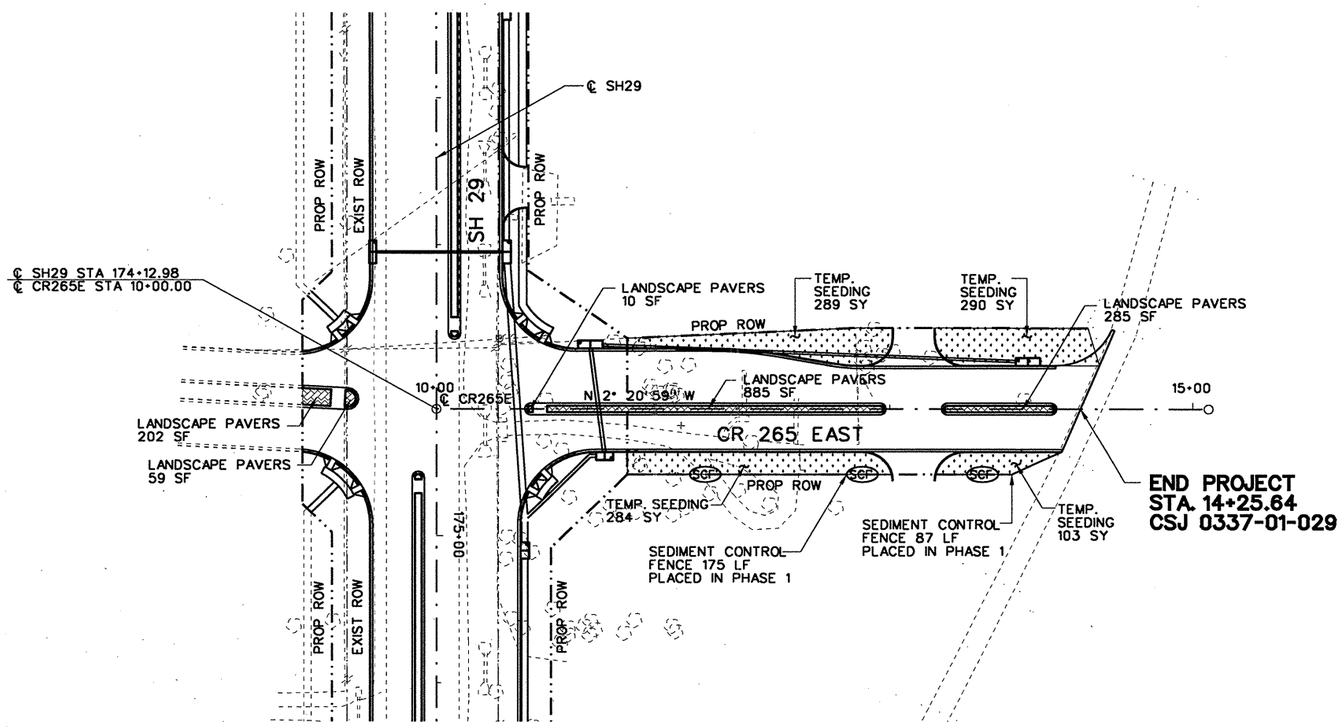

50 25 0 50 100
SCALE FEET

LEGEND

- SCF — SEDIMENT CONTROL FENCE
- RFD2 — TYPE 2 ROCK FILTER DAM
- SEEDING/VEGETATION
- LANDSCAPE PAVERS

NOTES:

1. ALL STRUCTURES TO BE PLACED AS SHOWN IN STANDARDS EC(1) - EC(3) AND EC(6) EXCEPT AS SHOWN IN MISCELLANEOUS DETAILS.
2. ALL PERIMETER SEDIMENT CONTROL FENCE TO REMAIN UNTIL END OF CONSTRUCTION.
3. ALL ROCK FILTER DAMS WILL BE PLACED DURING PHASE 1-1 AND WILL REMAIN UNTIL END OF CONSTRUCTION.
4. ALL INLETS ALONG WESTBOUND SH 29 WILL BE CONSTRUCTED IN PHASE 1-1.
5. ALL INLETS ALONG EASTBOUND SH 29 WILL BE CONSTRUCTED IN PHASE 2.
6. ALL INLETS WILL HAVE INLET PROTECTION UNTIL END OF CONSTRUCTION.

STATE OF TEXAS
JAMES J. ROOHMS
83383
LICENSED
PROFESSIONAL ENGINEER
9/21/2004

NO.	REVISION	BY	DATE

CP&Y Chiang, Patel & Yerby, Inc.

© 2004

Texas Department of Transportation

SH 29

EROSION CONTROL PLAN
CR 265 EAST

		FED. ROAD DIV. NO.	STATE	FEDERAL AID PROJECT NO.				SHEET NO.
Designed:	AJW	6	TEXAS	CC 337-1-29				25
Checked:	JJR	STATE DIST. NO.	COUNTY	CONTROL NO.	SECTION NO.	JOB NO.	HIGHWAY NO.	
Drawn:	AJW	14	WILLIAMSON	0337	01	029	SH 29	
Checked:	JJR							

APPENDIX C

ELECTRONICALLY RECORDED 2025076210
Williamson County, Texas Total Pages: 11

AUSTIN TITLE COMPANY

GF# 17013Z400736

GENERAL WARRANTY DEED

NOTICE OF CONFIDENTIALITY RIGHTS: If you are a natural person, you may remove or strike any of the following information from this instrument before it is filed for record in the public records: Your social security number or your driver's license number.

DATE: July 8, , 2025.

GRANTOR: Randolph-Brooks Federal Credit Union
a Federally chartered credit union

GRANTOR'S MAILING ADDRESS: 1 Randolph-Brooks Parkway, Live Oak, Bexar County, TX 78233

GRANTEE: City of Georgetown, a Texas home-rule municipal corporation

GRANTEE'S MAILING ADDRESS (including County): P.O. Box 409, Georgetown, Williamson County, Texas 78627

CONSIDERATION: Ten and No/100 Dollars ($10.00) and other good and valuable consideration.

PROPERTY (including any improvements):

> Being a 0.0214-acre tract of land, more or less, said tract being more fully described in **Exhibit "A"** and depicted in **Exhibit "B"**, each being attached hereto and by this reference incorporated herein (the "Property").

RESERVATIONS FROM AND EXCEPTIONS TO CONVEYANCE AND WARRANTY:

This conveyance is made, delivered and accepted subject to any and all easements, covenants, leases, rights-of-way, conditions, restrictions, outstanding mineral interests and royalty interests, if any, relating to the Property, to the extent, and only to the extent, that the same may still be in force and effect and shown in the Official Public Records of Williamson County, Texas.

Grantor, for the consideration and subject to the Reservations from and Exceptions to Conveyance and Warranty, GRANTS, SELLS, and CONVEYS to Grantee the Property, together with all and singular the rights and appurtenances thereto in any way belonging, to have and hold it to Grantee and Grantee's heirs, successors and assigns forever. Grantor binds Grantor and Grantor's heirs, successors and assigns to warrant and forever defend all and singular the Property to Grantee and Grantee's heirs, successors, and assigns against

Unofficial Document

every person whomsoever lawfully claiming or to claim the same or any part thereof, except as to the Reservations from and Exceptions to Conveyance and Warranty.

GRANTOR:

Randolph-Brooks Federal Credit Union,
a Federally chartered credit union

By: _____

Name: Zach Crews
Title: Chief Financial Officer

STATE OF TEXAS §
§
COUNTY OF BEXAR §

This instrument was acknowledged before me on this the 8 day of JULY, 2025, by Zach Crews, Chief Financial Officer of Randolph-Brooks Federal Credit Union, a Federally chartered credit union, on behalf of said entity.

MELISSA KYLE
Notary Public, State of Texas
My Comm. Exp. 04-07-2028
ID No. 13061187-2

_____
Notary Public, State of Texas

APPROVED AS TO FORM:

_____
Andrew Culpepper, Assistant City Attorney

AFTER RECORDING RETURN TO:
City of Georgetown
Attn: Real Estate Services
P.O. Box 409
Georgetown, Texas 78627

Unofficial Document

EXHIBIT "A"

County: Williamson
Highway: S.H. 29
Limits: From 0.161 Miles West of Wolf Ranch Parkway To I.H. 35
CCSJ: 0337-01-053
Parcel No.: 1

April 5, 2024

PROPERTY DESCRIPTION FOR PARCEL 1

DESCRIPTION OF A 0.0214 ACRE (934 SQ. FT.) PARCEL OF LAND LOCATED IN THE C. STUBBLEFIELD SURVEY, ABSTRACT NO. 558, WILLIAMSON COUNTY, TEXAS, BEING A PORTION OF LOT 7, BLOCK "A", WOLF RANCH SUBDIVISION, AS RECORDED IN CABINET Y, SLIDES 112-115, PLAT RECORDS OF WILLIAMSON COUNTY, TEXAS (P.R.W.C.TX.), AS DESCRIBED IN A DEED TO RANDOLPH BROOKS FEDERAL CREDIT UNION, RECORDED MARCH 23, 2016 IN DOCUMENT NO. 2016023826, OFFICIAL PUBLIC RECORDS OF WILLIAMSON COUNTY, TEXAS (O.P.R.W.C.TX.); SAID 0.0214 ACRE (934 SQ. FT.) PARCEL, AS SHOWN ON A PLAT PREPARED BY SAM, LLC, BEING MORE PARTICULARLY DESCRIBED BY METES AND BOUNDS AS FOLLOWS:

COMMENCING at a mag nail with a shiner stamped "Bury & Partners" found 333.51 feet right of State Highway (S.H.) 29 Engineer's Centerline Station (E.C.S.) 162+48.99 on the east line of said Lot 7, for the southwest corner of Lot 4-G, Block "A", Final Plat of Lot 4-F & 4-G, Block A, Wolf Ranch Subdivision, a Resubdivision of Block "A", Lot 4-E of the Resubdivision of Block "A", Lot 4D, as recorded in Document No. 2015084207, O.P.R.W.C.TX., as described in a deed as Tract 3 to WPG Wolf Ranch, LLC, recorded June 12, 2014 in Document No. 2014044665, O.P.R.W.C.TX., same being the most westerly northwest corner of Lot 3, Block "A", Wolf Ranch Subdivision, as recorded in Cabinet Y, Slides 112-115, P.R.W.C.TX., described in a deed to Target Corporation, recorded in Document No. 2003124159, O.P.R.W.C.TX.;

THENCE, North 02°13'01" West, departing the north line of said Lot 3, with the east line of said Lot 7 and the west line of said Lot 4-G, a distance of **258.51 feet** to a 5/8-inch iron rod with a 2-inch aluminum cap stamped "Texas Department of Transportation (TXDOT)" set (Surface Coordinates: N=10,204,790.32, E=3,125,176.97) 75.00 feet right of S.H. 29 E.C.S. 162+49.59 on the proposed south right-of-way line of S.H. 29, for the southeast corner and **POINT OF BEGINNING** of the parcel described herein;

1) **THENCE**, **South 87°39'07" West**, departing the common line of said Lot 7 and said Lot 4-G, with the proposed south right-of-way line of said S.H. 29, over and across said Lot 7, a distance of **158.58 feet** to a TXDOT Type II bronze disk set in concrete 75.00 feet right of S.H. 29 E.C.S.160+91.00 on the existing east right-of-way line of Wolf Ranch Parkway, a 110-foot-wide right-of-way, per plat recorded in Cabinet Y, Slides 112-115, P.R.W.C.TX., for the southwest corner of the parcel described herein;

2) **THENCE**, **North 42°29'12" East**, departing the proposed south right-of-way line of said S.H. 29, with the existing east right-of-way line of said Wolf Ranch Parkway, a distance of **8.46 feet** to a calculated point on the existing south right-of-way line of S.H. 29, a variable width right-of-way, as dedicated in said plat recorded in Cabinet Y, Slides 112-115, P.R.W.C.TX., and as depicted in TXDOT R.O.W. Strip Map CSJ No. 0337-01-023, for the northerly northwest corner of said Lot 7 and the northwest corner of the parcel described herein;

3) **THENCE**, **North 87°39'07" East**, departing the existing east right-of-way line of said Wolf Ranch Parkway, with the existing south right-of-way line of said S.H. 29, a distance of **152.63 feet** to a calculated point, for the northwest corner of said Lot 4-G, same being the northeast corner of said Lot 7 and of the parcel described herein;

THIS SPACE INTENTIONALLY LEFT BLANK

Unofficial Document

EXHIBIT "A"

County: Williamson
Highway: S.H. 29
Limits: From 0.161 Miles West of Wolf Ranch Parkway To I.H. 35
CCSJ: 0337-01-053
Parcel No.: 1

4) **THENCE**, **South 02°13'01" East**, departing the existing south right-of-way line of said S.H. 29, with the east line of said Lot 7 and the west line of said Lot 4-G, a distance of **6.00 feet** to the **POINT OF BEGINNING**, and containing 0.0214 acres (934 sq. ft.) of land.

Bearing Basis:
All bearings shown are based on NAD83/2011 Texas Coordinate System, Central Zone (4203). All distances shown are surface and may be converted to grid by dividing by a Surface Adjustment Factor of 1.00011. All coordinates shown are in surface and may be converted by dividing by the same factor. Project units are in U.S. Survey Feet.

THE STATE OF TEXAS §
§ KNOW ALL MEN BY THESE PRESENTS:
COUNTY OF TRAVIS §

That I, Scott C. Brashear, a Registered Professional Land Surveyor, do hereby certify that the above description is true and correct to the best of my knowledge and belief and that the property described herein was determined by a survey made on the ground under my direction and supervision.

WITNESS MY HAND AND SEAL at Austin, Travis County, Texas, on the date shown below.

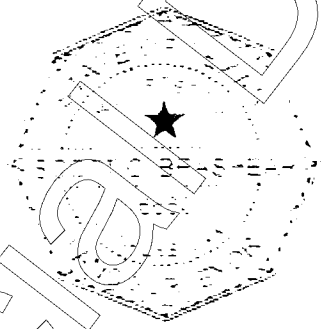

SURVEYING AND MAPPING, LLC
4801 Southwest Pkwy
Building Two, Suite 100
Austin, Texas 78735
TX. Firm No. 10064300

Scott C. Brashear 4/5/2024
Scott C. Brashear Date
Registered Professional Land Surveyor
No. 6660 – State of Texas

Unofficial Document

EXHIBIT "B"

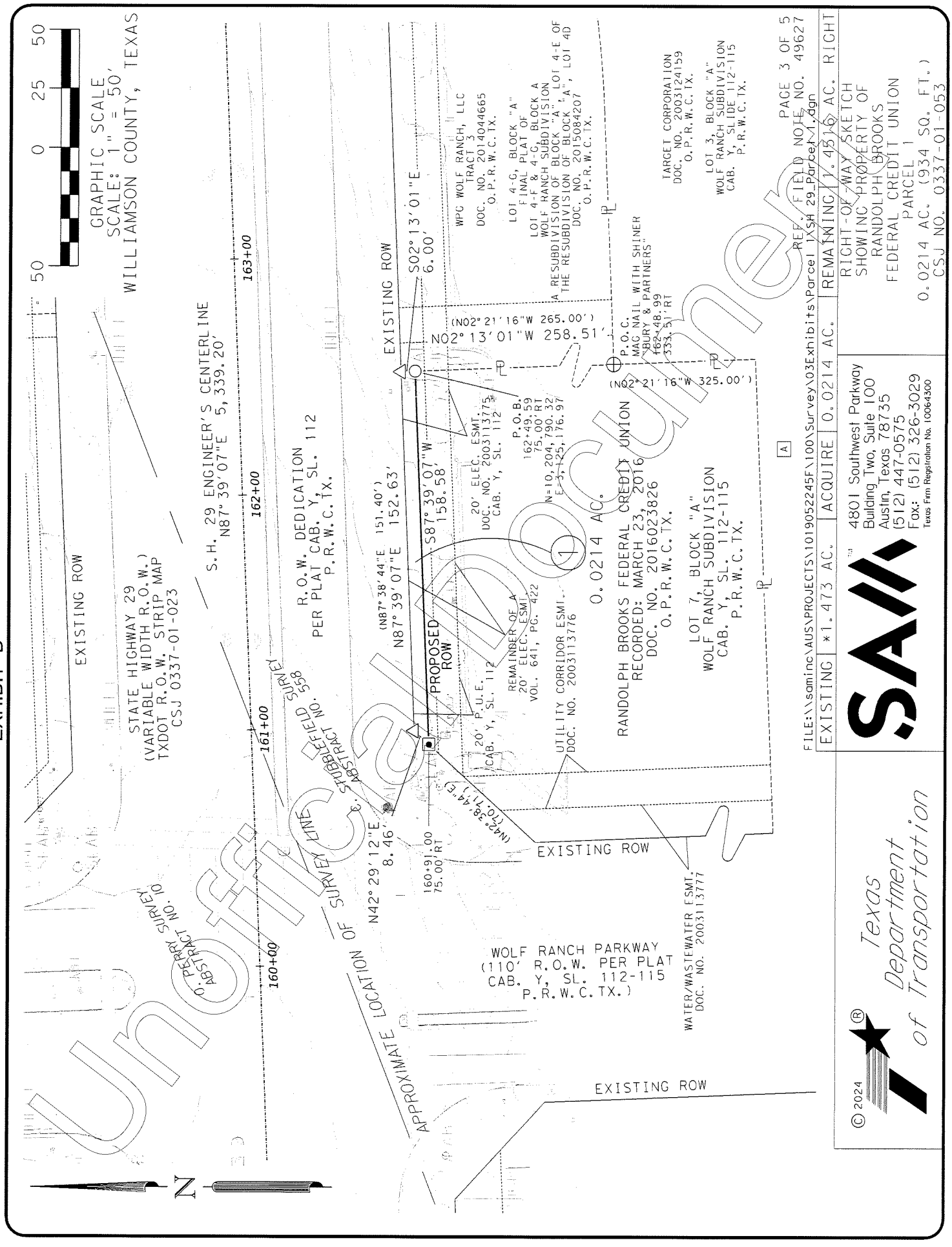

RECORDERS MEMORANDUM
All or parts of the text on this page was not clearly legible for satisfactory recordation

SCHEDULE B:

THIS SURVEY HEREON WAS PREPARED IN CONJUCTION WITH THAT COMMITMENT FOR TITLE INSURANCE GF NO. 24-779244-GT, ISSUED BY FIRST NATIONAL TITLE INSURANCE COMPANY, EFFECTIVE DATE JANUARY 18, 2024, AND ISSUED DATE JANUARY 26, 2024.

10. THE FOLLOWING MATTERS AND ALL TERMS OF THE DOCUMENTS CREATING OR OFFERING EVIDENCE OF THE MATTERS (WE MUST INSERT MATTERS OR DELETE THIS EXCEPTION.):

A. ALL LEASES, GRANTS, EXCEPTIONS OR RESERVATIONS OF COAL, LIGNITE, OIL, GAS AND OTHER MINERALS, TOGETHER WITH ALL RIGHTS, PRIVILEGES AND IMMUNITIES RELATING THERETO, APPEARING IN THE PUBLIC RECORDS WHETHER LISTED IN SCHEDULE B OR NOT. THERE MAY BE LEASES, GRANTS, EXCEPTIONS OR RESERVATIONS OF MINERAL INTEREST THAT ARE NOT LISTED.

B. ALL LEASES, GRANTS, EXCEPTIONS OR RESERVATIONS OF THE GEOTHERMAL ENERGY AND ASSOCIATED RESOURCES BELOW THE SURFACE OF THE LAND, TOGETHER WITH ALL RIGHTS, PRIVILEGES, AND IMMUNITIES RELATING THERETO, APPEARING IN THE PUBLIC RECORDS WHETHER LISTED IN SCHEDULE B OR NOT. THERE MAY BE LEASES, GRANTS, EXCEPTIONS OR RESERVATIONS OF THE GEOTHERMAL ENERGY AND ASSOCIATED RESOURCES BELOW THE SURFACE OF THE LAND THAT ARE NOT LISTED.

C. ALL VISIBLE AND APPARENT EASEMENTS OR USES AND ALL UNDERGROUND EASEMENTS OR USES, THE EXISTENCE OF WHICH MAY ARISE BY UNRECORDED GRANT OR BY USE.

D. RIGHTS OF PARTIES IN POSSESSION.

E. RIGHTS OF TENANTS, AS TENANTS ONLY, UNDER UNRECORDED LEASES OR RENTAL AGREEMENTS.

F. THE FOLLOWING EASEMENT(S) AND/OR BUILDING LINE(S) AFFECTING THE SUBJECT PROPERTY AS SHOWN ON MAP OR PLAT RECORDED IN CABINET Y, SLIDE 112, MAP OR PLAT RECORDS, WILLIAMSON COUNTY, TEXAS:

A 20 FOOT PUBLIC UTILITY EASEMENT ALONG THE NORTH PROPERTY LINE. (AFFECTS PARCEL AS SHOWN)

A 20 FOOT GATEWAY/LANDSCAPE EASEMENT ALONG THE NORTH PROPERTY LINE. (AFFECTS PARCEL AS SHOWN)

85.50 FOOT BY 201.40 FOOT ACCESS EASEMENT ALONG THE SOUTH PROPERTY LINE. (DOES NOT AFFECT)

G. RIGHT OF WAY AND EASEMENT BY AND BETWEEN JAY L. WOLF AND WIFE, BETTY WOLF, TO THE CITY OF GFORGETOWN, DATED APRIL 28, 1976, AND RECORDED JULY 22, 1976, IN/UNDER VOLUME 641, PAGE 422, OF THE REAL PROPERTY RECORDS OF WILLIAMSON COUNTY, TEXAS; AFFECTING THE NORTH 10 FEET OF SUBJECT PROPERTY AS REFLECTED BY THE RECORDED PLAT. (DOES NOT AFFECT)

H. ELECTRIC EASEMENT GRANTED TO THE CITY OF GEORGETOWN, TEXAS, AS SET FORTH AND DESCRIBED UNDER CLERK'S FILE NO. 2003113775, OFFICIAL PUBLIC RECORDS, WILLIAMSON COUNTY, TEXAS. (AFFECTS PARCEL AS SHOWN)

I. THE TERMS, PROVISIONS, EASEMENTS, COVENANTS, RESTRICTIONS AND LIEN FOR ASSESSMENTS AS SHOWN IN RESTRICTIONS RECORDED IN 2016000724, REAL PROPERTY RECORDS, WILLIAMSON COUNTY, TEXAS; WHEN TAKEN WITH ALL AMENDMENTS AND/OR SUPPLEMENTS THERETO. (MAY AFFECT)

J. TERMS, CONDITIONS AND STIPULATIONS CONTAINED IN THAT CERTAIN ACCESS AND UTILITY EASEMENT AGREEMENT, DATED OCTOBER 20, 2011 AND RECORDED UNDER INSTRUMENT NO. 2011070960, OFFICIAL PUBLIC RECORDS, WILLIAMSON COUNTY, TEXAS. (MAY AFFECT)

K. TERMS, CONDITIONS AND STIPULATIONS CONTAINED IN THAT CERTAIN ACCESS EASEMENT AGREEMENT, DATED DECEMBER 30, 2015, AND RECORDED UNDER INSTRUMENT NO. 2016000725, OFFICIAL PUBLIC RECORDS, WILLIAMSON COUNTY, TEXAS. (MAY AFFECT)

L. UTILITY CORRIDOR EASEMENT EXECUTED BY BETTIE M. WOLF ET AL TO CITY OF GEORGETOWN, DATED NOVEMBER 21, 2003, RECORDED IN DOCUMENT NO. 2003113776, OFFICIAL PUBLIC RECORDS OF WILLIAMSON COUNTY, TEXAS AND AS SHOWN ON PLAT RECORDED IN CABINET Y, PAGE 112, PLAT RECORDS OF WILLIAMSON COUNTY, TEXAS. (DOES NOT AFFECT)

M. WATER/WASTEWATER EASEMENT EXECUTED BY BETTIE M. WOLF ET ALTO CITY OF GEORGETOWN, DATED NOVEMBER 21, 2003, RECORDED IN DOCUMENT NO. 2003113777, OFFICIAL PUBLIC RECORDS OF WILLIAMSON COUNTY, TEXAS AND AS SHOWN ON PLAT RECORDED IN CABINET Y, PAGE 112, PLAT RECORDS OF WILLIAMSON COUNTY, TEXAS. (DOES NOT AFFECT)

N. SUBJECT TO THE RIGHTS OF THIRD PARTIES IN AND TO THAT CERTAIN 201.40 FOOT BY 85.50 FOOT ACCESS EASEMENT ALONG THE SOUTH LOT LINE AS SHOWN ON PLAT RECORDED IN CABINET Y, PAGE(S) 112-113, PLAT RECORDS OF WILLIAMSON COUNTY, TEXAS. (DOES NOT AFFECT)

O. ORDINANCE NO. 2004-46, DATED JULY 27, 2004, RECORDED IN DOCUMENT NO. 2005068647, OFFICIAL PUBLIC RECORDS OF WILLIAMSON COUNTY, TEXAS. (DOES NOT AFFECT)

P. MINERALS RESERVED IN THAT DEED FILED UNDER CLERK'S FILE NO. 2016001223, OFFICIAL PUBLIC RECORDS OF WILLIAMSON COUNTY, TEXAS; SURFACE RIGHTS WAIVED THEREIN. THE COMPANY MAKES NO REPRESENTATION AS TO THE PRESENT OWNERSHIP OF THIS INTEREST. (MAY AFFECT)

Q. ANY AND ALL MATTERS WHICH WOULD BE SHOWN ON A CURRENT, CORRECT SURVEY OF THE PROPERTY.

Unofficial Document

REF. FIELD NOTE NO. 49627

FILE:\\saminc\AUS\PROJECTS\1019052245F\100\Survey\03Exhibits\Parcel 1\SH 29_Parcel 1.dgn

EXISTING	*1.473 AC.	ACQUIRE	0.0214 AC.	REMAINING	1.4516 AC. RIGHT

© 2024

Texas Department of Transportation

SAM
4801 Southwest Parkway
Building Two, Suite 100
Austin, Texas 78735
(512) 447-0575
Fax: (512) 326-3029
Texas Firm Registration No. 10064300

RIGHT-OF-WAY SKETCH
SHOWING PROPERTY OF
RANDOLPH BROOKS
FEDERAL CREDIT UNION
PARCEL 1
0.0214 AC. (934 SQ. FT.)
CSJ NO. 0337-01-053

LEGEND

■	TYPE I CONCRETE MONUMENT FOUND
◎	TYPE II BRONZE DISK IN CONCRETE FOUND
⊙	TYPE II BRONZE DISK IN CONCRETE SET
○	5/8" IRON ROD SET WITH TXDOT ALUMINUM CAP
●	5/8" IRON ROD FOUND (AS NOTED)
⊕	NAIL FOUND (AS NOTED)
⬡	FENCE POST (TYPE NOTED)
△	CALCULATED POINT
℄	PROPERTY LINE
( )	RECORD INFORMATION
P.O.B.	POINT OF BEGINNING
P.O.C.	POINT OF COMMENCING
P.O.R.	POINT OF REFERENCE
N.T.S.	NOT TO SCALE
P.R.W.C.TX.	PLAT RECORDS OF WILLIAMSON COUNTY, TEXAS
O.P.R.W.C.TX.	OFFICIAL PUBLIC RECORDS OF WILLIAMSON COUNTY, TEXAS
	DISTANCE NOT TO SCALE
	DEED LINE (COMMON OWNERSHIP)
	PROPERTY LINE
	EXISTING RIGHT-OF-WAY
	PARCEL LIMITS
	PROPOSED DRAINAGE EASEMENT
	EXISTING EASEMENT LINE

N

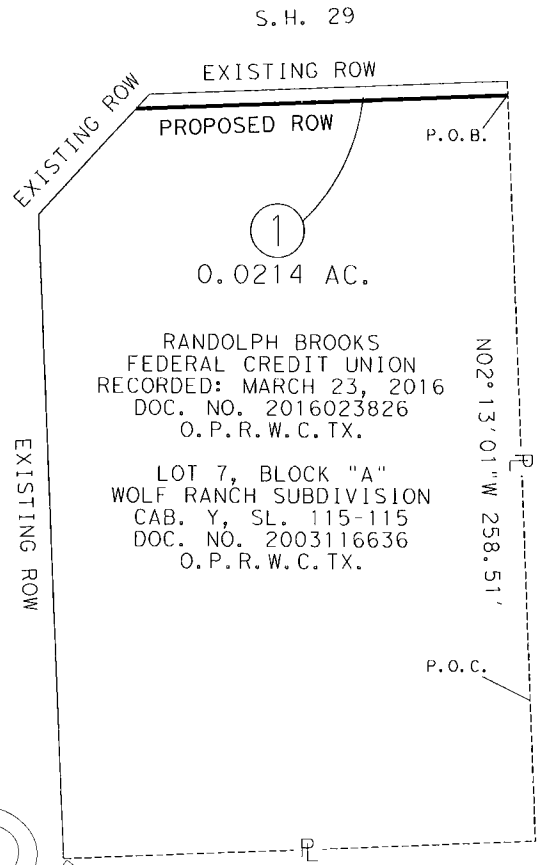

PARENT TRACT INSET
N.T.S.

[A] WOLF RANCH APARTMENTS, LLC
DOC. NO. 2021133059
O.P.R.W.C.TX.

LOT 1, BLOCK B
FINAL PLAT OF
WOLF RANCH WEST, SECTION 1B
DOC. NO. 2016064444
O.P.R.W.C.TX.

NOTES:

1. ALL PROJECT COORDINATES AND BEARINGS ARE GRID NORTH BASED ON THE TEXAS COORDINATE SYSTEM, CENTRAL ZONE (4203), NAD 83 (2011), EPOCH 2010.0. ALL SURFACE COORDINATES SHOWN HEREON MAY BE CONVERTED TO GRID BY DIVIDING BY A SURFACE ADJUSTMENT FACTOR OF 1.00011. UNITS: U.S. SURVEY FEET. SURVEY DATE: AUGUST, 2023

2. THIS SURVEY WAS COMPLETED WITH THE BENEFIT OF TITLE REPORT, PROVIDED BY FIRST NATIONAL TITLE INSURANCE COMPANY, GF NO. 24-779244-GT, EFFECTIVE DATE JANUARY 18, 2024, AND ISSUED DATE JANUARY 26, 2024. THERE MAY BE EASEMENTS OR OTHER MATTERS, RECORDED OR UNRECORDED, THAT ARE NOT SHOWN.

3. A PROPERTY DESCRIPTION OF EVEN DATE WAS PREPARED IN CONJUNCTION WITH THIS PARCEL PLAT.

* AREA CALCULATED BY SAM, LLC.

I HEREBY CERTIFY THAT THIS SURVEY WAS MADE ON THE GROUND UNDER MY DIRECTION AND SUPERVISION AND THAT THIS PLAT IS TRUE AND CORRECT TO THE BEST OF MY KNOWLEDGE AND BELIEF.

SCOTT C. BRASHEAR
REGISTERED PROFESSIONAL LAND SURVEYOR
NO. 6660, STATE OF TEXAS

4/5/2024
DATE

PAGE 5 OF 5
REF. FIELD NOTE NO. 49627

FILE:\\saminc\AUS\PROJECTS\1019052245F\100\Survey\03Exhibits\Parcel 1\SH 29_Parcel 1.dgn

EXISTING	*1.473 AC.	ACQUIRE	0.0214 AC.	REMAINING	1.4516 AC. RIGHT

© 2024

Texas Department of Transportation

SAM
4801 Southwest Parkway
Building Two, Suite 100
Austin, Texas 78735
(512) 447-0575
Fax: (512) 326-3029
Texas Firm Registration No. 10064300

RIGHT-OF-WAY SKETCH
SHOWING PROPERTY OF
RANDOLPH BROOKS
FEDERAL CREDIT UNION
PARCEL 1
0.0214 AC. (934 SQ. FT.)
CSJ NO. 0337-01-053

Unofficial Document

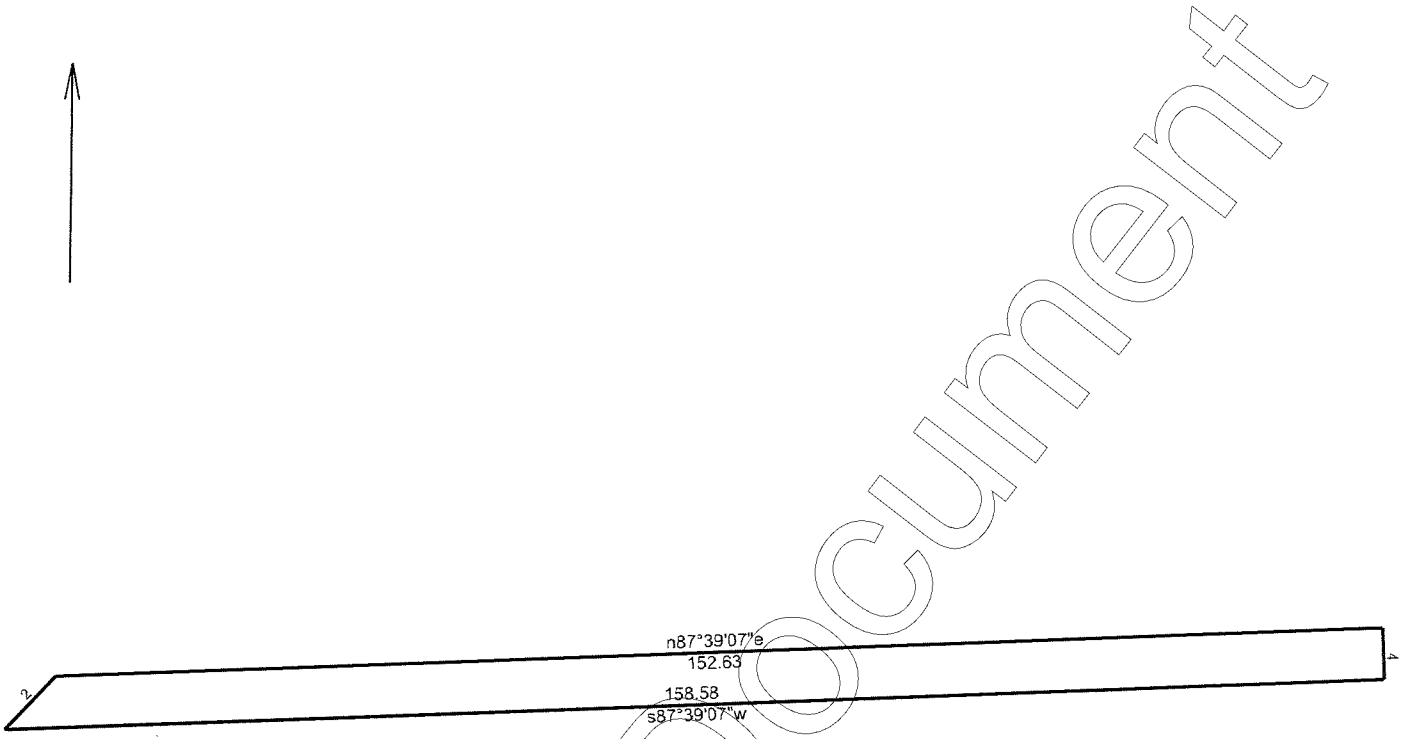

Unofficial Document

Parcel 1 Description Map Check	9/18/2023
Scale: 1 inch= 21 feet	File: Parcel 1_Description.ndp

Tract 1: 0.0214 Acres (934 Sq. Feet), Closure: n00.0000e 0.00 ft. (1/254606), Perimeter=326 ft.

01 s87.3907w 158.58
02 n42.2912e 8.46
03 n87.3907e 152.63
04 s02.1301e 6.00

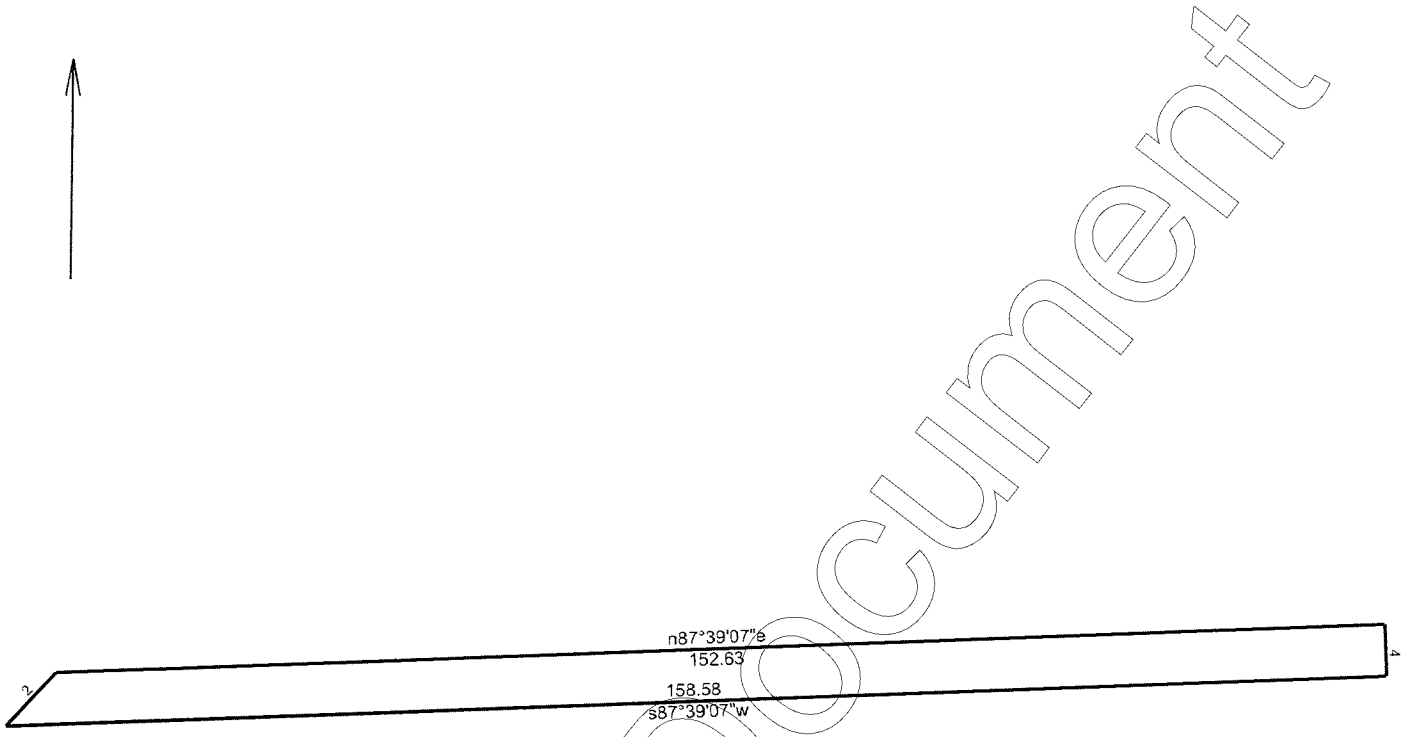

Unofficial Document

Parcel 1 Plat Map Check

9/18/2023

Scale: 1 inch= 21 feet | File: Parcel 1_Plat.ndp

Tract 1: 0.0214 Acres (934 Sq. Feet), Closure: n00.0000e 0.00 ft. (1/254606), Perimeter=326 ft.

01 s87.3907w 158.58
02 n42.2912e 8.46
03 n87.3907e 152.63
04 s02.1301e 6.00

Map Check Report

Project: Default
Alignment: Parcel 1
Description:

Type	Point Name\ Direction	Length	Northing\ Latitude	Easting\ Departure
POT	( )		10204790.32	3125176.97
	S87°39'07"W	158.58	-6.50	-158.45
PI	( )		10204783.82	3125018.53
	N42°29'12"E	8.46	6.24	5.71
PI	( )		10204790.06	3125024.24
	N87°39'07"E	152.63	6.25	152.50
PI	( )		10204796.31	3125176.74
	S02°13'01"E	6.00	-6.00	0.23
POT	( )		10204790.32	3125176.97

Northing Error: 0.00 ft
Easting Error: 0.00 ft
Closing Direction: S00°00'00"W
Closing Distance: 0.00 ft
Closed Area: 934 sq ft (0.0214 ac)
Perimeter: 325.67 ft
Precision: 213170441056 : 1

Unofficial Document

ELECTRONICALLY RECORDED
OFFICIAL PUBLIC RECORDS

2025076210

Pages: 11 Fee: $65.00
09/26/2025 01:38 PM
OSALINAS



Nancy E. Rister, County Clerk
Williamson County,Texas

Unofficial Document

ELECTRONICALLY RECORDED 2025078549
Williamson County, Texas Total Pages: 8

SPECIAL WARRANTY DEED

AUSTIN TITLE COMPANY

GF# 1701342400737

NOTICE OF CONFIDENTIALITY RIGHTS: If you are a natural person, you may remove or strike any of the following information from this instrument before it is filed for record in the public records: Your social security number or your driver's license number.

DATE: April 1, 2025

GRANTOR: WPG Wolf Ranch, LLC, a Delaware limited liability company

GRANTOR'S MAILING ADDRESS (including County): 4900 E. Dublin Granville Rd., Columbus, Franklin County, OH 43081

GRANTEE: City of Georgetown, a Texas home-rule municipal corporation

GRANTEE'S MAILING ADDRESS (including County): P.O. Box 409, Georgetown, Williamson County, Texas 78627

CONSIDERATION: Ten and No/100 Dollars ($10.00) and other good and valuable consideration.

PROPERTY (including any improvements):

> Being a 0.0258 acre (1,122 square foot) parcel of land, more or less, said parcel being more fully described in **Exhibit "A"** and depicted in **Exhibit "B"**, each being attached hereto and by this reference incorporated herein (the "Property").

RESERVATIONS FROM AND EXCEPTIONS TO CONVEYANCE AND WARRANTY:

This conveyance is made, delivered and accepted subject to any and all easements, covenants, leases, rights-of-way, conditions, restrictions, outstanding mineral interests and royalty interests, if any, relating to the Property, to the extent, and only to the extent, that the same may still be in force and effect and shown in the Official Public Records of Williamson County, Texas.

Grantor, for the consideration and subject to the Reservations From and Exceptions to Conveyance and Warranty, GRANTS, SELLS, and CONVEYS to Grantee the Property, together with all and singular the rights and appurtenances thereto in any way belonging, to have and hold it to Grantee and Grantee's heirs, successors and assigns forever. Grantor binds Grantor and Grantor's heirs, successors and assigns to warrant and forever defend all and singular the Property to Grantee and Grantee's heirs, successors, and assigns against

every person whomsoever lawfully claiming or to claim the same or any part thereof, by, through, or under Grantor, but not otherwise, except as to the Reservations From and Exceptions to Conveyance and Warranty.

GRANTOR:

WPG Wolf Ranch, LLC, a Delaware limited liability company

By: Maria Manley-Dutton
Name: Maria Manley-Dutton
Title: EVP, Chief Legal Officer & Secretary

STATE OF OHIO)
)
COUNTY OF FRANKLIN)

ACKNOWLEDGEMENT

This instrument was acknowledged before me on the 1st day of April, 2025 by Maria Manley-Dutton, EVP, Chief Legal Officer and Secretary of WPG Wolf Ranch, LLC, a Delaware limited liability company.

Notary Public, State of Ohio

LILLY GARTNER, NOTARY PUBLIC-STATE OF OHIO
MY COMMISSION EXPIRES 01/02/2028

AFTER RECORDING RETURN TO:
City of Georgetown
Attn: Real Estate Services
P.O. Box 409
Georgetown, Texas 78627

EXHIBIT "A"

County: Williamson
Highway: S.H. 29
Limits: From 0.161 Miles West of Wolf Ranch Parkway To I.H. 35
CCSJ: 0337-01-053
Parcel No.: 2

April 5, 2024

PROPERTY DESCRIPTION FOR PARCEL 2

DESCRIPTION OF A 0.0258 ACRE (1,122 SQ. FT.) PARCEL OF LAND LOCATED IN THE C. STUBBLEFIELD SURVEY, ABSTRACT NO. 558, WILLIAMSON COUNTY, TEXAS, BEING A PORTION OF LOT 4-G, BLOCK "A", FINAL PLAT OF LOT 4-F & 4-G, BLOCK A, WOLF RANCH SUBDIVISION, A RESUBDIVISION OF BLOCK "A", LOT 4-E OF THE RESUBDIVISION OF BLOCK "A", LOT 4D, AS RECORDED IN DOCUMENT NO. 2015084207, OFFICIAL PUBLIC RECORDS OF WILLIAMSON COUNTY, TEXAS (O.P.R.W.C.TX.), DESCRIBED IN A DEED AS TRACT 3 TO WPG WOLF RANCH, LLC, RECORDED JUNE 12, 2014 IN DOCUMENT NO. 2014044665, O.P.R.W.C.TX.; SAID 0.0258 ACRE (1,122 SQ. FT.) PARCEL, AS SHOWN ON A PLAT PREPARED BY SAM, LLC, BEING MORE PARTICULARLY DESCRIBED BY METES AND BOUNDS AS FOLLOWS:

COMMENCING at a mag nail with a shiner stamped "Bury & Partners" found 333.51 feet right of State Highway (S.H.) 29 Engineer's Centerline Station (E.C.S.) 162+48.99 on the east line of Lot 7, Block "A", Wolf Ranch Subdivision, as recorded in Cabinet Y, Slides 112-115, Plat Records of Williamson County, Texas (P.R.W.C.TX.), described in a deed to Randolph Brooks Federal Credit Union, recorded in Document No. 2016023826, O.P.R.W.C.TX., for the westerly northwest corner of Lot 3, Block "A", Wolf Ranch Subdivision, as recorded in Cabinet Y, Slides 112-115, P.R.W.C.TX., described in a deed to Target Corporation, recorded in Document No. 2003124159, O.P.R.W.C.TX., same being the southwest corner of said Lot 4-G, from which a mag nail with a shiner stamped "Bury & Partners" found bears, North 87°38'55" East, a distance of 107.23 feet to a calculated point, for the beginning of a tangent curve to the left, and with said tangent curve to the left, an arc distance of 65.67 feet, through a central angle of 07°31'30", having a radius of 500.00 feet and a chord that bears North 83°52'49" East, a distance of 65.62 feet;

THENCE, North 02°13'01" West, departing the north line of said Lot 3, with the east line of said Lot 7 and the west line of said Lot 4-G, a distance of **258.51 feet** to a 5/8-inch iron rod with a 2-inch aluminum cap stamped "Texas Department of Transportation (TXDOT)" set (Surface Coordinates: N=10,204,790.32, E=3,125,176.97) 75.00 feet right of S.H. 29 E.C.S. 162+49.59 on the proposed south right-of-way line of S.H. 29, for the southwest corner and **POINT OF BEGINNING** of the parcel described herein;

1) **THENCE, North 02°13'01" West**, departing the proposed south right-of-way line of said S.H. 29, continuing with the common line of said Lot 7 and said Lot 4-G, a distance of **6.00 feet** to a calculated point on the existing south right-of-way line of S.H. 29, a variable width right-of-way, as dedicated in said plat recorded in Cabinet Y, Slides 112-115, P.R.W.C.TX., and as depicted in TXDOT R.O.W. Strip Map CSJ No. 0337-01-023, for the northeast corner of said Lot 7, same being the northwest corner of said Lot 4-G and of the parcel described herein;

2) **THENCE, North 87°39'07" East**, departing the common line of said Lot 7 and said Lot 4-G, with the existing south right-of-way line of said S.H. 29, a distance of **187.03 feet** to a calculated point, for the northwest corner of Lot 4-F, Block "A", Final Plat of Lot 4-F & 4-G, Block A, Wolf Ranch Subdivision, a Resubdivision of Block "A", Lot 4-E of the Resubdivision of Block "A", Lot 4D, as recorded in Document No. 2015084207, O.P.R.W.C.TX. described in a deed to Georgetown Covenant Group LLC and EP Georgetown LLC, recorded in Document No. 2017013538, O.P.R.W.C.TX., same being the northeast corner of said Lot 4-G and of the parcel described herein;

3) **THENCE, South 02°13'01" East**, departing the existing south right-of-way line of said S.H. 29, with the east line of said Lot 4-G and the west line of said Lot 4-F, a distance of **6.00 feet** to a 5/8-inch iron rod with a 2-inch aluminum cap stamped TXDOT set 75.00 feet right of S.H. 29 E.C.S. 164+36.62 on the proposed south right-of-way line of said S.H. 29, for the southeast corner of the parcel described herein;

EXHIBIT "A"

County: Williamson
Highway: S.H. 29
Limits: From 0.161 Miles West of Wolf Ranch Parkway To I.H. 35
CCSJ: 0337-01-053
Parcel No.: 2

4) **THENCE**, **South 87°39'07" West**, departing the common line of said Lot 4-G and said Lot 4-F, with the proposed south right-of-way line of said S.H. 29, over and across said Lot 4-G, a distance of **187.03 feet** to the **POINT OF BEGINNING**, and containing 0.0258 acres (1,122 sq. ft.) of land.

Bearing Basis:
All bearings shown are based on NAD83/2011 Texas Coordinate System, Central Zone (4203). All distances shown are surface and may be converted to grid by dividing by a Surface Adjustment Factor of 1.00011. All coordinates shown are in surface and may be converted by dividing by the same factor. Project units are in U.S. Survey Feet.

THE STATE OF TEXAS §
§ KNOW ALL MEN BY THESE PRESENTS:
COUNTY OF TRAVIS §

That I, Scott C. Brashear, a Registered Professional Land Surveyor, do hereby certify that the above description is true and correct to the best of my knowledge and belief and that the property described herein was determined by a survey made on the ground under my direction and supervision.

WITNESS MY HAND AND SEAL at Austin, Travis County, Texas, on the date shown below.

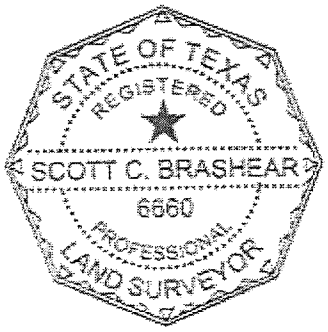

SURVEYING AND MAPPING, LLC
4801 Southwest Pkwy
Building Two, Suite 100
Austin, Texas 78735
TX. Firm No. 10064300

Scott C. Brashear 4/5/2024
Scott C. Brashear Date
Registered Professional Land Surveyor
No. 6660 – State of Texas

EXHIBIT "B"

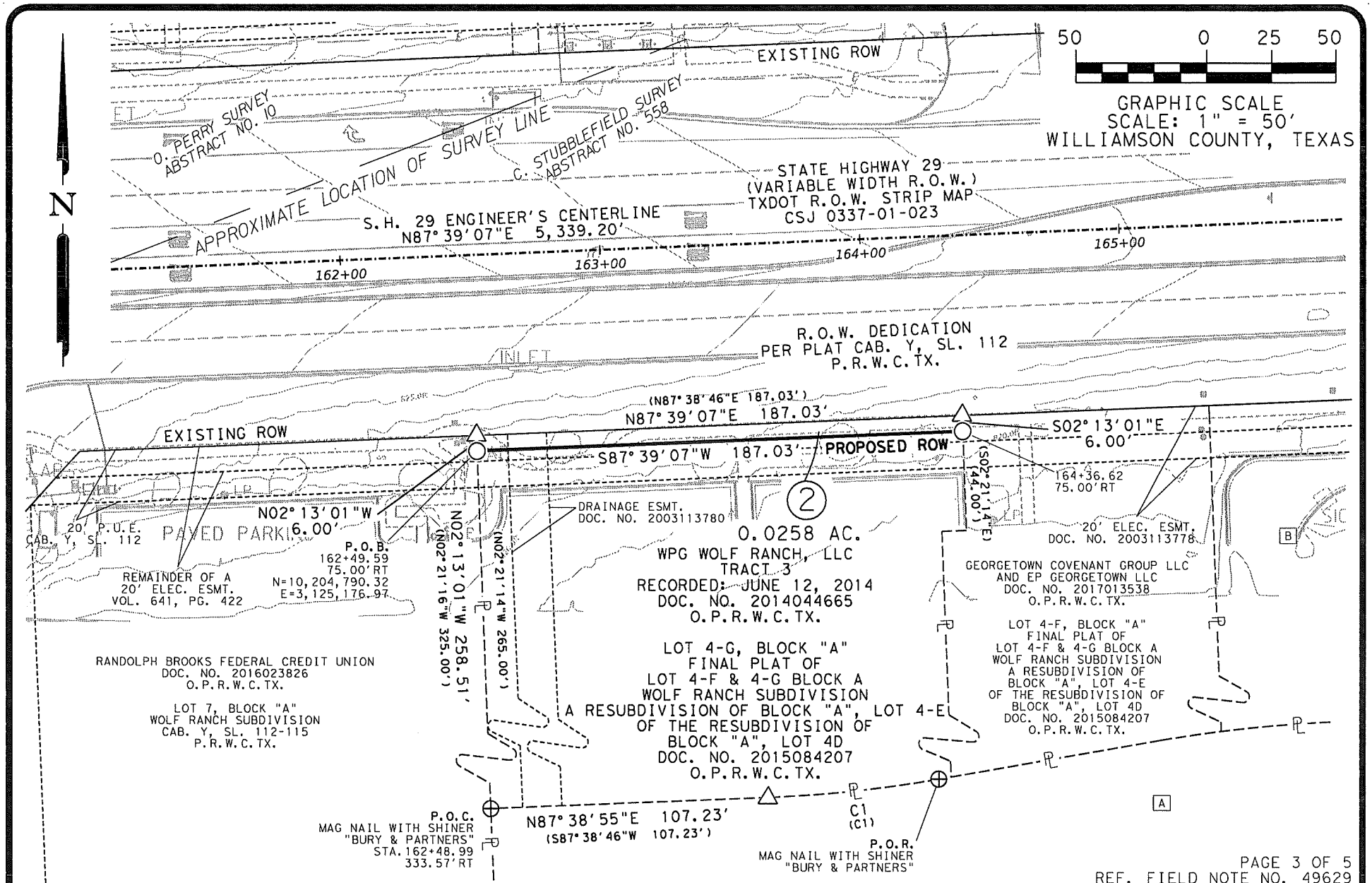

PAGE 3 OF 5
REF. FIELD NOTE NO. 49629

FILE:\\saminc\AUS\PROJECTS\1019052245F\100\Survey\03Exhibits\Parcel 2\SH 29_Parcel 2.dgn

EXISTING	*1.085 AC.	ACQUIRE	0.0258 AC.	REMAINING	1.0592 AC. RIGHT

© 2024

Texas Department of Transportation

SAM™
4801 Southwest Parkway
Building Two, Suite 100
Austin, Texas 78735
(512) 447-0575
Fax.: (512) 326-3029
Texas Firm Registration No. 10064300

RIGHT-OF-WAY SKETCH
SHOWING PROPERTY OF
WPG WOLF RANCH, LLC
PARCEL 2
0.0258 AC. (1,122 SQ. FT.)
CSJ NO. 0337-01-053

SCHEDULE B:

THIS SURVEY HEREON WAS PREPARED IN CONJUNCTION WITH THAT COMMITMENT FOR TITLE INSURANCE GF NO. 24-779309-GT, ISSUED BY FIRST NATIONAL TITLE INSURANCE COMPANY, EFFECTIVE DATE JANUARY 21, 2024, AND ISSUED DATE JANUARY 29, 2024.

10. THE FOLLOWING MATTERS AND ALL TERMS OF THE DOCUMENTS CREATING OR OFFERING EVIDENCE OF THE MATTERS (WE MUST INSERT MATTERS OR DELETE THIS EXCEPTION.):

A. ALL LEASES, GRANTS, EXCEPTIONS OR RESERVATIONS OF COAL, LIGNITE, OIL, GAS AND OTHER MINERALS, TOGETHER WITH ALL RIGHTS, PRIVILEGES AND IMMUNITIES RELATING THERETO, APPEARING IN THE PUBLIC RECORDS WHETHER LISTED IN SCHEDULE B OR NOT. THERE MAY BE LEASES, GRANTS, EXCEPTIONS OR RESERVATIONS OF MINERAL INTEREST THAT ARE NOT LISTED.

B. ALL LEASES, GRANTS, EXCEPTIONS OR RESERVATIONS OF THE GEOTHERMAL ENERGY AND ASSOCIATED RESOURCES BELOW THE SURFACE OF THE LAND, TOGETHER WITH ALL RIGHTS, PRIVILEGES, AND IMMUNITIES RELATING THERETO, APPEARING IN THE PUBLIC RECORDS WHETHER LISTED IN SCHEDULE B OR NOT. THERE MAY BE LEASES, GRANTS, EXCEPTIONS OR RESERVATIONS OF THE GEOTHERMAL ENERGY AND ASSOCIATED RESOURCES BELOW THE SURFACE OF THE LAND THAT ARE NOT LISTED.

C. ALL VISIBLE AND APPARENT EASEMENTS OR USES AND ALL UNDERGROUND EASEMENTS OR USES, THE EXISTENCE OF WHICH MAY ARISE BY UNRECORDED GRANT OR BY USE.

D. RIGHTS OF PARTIES IN POSSESSION.

E. RIGHTS OF TENANTS, AS TENANTS ONLY, UNDER UNRECORDED LEASES OR RENTAL AGREEMENTS.

F. 20 FOOT WIDE GATEWAY AND LANDSCAPE EASEMENT AND PUBLIC UTILITY EASEMENT ALONG THE NORTH PROPERTY LINE OF LOT 4-G, BLOCK A, AS REFLECTED IN DOCUMENT NO. 2015084207 AND IN CABINET Y, SLIDE 112 OF THE PLAT RECORDS OF WILLIAMSON COUNTY, TEXAS. (AFFECT PARCEL AS SHOWN)

G. RIGHT OF WAY AND EASEMENT BY AND BETWEEN JAY L. WOLF AND WIFE, BETTY WOLF, TO THE CITY OF GEORGETOWN, DATED APRIL 28, 1976, AND RECORDED JULY 22, 1976, IN/UNDER VOLUME 641, PAGE 422, OF THE OFFICIAL PUBLIC RECORDS OF WILLIAMSON COUNTY, TEXAS. (DOES NOT AFFECT)

H. ELECTRIC EASEMENT GRANTED TO THE CITY OF GEORGETOWN, TEXAS, AS SET FORTH AND DESCRIBED UNDER CLERK'S FILE NO. 2003113778, OFFICIAL PUBLIC RECORDS, WILLIAMSON COUNTY, TEXAS. (AFFECTS PARCEL AS SHOWN)

I. DRAINAGE EASEMENT GRANTED TO THE CITY OF GEORGETOWN, TEXAS, AS SET FORTH AND DESCRIBED UNDER CLERK'S FILE NO. 2003113780, OFFICIAL PUBLIC RECORDS, WILLIAMSON COUNTY, TEXAS. (AFFECTS PARCEL AS SHOWN)

J. TERMS, CONDITIONS AND STIPULATIONS OF THAT CERTAIN OPERATION AND EASEMENT AGREEMENT, BY AND BETWEEN TARGET CORPORATION AND SPG WOLF RANCH, LP, AS SET FORTH AND DESCRIBED UNDER CLERK'S FILE NO. 2003124160, OFFICIAL PUBLIC RECORDS, WILLIAMSON COUNTY, TEXAS. (DOES NOT AFFECT)

K. TERMS, CONDITIONS AND STIPULATIONS OF THAT CERTAIN MEMORANDUM OF DEVELOPER ACQUISITION RIGHTS AGREEMENT, BY AND BETWEEN TARGET CORPORATION AND SPG WOLF RANCH, LP, AS SET FORTH AND DESCRIBED UNDER CLERK'S FILE NO. 2003124161, OFFICIAL PUBLIC RECORDS, WILLIAMSON COUNTY, TEXAS. (MAY AFFECT. NOT ABLE TO PLOT)

L. TERMS, CONDITIONS AND STIPULATIONS OF THAT CERTAIN SIGN EASEMENT AGREEMENT, BY AND BETWEEN KOHL'S TEXAS, LP AND SPG WOLF RANCH, LP, AS SET FORTH AND DESCRIBED UNDER CLERK'S FILE NO.2004073659, OFFICIAL PUBLIC RECORDS, WILLIAMSON COUNTY, TEXAS. (DOES NOT AFFECT)

M. TERMS, CONDITIONS AND STIPULATIONS OF THAT CERTAIN MEMORANDUM OF SUPPLEMENTAL AGREEMENT, BY AND BETWEEN KOHL'S TEXAS, LP AND SPG WOLF RANCH, LP, AS SET FORTH AND DESCRIBED UNDER CLERK'S FILE NO. 2004073657, OFFICIAL PUBLIC RECORDS, WILLIAMSON COUNTY, TEXAS. (DOES NOT AFFECT)

N. TERMS, CONDITIONS AND STIPULATIONS OF THAT CERTAIN FIRST AMENDMENT TO DEVELOPMENT AGREEMENT, BY AND BETWEEN THE CITY OF GEORGETOWN AND SPG WOLF RANCH, LP, AS SET FORTH AND DESCRIBED UNDER CLERK'S FILE NO. 2006051008, OFFICIAL PUBLIC RECORDS, WILLIAMSON COUNTY, TEXAS. (MAY AFFECT)

O. TERMS, CONDITIONS AND STIPULATIONS OF THAT CERTAIN ACCESS EASEMENT AGREEMENT, DATED DECEMBER 30, 2015, BY AND BETWEEN WPG WOLF RANCH, LLC AND RANDOLPH-BROOKS FEDERAL CREDIT UNION, DATED DECEMBER 30, 2015, FILED UNDER CLERK'S FILE NO. 2016000725, OFFICIAL PUBLIC RECORDS OF WILLIAMSON COUNTY, TEXAS. (MAY AFFECT)

P. TERMS, CONDITIONS AND STIPULATIONS OF THAT CERTAIN DECLARATION OF WASTEWATER EASEMENT, EXECUTED BY 2016078607, OFFICIAL PUBLIC RECORDS OF WILLIAMSON COUNTY, TEXAS. (DOES NOT AFFECT)

Q. ORDINANCE NO. 2004-46, DATED JULY 27,2004, RECORDED IN DOCUMENT NO. 2005068647, OFFICIAL PUBLIC RECORDS OF WILLIAMSON COUNTY, TEXAS. (DOES NOT AFFECT)

R. TERMS AND PROVISIONS OF MEMORANDUM OF SHOPPING CENTER LEASE AGREEMENT FROM SPG WOLF RANCH, LLC, LESSOR TO MICHAELS STORES, INC., LESSEE, DATED AUGUST 11, 2004, FILED MAY 5, 2005, RECORDED IN 2004090198, OFFICIAL PUBLIC RECORDS, WILLIAMSON COUNTY, TEXAS. (MAY AFFECT)

S. TERMS AND PROVISIONS OF MEMORANDUM OF LEASE AGREEMENT FROM SPG WOLF RANCH, LLC, LESSOR TO PETSMART, INC., LESSEE, DATED FEBRUARY 23, 2005, FILED DECEMBER 27, 2005, RECORDED IN 2005101775, OFFICIAL PUBLIC RECORDS, WILLIAMSON COUNTY, TEXAS. (MAY AFFECT. NOT ABLE TO PLOT)

T. TERMS AND PROVISIONS OF MEMORANDUM OF LEASE AGREEMENT FROM SPG WOLF RANCH, LLC, LESSOR TO BEST BUY STORES, LP, LESSEE, DATED JANUARY 24, 2006, FILED FEBRUARY 2, 2006, RECORDED IN 2006008194, OFFICIAL PUBLIC RECORDS, WILLIAMSON COUNTY, TEXAS. (MAY AFFECT. NOT ABLE TO PLOT)

U. TERMS AND PROVISIONS OF LEASE AGREEMENT FROM SPG WOLF RANCH, LLC, LESSOR TO PIER 1 IMPORTS (U.S.), INC., LESSEE, DATED FEBRUARY 9, 2005, FILED MAY 5, 2005, RECORDED IN 2005033509, OFFICIAL PUBLIC RECORDS, WILLIAMSON COUNTY, TEXAS. (DOES NOT AFFECT)

V. TERMS AND PROVISIONS OF LEASE AGREEMENT FROM WPG WOLF RANCH, LLC, LESSOR TO ULTA SALON COSMETICS & FRAGRANCE, INC., LESSEE, DATED JULY 20, 2018, FILED AUGUST 7, 2018, RECORDED IN 2018070271, OFFICIAL PUBLIC RECORDS, WILLIAMSON COUNTY, TEXAS. (DOES NOT APPLY)

FILE:\\saminc\AUS\PROJECTS\1019052245F\100\Survey\03Exhibits\Parcel 2\SH 29_Parcel 2.dgn

EXISTING	*1.085 AC.	ACQUIRE	0.0258 AC.	REMAINING	1.0592 AC. RIGHT

© 2024

Texas Department of Transportation

SAM™
4801 Southwest Parkway
Building Two, Suite 100
Austin, Texas 78735
(512) 447-0575
Fax: (512) 326-3029
Texas Firm Registration No. 10064300

RIGHT-OF-WAY SKETCH
SHOWING PROPERTY OF
WPG WOLF RANCH, LLC
PARCEL 2
0.0258 AC. (1,122 SQ. FT.)
CSJ NO. 0337-01-053

LEGEND

■	TYPE I CONCRETE MONUMENT FOUND
◎	TYPE II BRONZE DISK IN CONCRETE FOUND
⊡	TYPE II BRONZE DISK IN CONCRETE SET
○	5/8" IRON ROD SET WITH TXDOT ALUMINUM CAP
●	5/8" IRON ROD FOUND (AS NOTED)
⊕	NAIL FOUND (AS NOTED)
⬡	FENCE POST (TYPE NOTED)
△	CALCULATED POINT
℄	PROPERTY LINE
( )	RECORD INFORMATION
P.O.B.	POINT OF BEGINNING
P.O.C.	POINT OF COMMENCING
P.O.R.	POINT OF REFERENCE
N.T.S.	NOT TO SCALE
P.R.W.C.TX.	PLAT RECORDS OF WILLIAMSON COUNTY, TEXAS
O.P.R.W.C.TX.	OFFICIAL PUBLIC RECORDS OF WILLIAMSON COUNTY, TEXAS
---∿---	DISTANCE NOT TO SCALE
---/---	DEED LINE (COMMON OWNERSHIP)
----------	PROPERTY LINE
———	EXISTING RIGHT-OF-WAY
▬▬▬	PARCEL LIMITS
- - - - -	PROPOSED DRAINAGE EASEMENT
----------	EXISTING EASEMENT LINE

NOTES:

1. ALL PROJECT COORDINATES AND BEARINGS ARE GRID NORTH BASED ON THE TEXAS COORDINATE SYSTEM, CENTRAL ZONE (4203), NAD 83 (2011), EPOCH 2010.0. ALL SURFACE COORDINATES SHOWN HEREON MAY BE CONVERTED TO GRID BY DIVIDING BY A SURFACE ADJUSTMENT FACTOR OF 1.00011. UNITS: U.S. SURVEY FEET. SURVEY DATE: AUGUST, 2023

2. THIS SURVEY WAS COMPLETED WITHOUT THE BENEFIT OF TITLE REPORT, THERE MAY BE EASEMENTS OR OTHER MATTERS, RECORDED OR UNRECORDED, THAT ARE NOT SHOWN.

3. A PROPERTY DESCRIPTION OF EVEN DATE WAS PREPARED IN CONJUNCTION WITH THIS PARCEL PLAT.

* AREA CALCULATED BY SAM, LLC.

** UNABLE TO BE SET AT THE TIME OF SURVEY.

I HEREBY CERTIFY THAT THIS SURVEY WAS MADE ON THE GROUND UNDER MY DIRECTION AND SUPERVISION AND THAT THIS PLAT IS TRUE AND CORRECT TO THE BEST OF MY KNOWLEDGE AND BELIEF.

Scott C. Brashear

SCOTT C. BRASHEAR
REGISTERED PROFESSIONAL LAND SURVEYOR
NO. 6660, STATE OF TEXAS

4/5/2024
DATE

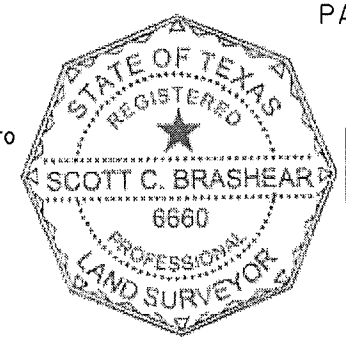

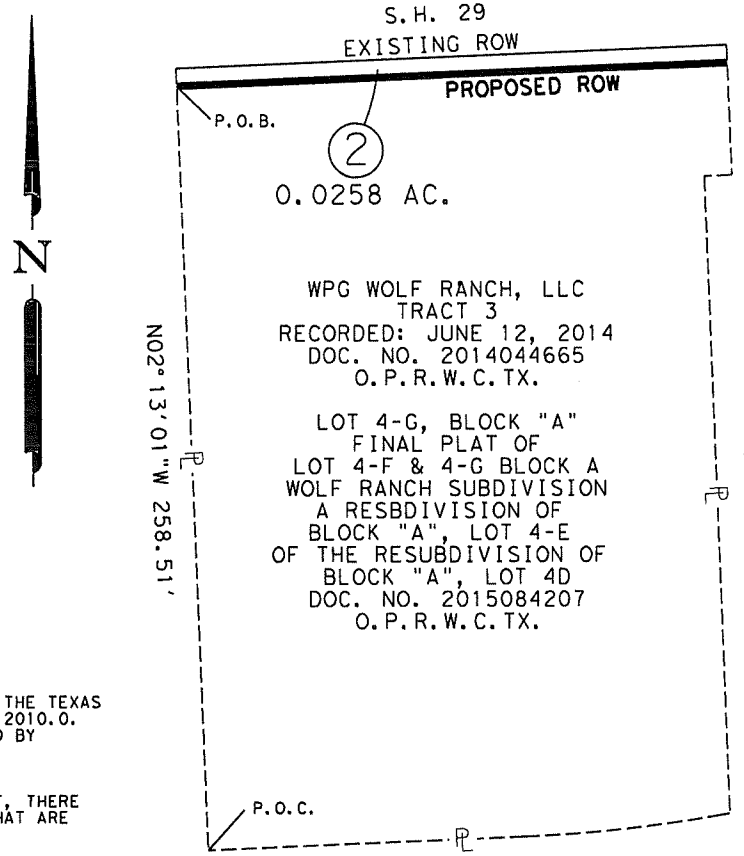

PARENT TRACT INSET
N.T.S.

A
TARGET CORPORATION
DOC. NO. 2003124159
O.P.R.W.C.TX.

LOT 3, BLOCK "A"
WOLF RANCH SUBDIVISION
CAB. Y, SL 112-115
P.R.W.C.TX.

B
STEPHEN PAUL ELSTON AND
CAROL RENEE ELSTON,
AS TRUSTEES OF THE ELSTON FAMILY TRUST
DOC. NO. 20100600072
O.P.R.W.C.TX.

LOT 4-D, BLOCK "A"
FINAL PLAT OF WOLF RANCH SUBDIVISION
A RESUBDIVISION OF BLOCK "A",
LOT 4D OF THE RESUBDIVISION
OF BLOCK "A", LOT 4-C
CAB. GG, SL. 51-52
P.R.W.C.TX.

CURVE TABLE

NO.	DELTA	RADIUS	LENGTH	CHORD	CHORD BEARING
C1	07°31'30"	500.00'	65.67'	65.62'	N83°52'49"E
(C1)	(07°31'31")	(500.00')	(65.67')	(65.62')	(S83°53'00"W)

REF. FIELD NOTE NO. 49629

FILE:\\saminc\AUS\PROJECTS\1019052245F\100\Survey\03Exhibits\Parcel 2\SH 29_Parcel 2.dgn

EXISTING	*1.085 AC.	ACQUIRE	0.0258 AC.	REMAINING	1.0592 AC. RIGHT

© 2024

Texas Department of Transportation

SAM™
4801 Southwest Parkway
Building Two, Suite 100
Austin, Texas 78735
(512) 447-0575
Fax: (512) 326-3029
Texas Firm Registration No. 10064300

RIGHT-OF-WAY SKETCH
SHOWING PROPERTY OF
WPG WOLF RANCH, LLC
PARCEL 2
0.0258 AC. (1,122 SQ. FT.)
CSJ NO. 0337-01-053

ELECTRONICALLY RECORDED
OFFICIAL PUBLIC RECORDS

2025078549

Pages: 8 Fee: $49.00
10/03/2025 03:41 PM
PKINNE



Nancy E. Rister, County Clerk
Williamson County,Texas

ELECTRONICALLY RECORDED 2025099453
Williamson County, Texas Total Pages: 12

After Recording Return To:

City of Georgetown
P.O. Box 409
Georgetown, Texas 78627
Attention: City Manager

AUSTIN TITLE COMPANY

GF# 1701324 00745

NOTICE OF CONFIDENTIALITY RIGHTS: IF YOU ARE A NATURAL PERSON, YOU MAY REMOVE OR STRIKE ANY OR ALL OF THE FOLLOWING INFORMATION FROM ANY INSTRUMENT THAT TRANSFERS AN INTEREST IN REAL PROPERTY BEFORE IT IS FILED FOR RECORD IN THE PUBLIC RECORDS: YOUR SOCIAL SECURITY NUMBER OR YOUR DRIVER'S LICENSE NUMBER.

SPECIAL WARRANTY DEED

STATE OF TEXAS §
§ KNOW ALL PERSONS BY THESE PRESENTS:
COUNTY OF WILLIAMSON §

That GEORGETOWN COVENANT GROUP LLC, a Nevada limited liability company, and EP GEORGETOWN LLC, a Nevada limited liability company (collectively, "**Grantor**"), for and in consideration of the sum of TEN AND NO/100 DOLLARS ($10.00) and other good and valuable consideration to the undersigned paid by the Grantee herein named, the receipt and sufficiency of which is hereby acknowledged, has GRANTED, SOLD and CONVEYED, and by these presents does hereby GRANT, SELL and CONVEY unto CITY OF GEORGETOWN, a Texas home-rule municipal corporation situated in Williamson County ("**Grantee**"), whose mailing address is P.O. Box 409, Georgetown, Texas 78627, Attention: City Manager, all of that certain lot, tract or parcel of land, together with all improvements thereon, lying and being situated in Williamson County, Texas, and being more particularly described in **Exhibit "A"** attached hereto (the "**Property**").

Grantor further conveys to Grantee, without warranty, all of Grantor's right, title and interest in and to the rights, tenements, hereditaments, easements, appendages, privileges and appurtenances pertaining thereto.

This conveyance of the Property is made by Grantor and accepted by Grantee subject to: (1) all streets and public rights of way; (2) all laws, rules and/or regulations (federal, state and/or local) now in effect; (3) restrictions, encumbrances, reservations, limitations, conditions, easements, agreements and/or other matters affecting the Property, if of public record; and (4) all standby fees, taxes and assessments for the current year (if such standby fees, taxes and assessments are not yet due and payable), which Grantee assumes and agrees to pay.

GRANTOR HAS NOT MADE AND DOES NOT MAKE ANY REPRESENTATIONS, WARRANTIES OR COVENANTS OF ANY KIND OR CHARACTER (EXCEPT AS TO WARRANTY OF TITLE), WHETHER EXPRESS OR IMPLIED, WITH RESPECT TO THE QUALITY OR CONDITION OF THE PROPERTY HEREIN CONVEYED, THE SUITABILITY OF THE PROPERTY FOR ANY AND ALL ACTIVITIES AND USES WHICH GRANTEE MAY CONDUCT THEREON, COMPLIANCE BY THE PROPERTY WITH ANY LAWS, RULES, ORDINANCES OR REGULATIONS OF ANY APPLICABLE GOVERNMENTAL AUTHORITY OR AS TO THE HABITABILITY, MERCHANTABILITY OR FITNESS FOR A PARTICULAR

PURPOSE. GRANTEE HAS MADE A PHYSICAL INSPECTION OF THE PROPERTY, AND GRANTEE IS SATISFIED AS TO THE CONDITION OF THE PROPERTY FOR GRANTEE'S INTENDED USE THEREOF. GRANTOR MAKES NO WARRANTY, EXPRESS OR IMPLIED, AS TO THE COMPLIANCE WITH REGULATIONS OR LAWS PERTAINING TO THE HEALTH OR ENVIRONMENT, AND THE SALE AND CONVEYANCE OF THE PROPERTY IS ON AN "AS IS, WHERE IS" BASIS AND GRANTEE EXPRESSLY ACKNOWLEDGES THAT THE SALES PRICE REFLECTS SUCH CONDITION.

TO HAVE AND TO HOLD, the Property, subject to the matter recited above, together with all the hereditaments and appurtenances thereunto belonging or in anywise appertaining, to the said Grantee, its successors and assigns, forever, and Grantor does hereby warrant and defend title to the Property against all persons or entities lawfully claiming the same by, through or under Grantor, but against no others.

When the context requires, singular nouns and pronouns include the plural.

[remainder of page left intentionally blank – signature and acknowledgment pages follow]

This instrument is executed on the date set forth on the acknowledgement set forth below but is effective for all purposes as of the 12 day of December 2025.

GRANTOR, collectively:

GEORGETOWN COVENANT GROUP LLC,
a Nevada limited liability company

By: _____
Name: Christopher Aguon
Its: Authorized Signatory

EP GEORGETOWN LLC,
a Nevada limited liability company

By: _____
Name: Kimberly Taylor
Its: Authorized Signatory

ACKNOWLEDGEMENT

State of Nevada
County of Clark

This instrument was acknowledged before me on December 3, 2025, by Christopher Aguon, as Authorized Signatory of Georgetown Covenant Group LLC, a Nevada limited liability company, on behalf of said limited liability company.

(Seal, if any)

(Signature of notarial officer)
Title (and Rank) Notary Public

TIERRA SMITH
Notary Public, State of Nevada
Appointment No. 23-2386-01
My Appt. Expires Apr 20, 2027

ACKNOWLEDGMENT

A notary public or other officer completing this certificate verifies only the identity of the individual who signed the document, to which this certificate is attached, and not the truthfulness, accuracy, or validity of that document.

State of California)
County of _____)

On _____, 2025, before me, _____, Notary Public, personally appeared Bruce Kahl, who proved to me on the basis of satisfactory evidence to be the person whose name is subscribed to the within instrument and acknowledged to me that he executed the same in his authorized capacity, and that by his signature on the instrument the person, or the entity upon behalf of which the person acted, executed the instrument.

I certify under PENALTY OF PERJURY under the laws of the State of California that the foregoing paragraph is true and correct.

WITNESS my hand and official seal.

Signature Attached (Seal)

ALL-PURPOSE ACKNOWLEDGEMENT – ATTACHED TO SPECIAL WARRANTY DEED

State of Nevada

County of Clark

This instrument was acknowledged before me, Tierra Smith, Notary Public, on December 3, 2025, by Kimberly Taylor (name(s) of person(s)) as Its Authorized Signatory (type of authority, e.g., officer, trustee, etc.) of EP Georgetown, LLC (name of party on behalf of whom instrument was executed.)

WITNESS my hand and official seal

(Signature of Notary)

TIERRA SMITH
Notary Public, State of Nevada
Appointment No. 23-2386-01
My Appt. Expires Apr 20, 2027

(Affix seal in the above blank space)

GRANTEE:

City of Georgetown,
a Texas home-rule municipal corporation

By: _____
David Morgan, City Manager

STATE OF TEXAS §
§
COUNTY OF WILLIAMSON §

This instrument was acknowledged before me on this 8th day of December, 2025 by David Morgan, City Manager of the City of Georgetown, a Texas home-rule municipal corporation, on behalf of said corporation.

_____
Notary Public, State of Texas

Shannon Biddle
My Commission Expires
9/26/2026
Notary ID133982902

APPROVED AS TO FORM:

_____
Andrew Culpepper, Assistant City Attorney

AFTER RECORDING, PLEASE RETURN TO:

CITY OF GEORGETOWN
ATTN: REAL ESTATE SERVICES
P.O. BOX 409
GEORGETOWN, TX 78627

EXHIBIT "A"

County: Williamson
Highway: S.H. 29
Limits: From 0.161 Miles West of Wolf Ranch Parkway To I.H. 35
CCSJ: 0337-01-053
Parcel No.: 3

PROPERTY DESCRIPTION FOR PARCEL 3

DESCRIPTION OF A 0.0131 ACRE (570 SQ. FT.) PARCEL OF LAND LOCATED IN THE C. STUBBLEFIELD SURVEY, ABSTRACT NO. 558, WILLIAMSON COUNTY, TEXAS, BEING A PORTION OF LOT 4-F, BLOCK "A", FINAL PLAT OF LOT 4-F & 4-G, BLOCK A, WOLF RANCH SUBDIVISION, A RESUBDIVISION OF BLOCK "A", LOT 4-E OF THE RESUBDIVISION OF BLOCK "A", LOT 4D, AS RECORDED IN DOCUMENT NO. 2015084207, OFFICIAL PUBLIC RECORDS OF WILLIAMSON COUNTY, TEXAS (O.P.R.W.C.TX.), DESCRIBED IN A DEED TO GEORGETOWN COVENANT GROUP LLC AND EP GEORGETOWN LLC, RECORDED FEBRUARY 13, 2017 IN DOCUMENT NO. 2017013538, O.P.R.W.C.TX.; SAID 0.0131 ACRE (570 SQ. FT.) PARCEL, AS SHOWN ON A PLAT PREPARED BY SAM, LLC, BEING MORE PARTICULARLY DESCRIBED BY METES AND BOUNDS AS FOLLOWS:

COMMENCING at a mag nail with a shiner stamped "Bury & Partners" found 315.28 feet right of State Highway (S.H.) 29 Engineer's Centerline Station (E.C.S.) 165+31.07 on the north line of Lot 3, Block "A", Wolf Ranch Subdivision, as recorded in Cabinet Y, Slides 112-115, Plat Records of Williamson County, Texas (P.R.W.C.TX.), described in a deed to Target Corporation, recorded in Document No. 2003124159, O.P.R.W.C.TX., for the southeast corner of said Lot 4-F, same being the southwest corner of Lot 4-D, Block "A", Final Plat of Wolf Ranch Subdivision, a Resubdivision of Block "A", Lot 4D of the Resubdivision of Block "A", Lot 4-C, as recorded in Cabinet GG, Slides 51-52, P.R.W.C.TX., described in a deed to Stephen Paul Elston and Carol Renee Elston, as trustees of the Elston Family Trust, recorded in Document No. 2010060072, O.P.R.W.C.TX.;

THENCE, North 02°13'01" West, departing the north line of said Lot 3, with the west line of said Lot 4-D and the east line said Lot 4-F, a distance of **240.28 feet** to a 5/8-inch iron rod with a 2-inch aluminum cap stamped "Texas Department of Transportation (TXDOT)" set (Surface Coordinates: N 10,204,801.87, E 3,125,458.77) 75.00 feet right of S.H. 29 E.C.S. 165+31.62 on the proposed south right-of-way line of S.H. 29, for the southeast corner and **POINT OF BEGINNING** of the parcel described herein;

1) **THENCE**, **South 87°39'07" West**, departing the common line of said Lot 4-F and said Lot 4-D, with the proposed south right-of-way line of said S.H. 29, over and across said Lot 4-F, a distance of **75.00 feet** to a 5/8-inch iron rod with a 2-inch aluminum cap stamped TXDOT set 75.00 feet right of S.H. 29 E.C.S. 164+36.62 on the west line of said Lot 4-F and the east line of Lot 4-G, Block "A", Final Plat of Lot 4-F & 4-G, Block A, Wolf Ranch Subdivision, a Resubdivision of Block "A", Lot 4-E of the Resubdivision of Block "A", Lot 4D, as recorded in Document No. 2015084207, O.P.R.W.C.TX., described in a deed as Tract 3 to WPG Wolf Ranch, LLC, recorded in Document No. 2014044665, O.P.R.W.C.TX., for the southwest corner of the parcel described herein;

2) **THENCE**, **North 02°13'01" West**, departing the proposed south right-of-way line of said S.H. 29, with the common line of said Lot 4-F and said Lot 4-G, a distance of **6.00 feet** to a calculated point on the existing south right-of-way line of S.H. 29, a variable width right-of-way, as dedicated in said plat recorded in Cabinet Y, Slides 112-115, P.R.W.C.TX., and as depicted in TXDOT R.O.W. Strip Map No. CSJ 0337-01-023, for the northeast corner of said Lot 4-G, same being the northwest corner of said Lot 4-F and of the parcel described herein;

3) **THENCE**, **North 87°39'07" East**, departing the common line of said Lot 4-G and said Lot 4-F, with the existing south right-of-way line of said S.H. 29, a distance of **75.00 feet** to a calculated point, for the northwest corner of said Lot 4-D, same being the northeast corner of said Lot 4-F and of the parcel described herein;

EXHIBIT "A"

County: Williamson
Highway: S.H. 29
Limits: From 0.161 Miles West of Wolf Ranch Parkway To I.H. 35
CCSJ: 0337-01-053
Parcel No.: 3

4) **THENCE, South 02°13'01" East**, departing the existing south right-of-way line of said S.H. 29, with the common line of said Lot 4-F and said Lot 4-D, a distance of **6.00 feet** to the **POINT OF BEGINNING**, and containing 0.0131 acres (570 sq. ft.) of land.

Bearing Basis:
All bearings shown are based on NAD83/2011 Texas Coordinate System, Central Zone (4203). All distances shown are surface and may be converted to grid by dividing by a Surface Adjustment Factor of 1.00011. All coordinates shown are in surface and may be converted by dividing by the same factor. Project units are in U.S. Survey Feet.

THE STATE OF TEXAS
COUNTY OF TRAVIS

KNOW ALL MEN BY THESE PRESENTS:

That I, Scott C. Brashear, a Registered Professional Land Surveyor, do hereby certify that the above description is true and correct to the best of my knowledge and belief and that the property described herein was determined by a survey made on the ground under my direction and supervision.

WITNESS MY HAND AND SEAL at Austin, Travis County, Texas, on the date shown below.

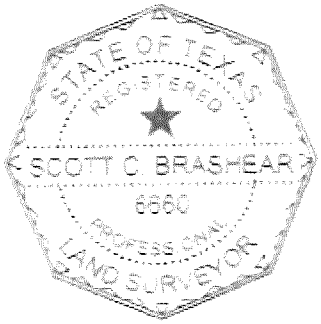

SURVEYING AND MAPPING, LLC
4801 Southwest Pkwy
Building Two, Suite 100
Austin, Texas 78735
TX. Firm No. 10064300

Scott C. Brashear 4/5/2024
Scott C. Brashear Date
Registered Professional Land Surveyor
No. 6660 – State of Texas

EXHIBIT "B"

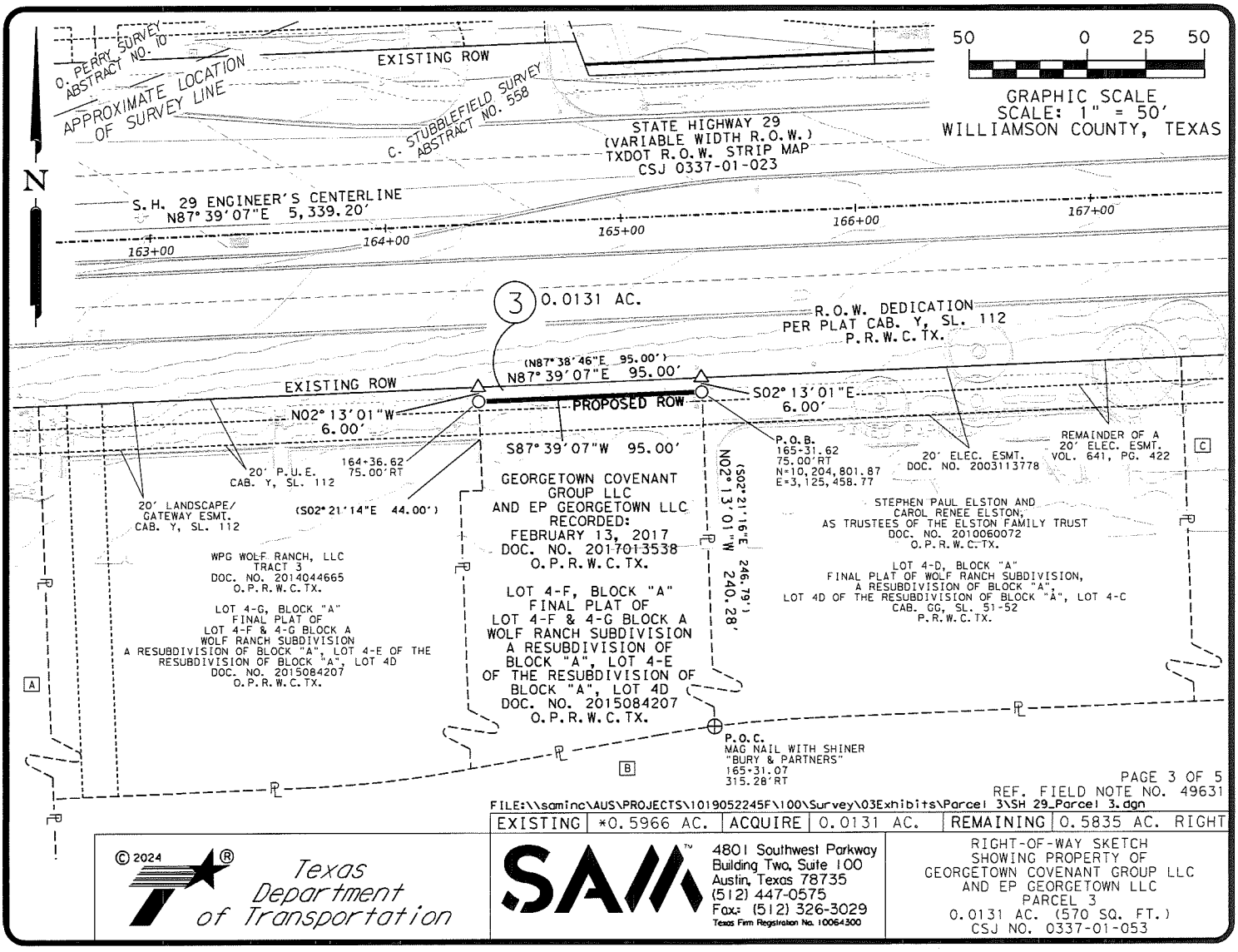

PAGE 3 OF 5
REF. FIELD NOTE NO. 49631

FILE:\\saminc\AUS\PROJECTS\1019052245F\100\Survey\03Exhibits\Parcel 3\SH 29_Parcel 3.dgn

EXISTING	*0.5966 AC.	ACQUIRE	0.0131 AC.	REMAINING	0.5835 AC. RIGHT

© 2024

Texas Department of Transportation

SAM™
4801 Southwest Parkway
Building Two, Suite 100
Austin, Texas 78735
(512) 447-0575
Fax: (512) 326-3029
Texas Firm Registration No. 10064300

RIGHT-OF-WAY SKETCH
SHOWING PROPERTY OF
GEORGETOWN COVENANT GROUP LLC
AND EP GEORGETOWN LLC
PARCEL 3
0.0131 AC. (570 SQ. FT.)
CSJ NO. 0337-01-053

SCHEDULE B:

THIS SURVEY HEREON WAS PREPARED IN CONJUNCTION WITH THAT COMMITMENT FOR TITLE INSURANCE GF NO. 24-779315-GT, ISSUED BY FIRST NATIONAL TITLE INSURANCE COMPANY, EFFECTIVE DATE JANUARY 21, 2024, AND ISSUED DATE JANUARY 29, 2024.

10. THE FOLLOWING MATTERS AND ALL TERMS OF THE DOCUMENTS CREATING OR OFFERING EVIDENCE OF THE MATTERS (WE MUST INSERT MATTERS OR DELETE THIS EXCEPTION.):

A. ALL LEASES, GRANTS, EXCEPTIONS OR RESERVATIONS OF COAL, LIGNITE, OIL, GAS AND OTHER MINERALS, TOGETHER WITH ALL RIGHTS, PRIVILEGES AND IMMUNITIES RELATING THERETO, APPEARING IN THE PUBLIC RECORDS WHETHER LISTED IN SCHEDULE B OR NOT. THERE MAY BE LEASES, GRANTS, EXCEPTIONS OR RESERVATIONS OF MINERAL INTEREST THAT ARE NOT LISTED.

B. ALL LEASES, GRANTS, EXCEPTIONS OR RESERVATIONS OF THE GEOTHERMAL ENERGY AND ASSOCIATED RESOURCES BELOW THE SURFACE OF THE LAND, TOGETHER WITH ALL RIGHTS, PRIVILEGES, AND IMMUNITIES RELATING THERETO, APPEARING IN THE PUBLIC RECORDS WHETHER LISTED IN SCHEDULE B OR NOT. THERE MAY BE LEASES, GRANTS, EXCEPTIONS OR RESERVATIONS OF THE GEOTHERMAL ENERGY AND ASSOCIATED RESOURCES BELOW THE SURFACE OF THE LAND THAT ARE NOT LISTED.

C. ALL VISIBLE AND APPARENT EASEMENTS OR USES AND ALL UNDERGROUND EASEMENTS OR USES, THE EXISTENCE OF WHICH MAY ARISE BY UNRECORDED GRANT OR BY USE.

D. RIGHTS OF PARTIES IN POSSESSION.

E. RIGHTS OF TENANTS, AS TENANTS ONLY, UNDER UNRECORDED LEASES OR RENTAL AGREEMENTS.

F. 20 FOOT WIDE GATEWAY AND LANDSCAPE EASEMENT AND PUBLIC UTILITY EASEMENT ALONG THE NORTH PROPERTY LINE OF LOT 4-F, BLOCK A, AS REFLECTED IN PLAT RECORDED IN DOCUMENT NO. 201508420?, AND IN CABINET Y, SLIDE 112 OF THE PLAT RECORDS OF WILLIAMSON COUNTY, TEXAS. (AFFECT PARCEL AS SHOWN)

G. RIGHT OF WAY AND EASEMENT BY AND BETWEEN JAY L. WOLF AND WIFE, BETTY WOLF, TO THE CITY OF GEORGETOWN, DATED APRIL 28, 1976, AND RECORDED JULY 22, 1976, IN/UNDER VOLUME 641, PAGE 422, OF THE OFFICIAL PUBLIC RECORDS OF WILLIAMSON COUNTY, TEXAS. (AFFECTS PARCEL AS SHOWN)

H. ELECTRIC EASEMENT GRANTED TO THE CITY OF GEORGETOWN, TEXAS, AS SET FORTH AND DESCRIBED UNDER CLERK'S FILE NO. 2003113778, OFFICIAL PUBLIC RECORDS, WILLIAMSON COUNTY, TEXAS. (AFFECTS PARCEL AS SHOWN)

I. TERMS, CONDITIONS AND STIPULATIONS OF THAT CERTAIN OPERATION AND EASEMENT AGREEMENT, BY AND BETWEEN TARGET CORPORATION AND SPG WOLF RANCH, LP, AS SET FORTH AND DESCRIBED UNDER CLERK'S FILE NO. 2003124160, OFFICIAL PUBLIC RECORDS, WILLIAMSON COUNTY, TEXAS. (DOES NOT AFFECT)

J. TERMS, CONDITIONS AND STIPULATIONS OF THAT CERTAIN MEMORANDUM OF DEVELOPER ACQUISITION RIGHTS AGREEMENT, BY AND BETWEEN TARGET CORPORATION AND SPG WOLF RANCH, LP, AS SET FORTH AND DESCRIBED UNDER CLERK'S FILE NO. 2003124161, OFFICIAL PUBLIC RECORDS, WILLIAMSON COUNTY, TEXAS. (DOES NOT APPLY)

K. TERMS, CONDITIONS AND STIPULATIONS OF THAT CERTAIN SIGN EASEMENT AGREEMENT, BY AND BETWEEN KOHL'S TEXAS, LP AND SPG WOLF RANCH, LP, AS SET FORTH AND DESCRIBED UNDER CLERK'S FILE NO. 2004073659, OFFICIAL PUBLIC RECORDS, WILLIAMSON COUNTY, TEXAS. (MAY AFFECT. NOT ABLE TO PLOT)

L. TERMS, CONDITIONS AND STIPULATIONS OF THAT CERTAIN MEMORANDUM OF SUPPLEMENTAL AGREEMENT, BY AND BETWEEN KOHL'S TEXAS, LP AND SPG WOLF RANCH, LP, AS SET FORTH AND DESCRIBED UNDER CLERK'S FILE NO. 2004073657, OFFICIAL PUBLIC RECORDS, WILLIAMSON COUNTY, TEXAS. (DOES NOT AFFECT)

M. TERMS, CONDITIONS AND STIPULATIONS OF THAT CERTAIN FIRST AMENDMENT TO DEVELOPMENT AGREEMENT, BY AND BETWEEN THE CITY OF GEORGETOWN AND SPG WOLF RANCH, LP, AS SET FORTH AND DESCRIBED UNDER CLERK'S FILE NO. 2006051008, OFFICIAL PUBLIC RECORDS, WILLIAMSON COUNTY, TEXAS. (DOES NOT APPLY)

N. TERMS, CONDITIONS AND STIPULATIONS OF THAT CERTAIN ACCESS EASEMENT AGREEMENT, DATED DECEMBER 30, 2015, BY AND BETWEEN WPG WOLF RANCH, LLC AND RANDOLPH-BROOKS FEDERAL CREDIT UNION, DATED DECEMBER 30, 2015, FILED UNDER CLERK'S FILE NO. 2016000725, OFFICIAL PUBLIC RECORDS OF WILLIAMSON COUNTY, TEXAS. (MAY AFFECT. NOT ABLE TO PLOT)

O. TERMS, CONDITIONS AND STIPULATIONS OF THAT CERTAIN DECLARATION OF WASTEWATER EASEMENT, EXECUTED BY 2016078607, OFFICIAL PUBLIC RECORDS OF WILLIAMSON COUNTY, TEXAS. (DOES NOT AFFECT)

P. ORDINANCE NO. 2004-46, DATED JULY 27,2004, RECORDED IN DOCUMENT NO. 2005068647, OFFICIAL PUBLIC RECORDS OF WILLIAMSON COUNTY, TEXAS. (DOES NOT AFFECT)

Q. TERMS AND PROVISIONS OF MEMORANDUM OF SHOPPING CENTER LEASE AGREEMENT FROM SPG WOLF RANCH, LLC, LESSOR TO MICHAELS STORES, INC., LESSEE, DATED AUGUST 11, 2004, FILED MAY 5, 2005, RECORDED IN 2004090198, OFFICIAL PUBLIC RECORDS, WILLIAMSON COUNTY, TEXAS. (MAY AFFECT. NOT ABLE TO PLOT)

R. TERMS AND PROVISIONS OF MEMORANDUM OF LEASE AGREEMENT FROM SPG WOLF RANCH, LLC, LESSOR TO PETSMART, INC., LESSEE, DATED FEBRUARY 23, 2005, FILED DECEMBER 27, 2005, RECORDED IN 2005101775, OFFICIAL PUBLIC RECORDS, WILLIAMSON COUNTY, TEXAS. (MAY AFFECT. NOT ABLE TO PLOT)

S. TERMS AND PROVISIONS OF MEMORANDUM OF LEASE AGREEMENT FROM SPG WOLF RANCH, LLC, LESSOR TO BEST BUY STORES, LP, LESSEE, DATED JANUARY 24, 2006, FILED FEBRUARY 2, 2006, RECORDED IN 2006008194, OFFICIAL PUBLIC RECORDS, WILLIAMSON COUNTY, TEXAS. (MAY AFFECT. NOT ABLE TO PLOT)

T. TERMS AND PROVISIONS OF LEASE AGREEMENT FROM SPG WOLF RANCH, LLC, LESSOR TO PIER 1 IMPORTS (U.S.), INC., LESSEE, DATED FEBRUARY 9, 2005, FILED MAY 5, 2005, RECORDED IN 2005033509, OFFICIAL PUBLIC RECORDS, WILLIAMSON COUNTY, TEXAS. (DOES NOT AFFECT)

U. TERMS AND PROVISIONS OF MEMORANDUM OF TENANCY-IN-COMMON AGREEMENT BY AND BETWEEN GEORGETOWN COVENANT GROUP,LLC, AND EP GEORGETOWN, LLC, DATED FEBRUARY 10, 2017, FILED FEBRUARY 13, 2017, RECORDED IN 2017013540, REAL PROPERTY RECORDS, WILLIAMSON COUNTY, TEXAS. (DOES NOT APPLY)

V. TERMS AND PROVISIONS OF THE LEASE AGREEMENT, BY AND BETWEEN EP GEORGETOWN, LLC, LANDLORD AND PDS TEXAS DENTAL SERVICES, LLC, TENANT, AS EVIDENCED BY THAT SUBORDINATION AGREEMENT, DATED SEPTEMBER 25, 2018, FILED UNDER CLERK'S FILE NO. 2018091668, OFFICIAL RECORDS OF WILLIAMSON COUNTY, TEXAS. (DOES NOT APPLY)

REF. FIELD NOTE NO. 49631

FILE:\\saminc\AUS\PROJECTS\1019052245F\100\Survey\03Exhibits\Parcel 3\SH 29_Parcel 3.dgn

EXISTING	*0.5966 AC.	ACQUIRE	0.0131 AC.	REMAINING	0.5835 AC. RIGHT

© 2024

Texas Department of Transportation

SAM™
4801 Southwest Parkway
Building Two, Suite 100
Austin, Texas 78735
(512) 447-0575
Fax: (512) 326-3029
Texas Firm Registration No. 10064300

RIGHT-OF-WAY SKETCH
SHOWING PROPERTY OF
GEORGETOWN COVENANT GROUP LLC
AND EP GEORGETOWN LLC
PARCEL 3
0.0131 AC. (570 SQ. FT.)
CSJ NO. 0337-01-053

LEGEND

■	TYPE I CONCRETE MONUMENT FOUND
◎	TYPE II BRONZE DISK IN CONCRETE FOUND
⊙	TYPE II BRONZE DISK IN CONCRETE SET
○	5/8" IRON ROD SET WITH TXDOT ALUMINUM CAP
●	5/8" IRON ROD FOUND (AS NOTED)
⊕	NAIL FOUND (AS NOTED)
⬡	FENCE POST (TYPE NOTED)
△	CALCULATED POINT
℄	PROPERTY LINE
( )	RECORD INFORMATION
P.O.B.	POINT OF BEGINNING
P.O.C.	POINT OF COMMENCING
P.O.R.	POINT OF REFERENCE
N.T.S.	NOT TO SCALE
P.R.W.C.TX.	PLAT RECORDS OF WILLIAMSON COUNTY, TEXAS
O.P.R.W.C.TX.	OFFICIAL PUBLIC RECORDS OF WILLIAMSON COUNTY, TEXAS
----V----	DISTANCE NOT TO SCALE
----Z----	DEED LINE (COMMON OWNERSHIP)
----------	PROPERTY LINE
———	EXISTING RIGHT-OF-WAY
———	PARCEL LIMITS
- - - - - -	PROPOSED DRAINAGE EASEMENT
----------	EXISTING EASEMENT LINE

NOTES:

1. ALL PROJECT COORDINATES AND BEARINGS ARE GRID NORTH BASED ON THE TEXAS COORDINATE SYSTEM, CENTRAL ZONE (4203), NAD 83 (2011), EPOCH 2010.0. ALL SURFACE COORDINATES SHOWN HEREON MAY BE CONVERTED TO GRID BY DIVIDING BY A SURFACE ADJUSTMENT FACTOR OF 1.00011. UNITS: U.S. SURVEY FEET. SURVEY DATE: AUGUST, 2023

2. THIS SURVEY WAS COMPLETED WITHOUT THE BENEFIT OF TITLE REPORT, THERE MAY BE EASEMENTS OR OTHER MATTERS, RECORDED OR UNRECORDED, THAT ARE NOT SHOWN.

3. A PROPERTY DESCRIPTION OF EVEN DATE WAS PREPARED IN CONJUNCTION WITH THIS PARCEL PLAT.

* AREA CALCULATED BY SAM, LLC.

** UNABLE TO BE SET AT THE TIME OF SURVEY.

I HEREBY CERTIFY THAT THIS SURVEY WAS MADE ON THE GROUND UNDER MY DIRECTION AND SUPERVISION AND THAT THIS PLAT IS TRUE AND CORRECT TO THE BEST OF MY KNOWLEDGE AND BELIEF.

SCOTT C. BRASHEAR
REGISTERED PROFESSIONAL LAND SURVEYOR
NO. 6660, STATE OF TEXAS

4/5/2024
DATE

STATE OF TEXAS
REGISTERED
SCOTT C. BRASHEAR
6660
PROFESSIONAL
LAND SURVEYOR

N

[A]
RANDOLPH BROOKS FEDERAL CREDIT UNION
DOC. NO. 2016023826
O.P.R.W.C.TX.

LOT 7, BLOCK "A"
WOLF RANCH SUBDIVISION
CAB. Y, SL. 112-115
P.R.W.C.TX.

[B]
TARGET CORPORATION
DOC. NO. 2003124159
O.P.R.W.C.TX.

LOT 3, BLOCK "A"
WOLF RANCH SUBDIVISION
CAB. Y, SL. 112-115
P.R.W.C.TX.

[C]
STEAK N SHAKE OPERATIONS, INC.
DOC. NO. 2006024177
O.P.R.W.C.TX.

LOT 4C
FINAL PLAT OF WOLF RANCH SUBDIVISION
A RESUBDIVISION OF BLOCK "A", LOT 4-C
CAB. BB, SL. 108-109
P.R.W.C.TX.

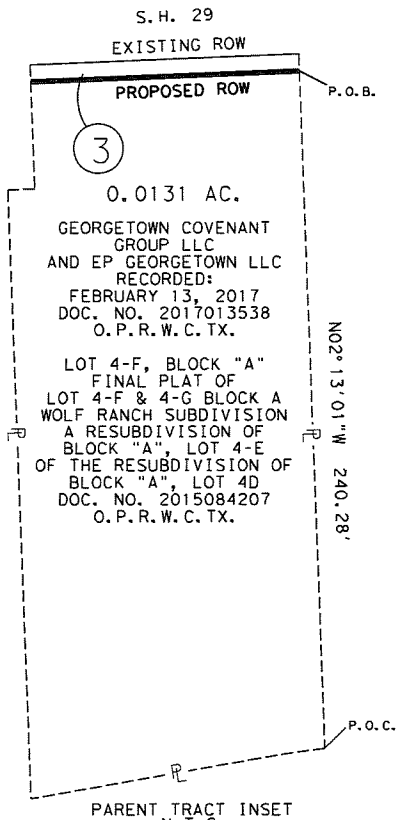

PAGE 5 OF 5
REF. FIELD NOTE NO. 49631

FILE:\\saminc\AUS\PROJECTS\1019052245F\100\Survey\03Exhibits\Parcel 3\SH 29_Parcel 3.dgn

EXISTING	*0.5966 AC.	ACQUIRE	0.0131 AC.	REMAINING	0.5835 AC. RIGHT

© 2024

Texas Department of Transportation

SAM™
4801 Southwest Parkway
Building Two, Suite 100
Austin, Texas 78735
(512) 447-0575
Fax: (512) 326-3029
Texas Firm Registration No. 10064300

RIGHT-OF-WAY SKETCH
SHOWING PROPERTY OF
GEORGETOWN COVENANT GROUP LLC
AND EP GEORGETOWN LLC
PARCEL 3
0.0131 AC. (570 SQ. FT.)
CSJ NO. 0337-01-053

ELECTRONICALLY RECORDED
OFFICIAL PUBLIC RECORDS

2025099453

Pages: 12 Fee: $65.00
12/16/2025 12:23 PM
MBARRICK

Nancy E. Rister, County Clerk
Williamson County,Texas

ELECTRONICALLY RECORDED 2025076213
Williamson County, Texas Total Pages: 11

AUSTIN TITLE COMPANY

GF# 170134240073 9

GENERAL WARRANTY DEED

NOTICE OF CONFIDENTIALITY RIGHTS: If you are a natural person, you may remove or strike any of the following information from this instrument before it is filed for record in the public records: Your social security number or your driver's license number.

DATE: 6/27/2025, 2025

GRANTORS: Stephen Paul Elston and Carol Renee Elston
as Trustees of the Elston Family Trust

GRANTOR'S MAILING ADDRESS: 1422 Santa Margarita Drive, Fall Brook, San Diego County, CA 92028

GRANTEE: City of Georgetown, a Texas home-rule municipal corporation

GRANTEE'S MAILING ADDRESS (including County): P.O. Box 409, Georgetown, Williamson County, Texas 78627

CONSIDERATION: Ten and No/100 Dollars ($10.00) and other good and valuable consideration.

PROPERTY (including any improvements):

> Being a 0.0281-acre tract of land, more or less, said tract being more fully described in **Exhibit "A"** and depicted in **Exhibit "B"**, each being attached hereto and by this reference incorporated herein (the "Property").

RESERVATIONS FROM AND EXCEPTIONS TO CONVEYANCE AND WARRANTY:

This conveyance is made, delivered and accepted subject to any and all easements, covenants, leases, rights-of-way, conditions, restrictions, outstanding mineral interests and royalty interests, if any, relating to the Property, to the extent, and only to the extent, that the same may still be in force and effect and shown in the Official Public Records of Williamson County, Texas.

Grantor, for the consideration and subject to the Reservations From and Exceptions to Conveyance and Warranty, GRANTS, SELLS, and CONVEYS to Grantee the Property, together with all and singular the rights and appurtenances thereto in any way belonging, to have and hold it to Grantee and Grantee's heirs, successors and assigns forever. Grantor binds Grantor and Grantor's heirs, successors and assigns to warrant and forever defend all and singular the Property to Grantee and Grantee's heirs, successors, and assigns against

Unofficial Document

every person whomsoever lawfully claiming or to claim the same or any part thereof, except as to the Reservations From and Exceptions to Conveyance and Warranty.

GRANTOR:

Stephen Paul Elston
Trustee of the Elston Family Trust

_____
Trustee

THE STATE OF _____ §
§
COUNTY OF _____ §

This instrument was acknowledged before me on this the ____ day of _____, 2025, by Stephen Paul Elston, an Individual, who on this day personally appeared or known to me (or proved to me on the oath of _____ or through _____ (description of identity card or other document) to be the person whose name is subscribed to the foregoing instrument and acknowledged to me that he/she executed the same for the purposes and consideration therein expressed.

_____
Notary Public
State of _____

See Attached California All-Purpose Acknowledgment / Jurat / Copy Certification

RECORDERS MEMORANDUM

All or parts of the text on this page was not clearly legible for satisfactory recordation

Unofficial Document

GRANTOR:

Carol Renee Elston
Trustee of the Elston Family Trust

Carol R. Elston
Trustee

THE STATE OF _____ §
§
COUNTY OF _____ §

This instrument was acknowledged before me on this the ___ day of _____, 2025, by Carol Renee Elston, an Individual, who on this day personally appeared or known to me (or proved to me on the oath of _____ or through _____ (description of identity card or other document) to be the person whose name is subscribed to the foregoing instrument and acknowledged to me that he/she executed the same for the purposes and consideration therein expressed.

See Attached California All-Purpose Acknowledgment / Jurat / Copy Certification

_____
Notary Public
State of _____

APPROVED AS TO FORM:

_____
Andrew Culpepper, Assistant City Attorney

RECORDERS MEMORANDUM

All or parts of the text on this page was not clearly legible for satisfactory recordation

AFTER RECORDING RETURN TO:
City of Georgetown
Attn: Real Estate Services
P.O. Box 409
Georgetown, Texas 78627

Unofficial Document

CALIFORNIA ACKNOWLEDGMENT CIVIL CODE § 1189

A notary public or other officer completing this certificate verifies only the identity of the individual who signed the document to which this certificate is attached, and not the truthfulness, accuracy, or validity of that document.

State of California
County of San Diego }

On Aug. 27- 2025 before me, Rakesh Shah, a Notary Public
Date *Here Insert Name and Title of the Officer*

personally appeared Stephen Paul Elston and Carol Renee Elston
Name(s) of Signer(s)

who proved to me on the basis of satisfactory evidence to be the person(s) whose name(s) ~~is~~/are subscribed to the within instrument and acknowledged to me that ~~he/she~~/they executed the same in ~~his/her~~/their authorized capacity(ies), and that by ~~his/her~~/their signature(s) on the instrument the person(s), or the entity upon behalf of which the person(s) acted, executed the instrument.

RAKESH SHAH
COMM. # 2411284
NOTARY PUBLIC • CALIFORNIA
SAN DIEGO COUNTY
Comm. Exp. AUG. 16, 2026

I certify under PENALTY OF PERJURY under the laws of the State of California that the foregoing paragraph is true and correct.

WITNESS my hand and official seal.

Signature _____
Signature of Notary Public

Place Notary Seal and/or Stamp Above

OPTIONAL

Completing this information can deter alteration of the document or fraudulent reattachment of this form to an unintended document.

Description of Attached Document

Title or Type of Document: General Warranty Deed

Document Date: _____ Number of Pages: _____

Signer(s) Other Than Named Above: _____

Capacity(ies) Claimed by Signer(s)

Signer's Name: _____	Signer's Name: _____
☐ Corporate Officer – Title(s): _____	☐ Corporate Officer – Title(s): _____
☐ Partner – ☐ Limited ☐ General	☐ Partner – ☐ Limited ☐ General
☐ Individual ☐ Attorney in Fact	☐ Individual ☐ Attorney in Fact
☐ Trustee ☐ Guardian or Conservator	☐ Trustee ☐ Guardian or Conservator
☐ Other: _____	☐ Other: _____
Signer is Representing: _____	Signer is Representing: _____

©2019 National Notary Association

Unofficial Document

EXHIBIT "A"

County: Williamson
Highway: S.H. 29
Limits: From 0.161 Miles West of Wolf Ranch Parkway To I.H. 35
CCSJ: 0337-01-053
Parcel No.: 4

PROPERTY DESCRIPTION FOR PARCEL 4

DESCRIPTION OF A 0.0281 ACRE (1,225 SQ. FT.) PARCEL OF LAND LOCATED IN THE C. STUBBLEFIELD SURVEY, ABSTRACT NO. 558, WILLIAMSON COUNTY, TEXAS, BEING A PORTION OF LOT 4-D, BLOCK "A", FINAL PLAT OF WOLF RANCH SUBDIVISION, A RESUBDIVISION OF BLOCK "A", LOT 4D OF THE RESUBDIVISION OF BLOCK "A", LOT 4-C, AS RECORDED IN CABINET GG, SLIDES 51-52, PLAT RECORDS OF WILLIAMSON COUNTY, TEXAS (P.R.W.C.TX.), DESCRIBED IN A DEED TO STEPHEN PAUL ELSTON AND CAROL RENEE ELSTON, AS TRUSTEES OF THE ELSTON FAMILY TRUST, RECORDED SEPTEMBER 7, 2010 IN DOCUMENT NO. 2010060072, OFFICIAL PUBLIC RECORDS OF WILLIAMSON COUNTY, TEXAS (O.P.R.W.C.TX.); SAID 0.0281 ACRE (1,225 SQ. FT.) PARCEL, AS SHOWN ON A PLAT PREPARED BY SAM, LLC, BEING MORE PARTICULARLY DESCRIBED BY METES AND BOUNDS AS FOLLOWS:

COMMENCING at a mag nail with a shiner stamped "Bury & Partners" found 315.28 feet right of State Highway (S.H.) 29 Engineer's Centerline Station (E.C.S.) 165+31.07 on the north line of Lot 3, Block "A", Wolf Ranch Subdivision, as recorded in Cabinet Y, Slides 112-115, P.R.W.C.TX., described in a deed to Target Corporation, recorded in Document No. 2003124159, O.P.R.W.C.TX., for the southeast corner of Lot 4-F, Block "A", Final Plat of Lot 4-F & 4-G, Block A Wolf Ranch Subdivision, a Resubdivision of Block "A", Lot 4-E of the Resubdivision of Block "A", Lot 4D, as recorded in Document No. 2015084207, O.P.R.W.C.TX., described in a deed to Georgetown Covenant Group LLC and EP Georgetown LLC, recorded in Document No. 2017013538, O.P.R.W.C.TX., same being the southwest corner of said Lot 4-D;

THENCE, North 02°13'01" West, departing the north line of said Lot 3, with the west line of said Lot 4-D and the east line of said Lot 4-F, a distance of **240.28 feet** to a 5/8-inch iron rod with a 2-inch aluminum cap stamped "Texas Department of Transportation (TXDOT)" set (Surface Coordinates: N= 10,204,801.87, E= 3,125,458.77) 75.00 feet right of S.H. 29 E.C.S. 165+31.62 on the proposed south right-of-way line of S.H. 29, for the southwest corner and **POINT OF BEGINNING** of the parcel described herein;

1) **THENCE**, **North 02°13'01" West**, departing the proposed south right-of-way line of said S.H. 29, continuing with the common line of said Lot 4-D and said Lot 4-F, a distance of **6.00 feet** to a calculated point on the existing south right-of-way line of S.H. 29, a variable width right-of-way, as dedicated in said plat recorded in Cabinet Y, Slides 112-115, P.R.W.C.TX., and as depicted in TXDOT R.O.W. Strip Map CSJ No. 0337-01-023, for the northeast corner of said Lot 4-F, same being the northwest corner of said Lot 4-D and of the parcel described herein;

2) **THENCE, North 87°39'07" East**, departing the common line of said Lot 4-F and said Lot 4-D, with the existing south right-of-way line of said S.H. 29, a distance of **204.09 feet** to a calculated point, for the northwest corner of Lot 4C, Final Plat of Wolf Ranch Subdivision, a Resubdivision of Block "A", Lot 4-C, as recorded in Cabinet BB, Slides 108-109, P.R.W.C.TX, described in a deed to Steak N Shake Operations, INC., recorded in Document No. 2006024177, O.P.R.W.C.TX., same being the northeast corner of said Lot 4-D and of the parcel described herein;

3) **THENCE**, **South 02°13'01" East**, departing the existing south right-of-way line of said S.H. 29, with the common line of said Lot 4-D and said Lot 4C, a distance of **6.00 feet** to a 5/8-inch iron rod with a 2-inch aluminum cap stamped TXDOT set 75.00 feet right of S.H. 29 E.C.S. 167+35.71 on the proposed south right-of-way line of S.H. 29, from which a mag nail with a shiner stamped "Bury & Partners" found on the north line of said Lot 3, for the southwest corner of said Lot 4C, same being the southeast corner of said Lot 4-D, bears South 02°13'01" East, a distance of 238.47 feet;

Unofficial Document

EXHIBIT "A"

County: Williamson
Highway: S.H. 29
Limits: From 0.161 Miles West of Wolf Ranch Parkway To I.H. 35 April 5, 2024
CCSJ: 0337-01-053
Parcel No.: 4

4) **THENCE**, **South 87°39'07" West**, departing the common line of said Lot 4-D and said Lot 4C, with the proposed south right-of-way line of said S.H. 29, over and across said Lot 4-D, a distance of **204.09 feet** to the **POINT OF BEGINNING**, and containing 0.0281 acres (1,225 sq. ft.) of land.

Bearing Basis:
All bearings shown are based on NAD83/2011 Texas Coordinate System, Central Zone (4203). All distances shown are surface and may be converted to grid by dividing by a Surface Adjustment Factor of 1.00011. All coordinates shown are in surface and may be converted by dividing by the same factor. Project units are in U.S. Survey Feet.

THE STATE OF TEXAS §
§ KNOW ALL MEN BY THESE PRESENTS:
COUNTY OF TRAVIS §

That I, Scott C. Brashear, a Registered Professional Land Surveyor, do hereby certify that the above description is true and correct to the best of my knowledge and belief and that the property described herein was determined by a survey made on the ground under my direction and supervision.

WITNESS MY HAND AND SEAL at Austin, Travis County, Texas, on the date shown below.

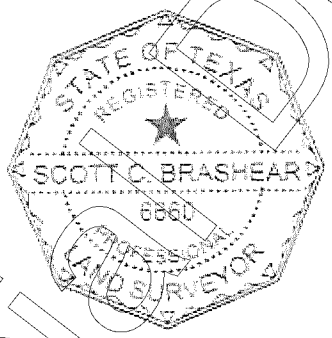

SURVEYING AND MAPPING, LLC
4801 Southwest Pkwy
Building Two, Suite 100
Austin, Texas 78735
TX. Firm No. 10064300

Scott C. Brashear 4/5/2024
Scott C. Brashear Date
Registered Professional Land Surveyor
No. 6660 – State of Texas

Unofficial Document

EXHIBIT "B"

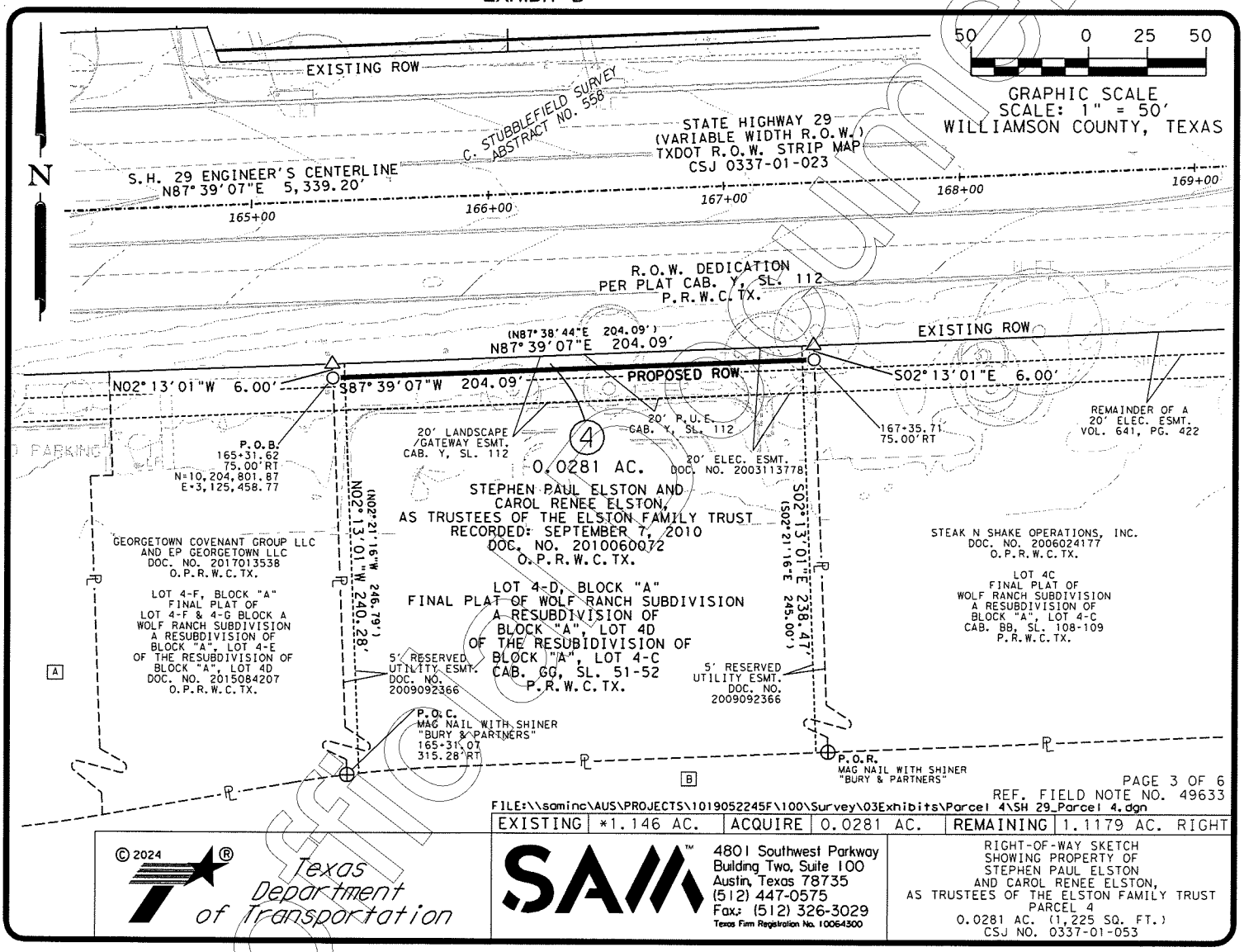

PAGE 3 OF 6
REF. FIELD NOTE NO. 49633
FILE:\\saminc\AUS\PROJECTS\1019052245F\100\Survey\03Exhibits\Parcel 4\SH 29_Parcel 4.dgn

EXISTING	*1.146 AC.	ACQUIRE	0.0281 AC.	REMAINING	1.1179 AC. RIGHT

© 2024

Texas Department of Transportation

SAM™
4801 Southwest Parkway
Building Two, Suite 100
Austin, Texas 78735
(512) 447-0575
Fax: (512) 326-3029
Texas Firm Registration No. 10064300

RIGHT-OF-WAY SKETCH
SHOWING PROPERTY OF
STEPHEN PAUL ELSTON
AND CAROL RENEE ELSTON,
AS TRUSTEES OF THE ELSTON FAMILY TRUST
PARCEL 4
0.0281 AC. (1,225 SQ. FT.)
CSJ NO. 0337-01-053

Unofficial Document

SCHEDULE B:

THIS SURVEY HEREON WAS PREPARED IN CONJUNCTION WITH THAT COMMITMENT FOR TITLE INSURANCE GF NO. 24-779323-GT, ISSUED BY FIRST NATIONAL TITLE INSURANCE COMPANY, EFFECTIVE DATE JANUARY 18, 2024, AND ISSUED DATE JANUARY 25, 2024.

10. THE FOLLOWING MATTERS AND ALL TERMS OF THE DOCUMENTS CREATING OR OFFERING EVIDENCE OF THE MATTERS (WE MUST INSERT MATTERS OR DELETE THIS EXCEPTION.):

A. ALL LEASES, GRANTS, EXCEPTIONS OR RESERVATIONS OF COAL, LIGNITE, OIL, GAS AND OTHER MINERALS, TOGETHER WITH ALL RIGHTS, PRIVILEGES AND IMMUNITIES RELATING THERETO, APPEARING IN THE PUBLIC RECORDS WHETHER LISTED IN SCHEDULE B OR NOT. THERE MAY BE LEASES, GRANTS, EXCEPTIONS OR RESERVATIONS OF MINERAL INTEREST THAT ARE NOT LISTED.

B. ALL LEASES, GRANTS, EXCEPTIONS OR RESERVATIONS OF THE GEOTHERMAL ENERGY AND ASSOCIATED RESOURCES BELOW THE SURFACE OF THE LAND, TOGETHER WITH ALL RIGHTS, PRIVILEGES, AND IMMUNITIES RELATING THERETO, APPEARING IN THE PUBLIC RECORDS WHETHER LISTED IN SCHEDULE B OR NOT. THERE MAY BE LEASES, GRANTS, EXCEPTIONS OR RESERVATIONS OF THE GEOTHERMAL ENERGY AND ASSOCIATED RESOURCES BELOW THE SURFACE OF THE LAND THAT ARE NOT LISTED.

C. ALL VISIBLE AND APPARENT EASEMENTS OR USES AND ALL UNDERGROUND EASEMENTS OR USES, THE EXISTENCE OF WHICH MAY ARISE BY UNRECORDED GRANT OR BY USE.

D. RIGHTS OF PARTIES IN POSSESSION.

E. RIGHTS OF TENANTS, AS TENANTS ONLY, UNDER UNRECORDED LEASES OR RENTAL AGREEMENTS.

F. RIGHTS OF THE PUBLIC, THE STATE OF TEXAS AND THE MUNICIPALITY IN AND TO THAT PORTION OF SUBJECT PROPERTY, IF ANY, LYING WITHIN THE BOUNDARIES OF ANY ROADWAY, PUBLIC OR PRIVATE.

G. ANY AND ALL MATTERS WHICH WOULD BE SHOWN ON A CURRENT, CORRECT SURVEY OF THE PROPERTY.

H. EASEMENT(S) AND/OR BUILDING LINE(S) AFFECTING THE SUBJECT PROPERTY AS SHOWN ON MAP OR PLAT RECORDED IN CABINET GG, SLIDE 51, MAP OR PLAT RECORDS, WILLIAMSON COUNTY, TEXAS. (AFFECTS PARCEL AS SHOWN)

I. EASEMENT BY AND BETWEEN R.R. WOOD, TO TEXAS POWER & LIGHT COMPANY, OF DALLAS TEXAS, DATED JULY 26, 1928, AND RECORDED SEPTEMBER 10, 1928 IN/UNDER VOLUME 239, PAGE 56, OF THE REAL PROPERTY RECORDS OF WILLIAMSON COUNTY, TEXAS. (MAY AFFECT. NOT ABLE TO PLOT)

J. RIGHT OF WAY EASEMENT BY AND BETWEEN W.W. DUNAGAN AND WIFE, RUTH DUNAGAN, TO TEXAS POWER & LIGHT COMPANY, OF DALLAS TEXAS, DATED MAY 28, 1936, AND RECORDED JULY 14, 1936 IN/UNDER VOLUME 280, PAGE 541, OF THE REAL PROPERTY RECORDS OF WILLIAMSON COUNTY, TEXAS. (MAY AFFECT. NOT ABLE TO PLOT)

K. EASEMENT BY AND BETWEEN JAY L. WOLF, TO TEXAS POWER & LIGHT COMPANY, OF DALLAS TEXAS, DATED NOVEMBER 12, 1963, AND RECORDED APRIL 6, 1967, IN/UNDER VOLUME 467, PAGE 400, OF THE REAL PROPERTY RECORDS OF WILLIAMSON COUNTY, TEXAS. (MAY AFFECT. NOT ABLE TO PLOT)

L. RIGHT OF WAY AND EASEMENT BY AND BETWEEN JAY L. WOLF AND WIFE, BETTY WOLF, TO THE CITY OF GEORGETOWN, DATED APRIL 28, 1976, AND RECORDED JULY 22, 1976, IN/UNDER VOLUME 641, PAGE 422, OF THE REAL PROPERTY RECORDS OF WILLIAMSON COUNTY, TEXAS. (AFFECTS PARCEL AS SHOWN)

M. RIGHT OF WAY AND EASEMENT BY AND BETWEEN JAY WOLF, TO TEXAS POWER & LIGHT COMPANY, OF DALLAS TEXAS, DATED JUNE 7, 1980, AND RECORDED JULY 8, 1980, IN/UNDER VOLUME 801, PAGE 303, OF THE REAL PROPERTY RECORDS OF WILLIAMSON COUNTY, TEXAS. (MAY AFFECT. NOT ABLE TO PLOT)

N. UTILITY EASEMENT BY AND BETWEEN JAY L. WOLF, TO THE CITY OF GEORGETOWN, DATED APRIL 6, 1995, RECORDED IN/UNDER VOLUME 2715, PAGE 107, OF THE REAL PROPERTY RECORDS OF WILLIAMSON COUNTY, TEXAS. (DOES NOT AFFECT)

O. ALL OF THE TERMS, CONDITIONS AND PROVISIONS OF THAT CERTAIN DEVELOPMENT AGREEMENT REGARDING DEVELOPMENT OF WOLF RANCH BY AND BETWEEN THE CITY OF GEORGETOWN, A TEXAS HOME RULE MUNICIPAL CORPORATION, AND FORESTVILLE ASSOCIATES, A MARYLAND GENERAL PARTNERSHIP, DATED SEPTEMBER 11, 2003 AND RECORDED SEPTEMBER 12, 2003 AS CLERK'S FILE NO. 2003089648, AND RE-RECORDED DECEMBER 12, 2003 AS COUNTY CLERK'S FILE NUMBER 2003119077, AS AMENDED BY FIRST AMENDMENT TO THE DEVELOPMENT AGREEMENT, BY AND BETWEEN SPG WOLF RANCH, L.P., A TEXAS LIMITED PARTNERSHIP AND FORESTVILLE ASSOCIATES, A MARYLAND GENERAL PARTNERSHIP, DATED APRIL 25, 2006, AND RECORDED JUNE 21, 2006, IN/UNDER COUNTY CLERK'S FILE NUMBER 2006051008, ALL OF THE REAL PROPERTY RECORDS OF WILLIAMSON COUNTY, TEXAS. (DOES NOT AFFECT)

P. ACCESS EASEMENT AGREEMENT, BY AND BETWEEN BETTIE WOLF, ETAL, AND SPG WOLF RANCH, L.P., A TEXAS LIMITED PARTNERSHIP, DATED OCTOBER 16, 2003, AND RECORDED OCTOBER 17, 2003, IN/UNDER COUNTY CLERK'S FILE NUMBER 2003101405, OF THE REAL PROPERTY RECORDS OF WILLIAMSON COUNTY, TEXAS. (MAY AFFECT. NOT ABLE TO PLOT)

Q. ELECTRIC EASEMENT BY AND BETWEEN SPG WOLF RANCH, L.P., A TEXAS LIMITED PARTNERSHIP, TO THE CITY OF GEORGETOWN, DATED NOVEMBER 20, 2003, AND RECORDED NOVEMBER 24, 2003, IN/UNDER COUNTY CLERK'S FILE NUMBER 2003113778, OF THE REAL PROPERTY RECORDS OF WILLIAMSON COUNTY, TEXAS. (AFFECTS PARCEL AS SHOWN)

R. ELECTRIC EASEMENT BY AND BETWEEN SPG WOLF RANCH, L.P., A TEXAS LIMITED PARTNERSHIP, TO THE CITY OF GEORGETOWN, A MUNICIPALITY, DATED NOVEMBER 20, 2003, AND RECORDED NOVEMBER 24, 2003, IN/UNDER COUNTY CLERK'S FILE NUMBER 2003113779, OF THE REAL PROPERTY RECORDS OF WILLIAMSON COUNTY, TEXAS. (DOES NOT AFFECT)

S. DRAINAGE EASEMENT BY AND BETWEEN SPG WOLF RANCH, L.P., A TEXAS LIMITED PARTNERSHIP, TO THE CITY OF GEORGETOWN, A MUNICIPALITY, DATED NOVEMBER 20, 2003, AND RECORDED NOVEMBER 24, 2003, IN/UNDER COUNTY CLERK'S FILE NUMBER 2003113780, OF THE REAL PROPERTY RECORDS OF WILLIAMSON COUNTY, TEXAS. (DOES NOT AFFECT)

T. UTILITY CORRIDOR EASEMENT BY AND BETWEEN SPG WOLF RANCH, L.P., A TEXAS LIMITED PARTNERSHIP, TO THE CITY OF GEORGETOWN, A MUNICIPALITY, DATED NOVEMBER 20, 2003, AND RECORDED NOVEMBER 24, 2003, IN/UNDER COUNTY CLERK'S FILE NUMBER 2003113782, OF THE REAL PROPERTY RECORDS OF WILLIAMSON COUNTY, TEXAS. (DOES NOT AFFECT)

U. WATER/WASTEWATER EASEMENT BY AND BETWEEN SPG WOLF RANCH, L.P., A TEXAS LIMITED PARTNERSHIP, TO THE CITY OF GEORGETOWN, A MUNICIPALITY, DATED NOVEMBER 20, 2003, FILED NOVEMBER 24, 2003, RECORDED IN/UNDER COUNTY CLERK'S FILE NUMBER 2003113783, OF THE REAL PROPERTY RECORDS OF WILLIAMSON COUNTY, TEXAS. (DOES NOT AFFECT)

V. ALL OF THE TERMS, CONDITIONS AND PROVISIONS OF THAT CERTAIN OPERATION AND EASEMENT AGREEMENT BY AND BETWEEN TARGET CORPORATION, A MINNESOTA CORPORATION, AND SPG WOLF RANCH, LP, A TEXAS LIMITED PARTNERSHIP, DATED DECEMBER 31, 2003 AND RECORDED DECEMBER 31, 2003 AS COUNTY CLERK'S FILE NUMBER 2003124160, AND SUPPLEMENTAL AGREEMENT BY AND BETWEEN SPG WOLF RANCH, L.P., A TEXAS LIMITED PARTNERSHIP, AND KOHL'S TEXAS, LP, A TEXAS LIMITED PARTNERSHIP, DATED SEPTEMBER 20, 2004 AND RECORDED SEPTEMBER 20, 2004 AS COUNTY CLERK'S FILE NUMBER 2004073657, AS AFFECTED BY THAT CERTAIN FIRST AMENDMENT TO OPERATING AND EASEMENT AGREEMENT, DATED SEPTEMBER 19, 2007 AND RECORDED AS COUNTY CLERK'S FILE NUMBER 2007096288, ALL OF THE REAL PROPERTY RECORDS OF WILLIAMSON COUNTY, TEXAS, CREATING A NON-EXCLUSIVE, PERPETUAL EASEMENT FOR THE PASSAGE AND ACCOMMODATION OF PEDESTRIANS. (MAY AFFECT. NOT ABLE TO PLOT)

W. TERMS, CONDITIONS AND PROVISION AS CONTAINED IN THAT CERTAIN SIGN EASEMENT AGREEMENT EXECUTED BY AND BETWEEN SPG WOLF RANCH, L.P., A TEXAS LIMITED PARTNERSHIP, AND KOHL'S TEXAS, L.P., A TEXAS LIMITED PARTNERSHIP, DATED SEPTEMBER 20, 2004, AND RECORDED SEPTEMBER 20, 2004, IN/UNDER COUNTY CLERK'S FILE NUMBER 2004073659, OF THE REAL PROPERTY RECORDS OF WILLIAMSON COUNTY, TEXAS. (MAY AFFECT. NOT ABLE TO PLOT)

X. TERMS, PROVISIONS, AND CONDITIONS OF CITY OF GEORGETOWN ORDINANCE NO. 2004-46 BY THE CITY OF GEORGETOWN LEVYING ASSESSMENTS FOR THE COST OF CERTAIN IMPROVEMENTS TO BE PROVIDED IN WOLF RANCH PUBLIC IMPROVEMENT DISTRICT NO. 1, RECORDED AUGUST 31, 2005 UNDER COUNTY CLERK'S FILE NUMBER 2005068647, OF THE REAL PROPERTY RECORDS, WILLIAMSON COUNTY, TEXAS. (DOES NOT AFFECT)

REF. FIELD NOTE NO. 49633

FILE:\\saminc\AUS\PROJECTS\1019052245F\100\Survey\03Exhibits\Parcel 4\SH 29_Parcel 4.dgn

EXISTING	*1.146 AC.	ACQUIRE	0.0281 AC.	REMAINING	1.1179 AC. RIGHT

© 2024

Texas Department of Transportation

SAM™
4801 Southwest Parkway
Building Two, Suite 100
Austin, Texas 78735
(512) 447-0575
Fax: (512) 326-3029
Texas Firm Registration No. 10064300

RIGHT-OF-WAY SKETCH
SHOWING PROPERTY OF
STEPHEN PAUL ELSTON
AND CAROL RENEE ELSTON,
AS TRUSTEES OF THE ELSTON FAMILY TRUST
PARCEL 4
0.0281 AC. (1,225 SQ. FT.)
CSJ NO. 0337-01-053

Unofficial Document

Y. LAND LEASE AGREEMENT BY AND BETWEEN JAY L. WOLF, TO PEARCE OUTDOOR DISPLAY, DATED JULY 11, 1991, RECORDED JULY 17, 1991, IN/UNDER VOLUME 2035, PAGE 852, OF THE REAL PROPERTY RECORDS OF WILLIAMSON COUNTY, TEXAS. (DOES NOT AFFECT)

Z. LAND LEASE AGREEMENT BY AND BETWEEN JAY L. WOLF, TO PEARCE OUTDOOR DISPLAY, DATED JULY 11, 1991, RECORDED AUGUST 7, 1991, RECORDED IN/UNDER VOLUME 2042, PAGE 739, OF THE REAL PROPERTY RECORDS OF WILLIAMSON COUNTY, TEXAS. (DOES NOT AFFECT)

AA. UNRECORDED LAND LEASE AGREEMENT BY THE KAY WOLFE ESTATE TO PEARCE OUTDOOR DISPLAY, DATED JULY 1, 1996 AND AMENDED NOVEMBER 21, 1998 AND ASSIGNED TO ADVANTAGE OUTDOOR COMPANY, LLC, AS EVIDENCED BY WARRANTY DEED BY AND BETWEEN BETTIE WOLF, ETAL TO SPG WOLF RANCH, L.P., A TEXAS LIMITED PARTNERSHIP DATED OCTOBER 16, 2003, AND RECORDED OCTOBER 17, 2003, IN/UNDER COUNTY CLERK'S FILE NUMBER 2003101403, OF THE REAL PROPERTY RECORDS OF WILLIAMSON COUNTY, TEXAS. (MAY AFFECT. NOT ABLE TO PLOT)

BB. MEMORANDUM OF SHOPPING CENTER LEASE AGREEMENT BY AND BETWEEN SPG WOLF RANCH, L.P., A TEXAS LIMITED PARTNERSHIP, AS LESSOR, AND MICHAELS STORES, INC., A DELAWARE CORPORATION, AS LESSEE, DATED AUGUST 11, 2004, AND RECORDED NOVEMBER 19, 2004 IN/UNDER COUNTY CLERK'S FILE NUMBER 2004090198, OF THE REAL PROPERTY RECORDS OF WILLIAMSON COUNTY, TEXAS. (MAY AFFECT. NOT ABLE TO PLOT)

CC. MEMORANDUM OF LEASE BY AND BETWEEN OFFICE DEPOT OF TEXAS, L.P., A DELAWARE LIMITED PARTNERSHIP, AND SPG WOLF RANCH, L.P., A TEXAS LIMITED PARTNERSHIP, DATED NOVEMBER 30, 2004 AND RECORDED JANUARY 27, 2005 AS COUNTY CLERK'S FILE NUMBER 2005006547, OF THE REAL PROPERTY RECORDS OF WILLIAMSON COUNTY, TEXAS. (DOES NOT AFFECT)

DD. MEMORANDUM OF LEASE AGREEMENT BY AND BETWEEN SPG WOLF RANCH, L.P., A TEXAS LIMITED PARTNERSHIP, AS LESSOR, AND PIER 1 IMPORTS (U.S.), INC., A DELAWARE CORPORATION, AS LESSEE, DATED FEBRUARY 9, 2005, AND RECORDED MAY 5, 2005 IN/UNDER COUNTY CLERK'S FILE NUMBER 2005033509, OF THE REAL PROPERTY RECORDS OF WILLIAMSON COUNTY, TEXAS. (DOES NOT AFFECT)

EE. MEMORANDUM OF LEASE AGREEMENT BY AND BETWEEN SPG WOLF RANCH, L.P., A TEXAS LIMITED PARTNERSHIP, AS LESSOR, AND PETSMART, INC., A DELAWARE CORPORATION, AS LESSEE, DATED FEBRUARY 23, 2005, AND RECORDED DECEMBER 27, 2005 IN/UNDER COUNTY CLERK'S FILE NUMBER 2005101775, OF THE REAL PROPERTY RECORDS OF WILLIAMSON COUNTY, TEXAS. (MAY AFFECT. NOT ABLE TO PLOT)

FF. MEMORANDUM OF LEASE AGREEMENT BY AND BETWEEN SPG WOLF RANCH, L.P., A TEXAS LIMITED PARTNERSHIP, AS LESSOR, AND BEST BUY STORES, L.P., A VIRGINIA LIMITED PARTNERSHIP, AS LESSEE, DATED JANUARY 24, 2006, AND RECORDED FEBRUARY 2, 2006 IN/UNDER COUNTY CLERK'S FILE NUMBER 2006008194, OF THE REAL PROPERTY RECORDS OF WILLIAMSON COUNTY, TEXAS. (MAY AFFECT. NOT ABLE TO PLOT)

GG. MEMORANDUM OF LEASE AGREEMENT BY AND BETWEEN SPG WOLF RANCH, L.P., A TEXAS LIMITED PARTNERSHIP, AS LESSOR, AND MARMAXX OPERATING CORP., A DELAWARE CORPORATION, AS LESSEE, DATED MARCH 14, 2005, AND RECORDED NOVEMBER 27, 2006 IN/UNDER COUNTY CLERK'S FILE NUMBER 2006102728, OF THE REAL PROPERTY RECORDS OF WILLIAMSON COUNTY, TEXAS. (DOES NOT AFFECT)

HH. UNRECORDED LAND LEASE AGREEMENT EXECUTED BY THE JAY WOLF ESTATE TO PEARCE OUTDOOR DISPLAY, DATED JULY 1, 1996, AND AMENDED NOVEMBER 21, 1998 AND ASSIGNED TO ADVANTAGE OUTDOOR COMPANY, LLC. (MAY AFFECT)

II. UTILITY EASEMENT GRANTED BY SPG WOLF RANCH, L.P., A TEXAS LIMITED PARTNERSHIP, TO THE CITY OF GEORGETOWN, DATED AUGUST 13, 2004 AND RECORDED AUGUST 30, 2004 AS CLERK'S FILE NO. 2004068571, IN THE REAL PROPERTY RECORDS OF WILLIAMSON COUNTY, TEXAS. (DOES NOT AFFECT)

JJ. A 25' WIDE TEMPORARY CONSTRUCTION EASEMENT AND GRANTED BY TEMPORARY CONSTRUCTION EASEMENT BY JAY L. WOLF TO THE CITY OF GEORGETOWN, A TEXAS MUNICIPAL CORPORATION, DATED APRIL 6, 1995 AND RECORDED MAY 1, 1995 IN VOLUME 2715, PAGE 112, IN THE REAL PROPERTY RECORDS OF WILLIAMSON COUNTY, TEXAS. (DOES NOT AFFECT)

KK. DRAINAGE EASEMENT BY AND BETWEEN SPG WOLF RANCH, L.P. A TEXAS LIMITED PARTNERSHIP, AND THE CITY OF GEORGETOWN, DATED NOVEMBER 20, 2003 AND RECORDED NOVEMBER 24, 2003 AS CLERK'S FILE NO. 2003113781, REAL PROPERTY RECORDS, WILLIAMSON COUNTY, TEXAS. (DOES NOT AFFECT)

LL. EDWARDS AQUIFER PROTECTION PLAN APPROVAL ATTACHED TO DEED RECORDATION AFFIDAVIT BY SPG WOLF RANCH, LP, A TEXAS LIMITED LIABILITY PARTNERSHIP, DATED FEBRUARY 20, 2004 AND RECORDED FEBRUARY 23, 2004 IN CLERK'S FILE NO. 2004013553, OF THE REAL PROPERTY RECORDS OF WILLIAMSON COUNTY, TEXAS. (MAY AFFECT)

MM. WORK ASSIGNMENT SUPPLEMENT FORM OF EASEMENT BY AND BETWEEN SPG WOLF RANCH, LP, A TEXAS LIMITED LIABILITY PARTNERSHIP AND ATMOS ENERGY CORPORATION, DATED OCTOBER 16, 2008 AND RECORDED NOVEMBER 13, 2008 AS CLERK'S FILE NO. 2008085192, OF THE REAL PROPERTY RECORDS OF WILLIAMSON COUNTY, TEXAS. (DOES NOT AFFECT)

NN. ACCESS EASEMENT BETWEEN STEAK N SHAKE OPERATIONS, INC., AND SPG WOLF RANCH, L.P., DATED DECEMBER 10, 2009, AND RECORDED DECEMBER 17, 2009, AS CLERK'S FILE NO. 2009091677, IH REAL PROPERTY RECORDS OF WILLIAMSON COUNTY, TEXAS. (MAY AFFECT. NOT ABLE TO PLOT)

OO. WATER LINE EASEMENT BETWEEN SPG WOLF RANCH, L.P., AND THE CITY OF GEORGETOWN DATED DECEMBER 9, 2009, AND RECORDED DECEMBER 17, 2009, AS CLERK'S FILE NO. 2009091678, IN REAL PROPERTY RECORDS OF WILLIAMSON COUNTY, TEXAS. (DOES NOT AFFECT)

PP. WATER LINE EASEMENT BETWEEN STEAK N SHAKE OPERATIONS, INC., AND THE CITY OF GEORGETOWN DATED DECEMBER 9, 2009, AND RECORDED DECEMBER 17, 2009, AS CLERK'S FILE NO. 2009091679, IN REAL PROPERTY RECORDS OF WILLIAMSON COUNTY, TEXAS. (DOES NOT AFFECT)

QQ. EASEMENT AS SET FORTH IN SPECIAL WARRANTY DEED DATED DECEMBER 17, 2009, FILED DECEMBER 22, 2009, RECORDED IN CLERK'S FILE NO. 2009092366, REAL PROPERTY RECORDS, WILLIAMSON COUNTY, TEXAS. (AFFECTS PARCEL AS SHOWN)

RR. THE TERMS, PROVISIONS, EASEMENTS, COVENANTS, RESTRICTIONS AS SET FORTH IN INSTRUMENTS RECORDED IN CLERK'S FILE NOS. 2003101404, 2003124160, 2005068647, 2005028757, 2005024788, 2005028767, 2005102442, 2006000597, 2006004090, 2006024178, 2009092368, 2011087597, 2016030815, 2017013539, 2017113189, 2022089914, 2023099707, 2023099708, 2014079108, REAL PROPERTY RECORDS, WILLIAMSON COUNTY, TEXAS; WHEN TAKEN WITH ALL AMENDMENTS AND/OR SUPPLEMENTS THERETO. (MAY AFFECT)

PAGE 5 OF 6
REF. FIELD NOTE NO. 49633
FILE:\\saminc\AUS\PROJECTS\1019052245F\100\Survey\03Exhibits\Parcel 4\SH 29_Parcel 4.dgn

EXISTING	*1.146 AC.	ACQUIRE	0.0281 AC.	REMAINING	1.1179 AC. RIGHT

© 2024

Texas Department of Transportation

SAM™
4801 Southwest Parkway
Building Two, Suite 100
Austin, Texas 78735
(512) 447-0575
Fax: (512) 326-3029
Texas Firm Registration No. 10064300

RIGHT-OF-WAY SKETCH
SHOWING PROPERTY OF
STEPHEN PAUL ELSTON
AND CAROL RENEE ELSTON,
AS TRUSTEES OF THE ELSTON FAMILY TRUST
PARCEL 4
0.0281 AC. (1,225 SQ. FT.)
CSJ NO. 0337-01-053

Unofficial Document

LEGEND

■	TYPE I CONCRETE MONUMENT FOUND
⊡	TYPE II BRONZE DISK IN CONCRETE FOUND
⊙	TYPE II BRONZE DISK IN CONCRETE SET
○	5/8" IRON ROD SET WITH TXDOT ALUMINUM CAP
●	5/8" IRON ROD FOUND (AS NOTED)
⊕	NAIL FOUND (AS NOTED)
⬡	FENCE POST (TYPE NOTED)
△	CALCULATED POINT
℄	PROPERTY LINE
( )	RECORD INFORMATION
P.O.B.	POINT OF BEGINNING
P.O.C.	POINT OF COMMENCING
P.O.R.	POINT OF REFERENCE
N.T.S.	NOT TO SCALE
P.R.W.C.TX.	PLAT RECORDS OF WILLIAMSON COUNTY, TEXAS
O.P.R.W.C.TX.	OFFICIAL PUBLIC RECORDS OF WILLIAMSON COUNTY, TEXAS
---/---	DISTANCE NOT TO SCALE
---Z---	DEED LINE (COMMON OWNERSHIP)
----------	PROPERTY LINE
———	EXISTING RIGHT-OF-WAY
———	PARCEL LIMITS
- - - - -	PROPOSED DRAINAGE EASEMENT
----------	EXISTING EASEMENT LINE

N

A

WPG WOLF RANCH, LLC
TRACT 3
DOC. NO. 2014044665
O.P.R.W.C.TX.

LOT 4-G, BLOCK "A"
FINAL PLAT OF
LOT 4-F & 4-G BLOCK A
WOLF RANCH SUBDIVISION
A RESUBDIVISION OF BLOCK "A", LOT 4-E OF THE
RESUBDIVISION OF BLOCK "A", LOT 4D
DOC. NO. 2015084207
O.P.R.W.C.TX.

B

TARGET CORPORATION
DOC. NO. 2003124159
O.P.R.W.C.TX.

LOT 3, BLOCK "A"
WOLF RANCH SUBDIVISION
CAB. Y, SL. 112-115
P.R.W.C.TX.

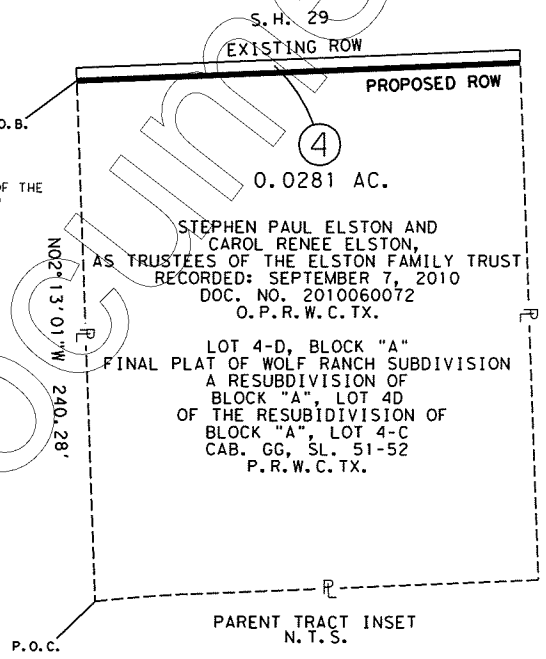

PARENT TRACT INSET
N.T.S.

NOTES:

1. ALL PROJECT COORDINATES AND BEARINGS ARE GRID NORTH BASED ON THE TEXAS COORDINATE SYSTEM, CENTRAL ZONE (4203), NAD 83 (2011), EPOCH 2010.0. ALL SURFACE COORDINATES SHOWN HEREON MAY BE CONVERTED TO GRID BY DIVIDING BY A SURFACE ADJUSTMENT FACTOR OF 1.00011. UNITS: U.S. SURVEY FEET. SURVEY DATE: AUGUST, 2023
2. THIS SURVEY WAS COMPLETED WITHOUT THE BENEFIT OF TITLE REPORT, THERE MAY BE EASEMENTS OR OTHER MATTERS, RECORDED OR UNRECORDED, THAT ARE NOT SHOWN.
3. A PROPERTY DESCRIPTION OF EVEN DATE WAS PREPARED IN CONJUNCTION WITH THIS PARCEL PLAT.

* AREA CALCULATED BY SAM, LLC.

I HEREBY CERTIFY THAT THIS SURVEY WAS MADE ON THE GROUND UNDER MY DIRECTION AND SUPERVISION AND THAT THIS PLAT IS TRUE AND CORRECT TO THE BEST OF MY KNOWLEDGE AND BELIEF.

STATE OF TEXAS
REGISTERED
SCOTT C. BRASHEAR
6660
PROFESSIONAL
LAND SURVEYOR

SCOTT C. BRASHEAR
REGISTERED PROFESSIONAL LAND SURVEYOR
NO. 6660, STATE OF TEXAS

4/5/2024
DATE

PAGE 6 OF 6
REF. FIELD NOTE NO. 49633

FILE:\\saminc\AUS\PROJECTS\1019052245F\100\Survey\03Exhibits\Parcel 4\SH 29_Parcel 4.dgn

EXISTING	*1.146 AC.	ACQUIRE	0.0281 AC.	REMAINING	1.1179 AC. RIGHT

© 2024

Texas Department of Transportation

SAM™
4801 Southwest Parkway
Building Two, Suite 100
Austin, Texas 78735
(512) 447-0575
Fax: (512) 326-3029
Texas Firm Registration No. 10064300

RIGHT-OF-WAY SKETCH
SHOWING PROPERTY OF
STEPHEN PAUL ELSTON
AND CAROL RENEE ELSTON,
AS TRUSTEES OF THE ELSTON FAMILY TRUST
PARCEL 4
0.0281 AC. (1,225 SQ. FT.)
CSJ NO. 0337-01-053

Unofficial Document

ELECTRONICALLY RECORDED
OFFICIAL PUBLIC RECORDS

2025076213

Pages: 11 Fee: $69.00
09/26/2025 01:41 PM
OSALINAS



Nancy E. Rister, County Clerk
Williamson County,Texas

Unofficial Document

NOTICE OF AWARD OF SPECIAL COMMISSIONERS

The State of Texas County of Williamson

Kristina W Silcocks
Phelps Dunbar LLP
3600 N Capitol of Texas
Highway Suite B300
Austin TX 78746

Certified Mail # 95890710527009319267 28

Pursuant to Property Code Art. 21.049, attached herein is a certified copy of the Award of Special Commissioners in Cause No.25-0379-CC2; THE CITY OF GEORGETOWN, TEXAS vs. BIGLARI REAL ESTATE CORPORATION, ET AL. in the County Court at Law #2 of Williamson County, Texas. The Award was signed by Judge Laura Barker and filed on the 25th day of September, 2025.

Issued and given under my hand and the seal of said Court at office in Georgetown, Texas, on this the 25th day of September, 2025.

COUNTY COURT AT LAW NO. 2 * WILLIAMSON COUNTY, TEXAS *

NANCY E. RISTER, County Clerk
Williamson County, Texas

By: *Kelly Phillips,* Deputy

PROJECT: SH29
PARCEL: 5

CAUSE NO. 25-0379-CC2

THE CITY OF GEORGETOWN, TEXAS Plaintiff, vs. BIGLARI REAL ESTATE CORPORATION, ET AL. Defendants.	CONDEMNATION PROCEEDING FILED IN THE COUNTY COURT AT LAW NO. 2 WILLIAMSON COUNTY, TEXAS

AWARD OF SPECIAL COMMISSIONERS

On the 24th day of September, 2025, in Williamson County, Texas, the above-styled proceeding came on to be heard before the undersigned Special Commissioners, three disinterested freeholders in Williamson County, Texas, appointed as Special Commissioners by the Judge of County Court at Law No. 2, Williamson County, Texas to assess the compensation and damages, if any, caused by these proceedings, and came Plaintiff, City of Georgetown, Texas, a municipal corporation, located in Williamson County, Texas, represented by Kristina W. Silcocks of Phelps Dunbar LLP, and the Defendants, Chick-Fil-A, Inc., Biglari Real Estate Corporation, SPG Wolf Ranch, L.P., and WPG Wolf Ranch, LLC. The Special Commissioners made the following findings:

I.

That on the 12th day of March, 2025, Plaintiff filed an Original Petition for Condemnation in the County Court at Law No. 2 of Williamson County Texas; wherein, upon the facts and for the purposes therein stated, Plaintiff, through the duly elected City Council for the City of Georgetown, Texas, duly incorporated, organized and existing under and by virtue of its charter adopted by the electorate pursuant to Article XI, Section 5 of the Texas Constitution, is vested with the power and authority to

CERTIFIED TO BE A TRUE AND CORRECT COPY
NANCY E. RISTER, County Clerk
Williamson County

appropriate private property for public use and purposes by condemnation proceedings and to exercise all the powers of eminent domain under Section 251.001 of the Texas Local Government Code, has determined that it is necessary to acquire fee simple interests in said Property, and Plaintiff seeks to acquire and condemn the Property and interests described below, with such Property vesting in the City of Georgetown, Texas, to wit:

Parcel 5:
A 0.0299-ACRE (1,302 SQ. FT.) PARCEL OF LAND LOCATED IN THE C. STUBBLEFIELD SURVEY, ABSTRACT NO. 558, WILLIAMSON COUNTY, TEXAS, BEING A PORTION OF LOT 4C, FINAL PLAT OF WOLF RANCH SUBDIVISION, A RESUBDIVISION OF BLOCK "A", LOT 4-C, AS RECORDED IN CABINET BB, SLIDES 108-109, PLAT RECORDS OF WILLIAMSON COUNTY, TEXAS (P.R.W.C.TX.), DESCRIBED IN A DEED TO STEAK N SHAKE OPERATIONS, INC., RECORDED MARCH 29, 2006 IN DOCUMENT NO. 2006024177, OFFICIAL PUBLIC RECORDS OF WILLIAMSON COUNTY, TEXAS, SAID 0.0299 ACRES (1,302 SQUARE FOOT) TRACT OF LAND BEING MORE PARTICULARLY DESCRIBED BY METES AND BOUNDS IN EXHIBIT "A" ATTACHED HERETO AND MADE A PART HEREOF FOR ALL PURPOSES.

II.

That upon consideration of the Petition for Condemnation filed by Plaintiff, the Judge of County Court at Law No. 2, Williamson County, Texas, did on March 13, 2025, appoint Leland Enochs, Tom Green, and Ted W. Hejl, three disinterested real property owners who reside in Williamson County, Texas, as Special Commissioners to assess compensation and damages, if any, caused by the taking of said property. The Special Commissioners did on August 28, 2025, sign the Order Setting Hearing Before Special Commissioners, setting the Hearing for the 24th day of September, 2025 at 10:00 a.m. at the Georgetown Public Library, Room 211, 402 W. 8th Street, Georgetown, Texas 78626. Thereafter, each Special Commissioner took the oath prescribed by law, which oaths are on file with the papers in this cause.

CERTIFIED TO BE A TRUE AND
CORRECT COPY
NANCY E. RISTER, County Clerk
Williamson County
Page 2 of 13

III.

On the 24th day of September, 2025, said Special Commissioners did convene, and the following named parties appeared in person, or by their attorneys: Plaintiff, City of Georgetown, Texas, represented by Kristina W. Silcocks. Defendants appeared as follows:

Biglari Real Estate Corporation: Did not appear

Chick-Fil-A, Inc. : Did not appear

SPG Wolf Ranch, L.P.: Did not appear

WPG Wolf Ranch, LLC: Did not appear

The Special Commissioners proceeded to hear evidence on the compensation owed to Defendants for the property condemned and damages to the remainder, if any, by reason of the condemnation of the property. After hearing and considering such evidence, the Special Commissioners did find and determine and accordingly assess total compensation to be paid by the City of Georgetown, Texas, to Defendants for this condemnation according to the Section 21.042 of the Texas Property Code, in the total amount of: THIRTY ONE THOUSAND NINETY EIGHT + 00/100 ($ 31,098.00/100), to be paid jointly to Defendants: Biglari Real Estate Corporation, Chick-Fil-A, Inc., SPG Wolf Ranch, L.P., and WPG Wolf Ranch, LLC.

RENDERED this the 24th day of September, 2025.

SPECIAL COMMISSIONERS

LELAND ENOCHS

TOM GREEN

TED W. HEJL

CERTIFIED TO BE A TRUE AND CORRECT COPY
NANCY E. RISTER, County Clerk
Williamson County
Page 3 of 13

The following costs have accrued to date as fees for the Special Commissioner:

$ 350.00	to	Leland Enochs	4 hours
$ 350.00	to	Tom Green	4 hours
$ 350.00	to	Ted W. Hejl	4 hours

The Clerk of this Court is hereby ORDERED to notify all parties or their attorneys of record, as listed in Exhibit "B" attached hereto, of the filing date of this Award by certified mail, return receipt requested, at their addresses of record pursuant to SECTION 21.049, TEXAS PROPERTY CODE.

The foregoing Award of Special Commissioners was filed with me on this the ___ day of _____, 2025.

9/25/2025 10:49:03 AM

Judge, County Court at Law No. 2, Williamson County, Texas

Filed: September 25, 2025 11:32:49 AM
Nancy E. Rister, County Clerk
Williamson County, Texas
By: Phillips, Kelly
Deputy Clerk

CERTIFIED TO BE A TRUE AND CORRECT COPY
NANCY E. RISTER, County Clerk
Williamson County
Page 4 of 13

EXHIBIT "B"

PARTIES TO BE NOTIFIED OF THE FILING OF THE AWARD BY CERTIFIED MAIL, RETURN RECEIPT REQUESTED:

Kristina W. Silcocks
Phelps Dunbar LLP
3600 N. Capitol of Texas Highway, Suite B300
Austin, Texas 78746
Counsel for Plaintiff City of Georgetown, Texas

Biglari Real Estate Corporation
Corporation Service Company, Registered Agent
211 E. 7th Street, Suite 620
Austin, TX 78701

Justin Hodge
Marrs Ellis & Hodge LLP
9811 Katy Freeway, Suite 900
Houston, Texas 77024
Counsel for Chick-Fil-A, Inc.

SPG Wolf Ranch, L.P.
CT Corporation System, Registered Agent
1999 Bryan Street, Suite 900
Dallas, TX 75201-3136

WPG Wolf Ranch, LLC
CT Corporation System, Registered Agent
1999 Bryan Street, Suite 900
Dallas, TX 75201-3136

CERTIFIED TO BE A TRUE AND
CORRECT COPY
NANCY E. RISTER, County Clerk
Williamson County
Page 5 of 13

EXHIBIT "A"

County: Williamson
Highway: S.H. 29
Limits: From 0.161 Miles West of Wolf Ranch Parkway To I.H. 35
CCSJ: 0337-01-053
Parcel No.: 5

PROPERTY DESCRIPTION FOR PARCEL 5

DESCRIPTION OF A 0.0299 ACRE (1,302 SQ. FT.) PARCEL OF LAND LOCATED IN THE C. STUBBLEFIELD SURVEY, ABSTRACT NO. 558, WILLIAMSON COUNTY, TEXAS, BEING A PORTION OF LOT 4C, FINAL PLAT OF WOLF RANCH SUBDIVISION, A RESUBDIVISION OF BLOCK "A", LOT 4-C, AS RECORDED IN CABINET BB, SLIDES 108-109, PLAT RECORDS OF WILLIAMSON COUNTY, TEXAS (P.R.W.C.TX.), DESCRIBED IN A DEED TO STEAK N SHAKE OPERATIONS, INC., RECORDED MARCH 29, 2006 IN DOCUMENT NO. 2006024177, OFFICIAL PUBLIC RECORDS OF WILLIAMSON COUNTY, TEXAS (O.P.R.W.C.TX.); SAID 0.0299 ACRE (1,302 SQ. FT.) PARCEL, AS SHOWN ON A PLAT PREPARED BY SAM, LLC, BEING MORE PARTICULARLY DESCRIBED BY METES AND BOUNDS AS FOLLOWS:

COMMENCING at a mag nail with a shiner stamped "Bury & Partners" found 313.47 feet right of State Highway (S.H.) 29 Engineer's Centerline Station (E.C.S.) 167+35.16 on the north line of Lot 3, Block "A", Wolf Ranch Subdivision, as recorded in Cabinet Y, Slides 112-115, P.R.W.C.TX., described in a deed to Target Corporation, recorded in Document No. 2003124159, O.P.R.W.C.TX., for the southeast corner of Lot 4-D, Block "A", Final Plat of Wolf Ranch Subdivision, a Resubdivision of Block "A", Lot 4D of the Resubdivision of Block "A", Lot 4-C, as recorded in Cabinet GG, Slides 51-52, P.R.W.C.TX, described in a deed to Stephen Paul Elston and Carol Renee Elston, as Trustees of the Elston Family Trust, recorded in Document No. 2010060072, O.P.R.W.C.TX., and the southwest corner of said Lot 4C;

THENCE, North 02°13'01" West, with the east line of said Lot 4-D and the west line of said Lot 4C, a distance of **238.47 feet** to a 5/8-inch iron rod with a 2-inch aluminum cap stamped "Texas Department of Transportation (TXDOT)" set (Surface Coordinates: N=10,204,810.23, E=3,125,662.69) 75.00 feet right of S.H. 29 E.C.S. 167+35.71 on the proposed south right-of-way line of S.H. 29, for the southwest corner and **POINT OF BEGINNING** of the parcel described herein;

1) **THENCE, North 02°13'01" West,** departing the proposed south right-of-way line of said S.H. 29, continuing with the common line of said Lot 4-D and said Lot 4C, a distance of **6.00 feet** to a calculated point on the existing south right-of-way line of S.H. 29, a variable width right-of-way, as dedicated in said plat recorded in Cabinet Y, Slides 112-115, P.R.W.C.TX., and as depicted in TXDOT R.O.W. Strip Map CSJ No. 0337-01-023, for the northeast corner of said Lot 4D, same being the northwest corner of said Lot 4C and of the parcel described herein;

2) **THENCE, North 87°39'07" East,** departing the common line of said Lot 4-D and said Lot 4C, with the existing south right-of-way line of said S.H. 29, a distance of **216.96 feet** to a calculated point, for the northwest corner of Lot 4-B, Final Plat of Wolf Ranch Subdivision, a Resubdivision of Block A, Lot 4B, as recorded in Cabinet AA, Slides 50-51, P.R.W.C.TX., described in a deed to CHICK-FIL-A, INC., recorded in Document No. 2005024287, O.P.R.W.C.TX., same being the northeast corner of said Lot 4C and of the parcel described herein;

3) **THENCE, South 02°13'01" East,** departing the existing south right-of-way line of said S.H. 29, with the east line of said Lot 4C and the west line of said Lot 4-B, a distance of **6.00 feet** to a 5/8-inch iron rod with a 2-inch aluminum cap stamped TXDOT set 75.00 feet right of S.H. 29 E.C.S. 169+52.67 on the proposed south right-of-way line of said S.H. 29, for the southeast corner of the parcel described herein;

THIS SPACE INTENTIONALLY LEFT BLANK

CERTIFIED TO BE A TRUE AND CORRECT COPY
NANCY E. RISTER, County Clerk
Williamson County
Page 6 of 13

FN 49636

SAM Job No. 52245F

EXHIBIT "A"

County: Williamson
Highway: S.H. 29
Limits: From 0.161 Miles West of Wolf Ranch Parkway To I.H. 35
CCSJ: 0337-01-053
Parcel No.: 5

4) **THENCE, South 87°39'07" West**, departing the common line of said Lot 4C and said Lot 4-B, with the proposed south right-of-way line of said S.H. 29, over and across said Lot 4C, a distance of **216.96 feet** to the **POINT OF BEGINNING**, and containing 0.0299 acres (1,302 sq. ft.) of land.

Bearing Basis:
All bearings shown are based on NAD83/2011 Texas Coordinate System, Central Zone (4203). All distances shown are surface and may be converted to grid by dividing by a Surface Adjustment Factor of 1.00011. All coordinates shown are in surface and may be converted by dividing by the same factor. Project units are in U.S. Survey Feet.

THE STATE OF TEXAS §
§ KNOW ALL MEN BY THESE PRESENTS:
COUNTY OF TRAVIS §

That I, Scott C. Brashear, a Registered Professional Land Surveyor, do hereby certify that the above description is true and correct to the best of my knowledge and belief and that the property described herein was determined by a survey made on the ground under my direction and supervision.

WITNESS MY HAND AND SEAL at Austin, Travis County, Texas, on the date shown below.

STATE OF TEXAS
REGISTERED
SCOTT C. BRASHEAR
6660
PROFESSIONAL
LAND SURVEYOR

Scott C. Brashear 4/5/2024
Scott C. Brashear Date
Registered Professional Land Surveyor
No. 6660 – State of Texas

SURVEYING AND MAPPING, LLC
4801 Southwest Pkwy
Building Two, Suite 100
Austin, Texas 78735
TX. Firm No. 10064300

FN 49636

CERTIFIED TO BE A TRUE AND
CORRECT COPY
NANCY E. RISTER, County Clerk
Williamson County
Page 7 of 13

SAM Job No. 52245F

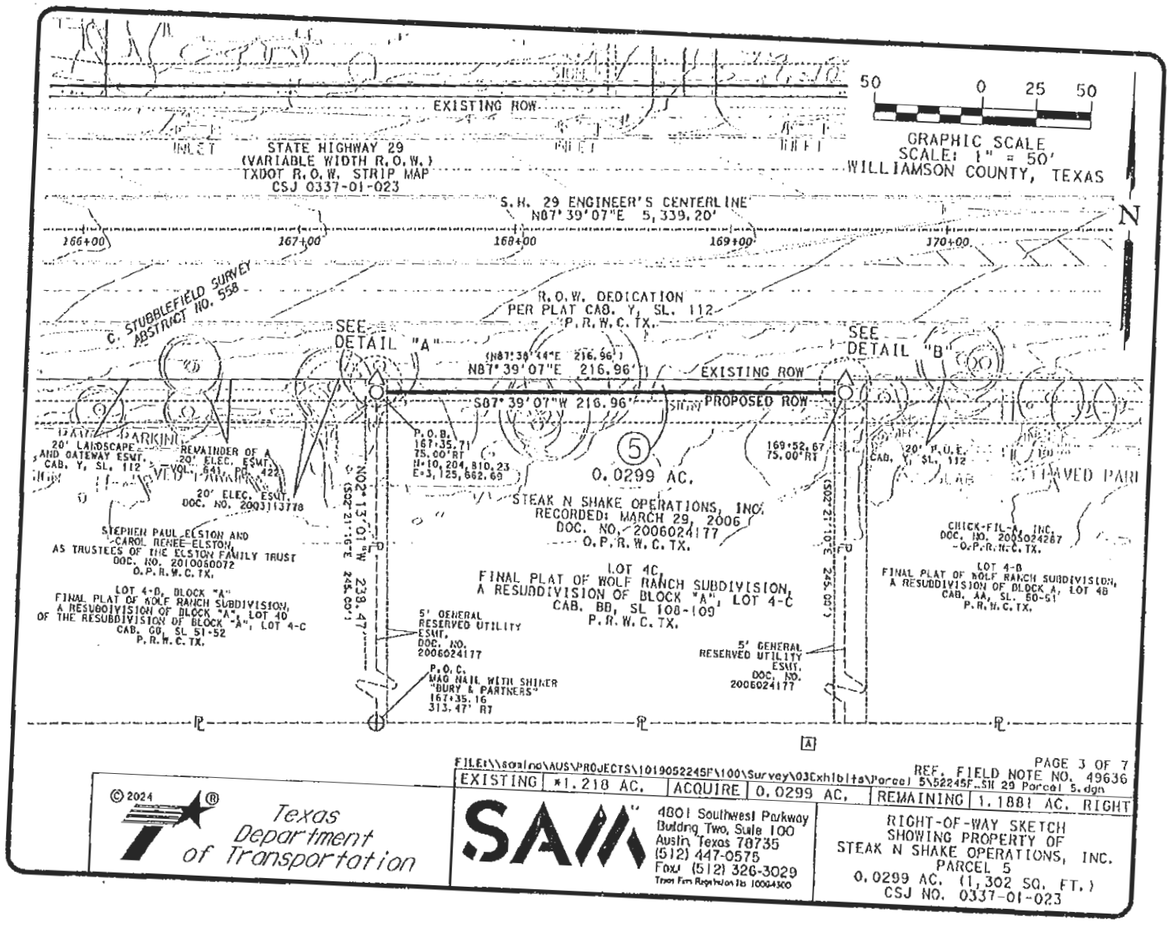

FILE:\\saalng\AUS\PROJECTS\1019052245F\100\Survey\03Exhibits\Parcel 5\52245F_SH 29 Parcel 5.dgn

PAGE 3 OF 7
REF. FIELD NOTE NO. 49636

EXISTING	±1.218 AC.	ACQUIRE	0.0299 AC.	REMAINING	1.1881 AC. RIGHT

© 2024

Texas Department of Transportation

SAM

4801 Southwest Parkway
Building Two, Suite 100
Austin, Texas 78735
(512) 447-0575
Fax: (512) 326-3029
Texas Firm Registration No. 10064300

RIGHT-OF-WAY SKETCH
SHOWING PROPERTY OF
STEAK N SHAKE OPERATIONS, INC.
PARCEL 5
0.0299 AC. (1,302 SQ. FT.)
CSJ NO. 0337-01-023

CERTIFIED TO BE A TRUE AND CORRECT COPY
NANCY E. RISTER, County Clerk
Williamson County
Page 8 of 13

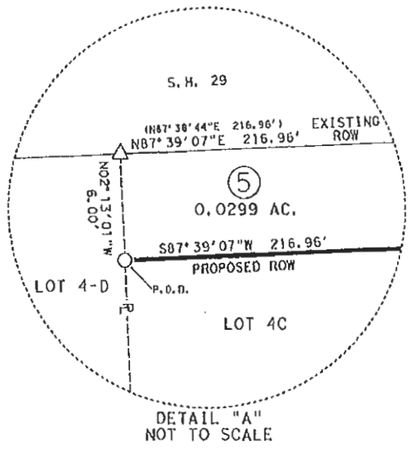

DETAIL "A"
NOT TO SCALE

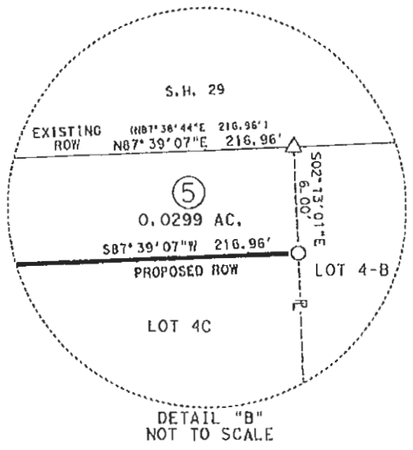

DETAIL "B"
NOT TO SCALE

REF. FIELD NOTE NO. 49636
FILE:\\sonlno\AUS\PROJECTS\1019052245F\100\Survey\03Exhibits\Parcel 5\52245F_SH 29 Parcel 5.dgn

EXISTING	±1.218 AC.	ACQUIRE	0.0299 AC.	REMAINING	1.1881 AC. RIGHT

© 2024
Texas Department of Transportation

SAM
4801 Southwest Parkway
Building Two, Suite 100
Austin, Texas 78735
(512) 447-0575
Fax: (512) 326-3029
Texas Firm Registration No. 10064500

RIGHT-OF-WAY SKETCH
SHOWING PROPERTY OF
STEAK N SHAKE OPERATIONS, INC.
PARCEL 5
0.0299 AC. (1,302 SQ. FT.)
CSJ NO. 0337-01-023

CERTIFIED TO BE A TRUE AND
CORRECT COPY
NANCY E. RISTER, County Clerk
Williamson County
Page 9 of 13

SCHEDULE B1

THIS SURVEY HEREON WAS PREPARED IN CONJUNCTION WITH THAT COMMITMENT FOR TITLE INSURANCE GF NO. 24-779363-GT, ISSUED BY FIRST NATIONAL TITLE INSURANCE COMPANY, EFFECTIVE DATE JANUARY 19, 2024, AND ISSUED DATE JANUARY 26, 2024.

10. THE FOLLOWING MATTERS AND ALL TERMS OF THE DOCUMENTS CREATING OR OFFERING EVIDENCE OF THE MATTERS (WE MUST INSERT MATTERS OR DELETE THIS EXCEPTION.):

A. ALL LEASES, GRANTS, EXCEPTIONS OR RESERVATIONS OF COAL, LIGNITE, OIL, GAS AND OTHER MINERALS, TOGETHER WITH ALL RIGHTS, PRIVILEGES AND IMMUNITIES RELATING THERETO, APPEARING IN THE PUBLIC RECORDS WHETHER LISTED IN SCHEDULE B OR NOT. THERE MAY BE LEASES, GRANTS, EXCEPTIONS OR RESERVATIONS OF MINERAL INTEREST THAT ARE NOT LISTED.

B. ALL LEASES, GRANTS, EXCEPTIONS OR RESERVATIONS OF THE GEOTHERMAL ENERGY AND ASSOCIATED RESOURCES BELOW THE SURFACE OF THE LAND, TOGETHER WITH ALL RIGHTS, PRIVILEGES, AND IMMUNITIES RELATING THERETO, APPEARING IN THE PUBLIC RECORDS WHETHER LISTED IN SCHEDULE B OR NOT. THERE MAY BE LEASES, GRANTS, EXCEPTIONS OR RESERVATIONS OF THE GEOTHERMAL ENERGY AND ASSOCIATED RESOURCES BELOW THE SURFACE OF THE LAND THAT ARE NOT LISTED.

C. ALL VISIBLE AND APPARENT EASEMENTS OR USES AND ALL UNDERGROUND EASEMENTS OR USES, THE EXISTENCE OF WHICH MAY ARISE BY UNRECORDED GRANT OR BY USE.

D. RIGHTS OF PARTIES IN POSSESSION.

E. RIGHTS OF TENANTS, AS TENANTS ONLY, UNDER UNRECORDED LEASES OR RENTAL AGREEMENTS.

F. RIGHTS OF THE PUBLIC, THE STATE OF TEXAS AND THE MUNICIPALITY IN AND TO THAT PORTION OF SUBJECT PROPERTY, IF ANY, LYING WITHIN THE BOUNDARIES OF ANY ROADWAY, PUBLIC OR PRIVATE.

G. ANY AND ALL MATTERS WHICH WOULD BE SHOWN ON A CURRENT, CORRECT SURVEY OF THE PROPERTY.

H. EASEMENT(S) AND/OR BUILDING LINE(S) AFFECTING THE SUBJECT PROPERTY AS SHOWN ON MAP OR PLAT RECORDED IN CABINET BB, SLIDE 108, MAP OR PLAT RECORDS, WILLIAMSON COUNTY, TEXAS. (AFFECTS PLAT AS SHOWN)

I. EASEMENT GRANTED TO TEXAS POWER AND LIGHT COMPANY PURPOSE FILED NOVEMBER 12, 1963, RECORDED IN VOLUME 467, PAGE 400, DEED RECORDS, WILLIAMSON COUNTY, TEXAS. (MAY AFFECT. NOT ABLE TO PLOT)

J. EASEMENT GRANTED TO THE CITY OF GEORGETOWN FILED APRIL 26, 1976, RECORDED IN VOLUME 641, PAGE 422, DEED RECORDS, WILLIAMSON COUNTY, TEXAS. (AFFECTS PLAT AS SHOWN)

K. EASEMENT GRANTED TO TEXAS POWER AND LIGHT COMPANY PURPOSE FILED JUNE 7, 1980, RECORDED IN VOLUME 801, PAGE 303, DEED RECORDS, WILLIAMSON COUNTY, TEXAS. (MAY AFFECT. NOT ABLE TO PLOT)

L. EASEMENT GRANTED TO TRAVIS CARTER AND WIFE, JO BETH CARTER FILED APRIL 19, 1984, RECORDED IN VOLUME 1003, PAGE 150, REAL PROPERTY RECORDS, WILLIAMSON COUNTY, TEXAS. (DOES NOT AFFECT)

M. EASEMENT GRANTED TO THE CITY OF GEORGETOWN FILED APRIL 6, 1995, RECORDED IN VOLUME 2716, PAGE 107, REAL PROPERTY RECORDS, WILLIAMSON COUNTY, TEXAS. (DOES NOT AFFECT)

N. EASEMENT GRANTED TO THE CITY OF GEORGETOWN FILED DECEMBER 17, 2009, RECORDED IN CLERK'S FILE NO. 2009091670, REAL PROPERTY RECORDS, WILLIAMSON COUNTY, TEXAS. (DOES NOT AFFECT)

O. 5' UTILITY EASEMENT ALONG THE EAST PROPERTY LINE AS RESERVED IN SPECIAL WARRANTY DEED FILED MARCH 29, 2006, RECORDED IN CLERK'S FILE NO. 2006024177, REAL PROPERTY RECORDS, WILLIAMSON COUNTY, TEXAS. (AFFECTS PROPERTY AS SHOWN)

P. AGREEMENT AND CONTRACT DATED APRIL 23, 1984 EXECUTED BY JAY L. KOLF, BETTIE M WOLF, TRAVIS CARTER AND JO BETH CARTER RECORDED IN VOLUME 1004, PAGE 13, REAL PROPERTY RECORDS, WILLIAMSON COUNTY, TEXAS REFERENCE IS HEREBY MADE TO SAID DOCUMENT FOR FULL PARTICULARS. (DOES NOT AFFECT)

Q. MATTERS CONTAINED IN THAT CERTAIN LAND LEASE AGREEMENT DATED JULY 11, 1991 EXECUTED BY JAY L. KOLF, LESSOR AND PEARCE OUTDOOR DISPLAY, INC. LESSEE RECORDED IN VOLUME 2035, PAGE 852 AND VOLUME 2042, PAGE 739, REAL PROPERTY RECORDS, WILLIAMSON COUNTY, TEXAS, AND LAND LEASE AGREEMENTS RENEWED BY UNRECORDED LAND LEASE AGREEMENTS DATED JULY 1, 1996, BY AND BETWEEN JAY KOLF ESTATE, LESSOR AND PEARCE OUTDOOR DISPLAY, LESSEE, AND AMENDED NOVEMBER 21, 1998, AND ASSIGNED TO ADVANTAGE OUTDOOR COMPANY, LLC. REFERENCE IS HEREBY MADE TO SAID DOCUMENT FOR FULL PARTICULARS. (DOES NOT AFFECT)

R. MATTERS CONTAINED IN THAT CERTAIN DEVELOPMENT AGREEMENT DATED SEPTEMBER 11, 2003 EXECUTED BY CITY OF GEORGETOWN AND FORESTVILLE ASSOCIATES RECORDED IN CLERK'S FILE NO. 2003089648, REAL PROPERTY RECORDS, WILLIAMSON COUNTY, TEXAS REFERENCE IS HEREBY MADE TO SAID DOCUMENT FOR FULL PARTICULARS. (DOES NOT AFFECT)

S. MATTERS CONTAINED IN THAT CERTAIN MEMORANDUM OF DEVELOPER ACQUISITION RIGHTS AGREEMENT DATED DECEMBER 31, 2003 EXECUTED BY TARGET CORPORATION AND SPG KOLF RANCH, L.P. FILED DECEMBER 31, 2003 RECORDED IN CLERK'S FILE NO. 2003124161, REAL PROPERTY RECORDS, WILLIAMSON COUNTY, TEXAS REFERENCE IS HEREBY MADE TO SAID DOCUMENT FOR FULL PARTICULARS. (DOES NOT AFFECT)

T. MATTERS CONTAINED IN THAT CERTAIN DEED RECORDATION AFFIDAVIT EDWARDS AQUIFER PROTECTION PLAN DATED FEBRUARY 20, 2004 EXECUTED BY SPG KOLF RANCH, L.P. FILED FEBRUARY 23, 2004 RECORDED IN CLERK'S FILE NO. 2004013553, REAL PROPERTY RECORDS, WILLIAMSON COUNTY, TEXAS REFERENCE IS HEREBY MADE TO SAID DOCUMENT FOR FULL PARTICULARS. (MAY AFFECT)

U. MATTERS CONTAINED IN THAT CERTAIN MEMORANDUM OF SUPPLEMENTAL AGREEMENT DATED SEPTEMBER 20, 2004 EXECUTED BY SPG KOLF RANCH, L.P., AND KOHL'S TEXAS, L.P. FILED SEPTEMBER 20, 2004 RECORDED IN CLERK'S FILE NO. 2004073657, REAL PROPERTY RECORDS, WILLIAMSON COUNTY, TEXAS REFERENCE IS HEREBY MADE TO SAID DOCUMENT FOR FULL PARTICULARS. (DOES NOT AFFECT)

V. MATTERS CONTAINED IN THAT CERTAIN SIGN EASEMENT AGREEMENT DATED SEPTEMBER 20, 2004 EXECUTED BY SPG KOLF RANCH, L.P. AND KOHL'S TEXAS, L.P. FILED SEPTEMBER 20, 2004 RECORDED IN CLERK'S FILE NO. 2004073689, REAL PROPERTY RECORDS, WILLIAMSON COUNTY, TEXAS REFERENCE IS HEREBY MADE TO SAID DOCUMENT FOR FULL PARTICULARS. (MAY AFFECT. NOT ABLE TO PLOT)

W. MATTERS CONTAINED IN THAT CERTAIN FIRST AMENDMENT TO THE DEVELOPMENT AGREEMENT WITH FORESTVILLE ASSOCIATES, A MARYLAND GENERAL PARTNERSHIP REGARDING DEVELOPMENT OF KOLF RANCH DATED APRIL 25, 2006 EXECUTED BY CITY OF GEORGETOWN, A TEXAS HOME RULE MUNICIPAL CORPORATION ("CITY") AND SPG KOLF RANCH, L.P., A TEXAS LIMITED AND FORESTVILLE ASSOCIATES FILED JUNE 21, 2006 RECORDED IN CLERK'S FILE NO. 2006051008, REAL PROPERTY RECORDS, WILLIAMSON COUNTY, TEXAS REFERENCE IS HEREBY MADE TO SAID DOCUMENT FOR FULL PARTICULARS. (DOES NOT AFFECT)

X. MATTERS CONTAINED IN THAT CERTAIN ACCESS EASEMENT DATED DECEMBER 10, 2009 EXECUTED BY STEAK N SHAKE OPERATIONS, INC. AND SPG KOLF RANCH, L.P. FILED DECEMBER 17, 2009 RECORDED IN CLERK'S FILE NO. 2009091677, REAL PROPERTY RECORDS, WILLIAMSON COUNTY, TEXAS, AFFECTED BY THAT CERTAIN ASSIGNMENT OF OPERATING AGREEMENT, RECORDED IN CLERK'S FILE NO. 2014079108, REAL PROPERTY RECORDS, WILLIAMSON COUNTY, TEXAS. REFERENCE IS HEREBY MADE TO SAID DOCUMENT FOR FULL PARTICULARS. (MAY AFFECT. NOT ABLE TO PLOT)

Y. AN UNRECORDED LEASE WITH CERTAIN TERMS, COVENANTS, CONDITIONS AND PROVISIONS SET FORTH THEREIN AS DISCLOSED BY MEMORANDUM OF SHOPPING CENTER LEASE LESSOR: SPG KOLF RANCH, LP LESSEE: MICHAELS STORES, INC. FILED NOVEMBER 19, 2004 RECORDED IN CLERK'S FILE NO. 2004090198, REAL PROPERTY RECORDS, WILLIAMSON COUNTY, TEXAS. (MAY AFFECT. NOT ABLE TO PLOT)

REF. FIELD NOTE NO. 49636

FILE:\\somino\AUS\PROJECTS\1019052245F\100\Survey\03Exhibits\Parcel 5\52245F_SH 29 Parcel 5.dgn

EXISTING	±1.218 AC.	ACQUIRE	0.0299 AC.	REMAINING	1.1881 AC.	RIGHT

© 2024

Texas Department of Transportation

SAM™
4801 Southwest Parkway
Building Two, Suite 100
Austin, Texas 78735
(512) 447-0575
Fax: (512) 326-3029
Texas Firm Registration No. 10064300

RIGHT-OF-WAY SKETCH
SHOWING PROPERTY OF
STEAK N SHAKE OPERATIONS, INC.
PARCEL 5
0.0299 AC. (1,302 SQ. FT.)
CSJ NO. 0337-01-023

CERTIFIED TO BE A TRUE AND CORRECT COPY
NANCY E. RISTER, County Clerk
Williamson County
Page 10 of 13

Z. AN UNRECORDED LEASE WITH CERTAIN TERMS, COVENANTS, CONDITIONS AND PROVISIONS SET FORTH THEREIN AS DISCLOSED BY MEMORANDUM OF LEASE LESSOR: SPO WOLF RANCH, L.P. LESSEE: OFFICE DEPOT OF TEXAS, L.P. FILED JANUARY 27, 2005 RECORDED IN CLERK'S FILE NO. 2005006547, REAL PROPERTY RECORDS, WILLIAMSON COUNTY, TEXAS (DOES NOT AFFECT)

AA. AN UNRECORDED LEASE WITH CERTAIN TERMS, COVENANTS, CONDITIONS AND PROVISIONS SET FORTH THEREIN AS DISCLOSED BY MEMORANDUM OF LEASE LESSOR: SPF WOLF RANCH, LP LESSEE: PIER 1 IMPORTS (U.S.), INC. FILED MAY 5, 2005 RECORDED IN CLERK'S FILE NO.2005033509, REAL PROPERTY RECORDS, WILLIAMSON COUNTY, TEXAS. (DOES NOT AFFECT)

BB. AN UNRECORDED LEASE WITH CERTAIN TERMS, COVENANTS, CONDITIONS AND PROVISIONS SET FORTH THEREIN AS DISCLOSED BY MEMORANDUM OF LEASE LESSOR: SPO WOLF RANCH, L.P. LESSEE: PETSMART, INC. FILED DECEMBER 27, 2005 RECORDED IN CLERK'S FILE NO. 2005101775, REAL PROPERTY RECORDS, WILLIAMSON COUNTY, TEXAS. (MAY AFFECT, NOT ABLE TO PLOT)

CC. AN UNRECORDED LEASE WITH CERTAIN TERMS, COVENANTS, CONDITIONS AND PROVISIONS SET FORTH THEREIN AS DISCLOSED BY MEMORANDUM OF LEASE AGREEMENT LESSOR: SPO WOLF RANCH, L.P. LESSEE: BEST BUY STORES, L.P. FILED FEBRUARY 2, 2006 RECORDED IN CLERK'S FILE NO. 2006008194, REAL PROPERTY RECORDS, WILLIAMSON COUNTY, TEXAS. (MAY AFFECT. NOT ABLE TO PLOT)

DD. AN UNRECORDED LEASE WITH CERTAIN TERMS, COVENANTS, CONDITIONS AND PROVISIONS SET FORTH THEREIN AS DISCLOSED BY MEMORANDUM OF LEASE LESSOR: SPO WOLF RANCH, L.P. LESSEE: MARMAXX OPERATING CORP FILED NOVEMBER 27, 2006 RECORDED IN CLERK'S FILE NO. 2006102728, REAL PROPERTY RECORDS, MILLLIAMSON COUNTY, TEXAS. (DOES NOT AFFECT)

EE. EASEMENTS AND/OR EASEMENT RIGHTS, BUILDING SETBACK LINES, COVENANTS, CONDITIONS, RESTRICTIONS, AS SET FORTH BY INSTRUMENT RECORDED IN CLERK'S FILE NO(S). 2003124160, 2006024176, 2023055333, 2023055334, REAL PROPERTY RECORDS OF WILLIAMSON COUNTY, TEXAS, TOGETHER WITH ALL AMENDMENTS. (MAY AFFECT, NOT ABLE TO PLOT)

FF. TERMS, CONDITIONS AND STIPULATIONS AS SET OUT IN THAT CERTAIN ACCESS EASEMENT AGREEMENT FILED OCTOBER 17, 2003, BY AND BETWEEN DETTIE WOLF, INDIVIDUALLY, AND AS CO-INDEPENDENT EXECUTOR OF THE ESTATE OF JAY L. WOLF, JANE WOLF ROBERTSON, IVA WOLF MCLAUGHLAN, JUDY WOLF HINDELANG, INDIVIDUALLY AND AS CO-INDEPENDENT EXECUTOR OF THE ESTATE OF JAY L. WOLF, JAY LEON WOLF, JR. AND DAVID WOLF, INDIVIDUALLY AND AS CO-INDEPENDENT EXECUTOR OF THE ESTATE OF JAY L. WOLF AND SPO WOLF RANCH, L.P., RECORDED IN CLERK'S FILE NO. 2003101405, REAL PROPERTY RECORDS, WILLIAMSON COUNTY, TEXAS. (MAY AFFECT, NOT ABLE TO PLOT)

GG. TERMS, CONDITIONS AND STIPULATIONS AS SET OUT IN THAT CERTAIN ACCESS EASEMENT AS SET OUT IN OPERATION AND EASEMENT AGREEMENT FILED DECEMBER 31, 2003, BY AND BETWEEN TARGET CORPORATION AND SPO WOLF RANCH, L.P., RECORDED IN CLERK'S FILE NO. 2003124160, REAL PROPERTY RECORDS, WILLIAMSON COUNTY, TEXAS, AMENDED BY INSTRUMENTS RECORDED IN CLERK'S FILE NO. 2007096288, 2011087599, 2023055333, REAL PROPERTY RECORDS, WILLIAMSON COUNTY, TEXAS. (MAY AFFECT. NOT ABLE TO PLOT)

HH. PROPERTY SUBJECT TO THE CONDITIONS, STIPULATIONS AND TERMS AS SET OUT IN THE SHORT FORM LEASE THAT WAS DATED FEBRUARY 14, 2022, EXECUTED BY AND BETWEEN STEAK N SHAKE INC., AN INDIANA CORPORATION F/K/A STEAK N SHAKE OPERATIONS, INC., AN INDIANA CORPORATION ("LANDLORD"), AND CHICK-FIL-A, INC., A GEORGIA CORPORATION ("TENANT"), AND FILED OF RECORD ON MARCH 2, 2022 UNDER CLERK'S FILE NO. 2022027151, REAL PROPERTY RECORDS OF WILLIAMSON COUNTY, TEXAS. AMENDED BY INSTRUMENT RECORDED IN CLERK'S FILE NO. 2023055332, REAL PROPERTY RECORDS, WILLIAMSON COUNTY, TEXAS. (DOES NOT AFFECT)

REF. FIELD NOTE NO. 49636

FILE:\\samino\AUS\PROJECTS\1019052245F\100\Survey\03Exhibits\Parcel 5\52245F_SH 29 Parcel 5.dgn

EXISTING	±1.218 AC.	ACQUIRE	0.0299 AC.	REMAINING	1.1881 AC. RIGHT

© 2024

Texas Department of Transportation

SAM
4801 Southwest Parkway
Building Two, Suite 100
Austin, Texas 78735
(512) 447-0575
Fax: (512) 326-3029
Texas Firm Registration No. 10064300

RIGHT-OF-WAY SKETCH
SHOWING PROPERTY OF
STEAK N SHAKE OPERATIONS, INC.
PARCEL 5
0.0299 AC. (1,302 SQ. FT.)
CSJ NO. 0337-01-023

CERTIFIED TO BE A TRUE AND
CORRECT COPY
NANCY E. RISTER, County Clerk
Williamson County
Page 11 of 13

LEGEND

■	TYPE I CONCRETE MONUMENT FOUND
⊡	TYPE II BRONZE DISK IN CONCRETE FOUND
⊡	TYPE II BRONZE DISK IN CONCRETE SET
○	5/8" IRON ROD SET WITH TXDOT ALUMINUM CAP
●	5/8" IRON ROD FOUND (AS NOTED)
⊕	NAIL FOUND (AS NOTED)
⬡	FENCE POST (TYPE NOTED)
△	CALCULATED POINT
℄	PROPERTY LINE
( )	RECORD INFORMATION
P.O.B.	POINT OF BEGINNING
P.O.C.	POINT OF COMMENCING
P.O.R.	POINT OF REFERENCE
N.T.S.	NOT TO SCALE
P.R.W.C.TX.	PLAT RECORDS OF WILLIAMSON COUNTY, TEXAS
O.P.R.W.C.TX.	OFFICIAL PUBLIC RECORDS OF WILLIAMSON COUNTY, TEXAS
---/---/---	DISTANCE NOT TO SCALE
---/---/---	DEED LINE (COMMON OWNERSHIP)
----------	PROPERTY LINE
————	EXISTING RIGHT-OF-WAY
————	PARCEL LIMITS
-·-·-·-·-	PROPOSED DRAINAGE EASEMENT
----------	EXISTING EASEMENT LINE

N

A

TARGET CORPORATION
DOC. NO. 2003124159
O.P.R.W.C.TX.

LOT 3, BLOCK "A"
WOLF RANCH SUBDIVISION
CAB. Y, SL 112-115
P.R.W.C.TX.

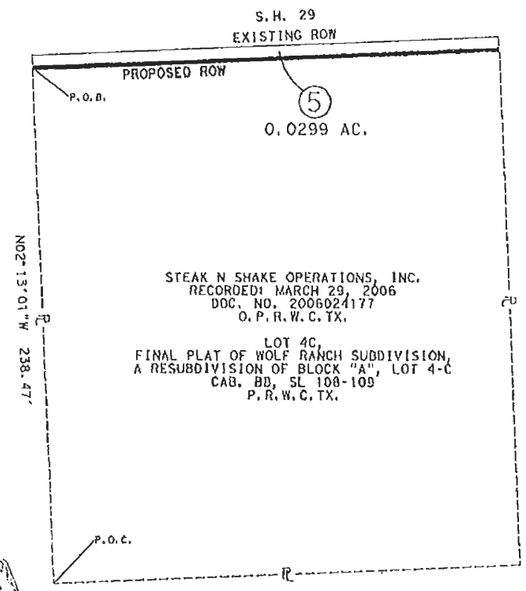

PARENT TRACT INSET
N.T.S.

NOTES:

1. ALL PROJECT COORDINATES AND BEARINGS ARE GRID NORTH BASED ON THE TEXAS COORDINATE SYSTEM, CENTRAL ZONE (4203), NAD 83 (2011), EPOCH 2010.0. ALL SURFACE COORDINATES SHOWN HEREON MAY BE CONVERTED TO GRID BY DIVIDING BY A SURFACE ADJUSTMENT FACTOR OF 1.00011. UNITS: U.S. SURVEY FEET. SURVEY DATE: AUGUST, 2023
2. THIS SURVEY WAS COMPLETED WITHOUT THE BENEFIT OF TITLE REPORT. THERE MAY BE EASEMENTS OR OTHER MATTERS, RECORDED OR UNRECORDED, THAT ARE NOT SHOWN.
3. A PROPERTY DESCRIPTION OF EVEN DATE WAS PREPARED IN CONJUNCTION WITH THIS PARCEL PLAT.

* AREA CALCULATED BY SAM, LLC.

** UNABLE TO BE SET AT THE TIME OF SURVEY.

I HEREBY CERTIFY THAT THIS SURVEY WAS MADE ON THE GROUND UNDER MY DIRECTION AND SUPERVISION AND THAT THIS PLAT IS TRUE AND CORRECT TO THE BEST OF MY KNOWLEDGE AND BELIEF.

STATE OF TEXAS
REGISTERED
SCOTT C. BRASHEAR
6660
PROFESSIONAL
LAND SURVEYOR

Scott C. Brashear
SCOTT C. BRASHEAR
REGISTERED PROFESSIONAL LAND SURVEYOR
NO. 6660, STATE OF TEXAS

4/5/2024
DATE

PAGE 7 OF 7
REF. FIELD NOTE NO. 49636
FILE:\\samino\AUS\PROJECTS\1019052245F\100\Survey\03Exhibits\Parcel 5\52245F_SH 29 Parcel 5.dgn

EXISTING	*1.218 AC.	ACQUIRE	0.0299 AC.	REMAINING	1.1881 AC. RIGHT

© 2024 Texas Department of Transportation

SAM
4801 Southwest Parkway
Building Two, Suite 100
Austin, Texas 78735
(512) 447-0575
Fax: (512) 326-3029
Texas Firm Registration No. 10064300

RIGHT-OF-WAY SKETCH
SHOWING PROPERTY OF
STEAK N SHAKE OPERATIONS, INC.
PARCEL 5
0.0299 AC. (1,302 SQ. FT.)
CSJ NO. 0337-01-023

CERTIFIED TO BE A TRUE AND CORRECT COPY
NANCY E. RISTER, County Clerk
Williamson County
COUNTY COURT WILLIAMSON COUNTY, TEXAS

Automated Certificate of eService

This automated certificate of service was created by the efiling system. The filer served this document via email generated by the efiling system on the date and to the persons listed below. The rules governing certificates of service have not changed. Filers must still provide a certificate of service that complies with all applicable rules.

Envelope ID: 106047717
Filing Code Description: No Fee Documents
Filing Description: Award of Special Commissioners Biglari P5
Status as of 9/25/2025 7:51 AM CST

Associated Case Party: Chick-Fil-A, Inc

Name	BarNumber	Email	TimestampSubmitted	Status
Justin Hodge	24036791	Jhodge@mehlaw.com	9/24/2025 5:22:12 PM	SENT
Kyle Baum	24082664	kbaum@mehlaw.com	9/24/2025 5:22:12 PM	SENT
Sumer Shelton	24037485	sshelton@mehlaw.com	9/24/2025 5:22:12 PM	SENT

Associated Case Party: The City of Georgetown, Texas

Name	BarNumber	Email	TimestampSubmitted	Status
Kristina Silcocks	795930	kristina.silcocks@phelps.com	9/24/2025 5:22:12 PM	SENT
Vanessa Joaquin		vanessa.joaquin@phelps.com	9/24/2025 5:22:12 PM	SENT

STATE OF TEXAS
COUNTY OF WILLIAMSON
I, NANCY E. RISTER, COUNTY CLERK, DO HEREBY CERTIFY THAT THIS IS A TRUE AND CORRECT COPY AS SAME APPEARS OF RECORD IN MY CUSTODY.
Witness my hand and seal of office on 9/25/2025
NANCY E. RISTER, COUNTY CLERK
WILLIAMSON COUNTY, TEXAS
By _____ Deputy

CERTIFIED TO BE A TRUE AND CORRECT COPY
NANCY E. RISTER, County Clerk
Williamson County

PROJECT: SH29
PARCEL: 6

CAUSE NO. 25-0440-CC4

THE CITY OF GEORGETOWN, TEXAS Plaintiff, vs. CHICK-FIL-A, INC., ET AL. Defendants.	CONDEMNATION PROCEEDING FILED IN THE COUNTY COURT AT LAW NO. 4 WILLIAMSON COUNTY, TEXAS

AWARD OF SPECIAL COMMISSIONERS

On the 25th day of September, 2025, in Williamson County, Texas, the above-styled proceeding came on to be heard before the undersigned Special Commissioners, three disinterested freeholders in Williamson County, Texas, appointed as Special Commissioners by the Judge of County Court at Law No. 4, Williamson County, Texas to assess the compensation and damages, if any, caused by these proceedings, and came Plaintiff, City of Georgetown, Texas, a municipal corporation, located in Williamson County, Texas, represented by Kristina W. Silcocks of Phelps Dunbar LLP, and the Defendants, Chick-Fil-A, Inc., SPG Wolf Ranch, L.P., and WPG Wolf Ranch, LLC. The Special Commissioners made the following findings:

I.

That on the 19th day of March, 2025, Plaintiff filed an Original Petition for Condemnation in the County Court at Law No. 4 of Williamson County Texas; wherein, upon the facts and for the purposes therein stated, Plaintiff, through the duly elected City Council for the City of Georgetown, Texas, duly incorporated, organized and existing under and by virtue of its charter adopted by the electorate pursuant to Article XI, Section 5 of the Texas Constitution, is vested with the power and authority to appropriate private property for public use and purposes by condemnation proceedings and to exercise all the powers of eminent domain under Section 251.001 of the Texas Local Government Code, has

CERTIFIED TO BE A TRUE AND CORRECT COPY
NANCY E. RISTER, County Clerk
Williamson County
Page 1 of 11

determined that it is necessary to acquire fee simple interests in said Property, and Plaintiff seeks to acquire and condemn the Property and interests described below, with such Property vesting in the City of Georgetown, Texas, to wit:

Parcel 6:
A 0.0322 ACRE (1,404 SQ. FT.) PARCEL OF LAND LOCATED IN THE C. STUBBLEFIELD SURVEY, ABSTRACT NO. 558, WILLIAMSON COUNTY, TEXAS, BEING A PORTION OF LOT 4B, RESUBDIVISION OF WOLF RANCH, BLOCK A, LOT 4, AS RECORDED IN CABINET AA, SLIDE 50, PLAT RECORDS OF WILLIAMSON COUNTY, TEXAS, DESCRIBED IN A DEED TO CHICK-FIL-A, INC., RECORDED APRIL 4, 2005 IN DOCUMENT NO. 2005024287, OFFICIAL PUBLIC RECORDS OF WILLIAMSON COUNTY, TEXAS; SAID 0.0322 ACRE (1,404 SQUARE FOOT) TRACT OF LAND BEING MORE PARTICULARLY DESCRIBED BY METES AND BOUNDS IN EXHIBIT "A" ATTACHED HERETO AND MADE A PART HEREOF FOR ALL PURPOSES (HEREINAFTER THE "PROPERTY").

II.

That upon consideration of the Petition for Condemnation filed by Plaintiff, the Judge of County Court at Law No. 4, Williamson County, Texas, did on March 20, 2025, appoint Ben Daniel, Merlin Lester, and Tom Pilgrim, three disinterested real property owners who reside in Williamson County, Texas, as Special Commissioners to assess compensation and damages, if any, caused by the taking of said property. The Special Commissioners did on August 28, 2025, sign the Order Setting Hearing Before Special Commissioners, setting the Hearing for the 25th day of September, 2025 at 1:00 p.m. at the Georgetown Public Library, Room 211, 402 W. 8th Street, Georgetown, Texas 78626. Thereafter, each Special Commissioner took the oath prescribed by law, which oaths are on file with the papers in this cause.

CERTIFIED TO BE A TRUE AND CORRECT COPY
NANCY E. RISTER, County Clerk
Williamson County
Page 2 of 11

III.

On the 25th day of September, 2025, said Special Commissioners did convene, and the following named parties appeared in person, or by their attorneys: Plaintiff, City of Georgetown, Texas, represented by Kristina W. Silcocks. Defendants appeared as follows:

Chick-Fil-A, Inc.: Did appear through Counsel

SPG Wolf Ranch, L.P.: Did not appear

WPG Wolf Ranch, LLC: Did not appear

The Special Commissioners proceeded to hear evidence on the compensation owed to Defendants for the property condemned and damages to the remainder, if any, by reason of the condemnation of the property. After hearing and considering such evidence, the Special Commissioners did find and determine and accordingly assess total compensation to be paid by the City of Georgetown, Texas, to Defendants for this condemnation according to the Section 21.042 of the Texas Property Code, in the total amount of: Sixty Five Thousand Eight Hundred Ten Dollars even. ($ 65810.00), to be paid jointly to Defendants: Chick-Fil-A, Inc., SPG Wolf Ranch, L.P., and WPG Wolf Ranch, LLC.

RENDERED this the 25th day of September, 2025.

SPECIAL COMMISSIONERS

BEN DANIEL

MERLIN LESTER

TOM PILGRIM

CERTIFIED TO BE A TRUE AND CORRECT COPY
NANCY E. RISTER, County Clerk
Williamson County
Page 3 of 11

The following costs have accrued to date as fees for the Special Commissioner:

$_____	to	Ben Daniel	4 hours
$_____	to	Merlin Lester	4 hours
$_____	to	Tom Pilgrim	4 hours

The Clerk of this Court is hereby ORDERED to notify all parties or their attorneys of record, as listed in Exhibit "B" attached hereto, of the filing date of this Award by certified mail, return receipt requested, at their addresses of record pursuant to SECTION 21.049, TEXAS PROPERTY CODE.

The foregoing Award of Special Commissioners was filed with me on this the ___ day of _____, 2025.

9/29/2025 12:44:38 PM

Filed: September 29, 2025 2:03:43 PM
Nancy E. Rister, County Clerk
Williamson County, Texas
By: Phillips, Kelly
Deputy Clerk

Judge, County Court at Law No. 4, Williamson County, Texas

CERTIFIED TO BE A TRUE AND CORRECT COPY
NANCY E. RISTER, County Clerk
Williamson County
Page 4 of 11

EXHIBIT "B"

PARTIES TO BE NOTIFIED OF THE FILING OF THE AWARD BY CERTIFIED MAIL, RETURN RECEIPT REQUESTED:

Kristina W. Silcocks
Phelps Dunbar LLP
3600 N. Capitol of Texas Highway, Suite B300
Austin, Texas 78746
Counsel for Plaintiff City of Georgetown, Texas

Justin Hodge
Marrs Ellis & Hodge LLP
9811 Katy Freeway, Suite 900
Houston, Texas 77024
Counsel for Chick-Fil-A, Inc.

SPG Wolf Ranch, L.P.
CT Corporation System, Registered Agent
1999 Bryan Street, Suite 900
Dallas, TX 75201-3136

WPG Wolf Ranch, LLC
CT Corporation System, Registered Agent
1999 Bryan Street, Suite 900
Dallas, TX 75201-3136

CERTIFIED TO BE A TRUE AND
CORRECT COPY
NANCY E. RISTER, County Clerk
Williamson County
Page 5 of 11

EXHIBIT "A"

County: Williamson
Highway: S.H. 29
Limits: From 0.161 Miles West of Wolf Ranch Parkway To I.H. 35
CCSJ: 0337-01-053
Parcel No.: 6

PROPERTY DESCRIPTION FOR PARCEL 6

DESCRIPTION OF A 0.0322 ACRE (1,404 SQ. FT.) PARCEL OF LAND LOCATED IN THE C. STUBBLEFIELD SURVEY, ABSTRACT NO. 558, WILLIAMSON COUNTY, TEXAS, BEING A PORTION OF LOT 4B, RESUBDIVISION OF WOLF RANCH, BLOCK A, LOT 4, AS RECORDED IN CABINET AA, SLIDE 50, PLAT RECORDS OF WILLIAMSON COUNTY, TEXAS (P.R.W.C.TX.), DESCRIBED IN A DEED CHICK-FIL-A, INC., RECORDED APRIL 4, 2005 IN DOCUMENT NO. 2005024287, OFFICIAL PUBLIC RECORDS OF WILLIAMSON COUNTY, TEXAS (O.P.R.W.C.TX.); SAID 0.0322 ACRE (1,404 SQ. FT.) PARCEL, AS SHOWN ON A PLAT PREPARED BY SAM, LLC, BEING MORE PARTICULARLY DESCRIBED BY METES AND BOUNDS AS FOLLOWS:

COMMENCING at a mag nail with a shiner stamped "Bury & Partners" found 313.47 feet right of State Highway (S.H.) 29 Engineer's Centerline Station (E.C.S.) 167+35.16 on the north line of Lot 3, Block A, Wolf Ranch Subdivision, recorded in Cabinet Y, Slide 112, P.R.W.C.TX., described in a deed to Target Corporation, recorded in Document No. 2003124159, O.P.R.W.C.TX., for the southeast corner of Lot 4-D, Block A, Final Plat of Wolf Ranch Subdivision, Resubdivision of Block A, Lot 4D of the Resubdivision of Block A, Lot 4-C, recorded in Cabinet GG, Slide 51, P.R.W.C.TX, as described in a deed to Stephen Paul Elston and Carol Renee Elston, as Trustees of the Elston Family Trust, recorded in Document No. 2010060072, O.P.R.W.C.TX., same being the southwest corner of Lot 4C, Final Plat of Wolf Ranch Subdivision, Resubdivision of Block A, Lot 4C, recorded in Cabinet BB, Slide 108, P.R.W.C.TX., described in a deed to Steak N Shake Operations, Inc., recorded in Document No. 2006024177, O.P.R.W.C.TX.;

THENCE North 87°38'57" East, with the north line of said Lot 3 and the south line of said Lot 4C, a distance of **216.96 feet** to a calculated point, for the southeast corner of said Lot 4C, and the southwest corner of said Lot 4B;

THENCE North 02°13'01" West, departing the north line of said Lot 3, with the east line of said Lot 4C and the west line of said Lot 4B, a distance of **238.46 feet** to a 5/8-inch iron rod with a 2-inch aluminum cap stamped "Texas Department of Transportation (TXDOT)" set (Surface Coordinates: N=10,204,819.12, E=3,125,879.46) 75.00 feet right of S.H. 29 E.C.S. 169+52.67, on the proposed south right-of-way line of S.H. 29, for the southwest corner and **POINT OF BEGINNING** of the parcel described herein;

1) **THENCE, North 02°13'01" West**, departing the proposed south right-of-way line of S.H. 29, continuing with the common line of said Lot 4C and said Lot 4B, a distance of **6.00 feet** to a calculated point on the existing south right-of-way line of S.H. 29, a variable width right-of-way, as described to the State of Texas in Document No. 2006006974, O.P.R.W.C.TX., and depicted in TXDOT R.O.W. Strip Map CSJ No. 0337-01-023, for the northeast corner of said Lot 4C, the northwest corner of said Lot 4B and the northwest corner of the parcel described herein;

2) **THENCE, North 87°39'07" East**, departing the common line of said Lot 4C and said Lot 4B, with the existing south right-of-way line of said S.H. 29, a distance of **206.00 feet** to a calculated point for the northwest corner of Lot 4-A, Resubdivision of Wolf Ranch, Lot 4, Block A, recorded in Cabinet Z, Slide 341, P.R.W.C.TX., described in a deed to JP Morgan Chase Bank, and recorded in Document No. 2005028766, O.P.R.W.C.TX., and the northwest corner of said Lot 4B and the parcel described herein, from which a 5/8-inch iron rod with a plastic cap found bears North 38°07'38" West, a distance of 0.86 feet;

3) **THENCE, South 02°13'01" East**, departing the existing south right-of-way line of S.H. 29, with the west line of said Lot 4-A and the east line of said Lot 4B, a distance of **11.18 feet** to a 5/8-inch iron rod with a 2-inch aluminum cap stamped TXDOT set 80.18 feet right of S.H. 29 E.C.S. 171+58.65 on the proposed south right-of-way line of S.H. 29, for the southeast corner of the parcel described herein;

CERTIFIED TO BE A TRUE AND
CORRECT COPY
NANCY E. RISTER, County Clerk
Williamson County
Page 6 of 11

THENCE, departing the common line of said Lot 4-A and said Lot 4B, with the south proposed right-of-way line of S.H. 29, over and across said Lot 4B, the following two (2) courses and distances numbered 4-5:

4) **North 87°46'32" West**, a distance of **65.02 feet** to a TXDOT Type II bronze disk set in concrete 75.00 feet right of S.H. 29 E.C.S. 170+93.85, and

5) **South 87°39'07" West**, a distance of **141.18 feet** to the **POINT OF BEGINNING**, and containing 0.0322 acres (1,404 sq. ft.) of land.

Bearing Basis:
All bearings shown are based on NAD83/2011 Texas Coordinate System, Central Zone (4204). All distances shown are surface and may be converted to grid by dividing by a Surface Adjustment Factor of 1.00011. All coordinates shown are in surface and may be converted by dividing by the same factor. Project units are in U.S. Survey Feet.

THE STATE OF TEXAS §
§ KNOW ALL MEN BY THESE PRESENTS:
COUNTY OF TRAVIS §

That I, Scott C. Brashear, a Registered Professional Land Surveyor, do hereby certify that the above description is true and correct to the best of my knowledge and belief and that the property described herein was determined by a survey made on the ground under my direction and supervision.

WITNESS MY HAND AND SEAL at Austin, Travis County, Texas, on the date shown below.

STATE OF TEXAS
REGISTERED
SCOTT C BRASHEAR
6660
PROFESSIONAL
LAND SURVEYOR

SURVEYING AND MAPPING, LLC
4801 Southwest Pkwy
Building Two, Suite 100
Austin, Texas 78735
TX. Firm No. 10064300

Scott C. Brashear 4/5/2024
Scott C. Brashear Date
Registered Professional Land Surveyor
No. 6660 – State of Texas

FN 49628

CERTIFIED TO BE A TRUE AND CORRECT COPY
NANCY E. RISTER, County Clerk
Williamson County
Page 7 of 11

SAM Job No. 52245F

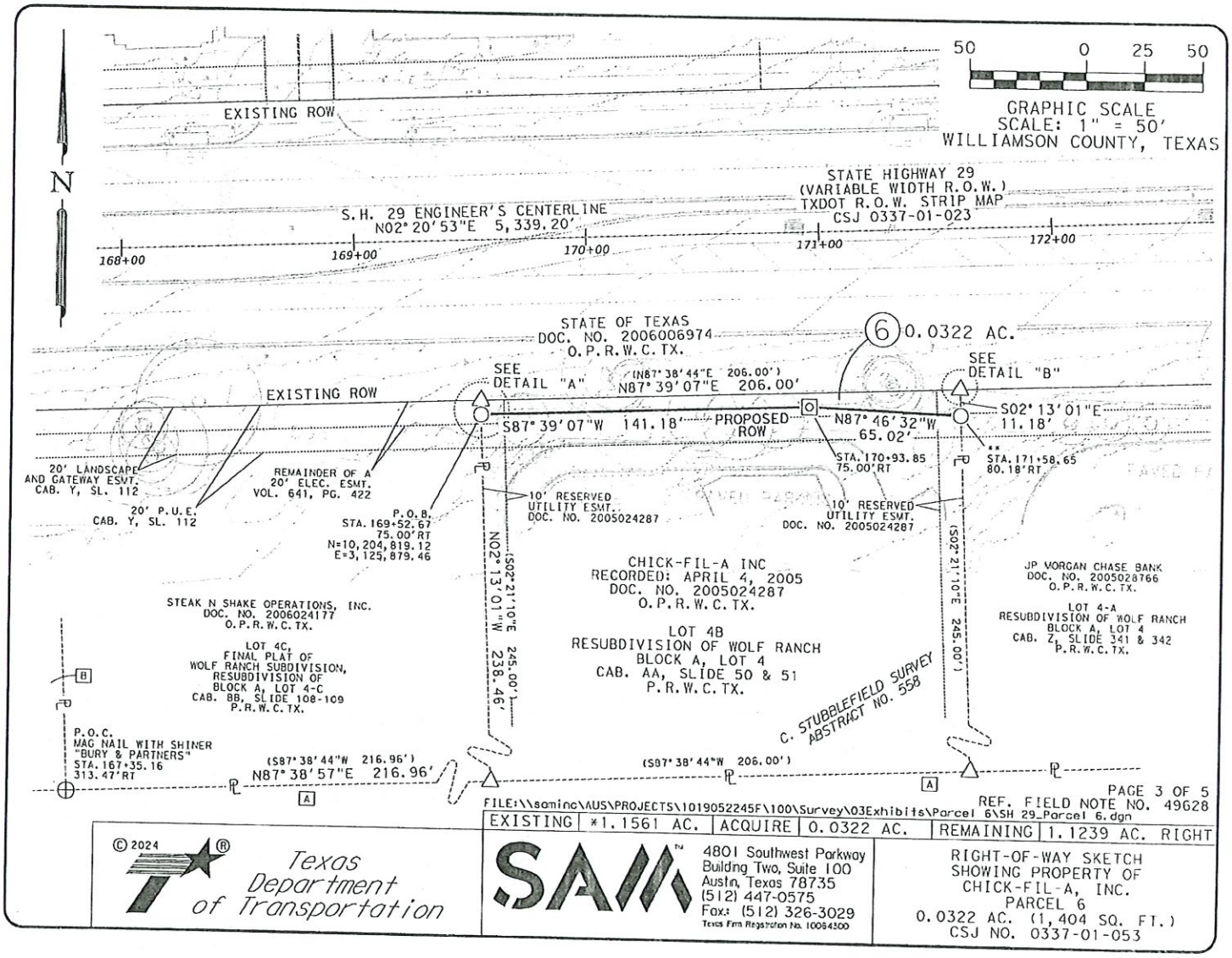

PAGE 3 OF 5
REF. FIELD NOTE NO. 49628

FILE:\\saminc\AUS\PROJECTS\1019052245F\100\Survey\03Exhibits\Parcel 6\SH 29_Parcel 6.dgn

EXISTING	*1.1561 AC.	ACQUIRE	0.0322 AC.	REMAINING	1.1239 AC. RIGHT

© 2024

Texas Department of Transportation

SAM™
4801 Southwest Parkway
Building Two, Suite 100
Austin, Texas 78735
(512) 447-0575
Fax: (512) 326-3029
Texas Firm Registration No. 10064300

RIGHT-OF-WAY SKETCH
SHOWING PROPERTY OF
CHICK-FIL-A, INC.
PARCEL 6
0.0322 AC. (1,404 SQ. FT.)
CSJ NO. 0337-01-053

CERTIFIED TO BE A TRUE AND CORRECT COPY
NANCY E. RISTER, County Clerk
Williamson County
Page 8 of 11

SCHEDULE B:

THIS SURVEY HEREON WAS PREPARED IN CONJUCTION WITH THAT COMMITMENT FOR TITLE INSURANCE GF NO. 24-779543-GT, ISSUED BY FIRST NATIONAL TITLE INSURANCE COMPANY, EFFECTIVE DATE JANUARY 18, 2024, AND ISSUED DATE JANUARY 25, 2024.

10. THE FOLLOWING MATTERS AND ALL TERMS OF THE DOCUMENTS CREATING OR OFFERING EVIDENCE OF THE MATTERS (WE MUST INSERT MATTERS OR DELETE THIS EXCEPTION.):

A. ALL LEASES, GRANTS, EXCEPTIONS OR RESERVATIONS OF COAL, LIGNITE, OIL, GAS AND OTHER MINERALS, TOGETHER WITH ALL RIGHTS, PRIVILEGES AND IMMUNITIES RELATING THERETO, APPEARING IN THE PUBLIC RECORDS WHETHER LISTED IN SCHEDULE B OR NOT. THERE MAY BE LEASES, GRANTS, EXCEPTIONS OR RESERVATIONS OF MINERAL INTEREST THAT ARE NOT LISTED.

B. ALL LEASES, GRANTS, EXCEPTIONS OR RESERVATIONS OF THE GEOTHERMAL ENERGY AND ASSOCIATED RESOURCES BELOW THE SURFACE OF THE LAND, TOGETHER WITH ALL RIGHTS, PRIVILEGES, AND IMMUNITIES RELATING THERETO, APPEARING IN THE PUBLIC RECORDS WHETHER LISTED IN SCHEDULE B OR NOT. THERE MAY BE LEASES, GRANTS, EXCEPTIONS OR RESERVATIONS OF THE GEOTHERMAL ENERGY AND ASSOCIATED RESOURCES BELOW THE SURFACE OF THE LAND THAT ARE NOT LISTED.

C. ALL VISIBLE AND APPARENT EASEMENTS OR USES AND ALL UNDERGROUND EASEMENTS OR USES, THE EXISTENCE OF WHICH MAY ARISE BY UNRECORDED GRANT OR BY USE.

D. RIGHTS OF PARTIES IN POSSESSION.

E. RIGHTS OF TENANTS, AS TENANTS ONLY, UNDER UNRECORDED LEASES OR RENTAL AGREEMENTS.

F. THE FOLLOWING EASEMENT(S) AND/OR BUILDING LINE(S) AFFECTING THE SUBJECT PROPERTY AS SHOWN ON MAP OR PLAT RECORDED IN CABINET AA, SLIDE 50, MAP OR PLAT RECORDS, WILLIAMSON COUNTY, TEXAS:

A 20 FOOT PUBLIC UTILITY EASEMENT ALONG THE NORTH PROPERTY LINE. (AFFECTS PARCEL AS SHOWN)

A 20 FOOT GATEWAY/LANDSCAPE EASEMENT ALONG THE NORTH PROPERTY LINE. (AFFECTS PARCEL AS SHOWN)

G. ACCESS MAINTENANCE CHARGE SET OUT IN INSTRUVENT RECORDED IN DOCUMENT NO. 2005024288, REAL PROPERTY RECORDS, WILLIAMSON COUNTY, TEXAS. (MAY AFFECT PARCEL)

H. A 20 FOOT RIGHT OF WAY AND EASEMENT GRANTED TO THE CITY OF GEORGETOWN, RECORDED IN VOLUME 641, PAGE 422, DEED RECORDS, WILLIAMSON COUNTY, TEXAS. (AFFECTS PARCEL AS SHOWN)

I. DEVELOPMENT AGREEMENT REGARDING DEVELOPMENT OF WOLF RANCH ENTERED INTO SEPTEMBER 11, 2003, BY AND BETWEEN CITY OF GEORGETOWN AND FORESTVILLE ASSOCIATES RECORDED UNDER DOCUMENT NO. 2003089648 AND RE-RECORDED UNDER DOCUMENT NO. 2003119077, OFFICIAL PUBLIC RECORDS, WILLIAMSON COUNTY, TEXAS. AMENDED BY INSTRUVENT RECORDED IN DOCUMENT NO. 2006051008, REAL PROPERTY RECORDS, WILLIAMSON COUNTY, TEXAS. (MAY AFFECT PARCEL)

J. ACCESS EASEMENT AGREEMENT ENTERED INTO OCTOBER 16, 2003, BY AND BETWEEN BETTIE WOLF, INDIVIDUALLY, AND AS CO-INDEPENDENT EXECUTOR OF ESTATE OF JAY L. WOLF, JANE WOLF ROBERTSON, IVA WOLF MCLACHLAN, JUDY WOLF HINDELANG, INDIVIDUALLY, AND AS CO-INDEPENDENT EXECUTOR OF THE ESTATE OF JAY L. WOLF, JAY LEON WOLF, JR. AND DAVID WOLF, INDIVIDUALLY, AND AS CO-INDEPENDENT EXECUTOR OF THE ESTATE OF JAY L. WOLF AND SPG WOLF RANCH, L.P., RECORDED UNDER DOCUMENT NO. 2003101405, OFFICIAL PUBLIC RECORDS, WILLIAMSON COUNTY, TEXAS. (MAY AFFECT PARCEL)

K. OPERATION AND EASEMENT AGREEMENT DATED DECEMBER 31, 2003, BY AND BETWEEN TARGET CORPORATION AND SPG WOLF RANCH, L.P., RECORDED UNDER DOCUMENT NO. 2003124160, OFFICIAL PUBLIC RECORDS, WILLIAMSON COUNTY, TEXAS, AND SUPPLEMENTAL AGREEMENT DATED SEPTEMBER 20, 2004 BY AND BETWEEN SPG WOLF RANCH, L.P. AND KOHL'S TEXAS, L.P., AS SET OUT IN MEMORANDUM OF SUPPLEMENTAL AGREEMENT RECORDED UNDER DOCUMENT NO. 2004073657, OFFICIAL PUBLIC RECORDS, WILLIAMSON COUNTY, TEXAS. (MAY AFFECT PARCEL)

L. TERMS AND CONDITIONS OF THAT CERTAIN COVENANTS, CONDITIONS AND RESTRICTIONS AGREEMENT RECORDED IN DOCUMENT NO. 2005024288, REAL PROPERTY RECORDS, WILLIAMSON COUNTY, TEXAS. AS AFFECTED BY ASSIGNMENT OF OPERATING AGREEMENT RECORDED IN DOCUMENT NO. 2014079108, REAL PROPERTY RECORDS, WILLIAMSON COUNTY, TEXAS. (MAY AFFECT PARCEL)

M. ELECTRIC EASEMENT DATED NOVEMBER 20, 2003, EXECUTED BY SPG WOLF RANCH, L.P. TO CITY OF GEORGETOWN, RECORDED UNDER DOCUMENT NO. 2003113778, OFFICIAL PUBLIC RECORDS, WILLIAMSON COUNTY, TEXAS. (DOES NOT AFFECT PARCEL)

N. EDWARDS AQUIFER PROTECTION PLAN APPROVAL ATTACHED TO AFFIDAVIT FILED FEBRUARY 23, 2004, RECORDED UNDER DOCUMENT NO. 2004013553, OFFICIAL PUBLIC RECORDS, WILLIAMSON COUNTY, TEXAS. (MAY AFFECT PARCEL)

O. ACCESS EASEMENT AND UTILITY EASEMENT RESERVED IN INSTRUMENT RECORDED IN DOCUMENT NO. 2005024287, REAL PROPERTY RECORDS, WILLIAMSON COUNTY, TEXAS. (AFFECTS PARCEL AS SHOWN)

P. GRANT OF RIGHT OF FIRST OFFER RESERVED BY DEVELOPER SPG WOLF RANCH, LP, IN INSTRUMENT RECORDED IN DOCUMENT NO. 2005024288, REAL PROPERTY RECOREDS, WILLIAMSON COUNTY, TEXAS. (MAY AFFECT PARCEL)

REF. FIELD NOTE NO. 49628

FILE:\\samino\AUS\PROJECTS\1019052245F\100\Survey\03Exhibits\Parcel 6\SH 29_Parcel 6.dgn

EXISTING	*1.1561 AC.	ACQUIRE	0.0322 AC.	REMAINING	1.1239 AC.	RIGHT

© 2024

Texas Department of Transportation

SAM™
4801 Southwest Parkway
Building Two, Suite 100
Austin, Texas 78735
(512) 447-0575
Fax: (512) 326-3029
Texas Frm Registration No. 10064300

RIGHT-OF-WAY SKETCH
SHOWING PROPERTY OF
CHICK-FIL-A, INC.
PARCEL 6
0.0322 AC. (1,404 SQ. FT.)
CSJ NO. 0337-01-053

CERTIFIED TO BE A TRUE AND CORRECT COPY
NANCY E. RISTER, County Clerk
Williamson County
Page 9 of 11

LEGEND

■	TYPE I CONCRETE MONUMENT FOUND
◎	TYPE II BRONZE DISK IN CONCRETE FOUND
⊙	TYPE II BRONZE DISK IN CONCRETE SET
○	5/8" IRON ROD SET WITH TXDOT ALUMINUM CAP
●	5/8" IRON ROD FOUND (AS NOTED)
⊕	NAIL FOUND (AS NOTED)
⬡	FENCE POST (TYPE NOTED)
△	CALCULATED POINT
℄	PROPERTY LINE
( )	RECORD INFORMATION
P.O.B.	POINT OF BEGINNING
P.O.C.	POINT OF COMMENCING
P.O.R.	POINT OF REFERENCE
N.T.S.	NOT TO SCALE
P.R.W.C.TX.	PLAT RECORDS OF WILLIAMSON COUNTY, TEXAS
O.P.R.W.C.TX.	OFFICIAL PUBLIC RECORDS OF WILLIAMSON COUNTY, TEXAS
-----	DISTANCE NOT TO SCALE
---/---/---	DEED LINE (COMMON OWNERSHIP)
.....	PROPERTY LINE
———	EXISTING RIGHT-OF-WAY
———	PARCEL LIMITS
.....	PROPOSED DRAINAGE EASEMENT
.....	EXISTING EASEMENT LINE

NOTES:

1. ALL PROJECT COORDINATES AND BEARINGS ARE GRID NORTH BASED ON THE TEXAS COORDINATE SYSTEM, CENTRAL ZONE (4203), NAD 83 (2011), EPOCH 2010.0. ALL SURFACE COORDINATES SHOWN HEREON MAY BE CONVERTED TO GRID BY DIVIDING BY A SURFACE ADJUSTMENT FACTOR OF 1.00011. UNITS: U.S. SURVEY FEET. SURVEY DATE: AUGUST, 2023

2. THIS SURVEY WAS COMPLETED WITH THE BENEFIT OF TITLE REPORT, PROVIDED BY FIRST NATIONAL TITLE INSURANCE COMPANY, GF NO. 24-779507-GT, EFFECTIVE DATE JANUARY 18, 2024, AND ISSUED DATE JANUARY 25, 2024. THERE MAY BE EASEMENTS OR OTHER MATTERS, RECORDED OR UNRECORDED, THAT ARE NOT SHOWN.

3. A PROPERTY DESCRIPTION OF EVEN DATE WAS PREPARED IN CONJUNCTION WITH THIS PARCEL PLAT.

* AREA CALCULATED BY SAM, LLC.

** UNABLE TO SET AT THE TIME OF SURVEY

I HEREBY CERTIFY THAT THIS SURVEY WAS MADE ON THE GROUND UNDER MY DIRECTION AND SUPERVISION AND THAT THIS PLAT IS TRUE AND CORRECT TO THE BEST OF MY KNOWLEDGE AND BELIEF.

Scott C. Brashear

SCOTT C. BRASHEAR
REGISTERED PROFESSIONAL LAND SURVEYOR
NO. 6660, STATE OF TEXAS

4/5/2024
DATE

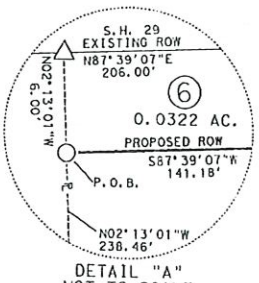

DETAIL "A"
NOT TO SCALE



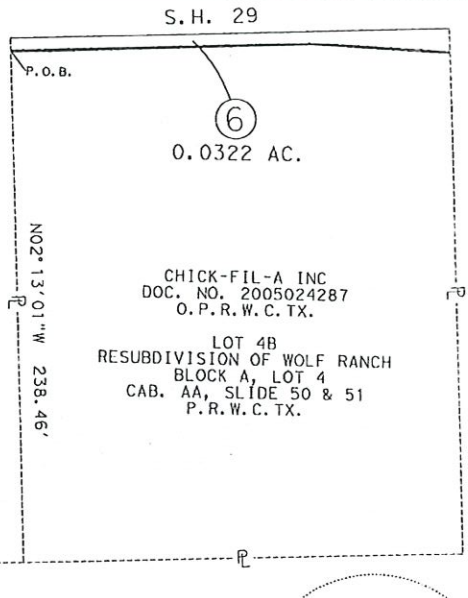

[A]
TARGET CORPORATION
DOC. NO. 2003124159
O.P.R.W.C.TX.

LOT 3, BLOCK A
WOLF RANCH SUBDIVISION
CAB. Y, SLIDE 112-115
P.R.W.C.TX.

[B]
STEPHEN PAUL ELSTON &
CAROL RENEE ELSTON,
AS TRUSTEES OF
ELSTON FAMILY TRUST
DOC. NO. 2010060072
O.P.R.W.C.TX.

LOT 4-D, BLOCK A
FINAL PLAT OF WOLF RANCH SUBDIVISION,
RESUBDIVISION OF BLOCK A,
LOT 4D OF THE RESUBDIVISION
OF BLOCK A, LOT 4-C
CAB. GG, SLIDE 51
P.R.W.C.TX.

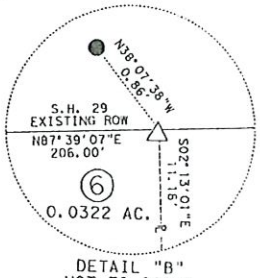

DETAIL "B"
NOT TO SCALE



PAGE 5 OF 5
REF. FIELD NOTE NO. 49628

FILE:\\saminc\AUS\PROJECTS\1019052245F\100\Survey\03Exhibits\Parcel 6\SH 29_Parcel 6.dgn

EXISTING	*1.1561 AC.	ACQUIRE	0.0322 AC.	REMAINING	1.1239 AC. RIGHT

© 2024

Texas Department of Transportation

SAM™
4801 Southwest Parkway
Building Two, Suite 100
Austin, Texas 78735
(512) 447-0575
Fax: (512) 326-3029
Texas Firm Registration No. 10064300

RIGHT-OF-WAY SKETCH
SHOWING PROPERTY OF
CHICK-FIL-A, INC.
PARCEL 6
0.0322 AC. (1,404 SQ. FT.)
CSJ NO. 0337-01-053

CERTIFIED TO BE A TRUE AND CORRECT COPY
NANCY E. RISTER, County Clerk
Williamson County
Page 10 of 11

Automated Certificate of eService

This automated certificate of service was created by the efiling system. The filer served this document via email generated by the efiling system on the date and to the persons listed below. The rules governing certificates of service have not changed. Filers must still provide a certificate of service that complies with all applicable rules.

Envelope ID: 106151356
Filing Code Description: No Fee Documents
Filing Description: Award of Special Commissioners ChickFilA P6
Status as of 9/26/2025 4:41 PM CST

Associated Case Party: Chick-Fil-A, Inc

Name	BarNumber	Email	TimestampSubmitted	Status
Justin Hodge	24036791	Jhodge@mehlaw.com	9/26/2025 4:29:34 PM	SENT
Kyle Baum	24082664	kbaum@mehlaw.com	9/26/2025 4:29:34 PM	SENT
Sumer Shelton	24037485	sshelton@mehlaw.com	9/26/2025 4:29:34 PM	SENT

Case Contacts

Name	BarNumber	Email	TimestampSubmitted	Status
Kristina W.Silcocks		kristina.silcocks@phelps.com	9/26/2025 4:29:34 PM	SENT
Vanessa Joaquin		vanessa.joaquin@phelps.com	9/26/2025 4:29:34 PM	SENT

STATE OF TEXAS
COUNTY OF WILLIAMSON
I, NANCY E. RISTER, COUNTY CLERK, DO HEREBY CERTIFY THAT THIS IS A TRUE AND CORRECT COPY AS SAME APPEARS OF RECORD IN MY CUSTODY.
Witness my hand and seal of office on 9/29/2025
NANCY E. RISTER, COUNTY CLERK
WILLIAMSON COUNTY, TEXAS
By _____ Deputy

CERTIFIED TO BE A TRUE AND CORRECT COPY
NANCY E. RISTER, County Clerk
Williamson County

NOTICE OF AWARD OF SPECIAL COMMISSIONERS

The State of Texas County of Williamson

Kristina W Silcocks
Phelps Dunbar LLP
3600 N Capitol of Texas Highway
Suite B300
Austin TX 78746

Certified Mail # 95890710527009319257 83

Pursuant to Property Code Art. 21.049, attached herein is a certified copy of the Award of Special Commissioners in Cause No.25-0463-CC5; THE CITY OF GEORGETOWN, TEXAS vs. JP MORGAN CHASE BANK, ET AL in the County Court at Law #5 of Williamson County, Texas. The Award was signed by Judge John McMaster and filed on the 9th day of July, 2025.

Issued and given under my hand and the seal of said Court at office in Georgetown, Texas, on this the 9th day of July, 2025.



NANCY E. RISTER, County Clerk
Williamson County, Texas

By: *Kelly Phillips,* Deputy

PROJECT: SH29
PARCEL: 7

CAUSE NO. 25-0463-CC5

THE CITY OF GEORGETOWN, TEXAS Plaintiff, vs. JP MORGAN CHASE BANK, ET AL. Defendants.	CONDEMNATION PROCEEDING FILED IN THE COUNTY COURT AT LAW NO. 5 WILLIAMSON COUNTY, TEXAS

AWARD OF SPECIAL COMMISSIONERS

On the 7th day of July, 2025, in Williamson County, Texas, the above-styled proceeding came on to be heard before the undersigned Special Commissioners, three disinterested freeholders in Williamson County, Texas, appointed as Special Commissioners by the Judge of County Court at Law No. 5, Williamson County, Texas to assess the compensation and damages, if any, caused by these proceedings, and came Plaintiff, City of Georgetown, Texas, a municipal corporation, located in Williamson County, Texas, represented by Kristina W. Silcocks of Phelps Dunbar LLP, and the Defendants, JP Morgan Chase Bank, a National Banking Association, SPG Wolf Ranch, L.P., and WPG Wolf Ranch, LLC. The Special Commissioners made the following findings:

I.

That on the 24th day of March, 2025, Plaintiff filed an Original Petition for Condemnation in the County Court at Law No. 5 of Williamson County Texas; wherein, upon the facts and for the purposes therein stated, Plaintiff, through the duly elected City Council for the City of Georgetown, Texas, duly incorporated, organized and existing under and by virtue of its charter adopted by the electorate pursuant to Article XI, Section 5 of the Texas Constitution, is vested with the power and authority to appropriate private property for public use and purposes by condemnation proceedings and to exercise

CERTIFIED TO BE A TRUE AND
CORRECT COPY
NANCY E. RISTER, County Clerk
Williamson County
Page 1 of 13

all the powers of eminent domain under Section 251.001 of the Texas Local Government Code, has determined that it is necessary to acquire fee simple interests in said Property, and Plaintiff seeks to acquire and condemn the Property and interests described below, with such Property vesting in the City of Georgetown, Texas, to wit:

Parcel 7:
A 0.0587 ACRE (2,555 SQ. FT.) PARCEL OF LAND LOCATED IN THE C. STUBBLEFIELD SURVEY, ABSTRACT NO. 558, WILLIAMSON COUNTY, TEXAS, BEING A PORTION OF LOT 4-A, FINAL PLAT OF WOLF RANCH SUBDIVISION, A RESUBDIVISION OF BLOCK A, LOT 4, AS RECORDED IN CABINET Z, SLIDES 341-342, PLAT RECORDS OF WILLIAMSON COUNTY, TEXAS (P.R.W.C.TX.), DESCRIBED IN A DEED TO JP MORGAN CHASE BANK, RECORDED APRIL 20, 2005 IN DOCUMENT NO. 2005028766, OFFICIAL PUBLIC RECORDS OF WILLIAMSON COUNTY, TEXAS; SAID 0.0587 ACRE (2,555 SQ. FT.) TRACT OF LAND BEING MORE PARTICULARLY DESCRIBED BY METES AND BOUNDS IN EXHIBIT "A" ATTACHED HERETO AND MADE A PART HEREOF FOR ALL PURPOSES (HEREINAFTER REFERRED TO AS THE "PROPERTY".)

II.

That upon consideration of the Petition for Condemnation filed by Plaintiff, the Judge of County Court at Law No. 5, Williamson County, Texas, did on March 24, 2025, appoint Mary Jo Schoppa, Dennis Sedlachek, and Ben Daniel, three disinterested real property owners who reside in Williamson County, Texas, as Special Commissioners to assess compensation and damages, if any, caused by the taking of said property. The Special Commissioners did on June 10, 2025, sign the Order Setting Hearing Before Special Commissioners, setting the Hearing for the 7th day of July, 2025 at 1:00 p.m. at the Georgetown Public Library, Room 211, 402 W. 8th Street, Georgetown, Texas 78626. Thereafter, each Special Commissioner took the oath prescribed by law, which oaths are on file with the papers in this cause.

CERTIFIED TO BE A TRUE AND CORRECT COPY
NANCY E. RISTER, County Clerk
Williamson County
Page 2 of 13

III.

On the 7th day of July, 2025, said Special Commissioners did convene, and the following named parties appeared in person, or by their attorneys: Plaintiff, City of Georgetown, Texas, represented by Kristina W. Silcocks. Defendants appeared as follows:

JP Morgan Chase Bank: Did not appear

SPG Wolf Ranch, L.P.: Did not appear

WPG Wolf Ranch, LLC: Did not appear

The Special Commissioners proceeded to hear evidence on the compensation owed to Defendants for the property condemned and damages to the remainder, if any, by reason of the condemnation of the property. After hearing and considering such evidence, and pursuant to a settlement agreement between the parties, the Special Commissioners did find and determine and accordingly assess total compensation to be paid by the City of Georgetown, Texas, to Defendants for this condemnation according to the Section 21.042 of the Texas Property Code, in the total amount of: Seventy two thousand nine hundred and forty six dollars ($72,946), to be paid jointly to Defendants: JP Morgan Chase Bank, a National Banking Association, SPG Wolf Ranch, L.P., and WPG Wolf Ranch, LLC.

RENDERED this the 7th day of July, 2025.

Mary Jo Schoppa
MARY JO SCHOPPA

DENNIS SEDLACHEK

BEN DANIEL

SPECIAL COMMISSIONERS

CERTIFIED TO BE A TRUE AND CORRECT COPY
NANCY E. RISTER, County Clerk
Williamson County
Page 3 of 13

The following costs have accrued to date as fees for the Special Commissioner:

$ 350.00	to	Mary Jo Schoppa	4 hours
$ 350.00	to	Dennis Sedlachek	4 hours
$ 350.00	to	Ben Daniel	4 hours

The Clerk of this Court is hereby ORDERED to notify all parties or their attorneys of record, as listed in Exhibit "B" attached hereto, of the filing date of this Award by certified mail, return receipt requested, at their addresses of record pursuant to SECTION 21.049, TEXAS PROPERTY CODE.

The foregoing Award of Special Commissioners was filed with me on this the ___ day of 7/9/2025 12:17:32 PM _____, 2025.

Filed: July 9, 2025 1:44:33 PM
Nancy E. Rister, County Clerk
Williamson County, Texas
By: Phillips, Kelly
Deputy Clerk

Judge, County Court at Law No. 5, Williamson County, Texas

CERTIFIED TO BE A TRUE AND CORRECT COPY
NANCY E. RISTER, County Clerk
Williamson County

EXHIBIT "B"

PARTIES TO BE NOTIFIED OF THE FILING OF THE AWARD BY CERTIFIED MAIL, RETURN RECEIPT REQUESTED:

Kristina W. Silcocks
Phelps Dunbar LLP
3600 N. Capitol of Texas Highway, Suite B300
Austin, Texas 78746
Counsel for Plaintiff City of Georgetown, Texas

JP Morgan Chase Bank
CT Corporation System, Registered Agent
1999 Bryan Street, Suite 900
Dallas, TX 75201-3136

SPG Wolf Ranch, L.P.
CT Corporation System, Registered Agent
1999 Bryan Street, Suite 900
Dallas, TX 75201-3136

WPG Wolf Ranch, LLC
CT Corporation System, Registered Agent
1999 Bryan Street, Suite 900
Dallas, TX 75201-3136

CERTIFIED TO BE A TRUE AND
CORRECT COPY
NANCY E. RISTER, County Clerk
Williamson County
Page 5 of 13

EXHIBIT "A"

County: Williamson
Highway: S.H. 29
Limits: From 0.161 Miles West of Wolf Ranch Parkway To I.H. 35
CCSJ: 0337-01-053
Parcel No.: 7

10) **North 87°46'32" West**, a distance of **10.25 feet** to the **POINT OF BEGINNING**, and containing 0.0587 acres (2,555 sq. ft.) of land.

** Unable to set at the time of survey.

Bearing Basis:
All bearings shown are based on NAD83/2011 Texas Coordinate System, Central Zone (4203). All distances shown are surface and may be converted to grid by dividing by a Surface Adjustment Factor of 1.00011. All coordinates shown are in surface and may be converted by dividing by the same factor. Project units are in U.S. Survey Feet.

THE STATE OF TEXAS §
§ KNOW ALL MEN BY THESE PRESENTS:
COUNTY OF TRAVIS §

That I, Scott C. Brashear, a Registered Professional Land Surveyor, do hereby certify that the above description is true and correct to the best of my knowledge and belief and that the property described herein was determined by a survey made on the ground under my direction and supervision.

WITNESS MY HAND AND SEAL at Austin, Travis County, Texas, on the date shown below.



SURVEYING AND MAPPING, LLC
4801 Southwest Pkwy
Building Two, Suite 100
Austin, Texas 78735
TX. Firm No. 10064300

Scott C. Brashear 4/5/2024
Scott C. Brashear Date
Registered Professional Land Surveyor
No. 6660 – State of Texas

CERTIFIED TO BE A TRUE AND
CORRECT COPY
NANCY E. RISTER, County Clerk
Williamson County
Page 6 of 13

FN 49626

SAM Job No. 52245F

4) **South 87°39'07" West**, a distance of **134.88 feet** to a TXDOT Type II bronze disk set in concrete 81.00 feet right of S.H. 29 E.C.S. 171+68.87, and

5) **North 87°46'32" West**, a distance of **10.25 feet** to a 5/8-inch iron rod with a 2-inch aluminum cap stamped TXDOT set ** 80.18 feet right of S.H. 29 E.C.S. 171+58.65, on the west line of said Lot 4-A and the east line of said Lot 4-B, for the southwest corner of the parcel described herein;

1) **THENCE, North 02°13'01" West**, departing the proposed south right-of-way line of said S.H. 29, continuing with the common line of said Lot 4-B and said Lot 4-A, a distance of **11.18 feet** to a calculated point on the existing south right-of-way line of S.H. 29, a variable width right-of-way, as dedicated in said plat recorded in Cabinet Y, Slides 112-115, P.R.W.C.TX., and as depicted in TXDOT R.O.W. Strip Map CSJ No. 0337-01-023, for the northeast corner of said Lot 4-B, same being the northwest corner of said Lot 4-A and of the parcel described herein, from which a 5/8-inch iron rod with an illegible yellow plastic cap found bears, North 38°07'38" West, a distance of 0.86 feet;

THENCE, departing the common line of said Lot 4-B and said Lot 4-A, with the existing south right-of-way line of said S.H. 29, the following three (3) courses and distances numbered 2 - 4:

2) **North 87°39'07" East**, a distance of **160.09 feet** to a calculated point, from which a 5/8-inch iron rod with an illegible yellow plastic cap found bears, North 32°02'50" West, a distance of 0.63 feet, and
3) **South 47°45'05" East**, a distance of **27.52 feet** to a 5/8-inch iron rod with a yellow plastic cap stamped "CFE" found, and

4) **North 87°37'39" East**, a distance of **35.60 feet** to a calculated point, for the most northerly northwest corner of said Lot 3, same being the northeast corner of said Lot 4-A and of the parcel described herein;

5) **THENCE, South 00°38'54" East**, departing the existing south right-of-way line of said S.H. 29, with the common line of said Lot 3 and said Lot 4-A, a distance of **10.00 feet** to a TXDOT Type II bronze disk set in concrete 98.30 feet right of S.H. 29 E.C.S. 173+73.67 on the proposed south right-of-way line of said S.H. 29, for the southeast corner of the parcel described herein;

THENCE, departing the common line of said Lot 3 and said Lot 4-A, with the proposed south right-of-way line of said S.H. 29, over and across said Lot 4-A, the following five (5) courses and distances numbered 6 - 10:

6) **South 87°37'39" West**, a distance of **39.40 feet** to a TXDOT Type II bronze disk set in concrete 98.32 feet right of S.H. 29 E.C.S. 173+34.26, and

7) **North 47°45'05" West**, a distance of **21.21 feet** to a TXDOT Type II bronze disk set in concrete 83.43 feet right of S.H. 29 E.C.S. 173+19.17, and

8) **North 83°22'37" West**, a distance of **15.61 feet** to a TXDOT Type II bronze disk set in concrete 81.00 feet right of S.H. 29 E.C.S. 173+03.75, and

9) **South 87°39'07" West**, a distance of **134.88 feet** to a TXDOT Type II bronze disk set in concrete 81.00 feet right of S.H. 29 E.C.S. 171+68.87, and

CERTIFIED TO BE A TRUE AND
CORRECT COPY
NANCY E. RISTER, County Clerk
Williamson County
Page 7 of 13

10) **North 87°46'32" West**, a distance of **10.25 feet** to the **POINT OF BEGINNING**, and containing 0.0587 acres (2,555 sq. ft.) of land.

** Unable to set at the time of survey.

Bearing Basis:
All bearings shown are based on NAD83/2011 Texas Coordinate System, Central Zone (4203). All distances shown are surface and may be converted to grid by dividing by a Surface Adjustment Factor of 1.00011. All coordinates shown are in surface and may be converted by dividing by the same factor. Project units are in U.S. Survey Feet.

THE STATE OF TEXAS §
§ KNOW ALL MEN BY THESE PRESENTS:
COUNTY OF TRAVIS §

That I, Scott C. Brashear, a Registered Professional Land Surveyor, do hereby certify that the above description is true and correct to the best of my knowledge and belief and that the property described herein was determined by a survey made on the ground under my direction and supervision.

WITNESS MY HAND AND SEAL at Austin, Travis County, Texas, on the date shown below.

SURVEYING AND MAPPING, LLC
4801 Southwest Pkwy
Building Two, Suite 100
Austin, Texas 78735
TX. Firm No. 10064300

STATE OF TEXAS
SCOTT C. BRASHEAR
6660
REGISTERED
LAND SURVEYOR

Scott C. Brashear 4/5/2024
Scott C. Brashear Date
Registered Professional Land Surveyor
No. 6660 – State of Texas

FN 49626

SAM Job No. 52245F

CERTIFIED TO BE A TRUE AND
CORRECT COPY
NANCY E. RISTER, County Clerk
Williamson County
Page 8 of 13

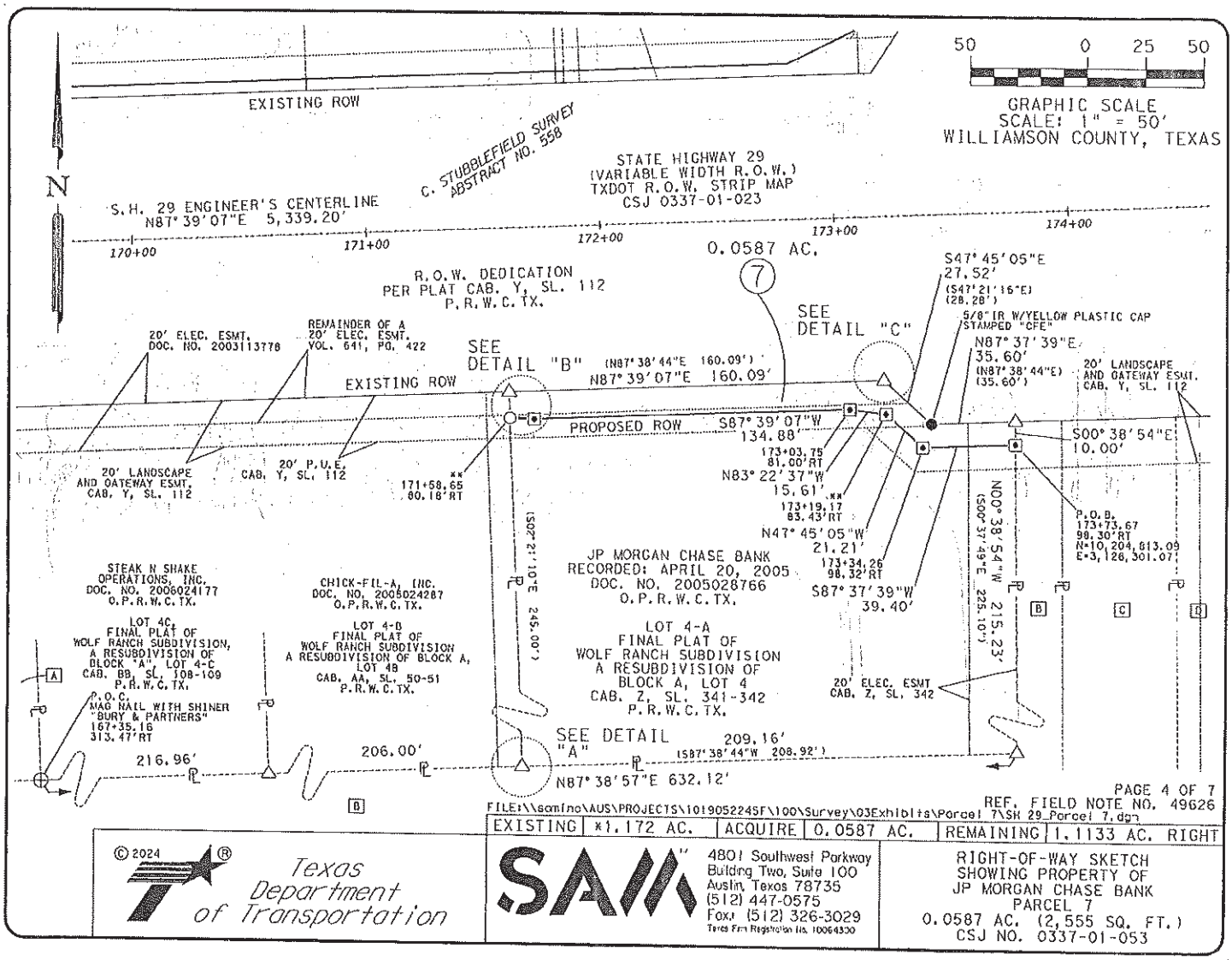

PAGE 4 OF 7
REF. FIELD NOTE NO. 49626

FILE:\\samino\AUS\PROJECTS\101905224SF\100\Survey\03Exhibits\Parcel 7\SH 29_Parcel 7.dgn

EXISTING	±1.172 AC.	ACQUIRE	0.0587 AC.	REMAINING	1.1133 AC. RIGHT

© 2024

Texas Department of Transportation

SAM
4801 Southwest Parkway
Building Two, Suite 100
Austin, Texas 78735
(512) 447-0575
Fax: (512) 326-3029
Texas Firm Registration No. 10064300

RIGHT-OF-WAY SKETCH
SHOWING PROPERTY OF
JP MORGAN CHASE BANK
PARCEL 7
0.0587 AC. (2,555 SQ. FT.)
CSJ NO. 0337-01-053

CERTIFIED TO BE A TRUE AND
CORRECT COPY
NANCY E. RISTER, County Clerk
Williamson County
Page 9 of 13

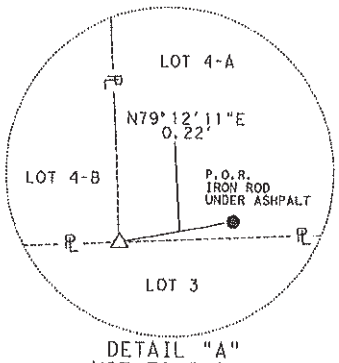

DETAIL "A"
NOT TO SCALE

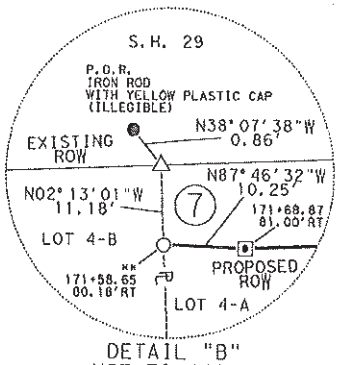

DETAIL "B"
NOT TO SCALE

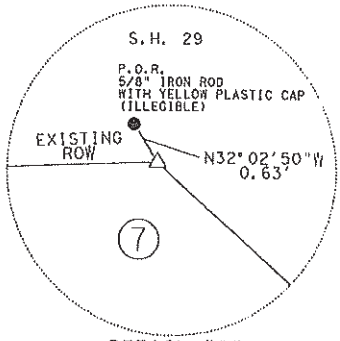

DETAIL "C"
NOT TO SCALE

REF. FIELD NOTE NO. 49626

FILE:\\samino\AUS\PROJECTS\1019052245F\100\Survey\03Exhibits\Parcel 7\SH 29_Parcel 7.dgn

EXISTING	±1.172 AC.	ACQUIRE	0.0587 AC.	REMAINING	1.1133 AC. RIGHT

© 2024

Texas Department of Transportation

SAM™
4801 Southwest Parkway
Building Two, Suite 100
Austin, Texas 78735
(512) 447-0575
Fax: (512) 326-3029
Texas Firm Registration No. 10064500

RIGHT-OF-WAY SKETCH
SHOWING PROPERTY OF
JP MORGAN CHASE BANK
PARCEL 7
0.0587 AC. (2,555 SQ. FT.)
CSJ NO. 0337-01-053

CERTIFIED TO BE A TRUE AND
CORRECT COPY

NANCY E. RISTER, County Clerk
Williamson County

SCHEDULE B:

THIS SURVEY HEREON WAS PREPARED IN CONJUCTION WITH THAT COMMITMENT FOR TITLE INSURANCE OF NO. 24-779532-GT, ISSUED BY FIRST NATIONAL TITLE INSURANCE COMPANY, EFFECTIVE DATE JANUARY 18, 2024, AND ISSUED DATE JANUARY 25, 2024.

10. THE FOLLOWING MATTERS AND ALL TERMS OF THE DOCUMENTS CREATING OR OFFERING EVIDENCE OF THE MATTERS (WE MUST INSERT MATTERS OR DELETE THIS EXCEPTION.):

A. ALL LEASES, GRANTS, EXCEPTIONS OR RESERVATIONS OF COAL, LIGNITE, OIL, GAS AND OTHER MINERALS, TOGETHER WITH ALL RIGHTS, PRIVILEGES AND IMMUNITIES RELATING THERETO, APPEARING IN THE PUBLIC RECORDS WHETHER LISTED IN SCHEDULE B OR NOT. THERE MAY BE LEASES, GRANTS, EXCEPTIONS OR RESERVATIONS OF MINERAL INTEREST THAT ARE NOT LISTED.

B. ALL LEASES, GRANTS, EXCEPTIONS OR RESERVATIONS OF THE GEOTHERMAL ENERGY AND ASSOCIATED RESOURCES BELOW THE SURFACE OF THE LAND, TOGETHER WITH ALL RIGHTS, PRIVILEGES, AND IMMUNITIES RELATING THERETO, APPEARING IN THE PUBLIC RECORDS WHETHER LISTED IN SCHEDULE B OR NOT. THERE MAY BE LEASES, GRANTS, EXCEPTIONS OR RESERVATIONS OF THE GEOTHERMAL ENERGY AND ASSOCIATED RESOURCES BELOW THE SURFACE OF THE LAND THAT ARE NOT LISTED.

C. ALL VISIBLE AND APPARENT EASEMENTS OR USES AND ALL UNDERGROUND EASEMENTS OR USES, THE EXISTENCE OF WHICH MAY ARISE BY UNRECORDED GRANT OR BY USE.

D. RIGHTS OF PARTIES IN POSSESSION.

E. RIGHTS OF TENANTS, AS TENANTS ONLY, UNDER UNRECORDED LEASES OR RENTAL AGREEMENTS.

F. THE FOLLOWING EASEMENT(S) AND/OR BUILDING LINE(S) AFFECTING THE SUBJECT PROPERTY AS SHOWN ON MAP OR PLAT RECORDED IN CABINET Z, SLIDE 341, MAP OR PLAT RECORDS, WILLIAMSON COUNTY, TEXAS:

A 20 FOOT UTILITY EASEMENT ALONG THE NORTH PROPERTY LINE. (AFFECTS PARCEL AS SHOWN)

A 20 FOOT GATEWAY/LANDSCAPE EASEMENT ALONG THE NORTH PROPERTY LINE. (AFFECTS PARCEL AS SHOWN)

G. ACCESS MAINTENANCE CHARGE SET OUT IN INSTRUVENT RECORDED IN DOCUMENT NO. 2005028767, REAL PROPERTY RECORDS, WILLIAMSON COUNTY, TEXAS. (MAY AFFECT PARCEL)

H. A 20 FOOT RIGHT OF WAY AND EASEMENT GRANTED TO THE CITY OF GEORGETOWN, RECORDED IN VOLUME 641, PAGE 422, DEED RECORDS, WILLIAMSON COUNTY, TEXAS. (AFFECTS PARCEL AS SHOWN)

I. DEVELOPMENT AGREEMENT REGARDING DEVELOPMENT OF WOLF RANCH ENTERED INTO SEPTEMBER 11, 2003, BY AND BETWEEN CITY OF GEORGETOWN AND FORESTVILLE ASSOCIATES RECORDED UNDER DOCUMENT NO. 2003089648 AND RE-RECORDED UNDER DOCUMENT NO. 2003119077, OFFICIAL PUBLIC RECORDS, WILLIAMSON COUNTY, TEXAS. AMENDED BY INSTRUVENT RECORDED IN DOCUMENT NO. 2006051008, REAL PROPERTY RECORDS, WILLIAMSON COUNTY, TEXAS. (MAY AFFECT PARCEL)

J. ACCESS EASEMENT AGREEMENT ENTERED INTO OCTOBER 16, 2003, BY AND BETWEEN BETTIE WOLF, (INDIVIDUALLY, AND AS CO-INDEPENDENT EXECUTOR OF ESTATE OF JAY L. WOLF, JANE WOLF ROBERTSON, IVA WOLF MCLACHLAN, JUDY WOLF HINDELANG, INDIVIDUALLY, AND ASCO-INDEPENDENT EXECUTOR OF THE ESTATE OF JAY L. WOLF, JAY LEON WOLF, JR. AND DAVID WOLF, INDIVIDUALLY, AND AS CO-INDEPENDENT EXECUTOR OF THE ESTATE OF JAY L. WOLF AND SPG WOLF RANCH, L.P., RECORDED UNDER DOCUMENT NO. 2003101405, OFFICIAL PUBLIC RECORDS, WILLIAMSON COUNTY, TEXAS. (DOES NOT AFFECT PARCEL)

K. OPERATION AND EASEMENT AGREEMENT DATED DECEMBER 31, 2003, BY AND BETWEEN TARGET CORPORATION AND SPG WOLF RANCH, L.P., RECORDED UNDER DOCUMENT NO. 2003124160, OFFICIAL PUBLIC RECORDS, WILLIAMSON COUNTY, TEXAS, AND SUPPLEMENTAL AGREEMENT DATED SEPTEMBER 20, 2004 BY AND BETWEEN SPG WOLF RANCH, L.P. AND KOHL'S TEXAS, L.P., AS SET OUT IN MEMORANDUM OF SUPPLEMENTAL AGREEMENT RECORDED UNDER DOCUMENT NO. 2004073657, OFFICIAL PUBLIC RECORDS, WILLIAMSON COUNTY, TEXAS. (MAY AFFECT PARCEL)

L. TERMS AND CONDITIONS OF THAT CERTAIN COVENANTS, CONDITIONS AND RESTRICTIONS AGREEMENT RECORDED IN DOCUMENT NO. 2005028767, REAL PROPERTY RECORDS, WILLIAMSON COUNTY, TEXAS. AS AFFECTED BY ASSIGNMENT OF OPERATING AGREEMENT RECORDED IN DOCUMENT NO. 2014079108, REAL PROPERTY RECORDS, WILLIAMSON COUNTY, TEXAS. (MAY AFFECT PARCEL)

M. ELECTRIC EASEMENT DATED NOVEMBER 20, 2003, EXECUTED BY SPG WOLF RANCH, L.P. TO CITY OF GEORGETOWN, RECORDED UNDER DOCUMENT NO. 2003113778, OFFICIAL PUBLIC RECORDS, WILLIAMSON COUNTY, TEXAS. (DOES NOT AFFECT PARCEL)

N. EDWARDS AQUIFER PROTECTION PLAN APPROVAL ATTACHED TO AFFIDAVIT FILED FEBRUARY 23, 2004, RECORDED UNDER DOCUMENT NO. 2004013553, OFFICIAL PUBLIC RECORDS, WILLIAMSON COUNTY, TEXAS. (MAY AFFECT PARCEL)

O. ACCESS EASEMENT RESERVED IN INSTRUVENT RECORDED IN DOCUMENT NO. 2005028766, REAL PROPERTY RECORDS, WILLIAMSON COUNTY, TEXAS. (DOES NOT AFFECT PARCEL)

P. GRANT OF RIGHT OF FIRST OFFER RESERVED BY DEVELOPER SPG WOLF RANCH, LP, IN INSTRUMENT RECORDED IN DOCUMENT NO. 2005028767, REAL PROPERTY RECORDS, WILLIAMSON COUNTY, TEXAS. (MAY AFFECT PARCEL)

REF. FIELD NOTE NO. 49626

FILE:\\saminc\AUS\PROJECTS\1019052245F\100\Survey\03Exhibits\Parcel 7\SH 29_Parcel 7.dgn

EXISTING	±1.172 AC.	ACQUIRE	0.0587 AC.	REMAINING	1.1133 AC. RIGHT

© 2024

Texas Department of Transportation

SAM
4801 Southwest Parkway
Building Two, Suite 100
Austin, Texas 78735
(512) 447-0575
Fax: (512) 326-3029
Texas Firm Registration No. 10064300

RIGHT-OF-WAY SKETCH
SHOWING PROPERTY OF
JP MORGAN CHASE BANK
PARCEL 7
0.0587 AC. (2,555 SQ. FT.)
CSJ NO. 0337-01-053

CERTIFIED TO BE A TRUE AND CORRECT COPY
NANCY E. RISTER, County Clerk
Williamson County
Page 11 of 13

LEGEND

■	TYPE I CONCRETE MONUMENT FOUND
◎	TYPE II BRONZE DISK IN CONCRETE FOUND
◉	TYPE II BRONZE DISK IN CONCRETE SET
○	5/8" IRON ROD SET WITH TXDOT ALUMINUM CAP
●	5/8" IRON ROD FOUND (AS NOTED)
⊕	NAIL FOUND (AS NOTED)
○	FENCE POST (TYPE NOTED)
△	CALCULATED POINT
℄	PROPERTY LINE
( )	RECORD INFORMATION
P.O.B.	POINT OF BEGINNING
P.O.C.	POINT OF COMMENCING
P.O.R.	POINT OF REFERENCE
N.T.S.	NOT TO SCALE
P.R.W.C.TX.	PLAT RECORDS OF WILLIAMSON COUNTY, TEXAS
O.P.R.W.C.TX.	OFFICIAL PUBLIC RECORDS OF WILLIAMSON COUNTY, TEXAS
	DISTANCE NOT TO SCALE
	DEED LINE (COMMON OWNERSHIP)
	PROPERTY LINE
	EXISTING RIGHT-OF-WAY
	PARCEL LIMITS
	PROPOSED DRAINAGE EASEMENT
	EXISTING EASEMENT LINE

N

[A]
STEPHEN PAUL ELSTON
AND CAROL RENEE ELSTON,
AS TRUSTEES OF THE ELSTON FAMILY TRUST
DOC. NO. 2010060072
O.P.R.W.C.TX.

LOT 4-D, BLOCK "A"
FINAL PLAT OF WOLF RANCH SUBDIVISION,
A RESUBDIVISION OF BLOCK "A",
LOT 4D OF THE RESUBDIVISION OF BLOCK "A", LOT 4-C
CAB. GG, SL. 51-52
P.R.W.C.TX.

[B]
TARGET CORPORATION
DOC. NO. 2003124159
O.P.R.W.C.TX.

LOT 3, BLOCK "A"
WOLF RANCH SUBDIVISION
CAB. Y, SL. 112-115
P.R.W.C.TX.

S.H. 29
EXISTING ROW

PROPOSED ROW

P.O.B.

(7)
0.0587 AC.

N02°13'01"W
233.27'

JP MORGAN CHASE BANK
RECORDED: APRIL 20, 2005
DOC. NO. 2005028766
O.P.R.W.C.TX.

LOT 4-A
FINAL PLAT OF WOLF RANCH SUBDIVISION
A RESUBDIVISION OF
BLOCK A, LOT 4
CAB. Z, SL. 341-342
P.R.W.C.TX.

216.96'

206.00'

P.O.C.

N87°38'57"E 422.96'

PARENT TRACT INSET
N.T.S.

NOTES:

1. ALL PROJECT COORDINATES AND BEARINGS ARE GRID NORTH BASED ON THE TEXAS COORDINATE SYSTEM, CENTRAL ZONE (4203), NAD 83 (2011), EPOCH 2010.0. ALL SURFACE COORDINATES SHOWN HEREON MAY BE CONVERTED TO GRID BY DIVIDING BY A SURFACE ADJUSTMENT FACTOR OF 1.00031. UNITS: U.S. SURVEY FEET, SURVEY DATE: AUGUST, 2023

2. THIS SURVEY WAS COMPLETED WITH THE BENEFIT OF TITLE REPORT, PROVIDED BY FIRST NATIONAL TITLE INSURANCE COMPANY, GF NO. 24-779532-GT, EFFECTIVE DATE JANUARY 18, 2024, AND ISSUED DATE JANUARY 25, 2024. THERE MAY BE EASEMENTS OR OTHER MATTERS, RECORDED OR UNRECORDED, THAT ARE NOT SHOWN.

3. A PROPERTY DESCRIPTION OF EVEN DATE WAS PREPARED IN CONJUNCTION WITH THIS PARCEL PLAT.

* AREA CALCULATED BY SAM, LLC.

** UNABLE TO SET AT THE TIME OF SURVEY

I HEREBY CERTIFY THAT THIS SURVEY WAS MADE ON THE GROUND UNDER MY DIRECTION AND SUPERVISION AND THAT THIS PLAT IS TRUE AND CORRECT TO THE BEST OF MY KNOWLEDGE AND BELIEF.

STATE OF TEXAS
6660
SCOTT C. BRASHEAR
REGISTERED PROFESSIONAL LAND SURVEYOR

Scott C. Brashear
SCOTT C. BRASHEAR
REGISTERED PROFESSIONAL LAND SURVEYOR
NO. 6660, STATE OF TEXAS

4/5/2024
DATE

[C]
WPG WOLF RANCH, LLC
TRACT 2
DOC. NO. 2014044665
O.P.R.W.C.TX.

LOT 2A, BLOCK "A"
AMENDED PLAT OF LOT 2 AND LOT 8,
BLOCK "A", WOLF RANCH SUBDIVISION
CAB. AA, SLIDE 220-223
P.R.W.C.TX.

[D]
VERABANK, N.A.
DOC. NO. 2022112485
O.P.R.W.C.TX.

LOT 5A
FINAL PLAT OF WOLF RANCH SUBDIVISION
A RESUBDIVISION OF
BLOCK "A", LOTS 5, 6, AND 9
CAB. BB, SL. 106-107
P.R.W.C.TX.

PAGE 7 OF 7
REF. FIELD NOTE NO. 49626

FILE:\\saminc\AUS\PROJECTS\1019052245F\100\Survey\03Exhibits\Parcel 7\SH 29_Parcel 7.dgn

EXISTING	*1.172 AC.	ACQUIRE	0.0587 AC.	REMAINING	1.1133 AC. RIGHT

© 2024

Texas Department of Transportation

SAM
4801 Southwest Parkway
Building Two, Suite 100
Austin, Texas 78735
(512) 447-0575
Fax: (512) 326-3029
Texas Firm Registration No. 10064300

RIGHT-OF-WAY SKETCH
SHOWING PROPERTY OF
JP MORGAN CHASE BANK
PARCEL 7
0.0587 AC. (2,555 SQ. FT.)
CSJ NO. 0337-01-053

CERTIFIED TO BE A TRUE AND CORRECT COPY
NANCY E. RISTER, County Clerk
Williamson County

Automated Certificate of eService

This automated certificate of service was created by the efiling system. The filer served this document via email generated by the efiling system on the date and to the persons listed below. The rules governing certificates of service have not changed. Filers must still provide a certificate of service that complies with all applicable rules.

Envelope ID: 102824512
Filing Code Description: Proposed Order
Filing Description: Award of Special Commissioners JP Morgan P7
Status as of 7/7/2025 4:14 PM CST

Case Contacts

Name	BarNumber	Email	TimestampSubmitted	Status
Kristina Silcocks		kristina.silcocks@phelps.com	7/7/2025 3:16:39 PM	SENT

STATE OF TEXAS
COUNTY OF WILLIAMSON
I, NANCY E. RISTER, COUNTY CLERK, DO HEREBY CERTIFY THAT THIS IS A TRUE AND CORRECT COPY AS SAME APPEARS OF RECORD IN MY CUSTODY.
Witness my hand and seal of office on 7/9/2025
NANCY E. RISTER, COUNTY CLERK
WILLIAMSON COUNTY, TEXAS
By _____ Deputy

CERTIFIED TO BE A TRUE AND CORRECT COPY
NANCY E. RISTER, County Clerk
Williamson County

ELECTRONICALLY RECORDED 2025080533
Williamson County, Texas Total Pages: 11

NOTICE OF CONFIDENTIALITY RIGHTS: IF YOU ARE A NATURAL PERSON, YOU MAY REMOVE OR STRIKE ANY OR ALL OF THE FOLLOWING INFORMATION FROM ANY INSTRUMENT THAT TRANSFERS AN INTEREST IN REAL PROPERTY BEFORE IT IS FILED FOR RECORD IN THE PUBLIC RECORDS: YOUR SOCIAL SECURITY NUMBER OR YOUR DRIVER'S LICENSE NUMBER.

AUSTIN TITLE COMPANY

GF# 170/342400740

SPECIAL WARRANTY DEED

STATE OF TEXAS §
§ KNOW ALL PERSONS BY THESE PRESENTS:
COUNTY OF WILLIAMSON §

THAT, VeraBank, N.A., a national banking association ("**Grantor**"), for and in consideration of One Dollar ($1.00) and other good and valuable consideration paid in cash to the Grantor by the Grantee herein named, the receipt and sufficiency of which are hereby acknowledged, has GRANTED, BARGAINED, SOLD AND CONVEYED and by these presents does hereby GRANT, BARGAIN, SELL AND CONVEY unto CITY OF GEORGETOWN ("**Grantee**"), all that certain tract or parcel of land in Williamson County, Texas, described as:

> Being a 0.0466-acre (2,030 square foot) parcel of land, more or less, said parcel being more fully described in **Exhibit "A"** and depicted in **Exhibit "B"**, each being attached hereto and by this reference incorporated herein (the "**Property**").

THIS CONVEYANCE IS MADE BY GRANTOR AND ACCEPTED BY GRANTEE subject to all valid and subsisting encumbrances, conditions, covenants, restrictions, reservations, exceptions, rights of way and easements, appearing of record in the Official Public Records of Williamson County, Texas, but only to the extent the same are applicable to the Property.

TO HAVE AND TO HOLD the Property, together with all and singular the rights and appurtenances thereto in any way belonging, unto Grantee and Grantee's successors and assigns forever. Grantor hereby binds Grantor, and Grantor's successors and assigns, to warrant and forever defend all and singular the Property unto Grantee, and Grantee's successors and assigns against every person whomsoever lawfully claiming or to claim the same or any part thereof by, through or under Grantor, but not otherwise, save and except the reservations from conveyance and the exceptions to conveyance and warranty described above.

When the context requires, singular nouns and pronouns include the plural.

[Signature Page Follows]

IN WITNESS WHEREOF, the Grantor herein has executed this Special Warranty Deed, to be effective as of the 10th day of October, 2025.

GRANTOR:

VeraBank, N.A.,
a national banking association

By: _____
Name: Jon Tate
Title: Vice President

STATE OF TEXAS

COUNTY OF Williamson

This instrument was acknowledged before me on October 10, 2025, by Jon Tate, Vice President of Verabank, N.A., a national banking association, on behalf of said entity.

_____
Notary Public, State of Texas

EVAN HAYS
Notary Public, State of Texas
Comm. Expires 05-14-2029
Notary ID 129423550

GRANTEE:

City of Georgetown,
a Texas home-rule municipal corporation

By: _____
David Morgan, City Manager

STATE OF TEXAS §
§
COUNTY OF WILLIAMSON §

This instrument was acknowledged before me on this the 1st day of October, 2025, by David Morgan, City Manager of the City of Georgetown, a Texas home-rule municipal corporation, on behalf of said corporation.

Shannon Biddle
My Commission Expires
9/26/2026
Notary ID 133982902

_____
Notary Public, State of Texas

APPROVED AS TO FORM:

_____
Andrew Culpepper, Assistant City Attorney

AFTER RECORDING, RETURN TO:
City of Georgetown
Attn: Real Estate Services
P.O. Box 409
Georgetown, Texas 78627

EXHIBIT "A"

County: Williamson
Highway: S.H. 29
Limits: From 0.161 Miles West of Wolf Ranch Parkway To I.H. 35
CCSJ: 0337-01-053
Parcel No.: 8

THENCE, departing the common line of said Lot 5A and said Lot 2A, with the existing south right-of-way line of said S.H. 29, the following three (3) courses and distances numbered 6-8:

6) **North 87°37'39" East**, a distance of **35.41 feet** to a calculated point, from which a 5/8-inch iron rod with a yellow plastic cap stamped "Bury & Partners" found bears, South 43°45'34" East, a distance of 0.22 feet, and

7) **North 42°35'33" East**, a distance of **27.21 feet** to a calculated point, from which a 5/8-inch iron rod found bears, North 53°04'27" East, a distance of 1.01 feet, and

8) **North 87°39'07" East**, a distance of **257.39 feet** to a calculated point, for the northwest corner of said Lot 5B, same being the northeast corner of said Lot 5A and of the parcel described herein, from which a mag nail found bears North 02°20'55" West, a distance of 0.50 feet;

9) **THENCE, South 02°20'55" East**, departing the existing south right-of-way line of said S.H. 29, with the west line of said Lot 4B and the east line of said Lot 4A, a distance of **5.00 feet** to the **POINT OF BEGINNING**, and containing 0.0466 acres (2,030 sq. ft.) of land.

Bearing Basis:
All bearings shown are based on NAD83/2011 Texas Coordinate System, Central Zone (4203). All distances shown are surface and may be converted to grid by dividing by a Surface Adjustment Factor of 1.00011. All coordinates shown are in surface and may be converted by dividing by the same factor. Project units are in U.S. Survey Feet.

THE STATE OF TEXAS §
§ KNOW ALL MEN BY THESE PRESENTS:
COUNTY OF TRAVIS §

That I, Scott C. Brashear, a Registered Professional Land Surveyor, do hereby certify that the above description is true and correct to the best of my knowledge and belief and that the property described herein was determined by a survey made on the ground under my direction and supervision.

WITNESS MY HAND AND SEAL at Austin, Travis County, Texas, on the date shown below.

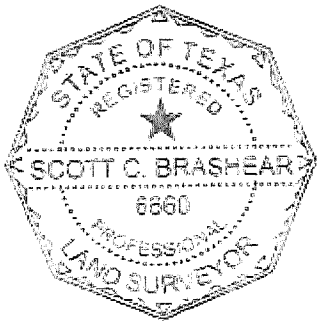

SURVEYING AND MAPPING, LLC
4801 Southwest Pkwy
Building Two, Suite 100
Austin, Texas 78735
TX. Firm No. 10064300

Scott C. Brashear 4/5/2024
Scott C. Brashear Date
Registered Professional Land Surveyor
No. 6660 – State of Texas

FN 49643

SAM Job No. 52245F

EXHIBIT "B"

LINE TABLE

LINE NO.	BEARING	DISTANCE
L1	S74° 57' 11"W	31.52'
L2	S42° 35' 33"W	24.48'
L3	S87° 37' 39"W	39.86'
L4	N00° 37' 43"W	10.00'
(L4)	(N00° 37' 49"W)	(158.58')
L5	N87° 37' 39"E	35.41'
(L5)	(N87° 38' 44"E)	(35.36')
L6	N42° 35' 33"E	27.21'
(L6)	(N42° 38' 44"E)	(28.28')
L7	S02° 20' 55"E	5.00'
(L7)	(N02° 21' 16"W)	(229.50')

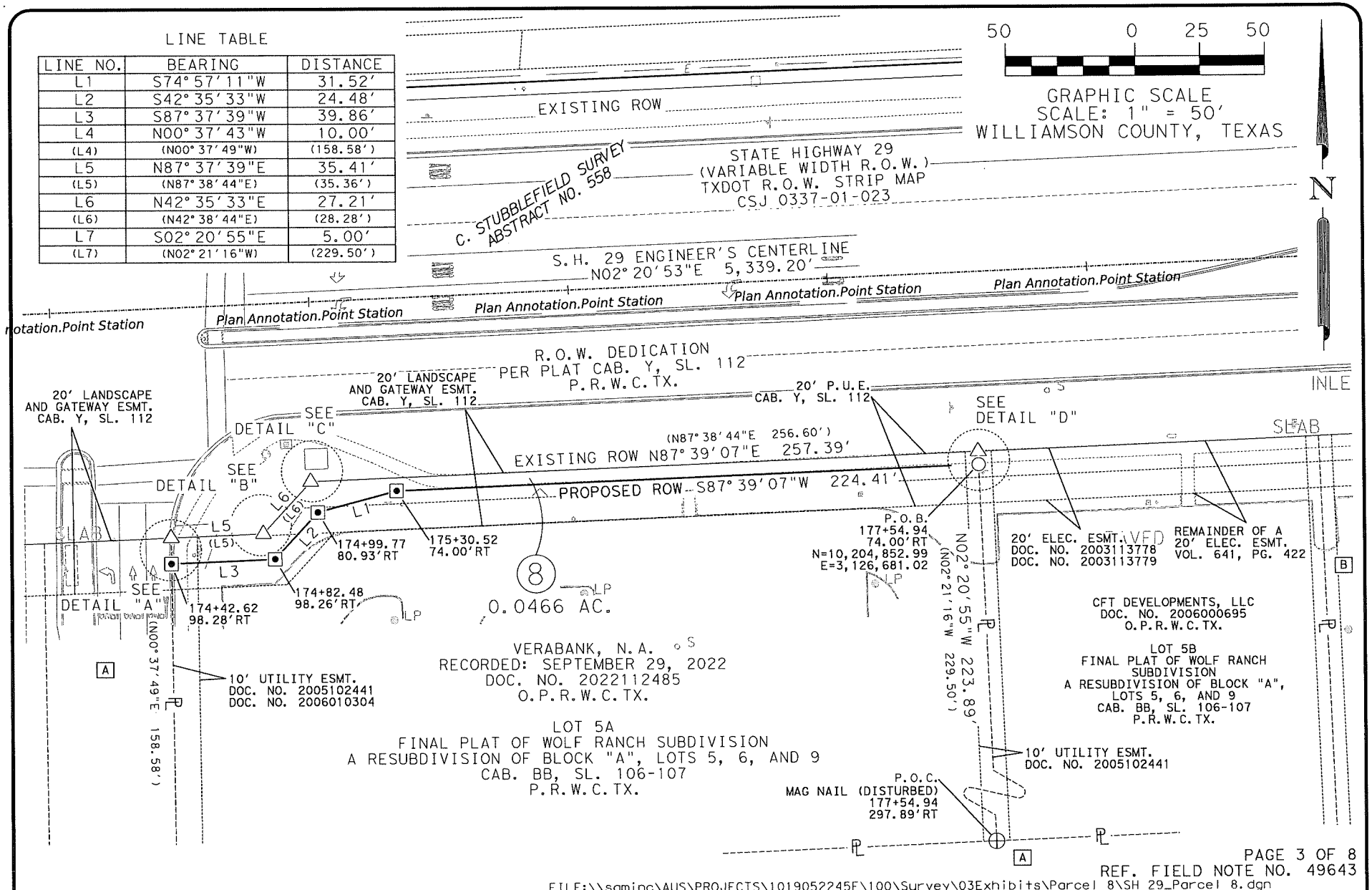

PAGE 3 OF 8
REF. FIELD NOTE NO. 49643

FILE:\\saminc\AUS\PROJECTS\1019052245F\100\Survey\03Exhibits\Parcel 8\SH 29_Parcel 8.dgn

EXISTING	*1.622 AC.	ACQUIRE	0.0466 AC.	REMAINING	1.5754 AC. RIGHT

© 2024

Texas Department of Transportation

SAM™
4801 Southwest Parkway
Building Two, Suite 100
Austin, Texas 78735
(512) 447-0575
Fax: (512) 326-3029
Texas Firm Registration No. 10064300

RIGHT-OF-WAY SKETCH
SHOWING PROPERTY OF
VERABANK, N.A.
PARCEL 8
0.0466 AC. (2,030 SQ. FT.)
CSJ NO. 0337-01-053

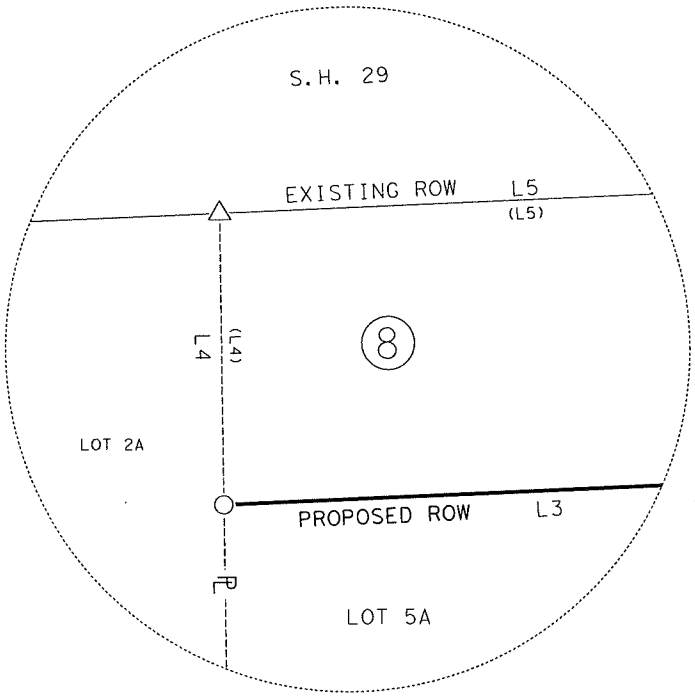

DETAIL "A"
NOT TO SCALE

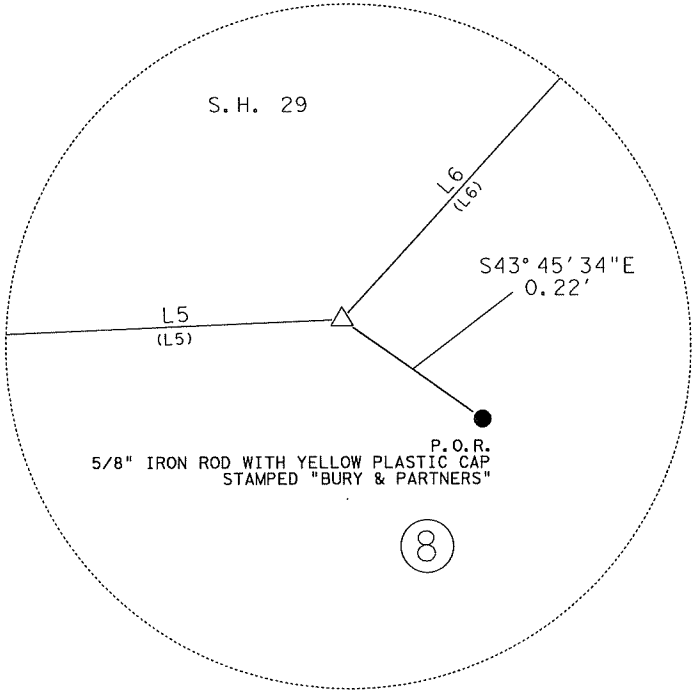

DETAIL "B"
NOT TO SCALE

LINE TABLE

LINE NO.	BEARING	DISTANCE
L3	S87° 37' 39"W	39.86'
L4	N00° 37' 43"W	10.00'
(L4)	(N00° 37' 49"W)	(158.58')
L5	N87° 37' 39"E	35.41'
(L5)	(N87° 38' 44"E)	(35.36')
L6	N42° 35' 33"E	27.21'
(L6)	(N42° 38' 44"E)	(28.28')

REF. FIELD NOTE NO. 49643
FILE:\\saminc\AUS\PROJECTS\1019052245F\100\Survey\03Exhibits\Parcel 8\SH 29_Parcel 8.dgn

EXISTING	*1.622 AC.	ACQUIRE	0.0466 AC.	REMAINING	1.5754 AC. RIGHT

© 2024
Texas Department of Transportation

SAM™
4801 Southwest Parkway
Building Two, Suite 100
Austin, Texas 78735
(512) 447-0575
Fax: (512) 326-3029
Texas Firm Registration No. 10064300

RIGHT-OF-WAY SKETCH
SHOWING PROPERTY OF
VERABANK, N.A.
PARCEL 8
0.0466 AC. (2,030 SQ. FT.)
CSJ NO. 0337-01-053

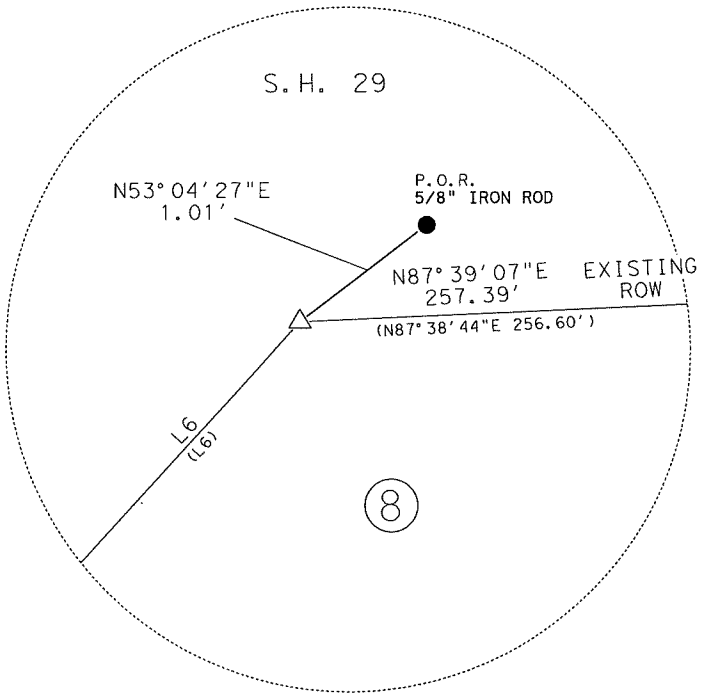

DETAIL "C"
NOT TO SCALE

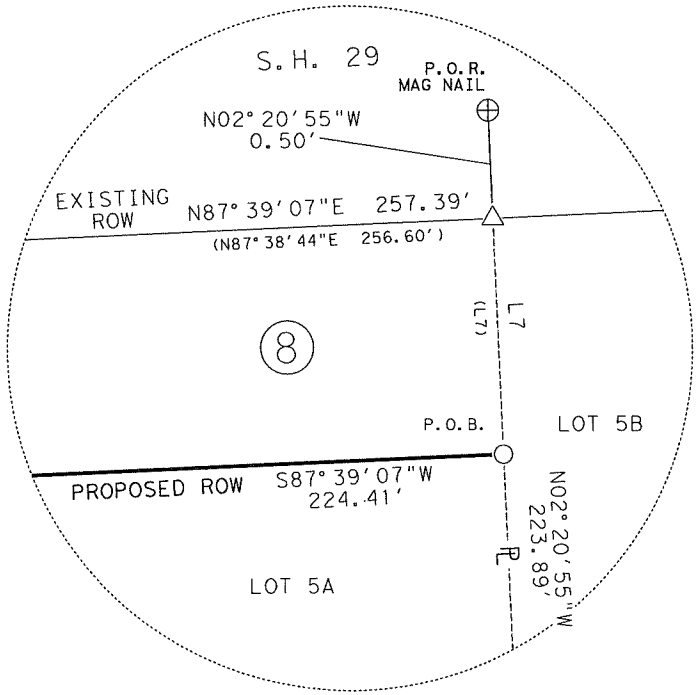

DETAIL "D"
NOT TO SCALE

LINE TABLE

LINE NO.	BEARING	DISTANCE
L6	N42°35'33"E	27.21'
(L6)	(N42°38'44"E)	(28.28')
L7	S02°20'55"E	5.00'
(L7)	(N02°21'16"W)	(229.50')

REF. FIELD NOTE NO. 49643
FILE:\\saminc\AUS\PROJECTS\1019052245F\100\Survey\03Exhibits\Parcel 8\SH 29_Parcel 8.dgn

EXISTING	*1.622 AC.	ACQUIRE	0.0466 AC.	REMAINING	1.5754 AC. RIGHT

© 2024
Texas Department of Transportation

SAM™
4801 Southwest Parkway
Building Two, Suite 100
Austin, Texas 78735
(512) 447-0575
Fax: (512) 326-3029
Texas Firm Registration No. 10064300

RIGHT-OF-WAY SKETCH
SHOWING PROPERTY OF
VERABANK, N.A.
PARCEL 8
0.0466 AC. (2,030 SQ. FT.)
CSJ NO. 0337-01-053

SCHEDULE B:

THIS SURVEY HEREON WAS PREPARED IN CONJUCTION WITH THAT COMMITMENT FOR TITLE INSURANCE GF NO. 24-779543-GT, ISSUED BY FIRST NATIONAL TITLE INSURANCE COMPANY, EFFECTIVE DATE JANUARY 18, 2024, AND ISSUED DATE JANUARY 25, 2024.

10. THE FOLLOWING MATTERS AND ALL TERMS OF THE DOCUMENTS CREATING OR OFFERING EVIDENCE OF THE MATTERS (WE MUST INSERT MATTERS OR DELETE THIS EXCEPTION.):

A. ALL LEASES, GRANTS, EXCEPTIONS OR RESERVATIONS OF COAL, LIGNITE, OIL, GAS AND OTHER MINERALS, TOGETHER WITH ALL RIGHTS, PRIVILEGES AND IMMUNITIES RELATING THERETO, APPEARING IN THE PUBLIC RECORDS WHETHER LISTED IN SCHEDULE B OR NOT. THERE MAY BE LEASES, GRANTS, EXCEPTIONS OR RESERVATIONS OF MINERAL INTEREST THAT ARE NOT LISTED.

B. ALL LEASES, GRANTS, EXCEPTIONS OR RESERVATIONS OF THE GEOTHERMAL ENERGY AND ASSOCIATED RESOURCES BELOW THE SURFACE OF THE LAND, TOGETHER WITH ALL RIGHTS, PRIVILEGES, AND IMMUNITIES RELATING THERETO, APPEARING IN THE PUBLIC RECORDS WHETHER LISTED IN SCHEDULE B OR NOT. THERE MAY BE LEASES, GRANTS, EXCEPTIONS OR RESERVATIONS OF THE GEOTHERMAL ENERGY AND ASSOCIATED RESOURCES BELOW THE SURFACE OF THE LAND THAT ARE NOT LISTED.

C. ALL VISIBLE AND APPARENT EASEMENTS OR USES AND ALL UNDERGROUND EASEMENTS OR USES, THE EXISTENCE OF WHICH MAY ARISE BY UNRECORDED GRANT OR BY USE.

D. RIGHTS OF PARTIES IN POSSESSION.

E. RIGHTS OF TENANTS, AS TENANTS ONLY, UNDER UNRECORDED LEASES OR RENTAL AGREEMENTS.

F. RIGHTS OF THE PUBLIC, THE STATE OF TEXAS AND THE MUNICIPALITY IN AND TO THAT PORTION OF SUBJECT PROPERTY, IF ANY, LYING WITHIN THE BOUNDARIES OF ANY ROADWAY, PUBLIC OR PRIVATE.

G. ANY AND ALL MATTERS WHICH WOULD BE SHOWN ON A CURRENT, CORRECT SURVEY OF THE PROPERTY.

H. EASEMENT(S) AND/OR BUILDING LINE(S) AFFECTING THE SUBJECT PROPERTY AS SHOWN ON MAP OR PLAT RECORDED IN CABINET BB, SLIDE 106, MAP OR PLAT RECORDS, WILLIAMSON COUNTY, TEXAS. (AFFECTS PARCEL AS SHOWN)

I. EASEMENT BY AND BETWEEN JAY L. WOLF, TO TEXAS POWER & LIGHT COMPANY, OF DALLAS TEXAS, DATED NOVEMBER 12, 1963, AND RECORDED APRIL 6, 1967, IN/UNDER VOLUME 467, PAGE 400, OF THE REAL PROPERTY RECORDS OF WILLIAMSON COUNTY, TEXAS. (DOES NOT AFFECT PARCEL)

J. RIGHT OF WAY AND EASEMENT BY AND BETWEEN JAY L. WOLF AND WIFE, BETTY WOLF, TO THE CITY OF GEORGETOWN, DATED APRIL 28, 1976, AND RECORDED JULY 22, 1976, IN/UNDER VOLUME 641, PAGE 422, OF THE REAL PROPERTY RECORDS OF WILLIAMSON COUNTY, TEXAS. (AFFECTS PARCEL AS SHOWN)

K. UTILITY EASEMENT BY AND BETWEEN JAY L. WOLF, TO THE CITY OF GEORGETOWN, DATED APRIL 6, 1995, RECORDED IN/UNDER VOLUME 2715, PAGE 107, OF THE REAL PROPERTY RECORDS OF WILLIAMSON COUNTY, TEXAS. (DOES NOT AFFECT PARCEL)

L. TERMS, CONDITIONS AND STIPULATIONS CONTAINED IN THAT CERTAIN DEVELOPMENT AGREEMENT RECORDED IN CLERK'S FILE NO. 2003089648, RE-RECORDED IN CLERK'S FILE NO. 2003119077, REAL PROPERTY RECORDS OF WILLIAMSON COUNTY, TEXAS, BEING FURTHER AFFECTED BY CLERK'S FILE NOS. 2004049241 AND 2006051008, REAL PROPERTY RECORDS OF WILLIAMSON COUNTY, TEXAS REFERENCE IS HEREBY MADE TO SAID DOCUMENT FOR FULL PARTICULARS. (MAY AFFECT PARCEL)

M. ELECTRIC EASEMENT BY AND BETWEEN SPG WOLF RANCH, L.P., A TEXAS LIMITED PARTNERSHIP, TO THE CITY OF GEORGETOWN, DATED NOVEMBER 20, 2003, AND RECORDED NOVEMBER 24, 2003, IN/UNDER COUNTY CLERK'S FILE NUMBER 2003113778, OF THE REAL PROPERTY RECORDS OF WILLIAMSON COUNTY, TEXAS. (AFFECTS PARCEL AS SHOWN)

N. ELECTRIC EASEMENT BY AND BETWEEN SPG WOLF RANCH, L.P., A TEXAS LIMITED PARTNERSHIP, TO THE CITY OF GEORGETOWN, A MUNICIPALITY, DATED NOVEMBER 20, 2003, AND RECORDED NOVEMBER 24, 2003, IN/UNDER COUNTY CLERK'S FILE NUMBER 2003113779, OF THE REAL PROPERTY RECORDS OF WILLIAMSON COUNTY, TEXAS. (AFFECTS PARCEL AS SHOWN)

O. DRAINAGE EASEMENT BY AND BETWEEN SPG WOLF RANCH, L.P., A TEXAS LIMITED PARTNERSHIP, TO THE CITY OF GEORGETOWN, A MUNICIPALITY, DATED NOVEMBER 20, 2003, AND RECORDED NOVEMBER 24, 2003, IN/UNDER COUNTY CLERK'S FILE NUMBER 2003113780, OF THE REAL PROPERTY RECORDS OF WILLIAMSON COUNTY, TEXAS. (DOES NOT AFFECT PARCEL)

P. UTILITY CORRIDOR EASEMENT BY AND BETWEEN SPG WOLF RANCH, L.P., A TEXAS LIMITED PARTNERSHIP, TO THE CITY OF GEORGETOWN, A MUNICIPALITY, DATED NOVEMBER 20, 2003, AND RECORDED NOVEMBER 24, 2003, IN/UNDER COUNTY CLERK'S FILE NUMBER 2003113782, OF THE REAL PROPERTY RECORDS OF WILLIAMSON COUNTY, TEXAS. (DOES NOT AFFECT PARCEL)

Q. WATER/WASTEWATER EASEMENT BY AND BETWEEN SPG WOLF RANCH, L.P., A TEXAS LIMITED PARTNERSHIP, TO THE CITY OF GEORGETOWN, A MUNICIPALITY, DATED NOVEMBER 20, 2003, FILED NOVEMBER 24, 2003, RECORDED IN/UNDER COUNTY CLERK'S FILE NUMBER 2003113783, OF THE REAL PROPERTY RECORDS OF WILLIAMSON COUNTY, TEXAS. (DOES NOT AFFECT PARCEL)

R. EASEMENTS, TERMS, CONDITIONS AND STIPULATIONS CONTAINED IN THAT CERTAIN OPERATION AND EASEMENT AGREEMENT RECORDED IN CLERK'S FILE NO. 2003124160, REAL PROPERTY RECORDS OF WILLIAMSON COUNTY, TEXAS, BEING FURTHER AFFECTED BY CLERK'S FILE NOS. 2007096288, 2011087599, AND 2014079108, REAL PROPERTY RECORDS OF WILLIAMSON COUNTY, TEXAS REFERENCE IS HEREBY MADE TO SAID DOCUMENT FOR FULL PARTICULARS. (MAY AFFECT PARCEL)

S. EDWARDS AQUIFER PROTECTION PLAN APPROVAL ATTACHED TO DEED RECORDATION AFFIDAVIT BY SPG WOLF RANCH, LP, A TEXAS LIMITED LIABILITY PARTNERSHIP, DATED FEBRUARY 20, 2004 AND RECORDED FEBRUARY 23, 2004 IN CLERK'S FILE NO. 2004013553, OF THE REAL PROPERTY RECORDS OF WILLIAMSON COUNTY, TEXAS. (MAY AFFECT PARCEL)

T. EDWARDS AQUIFER PROTECTION PLAN APPROVAL ATTACHED TO DEED RECORDATION AFFIDAVIT BY BRIAN SMITH AN AUTHORIZED SIGNATORY FOR HIBERNIA BANK, DATED FEBRUARY 8, 2006 AND RECORDED FEBRUARY 9, 2006 IN CLERK'S FILE NO. 2006010305, OF THE REAL PROPERTY RECORDS OF WILLIAMSON COUNTY, TEXAS. (MAY AFFECT PARCEL)

U. MEMORANDUM OF SUPPLEMENTAL AGREEMENT RECORDED IN CLERK'S FILE NO. 2004073657, REAL PROPERTY RECORDS OF WILLIAMSON COUNTY, TEXAS REFERENCE IS HEREBY MADE TO SAID DOCUMENT FOR FULL PARTICULARS. (MAY AFFECT PARCEL)

V. EASEMENT(S) FOR THE PURPOSE(S) SHOWN BELOW AND RIGHTS INCIDENTAL THERETO, AS GRANTED IN A DOCUMENT TO CITY OF GEORGETOWN RECORDED IN CLERK'S FILE NO. 2006010304, REAL PROPERTY RECORDS OF WILLIAMSON COUNTY, TEXAS. (AFFECTS PARCEL AS SHOWN)

W. MEMORANDUM OF LEASE AGREEMENT BY AND BETWEEN SPG WOLF RANCH, L.P., A TEXAS LIMITED PARTNERSHIP, AS LESSOR, AND BEST BUY STORES, L.P., A VIRGINIA LIMITED PARTNERSHIP, AS LESSEE, DATED JANUARY 24, 2006, AND RECORDED FEBRUARY 2, 2006 IN/UNDER COUNTY CLERK'S FILE NUMBER 2006008194, OF THE REAL PROPERTY RECORDS OF WILLIAMSON COUNTY, TEXAS. (MAY AFFECT PARCEL)

X. MEMORANDUM OF LEASE AGREEMENT BY AND BETWEEN SPG WOLF RANCH, L.P., A TEXAS LIMITED PARTNERSHIP, AS LESSOR, AND PETSMART, INC., A DELAWARE CORPORATION, AS LESSEE, DATED FEBRUARY 23, 2005, AND RECORDED DECEMBER 27, 2005 IN/UNDER COUNTY CLERK'S FILE NUMBER 2005101775, OF THE REAL PROPERTY RECORDS OF WILLIAMSON COUNTY, TEXAS. (MAY AFFECT PARCEL)

Y. EASEMENT(S) FOR THE PURPOSE(S) SHOWN BELOW AND RIGHTS INCIDENTAL THERETO, AS GRANTED TO CITY OF GEORGETOWN, FILED NOVEMBER 10, 2004 RECORDED IN CLERK'S FILE NO. 2004087631, REAL PROPERTY RECORDS OF TRAVIS COUNTY, TEXAS. (DOES NOT AFFECT PARCEL)

(CONTINUED ON PAGE 7 OF 8)

REF. FIELD NOTE NO. 49643
FILE:\\saminc\AUS\PROJECTS\1019052245F\100\Survey\03Exhibits\Parcel 8\SH 29_Parcel 8.dgn

EXISTING	*1.622 AC.	ACQUIRE	0.0466 AC.	REMAINING	1.5754 AC. RIGHT

© 2024
Texas Department of Transportation

SAM™
4801 Southwest Parkway
Building Two, Suite 100
Austin, Texas 78735
(512) 447-0575
Fax: (512) 326-3029
Texas Firm Registration No. 10064300

RIGHT-OF-WAY SKETCH
SHOWING PROPERTY OF
VERABANK, N.A.
PARCEL 8
0.0466 AC. (2,030 SQ. FT.)
CSJ NO. 0337-01-053

SCHEDULE B: (CONTINUED FROM PAGE 6 OF 8)

Z. UTILITY EASEMENTS RESERVED IN SPECIAL WARRANTY DEED DATED DECEMBER 23, 2005, EXECUTED BY SPG WOLF RANCH, LP, AS RECORDED IN CLERK'S FILE NO. 2005102441, REAL PROPERTY RECORDS OF WILLIAMSON COUNTY, TEXAS. (AFFECTS PARCEL AS SHOWN)

AA. MEMORANDUM OF LEASE AGREEMENT BY AND BETWEEN SPG WOLF RANCH, L.P., A TEXAS LIMITED PARTNERSHIP, AS LESSOR, AND MARMAXX OPERATING CORP., A DELAWARE CORPORATION, AS LESSEE, DATED MARCH 14, 2005, AND RECORDED NOVEMBER 27, 2006 IN/UNDER COUNTY CLERK'S FILE NUMBER 2006102728, OF THE REAL PROPERTY RECORDS OF WILLIAMSON COUNTY, TEXAS. (MAY AFFECT PARCEL)

BB. THE TERMS, PROVISIONS, EASEMENTS, COVENANTS, RESTRICTIONS AS SET FORTH IN INSTRUMENTS RECORDED IN CLERK'S FILE NOS. 2003124160, 2005102442, 2011087597, 2017013539, 2016030815, 2017113189, 2022089914, 2023099707, 2023099708, REAL PROPERTY RECORDS, WILLIAMSON COUNTY, TEXAS; WHEN TAKEN WITH ALL AMENDMENTS AND/OR SUPPLEMENTS THERETO. (MAY AFFECT PARCEL)

REF. FIELD NOTE NO. 49643
FILE:\\saminc\AUS\PROJECTS\1019052245F\100\Survey\03Exhibits\Parcel 8\SH 29_Parcel 8.dgn

EXISTING	*1.622 AC.	ACQUIRE	0.0466 AC.	REMAINING	1.5754 AC. RIGHT

© 2024
Texas Department of Transportation

SAM™
4801 Southwest Parkway
Building Two, Suite 100
Austin, Texas 78735
(512) 447-0575
Fax: (512) 326-3029
Texas Firm Registration No. 10064300

RIGHT-OF-WAY SKETCH
SHOWING PROPERTY OF
VERABANK, N.A.
PARCEL 8
0.0466 AC. (2,030 SQ. FT.)
CSJ NO. 0337-01-053

LEGEND

■	TYPE I CONCRETE MONUMENT FOUND
⊡	TYPE II BRONZE DISK IN CONCRETE FOUND
⊡	TYPE II BRONZE DISK IN CONCRETE SET
○	5/8" IRON ROD SET WITH TXDOT ALUMINUM CAP
●	5/8" IRON ROD FOUND (AS NOTED)
⊕	NAIL FOUND (AS NOTED)
⬡	FENCE POST (TYPE NOTED)
△	CALCULATED POINT
ℙ	PROPERTY LINE
( )	RECORD INFORMATION
P.O.B.	POINT OF BEGINNING
P.O.C.	POINT OF COMMENCING
P.O.R.	POINT OF REFERENCE
N.T.S.	NOT TO SCALE
P.R.W.C.TX.	PLAT RECORDS OF WILLIAMSON COUNTY, TEXAS
O.P.R.W.C.TX.	OFFICIAL PUBLIC RECORDS OF WILLIAMSON COUNTY, TEXAS
	DISTANCE NOT TO SCALE
	DEED LINE (COMMON OWNERSHIP)
	PROPERTY LINE
	EXISTING RIGHT-OF-WAY
	PARCEL LIMITS
	PROPOSED DRAINAGE EASEMENT
	EXISTING EASEMENT LINE



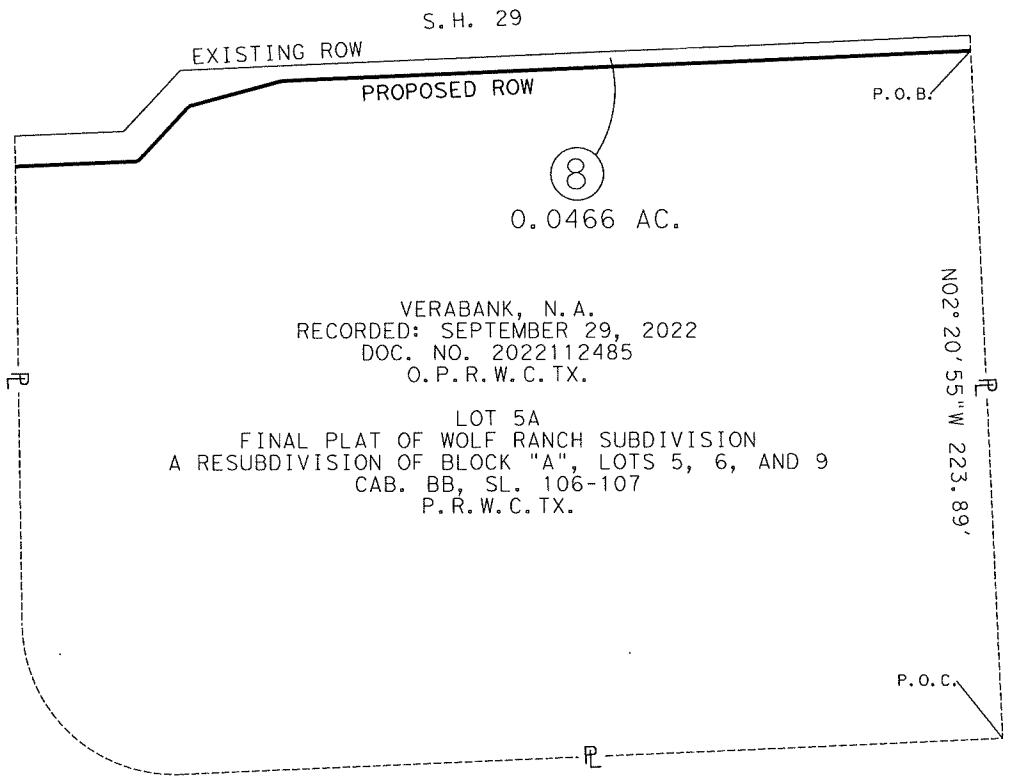

PARENT TRACT INSET
N.T.S.

NOTES:

1. ALL PROJECT COORDINATES AND BEARINGS ARE GRID NORTH BASED ON THE TEXAS COORDINATE SYSTEM, CENTRAL ZONE (4203), NAD 83 (2011), EPOCH 2010.0. ALL SURFACE COORDINATES SHOWN HEREON MAY BE CONVERTED TO GRID BY DIVIDING BY A SURFACE ADJUSTMENT FACTOR OF 1.00011. UNITS: U.S. SURVEY FEET. SURVEY DATE: AUGUST, 2023
2. THIS SURVEY WAS COMPLETED WITH THE BENEFIT OF TITLE REPORT, PROVIDED BY FIRST NATIONAL TITLE INSURANCE COMPANY, GF NO. 24-779543-GT, EFFECTIVE DATE JANUARY 18, 2024, AND ISSUED DATE JANUARY 25, 2024. THERE MAY BE EASEMENTS OR OTHER MATTERS, RECORDED OR UNRECORDED, THAT ARE NOT SHOWN.
3. A PROPERTY DESCRIPTION OF EVEN DATE WAS PREPARED IN CONJUNCTION WITH THIS PARCEL PLAT.

* AREA CALCULATED BY SAM, LLC.

I HEREBY CERTIFY THAT THIS SURVEY WAS MADE ON THE GROUND UNDER MY DIRECTION AND SUPERVISION AND THAT THIS PLAT IS TRUE AND CORRECT TO THE BEST OF MY KNOWLEDGE AND BELIEF.

STATE OF TEXAS
REGISTERED
SCOTT C. BRASHEAR
6660
PROFESSIONAL
LAND SURVEYOR

SCOTT C. BRASHEAR
REGISTERED PROFESSIONAL LAND SURVEYOR
NO. 6660, STATE OF TEXAS

4/5/2024
DATE

A

WPG WOLF RANCH, LLC
TRACT 2
DOC. NO. 2014044665
O.P.R.W.C.TX.

LOT 2A, BLOCK "A"
AMENDED PLAT OF LOT 2 AND LOT 8,
BLOCK "A" WOLF RANCH SUBDIVISION
CAB. AA, SL. 220-223
P.R.W.C.TX.

B

RARE HOSPITALITY INTERNATIONAL, INC.
DOC. NO. 2011087596
O.P.R.W.C.TX.

LOT 5C
FINAL PLAT OF WOLF RANCH SUBDIVISION
A RESUBDIVISION OF BLOCK "A",
LOTS 5, 6, AND 9
CAB. BB, SL. 106-107
P.R.W.C.TX.

PAGE 8 OF 8
REF. FIELD NOTE NO. 49643

FILE:\\saminc\AUS\PROJECTS\1019052245F\100\Survey\03Exhibits\Parcel 8\SH 29_Parcel 8.dgn

EXISTING	*1.622 AC.	ACQUIRE	0.0466 AC.	REMAINING	1.5754 AC. RIGHT

© 2024 ®

Texas Department of Transportation

SAM™

4801 Southwest Parkway
Building Two, Suite 100
Austin, Texas 78735
(512) 447-0575
Fax: (512) 326-3029
Texas Firm Registration No. 10064300

RIGHT-OF-WAY SKETCH
SHOWING PROPERTY OF
VERABANK, N.A.
PARCEL 8
0.0466 AC. (2,030 SQ. FT.)
CSJ NO. 0337-01-053

ELECTRONICALLY RECORDED
OFFICIAL PUBLIC RECORDS

2025080533

Pages: 11 Fee: $61.00
10/10/2025 02:33 PM
KOROURKE

Nancy E. Rister, County Clerk
Williamson County,Texas

PURCHASE AND SALE AGREEMENT

THIS PURCHASE AND SALE AGREEMENT (this "Agreement") is entered into this __ day of September 30, 2025 (the "Effective Date"), by and between the **CITY OF GEORGETOWN**, a Texas home-rule municipal corporation situated in Williamson County, Texas (the "City") and **CFT NV DEVELOPMENTS, LLC,** a Nevada limited liability company (formerly known as CFT Developments, LLC, a California limited liability company) ("Owner"). The City and Owner may be referred to herein individually as a "Party" or collectively as the "Parties".

WHEREAS, Owner owns fee title to a 0.692 acre parcel of land located in the C. Stubblefield Survey, Abstract No. 558, Williamson County, Texas, being a portion of Lot 5B, Final Plat of Wolf Ranch Subdivision, a Resubdivision of Block "A", Lots 5, 6, and 9, as recorded in Cabinet BB, Slides 106-107, Plat Records of Williamson County, Texas (the "Property");

WHEREAS, the City desires to acquire as right-of-way a 0.0151-acre (657 square feet) portion of the Property, such portion being more fully described and depicted in **Exhibit A** attached hereto and incorporated herein (the "Right-of-Way Area"), for the expansion of SH 29, University Avenue (the "Facility") as part of the City's SH 29 Road Expansion Project;

WHEREAS, the City and Owner are entering into this Agreement to set forth: (i) the rights and obligations of the City with respect to its acquisition of the Right-Of-Way Area and its use of the Right-of-Way Area; and (ii) in exchange for the City's agreements set forth in (i), the rights and obligations of Owner as to the conveyance of the Right-of-Way Area to the City; and

WHEREAS, this Agreement is authorized by and consistent with state law and the City's ordinances and regulations;

NOW, THEREFORE, in consideration of the foregoing recitals and the mutual covenants, promises and obligations by the Parties set forth in this Agreement, the Parties agree as follows:

ARTICLE I: PURCHASE AND SALE

A. AGREEMENTS: THE CITY OF GEORGETOWN

Subject to the terms herein set forth, the City hereby agrees as follows:

1. At a closing date and location to be determined by agreement of the Parties, upon delivery of a properly executed General Warranty Deed, hereinafter defined, the City shall pay to Owner an amount equal to TWENTY-NINE THOUSAND FIVE HUNDRED SIXTY-FIVE AND 00/100 DOLLARS ($29,565.00).

   The City, at its sole option and expense, may procure a Commitment to provide title insurance (a "Commitment") from a title company within ten (10) business days from the

Effective Date of this Agreement and shall promptly identify any objectionable matters of title therein.

2. The City will operate and maintain the Facility as part of its road system for a term deemed necessary by the City. Nothing herein shall be construed to limit or prohibit the City's ability to alter, remodel, rehabilitate, reconstruct, or decommission the Facility.

B. **AGREEMENTS: OWNER**

Subject to the terms herein set forth, Owner hereby agrees as follows:

1. Owner represents and warrants to the City that Owner is the sole owner in full and complete fee simple title of the Property.

2. Owner further represents and warrants to the City that:
   a. The Right-Of-Way Area is not subject to any liens or encumbrances.
   b. Owner has full and complete fee simple title to the Right-Of-Way Area, free and clear of all easements, restrictions, conditions, exceptions or reservations.
   c. There are no lawsuits pending or, to the best of Owner's knowledge, threatened, against or involving Owner or the Property.
   d. There is no pending or threatened claims, condemnations, planned public improvements, annexation, special assessments, zoning or subdivision changes, or other adverse claims affecting the Property.
   e. The Property has not been used as a land fill or for the storage or disposal of any hazardous or toxic materials.
   f. There are no third parties in possession of any portion of the Property as lessees, tenants at sufferance, or trespassers; there are no leases, licenses or other agreements relating to the use, occupancy or possession of the Property.
   g. The signatories to this Agreement have the authority to execute this Agreement on the terms herein set forth and to sell, grant and convey to the City the Right-Of-Way Area pursuant hereto.
   h. All representations herein set forth shall expressly survive the conveyance of the Right-Of-Way Area to the City.

3. For the consideration described herein, Owner will convey the Right-Of-Way Area to the City in the form attached hereto as **Exhibit B** and by this reference incorporated herein (the "General Warranty Deed").

ARTICLE II: CLOSING

Closing of the real estate transaction contemplated herein ("Closing") shall be held at Austin Title Company, 200 E 8th Street, Ste. 201, Georgetown, Texas 78626 (the "Title Company") at a time to be agreed upon by the Parties.

A. At Closing, Owner shall:

1. execute and deliver to the City the duly executed and acknowledged General Warranty Deed.

2. execute and deliver to the City any notices, statements, certificates, affidavits, releases and other documents required by this Agreement or the Title Company necessary for the Closing of the transaction;

3. pay all costs associated with the conveyance of the Right-Of-Way Area to the City that are not paid by the City, including (i) Owner's expenses, attorney fees, or broker fees; (ii) any taxes owed; and (iii) any fees required by a third-party to provide a notice, release, certificate, or other document necessary to clear an objectionable title matter; and

B. At Closing, the City shall:

1. pay the City's expenses;

2. pay all costs associated with the conveyance of the Right-Of-Way Area to the City, except (i) Owner's expenses, attorney fees, or broker fees; (ii) any taxes owed; and (iii) any fees required by a third-party to provide a notice, release, certificate, or other document necessary to clear an objectionable title matter; and

3. execute and deliver to Owner any notices, statements, certificates, affidavits, releases and other documents required by this Agreement or the Title Company necessary for the Closing of the conveyance.

ARTICLE III: GENERAL PROVISIONS

A. The term of this Agreement will commence upon the Effective Date and continue until recordation of the General Warranty Deed in the Official Public Records of Williamson County, Texas.

B. At the election and sole expense of the City, the City may obtain an Owner's Title Policy over the Right-Of-Way Area in an amount requested by the City, insuring the City's interest in the Right- Of-Way Area to be good and indefeasible, which policy shall be subject only to the Permitted Exceptions and the standard exceptions to title; provided that: (i) the Owner shall, upon request of City, provide an affidavit sufficient to remove from the policy the exception as to "the rights of parties in possession", and (ii) the City may elect to furnish a current on the ground survey and to pay the additional policy premium required to delete the "survey exception" from the policy, to the extent permitted by applicable title insurance rules.

C. In the event the City fails to fully and timely perform any of its obligations under this Agreement or fails to close for any reason except Owner's prior material default, Owner may, as its sole and exclusive remedy, terminate this Agreement.

D. In the event Owner fails to fully and timely perform any of its obligations under this Agreement or fails to close for any reason except the City's prior material default, the City may, as its sole

and exclusive remedy, terminate this Agreement.

E. The City is a political subdivision of the State of Texas, and that pursuant to Texas Tax Code Section 23.55(f) the conveyance of the Right-Of-Way Area to the City is for a public purpose and will not constitute a change in use that causes any rollback taxes to become due.

F. This Agreement may be modified, amended or terminated as to all or any part of the Property upon the written mutual consent of the Parties.

G. This Agreement shall be construed under and in accordance with the laws of the State of Texas.

H. This Agreement shall be binding upon and inure to the benefit of the Parties and their respective heirs, executors, administrators, legal representatives, successors, and assigns, except as otherwise expressly provided herein.

I. In case any one or more of the provisions contained in this Agreement shall for any reason be held to be invalid, illegal, or unenforceable in any respect, such invalidity, illegality, or unenforceability shall not affect any other provisions thereof, and this Agreement shall be construed as if such invalid, illegal, or unenforceable provision had never been contained herein to the extent such change does not alter the intent of the Agreement.

J. This Agreement supersedes any and all other agreements, either oral or in writing, between the Parties with respect to the subject matter hereof and contains all of the covenants and agreements between the Parties with respect to the subject matter hereof. Each Party acknowledges that no representations, inducements, promises, or agreements, orally or otherwise, have been made by any Party, or anyone acting on behalf of any Party, that are not set forth in this Agreement, and that no agreement, statement, or promise not contained in this Agreement shall be valid or binding.

K. Each Party acknowledges that it has read and understands the effect of this Agreement and executes this Agreement of its own free will and accord for the purposes and considerations set forth herein.

L. It is further understood and expressly agreed that this Agreement was drafted jointly by the Parties, and it is expressly agreed that neither this Agreement nor any of the documents executed in connection with this Agreement shall ever be construed against any Party on the basis of who drafted the documents.

M. Each Party shall do all other acts, or deliver any other instruments or documents required or helpful to be done or delivered, in order to consummate the transaction contemplated hereby.

N. Time is of the essence of this Agreement and each and every provision hereof.

O. Any notice, demand, direction, request, or other instrument authorized or required by this Agreement to be given to or filed with either Party (collectively, "Notice") shall be deemed to have been sufficiently given or filed for all purposes if and when personally delivered or sent

by certified mail, postage prepaid, return receipt requested, to the address specified below or at such other address as may be designated in writing by the Parties:

Owner: CFT NV Developments, LLC,
a Nevada limited liability company
1683 Walnut Grove Ave.,
Rosemead, CA 91770

City: City of Georgetown
Attn: City Manager
P.O. Box 409
Georgetown, TX 78627

For overnight mail or personal delivery:

808 Martin Luther King, Jr. Street
Georgetown, TX 78626

P. Exhibits:
1. Exhibit A – Right-Of-Way Area Survey
2. Exhibit B – General Warranty Deed

Q. Each Party represents and warrants to the other Party that it has the full right, power, and authority to enter into and perform its obligations under this Agreement. This Agreement was authorized by the City Council of the City of Georgetown, Texas, on July 23, 2024, as indicated by signature of the City's representatives to this Agreement.

R. In the event either Party fails to fully and timely perform any of its obligations under this Agreement or fails to close for any reason except the other Party's prior material default, the other Party may, as its sole and exclusive remedy, terminate this Agreement.

[signature pages follow]

This Agreement is executed by the Parties to be effective as of the Effective Date, and may be executed in multiple counterparts, each of which shall be considered an original.

OWNER:

CFT NV Developments, LLC,
a Nevada limited liability company

APPROVED AS TO FORM
BY _____

By: _____

Name: Henry Wong

Title: Manager

ACKNOWLEDGMENT

THE STATE OF _____ §
§
COUNTY OF _____ §

This instrument was acknowledged before me on this, the __day of _____, 2025, by _____, the (title) _____ of CFT NV Developments, LLC, a Nevada limited liability company, on behalf of said limited liability company.

Please See Attached

_____
Notary Public, State of _____

CALIFORNIA ALL- PURPOSE CERTIFICATE OF ACKNOWLEDGMENT

A notary public or other officer completing this certificate verifies only the identity of the individual who signed the document to which this certificate is attached, and not the truthfulness, accuracy, or validity of that document.

State of California }

County of Los Angeles }

On September 30, 2025 before me, Christian Alexander Galeana (Notary Public),
(Here insert name and title of the officer)

personally appeared Mecky Wong,
who proved to me on the basis of satisfactory evidence to be the person(s) whose name(s) is/are subscribed to the within instrument and acknowledged to me that he/she/they executed the same in his/her/their authorized capacity(ies), and that by his/her/their signature(s) on the instrument the person(s), or the entity upon behalf of which the person(s) acted, executed the instrument.

I certify under PENALTY OF PERJURY under the laws of the State of California that the foregoing paragraph is true and correct.

WITNESS my hand and official seal.

Notary Public Signature (Notary Public Seal)

CHRISTIAN ALEXANDER GALEANA
Notary Public - California
Los Angeles County
Commission # 2422942
My Comm. Expires Oct 23, 2026

ADDITIONAL OPTIONAL INFORMATION

DESCRIPTION OF THE ATTACHED DOCUMENT

(Title or description of attached document)

(Title or description of attached document continued)

Number of Pages _____ Document Date_____

CAPACITY CLAIMED BY THE SIGNER

- ☐ Individual (s)
- ☐ Corporate Officer

(Title)

- ☐ Partner(s)
- ☐ Attorney-in-Fact
- ☐ Trustee(s)
- ☐ Other _____

2015 Version www NotaryClasses.com 800-873-9865

INSTRUCTIONS FOR COMPLETING THIS FORM

This form complies with current California statutes regarding notary wording and, if needed, should be completed and attached to the document. Acknowledgments from other states may be completed for documents being sent to that state so long as the wording does not require the California notary to violate California notary law.

- State and County information must be the State and County where the document signer(s) personally appeared before the notary public for acknowledgment.
- Date of notarization must be the date that the signer(s) personally appeared which must also be the same date the acknowledgment is completed.
- The notary public must print his or her name as it appears within his or her commission followed by a comma and then your title (notary public).
- Print the name(s) of document signer(s) who personally appear at the time of notarization.
- Indicate the correct singular or plural forms by crossing off incorrect forms (i.e. ~~he~~/she/~~they,~~ is /~~are~~) or circling the correct forms. Failure to correctly indicate this information may lead to rejection of document recording.
- The notary seal impression must be clear and photographically reproducible. Impression must not cover text or lines. If seal impression smudges, re-seal if a sufficient area permits, otherwise complete a different acknowledgment form.
- Signature of the notary public must match the signature on file with the office of the county clerk.
  - ❖ Additional information is not required but could help to ensure this acknowledgment is not misused or attached to a different document.
  - ❖ Indicate title or type of attached document, number of pages and date.
  - ❖ Indicate the capacity claimed by the signer. If the claimed capacity is a corporate officer, indicate the title (i.e. CEO, CFO, Secretary).
- Securely attach this document to the signed document with a staple

CITY OF GEORGETOWN,
a Texas home-rule municipal corporation

By: _____
David Morgan, City Manager

ACKNOWLEDGMENT

THE STATE OF TEXAS §
§
COUNTY OF WILLIAMSON §

This instrument was acknowledged before me on this 2nd day of March 2026, by David Morgan, as the City Manager of the City of Georgetown, a Texas home-rule municipal corporation, on behalf of said corporation.

Shannon Biddle
My Commission Expires
9/26/2026
Notary ID 133982902

_____
Notary Public, State of Texas

APPROVED AS TO FORM:

By: _____
Andrew Culpepper, Assistant City Attorney

NOTICE OF AWARD OF SPECIAL COMMISSIONERS

The State of Texas County of Williamson

Kristina W Silcocks
Phelps Dunbar LLP
3600 N Capitol of Texas
Highway Suite B300
Austin TX 78746

Certified Mail # 7022-2410-0000-8054-2498

Pursuant to Property Code Art. 21.049, attached herein is a certified copy of the Award of Special Commissioners in Cause No.25-0483-CC1; THE CITY OF GEORGETOWN, TEXAS vs. RARE HOSPITALITY INTERNATIONAL INC., D/B/A LONGHORN STEAKHOUSE, ET AL in the County Court at Law #1 of Williamson County, Texas. The Award was signed by Judge Brandy Hallford and filed on the 18th day of June, 2025.

Issued and given under my hand and the seal of said Court at office in Georgetown, Texas, on this the 18th day of June, 2025.

COUNTY COURT AT LAW NO. 1 WILLIAMSON COUNTY, TEXAS

NANCY E. RISTER, County Clerk
Williamson County, Texas

By: *Julia Asher,* Deputy

Docusign Envelope ID: 355DF73D-1094-4E8F-8796-37ABDEE9F378

PROJECT: SH29
PARCEL: 10

CAUSE NO. 25-0483-CC1

THE CITY OF GEORGETOWN, TEXAS Plaintiff, vs. RARE HOSPITALITY INTERNATIONAL, INC., D/B/A LONGHORN STEAKHOUSE, ET AL. Defendants.	CONDEMNATION PROCEEDING FILED IN THE COUNTY COURT AT LAW NO. 1 WILLIAMSON COUNTY, TEXAS

AWARD OF SPECIAL COMMISSIONERS

On the 17th day of June, 2025, in Williamson County, Texas, the above-styled proceeding came on to be heard before the undersigned Special Commissioners, three disinterested freeholders in Williamson County, Texas, appointed as Special Commissioners by the Judge of County Court at Law No. 1, Williamson County, Texas to assess the compensation and damages, if any, caused by these proceedings, and came Plaintiff, City of Georgetown, Texas, a municipal corporation, located in Williamson County, Texas, represented by Kristina W. Silcocks of Phelps Dunbar LLP, and the Defendants, RARE Hospitality International, Inc., a Georgia corporation, d/b/a Longhorn Steakhouse, SPG Wolf Ranch, L.P., and WPG Wolf Ranch, LLC. The Special Commissioners made the following findings:

I.

That on the 26th day of March, 2025, Plaintiff filed an Original Petition for Condemnation in the County Court at Law No. 1 of Williamson County Texas; wherein, upon the facts and for the purposes therein stated, Plaintiff, through the duly elected City Council for the City of Georgetown, Texas, duly incorporated, organized and existing under and by virtue of its charter adopted by the electorate pursuant to Article XI, Section 5 of the Texas Constitution, is vested with the power and authority to

CERTIFIED TO BE A TRUE AND CORRECT COPY
NANCY E. RISTER, County Clerk
Williamson County
Page 1 of 3

Docusign Envelope ID: 355DF73D-1094-4E8F-8796-37ABDEE9F378

appropriate private property for public use and purposes by condemnation proceedings and to exercise all the powers of eminent domain under Section 251.001 of the Texas Local Government Code, has determined that it is necessary to acquire fee simple interests in said Property, and Plaintiff seeks to acquire and condemn the Property and interests described below, with such Property vesting in the City of Georgetown, Texas, to wit:

Parcel 10:
A 0.0284 ACRE (1,239 SQ. FT.) PARCEL OF LAND LOCATED IN THE C. STUBBLEFIELD SURVEY, ABSTRACT NO. 558, WILLIAMSON COUNTY, TEXAS, BEING A PORTION OF LOT 5C, FINAL PLAT OF WOLF RANCH SUBDIVISION, A RESUBDIVISION OF BLOCK "A", LOTS 5, 6, AND 9, AS RECORDED IN CABINET BB, SLIDES 106-107, PLAT RECORDS OF WILLIAMSON COUNTY, TEXAS, DESCRIBED IN A DEED TO RARE HOSPITALITY INTERNATIONAL, INC., RECORDED DECEMBER 28, 2011, IN DOCUMENT NO. 2011087596, OFFICIAL PUBLIC RECORDS OF WILLIAMSON COUNTY, TEXAS; SAID 0.0284 ACRE (1,239 SQ. FT.) TRACT OF LAND BEING MORE PARTICULARLY DESCRIBED BY METES AND BOUNDS IN EXHIBIT "A" ATTACHED HERETO AND MADE A PART HEREOF FOR ALL PURPOSES (HEREINAFTER REFERRED TO AS THE "PROPERTY".)

II.

That upon consideration of the Petition for Condemnation filed by Plaintiff, the Judge of County Court at Law No. 1, Williamson County, Texas, did on March 27, 2025, appoint Randall Pick, Charles Parker, and Merlin Lester, three disinterested real property owners who reside in Williamson County, Texas, as Special Commissioners to assess compensation and damages, if any, caused by the taking of said property. The Special Commissioners did on May 21, 2025, sign the Order Setting Hearing Before Special Commissioners, setting the Hearing for the 17th day of June, 2025 at 10:00 a.m. at the Georgetown Public Library, Friends Room, 402 W. 8th Street, Georgetown, Texas 78626. Thereafter, each Special Commissioner took the oath prescribed by law, which oaths are on file with the papers in this cause.

CERTIFIED TO BE A TRUE AND CORRECT COPY
NANCY E. RISTER, County Clerk
Williamson County
Page 2 of 13

Docusign Envelope ID: 355DF73D-1094-4E8F-8796-37ABDEE9F378

III.

On the 17th day of June, 2025, said Special Commissioners did convene, and the following named parties appeared in person, or by their attorneys: Plaintiff, City of Georgetown, Texas, represented by Kristina W. Silcocks. Defendants did not appear.

The Special Commissioners proceeded to hear evidence on the compensation owed to Defendants for the property condemned and damages to the remainder, if any, by reason of the condemnation of the property. After hearing and considering such evidence, and pursuant to a settlement agreement between the parties, the Special Commissioners did find and determine and accordingly assess total compensation to be paid by the City of Georgetown, Texas, to Defendants for this condemnation according to the Section 21.042 of the Texas Property Code, in the total amount of: **THIRTY-SEVEN THOUSAND ONE HUNDRED NINETY-NINE DOLLARS AND NO/100 ($37,199.00)**, to be paid jointly to Defendants: RARE Hospitality International, Inc., a Georgia corporation, d/b/a Longhorn Steakhouse, SPG Wolf Ranch, L.P., and WPG Wolf Ranch, LLC.

RENDERED this the 17th day of June, 2025.

Signed by:
E9C51CCB3F264B9...
RANDALL PICK

Signed by:
BE62E01A358A4C7...
CHARLES PARKER

DocuSigned by:
FC5020740C8AA42B...
MERLIN LESTER

SPECIAL COMMISSIONERS

CERTIFIED TO BE A TRUE AND CORRECT COPY
NANCY E. RISTER, County Clerk
Williamson County
Page 3 of 13

Docusign Envelope ID: 355DF73D-1094-4E8F-8796-37ABDEE9F378

The following costs have accrued to date as fees for the Special Commissioner:

$ 350.00	to	Randall Pick	4	hours
$ 350.00	to	Charles Parker	4	hours
$ 350.00	to	Merlin Lester	4	hours

The Clerk of this Court is hereby ORDERED to notify all parties or their attorneys of record, as listed in Exhibit "B" attached hereto, of the filing date of this Award by certified mail, return receipt requested, at their addresses of record pursuant to SECTION 21.049, TEXAS PROPERTY CODE.

The foregoing Award of Special Commissioners was filed with me on this the ___ day of _____, 2025.

6/18/2025 1:45:03 PM

Judge, County Court at Law No. 1, Williamson County, Texas

Filed: June 18, 2025 2:04:26 PM
Nancy E. Rister, County Clerk
Williamson County, Texas
By: Asher, Julia
Deputy Clerk

CERTIFIED TO BE A TRUE AND CORRECT COPY
NANCY E. RISTER, County Clerk
Williamson County
Page 4 of 13

Docusign Envelope ID: 355DF73D-1094-4E8F-8796-37ABDEE9F378

EXHIBIT "A"

County: Williamson
Highway: S.H. 29
Limits: From 0.161 Miles West of Wolf Ranch Parkway To I.H. 35
CCSJ: 0337-01-053
Parcel No.: 10

April 5, 2024

PROPERTY DESCRIPTION FOR PARCEL 10

DESCRIPTION OF A 0.0284 ACRE (1,239 SQ. FT.) PARCEL OF LAND LOCATED IN THE C. STUBBLEFIELD SURVEY, ABSTRACT NO. 558, WILLIAMSON COUNTY, TEXAS, BEING A PORTION OF LOT 5C, FINAL PLAT OF WOLF RANCH SUBDIVISION, A RESUBDIVISION OF BLOCK "A", LOTS 5, 6, AND 9, AS RECORDED IN CABINET BB, SLIDES 106-107, PLAT RECORDS OF WILLIAMSON COUNTY, TEXAS (P.R.W.C.TX.), DESCRIBED IN A DEED TO RARE HOSPITALITY INTERNATIONAL, INC., RECORDED DECEMBER 28, 2011 IN DOCUMENT NO. 2011087596, OFFICIAL PUBLIC RECORDS OF WILLIAMSON COUNTY, TEXAS (O.P.R.W.C.TX.); SAID 0.0284 ACRE (1,239 SQ. FT.) PARCEL, AS SHOWN ON A PLAT PREPARED BY SAM, LLC, BEING MORE PARTICULARLY DESCRIBED BY METES AND BOUNDS AS FOLLOWS:

COMMENCING at a mag nail with a shiner stamped "Chaparral Boundary" found 306.39 feet right of State Highway (S.H.) 29 Engineer's Centerline Station (E.C.S.) 181+33.67 on the west line of Lot 9A, Final Plat of Wolf Ranch Subdivision, a Resubdivision of Block "A", Lots 5, 6, and 9, as recorded in Cabinet BB, Slides 106-107, P.R.W.C.TX., described in a deed as Tract 4 to WPG Wolf Ranch, LLC, recorded in Document No. 2014044665, O.P.R.W.C.TX., for the northeast corner of Lot 2A, Block "A", Amended Plat of Lot 2 and Lot 8, Block "A", Wolf Ranch Subdivision, as recorded in Cabinet AA, Slides 220-223, P.R.W.C.TX., described in a deed as Tract 2 to WPG Wolf Ranch, LLC, recorded in Document No. 2014044665, O.P.R.W.C.TX., same being the southeast corner of said Lot 5C;

THENCE, North 02°14'47" West, departing the north line of said Lot 2A, with the west line of said Lot 9A and the east line of said Lot 5C, passing at a distance of 227.39 feet a calculated point on the existing south right-of-way line of S.H. 29, a variable width right-of-way, as described to the State of Texas in Document No. 2006006974, O.P.R.W.C.TX., and as depicted in TXDOT R.O.W. Strip Map CSJ No. 0337-01-023, for the northwest corner of said Lot 9A, from which a 5/8-inch iron rod with a yellow plastic cap stamped "M. FELDBUSCH TX LS 5213" found bears, North 86°24'43" West, a distance of 0.37 feet, and continuing along the east line of said Lot 5C, with the existing south right-of-way line of said S.H. 29, a distance of 5.00 feet, for a **total distance of 232.39 feet**, to a "Texas Department of Transportation (TXDOT)" Type II bronze disk set in concrete (Surface Coordinates: N=10,204,868.52, E=3,127,059.84) 74.00 feet right of S.H. 29 E.C.S. 181+34.08 on the proposed south right-of-way line of S.H. 29, for the southeast corner and **POINT OF BEGINNING** of the parcel described herein;

1) **THENCE, South 87°39'07" West**, departing the east line of said Lot 5C and the existing south right-of-way line of said S.H. 29, with the proposed south right-of-way line of said S.H. 29, over and across said Lot 5C, a distance of **247.71 feet** to a 5/8-inch iron rod with a 2-inch aluminum cap stamped TXDOT set ** 74.00 feet right of S.H. 29 E.C.S 178+86.37 on the west line of said Lot 5C and the east line of Lot 5B, Final Plat of Wolf Ranch Subdivision, a Resubdivision of Block "A", Lots 5, 6, and 9, as recorded in Cabinet BB, Slides 106-107, P.R.W.C.TX., described in a deed to CFT Developments, LLC, recorded in Document No. 2006000695, O.P.R.W.C.TX., for the southwest corner of the parcel described herein;

2) **THENCE, North 02°20'55" West**, departing the proposed south right-of-way line of said S.H. 29, with the common line of said Lot 5C and said Lot 5B, a distance of **5.00 feet** to a calculated point on the existing south right-of-way line of S.H. 29, a variable width right-of-way, as dedicated per plat recorded in Cabinet Y, Slides 112-115, P.R.W.C.TX., and as depicted in TXDOT R.O.W. Strip Map CSJ No. 0337-01-023, for the northeast corner of said Lot 5B, same being the northwest corner of said Lot 5C and of the parcel described herein;

3) **THENCE, North 87°39'07" East**, departing the common line of said Lot 5C and said Lot 5B, with the existing south right-of-way line of said S.H. 29, a distance of **247.72 feet** to a calculated point, for the northeast corner of said Lot 5C and of the parcel described herein, from which a 1/2-inch iron rod with a yellow plastic cap stamped "Bury & Partners" found bears, North 27°01'13" West, a distance of 0.77 feet;

CERTIFIED TO BE A TRUE AND CORRECT COPY
NANCY E. RISTER, County Clerk
Williamson County
Page 5 of 13

Doçusign Envelope ID: 355DF73D-1094-4E8F-8796-37ABDEE9F378

EXHIBIT "A"

County: Williamson
Highway: S.H. 29
Limits: From 0.161 Miles West of Wolf Ranch Parkway To I.H. 35
CCSJ: 0337-01-053
Parcel No.: 10

4) **THENCE, South 02°14'47" East**, continuing along the existing south right-of-way line of said S.H. 29, with the east line of said Lot 5C, a distance of **5.00 feet** to the **POINT OF BEGINNING**, and containing 0.0284 acres (1,239 sq. ft.) of land.

Bearing Basis:
All bearings shown are based on NAD83/2011 Texas Coordinate System, Central Zone (4203). All distances shown are surface and may be converted to grid by dividing by a Surface Adjustment Factor of 1.00011. All coordinates shown are in surface and may be converted by dividing by the same factor. Project units are in U.S. Survey Feet.

** - Unable to be set at the time of survey.

THE STATE OF TEXAS §
§ KNOW ALL MEN BY THESE PRESENTS:
COUNTY OF TRAVIS §

That I, Scott C. Brashear, a Registered Professional Land Surveyor, do hereby certify that the above description is true and correct to the best of my knowledge and belief and that the property described herein was determined by a survey made on the ground under my direction and supervision.

WITNESS MY HAND AND SEAL at Austin, Travis County, Texas, on the date shown below.

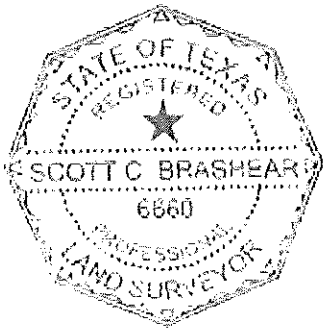

Scott C. Brashear 4/5/2024
Scott C. Brashear Date
Registered Professional Land Surveyor
No. 6660 – State of Texas

SURVEYING AND MAPPING, LLC
4801 Southwest Pkwy
Building Two, Suite 100
Austin, Texas 78735
TX. Firm No. 10064300

CERTIFIED TO BE A TRUE AND CORRECT COPY
NANCY E. RISTER, County Clerk
Williamson County
Page 6 of 13

FN 49640

SAM Job No. 52245F

Docusign Envelope ID: 355DF73D-1094-4E8F-8796-37ABDEE9F378

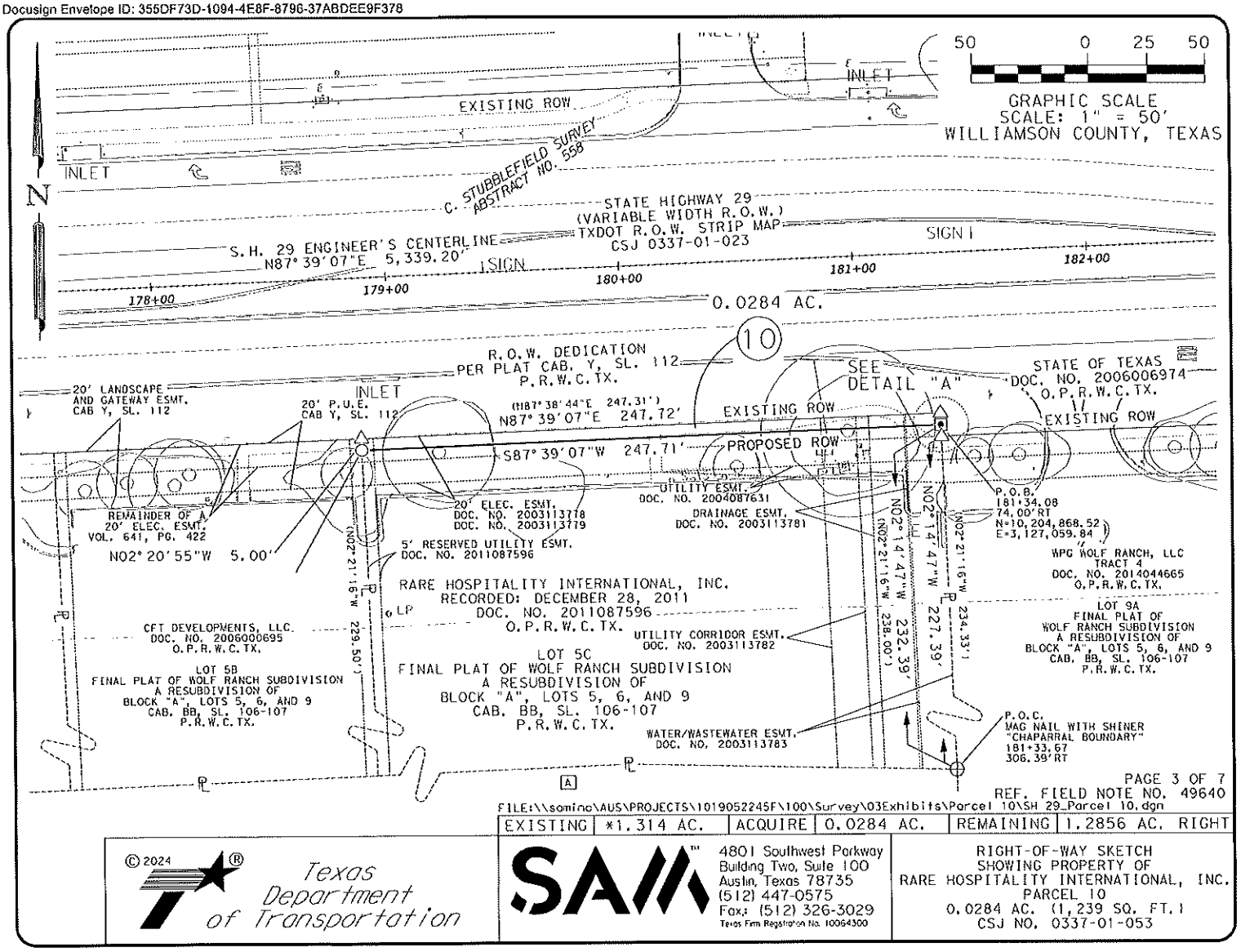

PAGE 3 OF 7
REF. FIELD NOTE NO. 49640

FILE:\\somino\AUS\PROJECTS\1019052245F\100\Survey\03Exhibits\Parcel 10\SH 29_Parcel 10.dgn

EXISTING	±1.314 AC.	ACQUIRE	0.0284 AC.	REMAINING	1.2856 AC.	RIGHT

© 2024

Texas Department of Transportation

SAM™
4801 Southwest Parkway
Building Two, Suite 100
Austin, Texas 78735
(512) 447-0575
Fax: (512) 326-3029
Texas Firm Registration No. 10064300

RIGHT-OF-WAY SKETCH
SHOWING PROPERTY OF
RARE HOSPITALITY INTERNATIONAL, INC.
PARCEL 10
0.0284 AC. (1,239 SQ. FT.)
CSJ NO. 0337-01-053

CERTIFIED TO BE A TRUE AND CORRECT COPY
NANCY E. RISTER, County Clerk
Williamson County

Docusign Envelope ID: 355DF73D-1094-4E8F-8796-37ABDEE9F378

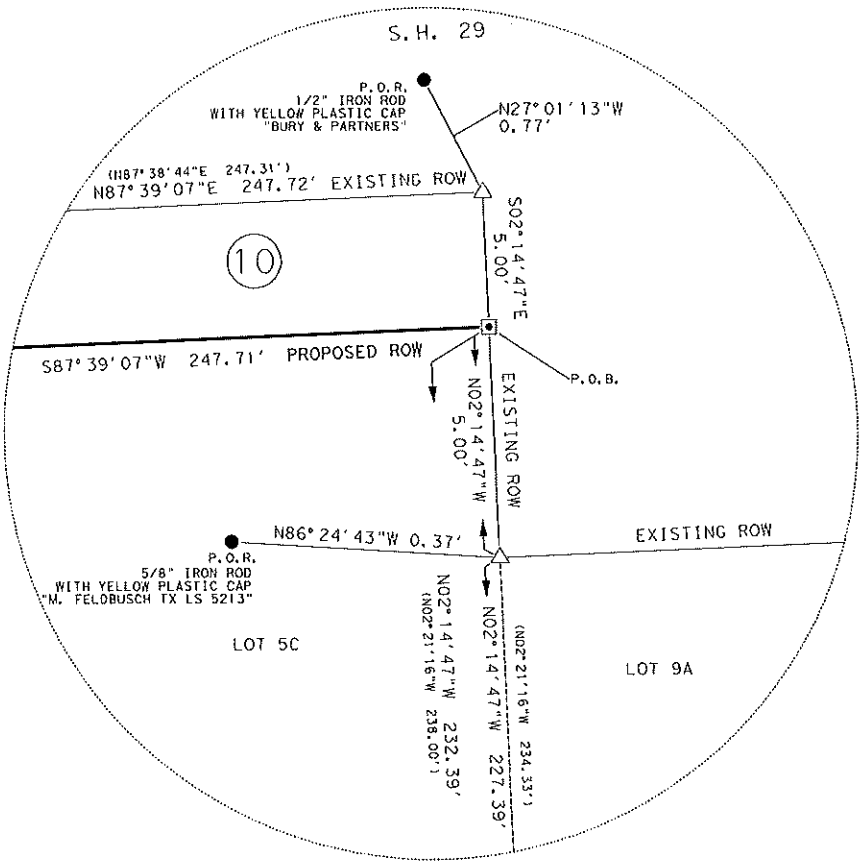

DETAIL "A"
NOT TO SCALE

REF. FIELD NOTE NO. 49640
FILE:\\samfnc\AUS\PROJECTS\1019052245F\100\Survey\03Exhibits\Parcel 10\SH 29_Parcel 10.dgn

EXISTING	×1.314 AC.	ACQUIRE	0.0284 AC.	REMAINING	1.2856 AC. RIGHT

© 2024
Texas Department of Transportation

SAM
4801 Southwest Parkway
Building Two, Suite 100
Austin, Texas 78735
(512) 447-0575
Fax: (512) 326-3029
Texas Firm Registration No. 10064300

RIGHT-OF-WAY SKETCH
SHOWING PROPERTY OF
RARE HOSPITALITY INTERNATIONAL, INC.
PARCEL 10
0.0284 AC. (1,239 SQ. FT.)
CSJ NO. 0337-01-053

CERTIFIED TO BE A TRUE AND CORRECT COPY
NANCY E. RISTER, County Clerk
Williamson County
Page 8 of 13

Docusign Envelope ID: 355DF73D-1094-4E8F-8796-37ABDEE9F378

SCHEDULE B:

THIS SURVEY HEREON WAS PREPARED IN CONJUCTION WITH THAT COMMITMENT FOR TITLE INSURANCE OF NO. 24-779562-GT, ISSUED BY FIRST NATIONAL TITLE INSURANCE COMPANY, EFFECTIVE DATE JANUARY 18, 2024, AND ISSUED DATE JANUARY 26, 2024.

10. THE FOLLOWING MATTERS AND ALL TERMS OF THE DOCUMENTS CREATING OR OFFERING EVIDENCE OF THE MATTERS (WE MUST INSERT MATTERS OR DELETE THIS EXCEPTION.):

A. ALL LEASES, GRANTS, EXCEPTIONS OR RESERVATIONS OF COAL, LIGNITE, OIL, GAS AND OTHER MINERALS, TOGETHER WITH ALL RIGHTS, PRIVILEGES AND IMMUNITIES RELATING THERETO, APPEARING IN THE PUBLIC RECORDS WHETHER LISTED IN SCHEDULE B OR NOT. THERE MAY BE LEASES, GRANTS, EXCEPTIONS OR RESERVATIONS OF MINERAL INTEREST THAT ARE NOT LISTED.

B. ALL LEASES, GRANTS, EXCEPTIONS OR RESERVATIONS OF THE GEOTHERMAL ENERGY AND ASSOCIATED RESOURCES BELOW THE SURFACE OF THE LAND, TOGETHER WITH ALL RIGHTS, PRIVILEGES, AND IMMUNITIES RELATING THERETO, APPEARING IN THE PUBLIC RECORDS WHETHER LISTED IN SCHEDULE B OR NOT. THERE MAY BE LEASES, GRANTS, EXCEPTIONS OR RESERVATIONS OF THE GEOTHERMAL ENERGY AND ASSOCIATED RESOURCES BELOW THE SURFACE OF THE LAND THAT ARE NOT LISTED.

C. ALL VISIBLE AND APPARENT EASEMENTS OR USES AND ALL UNDERGROUND EASEMENTS OR USES, THE EXISTENCE OF WHICH MAY ARISE BY UNRECORDED GRANT OR BY USE.

D. RIGHTS OF PARTIES IN POSSESSION.

E. RIGHTS OF TENANTS, AS TENANTS ONLY, UNDER UNRECORDED LEASES OR RENTAL AGREEMENTS.

F. RIGHTS OF THE PUBLIC, THE STATE OF TEXAS AND THE MUNICIPALITY IN AND TO THAT PORTION OF SUBJECT PROPERTY, IF ANY, LYING WITHIN THE BOUNDARIES OF ANY ROADWAY, PUBLIC OR PRIVATE.

G. ANY AND ALL MATTERS WHICH WOULD BE SHOWN ON A CURRENT, CORRECT SURVEY OF THE PROPERTY.

H. EASEMENT(S) AND/OR BUILDING LINE(S) AFFECTING THE SUBJECT PROPERTY AS SHOWN ON MAP OR PLAT RECORDED IN CABINET BB, SLIDE 106, MAP OR PLAT RECORDS, WILLIAMSON COUNTY, TEXAS. (AFFECTS PARCEL AS SHOWN)

I. EASEMENT BY AND BETWEEN JAY L. WOLF, TO TEXAS POWER & LIGHT COMPANY, OF DALLAS TEXAS, DATED NOVEMBER 12, 1963, AND RECORDED APRIL 6, 1967, IN/UNDER VOLUME 467, PAGE 400, OF THE REAL PROPERTY RECORDS OF WILLIAMSON COUNTY, TEXAS. (DOES NOT AFFECT PARCEL)

J. RIGHT OF WAY AND EASEMENT BY AND BETWEEN JAY L. WOLF AND WIFE, BETTY WOLF, TO THE CITY OF GEORGETOWN, DATED APRIL 28, 1976, AND RECORDED JULY 22, 1976, IN/UNDER VOLUME 641, PAGE 422, OF THE REAL PROPERTY RECORDS OF WILLIAMSON COUNTY, TEXAS. (DOES NOT AFFECT PARCEL)

K. UTILITY EASEMENT BY AND BETWEEN JAY L. WOLF, TO THE CITY OF GEORGETOWN, DATED APRIL 6, 1995, RECORDED IN/UNDER VOLUME 2715, PAGE 107, OF THE REAL PROPERTY RECORDS OF WILLIAMSON COUNTY, TEXAS. (DOES NOT AFFECT PARCEL)

L. TERMS, CONDITIONS AND STIPULATIONS CONTAINED IN THAT CERTAIN DEVELOPMENT AGREEMENT RECORDED IN CLERK'S FILE NO. 2003089648, RE-RECORDED IN CLERK'S FILE NO. 2003119077, REAL PROPERTY RECORDS OF WILLIAMSON COUNTY, TEXAS, BEING FURTHER AFFECTED BY CLERK'S FILE NOS. 2004049241 AND 2006051008, REAL PROPERTY RECORDS OF WILLIAMSON COUNTY, TEXAS REFERENCE IS HEREBY MADE TO SAID DOCUMENT FOR FULL PARTICULARS. (MAY AFFECT PARCEL)

M. ELECTRIC EASEMENT BY AND BETWEEN SPG WOLF RANCH, L.P., A TEXAS LIMITED PARTNERSHIP, TO THE CITY OF GEORGETOWN, DATED NOVEMBER 20, 2003, AND RECORDED NOVEMBER 24, 2003, IN/UNDER COUNTY CLERK'S FILE NUMBER 2003113778, OF THE REAL PROPERTY RECORDS OF WILLIAMSON COUNTY, TEXAS. (AFFECTS PARCEL AS SHOWN)

N. ELECTRIC EASEMENT BY AND BETWEEN SPG WOLF RANCH, L.P., A TEXAS LIMITED PARTNERSHIP, TO THE CITY OF GEORGETOWN, A MUNICIPALITY, DATED NOVEMBER 20, 2003, AND RECORDED NOVEMBER 24, 2003, IN/UNDER COUNTY CLERK'S FILE NUMBER 2003113779, OF THE REAL PROPERTY RECORDS OF WILLIAMSON COUNTY, TEXAS. (AFFECTS PARCEL AS SHOWN)

O. DRAINAGE EASEMENT BY AND BETWEEN SPG WOLF RANCH, L.P., A TEXAS LIMITED PARTNERSHIP, TO THE CITY OF GEORGETOWN, A MUNICIPALITY, DATED NOVEMBER 20, 2003, AND RECORDED NOVEMBER 24, 2003, IN/UNDER COUNTY CLERK'S FILE NUMBER 2003113780, OF THE REAL PROPERTY RECORDS OF WILLIAMSON COUNTY, TEXAS. (DOES NOT AFFECT PARCEL)

P. UTILITY CORRIDOR EASEMENT BY AND BETWEEN SPG WOLF RANCH, L.P., A TEXAS LIMITED PARTNERSHIP, TO THE CITY OF GEORGETOWN, A MUNICIPALITY, DATED NOVEMBER 20, 2003, AND RECORDED NOVEMBER 24, 2003, IN/UNDER COUNTY CLERK'S FILE NUMBER 2003113782, OF THE REAL PROPERTY RECORDS OF WILLIAMSON COUNTY, TEXAS. (AFFECTS PARCEL AS SHOWN)

Q. WATER/WASTEWATER EASEMENT BY AND BETWEEN SPG WOLF RANCH, L.P., A TEXAS LIMITED PARTNERSHIP, TO THE CITY OF GEORGETOWN, A MUNICIPALITY, DATED NOVEMBER 20, 2003, FILED NOVEMBER 24, 2003, RECORDED IN/UNDER COUNTY CLERK'S FILE NUMBER 2003113783, OF THE REAL PROPERTY RECORDS OF WILLIAMSON COUNTY, TEXAS. (AFFECTS PARCEL AS SHOWN)

R. EASEMENTS, TERMS, CONDITIONS AND STIPULATIONS CONTAINED IN THAT CERTAIN OPERATION AND EASEMENT AGREEMENT RECORDED IN CLERK'S FILE NO. 2003124160, REAL PROPERTY RECORDS OF WILLIAMSON COUNTY, TEXAS, BEING FURTHER AFFECTED BY CLERK'S FILE NOS. 2007096288, 2011087599, AND 2014079108, REAL PROPERTY RECORDS OF WILLIAMSON COUNTY, TEXAS REFERENCE IS HEREBY MADE TO SAID DOCUMENT FOR FULL PARTICULARS. (MAY AFFECT PARCEL)

S. EDWARDS AQUIFER PROTECTION PLAN APPROVAL ATTACHED TO DEED RECORDATION AFFIDAVIT BY SPG WOLF RANCH, LP, A TEXAS LIMITED LIABILITY PARTNERSHIP, DATED FEBRUARY 20, 2004 AND RECORDED FEBRUARY 23, 2004 IN CLERK'S FILE NO. 2004013553, OF THE REAL PROPERTY RECORDS OF WILLIAMSON COUNTY, TEXAS. (MAY AFFECT PARCEL)

T. MEMORANDUM OF SUPPLEMENTAL AGREEMENT RECORDED IN CLERK'S FILE NO. 2004073657, REAL PROPERTY RECORDS OF WILLIAMSON COUNTY, TEXAS REFERENCE IS HEREBY MADE TO SAID DOCUMENT FOR FULL PARTICULARS. (DOES NOT AFFECT PARCEL)

U. EASEMENT(S) FOR THE PURPOSE(S) SHOWN BELOW AND RIGHTS INCIDENTAL THERETO, AS GRANTED IN A DOCUMENT TO CITY OF GEORGETOWN RECORDED IN CLERK'S FILE NO. 2006010304, REAL PROPERTY RECORDS OF WILLIAMSON COUNTY, TEXAS. (DOES NOT AFFECT PARCEL)

V. MEMORANDUM OF LEASE AGREEMENT BY AND BETWEEN SPG WOLF RANCH, L.P., A TEXAS LIMITED PARTNERSHIP, AS LESSOR, AND BEST BUY STORES, L.P., A VIRGINIA LIMITED PARTNERSHIP, AS LESSEE, DATED JANUARY 24, 2006, AND RECORDED FEBRUARY 2, 2006 IN/UNDER COUNTY CLERK'S FILE NUMBER 2006008194, OF THE REAL PROPERTY RECORDS OF WILLIAMSON COUNTY, TEXAS. (MAY AFFECT PARCEL)

W. MEMORANDUM OF LEASE AGREEMENT BY AND BETWEEN SPG WOLF RANCH, L.P., A TEXAS LIMITED PARTNERSHIP, AS LESSOR, AND PETSMART, INC., A DELAWARE CORPORATION, AS LESSEE, DATED FEBRUARY 23, 2005, AND RECORDED DECEMBER 27, 2005 IN/UNDER COUNTY CLERK'S FILE NUMBER 2005101775, OF THE REAL PROPERTY RECORDS OF WILLIAMSON COUNTY, TEXAS. (DOES NOT AFFECT PARCEL)

X. EASEMENT(S) FOR THE PURPOSE(S) SHOWN BELOW AND RIGHTS INCIDENTAL THERETO, AS GRANTED TO CITY OF GEORGETOWN, FILED NOVEMBER 10, 2004 RECORDED IN CLERK'S FILE NO. 2004087631, REAL PROPERTY RECORDS OF TRAVIS COUNTY, TEXAS. (DOES NOT AFFECT PARCEL)

Y. MEMORANDUM OF LEASE AGREEMENT BY AND BETWEEN SPG WOLF RANCH, L.P., A TEXAS LIMITED PARTNERSHIP, AS LESSOR, AND MARMAXX OPERATING CORP., A DELAWARE CORPORATION, AS LESSEE, DATED MARCH 14, 2005, AND RECORDED NOVEMBER 27, 2006 IN/UNDER COUNTY CLERK'S FILE NUMBER 2006102728, OF THE REAL PROPERTY RECORDS OF WILLIAMSON COUNTY, TEXAS. (MAY AFFECT PARCEL)

(CONTINUED ON SHEET 6 OF 7)

REF. FIELD NOTE NO. 49640
FILE:\\samino\AUS\PROJECTS\1019052245F\100\Survey\03Exhibits\Parcel 10\SH 29_Parcel 10.dgn

EXISTING	±1.314 AC.	ACQUIRE	0.0284 AC.	REMAINING	1.2856 AC.	RIGHT

© 2024
Texas Department of Transportation

SAM™
4801 Southwest Parkway
Building Two, Suite 100
Austin, Texas 78735
(512) 447-0575
Fax: (512) 326-3029
Texas Firm Registration No. 10064300

RIGHT-OF-WAY SKETCH
SHOWING PROPERTY OF
RARE HOSPITALITY INTERNATIONAL, INC.
PARCEL 10
0.0284 AC. (1,239 SQ. FT.)
CSJ NO. 0337-01-053

CERTIFIED TO BE A TRUE AND CORRECT COPY
NANCY E. RISTER, County Clerk
Williamson County

Docusign Envelope ID: 355DF73D-1094-4E8F-8796-37ABDEE9F378

SCHEDULE B: (CONTINUED FROM SHEET 5 OF 7)

Z. WORK ASSIGNMENT SUPPLEMENT FORM OF EASEMENT BY AND BETWEEN SPG WOLF RANCH, LP, A TEXAS LIMITED LIABILITY PARTNERSHIP AND ATMOS ENERGY CORPORATION, DATED OCTOBER 16, 2008 AND RECORDED NOVEMBER 13, 2008 AS CLERK'S FILE NO. 2008085192, OF THE REAL PROPERTY RECORDS OF WILLIAMSON COUNTY, TEXAS. (DOES NOT AFFECT PARCEL)

AA. TERMS AND PROVISIONS OF SIGN STRUCTURE EASEMENT AGREEMENT BY AND BETWEEN SPG WOLF RANCH, L.P. AND RARE HOSPITALITY INTERNATIONAL, INC. DATED DECEMBER 19, 2011, FILED DECEMBER 28, 2011, RECORDED IN CLERK'S FILE NO. 2011087598, REAL PROPERTY RECORDS, WILLIAMSON COUNTY, TEXAS. (DOES NOT AFFECT PARCEL)

BB. EASEMENTS AS SET FORTH IN SPECIAL WARRANTY DEED RECORDED IN CLERK'S FILE NO. 2011087596, REAL PROPERTY RECORDS, WILLIAMSON COUNTY, TEXAS. (AFFECTS PARCEL AS SHOWN)

CC. THE TERMS, PROVISIONS, EASEMENTS, COVENANTS, RESTRICTIONS AS SET FORTH IN INSTRUMENTS RECORDED IN CLERK'S FILE NOS. 2003124160, 2005102442, 2011087597, 2017013539, 2016030815, 2017113189, 2022089914, 2023099707, 2023099708, REAL PROPERTY RECORDS, WILLIAMSON COUNTY, TEXAS; WHEN TAKEN WITH ALL AMENDMENTS AND/OR SUPPLEMENTS THERETO. (MAY AFFECT PARCEL)

REF. FIELD NOTE NO. 49640
FILE:\\somlnc\AUS\PROJECTS\1019052245F\100\Survey\03Exhibits\Parcel 10\SH 29_Parcel 10.dgn

EXISTING	±1.314 AC.	ACQUIRE	0.0284 AC.	REMAINING	1.2856 AC. RIGHT

© 2024
Texas Department of Transportation

SAM
4801 Southwest Parkway
Building Two, Suite 100
Austin, Texas 78735
(512) 447-0575
Fax: (512) 326-3029
Texas Firm Registration No. 10064300

RIGHT-OF-WAY SKETCH
SHOWING PROPERTY OF
RARE HOSPITALITY INTERNATIONAL, INC.
PARCEL 10
0.0284 AC. (1,239 SQ. FT.)
CSJ NO. 0337-01-053

CERTIFIED TO BE A TRUE AND CORRECT COPY
NANCY E. RISTER, County Clerk
Williamson County

Docusign Envelope ID: 355DF73D-1094-4E8F-8796-37ABDEE9F378

LEGEND

■	TYPE I CONCRETE MONUMENT FOUND
⊡	TYPE II BRONZE DISK IN CONCRETE FOUND
⊙	TYPE II BRONZE DISK IN CONCRETE SET
○	5/8" IRON ROD SET WITH TXDOT ALUMINUM CAP
●	5/8" IRON ROD FOUND (AS NOTED)
⊕	NAIL FOUND (AS NOTED)
⬡	FENCE POST (TYPE NOTED)
△	CALCULATED POINT
℄	PROPERTY LINE
( )	RECORD INFORMATION
P.O.B.	POINT OF BEGINNING
P.O.C.	POINT OF COMMENCING
P.O.R.	POINT OF REFERENCE
N.T.S.	NOT TO SCALE
P.R.W.C.TX.	PLAT RECORDS OF WILLIAMSON COUNTY, TEXAS
O.P.R.W.C.TX.	OFFICIAL PUBLIC RECORDS OF WILLIAMSON COUNTY, TEXAS
1/2	DISTANCE NOT TO SCALE
	DEED LINE (COMMON OWNERSHIP)
	PROPERTY LINE
	EXISTING RIGHT-OF-WAY
	PARCEL LIMITS
	PROPOSED DRAINAGE EASEMENT
	EXISTING EASEMENT LINE

N

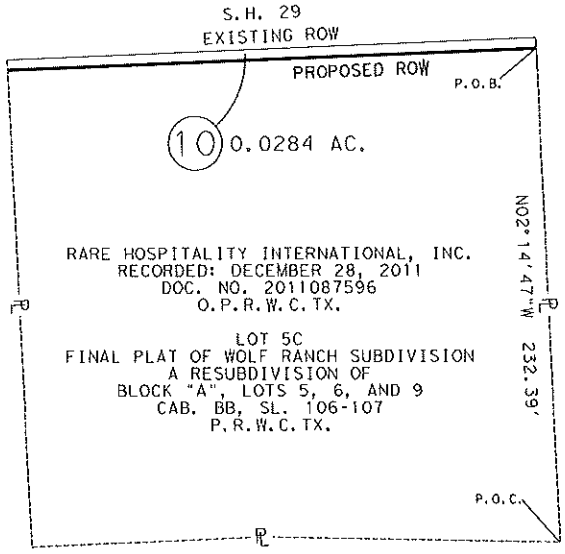

PARENT TRACT INSET
N.T.S.

NOTES:

1. ALL PROJECT COORDINATES AND BEARINGS ARE GRID NORTH BASED ON THE TEXAS COORDINATE SYSTEM, CENTRAL ZONE (4203), NAD 83 (2011), EPOCH 2010.0. ALL SURFACE COORDINATES SHOWN HEREON MAY BE CONVERTED TO GRID BY DIVIDING BY A SURFACE ADJUSTMENT FACTOR OF 1.00011. UNITS: U.S. SURVEY FEET. SURVEY DATE: AUGUST, 2023

2. THIS SURVEY WAS COMPLETED WITH THE BENEFIT OF TITLE REPORT, PROVIDED BY FIRST NATIONAL TITLE INSURANCE COMPANY, GF NO. 24-779562-GT, EFFECTIVE DATE JANUARY 18, 2024, AND ISSUED DATE JANUARY 26, 2024. THERE MAY BE EASEMENTS OR OTHER MATTERS, RECORDED OR UNRECORDED, THAT ARE NOT SHOWN.

3. A PROPERTY DESCRIPTION OF EVEN DATE WAS PREPARED IN CONJUNCTION WITH THIS PARCEL PLAT.

* AREA CALCULATED BY SAM, LLC.

I HEREBY CERTIFY THAT THIS SURVEY WAS MADE ON THE GROUND UNDER MY DIRECTION AND SUPERVISION AND THAT THIS PLAT IS TRUE AND CORRECT TO THE BEST OF MY KNOWLEDGE AND BELIEF.

STATE OF TEXAS
REGISTERED
SCOTT C. BRASHEAR
6660
PROFESSIONAL LAND SURVEYOR

Scott C. Brashear

SCOTT C. BRASHEAR
REGISTERED PROFESSIONAL LAND SURVEYOR
NO. 6660, STATE OF TEXAS

4/5/2024
DATE

[A]
WPG WOLF RANCH, LLC
TRACT 2
DOC. NO. 2014044665
O.P.R.W.C.TX.

LOT 2A, BLOCK "A"
AVENDED PLAT OF LOT 2 AND LOT 8,
BLOCK "A" WOLF RANCH SUBDIVISION
CAB. AA, SL. 220-223
P.R.W.C.TX.

REF. FIELD NOTE NO. 49640

FILE:\\saminc\AUS\PROJECTS\1019052245F\100\Survey\03Exhibits\Parcel 10\SH 29_Parcel 10.dgn

EXISTING	*1.314 AC.	ACQUIRE	0.0284 AC.	REMAINING	1.2856 AC.	RIGHT

© 2024
Texas Department of Transportation

SAM
4801 Southwest Parkway
Building Two, Suite 100
Austin, Texas 78735
(512) 447-0575
Fax: (512) 326-3029
Texas Firm Registration No. 10064300

RIGHT-OF-WAY SKETCH
SHOWING PROPERTY OF
RARE HOSPITALITY INTERNATIONAL, INC.
PARCEL 10
0.0284 AC. (1,239 SQ. FT.)
CSJ NO. 0337-01-053

CERTIFIED TO BE A TRUE AND CORRECT COPY
NANCY E. RISTER, County Clerk
Williamson County

Docusign Envelope ID: 355DF73D-1094-4E8F-8796-37ABDEE9F378

EXHIBIT "B"

PARTIES TO BE NOTIFIED OF THE FILING OF THE AWARD BY CERTIFIED MAIL, RETURN RECEIPT REQUESTED:

Kristina W. Silcocks
Phelps Dunbar LLP
3600 N. Capitol of Texas Highway, Suite B300
Austin, Texas 78746
Counsel for Plaintiff City of Georgetown, Texas

RARE Hospitality International, Inc. d/b/a Longhorn Steakhouse
Corporate Creations Network Inc., Registered Agent
5444 Westheimer #1000
Houston, Texas 77056

SPG Wolf Ranch, L.P.
CT Corporation System, Registered Agent
1999 Bryan Street, Suite 900
Dallas, TX 75201-3136

WPG Wolf Ranch, LLC
CT Corporation System, Registered Agent
1999 Bryan Street, Suite 900
Dallas, TX 75201-3136

CERTIFIED TO BE A TRUE AND CORRECT COPY
NANCY E. RISTER, County Clerk
Williamson County

Automated Certificate of eService

This automated certificate of service was created by the efiling system. The filer served this document via email generated by the efiling system on the date and to the persons listed below. The rules governing certificates of service have not changed. Filers must still provide a certificate of service that complies with all applicable rules.

Lillian Herrera on behalf of Kristina Silcocks
Bar No. 795930
Lillian.Herrera@phelps.com
Envelope ID: 102158929
Filing Code Description: Proposed Order
Filing Description: Award of Special Commissioners
Status as of 6/18/2025 12:40 PM CST

Case Contacts

Name	BarNumber	Email	TimestampSubmitted	Status
Lillian Herrera		lillian.herrera@phelps.com	6/18/2025 12:37:54 PM	SENT
Kristina W.Silcocks		kristina.silcocks@phelps.com	6/18/2025 12:37:54 PM	SENT

STATE OF TEXAS
COUNTY OF WILLIAMSON
I, NANCY E. RISTER, COUNTY CLERK, DO HEREBY CERTIFY THAT THIS IS A TRUE AND CORRECT COPY AS SAME APPEARS OF RECORD 'N MY CUSTODY.
Witness my hand and seal of office on 6/18/2025
NANCY E. RISTER, COUNTY CLERK
WILLIAMSON COUNTY, TEXAS
By _____ Deputy

CERTIFIED TO BE A TRUE AND CORRECT COPY
NANCY E. RISTER, County Clerk
Williamson County

ELECTRONICALLY RECORDED 2026014322
Williamson County, Texas Total Pages: 11

WARRANTY DEED

GT2403250

NOTICE OF CONFIDENTIALITY RIGHTS: If you are a natural person, you may remove or strike any of the following information from this instrument before it is filed for record in the public records: Your social security number or your driver's license number.

DATE: February 23, 2026

GRANTOR: H-E-B, LP, a Texas limited partnership

GRANTOR'S MAILING ADDRESS (including County): 646 S. Flores Street, San Antonio, Bexar County, Texas 78204

GRANTEE: City of Georgetown, a Texas home-rule municipal corporation

GRANTEE'S MAILING ADDRESS (including County): P.O. Box 409, Georgetown, Williamson County, Texas 78627

CONSIDERATION: Ten and No/100 Dollars ($10.00) and other good and valuable consideration.

PROPERTY (including any improvements):

> Being a 0.0588 acre (2,561 square foot) parcel of land, more or less, said parcel being more fully described in **Exhibit "A"** and depicted in **Exhibit "B"**, each being attached hereto and by this reference incorporated herein (the "Property").

RESERVATIONS FROM AND EXCEPTIONS TO CONVEYANCE AND WARRANTY: This conveyance is made, delivered and accepted subject to any and all easements, covenants, leases, rights-of-way, conditions, restrictions, outstanding mineral interests and royalty interests, if any, relating to the Property, to the extent, and only to the extent, that the same may still be in force and effect and shown in the Official Public Records of Williamson County, Texas.

PERMITTED USE: Notwithstanding anything to the contrary herein, Grantee' s use of the property shall be limited to right-of-way purposes only and for no other use (the "ROW Purpose").

Grantor, for the consideration and subject to the Reservations From and Exceptions to Conveyance and Warranty, GRANTS, SELLS, and CONVEYS to Grantee the Property, together with all and singular the rights and appurtenances thereto in any way belonging for the ROW Purpose described herein, to have and hold it to Grantee and Grantee's heirs, successors and assigns forever. Grantor binds Grantor and Grantor's heirs, successors and assigns to warrant and forever defend all and singular the Property to Grantee and

Grantee's heirs, successors, and assigns against every person whomsoever lawfully claiming or to claim the same or any part thereof, by, through or under Grantor, but not otherwise, except as to the Reservations From and Exceptions to Conveyance and Warranty.

[Signature Page Follows]

EXECUTED to be effective as of the date first written above.

GRANTOR:

H-E-B, LP, a Texas limited partnership

By: _____
Name: Benjamin R. Scott
Title: Group Vice President of Real Estate and Shopping Center Development

STATE OF TEXAS)
)
COUNTY OF BEXAR)

ACKNOWLEDGEMENT

This instrument was acknowledged before me on the 23rd day of February, 2026 by Benjamin R. Scott, the Group Vice President of Real Estate and Shopping Center Development of H-E-B, LP, a Texas limited partnership, on behalf of said limited partnership.

ADRIANA SANCHEZ
Notary ID #130807607
My Commission Expires
September 2, 2028

_____
Notary Public, State of Texas

AFTER RECORDING RETURN TO:
City of Georgetown
Attn: Real Estate Services
P.O. Box 409
Georgetown, Texas 78627

EXHIBIT "A"

County: Williamson
Highway: S.H. 29
Limits: From 0.161 Miles West of Wolf Ranch Parkway To I.H. 35
CCSJ: 0337-01-053
Parcel No.: 11

April 5, 2024

PROPERTY DESCRIPTION FOR PARCEL 11

DESCRIPTION OF A 0.0588 ACRE (2,561 SQ. FT.) PARCEL OF LAND LOCATED IN THE C. STUBBLEFIELD SURVEY, ABSTRACT NO. 558, WILLIAMSON COUNTY, TEXAS, BEING A PORTION OF LOT 1, BLOCK 1, WOLF LAKES VILLAGE, SECTION 3, FINAL PLAT, AS RECORDED IN DOCUMENT NO. 2022001088, OFFICIAL PUBLIC RECORDS OF WILLIAMSON COUNTY, TEXAS (O.P.R.W.C.TX.), DESCRIBED IN A DEED TO H-E-B, LP, RECORDED DECEMBER 10, 2021 IN DOCUMENT NO. 2021187597, O.P.R.W.C.TX.; SAID 0.0588 ACRE (2,561 SQ. FT.) PARCEL, AS SHOWN ON A PLAT PREPARED BY SAM, LLC, BEING MORE PARTICULARLY DESCRIBED BY METES AND BOUNDS AS FOLLOWS:

COMMENCING at a 5/8-inch iron rod with a yellow plastic cap stamped "Jones Carter Property Corner" found 126.00 feet left of State Highway (S.H.) 29 Engineer's Centerline Station (E.C.S.) 174+58.19 on the existing east right-of-way line of Wolf Lakes Drive, a variable width right-of-way, described to the City of Georgetown in Document No. 2004068070, O.P.R.W.C.TX., for an angle point in the west line of said Lot 1;

THENCE, South 47°20'53" East, with the west line of said Lot 1 and the existing east right-of-way line of said Wolf Lakes Drive, a distance of **63.64 feet** to a "Texas Department of Transportation (TXDOT)" Type II bronze disk set in concrete (Surface Coordinates: N=10,204,997.55, E=3,126,423.14) 81.00 feet left of S.H. 29 E.C.S. 175+03.19 on the proposed north right-of-way line of S.H. 29, for the northwest corner and **POINT OF BEGINNING** of the parcel described herein;

THENCE, departing the west line of said Lot 1 and the existing east right-of-way line of said Wolf Lakes Drive, with the proposed north right-of-way line of said S.H. 29, over and across said Lot 1, the following two (2) courses and distances numbered 1-2:

1) **North 87°39'07" East**, a distance of **514.77 feet** to a TXDOT Type II bronze disk set in concrete 81.00 feet left of S.H. 29 E.C.S 180+17.96, for the northeast corner of the parcel described herein, and

2) **South 02°20'53" East**, a distance of **5.00 feet** to a TXDOT Type II bronze disk set in concrete 76.00 feet left of S.H. 29 E.C.S. 180+17.96 on the existing north right-of-way line of S.H. 29, a variable width right-of-way, as described to the State of Texas in Document No. 2006006974, O.P.R.W.C.TX., and as depicted in TXDOT R.O.W. Strip Map CSJ No. 0337-01-023, for the southeast corner of the parcel described herein;

3) **THENCE, South 87°39'07" West**, departing the proposed north right-of-way line of said S.H. 29, with the existing north right-of-way line of said S.H. 29, a distance of **509.77 feet** to a 5/8-inch iron rod with a yellow plastic cap stamped "Jones Carter Property Corner" found on the existing east right-of-way line of said Wolf Lakes Drive, for the southwest corner of said Lot 1 and of the parcel described herein;

THIS SPACE INTENTIONALLY LEFT BLANK

EXHIBIT "A"

County: Williamson
Highway: S.H. 29
Limits: From 0.161 Miles West of Wolf Ranch Parkway To I.H. 35
CCSJ: 0337-01-053
Parcel No.: 11

4) **THENCE, North 47°20'53" West**, departing the existing north right-of-way line of said S.H. 29, with the existing east right-of-way line of said Wolf Lakes Drive and the west line of said Lot 1, a distance of **7.07 feet** to the **POINT OF BEGINNING**, and containing 0.0588 acres (2,561 sq. ft.) of land.

Bearing Basis:
All bearings shown are based on NAD83/2011 Texas Coordinate System, Central Zone (4203). All distances shown are surface and may be converted to grid by dividing by a Surface Adjustment Factor of 1.00011. All coordinates shown are in surface and may be converted by dividing by the same factor. Project units are in U.S. Survey Feet.

THE STATE OF TEXAS §
§ KNOW ALL MEN BY THESE PRESENTS:
COUNTY OF TRAVIS §

That I, Scott C. Brashear, a Registered Professional Land Surveyor, do hereby certify that the above description is true and correct to the best of my knowledge and belief and that the property described herein was determined by a survey made on the ground under my direction and supervision.

WITNESS MY HAND AND SEAL at Austin, Travis County, Texas, on the date shown below.

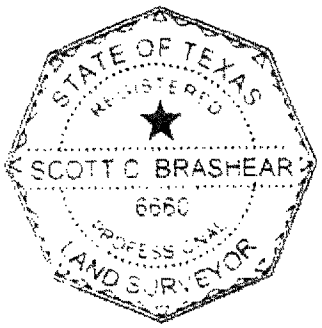

SURVEYING AND MAPPING, LLC
4801 Southwest Pkwy
Building Two, Suite 100
Austin, Texas 78735
TX. Firm No. 10064300

Scott C. Brashear 4/5/2024
Scott C. Brashear Date
Registered Professional Land Surveyor
No. 6660 – State of Texas

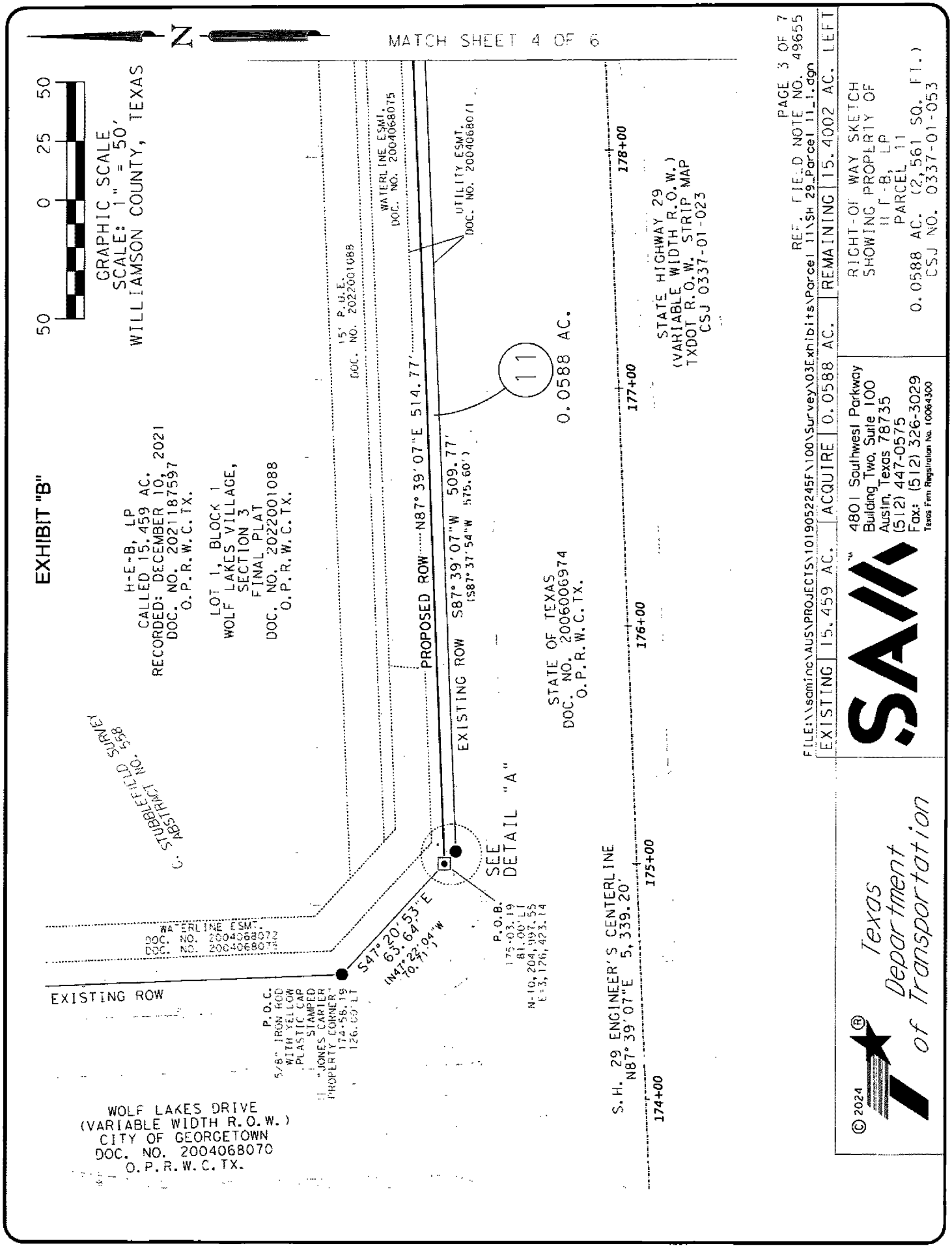
EXHIBIT "B"
GRAPHIC SCALE
SCALE: 1" = 50'
WILLIAMSON COUNTY, TEXAS
50 0 25 50
N
MATCH SHEET 4 OF 6
H-E-B, LP
CALLED 15.459 AC.
RECORDED: DECEMBER 10, 2021
DOC. NO. 2021187597
O.P.R.W.C.TX.
LOT 1, BLOCK 1
WOLF LAKES VILLAGE,
SECTION 3
FINAL PLAT
DOC. NO. 2022001088
O.P.R.W.C.TX.
C. STUBBLEFIELD SURVEY
ABSTRACT NO. 558
15' P.U.E.
DOC. NO. 2022001088
WATERLINE ESMT.
DOC. NO. 2004068075
UTILITY ESMT.
DOC. NO. 2004068071
PROPOSED ROW
N87° 39' 07"E 514.77'
EXISTING ROW S87° 39' 07"W 509.77'
(S87° 37' 54"W 575.60')
11
0.0588 AC.
STATE OF TEXAS
DOC. NO. 2006006974
O.P.R.W.C.TX.
SEE
DETAIL "A"
STATE HIGHWAY 29
(VARIABLE WIDTH R.O.W.)
TXDOT R.O.W. STRIP MAP
CSJ 0337-01-023
178+00
177+00
176+00
175+00
174+00
S.H. 29 ENGINEER'S CENTERLINE
N87° 39' 07"E 5,339.20'
EXISTING ROW
WATERLINE ESMT.
DOC. NO. 2004068072
DOC. NO. 2004068074
P.O.C.
5/8" IRON ROD
WITH YELLOW
PLASTIC CAP
STAMPED
"JONES CARTER
PROPERTY CORNER"
174+56.19
126.00' LT
S47° 20' 53"E
(N47° 22' 04"W
70.71')
P.O.B.
175+03.19
81.00' LT
N=10,204,997.55
E=3,126,423.14
WOLF LAKES DRIVE
(VARIABLE WIDTH R.O.W.)
CITY OF GEORGETOWN
DOC. NO. 2004068070
O.P.R.W.C.TX.
PAGE 3 OF 7
REF. FIELD NOTE NO. 49655
FILE:\\saminc\AUS\PROJECTS\101905224SF\100\Survey\03Exhibits\Parcel 11\SH 29_Parcel 11_1.dgn
EXISTING 15.459 AC. | ACQUIRE 0.0588 AC. | REMAINING 15.4002 AC. LEFT
RIGHT-OF WAY SKETCH
SHOWING PROPERTY OF
H-E-B, LP
PARCEL 11
0.0588 AC. (2,561 SQ. FT.)
CSJ NO. 0337-01-053
SAM
4801 Southwest Parkway
Building Two, Suite 100
Austin, Texas 78735
(512) 447-0575
Fax: (512) 326-3029
Texas Firm Registration No. 10064300
Texas Department of Transportation
© 2024

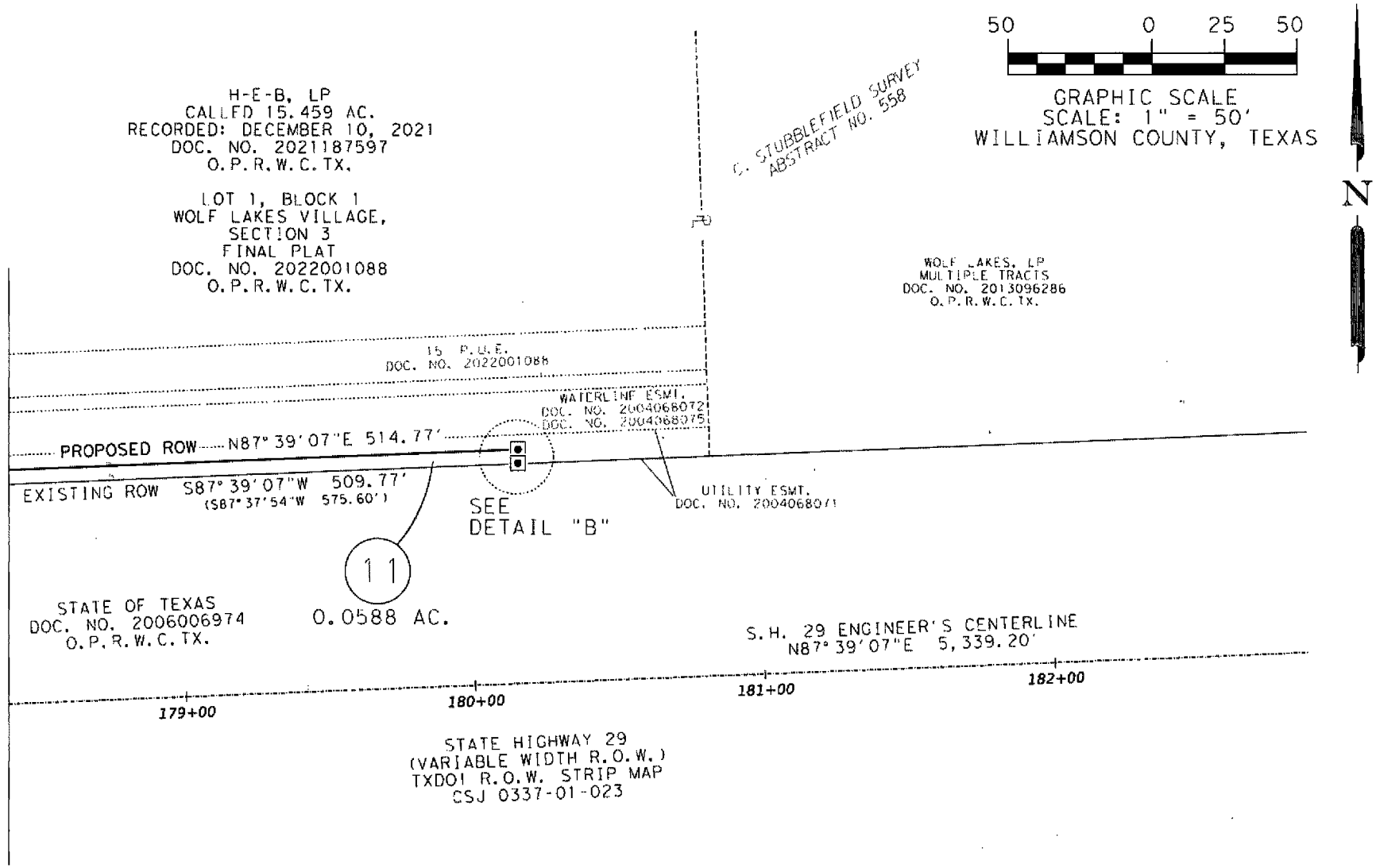

REF. FIELD NOTE NO. 49655

FILE:\\saminc\AUS\PROJECTS\1019052245F\100\Survey\03Exhibits\Parcel 11\SH 29_Parcel 11_2.dgn

EXISTING	15.459 AC.	ACQUIRE	0.0588 AC.	REMAINING	15.4002 AC. LEFT

© 2024

Texas Department of Transportation

SAM
4801 Southwest Parkway
Building Two, Suite 100
Austin, Texas 78735
(512) 447-0575
Fax: (512) 326-3029
Texas Firm Registration No. 10064300

RIGHT-OF-WAY SKETCH
SHOWING PROPERTY OF
H-E-B, LP
PARCEL 11
0.0588 AC. (2,561 SQ. FT.)
CSJ NO. 0337-01-053

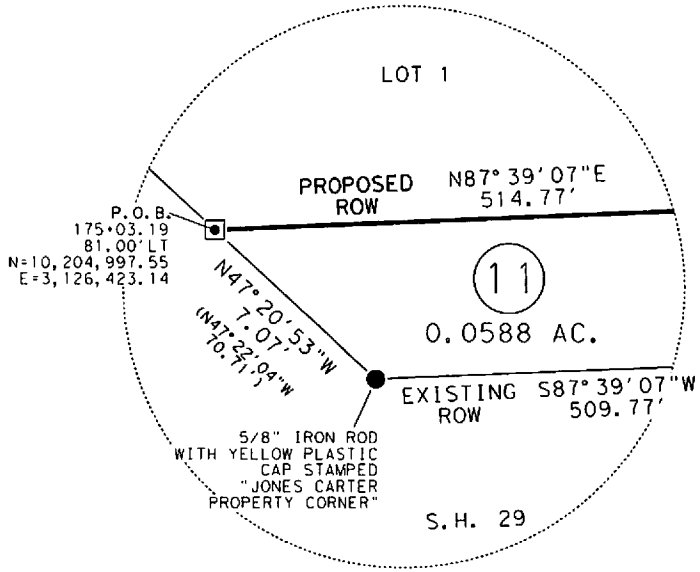

DETAIL "A"
NOT TO SCALE

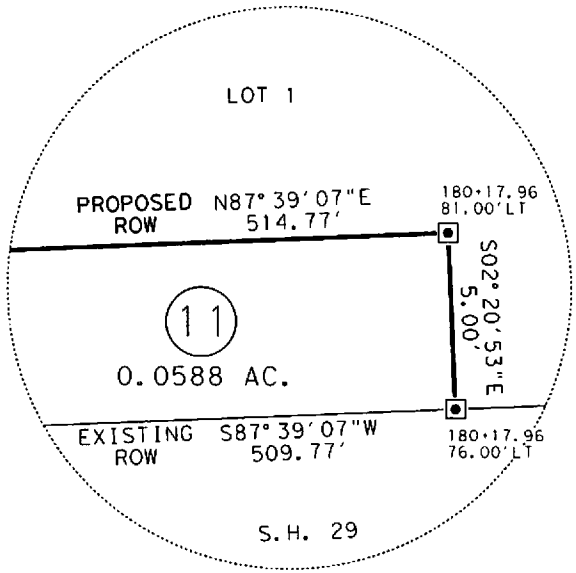

DETAIL "B"
NOT TO SCALE

REF. FIELD NOTE NO. 49655
FILE:\\saminc\AUS\PROJECTS\1019052245F\100\Survey\03Exhibits\Parcel 11\SH 29_Parcel 11_2.dgn

EXISTING	15.459 AC.	ACQUIRE	0.0588 AC.	REMAINING	15.4002 AC. LEFT

© 2024

Texas Department of Transportation

SAM™
4801 Southwest Parkway
Building Two, Suite 100
Austin, Texas 78735
(512) 447-0575
Fax: (512) 326-3029
Texas Firm Registration No. 10064300

RIGHT-OF-WAY SKETCH
SHOWING PROPERTY OF
H-E-B, LP
PARCEL 11
0.0588 AC. (2,561 SQ. FT.)
CSJ NO. 0337-01-053

SCHEDULE B:

THIS SURVEY HEREON WAS PREPARED IN CONJUCTION WITH THAT COMMITMENT FOR TITLE INSURANCE GF NO. 24-779573-GT, ISSUED BY FIRST NATIONAL TITLE INSURANCE COMPANY, EFFECTIVE DATE JANUARY 21, 2024, AND ISSUED DATE JANUARY 26, 2024.

10. THE FOLLOWING MATTERS AND ALL TERMS OF THE DOCUMENTS CREATING OR OFFERING EVIDENCE OF THE MATTERS (WE MUST INSERT MATTERS OR DELETE THIS EXCEPTION.):

A. ALL LEASES, GRANTS, EXCEPTIONS OR RESERVATIONS OF COAL, LIGNITE, OIL, GAS AND OTHER MINERALS, TOGETHER WITH ALL RIGHTS, PRIVILEGES AND IMMUNITIES RELATING THERETO, APPEARING IN THE PUBLIC RECORDS WHETHER LISTED IN SCHEDULE B OR NOT. THERE MAY BE LEASES, GRANTS, EXCEPTIONS OR RESERVATIONS OF MINERAL INTEREST THAT ARE NOT LISTED.

B. ALL LEASES, GRANTS, EXCEPTIONS OR RESERVATIONS OF THE GEOTHERMAL ENERGY AND ASSOCIATED RESOURCES BELOW THE SURFACE OF THE LAND, TOGETHER WITH ALL RIGHTS, PRIVILEGES, AND IMMUNITIES RELATING THERETO, APPEARING IN THE PUBLIC RECORDS WHETHER LISTED IN SCHEDULE B OR NOT. THERE MAY BE LEASES, GRANTS, EXCEPTIONS OR RESERVATIONS OF THE GEOTHERMAL ENERGY AND ASSOCIATED RESOURCES BELOW THE SURFACE OF THE LAND THAT ARE NOT LISTED.

C. ALL VISIBLE AND APPARENT EASEMENTS OR USES AND ALL UNDERGROUND EASEMENTS OR USES, THE EXISTENCE OF WHICH MAY ARISE BY UNRECORDED GRANT OR BY USE.

D. RIGHTS OF PARTIES IN POSSESSION.

E. RIGHTS OF TENANTS, AS TENANTS ONLY, UNDER UNRECORDED LEASES OR RENTAL AGREEMENTS.

F. THE TERMS, PROVISIONS, EASEMENTS, COVENANTS, RESTRICTIONS AND LIEN FOR ASSESSMENTS AS SHOWN IN RESTRICTIONS RECORDED IN DOCUMENT NO. 2020067908, REAL PROPERTY RECORDS, WILLIAMSON COUNTY, TEXAS; WHEN TAKEN WITH ALL AMENDMENTS AND/OR SUPPLEMENTS THERETO.

SAID LIEN IS SUBORDINATE TO ANY PURCHASE MONEY LIEN OR THE RENEWAL AND EXTENSION THEREOF.

G. THE FOLLOWING EASEMENT(S) AND/OR BUILDING LINE(S) AFFECTING THE SUBJECT PROPERTY AS SHOWN ON MAP OR PLAT RECORDED IN , MAP OR PLAT RECORDS, WILLIAMSON COUNTY, TEXAS:

H. AN ELECTRIC TRANSMISSION AND/OR DISTRIBUTION LINE AND APPURTENANCES EASEMENT GRANTED TO TEXAS POWER & LIGHT COMPANY, BY INSTRUMENT DATED JANUARY 25, 1945, RECORDED IN VOLUME 329, PAGE 45 OF THE DEED RECORDS OF WILLIAMSON COUNTY, TEXAS. (MAY AFFECT PARCEL)

I. ACCESS AND USE RESTRICTIONS AS SET OUT IN THAT CERTAIN DEED (CONTROLLED ACCESS HIGHWAY FACILITY) TO THE STATE OF TEXAS RECORDED IN VOLUME 460, PAGE 386 OF THE DEED RECORDS OF WILLIAMSON COUNTY, TEXAS. (DOES NOT AFFECT PARCEL)

J. THE TERMS, CONDITIONS AND STIPULATIONS OF THAT CERTAIN DEVELOPMENT AGREEMENT RECORDED DECEMBER 2, 2014, RECORDED UNDER DOCUMENT NO. 2014095878 OF THE OFFICIAL PUBLIC RECORDS OF WILLIAMSON COUNTY, TEXAS. (MAY AFFECT PARCEL)

K. THE TERMS, CONDITIONS AND STIPULATIONS OF THAT CERTAIN WILLIAMSON COUNTY REGIONAL HABITAT CONSERVATION PLAN MEMORANDUM OF PARTICIPATION AGREEMENT RELATIVE TO U.S. FISH AND WILDLIFE SERVICE PERMIT (PERMIT NO. TE-181840-1) DATED MAY 1, 2020, RECORDED UNDER DOCUMENT NO. 2020058654 OF THE OFFICIAL PUBLIC RECORDS OF WILLIAMSON COUNTY, TEXAS. (AFFECTS PARCEL)

L. A UTILITY EASEMENT GRANTED TO THE CITY OF GEORGETOWN, BY INSTRUMENT DATED AUGUST 24, 2004, RECORDED UNDER DOCUMENT NO. 2004068071 OF THE OFFICIAL PUBLIC RECORDS OF WILLIAMSON COUNTY, TEXAS. (AFFECTS PARCEL AS SHOWN)

M. A UTILITY EASEMENT GRANTED TO THE CITY OF GEORGETOWN, BY INSTRUMENT DATED AUGUST 24, 2004, RECORDED UNDER DOCUMENT NO. 2004068074 OF THE OFFICIAL PUBLIC RECORDS OF WILLIAMSON COUNTY, TEXAS. (DOES NOT AFFECT PARCEL)

N. A PUBLIC UTILITY EASEMENT RESERVED BY THE CITY OF GEORGETOWN, IN INSTRUMENT DATED JULY 12, 2006, RECORDED UNDER DOCUMENT NO. 2006063019 OF THE OFFICIAL PUBLIC RECORDS OF WILLIAMSON COUNTY, TEXAS. (DOES NOT AFFECT PARCEL)

O. A WATER LINE EASEMENT GRANTED TO THE CITY OF ROUND ROCK, TEXAS, BY INSTRUMENT DATED AUGUST 24, 2004, RECORDED UNDER DOCUMENT NO. 2004068072 OF THE OFFICIAL PUBLIC RECORDS OF WILLIAMSON COUNTY. TEXAS. (DOES NOT AFFECT PARCEL)

P. TERMS, CONDITIONS AND STIPULATIONS OF THAT EASEMENT AGREEMENT FOR UTILITIES, RECORDED IN DOCUMENT NO. 2023094784, REAL PROPERTY RECORDS, WILLIAMSON COUNTY, TEXAS. (DOES NOT AFFECT PARCEL)

Q. TERMS, CONDITIONS AND STIPULATIONS OF THAT CERTAIN EDWARDS AQUIFER PROTECTION PLAN APPROVED JULY 30, 2021, EVIDENCED BY AFFIDAVIT RECORDED UNDER DOCUMENT NO. 2021125324 OF THE OFFICIAL PUBLIC RECORDS OF WILLIAMSON COUNTY, TEXAS. (MAY AFFECT PARCEL)

R. TERMS, CONDITIONS AND STIPULATIONS OF THAT CERTAIN EDWARDS AQUIFER PROTECTION PLAN APPROVED SEPTEMBER 21, 2021, EVIDENCED BY AFFIDAVIT RECORDED UNDER DOCUMENT NO. 2021153469 OF THE OFFICIAL PUBLIC RECORDS OF WILLIAMSON COUNTY, TEXAS. (MAY AFFECT PARCEL)

S. MEMORANDUM OF REPURCHASE OPTION RESERVED BY WOLF LAKES, LP, RECORDED IN DOCUMENT NO. 2021187600, REAL PROPERTY RECORDS, WILLIAMSON COUNTY, TEXAS. (MAY AFFECT PARCEL)

T. TERMS AND PROVISIONS OF REVOCALBE LICENSE AGREEMENT, RECORDED IN DOCUMENT NO. 2022043500, REAL PROPERTY RECORDS, WILLIAMSON COUNTY, TEXAS. (MAY AFFECT PARCEL)

REF. FIELD NOTE NO. 49655

FILE:\\saminc\AUS\PROJECTS\1019052245F\100\Survey\03Exhibits\Parcel 11\SH 29_Parcel 11_2.dgn

EXISTING	15.459 AC.	ACQUIRE	0.0588 AC.	REMAINING	15.4002 AC. LEFT

© 2024

Texas Department of Transportation

SAM™
4801 Southwest Parkway
Building Two, Suite 100
Austin, Texas 78735
(512) 447-0575
Fax: (512) 326-3029
Texas Firm Registration No. 10064300

RIGHT-OF-WAY SKETCH
SHOWING PROPERTY OF
H-E-B, LP
PARCEL 11
0.0588 AC. (2,561 SQ. FT.)
CSJ NO. 0337-01-053

LEGEND

■	TYPE I CONCRETE MONUMENT FOUND
◎	TYPE II BRONZE DISK IN CONCRETE FOUND
⊙	TYPE II BRONZE DISK IN CONCRETE SET
○	5/8" IRON ROD SET WITH TXDOT ALUMINUM CAP
●	5/8" IRON ROD FOUND (AS NOTED)
⊕	NAIL FOUND (AS NOTED)
⬡	FENCE POST (TYPE NOTED)
△	CALCULATED POINT
℄	PROPERTY LINE
( )	RECORD INFORMATION
P.O.B.	POINT OF BEGINNING
P.O.C.	POINT OF COMMENCING
P.O.R.	POINT OF REFERENCE
N.T.S.	NOT TO SCALE
P.R.W.C.TX.	PLAT RECORDS OF WILLIAMSON COUNTY, TEXAS
O.P.R.W.C.TX.	OFFICIAL PUBLIC RECORDS OF WILLIAMSON COUNTY, TEXAS
	DISTANCE NOT TO SCALE
	DEED LINE (COMMON OWNERSHIP)
	PROPERTY LINE
	EXISTING RIGHT-OF-WAY
	PARCEL LIMITS
	PROPOSED DRAINAGE EASEMENT
	EXISTING EASEMENT LINE

NOTES:

1. ALL PROJECT COORDINATES AND BEARINGS ARE GRID NORTH BASED ON THE TEXAS COORDINATE SYSTEM, CENTRAL ZONE (4203), NAD 83 (2011), EPOCH 2010.0. ALL SURFACE COORDINATES SHOWN HEREON MAY BE CONVERTED TO GRID BY DIVIDING BY A SURFACE ADJUSTMENT FACTOR OF 1.00011. UNITS: U.S. SURVEY FEET. SURVEY DATE: AUGUST, 2023

2. THIS SURVEY WAS COMPLETED WITH THE BENEFIT OF TITLE REPORT, PROVIDED BY FIRST NATIONAL TITLE INSURANCE COMPANY, GF NO. 24-779573-GT, EFFECTIVE DATE JANUARY 21, 2024, AND ISSUED DATE JANUARY 26, 2024. THERE MAY BE EASEMENTS OR OTHER MATTERS, RECORDED OR UNRECORDED, THAT ARE NOT SHOWN.

3. A PROPERTY DESCRIPTION OF EVEN DATE WAS PREPARED IN CONJUNCTION WITH THIS PARCEL PLAT.

I HEREBY CERTIFY THAT THIS SURVEY WAS MADE ON THE GROUND UNDER MY DIRECTION AND SUPERVISION AND THAT THIS PLAT IS TRUE AND CORRECT TO THE BEST OF MY KNOWLEDGE AND BELIEF.

SCOTT C. BRASHEAR
REGISTERED PROFESSIONAL LAND SURVEYOR
NO. 6660, STATE OF TEXAS

4/5/2024
DATE

STATE OF TEXAS
REGISTERED
SCOTT C. BRASHEAR
6660
PROFESSIONAL
LAND SURVEYOR

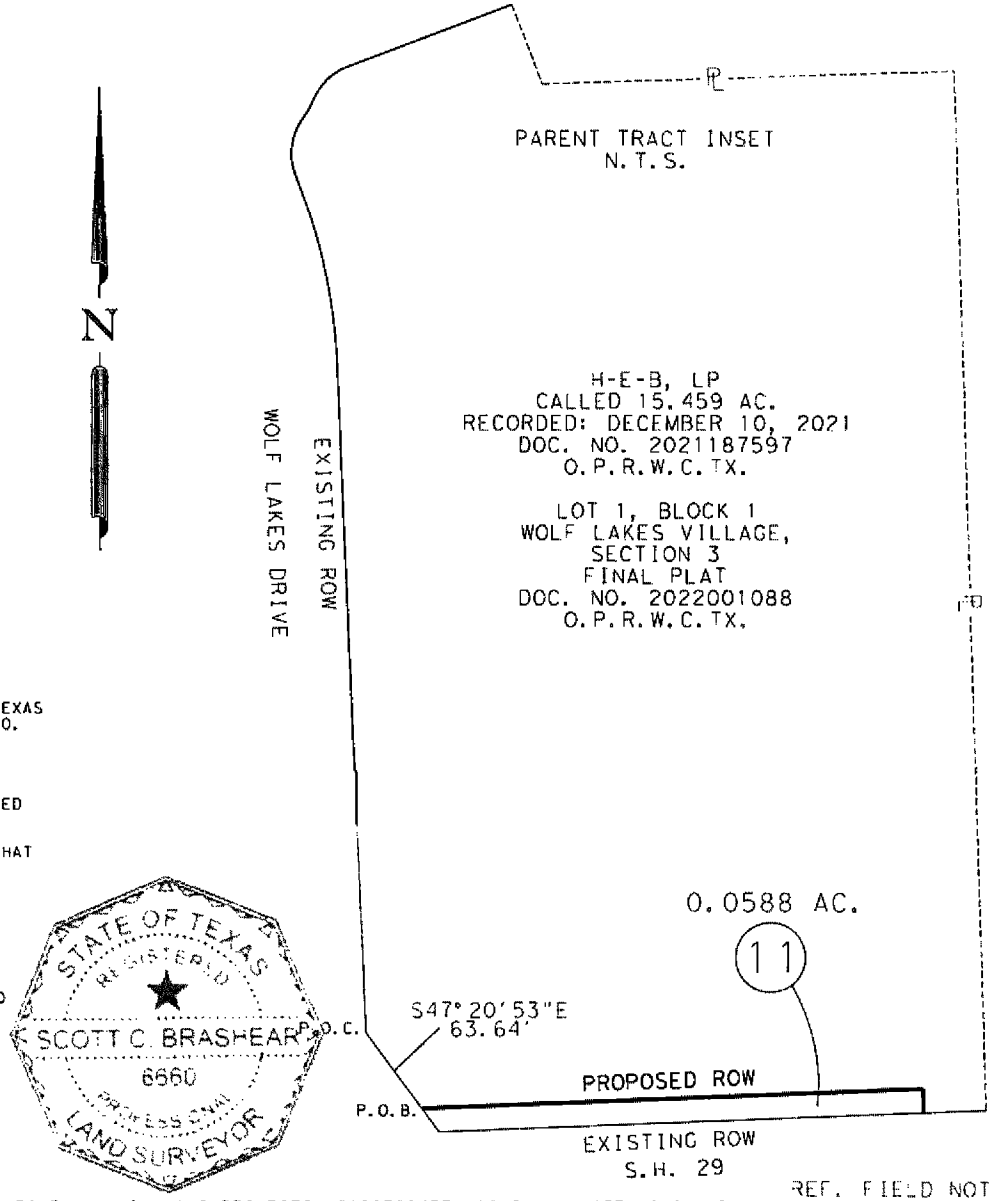

REF. FIELD NOTE NO. 49655

FILE:\\saminc\AUS\PROJECTS\1019052245F\100\Survey\03Exhibits\Parcel 11\SH 29_Parcel 11_2.dgn

EXISTING	15.459 AC.	ACQUIRE	0.0588 AC.	REMAINING	15.4002 AC. LEFT

© 2024

Texas Department of Transportation

SAM
4801 Southwest Parkway
Building Two, Suite 100
Austin, Texas 78735
(512) 447-0575
Fax: (512) 326-3029
Texas Firm Registration No. 10064300

RIGHT-OF-WAY SKETCH
SHOWING PROPERTY OF
H E-B, LP
PARCEL 11
0.0588 AC. (2,561 SQ. FT.)
CSJ NO. 0337-01-053

ELECTRONICALLY RECORDED
OFFICIAL PUBLIC RECORDS

2026014322

Pages: 11 Fee: $61.00
02/24/2026 11:46 AM
KWEEMS



Nancy E. Rister, County Clerk
Williamson County,Texas

PURCHASE AND SALE AGREEMENT

THIS PURCHASE AND SALE AGREEMENT (this "Agreement") is entered into this ___ day of _____, 2026 (the "Effective Date"), by and between the **CITY OF GEORGETOWN**, a Texas home-rule municipal corporation situated in Williamson County, Texas (the "City") and **NNN REIT, LP, a Delaware limited partnership, f/k/a NATIONAL RETAIL PROPERTIES, LP, a Delaware limited partnership** ("Owner"). The City and Owner may be referred to herein individually as a "Party" or collectively as the "Parties".

WHEREAS, Owner owns fee title to a certain tract of land located in the C. Stubblefield Survey, Abstract No. 558, Williamson County, Texas, said tract of land being Lot 5, Final Plat of Wolf Ranch North, as recorded in Document No. 2014031954, Official Public Records of Williamson County, Texas (O.P.R.W.C.TX.) and described in a Deed to National Retail Properties, LP recorded as Document No. 2014035824 O.P.R.W.C.TX. (the "Property");

WHEREAS, the City desires to acquire as right-of-way a 0.0707-acre (3,081 square feet) portion of the Property, such portion being more fully described and depicted in **Exhibit A** attached hereto and incorporated herein (the "Right-of-Way Area"), for the expansion of SH 29, University Avenue (the "Facility") as part of the City's SH 29 Roadway Expansion Project;

WHEREAS, the City and Owner are entering into this Agreement to set forth: (i) the rights and obligations of the City with respect to its acquisition of the Right-Of-Way Area; and (ii) in exchange for the City's agreements set forth in (i), the rights and obligations of Owner as to the conveyance of the Right-of-Way Area to the City; and

WHEREAS, this Agreement is authorized by and consistent with state law, the City's ordinances and regulations.

NOW, THEREFORE, in consideration of the foregoing recitals and the mutual covenants, promises and obligations by the Parties set forth in this Agreement, the Parties agree as follows:

ARTICLE I: PURCHASE AND SALE

A. AGREEMENTS: THE CITY OF GEORGETOWN

Subject to the terms herein set forth, the City hereby agrees as follows:

1. At a closing date and location to be determined, but no later than March 6, 2026 (the "Outside Closing Date"), upon delivery of properly executed Special Warranty Deed, hereinafter defined, the City shall pay to Owner an amount equal to NINETY-SIX THOUSAND AND 00/100 DOLLARS ($96,000.00).

2. The City shall procure a Commitment to provide title insurance (a "Commitment") from a title company within ten (10) business days from the Effective Date of this Agreement and shall promptly identify any objectionable matters of title therein.

3. The City will operate and maintain the Facility as part of its road system for a term deemed necessary by the City. Nothing herein shall be construed to limit or prohibit the City's ability to alter, remodel, rehabilitate, reconstruct, or decommission the Facility.

B. **AGREEMENTS: OWNER**

Subject to the terms herein set forth, Owner hereby agrees as follows:

1. Owner represents and warrant to the City that Owner is the sole Owner in full and complete fee simple title of the Property.

2. Owner further represents and warrant to the City that:
   a. The Right-Of-Way Area is not subject to any liens or encumbrances, except as may be shown in the Commitment.
   b. Owner has full and complete fee simple title to the Right-Of-Way Area, free and clear of all easements, restrictions, conditions, exceptions or reservations, except as may be shown in the Commitment.
   c. There are no lawsuits pending or, to the best of Owner's current actual knowledge without any duty to investigate, threatened, against or involving Owner or the Property.
   d. There is no pending or to the best of Owner's current actual knowledge, without any duty to investigate, threatened claims, condemnations, planned public improvements, annexation, special assessments, zoning or subdivision changes, or other adverse claims affecting the Property.
   e. To the Owner's current actual knowledge, without any duty to investigate, the Property is not being used as a land fill or for the storage or disposal of any hazardous or toxic materials.
   f. There are no third parties in possession of any portion of the Property as lessees, tenants at sufferance, or trespassers; there are no leases, licenses or other agreements relating to the use, occupancy or possession of the Property, except that certain lease between owner and Raising Cane's Restaurants L.L.C., and other matters that may be detailed in the Commitment.
   g. The signatories to this Agreement have the authority to execute this Agreement on the terms herein set forth and to sell, grant and convey to the City the Right-Of-Way Area pursuant hereto.
   h. All representations herein set forth shall expressly survive the conveyance of the Right-Of-Way Area to the City.

3. For the consideration described herein, Owner will convey the Right-Of-Way Area to the City by a Special Warranty Deed in the form attached hereto as **Exhibit B** and by this reference incorporated herein (the "Special Warranty Deed").

ARTICLE II: CLOSING

Closing shall be held at Austin Title, 200 E. 8th Street, Suite 201., Georgetown, Texas 78626 (the "Title Company") no later than March 6, 2026.

A. At closing, Owner shall:
   1. execute and deliver to the City the duly executed and acknowledged Special Warranty Deed.

   2. execute and deliver to the City any notices, statements, certificates, affidavits, releases and other documents required by this Agreement or the Title Company necessary for the closing of the sale in a form reasonably acceptable to Owner.

   3. pay (i) Owner's expenses and attorney fees and (ii) any taxes owed on the Right of Way Area to the date of closing;

B. At closing, the City shall:

   1. pay the City's expenses.

   2. pay all costs associated with the conveyance of the Right-Of-Way Area to the City, except (i) Owner's expenses and attorney fees, and (ii) any taxes owed on the Right of Way Area after the date of closing.

   3. execute and deliver to Owner any notices, statements, certificates, affidavits, releases and other documents required by this Agreement or the Title Company necessary for the Closing of the conveyance.

ARTICLE III: GENERAL PROVISIONS

A. The term of this Agreement will commence upon the Effective Date and continue until recordation of the Special Warranty Deed in the Official Public Records of Williamson County, Texas.

B. At the election and expense of the City, the City may obtain, at its sole cost and expense, an Owner's Title Policy over the Right-Of-Way Area in an amount requested by the City, insuring the City's interest in the Right-Of-Way Area to be good and indefeasible, which policy shall be subject only to the Permitted Exceptions and the standard exceptions to title; provided that: (i) the Owner shall, upon request of City, provide a document sufficient to remove from the policy the exception as to the lease agreement between Owner and Raising Cane's Restaurants L.L.C. in a form reasonably acceptable to Owner and Raising Cane's Restaurants, L.L.C., and (ii) the City may elect to furnish a current on the ground survey and to pay the additional policy premium required to delete the "survey exception" from the policy, to the extent permitted by applicable title insurance rules.

C. In the event the City fails to fully and timely perform any of its obligations under this Agreement or fails to close for any reason except Owner's prior material default prior to the Outside Closing Date, Owner may, as its sole and exclusive remedy, terminate this Agreement.

D. In the event Owner fails to fully and timely perform any of its obligations under this Agreement or fails to close for any reason except the City's prior material default, the City may, as its sole and exclusive remedy, terminate this Agreement.

E. The City is a political subdivision of the State of Texas, and pursuant to Texas Tax Code Section 23.55(f) the conveyance of the Right-Of-Way Area to the City is for a public purpose and will not constitute a change in use that causes any rollback taxes to become due.

F. This Agreement may be modified, amended or terminated as to all or any part of the Property upon the written mutual consent of the Parties.

G. This Agreement shall be construed under and in accordance with the laws of the State of Texas.

H. This Agreement shall be binding upon and inure to the benefit of the Parties and their respective heirs, executors, administrators, legal representatives, successors, and assigns, except as otherwise expressly provided herein.

I. In case any one or more of the provisions contained in this Agreement shall for any reason be held to be invalid, illegal, or unenforceable in any respect, such invalidity, illegality, or unenforceability shall not affect any other provisions thereof, and this Agreement shall be construed as if such invalid, illegal, or unenforceable provision had never been contained herein to the extent such change does not alter the intent of the Agreement.

J. This Agreement supersedes any and all other agreements, either oral or in writing, between the Parties with respect to the subject matter hereof and contains all of the covenants and agreements between the Parties with respect to the subject matter hereof. Each Party acknowledges that no representations, inducements, promises, or agreements, orally or otherwise, have been made by any Party, or anyone acting on behalf of any Party, that are not set forth in this Agreement, and that no agreement, statement, or promise not contained in this Agreement shall be valid or binding.

K. Each Party acknowledges that it has read and understands the effect of this Agreement and executes this Agreement of its own free will and accord for the purposes and considerations set forth herein.

L. It is further understood and expressly agreed that this Agreement was drafted jointly by the Parties, and it is expressly agreed that neither this Agreement nor any of the documents executed in connection with this Agreement shall ever be construed against any Party on the basis of who drafted the documents.

M. Each Party shall do all other acts, or deliver any other instruments or documents required or helpful to be done or delivered, in order to consummate the transaction contemplated hereby.

N. Time is of the essence of this Agreement and each and every provision hereof.

O. Any notice, demand, direction, request, or other instrument authorized or required by this Agreement to be given to or filed with either Party shall be deemed to have been sufficiently given or filed for all purposes if and when personally delivered or sent by certified mail, postage prepaid, return receipt requested, to the address specified below or at such other address as may be designated in writing by the Parties:

Owner: NNN REIT., LP
Attn: Senior Vice President Asset Management
405 South Orange Avenue, Ste 900
Orlando, FL 32801

City: City of Georgetown
Attn: City Manager
P. O. Box 409
Georgetown, TX 78627

For overnight mail or personal delivery:

808 Martin Luther King, Jr. St.
Georgetown, TX 78626

P. Exhibits:

1. Exhibit A – Right-Of-Way Area Survey
2. Exhibit B – Special Warranty Deed

Q. Each Party represents and warrants to the other Party that it has the full right, power, and authority to enter into and perform its obligations under this Agreement. This Agreement was authorized by the City Council of the City of Georgetown, Texas, on July 23, 2024, as indicated by signature of the City's representatives to this Agreement.

R. In the event either Party fails to fully and timely perform any of its obligations under this Agreement or fails to close for any reason except the other Party's prior material default, the other Party may, as its sole and exclusive remedy, terminate this Agreement.

[signature pages follow]

This Agreement is executed by the Parties to be effective as of the Effective Date.

GRANTOR: TWH RBS MK

NNN REIT, LP
a Delaware limited partnership

By: NNN GP Corp.,
a Delaware corporation,
Its: General Partner

By: _____

Name: Gina M. Steffens

Title: Executive Vice President

THE STATE OF FLORIDA §
§
COUNTY OF ORANGE §

The foregoing instrument was acknowledged before me by means of ☑ physical presence or ☐ online notarization, this 3rd day of March, 2026, by Gina M. Steffens, as Executive Vice President of NNN GP Corp., a Delaware corporation, on behalf of said corporation, in its capacity as the General Partner of NNN REIT, LP, a Delaware limited partnership, on behalf of said limited partnership.

_____
Notary Public, State of FLORIDA
Ivette Cordero

IVETTE CORDERO
Commission # HH 365509
Expires April 3, 2027

CITY OF GEORGETOWN,
a Texas home-rule municipal corporation

By: _____
David Morgan, City Manager

THE STATE OF TEXAS §
§
COUNTY OF WILLIAMSON §

This instrument was acknowledged before me on this 2nd day of March 2026, by David Morgan, as the City Manager of the City of Georgetown, a Texas home-rule municipal corporation, on behalf of said corporation.

Shannon Biddle
My Commission Expires
9/26/2026
Notary ID133982902

_____
Notary Public, State of Texas

APPROVED AS TO FORM:

By: _____
Andrew Culpepper, Assistant City Attorney

ELECTRONICALLY RECORDED 2025017577
Williamson County, Texas Total Pages: 10

AUSTIN TITLE COMPANY

GF# 1701342400747

GENERAL WARRANTY DEED

NOTICE OF CONFIDENTIALITY RIGHTS: If you are a natural person, you may remove or strike any of the following information from this instrument before it is filed for record in the public records: Your social security number or your driver's license number.

DATE: 11-6, 2024

GRANTOR: Batey Charolais, Inc., a Montana corporation

GRANTOR'S MAILING ADDRESS:

1026 Ludwig Lane,
Bozeman, Gallatin County, MT 59718

GRANTEE: City of Georgetown, a Texas home-rule municipal corporation

GRANTEE'S MAILING ADDRESS (including County):

P.O. Box 409,
Georgetown, Williamson County, Texas 78627

CONSIDERATION: Ten and No/100 Dollars ($10.00) and other good and valuable consideration.

PROPERTY (including any improvements):

Being a 0.0228-acre tract of land, more or less, said tract being more fully described in **Exhibit "A"** and depicted in **Exhibit "B"**, each being attached hereto and by this reference incorporated herein (the "Property").

RESERVATIONS FROM AND EXCEPTIONS TO CONVEYANCE AND WARRANTY:

This conveyance is made, delivered and accepted subject to any and all easements, covenants, leases, rights-of-way, conditions, restrictions, outstanding mineral interests and royalty interests, if any, relating to the Property, to the extent, and only to the extent, that the same may still be in force and effect and shown in the Official Public Records of Williamson County, Texas.

Grantor, for the consideration and subject to the Reservations from and Exceptions to Conveyance and Warranty, GRANTS, SELLS, and CONVEYS to Grantee the Property, together with all and singular the rights and appurtenances thereto in any way belonging, to have and hold it to Grantee and Grantee's heirs, successors and assigns forever. Grantor

Unofficial Document

binds Grantor and Grantor's heirs, successors and assigns to warrant and forever defend all and singular the Property to Grantee and Grantee's heirs, successors, and assigns against every person whomsoever lawfully claiming or to claim the same or any part thereof, except as to the Reservations from and Exceptions to Conveyance and Warranty.

GRANTOR:

Batey Charolais, Inc.
a Montana corporation

By: Dee Batey

Name: Dee Batey

Title: Pres.

THE STATE OF Montana §
§
COUNTY OF Gallatin §

This instrument was acknowledged before me on this, the 6th day of November, 2024, by (name) Dee Batey, (title) President of Batey Charolais, Inc., a Montana corporation, on behalf of said corporation.

BETTY JO WEAVER
Notary Public
for the State of Montana
Residing at:
Belgrade, Montana
My Commission Expires.
January 9, 2025

BETTY JO WEAVER NOTARIAL SEAL STATE OF MONTANA

Betty Jo Weaver
Notary Public, State of Montana

APPROVED AS TO FORM:

Andrew Culpepper, Assistant City Attorney

AFTER RECORDING RETURN TO:
City of Georgetown
Attn: Real Estate Services
P.O. Box 409
Georgetown, Texas 78627

Unofficial Document

binds Grantor and Grantor's heirs, successors and assigns to warrant and forever defend all and singular the Property to Grantee and Grantee's heirs, successors, and assigns against every person whomsoever lawfully claiming or to claim the same or any part thereof, except as to the Reservations from and Exceptions to Conveyance and Warranty.

GRANTOR:

Batey Charolais, Inc.
a Montana corporation

By: Dee Batey

Name: Dee Batey

Title: Pres.

THE STATE OF Montana §
§
COUNTY OF Gallatin §

This instrument was acknowledged before me on this, the 6th day of November, 2024, by (name) Dee Batey (title) President of Batey Charolais, Inc., a Montana corporation, on behalf of said corporation.

BETTY JO WEAVER
Notary Public
for the State of Montana
Residing at
Belgrade, Montana
My Commission Expires:
January 9, 2025

BETTY JO WEAVER NOTARIAL SEAL STATE OF MONTANA

Betty Jo Weaver
Notary Public, State of Montana

APPROVED AS TO FORM:

Andrew Culpepper
Andrew Culpepper, Assistant City Attorney

AFTER RECORDING RETURN TO:
City of Georgetown
Attn: Real Estate Services
P.O. Box 409
Georgetown, Texas 78627

Unofficial Document

EXHIBIT "A"

County: Williamson
Highway: S.H. 29
Limits: From 0.161 Miles West of Wolf Ranch Parkway To I.H. 35
CCSJ: 0337-01-053
Parcel No.: 14

PROPERTY DESCRIPTION FOR PARCEL 14

DESCRIPTION OF A 0.0228 ACRE (993 SQ. FT.) PARCEL OF LAND LOCATED IN THE C. STUBBLEFIELD SURVEY, ABSTRACT NO. 558, WILLIAMSON COUNTY, TEXAS, BEING A PORTION OF LOT 2A, AMENDED FINAL PLAT OF LOTS 2 AND 3, WOLF RANCH NORTH, AS RECORDED IN DOCUMENT NO. 2014074726, OFFICIAL PUBLIC RECORDS OF WILLIAMSON COUNTY, TEXAS (O.P.R.W.C.TX.), DESCRIBED IN A DEED TO BATEY CHAROLAIS, INC., RECORDED OCTOBER 7, 2022 IN DOCUMENT NO. 2022116358, O.P.R.W.C.TX., SAID 0.0228 ACRE (993 SQ. FT.) PARCEL, AS SHOWN ON A PLAT PREPARED BY SAM, LLC, BEING MORE PARTICULARLY DESCRIBED BY METES AND BOUNDS AS FOLLOWS:

COMMENCING at a 5/8-inch iron rod found 439.08 feet left of State Highway (S.H.) 29 Engineer's Centerline Station (E.C.S.) 173+37.19 on the existing west right-of-way line of Wolf Lakes Drive, a variable width right-of-way, described to the City of Georgetown in Document No. 2004068070, O.P.R.W.C.TX., for the most northerly northeast corner of Lot 5, Final Plat of Wolf Ranch North, as recorded in Document No. 2014031954, O.P.R.W.C.TX., described in a deed to National Retail Properties, LP, recorded in Document No. 2014035824, O.P.R.W.C.TX.;

THENCE, South 67°37'31" West, departing the existing west right-of-way line of said Wolf Lakes Drive, with the north line of said Lot 5, a distance of **178.41 feet** to a calculated point, for the northwest corner of said Lot 5, same being the northeast corner of Lot 4, Final Plat of Wolf Ranch North, as recorded in Document No. 2014031954, O.P.R.W.C.TX., described in a deed to HZ Props Re, Ltd., recorded in Document No. 2014058684, O.P.R.W.C.TX.;

THENCE, **South 67°23'38" West**, departing the north line of said Lot 5, with the north line of said Lot 4, a distance of **98.53 feet** to a calculated point, for the northwest corner of said Lot 4, same being the northeast corner of said Lot 2A;

THENCE, South 02°20'53" East, departing the north line of said Lot 4, with the west line of said Lot 4 and the east line of said Lot 2A, a distance of **277.87 feet** to a 5/8-inch iron rod with a 2-inch aluminum cap stamped "Texas Department of Transportation (TXDOT)" set (Surface Coordinates: N=10,204,965.10, E=3,125,998.06) 66.00 feet left of S.H. 29 E.C.S. 170+77.15 on the proposed north right-of-way line of S.H. 29, for the northeast corner and **POINT OF BEGINNING** of the parcel described herein;

1) **THENCE**, **South 02°20'53" East**, departing the proposed north right-of-way line of said S.H. 29, continuing along the common line of said Lot 4 and said Lot 2A, a distance of **5.00 feet** to a 5/8-inch iron rod with a yellow plastic cap found disturbed on the existing north right-of-way line of S.H. 29, a variable width right-of-way, described to the State of Texas in Document No. 2006006974, O.P.R.W.C.TX., and depicted in TXDOT R.O.W. Strip Map CSJ No. 0337-01-023, for the southwest corner of said Lot 4, same being the southeast corner of said Lot 2A and of the parcel described herein;

2) **THENCE**, **South 87°39'07" West**, departing the common line of said Lot 4 and said Lot 2A, with the existing north right-of-way line of said S.H. 29, a distance of **198.51 feet** to a cotton spindle with a shiner stamped "Chaparral Boundary" found, for the southeast corner of Lot 1, Final Plat of Wolf Ranch North, as recorded in Document No. 2014031954, O.P.R.W.C.TX., described in a deed to Lighthouse Farm LLC, recorded in Document No. 2022106575, O.P.R.W.C.TX., same being the southwest corner of said Lot 2A and of the parcel described herein,

3) **THENCE**, **North 02°20'53" West**, departing the existing north right-of-way line of said S.H. 29, with the east line of said Lot 1 and the west line of said Lot 2A, a distance of **5.00 feet** to a 5/8-inch iron rod with a 2-inch aluminum cap stamped "TXDOT" set 66.00 feet left of S.H. 29 E.C.S. 168+78.64 on the proposed north right-of-way line of said S.H. 29, for the northwest corner of the parcel described herein;

Unofficial Document

EXHIBIT "A"

County: Williamson
Highway: S.H. 29
Limits: From 0.161 Miles West of Wolf Ranch Parkway To I.H. 35 April 5, 2024
CCSJ: 0337-01-053
Parcel No.: 14

4) **THENCE**, **North 87°39'07" East**, departing the common line of said Lot 1 and said Lot 2A, with the proposed north right-of-way line of said S.H. 29, over and across said Lot 2A, a distance of **198.51 feet** to the **POINT OF BEGINNING**, and containing 0.0228 acres (993 sq. ft.) of land.

Bearing Basis:
All bearings shown are based on NAD83/2011 Texas Coordinate System, Central Zone (4203). All distances shown are surface and may be converted to grid by dividing by a Surface Adjustment Factor of 1.00011. All coordinates shown are in surface and may be converted by dividing by the same factor. Project units are in U.S. Survey Feet.

THE STATE OF TEXAS §
§ KNOW ALL MEN BY THESE PRESENTS:
COUNTY OF TRAVIS §

That I, Scott C. Brashear, a Registered Professional Land Surveyor, do hereby certify that the above description is true and correct to the best of my knowledge and belief and that the property described herein was determined by a survey made on the ground under my direction and supervision.

WITNESS MY HAND AND SEAL at Austin, Travis County, Texas, on the date shown below.

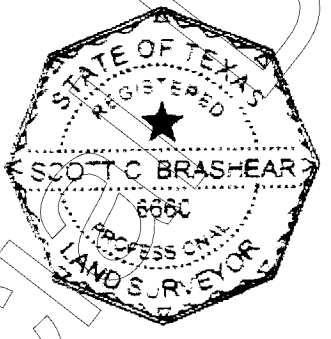

SURVEYING AND MAPPING, LLC
4801 Southwest Pkwy
Building Two, Suite 100
Austin, Texas 78735
TX. Firm No. 10064300

Scott C. Brashear 4/5/2024
Scott C. Brashear Date
Registered Professional Land Surveyor
No. 6660 – State of Texas

Unofficial Document

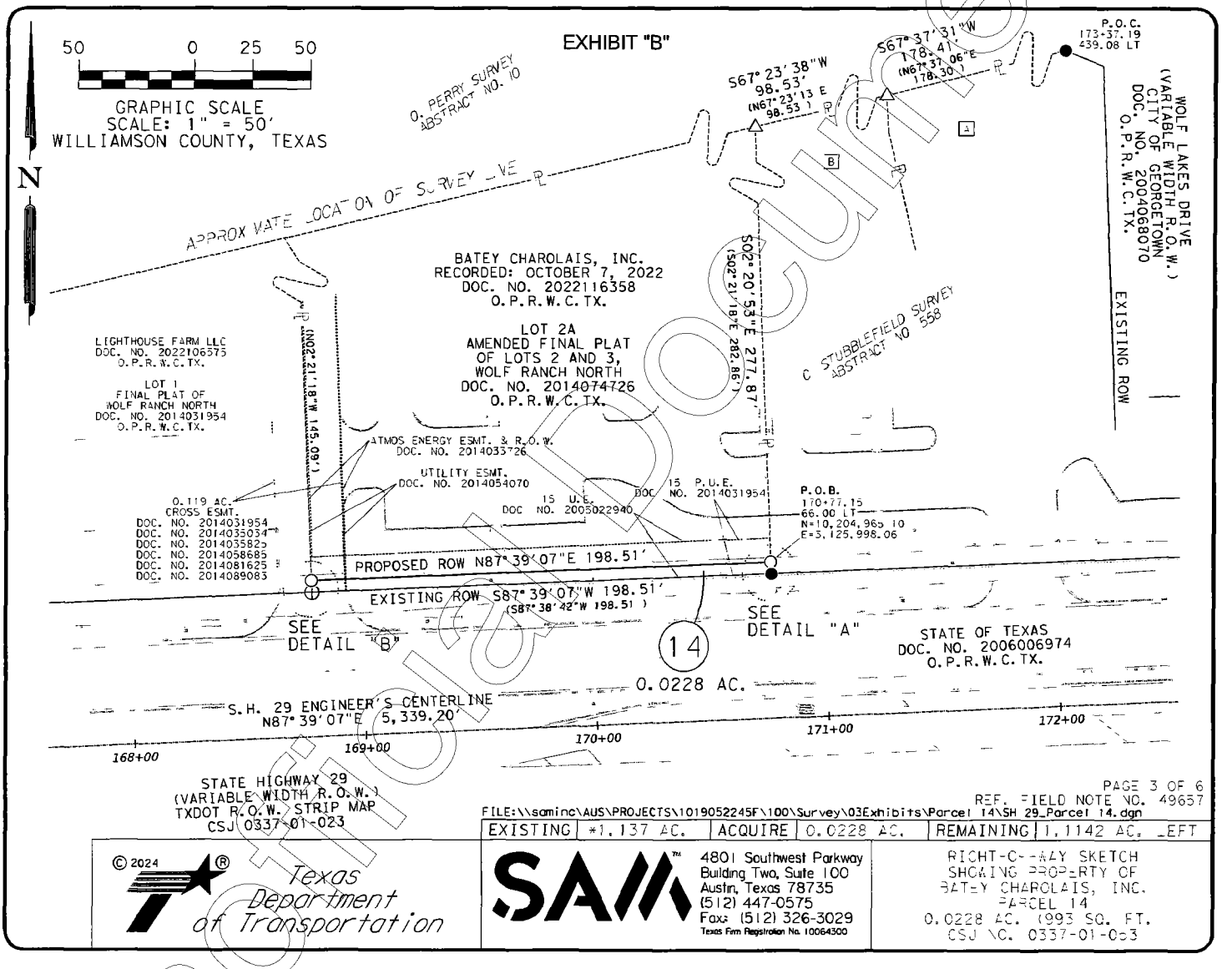

Unofficial Document

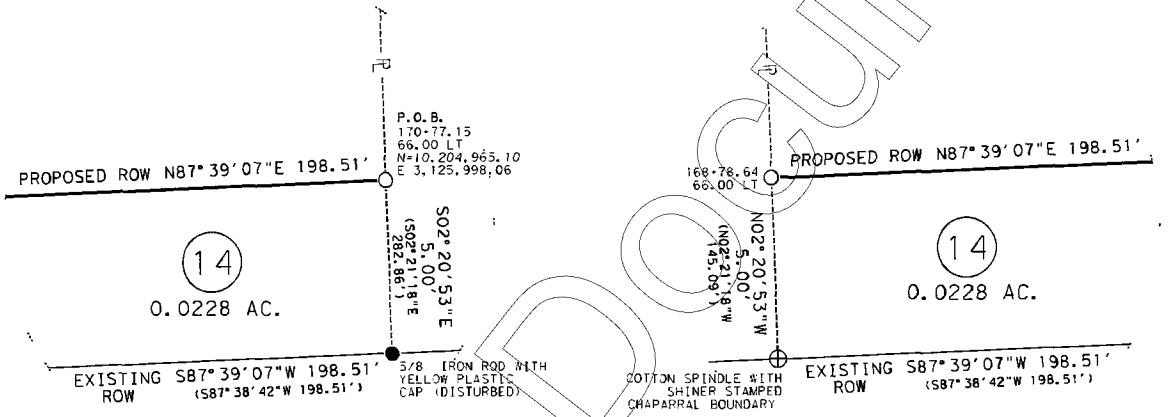

PAGE 4 OF 6
REF. FIELD NOTE NO. 49657
FILE:\\saminc\AUS\PROJECTS\1019052245F\100\Survey\03Exhibits\Parcel 14\SH 29_Parcel 14.dgn

EXISTING	1.137 AC.	ACQUIRE	0.0228 AC.	REMAINING	1.1142 AC. LEFT

© 2024

Texas Department of Transportation

SAM™
4801 Southwest Parkway
Building Two, Suite 100
Austin, Texas 78735
(512) 447-0575
Fax: (512) 326-3029
Texas Firm Registration No. 10064300

RIGHT-OF-WAY SKETCH
SHOWING PROPERTY OF
BATEY CHARCLAIS, INC
PARCEL 14
0.0228 AC. (993 SQ. FT.
CSJ NO. 033-01-053

Unofficial Document

SCHEDULE B:

THIS SURVEY HEREON WAS PREPARED IN CONJUCTION WITH THAT COMMITMENT FOR TITLE INSURANCE GF NO. 24-779646-GT, ISSUED BY FIRST NATIONAL TITLE INSURANCE COMPANY, EFFECTIVE DATE JANUARY 25, 2024, AND ISSUED DATE FEBRUARY 5, 2024.

10. THE FOLLOWING MATTERS AND ALL TERMS OF THE DOCUMENTS CREATING OR OFFERING EVIDENCE OF THE MATTERS (WE MUST INSERT MATTERS OR DELETE THIS EXCEPTION.):

A. ALL LEASES, GRANTS, EXCEPTIONS OR RESERVATIONS OF COAL, LIGNITE, OIL, GAS AND OTHER MINERALS, TOGETHER WITH ALL RIGHTS, PRIVILEGES AND IMMUNITIES RELATING THERETO, APPEARING IN THE PUBLIC RECORDS WHETHER LISTED IN SCHEDULE B OR NOT. THERE MAY BE LEASES, GRANTS, EXCEPTIONS OR RESERVATIONS OF MINERAL INTEREST THAT ARE NOT LISTED.

B. ALL LEASES, GRANTS, EXCEPTIONS OR RESERVATIONS OF THE GEOTHERMAL ENERGY AND ASSOCIATED RESOURCES BELOW THE SURFACE OF THE LAND, TOGETHER WITH ALL RIGHTS, PRIVILEGES, AND IMMUNITIES RELATING THERETO, APPEARING IN THE PUBLIC RECORDS WHETHER LISTED IN SCHEDULE B OR NOT. THERE MAY BE LEASES, GRANTS, EXCEPTIONS OR RESERVATIONS OF THE GEOTHERMAL ENERGY AND ASSOCIATED RESOURCES BELOW THE SURFACE OF THE LAND THAT ARE NOT LISTED.

C. ALL VISIBLE AND APPARENT EASEMENTS OR USES AND ALL UNDERGROUND EASEMENTS OR USES, THE EXISTENCE OF WHICH MAY ARISE BY UNRECORDED GRANT OR BY USE.

D. RIGHTS OF PARTIES IN POSSESSION.

E. RIGHTS OF TENANTS, AS TENANTS ONLY, UNDER UNRECORDED LEASES OR RENTAL AGREEMENTS.

F. THE FOLLOWING EASEMENT(S) AND/OR BUILDING LINE(S) AFFECTING THE SUBJECT PROPERTY AS SHOWN ON MAP OR PLAT RECORDED IN DOCUMENT NO. 2014074726, MAP OR PLAT RECORDS, WILLIAMSON COUNTY, TEXAS:

A 15 FOOT PUBLIC UTILITY EASEMENT ALONG THE SOUTH PROPERTY LINE. (AFFECTS PARCEL AS SHOWN)

A CROSS EASEMENT ALONG THE WEST PROPERTY LINE. (AFFECTS PARCEL AS SHOWN)

G. EASEMENT AND RIGHT OF WAY GRANTED TO ATMOS ENERGY CORPORATION, RECORDED IN DOCUMENT NO. 2014033726, REAL PROPERTY RECORDS, WILLIAMSON COUNTY, TEXAS. (AFFECTS PARCEL AS SHOWN)

H. A UTILITY EASEMENT GRANTED TO THE STATE OF TEXAS AND THE CITY OF GEORGETOWN, RECORDED IN DOCUMENT NO. 2005022940, REAL PROPERTY RECORDS, WILLIAMSON COUNTY, TEXAS. (AFFECTS PARCEL AS SHOWN)

I. EASEMENT(S), GRANTED TO TEXAS POWER & LIGHT COMPANY, RECORDED IN VOLUME 280, PAGE 541 AND VOLUME 337, PACIE 255, OFFICIAL PUBLIC RECORDS OF WILLIAMSON COUNTY, TEXAS. (MAY AFFECT)

J. EASEMENT, GRANTED TO CHISHOLM TRAIL WSC, RECORDED IN VOLUME 998, PAGE 389, OFFICIAL PUBLIC RECORDS OF WILLIAMSON COUNTY, TEXAS, AND TRANSFERRED TO CHISHOLM TRAIL SPECIAL UTILITY DISTRICT RECORDED IN VOLUME 2168, PAGE 44, OFFICIAL PUBLIC RECORDS OF WILLIAMSON COUNTY, TEXAS. (MAY AFFECT)

K. TERMS, CONDITIONS AND PROVISIONS OF THAT CERTAIN CROSS EASEMENT AND NON-BARRIER AGREEMENT DATED OCTOBER 19, 2011, BY AND BETWEEN SIMON RIVERHILLS, L.P. AND IVA WOLF MCLACHLAN, RECORDED UNDER DOCUMENT NO. 2011070961, OFFICIAL PUBLIC RECORDS, WILLIAMSON COUNTY, TEXAS AND SHOWN ON PLATS RECORDED UNDER DOCUMENT NO. 2014031954 AND DOCUMENT NO. 2014074726, OFFICIAL PUBLIC RECORDS, WILLIAMSON COUNTY, TEXAS. (DOES NOT AFFECT)

L. UTILITY EASEMENT AS CREATED IN POSSESSION AND USE AGREEMENT FOR TRANSPORTATION PURPOSES DATED AUGUST 27, 2004, RECORDED UNDER DOCUMENT NO. 2005002365, AND IN INSTRUMENT DATED NOVEMBER 15, 2005, GRANTED BY IVA WOLF MCLACHLAN TO CITY OF GEORGETOWN, RECORDED UNDER DOCUMENT NO. 2005095825, OFFICIAL PUBLIC RECORDS, WILLIAMSON COUNTY, TEXAS AND SHOWN ON PLATS RECORDED UNDER DOCUMENT NO. 2014031954 AND DOCUMENT NO. 2014074726, OFFICIAL PUBLIC RECORDS, WILLIAMSON COUNTY, TEXAS. (DOES NOT AFFECT)

M. POLLUTION ABATEMENT PLAN FILED MARCH 11, 1996, RECORDED IN DOCUMENT NO. 1996012319, OFFICIAL PUBLIC RECORDS OF WILLIAMSON COUNTY, TEXAS. (MAY AFFECT)

N. EDWARDS AQUIFER PROTECTION PLAN RECORDED IN DOCUMENT NO. 2013092211 AND DOCUMENT NO. 2013092213, OFFICIAL PUBLIC RECORDS OF WILLIAMSON COUNTY, TEXAS. (MAY AFFECT)

O. EACH DECLARANT GRANTS TO OTHER DECLARANTS FOR THE USE OF THEIR MUTUAL USE, AND FOR THE USE OF THEIR RESPECTIVE SUCCESSORS, ASSIGNS, PERMITTEES AND INVITEES, A PERMANENT NON-EXCLUSIVE CROSS ACCESS EASEMENT AS SET OUT IN RESTRICTIONS RECORDED UNDER DOCUMENT NO. 2014035034, OFFICIAL PUBLIC RECORDS, WILLIAMSON COUNTY, TEXAS. (AFFECTS PARCEL AS SHOWN)

P. EASEMENT(S), AS PROVIDED THEREIN, GRANTED TO CITY OF GEORGETOWN, RECORDED UNDER DOCUMENT NO. 2014054070, OFFICIAL PUBLIC RECORDS, WILLIAMSON COUNTY, TEXAS. (AFFECTS PARCEL AS SHOWN)

Q. DEVELOPER CREATES, GRANTS AND CONVEYS TO OWNER, ITS TENANTS, LICENSEES AND INVITEES, A PERMANENT, NON-EXCLUSIVE EASEMENT IN COMMON WITH DEVELOPER AND ALL OTHERS TO WHOM RIGHTS HAVE BEEN GRANTED OR MAY HEREAFTER OBTAIN RIGHTS, TO TIE INTO, DISCHARGE SURFACE AND/OR STORM WATER INTO AND OTHERWISE MAKE USE OF FOR ITS INTENDED PURPOSES, THE STORM WATER DETENTION SYSTEM AS SET OUT IN RESTRICTIONS RECORDED UNDER DOCUMENT NO. 2014035825, DOCUMENT NO. 2014058685 AND DOCUMENT NO. 2014081625, OFFICIAL PUBLIC RECORDS, WILLIAMSON COUNTY, TEXAS. (MAY AFFECT)

R. MAINTENANCE CHARGE TO DEVELOPER AND PROVISION FOR A LIEN TO BE FILED FOR NON-PAYMENT AS SET OUT IN RESTRICTIONS RECORDED UNDER DOCUMENT NO. 2014097954 OFFICIAL PUBLIC RECORDS, WILLIAMSON COUNTY, TEXAS. (DOES NOT AFFECT PARCEL)

S. DEVELOPER'S REPURCHASE RIGHT AS SET OUT IN RESTRICTIONS RECORDED UNDER DOCUMENT NO. 2014097954 OFFICIAL PUBLIC RECORDS, WILLIAMSON COUNTY, TEXAS. (MAY AFFECT)

T. OIL, GAS AND OTHER MINERALS RESERVED BY GRANTOR AS SET OUT IN DEED DATED DECEMBER 8, 2014, EXECUTED BY IVA WOLF MCLACHLAN (GRANTOR) TO NET3 (GEORGETOWN II) LLC (GRANTEE), RECORDED UNDER DOCUMENT NO. 2014097950, OFFICIAL PUBLIC RECORDS, WILLIAMSON COUNTY, TEXAS, AND ALL RIGHTS INCIDENT THERETO. TITLE TO SAID INTEREST NOT CHECKED SUBSEQUENT TO DATE OF AFORESAID INSTRUMENT. (MAY AFFECT)

U. UNRECORDED LEASE DATED AUGUST 8, 2014, BY AND BETWEEN NET3 (GEORGETOWN II), LLC (LANDLORD) AND TEXAS RESTAURANT GROUP, INC. (TENANT), AND SUBORDINATION, NON-DISTURBANCE AND ATTORNMENT AGREEMENT, RECORDED UNDER DOCUMENT NO. 2014097953, OFFICIAL PUBLIC RECORDS, WILLIAMSON COUNTY, TEXAS. (MAY AFFECT)

PAGE 5 OF 6
REF. FIELD NOTE NO. 49657
FILE:\\saminc\AUS\PROJECTS\1019052245F\100\Survey\03Exhibits\Parcel 14\SH 29_Parcel 14.dgn

EXISTING	±1.137 AC.	ACQUIRE	0.0228 AC.	REMAINING	1.1142 AC.

© 2024

Texas Department of Transportation

SAM™
4801 Southwest Parkway
Building Two, Suite 100
Austin, Texas 78735
(512) 447-0575
Fax: (512) 326-3029
Texas Firm Registration No. 10064300

RIGHT-OF-WAY SKETCH
SHOWING PROPERTY OF
BATEY CHARCLAIS, INC
-PARCEL 14
0.0228 AC. (993 SQ. FT.)
CSJ NO. 033-01-053

Unofficial Document

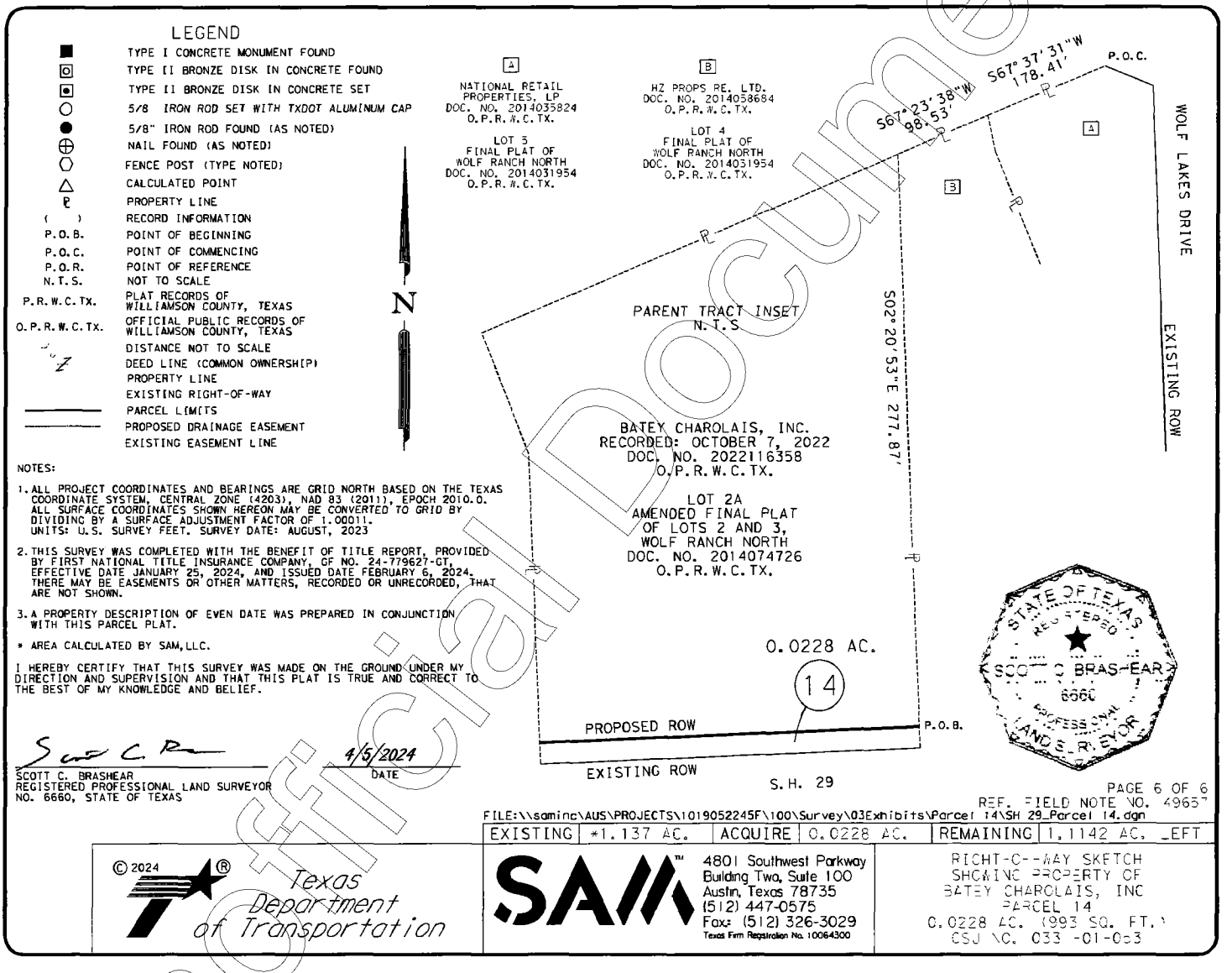

NOTES:

1. ALL PROJECT COORDINATES AND BEARINGS ARE GRID NORTH BASED ON THE TEXAS COORDINATE SYSTEM, CENTRAL ZONE (4203), NAD 83 (2011), EPOCH 2010.0. ALL SURFACE COORDINATES SHOWN HEREON MAY BE CONVERTED TO GRID BY DIVIDING BY A SURFACE ADJUSTMENT FACTOR OF 1.00011. UNITS: U.S. SURVEY FEET. SURVEY DATE: AUGUST, 2023
2. THIS SURVEY WAS COMPLETED WITH THE BENEFIT OF TITLE REPORT, PROVIDED BY FIRST NATIONAL TITLE INSURANCE COMPANY, GF NO. 24-779627-GT, EFFECTIVE DATE JANUARY 25, 2024, AND ISSUED DATE FEBRUARY 6, 2024. THERE MAY BE EASEMENTS OR OTHER MATTERS, RECORDED OR UNRECORDED, THAT ARE NOT SHOWN.
3. A PROPERTY DESCRIPTION OF EVEN DATE WAS PREPARED IN CONJUNCTION WITH THIS PARCEL PLAT.

* AREA CALCULATED BY SAM, LLC.

I HEREBY CERTIFY THAT THIS SURVEY WAS MADE ON THE GROUND UNDER MY DIRECTION AND SUPERVISION AND THAT THIS PLAT IS TRUE AND CORRECT TO THE BEST OF MY KNOWLEDGE AND BELIEF.

Scott C. Brashear 4/5/2024

SCOTT C. BRASHEAR
REGISTERED PROFESSIONAL LAND SURVEYOR
NO. 6660, STATE OF TEXAS

DATE

PAGE 6 OF 6
REF. FIELD NOTE NO. 49657

FILE:\\saminc\AUS\PROJECTS\1019052245F\100\Survey\03Exhibits\Parcel 14\SH 29_Parcel 14.dgn

EXISTING	*1.137 AC.	ACQUIRE	0.0228 AC.	REMAINING	1.1142 AC. LEFT

© 2024

Texas Department of Transportation

SAM™
4801 Southwest Parkway
Building Two, Suite 100
Austin, Texas 78735
(512) 447-0575
Fax: (512) 326-3029
Texas Firm Registration No. 10064300

RIGHT-OF-WAY SKETCH
SHOWING PROPERTY OF
BATEY CHAROLAIS, INC
PARCEL 14
0.0228 AC. (993 SQ. FT.)
CSJ NO. 033-01-003

Unofficial Document

ELECTRONICALLY RECORDED
OFFICIAL PUBLIC RECORDS

2025017577

Pages: 10 Fee: $57.00
03/11/2025 10:31 AM
PKINNE



Nancy E. Rister, County Clerk
Williamson County,Texas

Unofficial Document

ELECTRONICALLY RECORDED 2025078382
Williamson County, Texas Total Pages: 10

AUSTIN TITLE COMPANY

GF# 170/342400743

(Space Above this line for recorders use)

SPECIAL WARRANTY DEED

STATE OF TEXAS §
§ KNOW ALL PERSONS BY THESE PRESENTS:
COUNTY OF WILLIAMSON §

THAT, **Lighthouse Farm, LLC an Arkansas limited liability company** ("**Grantor**,"), for and in consideration of One Dollar ($1.00) and other good and valuable consideration paid in cash to the Grantor by the Grantee herein named, has GRANTED, BARGAINED, SOLD AND CONVEYED and by these presents does hereby GRANT, BARGAIN, SELL AND CONVEY unto CITY OF GEORGETOWN("**Grantee**"), all that certain tract or parcel of land in Williamson County, Texas, described as:

> Being a 0.0308-acre tract of land, more or less, said parcel being more fully described in **Exhibit "A"** and depicted in **Exhibit "B"**, each being attached hereto and by this reference incorporated herein (the "Property").

THIS CONVEYANCE IS MADE BY GRANTOR AND ACCEPTED BY GRANTEE subject to all valid and subsisting encumbrances, conditions, covenants, restrictions, reservations, exceptions, rights of way and easements appearing of record in the Official Public Records of Williamson County, Texas, but only to the extent the same are applicable to the Property and enforceable against the Grantee.

Access onto and off Grantor's remaining property, and across the 1,340 square foot tract of land described in attached Exhibit A to and from the State Highway 29 shall be permitted.

TO HAVE AND TO HOLD the Property, together with all and singular the rights and appurtenances thereto in any way belonging, unto Grantee and Grantee's successors and assigns forever. Grantor hereby binds Grantor, and Grantor's heirs and successors, to warrant and forever defend all and singular the Property unto Grantee, and Grantee's successors and assigns against every person whomsoever lawfully claiming or to claim the same or any part thereof by, through or under Grantor, but not otherwise, save and except the reservations from conveyance and the exceptions to conveyance and warranty described above.

When the context requires, singular nouns and pronouns include the plural.

IN WITNESS WHEREOF, the Grantor herein has executed this Special Warranty Deed, to be effective as of the 14th day of March, 2025.

GRANTOR:

Lighthouse Farm, LLC, an Arkansas limited liability company

BY: _____

Printed Name: Hai Nguyen

Title: Manager

Date: 03/14/2025

Corporate Acknowledgment

State of Arkansas
County of ~~Crawford~~ Sebastian .

This instrument was acknowledged before me on 3/14/25 by Hai Nguyen,

Manager of Lighthouse Farm, LLC , a _____

, on behalf of said entity.

The acknowledging person personally appeared by:

☒ physically appearing before me.

☐ appearing by an interactive two-way audio and video communication that meets the requirements for online notarization under Texas Government Code, Chapter 406, Subchapter C.

OFFICIAL SEAL
LYNDSEY STRICKLIN
NOTARY PUBLIC ARKANSAS
SEBASTIAN COUNTY
COMMISSION# 12718227
COMMISSION EXP 02/08/2032

Lyndsey Stricklin
Notary Public's Signature

GRANTEE:

City of Georgetown,
a Texas home-rule municipal corporation

By: _____
David Morgan, City Manager

STATE OF TEXAS §
§
COUNTY OF WILLIAMSON §

This instrument was acknowledged before me on this the 18th day of September, 2025, by David Morgan, City Manager of the City of Georgetown, a Texas home-rule municipal corporation, on behalf of said corporation.

Shannon Biddle
My Commission Expires
9/26/2026
Notary ID133982902

_____
Notary Public, State of Texas

APPROVED AS TO FORM:

_____
Andrew Culpepper, Assistant City Attorney

AFTER RECORDING, RETURN TO:
City of Georgetown
Attn: Real Estate Services
P.O. Box 409
Georgetown, Texas 78627

EXHIBIT "A"

County: Williamson
Highway: S.H. 29
Limits: From 0.161 Miles West of Wolf Ranch Parkway To I.H. 35
CCSJ: 0337-01-053
Parcel No.: 15

April 5, 2024

PROPERTY DESCRIPTION FOR PARCEL 15

DESCRIPTION OF A 0.0308 ACRE (1,340 SQ. FT.) PARCEL OF LAND LOCATED IN THE C. STUBBLEFIELD SURVEY, ABSTRACT NO. 558, WILLIAMSON COUNTY, TEXAS, BEING A PORTION OF LOT 1, FINAL PLAT OF WOLF RANCH NORTH, AS RECORDED IN DOCUMENT NO. 2014031954, OFFICIAL PUBLIC RECORDS OF WILLIAMSON COUNTY, TEXAS (O.P.R.W.C.TX.), DESCRIBED IN A DEED TO LIGHTHOUSE FARM LLC, RECORDED SEPTEMBER 12, 2022 IN DOCUMENT NO. 2022106575, O.P.R.W.C.TX., SAID 0.0308 ACRE (1,340 SQ. FT.) PARCEL, AS SHOWN ON A PLAT PREPARED BY SAM, LLC, BEING MORE PARTICULARLY DESCRIBED BY METES AND BOUNDS AS FOLLOWS:

COMMENCING at a 5/8-inch iron rod with an aluminum cap stamped "Texas Department of Transportation (TXDOT)" found 76.00 feet left of State Highway (S.H.) 29 Engineer's Centerline Station (E.C.S.) 164+84.12 on the west line of a remainder of a called 0.33 acre tract, described in a deed to Jim Briggs and Wife, Janna Briggs, recorded in Document No. 2006078763, O.P.R.W.C.TX., same being the existing north right-of-way line of S.H. 29, a variable width right-of-way, described to the State of Texas in Document No. 2006006974, O.P.R.W.C.TX., and depicted in TXDOT R.O.W. Strip Map CSJ No. 0337-01-023, for the southeast corner of Lot 2, CR 265 Subdivision, Final Plat, as recorded in Cabinet EE, Slides 237-238, Plat Records of Williamson County, Texas (P.R.W.C.TX.), described in a deed to Georgetown ER, LLC, recorded in Document No. 2018086351, O.P.R.W.C.TX.;

THENCE, South 20°10'02" East, with the west line of said remainder of a called 0.33 acre tract and the existing north right-of-way line of said S.H. 29, a distance of **10.50 feet** to a TXDOT Type II bronze disk set in concrete 66.00 feet left of S.H. 29 E.C.S. 164+87.33 on the proposed north right-of-way line of S.H. 29;

THENCE, **North 87°39'07" East**, departing the west line of said remainder of a called 0.33 acre tract and the existing north right-of-way line of said S.H. 29, with the proposed north right-of-way line of said S.H. 29, over and across said remainder of a called 0.33 acre tract, a distance of **123.34 feet** to a 5/8-inch iron rod with a 2-inch aluminum cap stamped " TXDOT" set (Surface Coordinates: N=10,204,945.99, E=3,125,531.98) 66.00 feet left of S.H. 29 E.C.S. 166+10.67 on the east line of said remainder of a called 0.33 acre tract and the west line of said Lot 1, for the northwest corner and **POINT OF BEGINNING** of the parcel described herein;

1) **THENCE**, **North 87°39'07" East**, departing the common line of said remainder of a called 0.33 acre tract and said Lot 1, continuing along the proposed north right-of-way line of said S.H. 29, over and across said Lot 1, a distance of **267.96 feet** to a 5/8-inch iron rod with a 2-inch aluminum cap stamped "TXDOT" set 66.00 feet left of S.H. 29 E.C.S. 168+78.64 on the east line of said Lot 1 and the west line of Lot 2A, Amended Final Plat of Lots 2 and 3, Wolf Ranch North, as recorded in Document No. 2014074726, O.P.R.W.C.TX., described in a deed to Batey Charolais, Inc., recorded in Document No. 2022116358, O.P.R.W.C.TX., for the northeast corner of the parcel described herein;

2) **THENCE**, **South 02°20'53" East**, departing the proposed north right-of-way line of said S.H. 29, with the common line of said Lot 1 and said Lot 2A, a distance of **5.00 feet** to a cotton spindle with a shiner stamped "Chaparral Boundary" found on the existing north right-of-way line of said S.H. 29, for the southwest corner of said Lot 2A, same being the southeast corner of said Lot 1 and of the parcel described herein;

3) **THENCE**, **South 87°39'07" West**, departing the common line of said Lot 1 and said Lot 2A, with the existing north right-of-way line of said S.H. 29, a distance of **268.10 feet** to a 5/8-inch iron rod found, for the southeast corner of said remainder of a called 0.33 acre tract, same being the southwest corner of said Lot 1 and of the parcel described herein;

THIS SPACE INTENTIONALLY LEFT BLANK

EXHIBIT "A"

County: Williamson
Highway: S.H. 29
Limits: From 0.161 Miles West of Wolf Ranch Parkway To I.H. 35
CCSJ: 0337-01-053
Parcel No.: 15

4) **THENCE**, **North 00°47'15" West**, departing the existing north right-of-way line of said S.H. 29, with the east line of said remainder of a 0.33 acre tract and the west line of said Lot 1, a distance of **5.00 feet** to the **POINT OF BEGINNING**, and containing 0.0308 acres (1,340 sq. ft.) of land.

Bearing Basis:
All bearings shown are based on NAD83/2011 Texas Coordinate System, Central Zone (4203). All distances shown are surface and may be converted to grid by dividing by a Surface Adjustment Factor of 1.00011. All coordinates shown are in surface and may be converted by dividing by the same factor. Project units are in U.S. Survey Feet.

THE STATE OF TEXAS §
§ KNOW ALL MEN BY THESE PRESENTS:
COUNTY OF TRAVIS §

That I, Scott C. Brashear, a Registered Professional Land Surveyor, do hereby certify that the above description is true and correct to the best of my knowledge and belief and that the property described herein was determined by a survey made on the ground under my direction and supervision.

WITNESS MY HAND AND SEAL at Austin, Travis County, Texas, on the date shown below.

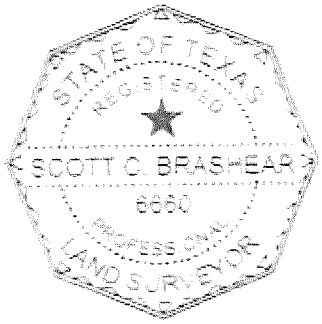

SURVEYING AND MAPPING, LLC
4801 Southwest Pkwy
Building Two, Suite 100
Austin, Texas 78735
TX. Firm No. 10064300

Scott C. Brashear 4/5/2024
Scott C. Brashear Date
Registered Professional Land Surveyor
No. 6660 – State of Texas

EXHIBIT "B"

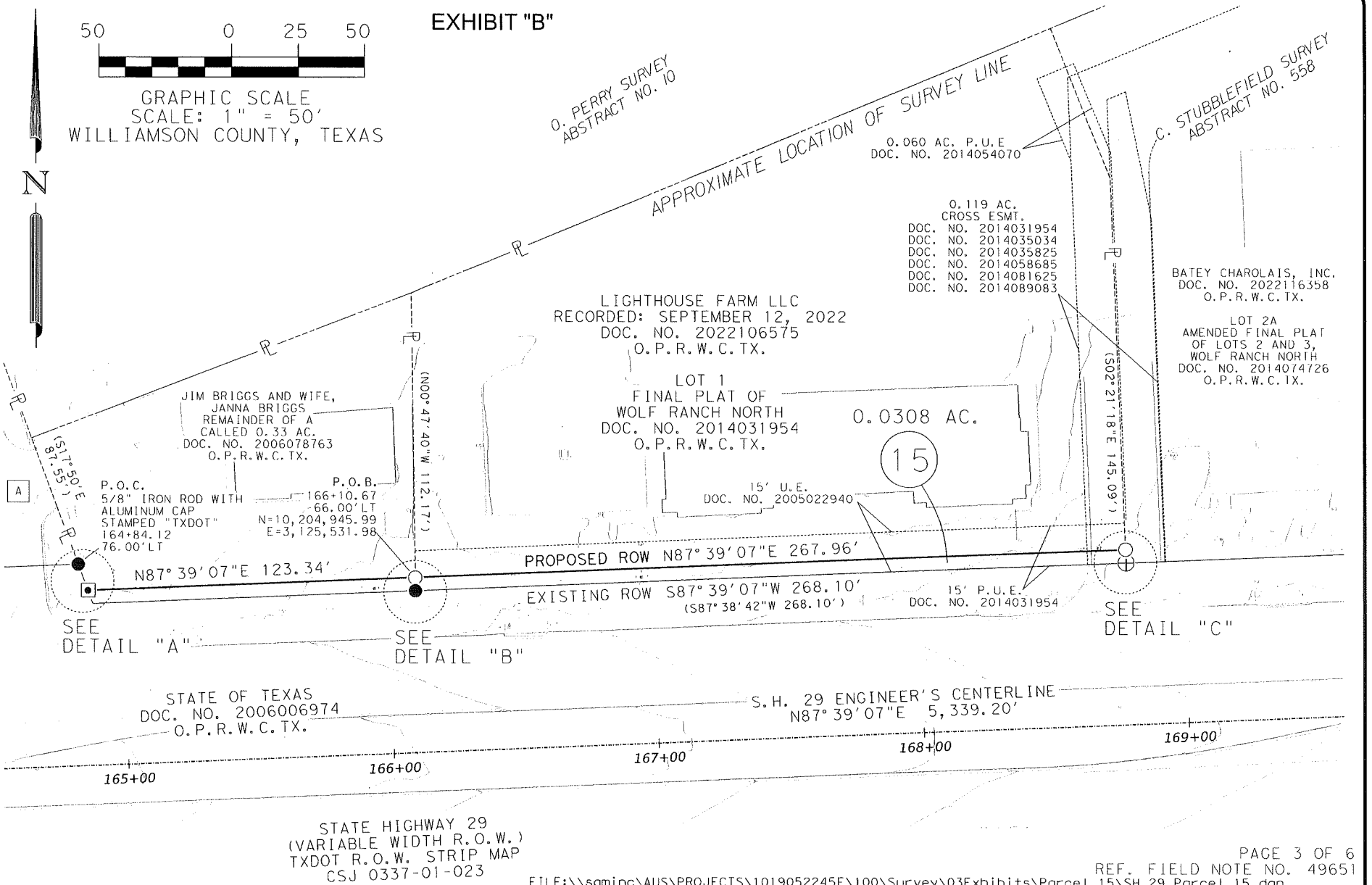

REF. FIELD NOTE NO. 49651

FILE:\\saminc\AUS\PROJECTS\1019052245F\100\Survey\03Exhibits\Parcel 15\SH 29_Parcel 15.dgn

EXISTING	*0.9669 AC.	ACQUIRE	0.0308 AC.	REMAINING	0.9361 AC. LEFT

© 2024

Texas Department of Transportation

SAM™
4801 Southwest Parkway
Building Two, Suite 100
Austin, Texas 78735
(512) 447-0575
Fax: (512) 326-3029
Texas Firm Registration No. 10064300

RIGHT-OF-WAY SKETCH
SHOWING PROPERTY OF
LIGHTHOUSE FARMS LLC
PARCEL 15
0.0308 AC. (1,340 SQ. FT.)
CSJ NO. 0337-01-053

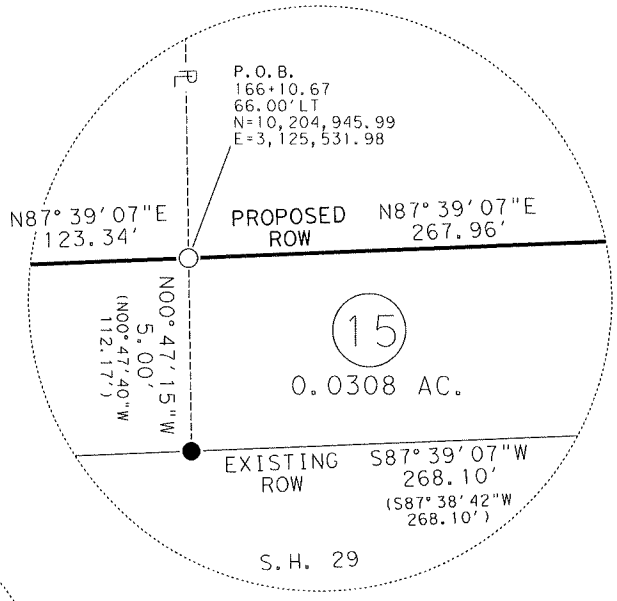

DETAIL "B"
NOT TO SCALE

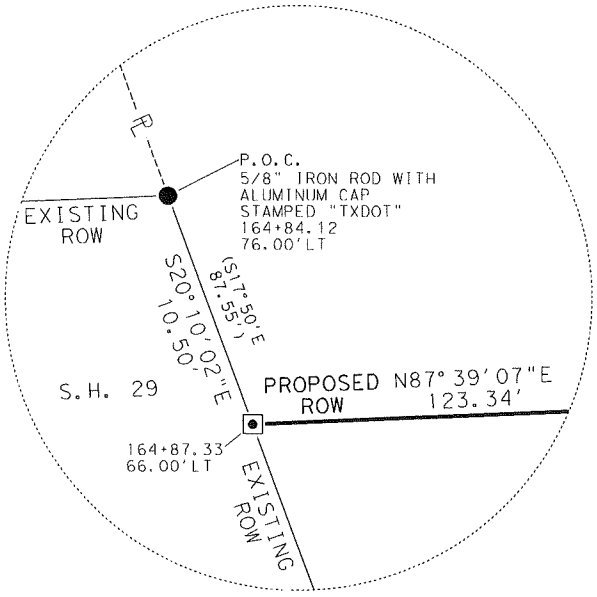

DETAIL "A"
NOT TO SCALE

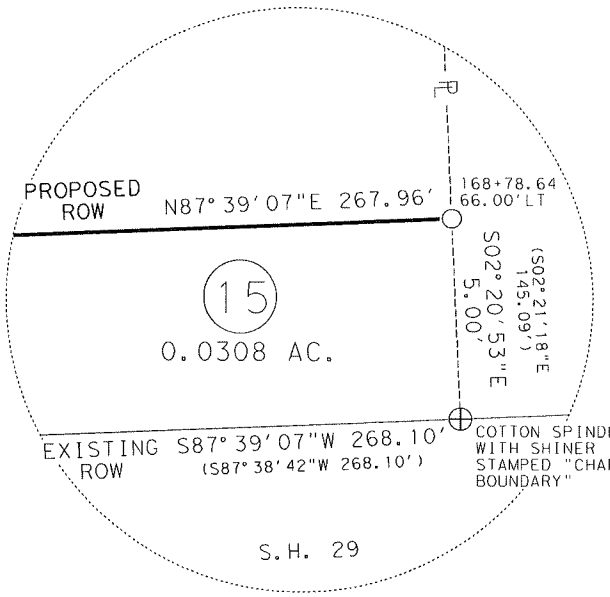

DETAIL "C"
NOT TO SCALE

REF. FIELD NOTE NO. 49651
FILE:\\saminc\AUS\PROJECTS\1019052245F\100\Survey\03Exhibits\Parcel 15\SH 29_Parcel 15.dgn

EXISTING	*0.9669 AC.	ACQUIRE	0.0308 AC.	REMAINING	0.9361 AC. LEFT

© 2024

Texas Department of Transportation

SAM™
4801 Southwest Parkway
Building Two, Suite 100
Austin, Texas 78735
(512) 447-0575
Fax: (512) 326-3029
Texas Firm Registration No. 10064300

RIGHT-OF-WAY SKETCH
SHOWING PROPERTY OF
LIGHTHOUSE FARMS LLC
PARCEL 15
0.0308 AC. (1,340 SQ. FT.)
CSJ NO. 0337-01-053

SCHEDULE B:

THIS SURVEY HEREON WAS PREPARED IN CONJUCTION WITH THAT COMMITMENT FOR TITLE INSURANCE GF NO. 24-779646-GT, ISSUED BY FIRST NATIONAL TITLE INSURANCE COMPANY, EFFECTIVE DATE JANUARY 25, 2024, AND ISSUED DATE FEBRUARY 5, 2024.

10. THE FOLLOWING MATTERS AND ALL TERMS OF THE DOCUMENTS CREATING OR OFFERING EVIDENCE OF THE MATTERS (WE MUST INSERT MATTERS OR DELETE THIS EXCEPTION.):

A. ALL LEASES, GRANTS, EXCEPTIONS OR RESERVATIONS OF COAL, LIGNITE, OIL, GAS AND OTHER MINERALS, TOGETHER WITH ALL RIGHTS, PRIVILEGES AND IMMUNITIES RELATING THERETO, APPEARING IN THE PUBLIC RECORDS WHETHER LISTED IN SCHEDULE B OR NOT. THERE MAY BE LEASES, GRANTS, EXCEPTIONS OR RESERVATIONS OF MINERAL INTEREST THAT ARE NOT LISTED.

B. ALL LEASES, GRANTS, EXCEPTIONS OR RESERVATIONS OF THE GEOTHERMAL ENERGY AND ASSOCIATED RESOURCES BELOW THE SURFACE OF THE LAND, TOGETHER WITH ALL RIGHTS, PRIVILEGES, AND IMMUNITIES RELATING THERETO, APPEARING IN THE PUBLIC RECORDS WHETHER LISTED IN SCHEDULE B OR NOT. THERE MAY BE LEASES, GRANTS, EXCEPTIONS OR RESERVATIONS OF THE GEOTHERMAL ENERGY AND ASSOCIATED RESOURCES BELOW THE SURFACE OF THE LAND THAT ARE NOT LISTED.

C. ALL VISIBLE AND APPARENT EASEMENTS OR USES AND ALL UNDERGROUND EASEMENTS OR USES, THE EXISTENCE OF WHICH MAY ARISE BY UNRECORDED GRANT OR BY USE.

D. RIGHTS OF PARTIES IN POSSESSION.

E. RIGHTS OF TENANTS, AS TENANTS ONLY, UNDER UNRECORDED LEASES OR RENTAL AGREEMENTS.

F. THOSE EASEMENT(S) AND/OR BUILDING LINE(S) AFFECTING THE SUBJECT PROPERTY AS SHOWN ON MAP OR PLAT RECORDED IN DOCUMENT NO. 2014031954, MAP OR PLAT RECORDS, WILLIAMSON COUNTY, TEXAS. (AFFECTS PARCEL AS SHOWN)

G. EASEMENT DATED MAY 28, 1936, GRANTED BY W. W. DUNAGAN AND WIFE, RUTH DUNAGAN TO TEXAS POWER & LIGHT COMPANY, RECORDED IN VOLUME 280, PAGE 541, DEED RECORDS, WILLIAMSON COUNTY, TEXAS. (MAY AFFECT)

H. RESERVATION OF AN EASEMENT OVER THE SUBJECT PROPERTY AS SET OUT IN THE INSTRUMENT RECORDED IN VOLUME 285, PAGE 561, DEED RECORDS, WILLIAMSON COUNTY, TEXAS. (MAY AFFECT)

I. EASEMENT DATED JUNE 12, 1946, GRANTED BY J. D. SHIRES AND WIFE, BEULAH SHIRES TO TEXAS POWER & LIGHT COMPANY, RECORDED IN VOLUME 337, PAGE 255, DEED RECORDS, WILLIAMSON COUNTY, TEXAS. (MAY AFFECT)

J. EASEMENT GRANTED TO TEXAS POWER AND LIGHT COMPANY RECRODED IN VOLUME 876, PAGE 358, REAL PROPERTY RECORDS, WILLIAMSON COUNTY, TEXAS. (DOES NOT AFFECT)

K. TERMS AND CONDITIONS CONTAINED IN THAT AFFIDAVIT REGARDING POLLUTION ABATEMENT PLAN RECORDED IN DOCUMENT NO. 9612319, OFFICIAL RECORDS, WILLIAMSON COUNTY, TEXAS. (MAY AFFECT)

L. UTILITY EASEMENT GRANTED TO THE CITY OF GEORGETOWN IN DOCUMENT NO. 2004085506, REAL PROPERTY RECORDS, WILLIAMSON COUNTY, TEXAS. (DOES NOT AFFECT)

M. WATER LINE EASEMENT RESERVED IN DEED RECORDED IN VOLUME 624, PAGE 775, DEED RECORDS, WILLIAMSON COUNTY, TEXAS. AS AFFECTED BY INSTRUMENT RECORDED IN DOCUMENT NO. 2005095826, REAL PROPERTY RECORDS, WILLIAMSON COUNTY, TEXAS. (DOES NOT AFFECT)

N. TERMS, CONDITIONS AND PROVISIONS OF THAT CERTAIN CROSS EASEMENT AND NON-BARRIER AGREEMENTF DATED OCTOBER 19, 2011, BY AND BETWEEN SIMON RIVERHILLS, L.P. AND IVA WOLF MCLACHLAN, RECORDED UNDER DOCUMENT NO. 2011070961, OFFICIAL PUBLIC RECORDS, WILLIAMSON COUNTY, TEXAS. (DOES NOT AFFECT)

O. UTILITY EASEMENTS AS DESCRIBED IN EXHIBITS "C" AND "D" IN JUDGMENT IN ABSENCE OF OBJECTION UNDER SUIT STYLED THE STATE OF TEXAS AND THE CITY OF GEORGETOWN VERSUS SAN GABRIEL STORAGE SYSTEMS, ET AL UNDER CAUSE NO. 04-0998-CC3, COUNTY COURT AT LAW NO. 3, WILLIAMSON COUNTY, TEXAS AND RECORDED UNDER DOCUMENT NO. 2005022940, OFFICIAL PUBLIC RECORDS, WILLIAMSON COUNTY, TEXAS. (AFFECTS PARCEL AS SHOWN)

P. EDWARDS AQUIFER PROTECTION PLAN RECORDED UNDER DOCUMENT NO. 2013092211, AND 2013092213, OFFICIAL PUBLIC RECORDS, WILLIAMSON COUNTY, TEXAS. (MAY AFFECT)

Q. PERMANENT NON-EXCLUSIVE CROSS ACCESS EASEMENT AS SET OUT IN RESTRICTIONS RECORDED UNDER DOCUMENT NO. 2014035034, OFFICIAL PUBLIC RECORDS, WILLIAMSON COUNTY, TEXAS. (DOES NOT AFFECT)

R. MATTERS CONTAINED IN THAT CERTAIN BOUNDARY LINE AGREEMENT AND SPECIAL WARRANTY DEED, FILED MAY 8, 2014, RECORDED IN DOCUMENT NO. 2014033678, AND 2014033679, OFFICIAL PUBLIC RECORDS OF WILLIAMSON COUNTY, TEXAS. (DOES NOT AFFECT)

S. A PERMANENT NON-EXCLUSIVE UTILITY EASEMENT UNDER AND ACROSS THAT PORTION OF THEIR RESPECTIVE LOTS AS SET OUT IN RESTRICTIONS RECORDED UNDER DOCUMENT NO. 2014035034, OFFICIAL PUBLIC RECORDS, WILLIAMSON COUNTY, TEXAS. (AFFECTS PARCEL AS SHOWN)

T. EASEMENT AND RIGHT OF WAY DATED APRIL 4, 2014, GRANTED BY SIMON RIVERHILLS, L.P. TO ATMOS ENERGY CORPORATION, RECORDED UNDER DOCUMENT NO. 2014033726, OFFICIAL PUBLIC RECORDS, WILLIAMSON COUNTY, TEXAS. (DOES NOT AFFECT)

U. UTILITY EASEMENT DATED JUNE 4, 2014, GRANTED BY SIMON RIVERHILLS, L.P. TO CITY OF GEORGETOWN, RECORDED UNDER DOCUMENT NO. 2014054069, OFFICIAL PUBLIC RECORDS, WILLIAMSON COUNTY, TEXAS. (DOES NOT AFFECT)

V. UTILITY EASEMENT DATED JUNE 4, 2014, GRANTED BY SIMON RIVERHILLS, L.P. TO CITY OF GEORGETOWN, RECORDED UNDER DOCUMENT NO. 2014054070, OFFICIAL PUBLIC RECORDS, WILLIAMSON COUNTY, TEXAS. (AFFECTS PARCEL AS SHOWN)

W. A PERMANENT, NON-EXCLUSIVE EASEMENT IN COMMON WITH OTHERS, TO TIE INTO, DISCHARGE SURFACE AND/OR STORM WATER INTO AND OTHERWISE MAKE USE OF FOR ITS INTENDED PURPOSES, THE STORM WATER DETENTION SYSTEM AS SET OUT IN RESTRICTIONS RECORDED UNDER DOCUMENT NO. 2014035825, DOCUMENT NO. 2014058685, AND THAT CERTAIN COVENANTS CONDITIONS AND RESTRICTIONS AGREEMENT BY AND BETWEEN SIMON RIVERHILLS, L.P., A TEXAS LIMITED PARTNERSHIP AND NET3 (GEORGETOWN), LLC RECORDED IN THE OFFICIAL PUBLIC RECORDS, WILLIAMSON COUNTY, TEXAS IN CONJUNCTION WITH THE CLOSING BETWEEN SUCH PARTIES (THE "COVENANT AGREEMENT"). (AFFECTS PARCEL AS SHOWN)

X. CURB CUTS SERVING THE PARCEL WILL NOT BE ALTERED OR CHANGED WITHOUT PRIOR WRITTEN APPROVAL OF THE DEVELOPER AND THE OWNER AS SET OUT IN RESTRICTIONS RECORDED UNDER DOCUMENT NO. 2014035825 AND DOCUMENT NO. 2014058685, OFFICIAL PUBLIC RECORDS, WILLIAMSON COUNTY, TEXAS. (MAY AFFECT)

Y. RESERVED UTILITY EASEMENT SET OUT IN DOCUMENT RECRODED IN DOCUMENT NO. 2014035826, REAL PROPERTY RECORDS, WILLIAMSON COUNTY, TEXAS. (MAY AFFECT)

Z. EASEMENTS, FEES, AND MATTERS CONTAINED IN THAT CERTAIN MASTER DECLARATION OF COVENANTS CROSS EASEMENTS, AS SET OUT IN THE INSTRUMENT RECORDED IN DOCUMENT NOS. 2014035034, 2014035825, 2014058685, 2014081625, AND 2014089083, OFFICIAL PUBLIC RECORDS OF WILLIAMSON COUNTY, TEXAS. (AFFECTS PARCEL AS SHOWN)

AA. THE TERMS, PROVISIONS, EASEMENTS, COVENANTS, RESTRICTIONS AND LIEN FOR ASSESSMENTS AS SHOWN IN RESTRICTIONS RECORDED IN DOCUMENT NO. 2014081625, REAL PROPERTY RECORDS, WILLIAMSON COUNTY, TEXAS; WHEN TAKEN WITH ALL AMENDMENTS AND/OR SUPPLEMENTS THERETO. (MAY AFFECT)

BB. INTEREST IN AND TO OIL, GAS AND OTHER MINERALS AND/OR ROYALTIES, BONUSES, RENTALS AND ALL OTHER RIGHTS RELATING THERETO AS SET FORTH IN THE DOCUMENT RECORDED IN DOCUMENT NO. 2014081621, CORRECTED IN DOCUMENT NO. 2015061539, OFFICIAL PUBLIC RECORDS OF WILLIAMSON COUNTY, TEXAS. THE COMPANY MAKES NO REPRESENTATION AS TO THE PRESENT OWNERSHIP OF THIS INTEREST. (MAY AFFECT)

CC. THE LAND HAS FRONTAGE OR ABUTS STATE HIGHWAY 29, WHICH IS A CONTROLLED ACCESS HIGHWAY. THIS POLICY DOES NOT INSURE AGAINST THE EXERCISE OF POWER BY COMPETENT GOVERNMENTAL AUTHORITY TO LIMIT, CONTROL OR DENY ACCESS, INGRESS OR EGRESS TO THE LAND FROM SAID HIGHWAY OR SERVICE ROAD WHICH THE LAND ABUTS, NOR DOES IT INSURE THAT THE INSURED HAS OR SHALL CONTINUE TO HAVE ACCESS, INGRESS OR EGRESS FROM SUCH PROPERTY TO AND FROM SAID HIGHWAY AND SERVICE ROAD. (AFFECTS PARCEL)

DD. TERMS AND PROVISIONS OF LEASE AGREEMENT FROM NET3 (GEORGETOWN), LLC, LESSOR TO MATTRESS FIRM, INC., LESSEE, AS DISCLOSED BY THE SUBORDINATION, NON-DISTURBANCE AND ATTORNMENT AGREEMETN, DATED AUGUST 28, 2015, FILED AUGUST 29, 2015, RECORDED IN CLERK'S FILE NO. 2015076092, REAL PROPERTY RECORDS, WILLIAMSON COUNTY, TEXAS. (MAY AFFECT)

REF. FIELD NOTE NO. 49651

FILE:\\saminc\AUS\PROJECTS\1019052245F\100\Survey\03Exhibits\Parcel 15\SH 29_Parcel 15.dgn

EXISTING	*0.9669 AC.	ACQUIRE	0.0308 AC.	REMAINING	0.9361 AC. LEFT

© 2024

Texas Department of Transportation

SAM™
4801 Southwest Parkway
Building Two, Suite 100
Austin, Texas 78735
(512) 447-0575
Fax: (512) 326-3029
Texas Firm Registration No. 10064300

RIGHT-OF-WAY SKETCH
SHOWING PROPERTY OF
LIGHTHOUSE FARMS LLC
PARCEL 15
0.0308 AC. (1,340 SQ. FT.)
CSJ NO. 0337-01-053

LEGEND

■	TYPE I CONCRETE MONUMENT FOUND
◎	TYPE II BRONZE DISK IN CONCRETE FOUND
⊙	TYPE II BRONZE DISK IN CONCRETE SET
○	5/8" IRON ROD SET WITH TXDOT ALUMINUM CAP
●	5/8" IRON ROD FOUND (AS NOTED)
⊕	NAIL FOUND (AS NOTED)
⬡	FENCE POST (TYPE NOTED)
△	CALCULATED POINT
℄	PROPERTY LINE
( )	RECORD INFORMATION
P.O.B.	POINT OF BEGINNING
P.O.C.	POINT OF COMMENCING
P.O.R.	POINT OF REFERENCE
N.T.S.	NOT TO SCALE
P.R.W.C.TX.	PLAT RECORDS OF WILLIAMSON COUNTY, TEXAS
O.P.R.W.C.TX.	OFFICIAL PUBLIC RECORDS OF WILLIAMSON COUNTY, TEXAS
	DISTANCE NOT TO SCALE
	DEED LINE (COMMON OWNERSHIP)
	PROPERTY LINE
	EXISTING RIGHT-OF-WAY
	PARCEL LIMITS
	PROPOSED DRAINAGE EASEMENT
	EXISTING EASEMENT LINE

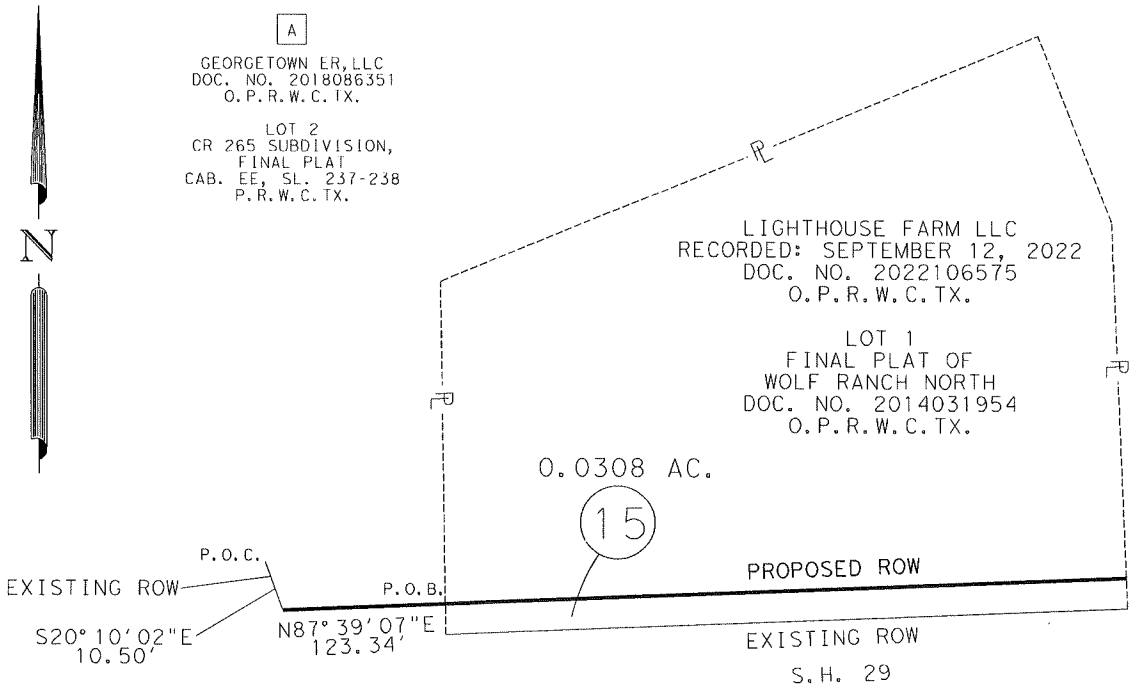

PARENT TRACT INSET
N.T.S.

NOTES:

1. ALL PROJECT COORDINATES AND BEARINGS ARE GRID NORTH BASED ON THE TEXAS COORDINATE SYSTEM, CENTRAL ZONE (4203), NAD 83 (2011), EPOCH 2010.0. ALL SURFACE COORDINATES SHOWN HEREON MAY BE CONVERTED TO GRID BY DIVIDING BY A SURFACE ADJUSTMENT FACTOR OF 1.00011. UNITS: U.S. SURVEY FEET. SURVEY DATE: AUGUST, 2023

2. THIS SURVEY WAS COMPLETED WITH THE BENEFIT OF TITLE REPORT, PROVIDED BY FIRST NATIONAL TITLE INSURANCE COMPANY, GF NO. 24-779646-GT, EFFECTIVE DATE JANUARY 25, 2024, AND ISSUED DATE FEBRUARY 5, 2024. THERE MAY BE EASEMENTS OR OTHER MATTERS, RECORDED OR UNRECORDED, THAT ARE NOT SHOWN.

3. A PROPERTY DESCRIPTION OF EVEN DATE WAS PREPARED IN CONJUNCTION WITH THIS PARCEL PLAT.

* AREA CALCULATED BY SAM, LLC.

I HEREBY CERTIFY THAT THIS SURVEY WAS MADE ON THE GROUND UNDER MY DIRECTION AND SUPERVISION AND THAT THIS PLAT IS TRUE AND CORRECT TO THE BEST OF MY KNOWLEDGE AND BELIEF.

STATE OF TEXAS
REGISTERED
SCOTT C. BRASHEAR
6660
PROFESSIONAL
LAND SURVEYOR

Scott C. Brashear

SCOTT C. BRASHEAR
REGISTERED PROFESSIONAL LAND SURVEYOR
NO. 6660, STATE OF TEXAS

4/5/2024
DATE

REF. FIELD NOTE NO. 49651
FILE:\\saminc\AUS\PROJECTS\1019052245F\100\Survey\03Exhibits\Parcel 15\SH 29_Parcel 15.dgn

EXISTING	*0.9669 AC.	ACQUIRE	0.0308 AC.	REMAINING	0.9361 AC. LEFT

© 2024
Texas Department of Transportation

SAM™
4801 Southwest Parkway
Building Two, Suite 100
Austin, Texas 78735
(512) 447-0575
Fax: (512) 326-3029
Texas Firm Registration No. 10064300

RIGHT-OF-WAY SKETCH
SHOWING PROPERTY OF
LIGHTHOUSE FARMS LLC
PARCEL 15
0.0308 AC. (1,340 SQ. FT.)
CSJ NO. 0337-01-053

ELECTRONICALLY RECORDED
OFFICIAL PUBLIC RECORDS

2025078382

Pages: 10 Fee: $57.00
10/03/2025 11:00 AM
KWEEMS



Nancy E. Rister, County Clerk
Williamson County,Texas