Modification of a Previously Approved Contributing Zone Plan Checklist

- **Edwards Aquifer Application Cover Page (TCEQ-20705)**
- **Modification of a Previously Approved Contributing Zone Plan Form (TCEQ-10259)**

  Attachment A - Original Approval Letter and Approved Modification Letters
  Attachment B - Narrative of Proposed Modification
  Attachment C - Current site plan of the approved project

- **Contributing Zone Plan Application (TCEQ-10257)**
- **Storm Water Pollution Prevention Plan (SWPPP)**

  -OR-

- **Temporary Stormwater Section (TCEQ-0602)**
- **Copy of Notice of Intent (NOI)**
- **Agent Authorization Form (TCEQ-0599), if application submitted by agent**
- **Application Fee Form (TCEQ-0574)**
- **Check Payable to the "Texas Commission on Environmental Quality"**
- **Core Data Form (TCEQ-10400)**

Texas Commission on Environmental Quality

Edwards Aquifer Application Cover Page

Our Review of Your Application

The Edwards Aquifer Program staff conducts an administrative and technical review of all applications. The turnaround time for administrative review can be up to 30 days as outlined in 30 TAC 213.4(e). Generally administrative completeness is determined during the intake meeting or within a few days of receipt. The turnaround time for technical review of an administratively complete Edwards Aquifer application is 90 days as outlined in 30 TAC 213.4(e). Please know that the review and approval time is directly impacted by the quality and completeness of the initial application that is received. In order to conduct a timely review, it is imperative that the information provided in an Edwards Aquifer application include final plans, be accurate, complete, and in compliance with 30 TAC 213.

Administrative Review

1. Edwards Aquifer applications must be deemed administratively complete before a technical review can begin. To be considered administratively complete, the application must contain completed forms and attachments, provide the requested information, and meet all the site plan requirements. The submitted application and plan sheets should be final plans. Please submit one full-size set of plan sheets with the original application, and half-size sets with the additional copies.

   To ensure that all applicable documents are included in the application, the program has developed tools to guide you and web pages to provide all forms, checklists, and guidance. Please visit the below website for assistance: http://www.tceq.texas.gov/field/eapp.

2. This Edwards Aquifer Application Cover Page form (certified by the applicant or agent) must be included in the application and brought to the administrative review meeting.

3. Administrative reviews are scheduled with program staff who will conduct the review. Applicants or their authorized agent should call the appropriate regional office, according to the county in which the project is located, to schedule a review. The average meeting time is one hour.

4. In the meeting, the application is examined for administrative completeness. Deficiencies will be noted by staff and emailed or faxed to the applicant and authorized agent at the end of the meeting, or shortly after. Administrative deficiencies will cause the application to be deemed incomplete and returned.

   An appointment should be made to resubmit the application. The application is re-examined to ensure all deficiencies are resolved. The application will only be deemed administratively complete when all administrative deficiencies are addressed.

5. If an application is received by mail, courier service, or otherwise submitted without a review meeting, the administrative review will be conducted within 30 days. The applicant and agent will be contacted with the results of the administrative review. If the application is found to be administratively incomplete, it can be retrieved from the regional office or returned by regular mail. If returned by mail, the regional office may require arrangements for return shipping.

6. If the geologic assessment was completed before October 1, 2004 and the site contains "possibly sensitive" features, the assessment must be updated in accordance with the *Instructions to Geologists* (TCEQ-0585 Instructions).

Technical Review

1. When an application is deemed administratively complete, the technical review period begins. The regional office will distribute copies of the application to the identified affected city, county, and groundwater conservation district whose jurisdiction includes the subject site. These entities and the public have 30 days to provide comments on the application to the regional office. All comments received are reviewed by TCEQ.

2. A site assessment is usually conducted as part of the technical review, to evaluate the geologic assessment and observe existing site conditions. The site must be accessible to our staff. The site boundaries should be

clearly marked, features identified in the geologic assessment should be flagged, roadways marked and the alignment of the Sewage Collection System and manholes should be staked at the time the application is submitted. If the site is not marked the application may be returned.

3. We evaluate the application for technical completeness and contact the applicant and agent via Notice of Deficiency (NOD) to request additional information and identify technical deficiencies. There are two deficiency response periods available to the applicant. There are 14 days to resolve deficiencies noted in the first NOD. If a second NOD is issued, there is an additional 14 days to resolve deficiencies. If the response to the second notice is not received, is incomplete or inadequate, or provides new information that is incomplete or inadequate, the application must be withdrawn or will be denied. Please note that because the technical review is underway, whether the application is withdrawn or denied **the application fee will be forfeited**.

4. The program has 90 calendar days to complete the technical review of the application. If the application is technically adequate, such that it complies with the Edwards Aquifer rules, and is protective of the Edwards Aquifer during and after construction, an approval letter will be issued. Construction or other regulated activity may not begin until an approval is issued.

Mid-Review Modifications

It is important to have final site plans prior to beginning the permitting process with TCEQ to avoid delays.

Occasionally, circumstances arise where you may have significant design and/or site plan changes after your Edwards Aquifer application has been deemed administratively complete by TCEQ. This is considered a "Mid-Review Modification". Mid-Review Modifications may require redistribution of an application that includes the proposed modifications for public comment.

If you are proposing a Mid-Review Modification, two options are available:

- If the technical review has begun your application can be denied/withdrawn, your fees will be forfeited, and the plan will have to be resubmitted.
- TCEQ can continue the technical review of the application as it was submitted, and a modification application can be submitted at a later time.

If the application is denied/withdrawn, the resubmitted application will be subject to the administrative and technical review processes and will be treated as a new application. The application will be redistributed to the affected jurisdictions.

Please contact the regional office if you have questions. If your project is located in Williamson, Travis, or Hays County, contact TCEQ's Austin Regional Office at 512-339-2929. If your project is in Comal, Bexar, Medina, Uvalde, or Kinney County, contact TCEQ's San Antonio Regional Office at 210-490-3096

Please fill out all required fields below and submit with your application.

1. Regulated Entity Name:Sweetwater Lot 3B						**2. Regulated Entity No.:**			
3. Customer Name: Sweetwater Dorado LLC.						**4. Customer No.:**			
5. Project Type: **(Please circle/check one)**	New		Modification			Extension		Exception	
6. Plan Type: **(Please circle/check one)**	WPAP	CZP	SCS	UST	AST	EXP	EXT	Technical Clarification	Optional Enhanced Measures
7. Land Use: **(Please circle/check one)**	Residential					**8. Site (acres):**			3.093
9. Application Fee:	**$4,000.00**		**10. Permanent BMP(s):**			Extended Detention Basin			
11. SCS (Linear Ft.):			**12. AST/UST (No. Tanks):**						
13. County:	Travis		**14. Watershed:**			Highland Lake			

Application Distribution

Instructions: Use the table below to determine the number of applications required. One original and one copy of the application, plus additional copies (as needed) for each affected incorporated city, county, and groundwater conservation district are required. Linear projects or large projects, which cross into multiple jurisdictions, can require additional copies. Refer to the "Texas Groundwater Conservation Districts within the EAPP Boundaries" map found at:

http://www.tceq.texas.gov/assets/public/compliance/field_ops/eapp/EAPP%20GWCD%20map.pdf

For more detailed boundaries, please contact the conservation district directly.

Austin Region			
County:	**Hays**	**Travis**	**Williamson**
Original (1 req.)	___	_1_	___
Region (1 req.)	___	_1_	___
County(ies)	___	_1_	___
Groundwater Conservation District(s)	___Edwards Aquifer Authority ___Barton Springs/ Edwards Aquifer ___Hays Trinity ___Plum Creek	___Barton Springs/ Edwards Aquifer	NA
City(ies) Jurisdiction	___Austin ___Buda ___Dripping Springs ___Kyle ___Mountain City ___San Marcos ___Wimberley ___Woodcreek	___Austin _x_Bee Cave ___Pflugerville ___Rollingwood ___Round Rock ___Sunset Valley ___West Lake Hills	___Austin ___Cedar Park ___Florence ___Georgetown ___Jerrell ___Leander ___Liberty Hill ___Pflugerville ___Round Rock

San Antonio Region					
County:	**Bexar**	**Comal**	**Kinney**	**Medina**	**Uvalde**
Original (1 req.)	___	___	___	___	___
Region (1 req.)	___	___	___	___	___
County(ies)	___	___	___	___	___
Groundwater Conservation District(s)	___ Edwards Aquifer Authority ___Trinity-Glen Rose	___Edwards Aquifer Authority	___Kinney	___EAA ___Medina	___EAA ___Uvalde
City(ies) Jurisdiction	___Castle Hills ___Fair Oaks Ranch ___Helotes ___Hill Country Village ___Hollywood Park ___San Antonio (SAWS) ___Shavano Park	___Bulverde ___Fair Oaks Ranch ___Garden Ridge ___New Braunfels ___Schertz	NA	___San Antonio ETJ (SAWS)	NA

I certify that to the best of my knowledge, that the application is complete and accurate. This application is hereby submitted to TCEQ for administrative review and technical review.

Ahmed El Seweify

Print Name of Customer/Authorized Agent

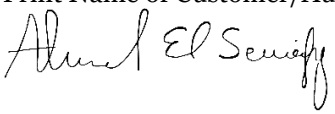

02/21/2026

Signature of Customer/Authorized Agent Date

FOR TCEQ INTERNAL USE ONLY				
Date(s)Reviewed:		Date Administratively Complete:		
Received From:		Correct Number of Copies:		
Received By:		Distribution Date:		
EAPP File Number:		Complex:		
Admin. Review(s) (No.):		No. AR Rounds:		
Delinquent Fees (Y/N):		Review Time Spent:		
Lat./Long. Verified:		SOS Customer Verification:		
Agent Authorization Complete/Notarized (Y/N):		Fee Check:	Payable to TCEQ (Y/N):	
Core Data Form Complete (Y/N):			Signed (Y/N):	
Core Data Form Incomplete Nos.:			Less than 90 days old (Y/N):	

Modification of a Previously Approved Contributing Zone Plan

Texas Commission on Environmental Quality

for Regulated Activities on the Edwards Aquifer Recharge Zone and Transition Zone and Relating to 30 TAC 213.4(j), Effective June 1, 1999

To ensure that the application is administratively complete, confirm that all fields in the form are complete, verify that all requested information is provided, consistently reference the same site and contact person in all forms in the application, and ensure forms are signed by the appropriate party.

Note: Including all the information requested in the form and attachments contributes to more streamlined technical reviews.

Signature

To the best of my knowledge, the responses to this form accurately reflect all information requested concerning the proposed regulated activities and methods to protect the Edwards Aquifer. This **Modification of a Previously Approved Contributing Zone Plan** is hereby submitted for TCEQ review and executive director approval. The request was prepared by:

Print Name of Customer/Agent: Ahmed El Seweify

Date: 02/19/2026

Signature of Customer/Agent:

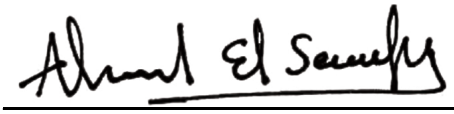

Project Information

1. Current Regulated Entity Name: Sweetwater Dorado LLC
   Original Regulated Entity Name: Sweetwater Dorado LLC
   Assigned Regulated Entity Number(s) (RN): RN111686408
   Edwards Aquifer Protection Program ID Number(s): 11003504
   ☒ The applicant has not changed and the Customer Number (CN) is: n/a
   ☐ The applicant or Regulated Entity has changed. A new Core Data Form has been provided.

2. ☒ **Attachment A: Original Approval Letter and Approved Modification Letters**. A copy of the original approval letter and copies of any modification approval letters are attached.

3. A modification of a previously approved plan is requested for (check all that apply):

☐ Any physical or operational modification of any best management practices or structure(s), including but not limited to temporary or permanent ponds, dams, berms, silt fences, and diversionary structures;
☒ Any change in the nature or character of the regulated activity from that which was originally approved;
☐ A change that would significantly impact the ability to prevent pollution of the Edwards Aquifer and hydrologically connected surface water; or
☐ Any development of land previously identified in a contributing zone plan as undeveloped.

4. ☒ Summary of Proposed Modifications (select plan type being modified). If the approved plan has been modified more than once, copy the appropriate table below, as necessary, and complete the information for each additional modification.

CZP Modification Summary	***Approved Project***	***Proposed Modification***
Acres	3.16	3.093
Type of Development	Lease Spaces	Lease Spaces
Number of Residential Lots	0	0
Impervious Cover (acres)	1.89	2.016
Impervious Cover (%)	59.81	65.16
Permanent BMPs	Extended detention & Biofiltration	Extended detention & Biofiltration
Other	_____	_____

AST Modification Summary	***Approved Project***	***Proposed Modification***
Number of ASTs	n/a	n/a
Other	n/a	n/a

UST Modification Summary	***Approved Project***	***Proposed Modification***
Number of USTs	n/a	n/a
Other	n/a	n/a

5. ☒ **Attachment B: Narrative of Proposed Modification**. A detailed narrative description of the nature of the proposed modification is attached. It discusses what was approved,

including previous modifications, and how this proposed modification will change the approved plan.

6. ☒ **Attachment C: Current Site Plan of the Approved Projec**t. A current site plan showing the existing site development (i.e., current site layout) at the time this application for modification is attached. A site plan detailing the changes proposed in the submitted modification is required elsewhere.
   - ☒ The approved construction has not commenced. The original approval letter and any subsequent modification approval letters are included as Attachment A to document that the approval has not expired.
   - ☐ The approved construction has commenced and has been completed. Attachment C illustrates that the site was constructed as approved.
   - ☐ The approved construction has commenced and has been completed. Attachment C illustrates that the site was **not** constructed as approved.
   - ☐ The approved construction has commenced and has **not** been completed. Attachment C illustrates that, thus far, the site was constructed as approved.
   - ☐ The approved construction has commenced and has **not** been completed. Attachment C illustrates that, thus far, the site was **not** constructed as approved.

7. ☒ Acreage has not been added to or removed from the approved plan.
   ☐ Acreage has been added to or removed from the approved plan and is discussed in *Attachment B: Narrative of Proposed Modification*.

8. ☒ Submit one (1) original and one (1) copy of the application, plus additional copies as needed for each affected incorporated city, groundwater conservation district, and county in which the project will be located. The TCEQ will distribute the additional copies to these jurisdictions. The copies must be submitted to the appropriate regional office.

Jon Niermann, *Chairman*
Emily Lindley, *Commissioner*
Bobby Janecka, *Commissioner*
Erin E. Chancellor, *Interim Executive Director*

TEXAS COMMISSION ON ENVIRONMENTAL QUALITY

Protecting Texas by Reducing and Preventing Pollution

May 19, 2023

Mr. Venkat R. Dubhakula
GoAustin Investment, LLC
15304 Cipriano Dr.
Austin, Texas 78257

Re: Approval of a Contributing Zone Plan (CZP)
Sweetwater Lot 3B; Located at 16620 Sweetwater Village Dr.; ETJ of Bee Cave, Travis County, Texas
Edwards Aquifer Protection Program ID: 11003504, Regulated Entity No. RN111686408

Dear Mr. Dubhakula:

The Texas Commission on Environmental Quality (TCEQ) has completed its review on the application for the above-referenced project submitted to the Edwards Aquifer Protection Program (EAPP) by Hollingsworth Pack on behalf of the applicant, GoAustin Investment, LLC on February 24, 2023. Final review of the application was completed after additional material was received on May 12, 2023, May 16, 2023, and May 17, 2023.

As presented to the TCEQ, the application was prepared in general compliance with the requirements of 30 Texas Administrative Codes (TAC) Chapter §213. The permanent best management practices (BMPs) and measures represented in the application were prepared by a Texas licensed professional engineer (PE). All construction plans and design information were sealed, signed, and dated by a Texas licensed PE. Therefore, the application for the construction of the proposed project and methods to protect the Edwards Aquifer are **approved,** subject to applicable state rules and the conditions in this letter.

This approval expires two years from the date of this letter, unless, prior to the expiration date, more than 10 percent of the construction has commenced on the project or an extension of time has been officially requested. This approval or extension will expire, and no extension will be granted if more than 50 percent of the project has not been completed within ten years from the date of this letter.

The applicant or a person affected may file with the chief clerk a motion for reconsideration of the executive director's final action on this Edwards Aquifer protection plan. A motion for reconsideration must be filed in accordance with 30 TAC §50.139.

BACKGROUND

The Sweetwater Crossing Phase 1 CZP (EAPP ID No. 11000319), approved by letter dated November 2, 2016, included the construction of an extended detention basin and bioretention basin in series.

PROJECT DESCRIPTION

The proposed commercial project will have an area of approximately 3.16 acres. The project will include a 2-story building that includes office space, a medical office, restaurant, and retail space. The impervious cover will be 1.89 acres (59.81 percent). Project wastewater will be disposed of by conveyance to the existing Lazy Nine MUD 1A Wastewater Treatment Plant.

PERMANENT POLLUTION ABATEMENT MEASURES

To prevent the pollution of stormwater runoff originating on-site or upgradient of the site and potentially flowing across and off the site after construction, an extended detention basin and bioretention basin in series (EAPP ID No. 11000319), designed using the TCEQ technical guidance, *RG-348, Complying with the Edwards Aquifer Rules: Technical Guidance on Best Management Practices,* will be used to treat stormwater runoff. The required total suspended solids (TSS) treatment for this project is 1,641 pounds of TSS generated from the 1.89 acres of impervious cover. The approved permanent BMPs and measures meet the required 80 percent removal of the increased load in TSS caused by the project.

The permanent BMPS shall be operational prior to occupancy or use of the proposed project. Inspection, maintenance, repair, and retrofit of the permanent BMPs shall be in accordance with the approved application.

STANDARD CONDITIONS

1. The plan holder (applicant) must comply with all provisions of 30 TAC Chapter §213 and all technical specifications in the approved plan. The plan holder should also acquire and comply with additional and separate approvals, permits, registrations or authorizations from other TCEQ Programs (i.e., Stormwater, Water Rights, Dam Safety, Underground Injection Control) as required based on the specifics of the plan.

2. In addition to the rules of the Commission, the plan holder must also comply with state and local ordinances and regulations providing for the protection of water quality as applicable.

Prior to Commencement of Construction:

3. The plan holder of any approved Edwards Aquifer protection plan must notify the EAPP and obtain approval from the executive director prior to initiating any modification to the activities described in the referenced application following the date of the approval.

4. The plan holder must provide written notification of intent to commence construction, replacement, or rehabilitation of the referenced project. Notification must be submitted to the EAPP no later than 48 hours prior to commencement of the regulated activity. Notification must include the date on which the regulated activity will commence, the name of the approved plan and program ID number for the regulated activity, and the name of the prime contractor with the name and telephone number of the contact person.

5. Temporary erosion and sedimentation (E&S) controls as described in the referenced application, must be installed prior to construction, and maintained during construction. Temporary E&S controls may be removed when vegetation is established, and the construction area is stabilized. The TCEQ may monitor stormwater discharges from the site to evaluate the adequacy of temporary E&S control measures. Additional controls may be necessary if excessive solids are being discharged from the site.

During Construction:

6. The application must indicate the placement of permanent aboveground storage tanks facilities for static hydrocarbons and hazardous substances with cumulative storage capacity of 500 gallons or more. Subsequent permanent storage tanks on this project site require a modification to be submitted and approved prior to installation.

7. If sediment escapes the construction site, the sediment must be removed at a frequency sufficient to minimize offsite impacts to water quality (e.g., fugitive sediment in street being washed into surface streams or sensitive features by the next rain). Sediment must be removed from sediment traps or sedimentation ponds not later than when design capacity has been reduced by 50 percent. Litter, construction debris, and construction chemicals shall be prevented from becoming stormwater discharge pollutants.

8. Intentional discharges of sediment laden water are not allowed. If dewatering becomes necessary, the discharge must be filtered through appropriately selected BMPs.

9. The following records shall be maintained and made available to the executive director upon request: the dates when major grading activities occur, the dates when construction activities temporarily or permanently cease on a portion of the site, and the dates when stabilization measures are initiated.

10. Stabilization measures shall be initiated as soon as practicable in portions of the site where construction activities have temporarily or permanently ceased, and construction activities will not resume within 21 days. When the initiation of stabilization measures by the 14th day is precluded by weather conditions, stabilization measures shall be initiated as soon as practicable.

After Completion of Construction:

11. Owners of permanent BMPs and temporary measures must ensure that the BMPs and measures are constructed and function as designed. A Texas licensed PE **must certify** in writing that the permanent BMPs or measures were constructed as designed. The certification letter must be submitted to the EAPP within 30 days of site completion.

12. The applicant shall be responsible for maintaining the permanent BMPs after construction until such time as the maintenance obligation is either assumed in writing by another entity having ownership or control of the property or the ownership of the property is transferred to the entity. A copy of the transfer of responsibility must be filed with the executive director through the EAPP within 30 days of the transfer. TCEQ form, Change in Responsibility for Maintenance on Permanent BMPs and Measures (TCEQ-10263), may be used.

The holder of the approved Edwards Aquifer protection plan is responsible for compliance with Chapter §213 and any condition of the approved plan through all phases of plan implementation. Failure to comply with any condition within this approval letter is a violation of Chapter §213 and is subject to administrative rule or orders and penalties as provided under §213.10 of this title (relating to Enforcement). Such violations may also be subject to civil penalties and injunction. Upon legal transfer of this property, the new owner is required to comply with all terms of the approved Edwards Aquifer protection plan.

This action is taken as delegated by the executive director of the Texas Commission on Environmental Quality. If you have any questions or require additional information, please contact Mr. Colin Gearing of the Edwards Aquifer Protection Program at 512-239-7015 or the regional office at 512-339-2929.

Sincerely,

Lillian Butler

Lillian Butler, Section Manager
Edwards Aquifer Protection Program
Texas Commission on Environmental Quality

Lib/cmg

cc: Mr. Ahmed El Seweify, P.E., Hollingsworth Pack

Jon Niermann, *Chairman*
Bobby Janecka, *Commissioner*
Catarina R. Gonzales, *Commissioner*
Kelly Keel, *Executive Director*

TEXAS COMMISSION ON ENVIRONMENTAL QUALITY

Protecting Texas by Reducing and Preventing Pollution

April 25, 2025

Mr. Venkat R. Dubhakula
GoAustin Investment, LLC
15304 Cipriano Dr.
Austin, Texas 78257

Re: Approval for Extension of Time to Commence Regulated Activities Authorized by a Contributing Zone Plan (CZP)
Sweetwater Lot 3B; Located 16620 Sweetwater Village Dr.; ETJ of Bee Cave, Travis County, Texas
Edwards Aquifer Protection Program ID: 11003504, Regulated Entity No. RN111686408

Dear Mr. Dubhakula:

The Texas Commission on Environmental Quality (TCEQ) has completed its review on the request for an extension of time for the above-referenced project submitted to the Edwards Aquifer Protection Program (EAPP) by Hollingsworth Pack on behalf of the applicant, GoAustin Investment, LLC on April 1, 2025.

As presented to the TCEQ, the extension request was prepared in general compliance with the requirements of 30 Texas Administrative Code (TAC) Chapter §213 and there have been no modifications to the previously approved plan. The extension request is hereby **approved** subject to applicable state rules and the conditions of the approval letter dated May 19, 2025.

This extension expires on **November 19, 2025**.

If construction has not commenced by this date, another request for an extension must be received before the extension expires. The extension will expire and no extension will be granted if more than 50 percent of the project has not been completed within ten years from the date of the original approval letter.

This action is taken as delegated by the executive director of the Texas Commission on Environmental Quality. If you have any questions or require additional information, please contact Emily Kerschner of the Edwards Aquifer Protection Program at 512-239-1929 or the regional office at 512-339-2929.

Sincerely,

Monica Reyes

Monica Reyes, Section Manager
Edwards Aquifer Protection Program
Texas Commission on Environmental Quality

MR/efk

cc: Mr. Ahmed El Seweify, P.E., Hollingsworth Pack

Brooke T. Paup, *Chairwoman*
Catarina R. Gonzales, *Commissioner*
Tonya R. Miller, *Commissioner*
Kelly Keel, *Executive Director*

TEXAS COMMISSION ON ENVIRONMENTAL QUALITY

Protecting Texas by Reducing and Preventing Pollution

November 25, 2025

Mr. David M. Cummings
Sweetwater Dorado LLC
19787 W. IH-10, Suite 201
San Antonio, Texas 78257

Re: Approval for Extension of Time to Commence Regulated Activities Authorized by a Contributing Zone Plan (CZP)
Sweetwater Lot 3B; Located at 16620 Sweetwater Village Dr.; Bee Cave ETJ, Travis County, Texas
Edwards Aquifer Protection Program ID: 11003504, Regulated Entity No. RN111686408

Dear Mr. Cummings:

The Texas Commission on Environmental Quality (TCEQ) has completed its review on the request for an extension of time for the above-referenced project submitted to the Edwards Aquifer Protection Program (EAPP) by AES Professional Services LLC on behalf of the applicant, Sweetwater Dorado LLC on October 30, 2025. Final review of the request was completed after additional material was received on November 25, 2025.

As presented to the TCEQ, the extension request was prepared in general compliance with the requirements of 30 Texas Administrative Code (TAC) Chapter §213 and there have been no modifications to the previously approved plan. The extension request is hereby **approved** subject to applicable state rules and the conditions of the approval letter dated May 19, 2023.

This extension expires on May 19, 2026.

If construction has not commenced by this date, another request for an extension must be received before the extension expires. The extension will expire and no extension will be granted if more than 50 percent of the project has not been completed within ten years from the date of the original approval letter.

This action is taken as delegated by the executive director of the Texas Commission on Environmental Quality. If you have any questions or require additional information, please contact Ms. Jasmine Brown of the Edwards Aquifer Protection Program at 512-239-7006 or the regional office at 512-339-2929.

Sincerely,

Monica Reyes

Monica Reyes, Section Manager
Edwards Aquifer Protection Program
Texas Commission on Environmental Quality

MR/job

cc: Mr. Ahmed El Seweify, P.E., AES Professional Services LLC

AES Engineering Consultant
civil engineering
construction management

Summary of Design Revisions

Sweetwater Lot 3B
16620 Sweetwater Village Drive,
Bee Cave, TX 78669

This letter is to summarize the recent updates made to the development plans for the Sweetwater project located at **16620 Sweetwater Village Drive, Bee Cave, TX**. These revisions were made to improve the design while remaining consistent with the overall goals of the project and maintaining compliance with the Sweetwater Development Agreement.

The following changes have been made:

1. **Building Height:** The structure has been revised from a 2-story to a 1-story building.
2. **Square Footage:** The total building area has increased slightly from 26,810 square feet to 28,050 square feet.
3. **Impervious Cover:** The impervious cover has increased by 3%. However, the project remains well within the capacity of the existing detention pond, which was designed for 70% impervious cover. The current design provides only 65.16%. This change has been reviewed and approved by the Sweetwater development team.
4. **Use & Access:** There are no changes to the building use or to the driveway layout.
5. **Fire Department Approval:** We have received approval from the Fire Department for the revised plans.
6. **Parking:** Only one additional parking space has been added beyond what was previously approved.
7. **Tree Protection:** All existing trees are being preserved and protected in accordance with county and development guidelines.
8. **Drainage:** The site will continue using an underground drainage system. We are simply relocating a few inlets and removing one manhole and one outlet to the pond.

In summary, the revised design reduces the building to a single story while maintaining the same rentable space. There are no changes to the use or significant impacts to parking. All

2514 Preserve trail,
Cedar Park, TX 78613
t +1 (512) 785 9034

texas engineering firm F-22721

2514 Preserve Trail,
Cedar Park, TX 78613
t +1 (512) 785 9034

updates are in compliance with the **Sweetwater Development Agreement**, which has been approved by **Robert Long, P.E.**, the engineer of record for the Sweetwater development.

Please let us know if you need any additional documentation or have any questions regarding the updated plans.

Respectfully Submitted,

Ahmed El Seweify

Ahmed El Seweify, PE

02/19/2026

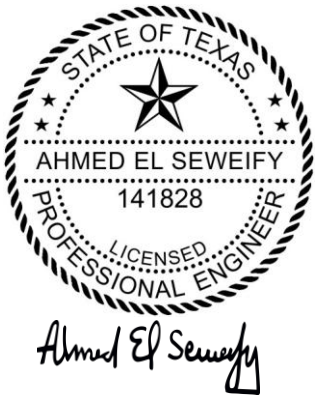

SHEET INDEX

SHEET NO.	DESCRIPTION
1	COVER SHEET
2	EXISTING PLAT
3	GENERAL NOTES
4	MUD GENERAL NOTES
5	EXISTING CONDITIONS
6	EXISTING DRAINAGE AREA MAP
7	EROSION & SEDIMENTATION CONTROL
8	EROSION & SEDIMENTATION DETAILS
9	STABILIZATION & RESTORATION PLAN
10	SITE PLAN & DIMENSIONS
11	SITE PLAN DETAIL-1
12	SITE PLAN DETAIL-2
13	SITE PLAN DETAIL-3
14	GRADING PLAN
15	DRAINAGE PLAN
16	STORM WATER PROFILE
17	STORM WATER PROFILE (2)
18	STORM WATER PROFILE (3)
19	DRAINAGE DETAILS
20	WATER & WASTEWATER PLAN
21	WATER & WASTEWATER DETAILS 1
22	WATER & WASTEWATER DETAILS 2
23	WATER & WASTEWATER DETAILS 3
24	PAVING PLAN
25	LANDSCAPE PLAN-1
26	LANDSCAPE PLAN -2
27	IRRIGATION -1
28	IRRIGATION -2
29	IRRIGATION -3

APPROVED FOR ACCEPTANCE:

TRAVIS COUNTY TNR

TRAVIS COUNTY PERMIT NUMBER — DATE

TRAVIS COUNTY ESD NO. 6 — DATE

LAZY NINE MUNICIPAL UTILITY DISTRICT 1A — DATE

PERMIT # 2023-4997 — 06/13/2023

LCRA — DATE

11000319 — 05/19/2023

TCEQ EAPP ID No. — DATE

NO.	DESCRIPTION	REVISE (R) ADD (A) VOID (V) SHEET NO.'S	TOTAL # SHEETS IN PLAN SET	NET CHANGE IMP. COVER (sq. ft.)	TOTAL SITE IMP. COVER (sq. ft.) [%]	APPROVAL/DATE	SIGN OFF	DATE IMAGED

THE STANDARD SHEETS SPECIFICALLY IDENTIFIED ABOVE HAVE BEEN SELECTED BY ME OR UNDER MY RESPONSIBLE SUPERVISION AS BEING APPLICABLE TO THIS PROJECT.

Ahmed El Seweify — November 12, 2025

AHMED EL SEWEIFY P.E. — DATE

MUD DISTRICT ENGINEER:
Dennis Lozano, P.E.
C: (512) 217.5636
E: dennisl@malonewheeler.com

UTILITIES:
PEDERNALES ELECTRIC COOP.
TIME WARNER CABLE
AT&T TELEPHONE
LAZY NINE MUNICIPAL UTILITY DISTRICT 1A
C/O ALLEN BOONE HUMPHRIES ROBINSON, LLP
1108 LAVACA STREET AUSTIN TX. 78701

IMPERVIOUS COVER

GRASS	46,870 SF	1.076 AC.	
BUILDING	28,050 SF	0.644 AC.	
CONCRETE	59,759 SF	1.371 AC.	
TOTAL	134,687 SF	3.092 AC.	
TOTAL IMPERVIOUS COVER			65.16%

SITE DEVELOPMENT PERMIT PLANS SWEETWATER LOT 3B



VICINITY MAP
N.T.S.

TRAVIS COUNTY ESD NO. 6 (512) 266-2533

DESIGN STANDARDS	2021 IFC WITH LOCAL AMENDMENTS
CONSTRUCTION CLASSIFICATION	II B
OCCUPANCY CLASSIFICATION	B
BUILDING AREA	28,050 SQ.FT.
BUILDING HEIGHT IN FEET	22'-0"
BUILDING HEIGHT IN STORIES	ONE-STORY
HIGH-RISE	NO
AUTOMATIC FIRE SPRINKLER SYSTEM	YES
REQUIRED FIRE FLOW @ 20 PSI	1500 GALLONS PER MINUTE
AVAILABLE FIRE FLOW @ 20 PSI	2655.1 GALLONS PER MINUTE

SITE AREAS

TOTAL DISTURBED AREA	127,761 SF	2.933 AC.
LIMIT OF CONSTRUCTION	127,761 SF	2.933 AC.
TOTAL AREA	134,600 SF	3.09 AC.

LANDSCAPE IRRIGATION WATER BUDGET

ZONE #	DESCRIPTION	HEAD TYPE	AREA (sf)	PRECIP RATE	GPM	RUN TIME (MINUTES)	GAL/CYCLE	OPERATING PRESSURE (PSI)	CENTRAL TX NATIVE PLANT LOW WATER USE
1	TURF	SPRAY	750	0.78	7.4	25	184	40	750
2	SHRUB	DRIP	1760	0.98	19.0	30	571	40	-
3	TURF	SPRAY	3263	0.54	20.3	25	508	40	3263
4	TREE	BUBBLER	366	5.22	16.0	12	192	40	-
5	SHRUB	DRIP	512	0.89	4.7	30	141	40	-
6	TURF	SPRAY	3598	0.47	19.0	25	476	40	2598
7	TREE	BUBBLER	366	4.92	16.0	12	192	40	-
8	TURF	SPRAY	3428	0.54	22.3	25	557	40	3428
9	TURF	SPRAY	4167	0.45	20.0	25	501	40	4167
10	SHRUB	DRIP	1770	0.91	16.7	30	502	40	-
11	TREE	BUBBLER	458	4.68	20.0	12	240	40	-
12	TURF	SPRAY	5129	0.4	20.8	25	521	40	5129
13	TURF	SPRAY	4550	0.42	22.4	25	560	40	4550
14	TREE	BUBBLER	458	4.66	20.0	12	240	40	-
15	TURF	SPRAY	5263	0.37	21.4	25	535	40	5263
16	TREE	BUBBLER	458	5.1	20.0	12	240	40	-
17	TURF	SPRAY	6270	0.32	21.9	25	548	40	6270
18	TURF	SPRAY	3482	0.48	19.7	25	492	40	3482
19	TURF	SPRAY	606	0.86	6.1	25	153	40	606
TOTAL						425	7353		
						LUEs	4		

LUE CALCULATION:
OFFICE/MEDICAL OFFICE - 15,768 SF X (1 LUE/3,000 SF) = 5.25
RETAIL - 7,885 SF X (1 LUE/1,660 SF) = 4.75
RESTAURANT - 3,000 X (1 LUE/200 SF) = 15.0

TOTAL LUES = 25

FLOODPLAIN INFORMATION:

THE TRACT SHOWN HEREON LIES WITHIN ZONE "X", (AREAS DETERMINED TO BE OUTSIDE 0.2% ANNUAL CHANCE FLOODPLAIN), AS IDENTIFIED BY THE FEDERAL EMERGENCY MANAGEMENT AGENCY, FEDERAL INSURANCE ADMINISTRATION, AS SHOWN ON MAP NO. 48453C0385J DATED 1/22/2020, FOR TRAVIS COUNTY, TEXAS.

LEGAL DESCRIPTION:

3.09 ACRE PORTION OF LOT 3 BLOCK C, SWEETWATER CROSSING PHASE ONE FINAL PLAT DOCUMENT NO. 201700299, OFFICIAL PUBLIC RECORDS, TRAVIS COUNTY, TEXAS

1. JURISDICTION: BEE CAVE ETJ
2. MAP GRID: WV26
3. WATERSHED: HIGHLAND LAKES WATERSHED.

ZONING OVERLAYS: BARTON SPRINGS ZONE
DRAINAGE PROVIDER: LAZY NINE MUD 1A

TRAFFIC CONTROL NOTE:

THE FOLLOWING MUST BE TAKEN INTO CONSIDERATION WHEN DEVELOPING FUTURE TRAFFIC CONTROL STRATEGIES:

- PEDESTRIAN AND BICYCLE TRAFFIC ACCESS MUST BE MAINTAINED AT ALL TIMES, UNLESS OTHERWISE AUTHORIZED BY RIGHT OF WAY MANAGEMENT.
- NO LONG-TERM LANE CLOSURES WILL BE AUTHORIZED, UNLESS RIGHT OF WAY MANAGEMENT DETERMINES THAT ADEQUATE ACCOMMODATIONS HAVE BEEN MADE TO MINIMIZE TRAFFIC IMPACT.
- PROJECT SHOULD BE PHASED SO THAT UTILITY INSTALLATION MINIMALLY IMPACTS EXISTING OR TEMPORARY PEDESTRIAN FACILITIES.

PRE-CONSTRUCTION NOTE:

SCHEDULE YOUR PROJECTS PRE-CONSTRUCTION MEETING THROUGH THE MYPERMITNOW.ORG ACCOUNT AFTER THE INITIAL 3RD. PARTY SWP3 INSPECTION REPORT HAS BEEN UPLOADED AND ALL PERMITS AND NOTICES HAVE BEEN POSTED, THEN FOLLOW UP WITH EMAILS TO THE ENVIRONMENTAL INSPECTOR AT ENV-INSPECTION@TRAVISCOUNTYTX.GOV AND THE ENGINEERING INSPECTOR, JOHNNY ANGLIN, AT JOHNNY.ANGLIN@TRAVISCOUNTYTX.GOV

GENERAL NOTE:

1. RELEASE OF THIS APPLICATION DOES NOT CONSTITUTE A VERIFICATION OF ALL DATA, INFORMATION, AND CALCULATIONS SUPPLIED BY THE APPLICANT. THE ENGINEER OF RECORD IS SOLELY RESPONSIBLE FOR THE COMPLETENESS, ACCURACY, AND ADEQUACY OF HIS/HER SUBMITTAL, WHETHER OR NOT THE APPLICATION IS REVIEWED FOR CODE COMPLIANCE BY CITY ENGINEERS.
2. ENGINEER WILL MAKE PERIODIC INSPECTIONS AND REPORTS OF THE SITE STATUS AND CONDITIONS DURING CONSTRUCTION TO ENSURE COMPLIANCE WITH THE PLANS AND TO ADDRESS ANY NECESSARY STRUCTURAL COMPLIANCE ITEMS.
3. ALL STRUCTURAL FIELD CHANGES REQUIRE A PLAN REVISION APPROVAL IN WRITING BEFORE COMMENCEMENT OF THE WORK.
4. THE APPLICANT/OWNER MUST COORDINATE WITH UTILITY COMPANIES PRIOR TO CONSTRUCTION.
5. CONTRACTOR SHALL COORDINATE CONTINUOUSLY AND NECESSARY WITH PROPERTY/BUSINESS OWNER TO MAINTAIN CONTINUATION OF TRAFFIC CONTROL AND ACCESS.
6. BE INFORMED THAT THE CONTRACTOR MUST OBTAIN A SEPARATE PERMIT TO WORK WITHIN THE COUNTY ROW.
7. THE ENGINEER WHO PREPARED THESE PLANS IS RESPONSIBLE FOR THEIR ADEQUACY. IN APPROVING THESE PLANS, TRAVIS COUNTY MUST RELY UPON THE ADEQUACY OF THE WORK OF THE DESIGN ENGINEER.
8. THIS SITE IS OVER THE EDWARDS AQUIFER CONTRIBUTING ZONE. A CZP IS REQUIRED.
9. ALL RESPONSIBILITY FOR THE ADEQUACY OF THESE PLANS REMAINS WITH THE ENGINEER WHO PREPARED THEM. IN REVIEWING THESE PLANS, LAZY NINE MUD 1A MUST RELY UPON THE ADEQUACY OF THE WORK OF THE DESIGN ENGINEER.

Water Demand Estimate and Meter Sizing Using Fixture Values
(Based on AWWA M22 Manual, Second Edition)

Project Number	Sweetwater Lot 3B
Building address or number	16620 Sweetwater Village Drive
Residential or Non-Residential	Non-Residential
Pressure Zone at Project	60

Fixture or Appliance	Fixture Value (at 60 psi)	Number of Fixtures	Subtotal Fixture Value
Toilet (tank)	4	4	16
Toilet (flush valve)	35	10	350
Urinal (wall or stall)	16		0
Urinal (flush valve)	35	3	105
Bidet	2		0
Shower (single head)	2.5		0
Sink (lavatory)	1.5	12	18
Kitchen Sink	2.2	15	33
Utility Sink	4	2	8
Dishwasher	2	6	12
Bathtub	8		0
Clothes Washer	6		0
Hose connections (with 50 ft of hose)			
1/2 in.	5	4	20
5/8 in.	9		0
3/4 in.	12	2	24
Miscellaneous			
Bedpan washers	10		0
Drinking fountains	2	4	8
Dental units	2		0
Combined Fixture Value			594
Demand (gpm)			96
Pressure Adjustment Factor			1
Total Adjusted demand (gpm)			**96**
Preliminary Demand Size			2"
Velocity (fps)			**9.8**
Required Meter Size			**2"**

PROJECT:
SWEETWATER LOT 3B

LOCATION:
16620 SWEETWATER VILLAGE DRIVE
BEE CAVE (ETJ)
TEXAS 78669

AES Professional Services LLC

project team

CIVIL ENGINEER:
AES Engineering Consultant
Ahmed El Seweify P.E.
2514 PRESERVE TRAIL, CEDAR PARK, TX 78613
Ph. (512) 785-9034
email: contact@aes-engs.com
Texas Firm F-22721

Owner Representative:
DORADO DEVELOPMENT
CONTACT: David Cummings
p 210.732.5335
e david@doradodev.com

Architect:
VILLA PARK ARCHITECTURE
CONTACT: MARK NEVILLE
p 210.384.8900
e mark@villapark.sa.com

GEOTECHNICAL ENGINEER
ROCK ENGINEERING & TESTING
10856 VANDALE ST. SAN ANTONIO TEXAS 78216
(210) 495-8000
WWW.ROCKTESTING.COM

SURVEY:
DELTA LAND SURVEYING
14900 AVERY RANCH BLVD. STE C200
AUSTIN, TX 78717
512-781-9800

2025-11-12

STATE OF TEXAS — AHMED EL SEWEIFY — 141828 — LICENSED PROFESSIONAL ENGINEER

Ahmed El Seweify

Texas 811 — Know what's below. Call before you dig.

REVISION	DATE	ISSUE TITLE

DRAWING TITLE:
COVER SHEET

PROJECT NO: 10-1072
DRAWN & CHECKED BY: AES
DATE: 2025-11-12
SCALE: NTS

SHEET NUMBER:
1 of 29

11/12/2025 12:54:35 PM

G:\My Drive\AES ENGINEERING\10-1072 SweetwaterCad\1 COVER SHEET.dwg

2019002251

STATE OF TEXAS
COUNTY OF TRAVIS

KNOW ALL MEN BY THESE PRESENTS THAT WS-COS INVESTMENTS, LLC, ACTING HEREIN AND THROUGH MICHAEL L. RAFFERTY, AUTHORIZED SIGNATORY, OWNER OF LOT 3, BLOCK "C", SWEETWATER CROSSING PHASE ONE FINAL PLAT, A SUBDIVISION IN TRAVIS COUNTY, TEXAS, RECORDED IN DOCUMENT NO. 201700251 OF THE OFFICIAL PUBLIC RECORDS OF TRAVIS COUNTY, TEXAS, DO HEREBY, SAID OWNER DOES HEREBY RESUBDIVIDE LOT 3, BLOCK "C", SWEETWATER CROSSING PHASE ONE FINAL PLAT, PURSUANT TO CHAPTER 232.009 OF THE LOCAL GOVERNMENT CODE OF TEXAS, IN ACCORDANCE WITH THIS PLAT, TO BE KNOWN AS "REVISED PLAT LOT 3, SWEETWATER CROSSING PHASE 1 LOT 3, BLOCK C", SUBJECT TO THE COVENANTS AND RESTRICTIONS SHOWN HEREON, AND HEREBY DEDICATES TO THE PUBLIC, THE USE OF ALL THE STREETS AND EASEMENTS SHOWN HEREON.

WITNESS MY HAND THIS 22 DAY OF October, 2019 A.D.

BY: _____
MICHAEL L. RAFFERTY, AUTHORIZED SIGNATORY
WS-COS INVESTMENTS, LLC
660 STEAMBOAT ROAD, 3RD FLOOR
GREENWICH, CT 06830

STATE OF TEXAS
COUNTY OF TRAVIS
BEFORE ME, THE UNDERSIGNED AUTHORITY, PERSONALLY APPEARED MICHAEL L. RAFFERTY, KNOWN TO ME TO BE THE PERSON WHOSE NAME IS SUBSCRIBED TO THE FOREGOING INSTRUMENT AND ACKNOWLEDGED TO ME THAT HE EXECUTED THE SAME FOR THE PURPOSES AND CONSIDERATION THEREIN EXPRESSED AND IN THE CAPACITY THEREIN STATED.

NOTARY PUBLIC IN AND FOR THE STATE OF TEXAS

MY COMMISION EXPIRES 05-26-2020 A.D.

ANGELA VALDI
Notary Public, State of Texas
Comm. Expires 05-26-2020
Notary ID 11543128-8

STATE OF TEXAS
COUNTY OF TRAVIS

KNOW ALL MEN BY THESE PRESENTS:

I, JOHN E BRAUTIGAM, AM AUTHORIZED UNDER THE LAWS OF THE STATE OF TEXAS TO PRACTICE THE PROFESSION OF SURVEYING AND DO HEREBY CERTIFY THAT THIS PLAT IS TRUE AND CORRECT AND WAS PREPARED FROM AN AN ACTUAL SURVEY OF THE PROPERTY MADE ON THE GROUND UNDER MY SUPERVISION, AND THAT THIS PLAT COMPLIES WITH CHAPTER 482, TRAVIS COUNTY SUBDIVISION REGULATIONS.

10-18-19
DATE

JOHN E BRAUTIGAM
REGISTERED PROFESSIONAL LAND SURVEYOR
STATE OF TEXAS
DELTA SURVEY GROUP, INC.
8213 BRODIE LANE, STE 102
AUSTIN, TEXAS 78745
TBPLS FIRM NO. 10004700

NO PORTION OF THIS SUBDIVISION LIES WITHIN THE DESIGNATED 100 YEAR FLOOD PLAIN AS DEFINED BY F.E.M.A. MAP 48453C0585H DATED SEPTEMBER 26, 2008.

I, DANIEL J. BROWN, AM AUTHORIZED UNDER THE LAWS OF THE STATE OF TEXAS, TO PRACTICE THE PROFESSION OF ENGINEERING, AND DO HEREBY CERTIFY THAT THIS PLAT IS FEASIBLE FROM AN ENGINEERING STANDPOINT, AND IS TRUE AND CORRECT TO THE BEST OF MY KNOWLEDGE, AND THAT THIS PLAT COMPLIES WITH CHAPTER 482, TRAVIS COUNTY SUBDIVISION REGULATIONS.

DANIEL J. BROWN, P.E.
REGISTERED PROFESSIONAL ENGINEER NO. 98337
MALONE/WHEELER, INC.
5113 SOUTHWEST PARKWAY, SUITE 260
AUSTIN, TEXAS 78735
FIRM REGISTRATION NO. T-786

LOWER COLORADO RIVER AUTHORITY — DATE 10/18/2019

DANIEL J. BROWN
98337
10-18-19

PERMIT PLAT NOTE:

ALL PROPERTY HEREIN IS SUBJECT TO THE LOWER COLORADO RIVER AUTHORITY'S HIGHLAND LAKES WATERSHED ORDINANCE. WRITTEN NOTIFICATION AND/OR PERMITS ARE REQUIRED PRIOR TO COMMENCING ANY DEVELOPMENT ACTIVITIES. CONTACT LCRA MANAGEMENT AT 1-800-776-5272, EXTENTION 2324 FOR MORE INFORMATION.

IN APPROVING THIS PLAT, THE COMMISSIONERS COURT OF TRAVIS COUNTY, TEXAS, ASSUMES NO OBLIGATION TO BUILD STREETS, ROADS, AND OTHER PUBLIC THOROUGHFARES SHOWN ON THIS PLAT OR ANY BRIDGES OR CULVERTS IN CONNECTION THEREWITH. THE BUILDING OF ALL STREETS, ROADS, OR OTHER PUBLIC THOROUGHFARES, SHOWN ON THIS PLAT AND ALL BRIDGES AND CULVERTS NECESSARY TO BE CONSTRUCTED OR PLACED IN SUCH STREETS, ROADS, OR OTHER PUBLIC THOROUGHFARES OR IN CONNECTION THEREWITH, IS THE RESPONSIBILITY OF THE OWNER AND OR DEVELOPER OF THE TRACT OF LAND COVERED BY THIS PLAT IN ACCORDANCE WITH PLANS AND SPECIFICATIONS, PRESCRIBED BY THE COMMISSIONER'S COURT OF TRAVIS COUNTY, TEXAS.

THE OWNER(S) OF THE SUBDIVISION SHALL CONSTRUCT THE SUBDIVISION'S STREET AND DRAINAGE IMPROVEMENTS (THE "IMPROVEMENTS") TO COUNTY STANDARDS IN ORDER FOR THE COUNTY TO ACCEPT THE PUBLIC IMPROVEMENTS FOR MAINTENANCE OR TO RELEASE FISCAL SECURITY POSTED TO SECURE THE PUBLIC IMPROVEMENTS. THE OWNER(S) OF THE SUBDIVISION MUST POST FISCAL SECURITY WITH THE COUNTY IN THE ESTIMATED SUM COST OF THE IMPROVEMENTS. THE OWNER(S) MUST ALSO CONSTRUCT THE IMPROVEMENTS TO THE COUNTY STANDARDS AND TO POST THE FISCAL SECURITY TO SECURE SUCH CONSTRUCTION IS A CONTINUING OBLIGATION BINDING ON THE OWNERS AND THEIR SUCCESSORS AND ASSIGNS UNTIL THE PUBLIC IMPROVEMENTS HAVE BEEN ACCEPTED FOR MAINTENANCE BY THE COUNTY, OR PRIVATE IMPROVEMENTS HAVE BEEN CONSTRUCTED AND ARE PERFORMING TO COUNTY STANDARDS.

STATE OF TEXAS:
COUNTY OF TRAVIS:

I, DANA DEBEAUVOIR, CLERK OF THE COUNTY COURT, OF TRAVIS COUNTY, TEXAS, DO HEREBY CERTIFY THAT ON THE 2nd DAY OF December A.D., THE COMMISSIONERS COURT OF TRAVIS COUNTY, TEXAS, PASSED AN ORDER AUTHORIZING THE FILING FOR RECORD OF THIS PLAT AND THAT SAID ORDER WAS DULY ENTERED IN THE MINUTES OF SAID COURT.

WITNESS MY HAND AND SEAL OF OFFICE OF THE COUNTY COURT OF SAID COUNTY, THE 9 DAY OF December 2019 A.D.

DANA DEBEAUVOIR, COUNTY CLERK
TRAVIS COUNTY, TEXAS

DEPUTY _____
GILLIAN PORTER

STATE OF TEXAS:
COUNTY OF TRAVIS:

I, DANA DEBEAUVOIR, CLERK OF TRAVIS COUNTY, TEXAS DO HEREBY CERTIFY THAT THE FOREGOING INSTRUMENT OF WRITING AND ITS CERTIFICATE OF AUTHENTICATION WAS FILED FOR RECORD IN MY OFFICE ON THE 5th DAY OF December 2019 A.D. AT 11:23 O'CLOCK A. M., DULY RECORDED ON THE 9th DAY OF December 2019 A.D. AT 11:15 O'CLOCK A. M., PLAT RECORDS OF SAID COUNTY AND STATE IN DOCUMENT NO. 201900251 OFFICIAL PUBLIC RECORDS OF TRAVIS COUNTY.

WITNESS MY HAND AND SEAL OF OFFICE OF THE COUNTY CLERK, THIS 9 DAY OF December 2019 A.D.

DANA DEBEAUVOIR, COUNTY CLERK,
TRAVIS COUNTY, TEXAS

DEPUTY _____
RICK TOMS

THIS SUBDIVISION IS NOT LOCATED IN THE CITY OF AUSTIN'S EXTRA-TERRITORIAL JURISDICTION.

2019002251

NOTES:

1. OWNER OF THIS SUBDIVISION, AND HIS OR HER SUCCESSORS AND ASSIGNS, ASSUMES RESPONSIBILITY FOR PLANS FOR CONSTRUCTION OF SUBDIVISION IMPROVEMENTS WHICH COMPLY WITH APPLICABLE CODES AND REQUIREMENTS OF TRAVIS COUNTY. THE OWNER UNDERSTANDS AND ACKNOWLEDGES THAT PLAT VACATION OR REPLATTING MAY BE REQUIRED, AT THE OWNER'S SOLE EXPENSE, IF PLANS TO CONSTRUCT THIS SUBDIVISION DO NOT COMPLY WITH SUCH CODES AND REQUIREMENTS.
2. FOR A MINIMUM TRAVEL DISTANCE OF 25 FEET FROM THE ROADWAY EDGE, DRIVEWAY GRADES MAY EXCEED 14% ONLY WITH THE SPECIFIC WRITTEN APPROVAL OF THE SURFACE AND GEOMETRIC DESIGN PROPOSALS BY THE TRAVIS COUNTY TRANSPORTATION AND NATURAL RESOURCES.
3. WASTEWATER SYSTEMS SERVING THIS SUBDIVISION SHALL BE DESIGNED AND INSTALLED IN ACCORDANCE WITH LAZY NINE MUNICIPAL DISTRICT 1A PLANS AND SPECIFICATIONS. PLANS AND SPECIFICATION SHALL BE SUBMITTED TO LAZY NINE MUNICIPAL DISTRICT 1A FOR REVIEW.
4. NO PORTION OF THIS TRACT IS LOCATED WITHIN THE EDWARDS AQUIFER RECHARGE ZONE.
5. THIS SUBDIVISION IS SUBJECT TO A PHASING AGREEMENT RECORDED AS DOCUMENT NO. 2017066680, OF THE OFFICIAL PUBLIC RECORDS, TRAVIS COUNTY, TEXAS.
6. MUNICIPAL JURISDICTION: THIS PLAT BOUNDARY FALLS OUTSIDE C.O.A. ETJ, LAKEWAY ETJ, AND WILL BE REGULATED BY TRAVIS COUNTY. MUNICIPAL JURISDICTION - BEE CAVE ETJ.
7. THIS SUBDIVISION IS SUBJECT TO THE COVENANTS AND RESTRICTIONS RECORDED AS DOCUMENT NO. 2017032085, OFFICIAL PUBLIC RECORDS, TRAVIS COUNTY, TEXAS
8. DRIVEWAYS SHALL NOT BE CONSTRUCTED CLOSER THAN 50 FEET OR 60% OF THE LOT'S FRONTAGE TO THE EDGE OF PAVEMENT OF AN INTERSECTING LOCAL OR COLLECTOR STREET.
9. A TRAVIS COUNTY DEVELOPMENT PERMIT IS REQUIRED PRIOR TO ANY SITE DEVELOPMENT.
10. DRAINAGE EASEMENTS GREATER THAN 25 FEET WIDE CAN BE USED FOR OPEN CHANNEL OR ENCLOSED CONDUIT SYSTEMS. DRAINAGE EASEMENTS 15 FEET WIDE ARE FOR ENCLOSED CONDUIT DRAINAGE SYSTEMS ONLY.
11. THIS SUBDIVISION IS LOCATED WITHIN THE BOUNDARIES OF THE LAZY NINE MUNICIPAL DISTRICT 1A. WATER AND WASTEWATER SERVICE TO THIS SUBDIVISION WILL BE PROVIDED BY THE DISTRICT IN ACCORDANCE WITH ITS RATE ORDER, AS AMENDED. ALL CONSTRUCTION PLANS FOR WATER, WASTEWATER, AND STORM DRAINAGE IMPROVEMENTS MUST BE PRESENTED TO THE DISTRICT AND APPROVED BY THE DISTRICT'S ENGINEER, PRIOR TO BEGINNING CONSTRUCTION ACTIVITIES. THE DISTRICT MAY INSPECT ALL WATER, WASTEWATER, AND STORM DRAINAGE IMPROVEMENTS.
12. NO OBJECTS, INCLUDING BUT NOT LIMITED TO BUILDINGS, FENCES, LANDSCAPING OR OTHER STRUCTURES SHALL BE ALLOWED IN DRAINAGE EASEMENTS AND WATER QUALITY EASEMENTS EXCEPT AS APPROVED BY LCRA AND TRAVIS COUNTY.
13. ALL STREET RIGHT-OF-WAY ARE ALSO DRAINAGE EASEMENTS, WATER AND WASTEWATER EASEMENTS, AND GAS EASEMENTS AS PROVIDED BY LAZY NINE MUNICIPAL UTILITY DISTRICT 1A.
14. ALL WATER QUALITY AND DRAINAGE EASEMENTS SHALL BE MAINTAINED BY THE LAZY NINE MUNICIPAL UTILITY DISTRICT 1A.
15. WITHIN A SIGHT LINE EASEMENT ANY OBSTRUCTION OF SIGHT LINE BY VEGETATION, FENCING, EARTHWORK, BUILDINGS, SIGNS OR ANY OTHER OBJECT WITH IS DETERMINED TO CAUSE A TRAFFIC HAZARD IS PROHIBITED AND MAY BE REMOVED BY ORDER OF THE TRAVIS COUNTY COMMISSIONERS COURT AT THE OWNER'S EXPENSE. THE PROPERTY OWNER IS TO MAINTAIN AN UNOBSTRUCTED VIEW CORRIDOR WITHIN THE BOUNDS OF SUCH EASEMENT AT ALL TIMES.
16. NO LOT SHALL BE OCCUPIED UNTIL CONNECTED TO AN APPROVED PUBLIC SEWER SYSTEM.
17. NO LOT SHALL BE OCCUPIED UNTIL WATER IS AVAILABLE TO EACH LOT.
18. ALL LOTS IN THIS SUBDIVISION ARE RESTRICTED TO USES OTHER THAN RESIDENTIAL.
21. DRAINAGE PLANS SHALL BE SUBMITTED TO TRAVIS COUNTY FOR REVIEW PRIOR TO SITE DEVELOPMENT. RAINFALL RUN-OFF SHALL BE HELD TO THE AMOUNT EXISTING AT UNDEVELOPED STATUS BY PONDING OR OTHER APPROVED METHODS.
22. ALL NOTES AND RESTRICTIONS FROM ORIGINAL SUBDIVISION SWEETWATER CROSSING PHASE I SHALL APPLY TO THIS REVISED PLAT.
23. NO DIRECT ACCESS TO STATE HIGHWAY 71 SHALL BE ALLOWED FOR LOT 3A, BLOCK C.

BENCHMARK LIST

BM-2: COTTON SPINDLE SET IN 28"25' 10"R" LIVE OAK # 113
ELEV. = 1146.48'

BM-4: COTTON SPINDLE SET IN 15" LIVE OAK # 193
ELEV. = 1140.38'

BM-5 "SQUARE" CUT IN CONCRETE BASE OF TRAFFIC SIGNAL POLE
ELEV. = 1137.26'

SURVEY CONTROL DATA
TEXAS STATE PLANE COORDINATE SYSTEM, CENTRAL ZONE, NADS83/CORS
PROJECT CONTROL POINTS WERE ESTABLISHED USING THE 'SMARTNET' RTK NETWORK.

SURVEY CONTROL MONUMENT
C.O.A. MONUMENT 5344
GRID COORDINATES
N=10035782.19
E=3107351.13
C.S.F. = 0.99997207
ELEVATION = 678.33' NAVD 88

VICINITY MAP



LAND USE:	ACREAGE:
LOT 3A BLOCK C: COMMERCIAL	1.64 ACRES
LOT 3B BLOCK C: COMMERCIAL	3.09 ACRES
TOTAL	4.73 ACRES

2019002251

C. WOLF SURVEY NO. 182
TRAVIS COUNTY, TEXAS
JUNE 2019

GRAPHIC SCALE
1" = 100'

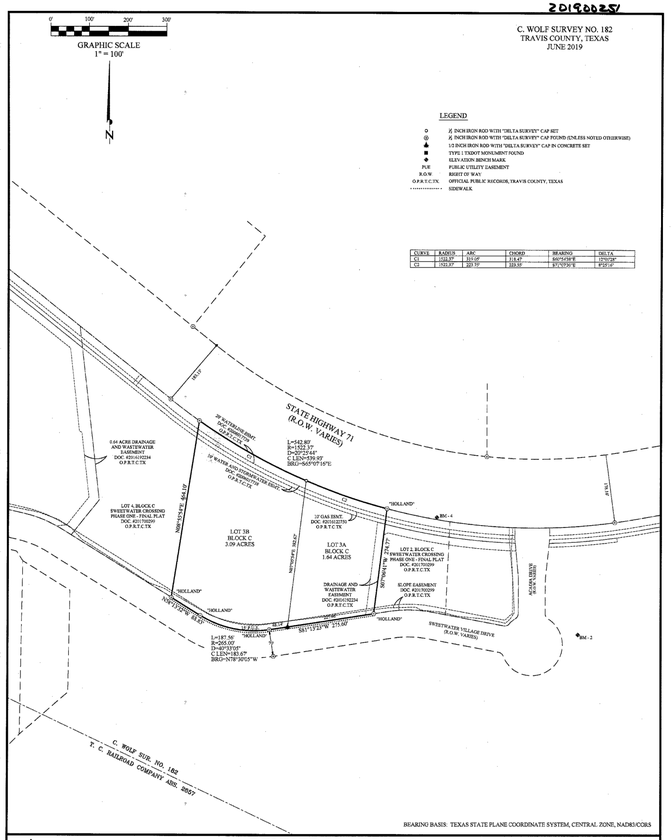

CURVE	RADIUS	ARC	CHORD	BEARING	DELTA
C1	1522.57'	542.80'	539.97'	S67°07'15"E	20°25'44"
C2	1362.50'	189.70'	189.55'	N73°57'35"E	7°58'53"

BEARING BASIS: TEXAS STATE PLANE COORDINATE SYSTEM, CENTRAL ZONE, NADS83/CORS

PROJECT:

SWEETWATER LOT 3B

LOCATION:

16620 SWEETWATER
VILLAGE DRIVE
BEE CAVE (ETJ)
TEXAS 78669

AES Professional Services LLC

project team

CIVIL ENGINEER:
AES Engineering Consultant
Ahmed El Seweify P.E.
2514 PRESERVE TRAIL, CEDAR PARK, TX 78613
Ph. (512) 785-9034
email: contact@aes-engs.com
Texas Firm F-22721

Owner Representative:
DORADO DEVELOPMENT
CONTACT: David Cummings
p 210.732.5335
e david@doradodev.com

Architect:
VILLA PARK ARCHITECTURE
CONTACT: MARK NEVILLE
p 210.384.8900
e mark@villapark.sa.com

GEOTECHNICAL ENGINEER
ROCK ENGINEERING & TESTING
10856 VANDALE ST. SAN ANTONIO TEXAS 78216
(210) 495-8000
WWW.ROCKTESTING.COM

SURVEY:
DELTA LAND SURVEYING
14900 AVERY RANCH BLVD. STE C200
AUSTIN, TX 78717
512-781-9800

2025-11-12

STATE OF TEXAS
AHMED EL SEWEIFY
141828
LICENSED
PROFESSIONAL ENGINEER

Ahmed El Seweify

Texas 811
Know what's below.
Call before you dig.

REVISION	DATE	ISSUE TITLE

DRAWING TITLE:

EXISTING PLAT

PROJECT NO:	DRAWN & CHECKED BY:
10-1072	AES
DATE:	SCALE:
2025-11-12	NTS

SHEET NUMBER:

2 of 29

G:\My Drive\AES ENGINEERING\10-1072 Sweetwater\cad\02 EXISTING PLAT (1).dwg

3/29/2025 5:58:47 PM

TRAVIS COUNTY NOTES:

EXHIBIT 482.301B TRAVIS COUNTY STANDARD CONSTRUCTION NOTES FOR SITE DEVELOPMENT

1. EACH DRIVEWAY MUST BE CONSTRUCTED IN ACCORDANCE WITH TRAVIS COUNTY CODE SECTION 482.302(G), AND EACH DRAINAGE STRUCTURE OR SYSTEM MUST BE CONSTRUCTED IN ACCORDANCE WITH THE CITY OF AUSTIN DRAINAGE CRITERIA MANUAL, UNLESS OTHER DESIGN CRITERIA ARE APPROVED BY TRAVIS COUNTY.

2. BEFORE BEGINNING ANY CONSTRUCTION, THE OWNER MUST OBTAIN A TRAVIS COUNTY DEVELOPMENT PERMIT AND POST THE DEVELOPMENT PERMIT, THE TCEQ SITE NOTICE, AND ANY OTHER REQUIRED PERMITS AT THE JOB SITE.

3. CONSTRUCTION MAY NOT TAKE PLACE WITHIN TRAVIS COUNTY RIGHT-OF-WAY UNTIL AFTER THE OWNER HAS SUBMITTED A TRAFFIC CONTROL PLAN TO TRAVIS COUNTY AND OBTAINED WRITTEN APPROVAL OF THE TRAFFIC CONTROL PLAN FROM TRAVIS COUNTY.

4. THE CONTRACTOR AND PRIMARY OPERATOR SHALL FOLLOW THE SEQUENCE OF CONSTRUCTION AND THE SWP3 IN THESE APPROVED PLANS. THE CONTRACTOR AND PRIMARY OPERATOR HALL REQUEST TRAVIS COUNTY INSPECTION AT SPECIFIC MILESTONES IN THE SEQUENCE OF THE CONSTRUCTION OF THE SITE DEVELOPMENT CORRESPONDING TO THE PRIORITY INSPECTIONS SPECIFIED IN CONSTRUCTION SEQUENCING NOTES IN THESE APPROVED PLANS. DEVELOPMENT OUTSIDE THE LIMITS OF CONSTRUCTION SPECIFIED IN THE APPROVED PERMIT AND CONSTRUCTION PLANS IS PROHIBITED.

5. BEFORE BEGINNING ANY CONSTRUCTION, ALL STORM WATER POLLUTION PREVENTION PLAN (SWP3) REQUIREMENTS SHALL BE MET, AND THE FIRST PHASE OF THE TEMPORARY EROSION CONTROL (ESC) PLAN INSTALLED WITH A SWP3 INSPECTION REPORT UPLOADED TO MYPERMITNOW.ORG. ALL SWP3 AND ESC PLAN MEASURES AND PRIMARY OPERATOR SWP3 INSPECTIONS MUST BE PERFORMED BY THE PRIMARY OPERATOR IN ACCORDANCE WITH THE APPROVED PLANS AND SWP3 AND ESC PLAN NOTES THROUGHOUT THE CONSTRUCTION PROCESS.

6. BEFORE STARTING CONSTRUCTION, THE OWNER OR CONTRACTOR OR THEIR DESIGNATED REPRESENTATIVES SHALL SUBMIT A REQUEST VIA THE MYPERMITNOW.ORG CUSTOMER PORTAL FOR TRAVIS COUNTY TO REQUEST AND SCHEDULE A MANDATORY PRECONSTRUCTION CONFERENCE AND ESC INSPECTION. IF FURTHER ASSISTANCE IS NEEDED, THE TNR PLANNING AND ENGINEERING DIVISION STAFF OR TNR STORM WATER MANAGEMENT PROGRAM STAFF CAN BE CONTACTED BY TELEPHONE AT 512-854-9383.

7. THE CONTRACTOR SHALL KEEP TRAVIS COUNTY TNR ASSIGNED INSPECTION STAFF CURRENT ON THE STATUS OF SITE DEVELOPMENT AND UTILITY CONSTRUCTION. THE CONTRACTOR SHALL NOTIFY TRAVIS COUNTY AND REQUEST PRIORITY INSPECTIONS THROUGH THE MYPERMITNOW.ORG CUSTOMER PORTAL FOR TRAVIS COUNTY IN ACCORDANCE WITH THE SPECIFIC MILESTONES IN THE CONSTRUCTION SEQUENCING NOTES IN THESE

APPROVED PLANS.

8. CONTOUR DATA SOURCE: DELTA SURVEY GROUP INC. 8213 BRODIE LANE STE. 102 AUSTIN, TX 78745.

9. FILL MATERIAL MUST BE MANAGED AND DISPOSED OF IN ACCORDANCE WITH ALL REQUIREMENTS SPECIFIED IN THE APPROVED PLANS, SWP3, AND THE TRAVIS COUNTY CODE. THE CONTRACTOR SHALL STOCKPILE FILL AND CONSTRUCTION MATERIALS ONLY IN THE AREAS DESIGNATED ON THE APPROVED PLANS AND NOT WITHIN THE 100-YEAR FLOOD PLAIN, WATERWAY SETBACK, CRITICAL ENVIRONMENTAL FEATURE SETBACK, OR OUTSIDE THE LIMITS OF CONSTRUCTION. DISPOSAL OF SOLID WASTE MATERIALS, AS DEFINED BY STATE LAW (E.G., LITTER, TIRES, DECOMPOSABLE WASTES, ETC.) IS PROHIBITED IN PERMANENT FILL SITES.

10. BEFORE DISPOSING ANY EXCESS FILL MATERIAL OFF-SITE, THE CONTRACTOR OR PRIMARY OPERATOR MUST PROVIDE THE COUNTY INSPECTOR DOCUMENTATION THAT DEMONSTRATES THAT ALL REQUIRED PERMITS FOR THE PROPOSED DISPOSAL SITE LOCATION, INCLUDING TRAVIS COUNTY, TCEQ NOTICE, AND OTHER APPLICABLE DEVELOPMENT PERMITS, HAVE BEEN OBTAINED. THE OWNER OR PRIMARY OPERATOR MUST REVISE THE SWP3 AND ESC PLAN IF HANDLING OR PLACEMENT OF EXCESS FILL ON THE CONSTRUCTION SITE IS REVISED FROM THE EXISTING SWP3. IF THE FILL DISPOSAL LOCATION IS OUTSIDE TRAVIS COUNTY OR DOES NOT REQUIRE A DEVELOPMENT PERMIT, THE CONTRACTOR OR PRIMARY OPERATOR MUST PROVIDE THE COUNTY INSPECTOR THE SITE ADDRESS, CONTACT INFORMATION FOR THE PROPERTY OWNER OF THE FILL.

11. THE DESIGN ENGINEER IS RESPONSIBLE FOR THE ADEQUACY OF THE CONSTRUCTION PLANS. REVIEWING THE CONSTRUCTION PLANS, TRAVIS COUNTY WILL RELY UPON THE ADEQUACY OF THE WORK OF THE DESIGN ENGINEER.

12. IN THE EVENT OF ANY CONFLICTS BETWEEN THE CONTENT IN THE SWP3 SITE NOTEBOOK AND THE CONTENT IN THE CONSTRUCTION PLANS APPROVED BY TRAVIS COUNTY, THE CONSTRUCTION PLANS SHALL TAKE PRECEDENCE.

13. A MINIMUM OF TWO SURVEY BENCHMARKS SHALL BE SET, INCLUDING DESCRIPTION, LOCATION, AND ELEVATION; THE BENCHMARKS SHOULD BE TIED TO A TRAVIS COUNTY CONTROL BENCHMARK WHEN POSSIBLE.

14. ANY EXISTING PAVEMENT, CURBS, SIDEWALKS, OR DRAINAGE STRUCTURES WITHIN COUNTY RIGHT-OF-WAY WHICH ARE DAMAGED, REMOVED, OR SILTED, WILL BE REPAIRED BY THE CONTRACTOR AT OWNER OR CONTRACTOR'S EXPENSE BEFORE APPROVAL AND ACCEPTANCE OF THE CONSTRUCTION BY TRAVIS COUNTY.

15. CALL THE TEXAS EXCAVATION SAFETY SYSTEM AT 8-1-1 AT LEAST 2 BUSINESS DAYS BEFORE BEGINNING EXCAVATION ACTIVITIES.

16. ALL STORM SEWER PIPES SHALL BE CLASS III RCP, UNLESS OTHERWISE NOTED.

17. CONTRACTOR IS REQUIRED TO OBTAIN A UTILITY INSTALLATION PERMIT IN ACCORDANCE WITH TRAVIS COUNTY CODE SECTION 482.901(A)(3) BEFORE ANY CONSTRUCTION OF UTILITIES WITHIN ANY TRAVIS COUNTY RIGHT-OF-WAY.

18. THIS PROJECT IS LOCATED ON FLOOD INSURANCE RATE MAP 48453C0385H DATED SEPTEMBER 26,2008.

19. TEMPORARY STABILIZATION MUST BE PERFORMED IN ALL DISTURBED AREAS THAT HAVE CEASED CONSTRUCTION ACTIVITIES FOR 14 DAYS OR LONGER, IN ACCORDANCE WITH THE STANDARDS DESCRIBED IN THE SWP3 AND ESC PLAN SHEET NOTES.

20. PERMANENT SITE STABILIZATION/RE-VEGETATION MUST BE PERFORMED IMMEDIATELY IN ALL SITE AREAS WHICH ARE AT FINAL PLAN GRADE AND IN ALL SITE AREAS SPECIFIED IN THE APPROVED PLANS FOR PHASED RE-VEGETATION, IN ACCORDANCE WITH THE STANDARDS DESCRIBED IN THE SWP3 AND ESC PLAN SHEET NOTES.

21. ALL TREES WITHIN THE RIGHT-OF-WAY AND DRAINAGE EASEMENTS SHALL BE SAVED OR REMOVED IN ACCORDANCE WITH THE APPROVED CONSTRUCTION PLANS. TRAVIS COUNTY TREE PRESERVATION STANDARDS IN TRAVIS COUNTY CODE SECTION 482.973, INCLUDING INSTALLATION AND MAINTENANCE OF ALL SPECIFIED TREE PROTECTION MEASURES, MUST BE FOLLOWED DURING CONSTRUCTION.

22. AN ENGINEER'S CONCURRENCE LETTER IN ACCORDANCE WITH TRAVIS COUNTY CODE SECTION 482.953 MUST BE SUBMITTED VIA THE MYPERMITNOW.ORG CUSTOMER PORTAL FOR TRAVIS COUNTY WHEN CONSTRUCTION IS SUBSTANTIALLY COMPLETE. THE ENGINEER'S CONCURRENCE LETTER MUST BE SUBMITTED BEFORE THE CONTRACTOR OR PRIMARY OPERATOR REQUESTS A FINAL INSPECTION BY TRAVIS COUNTY.

23. SITE IMPROVEMENTS MUST BE CONSTRUCTED IN CONFORMANCE WITH THE ENGINEER'S CONSTRUCTION PLANS APPROVED BY TRAVIS COUNTY. NON-CONFORMANCE WITH THE APPROVED PLANS WILL DELAY FINAL INSPECTION APPROVAL BY THE COUNTY UNTIL PLAN CONFORMANCE IS ACHIEVED OR ANY REQUIRED PLAN REVISIONS ARE APPROVED.

24. FINAL SITE STABILIZATION. ALL AREAS DISTURBED BY THE CONSTRUCTION MUST BE PERMANENTLY REVEGETATED AND ALL TEMPORARY SEDIMENT CONTROLS AND ACCUMULATED SEDIMENTATION MUST BE REMOVED BEFORE THE COUNTY WILL ISSUE A CERTIFICATE OF COMPLIANCE FOR FINAL SITE STABILIZATION AS PART OF FINAL INSPECTION AND PROJECT COMPLETION. A DEVELOPERS CONTRACT, AS DESCRIBED IN THE SWP3 AND ESC NOTES SHEET MAY BE EXECUTED WITH TRAVIS COUNTY FOR CONDITIONAL ACCEPTANCE OF A PROJECT FOR WHICH HAS ESC FISCAL SECURITY POSTED AND FOR WHICH ALL ITEMS ARE COMPLETE.

482.1004 [EXHIBIT 482.301G SEQUENCE OF CONSTRUCTION AND PRIORITY INSPECTIONS - SITE DEVELOPMENT]

EXHIBIT 482.301E. SEQUENCE OF CONSTRUCTION AND PRIORITY INSPECTIONS - SITE DEVELOPMENT

THE OWNER AND PRIMARY OPERATOR MUST FOLLOW THIS BASIC SEQUENCE OF CONSTRUCTION FOR EACH SITE DEVELOPMENT, INCLUSIVE OF ALL NON-RESIDENTIAL SITE DEVELOPMENT PROJECTS. WITHIN THE FOLLOWING SEQUENCE OF CONSTRUCTION ARE LISTED PRIORITY INSPECTIONS THAT THE OWNER AND PRIMARY OPERATOR MUST REQUEST FROM A REPRESENTATIVE OF TRAVIS COUNTY'S STORM WATER MANAGEMENT PROGRAM INSPECTION TEAM. EACH PRIORITY INSPECTION MUST BE REQUESTED ONLINE THROUGH THE MYPERMITNOW.ORG CUSTOMER PORTAL FOR TRAVIS COUNTY. THE PRIORITY INSPECTIONS IN THIS EXHIBIT ARE CONSISTENT WITH THE PRIORITY INSPECTIONS FOUND IN THE CUSTOMER PORTAL FOR THE PROJECT. FOR ASSURANCE PURPOSES, A SECOND REQUEST TO TRAVIS COUNTY IS STRONGLY ENCOURAGED BY ADDITIONALLY SENDING AN E-MAIL TO ENVINSPECT@TRAVISCOUNTYTX.GOV.

THE SEQUENCE FOR ITEMS 1-4 AND ITEMS 9-12 MUST NOT BE ALTERED, BUT THE SEQUENCE FOR ITEMS 5-8 MAY BE MODIFIED WITH THE WRITTEN APPROVAL OF THE COUNTY.

1. ESC INSTALLATION. INSTALL ALL TEMPORARY EROSION AND SEDIMENT CONTROLS (ESC) AND TREE PROTECTION MEASURES IN ACCORDANCE WITH THE APPROVED ESC PLAN SHEETS AND THE SWP3.

a. HAVE A QUALIFIED INSPECTOR (AS SPECIFIED IN SECTION 482.934(C)(3) OF THE TRAVIS COUNTY CODE) INSPECT THE TEMPORARY EROSION AND SEDIMENT CONTROLS AND PREPARE A CERTIFIED SWP3 INSPECTION REPORT REGARDING WHETHER THE TEMPORARY EROSION AND SEDIMENT CONTROLS WERE INSTALLED IN
CONFORMANCE WITH THE APPROVED PLANS;

b. UPLOAD THE QUALIFIED INSPECTOR'S CERTIFIED SWP3 INSPECTION REPORT TO THE MYPERMITNOW.ORG CUSTOMER PORTAL FOR TRAVIS COUNTY; AND REQUEST A MANDATORY PRE-CONSTRUCTION MEETING WITH TRAVIS COUNTY THROUGH THE MYPERMITNOW.ORG CUSTOMER PORTAL FOR TRAVIS COUNTY GIVING AT LEAST 3 BUSINESS DAYS NOTIFICATION.

PUBLIC WATER, WASTEWATER, DRAINAGE AND TREATED EFFLUENT FACILITIES SHALL BE PER LAZY NINE MUD 1A REQUIREMENTS.

UTILITY CONTACT FOR WATER, WASTEWATER AND STORM SEWER:
LAZY NINE MUD 1A
DENNIS LOZANO, P.E.
LAZY NINE MUD 1A DISTRICT ENGINEER
DENNIS@MALONEWHEELER.COM
(512) 899-0601

UTILITY CONTACTS FOR LAZY NINE MUD AND LAZY NINE MUD OPERATOR:
CROSSROADS UTILITY SERVICES
dtatum@crossroadsus.com
512.217.5636
512.820.8459

2. PRE-CONSTRUCTION MEETING AND ESC INSPECTION. HOLD A MANDATORY PRECONSTRUCTION MEETING THAT ADDRESSES THE ITEMS IN EXHIBIT 482.950 AND THE ESC PRE-CONSTRUCTION INSPECTION BY THE COUNTY AND OBTAIN COUNTY'S APPROVAL TO START CONSTRUCTION. (PRIORITY INSPECTION)

3. INSPECT FOR COMPLIANCE WITH SWP3 AND ESC PLAN. MAINTAIN AND INSPECT THE SWP3 CONTROLS AND PREPARE AND UPLOAD A WEEKLY CERTIFIED SWP3 INSPECTION REPORT THAT INCLUDES THE CONTENTS LISTED IN EXHIBIT 482.951 TO THE MYPERMITNOW.ORG CUSTOMER PORTAL FOR TRAVIS COUNTY.

4. CONSTRUCT SEDIMENT BASIN(S). CONSTRUCT ANY STORM WATER POND(S) FIRST, WHENEVER APPLICABLE, TO BE FUNCTIONAL AS CONSTRUCTION SEDIMENT BASIN(S) BEFORE GRADING AND EXCAVATING THE ENTIRE SITE, AS FOLLOWS:

a. CLEAR, GRUB, AND EXCAVATE ONLY THE SITE AREAS AND CUT AND FILL QUANTITIES NECESSARY TO CONSTRUCT THE POND(S) IN ACCORDANCE WITH THESE APPROVED PLANS AND THE MINIMUM STANDARDS DESCRIBED IN THE SWP3 AND ESC PLAN SHEET NOTES FOR THE TEMPORARY SEDIMENT BASIN EMBANKMENTS,
WALLS, INFLOWS, OUTFALLS, DRAINAGE CONVEYANCE MEASURES, SEDIMENT CONTROLS, AND STABILIZATION.
b. REQUEST COUNTY INSPECTION AND OBTAIN COUNTY'S WRITTEN APPROVAL OF THE TEMPORARY SEDIMENT BASIN(S) BEFORE PROCEEDING FURTHER IN THE SEQUENCE OF CONSTRUCTION. (PRIORITY INSPECTION)

5. CONSTRUCT SITE IMPROVEMENTS. BEGIN THE PRIMARY SITE CLEARING, EXCAVATION, AND CONSTRUCTION ACTIVITIES AND CONTINUE THE SWP3 AND ESC PLAN IMPLEMENTATION AND MAINTENANCE PER THE APPROVED PLANS.

6. CONSTRUCT DRIVEWAY APPROACH AND RIGHT-OF-WAY IMPROVEMENTS. INSTALL DRIVEWAY APPROACH AND DRAINAGE AND ROAD IMPROVEMENTS IN THE COUNTY RIGHT OF-WAY PER APPROVED PLANS, WHEN APPLICABLE. REQUEST A COUNTY PRE-POUR INSPECTION OF THE DRIVEWAY THROUGH THE MYPERMITNOW.ORG CUSTOMER PORTAL FOR TRAVIS COUNTY GIVING AT LEAST 3 BUSINESS DAYS NOTIFICATION. (PRIORITY INSPECTION).

7. PERFORM TEMPORARY STABILIZATION IN ALL DISTURBED AREAS THAT HAVE CEASED CONSTRUCTION ACTIVITIES FOR 14 DAYS OR LONGER.

8. PERFORM PERMANENT SITE STABILIZATION/RE-VEGETATION IMMEDIATELY IN ALL SITE AREAS AT FINAL PLAN GRADE AND IN ALL SITE AREAS SPECIFIED FOR PHASED REVEGETATION.

9. COMPLETE PERMANENT WATER QUALITY CONTROLS. BEGIN COMPLETION OF PERMANENT WATER QUALITY CONTROL(S) AND INSTALL THE UNDERDRAIN PER APPROVED PLANS, WHEN APPLICABLE.

a. REMOVE CONSTRUCTION SEDIMENT, RE-ESTABLISH THE BASIN SUBGRADE, AND INSTALL UNDERDRAIN PIPING.
b. REQUEST COUNTY INSPECTION AND OBTAIN COUNTY'S WRITTEN APPROVAL OF THE UNDERDRAIN PIPING INSTALLATION AND ASSOCIATED CONSTRUCTION MATERIALS (AGGREGATE, FILTER MEDIA, ETC.) BEFORE COVERING THE UNDERDRAIN AND PROCEEDING WITH CONSTRUCTION OF THE CONTROL. (PRIORITY INSPECTION).

10. COMPLETE CONSTRUCTION SITE IMPROVEMENTS AND FINAL STABILIZATION PER THE APPROVED PLANS.

11. PROVIDE ENGINEER'S CONCURRENCE LETTER THROUGH THE MYPERMITNOW.ORG CUSTOMER PORTAL FOR TRAVIS COUNTY WHEN CONSTRUCTION IS SUBSTANTIALLY COMPLETE AND REQUEST A FINAL INSPECTION BY TRAVIS COUNTY. (PRIORITY INSPECTION)

12. OBTAIN A CERTIFICATE OF COMPLIANCE WHEN ALL FINAL INSPECTION PUNCH LIST ITEMS, INCLUDING FINAL SITE STABILIZATION AND REMOVAL OF TEMPORARY SEDIMENT CONTROLS. IF NECESSARY, PROVIDE A DEVELOPERS CONTRACT TO THE COUNTY TO REQUEST CONDITIONAL ACCEPTANCE FOR USE OR OCCUPANCY OF THE SITE WITH ALL ITEMS COMPLETED EXCEPT RE-VEGETATION GROWTH COVERAGE. REQUEST A RE-INSPECTION WHEN RE-VEGETATION COVERAGE IS COMPLETE. (PRIORITY INSPECTION)

EXHIBIT 482.950
PRE-CONSTRUCTION CONFERENCE PLANNING AND AGENDA FOR SWP3 AND ESC PLAN BEFORE STARTING CONSTRUCTION, THE OWNER OR THEIR REPRESENTATIVE MUST SUBMIT A REQUEST, USING THE MYPERMITNOW.ORG CUSTOMER PORTAL FOR TRAVIS COUNTY, TO PARTICIPATE IN A PRECONSTRUCTION CONFERENCE WITH THE DESIGNATED COUNTY INSPECTOR. PRIOR TO THE PRECONSTRUCTION CONFERENCE REQUEST, THE OWNER OR OWNER'S REPRESENTATIVE SHALL ENSURE THE FIRST PHASE OF THE ESC CONTROLS ARE INSTALLED IN CONFORMANCE WITH THE APPROVED PLANS.
THE OWNER'S QUALIFIED INSPECTOR HAS INSPECTED THE CONTROLS AND VERIFIED COMPLIANCE WITH THE PLANS, AND AN SWP3 INSPECTION REPORT DOCUMENTING THIS INFORMATION HAS BEEN SENT TO THE COUNTY THROUGH THE METHOD SPECIFIED BY THE DESIGNATED COUNTY INSPECTOR. AFTER ARRANGING AN AGREED UPON DATE WITH THE COUNTY AND PROVIDING THE INITIAL SWP3 INSPECTION REPORT, THE OWNER OR OWNER'S DESIGNATED REPRESENTATIVE SHALL PROVIDE NOTICE OF THE SWP3 PRE-CONSTRUCTION CONFERENCE AND A COPY OF THE APPROVED PLANS, IF REQUESTED, TO THE FOLLOWING PERSONS OR ENTITIES AT LEAST TWO BUSINESS DAYS BEFORE THE CONFERENCE:

1. DESIGNATED COUNTY INSPECTOR(S)
2. DESIGN ENGINEER FOR THE APPROVED PLANS AND SWP3, OR THEIR REPRESENTATIVE
3. CONTRACTOR(S)/PRIMARY OPERATOR(S)
4. PRIMARY OPERATOR'S QUALIFIED INSPECTOR RESPONSIBLE FOR PREPARING THE SWP3 INSPECTION REPORTS
5. OTHER STAKEHOLDERS, AS APPROPRIATE: MUNICIPALITIES, UTILITIES, ETC. THE SWP3 PRE-CONSTRUCTION CONFERENCE MAY BE A STANDALONE MEETING OR A PART OF A LARGER PRE-CONSTRUCTION CONFERENCE, BUT MUST INCLUDE AN ON-SITE INSPECTION APPROVAL OF THE FIRST PHASE OF THE PROJECT'S ESC PLAN BY THE COUNTY INSPECTOR BEFORE CONSTRUCTION THE COUNTY INSPECTOR WILL DISCUSS THE FOLLOWING APPLICABLE ITEMS IN THE APPROVED PLANS AND THE SWP3 WITH THE PARTICIPANTS:

1. THE SWP3 SITE NOTEBOOK FOR THE PROJECT, INCLUDING REVIEW OF COMPLETENESS, SIGNATURES, CONSISTENCY WITH THE APPROVED CONSTRUCTION AND ESC PLANS, AND THE REQUIREMENTS FOR MAINTAINING THE SWP3 SITE NOTEBOOK DURING THE CONSTRUCTION PROCESS.
2. THE SEQUENCE OF CONSTRUCTION AND ESC PLAN IMPLEMENTATION; SEDIMENT BASIN CONSTRUCTION SCOPE PRIOR TO FULL SITE GRADING; NON-STRUCTURAL EROSION SOURCE CONTROLS; START DATES AND SCHEDULE OF EVENTS.
3. SEDIMENT CONTROLS; PHASING OF PERIMETER AND INTERIOR SEDIMENT CONTROLS DURING CONSTRUCTION; STRUCTURAL EROSION SOURCE CONTROLS SUCH AS DRAINAGE DIVERSION; ESC MAINTENANCE REQUIREMENTS.
4. ADEQUACY OF THE FIRST ESC PHASE AND FUTURE ESC PHASES TO ADDRESS SPECIFIC SITE CONDITIONS, AND ADJUSTMENT AND REVISION OF THE ESC PLAN AND SWP3 CONTROLS DURING CONSTRUCTION.
5. TEMPORARY AND PERMANENT STABILIZATION AND RE-VEGETATION REQUIREMENTS, INCLUDING SCHEDULE, CRITICAL SITE IMPROVEMENTS AND PRIORITY RE-VEGETATION AREAS.
6. ON AND OFF-SITE TEMPORARY AND PERMANENT SPOIL AND FILL DISPOSAL AREAS, HAUL ROADS, STAGING AREAS, AND STABILIZED CONSTRUCTION ENTRANCES;
7. PERMANENT WATER QUALITY CONTROLS CONSTRUCTION AND COUNTY INSPECTIONS, AND RELATED GRADING AND DRAINAGE CONSTRUCTION.
8. SUPERVISION OF THE SWP3 IMPLEMENTATION BY THE PRIMARY OPERATOR'S DESIGNATED PROJECT MANAGER, INCLUDING ROLES, RESPONSIBILITIES, AND COORDINATION WHEN MORE THAN ONE OPERATOR IS RESPONSIBLE FOR IMPLEMENTATION.
9. INSPECTION AND PREPARATION OF THE WEEKLY SWP3 INSPECTION REPORTS BY THE PRIMARY OPERATOR'S QUALIFIED INSPECTOR; REPORT SUBMITTAL BY THE PRIMARY OPERATOR, AND SWP3 MONITORING INSPECTIONS CONDUCTED BY THE COUNTY INSPECTOR.
10. OBSERVATION AND DOCUMENTATION OF EXISTING SITE CONDITIONS ADJACENT TO THE LIMITS OF CONSTRUCTION BEFORE CONSTRUCTION, INCLUDING WATERWAYS AND POTENTIAL OUTFALL DISCHARGE ROUTES, RIGHTS-OF-WAY AND EASEMENTS, BUFFER ZONES, AND CRITICAL ENVIRONMENTAL FEATURES.
11. SPECIAL SITE CONDITIONS AND PLAN PROVISIONS, SUCH AS PROTECTION OF WATERWAYS, CRITICAL ENVIRONMENTAL FEATURES, TREES TO BE SAVED, AND FUTURE HOMEBUILDING ON SUBDIVISION LOTS.
12. RAIN GAGE LOCATION OR RAINFALL INFORMATION SOURCE TO BE USED DURING CONSTRUCTION AND REPORTING.
13. FINAL INSPECTION AND ACCEPTANCE REQUIREMENTS, INCLUDING THE ENGINEER'S CONCURRENCE LETTER, COMPLETION OF REVEGETATION COVERAGE BEFORE THE NOTICE OF TERMINATION IS SUBMITTED BY THE PRIMARY OPERATOR, STABILIZATION OF RESIDENTIAL SUBDIVISION LOTS, REMOVAL OF TEMPORARY SEDIMENT CONTROLS, THE CERTIFICATE OF COMPLIANCE AND RELEASE OF ESC FISCAL SURETY.
14. EXCHANGE OF TELEPHONE NUMBERS AND CONTACT INFORMATION FOR THE PRIMARY PARTICIPANTS.

THE DESIGN ENGINEER SHALL PREPARE AND DISTRIBUTE NOTES, KEY DECISIONS, AND FOLLOW UP FROM THE PRECONSTRUCTION CONFERENCE TO ALL PARTICIPANTS WITHIN THREE BUSINESS DAYS AFTER COMPLETION OF THE CONFERENCE.

EXHIBIT 482.951 SWP3 INSPECTION AREAS AND REPORT CONTENTS

THE OWNER OR PRIMARY OPERATOR OF THE CONSTRUCTION SITE SHALL DESIGNATE A QUALIFIED INSPECTOR POSSESSING THE REQUIRED CERTIFICATION (AS SPECIFIED IN SECTION 482.934(C)(3)) TO PERFORM A WEEKLY SWP3 INSPECTION AND PREPARE A SIGNED SWP3 INSPECTION REPORT OF THE INSPECTION FINDINGS.
THE CONSTRUCTION SITE AREAS AND THE CONTROL MEASURES LISTED HEREIN ARE TO BE USED AS A MINIMUM AS THE UNIFORM CRITERIA BY THE OWNER'S QUALIFIED INSPECTOR, AS WELL AS THE COUNTY INSPECTOR, TO EVALUATE AND DETERMINE A PROJECT'S COMPLIANCE STATUS WITH THE APPROVED SWP3 AND ESC PLAN.
IN ADDITION, ON AN ONGOING BASIS AND FOLLOWING STORM EVENTS, THE PRIMARY OPERATOR'S RESPONSIBLE ON-SITE PERSONNEL SHALL ALSO INSPECT AND ADDRESS THESE ITEMS DURING CONSTRUCTION AS REQUIRED BY THE SWP3, ESC PLAN, AND TRAVIS COUNTY CODE, SECTION 482.951. AREAS OF INSPECTION, AT THE VERY LEAST, THE FOLLOWING AREAS MUST BE INSPECTED:

1. DISTURBED AREAS AND THE APPROVED LIMITS OF CONSTRUCTION.
2. PERIMETER AND INTERIOR SEDIMENT CONTROLS.
3. AREAS UNDERGOING TEMPORARY STABILIZATION OR PERMANENT VEGETATION ESTABLISHMENT.
4. TEMPORARY AND PERMANENT FILL AND SPOIL STORAGE OR DISPOSAL AREAS.
5. STORAGE AREAS FOR MATERIALS AND EQUIPMENT THAT ARE EXPOSED TO RAINFALL.
6. OUTFALL LOCATIONS AND THE AREAS IMMEDIATELY DOWNSTREAM.
7. STRUCTURAL CONTROLS, INCLUDING SEDIMENT PONDS, SEDIMENT TRAPS, AND DRAINAGE DIVERSIONS.
8. HAUL ROADS AND LOCATIONS WHERE VEHICLES ENTER OR EXIT THE SITE, AND ADJACENT ROADWAYS FOR EVIDENCE OF OFF-SITE SEDIMENT TRACKING.
9. WATERWAY CROSSINGS AND AREAS ADJACENT TO WATERWAYS AND CRITICAL ENVIRONMENTAL FEATURES.
10. CONCRETE WASH OUT AREAS AND ALL AREAS REQUIRING CONTROL MEASURES FOR NONSTORM WATER DISCHARGES, INCLUDING DUST, SOLID WASTE, DE-WATERING, MATERIAL SPILLS, VEHICLE MAINTENANCE AND WASHING, AND WASH WATER DISCHARGES.
11. LOCATIONS OF ALL CONTROL MEASURES THAT REQUIRE MAINTENANCE, INCLUDING ANY CONTROL MEASURE IDENTIFIED IN THE PREVIOUS SWP3 INSPECTION REPORT WHICH REQUIRED MAINTENANCE OR REVISION BY THE OWNER OR PRIMARY OPERATOR.
12. LOCATIONS OF ANY DISCHARGE OF SEDIMENT OR OTHER POLLUTANTS FROM THE SITE AND ANY DISTURBANCE BEYOND THE APPROVED LIMITS OF CONSTRUCTION.
13. LOCATIONS OF CONTROL MEASURES THAT FAILED TO OPERATE AS DESIGNED OR PROVED INADEQUATE FOR A PARTICULAR LOCATION.
14. LOCATIONS WHERE AN ADDITIONAL ESC OR CONTROL MEASURE IS NEEDED.

THE SWP3 INSPECTION REPORT MUST INCLUDE:

A. FINDINGS AS TO WHETHER THE FOLLOWING STRUCTURAL AND NON-STRUCTURAL CONTROLS REQUIRED FOR THE SITE AREAS LISTED ABOVE ARE FUNCTIONING :IN COMPLIANCE WITH THE APPROVED SWP3 AND ESC PLAN:
1. EROSION SOURCE CONTROLS, INCLUDING THE APPROVED SEQUENCE OF CONSTRUCTION AND GRADING PLAN LIMITS, DRAINAGE DIVERSION MEASURES, TEMPORARY AND PERMANENT FILL DISPOSAL AND STOCKPILE MANAGEMENT MEASURES.
2. SEDIMENT CONTROLS, INCLUDING PERIMETER AND INTERIOR CONTROLS, SEDIMENT TRAPS AND BASINS, AND THE SEQUENCE OF CONSTRUCTION REQUIREMENTS FOR THE SEDIMENT CONTROLS.
3. PERMANENT EROSION AND SOIL STABILIZATION CONTROLS, BASED ON THE SEQUENCE OF CONSTRUCTION AND CRITICAL SITE IMPROVEMENTS, AND THE CESSATION OF CONSTRUCTION ACTIVITIES, INCLUDING TEMPORARY STABILIZATION MEASURES FOR AREAS INACTIVE FOR LONGER THAN 14 DAYS, AND PERMANENT STABILIZATION MEASURES FOR AREAS AT FINAL GRADE.
4. OTHER APPLICABLE CONTROLS AND POLLUTION PREVENTION MEASURES.

B. RAINFALL DOCUMENTATION:
1. FOR PROJECTS THAT COMPRISE TEN ACRES OR MORE, THE DOCUMENTATION MUST INCLUDE RAINFALL DATES AND AMOUNTS IN ACCORDANCE WITH SECTION 482.934(E); AND
2. FOR PROJECTS THAT COMPRISE LESS THAN TEN ACRES, THE DOCUMENTATION MUST INCLUDE ACCURATE RAINFALL DATA FROM A LOCATION CLOSEST TO THE SITE.

C. CORRECTIVE ACTIONS REQUIRED FOR ANY NON-COMPLIANT ITEMS AND THE SCHEDULE FOR BRINGING THESE ITEMS INTO COMPLIANCE.
THE SWP3 INSPECTION REPORT CONTENTS MUST CONTAIN THE INSPECTION FINDINGS FOR THE REQUIRED AREAS AND CONTROL MEASURES LISTED HEREIN AND CERTIFY WHETHER THE SITE IS IN COMPLIANCE WITH THE APPROVED SWP3 AND ESC PLAN.
EITHER AT THE TIME OF EACH SWP3 INSPECTION, OR NO LATER THAN THE DATE OF THE INSPECTION, THE OWNER'S QUALIFIED INSPECTOR SHALL PREPARE AND SIGN A SWP3 INSPECTION REPORT. THE OWNER OR PRIMARY OPERATOR SHALL UPLOAD EACH REQUIRED SWP3 OR ESC PLAN INSPECTION REPORT TO THE MYPERMITNOW.ORG CUSTOMER PORTAL FOR TRAVIS COUNTY. AN ALTERNATE METHOD OF REPORT SUBMITTAL MAY BE USED IF APPROVED BY THE COUNTY INSPECTOR.

GENERAL NOTES:

1. POSTINGS AND PERMITS MUST BE PLACED IN A HIGHLY VISIBLE LOCATION ONSITE.
2. ALL EROSION AND SEDIMENTATION CONTROLS (ESC) MUST BE INSTALLED PRIOR TO ANY DISTURBANCE ON SITE AND PLACED DOWN GRADIENT FROM ALL DISTURBANCES.
3. INSTALL SILT FENCE ACCORDINGLY FOR RAIN-ON DIVERSION OR OFFSITE SEDIMENT CONTROL DEPENDING ON UP OR DOWN SLOPE, FACING POST SIDE ON THE DOWN GRADIENT SIDE.
4. ALL ESC USED ONSITE MST BE REGULARLY MONITORED AND MAINTAINED AS NEEDED.
5. MUD AND OR DIRT TRACKED INTO THE ROADWAY MUST BE IMMEDIATELY REMOVED UPON DISCOVERY.
6. EXCESS MATERIALS THAT WILL BE TRANSPORTED TO AN OFFSITE LOCATION MUST HAVE THAT LOCATION CLEARED BY COUNTY INSPECTOR.
7. LOOSE TRASH AND DEBRIS MUST BE DISPOSED OF PROPERLY ONSITE.
8. CONTRACTOR SHALL MAINTAIN AND UTILIZE DUST CONTROL FOR THE DURATION OF THE PROJECT.
9. INITIATE TEMPORARY STABILIZATION WHEN CONSTRUCTION CEASES IN A DISTURBED AREA FOR 14 DAYS.
10. INITIATE PERMANENT STABILIZATION IMMEDIATELY ONCE WORK HAS CEASED AND FINAL GRADE HAS BEEN ACHIEVED.
11. COUNTY INSPECTOR MAY REQUEST ADDITIONAL CONTROLS BE INSTALLED ONSITE AS NEEDED.
12. IT SHALL E PERMITTEE'S RESPONSIBILITY TO INSPECT ALL INLET PROTECTION DEVICES AS PART OF THE WEEKLY REQUIRED SWP3 REPORT, UPON RECEIVING A FORCAST CALLING FOR RAIN, DAILY DURING EXTENDED RAIN EVENTS, AFTER RAIN EVENTS AND SHALL BE RESPONSIBLE FOR THE REMOVAL AND/OR MODIFICATION OF INLET PROTECTION DEVICES SHOULD FLOODING OR THE PONDING OF WATER BECOME A CONCERN TO EITHER TRAFFIC OR PROPERTY.

TRAVIS COUNTY EMERGENCY SERVICES DISTRICT NO. 6

FIRE DEPARTMENT - SITE PLAN NOTES

1. DES

MUD GENERAL NOTES:

LAZY NINE MUD WATER, WASTEWATER & STORM SEWER GENERAL CONSTRUCTION NOTES

1. THE CITY OF AUSTIN STANDARD SPECIFICATIONS CURRENT AT THE TIME OF BIDDING SHALL GOVERN MATERIALS AND METHODS USED TO PERFORM THIS WORK, EXCEPT WHERE THOSE STANDARD SPECIFICATIONS CONTRADICT INFORMATION AND REQUIREMENTS STATED IN TCEQ WATER DISTRIBUTION SYSTEM GENERAL CONSTRUCTION NOTES.
2.
3. ALL CONSTRUCTION OPERATIONS SHALL BE ACCOMPLISHED IN ACCORDANCE WITH APPLICABLE STATE STATUTES AND U.S. OCCUPATIONAL SAFETY AND HEALTH ADMINISTRATION REGULATIONS (O.S.H.A). COPIES OF O.S.H.A. STANDARDS MAY BE PURCHASED FROM THE U.S. GOVERNMENT PRINTING OFFICE. INFORMATION AND OTHER RELATED REFERENCE MATERIALS MAY BE OBTAINED FROM O.S.H.A. AT 611 6TH ST., RM. 303, AUSTIN, TX.

4. THE ATTENTION OF ALL PROSPECTIVE BIDDERS IS DIRECTED TO SECTION 00140; PARAGRAPHS 2.08, 3.09, AND 3.14, OF THE GENERAL CONDITIONS OF THE AGREEMENT, CITY OF AUSTIN STANDARD SPECIFICATIONS, AND TO THE STATE LAW, (VERNON'S ANNOTATED TEXAS STATUTES, ARTICLE 1436 (C)) AND THE NEED FOR EFFECTIVE PRECAUTIONARY MEASURES WHEN OPERATING IN THE VICINITY OF ELECTRICAL LINES. IF THE CONTRACTOR CHOOSES TO USE EQUIPMENT WITH THE POTENTIAL OF COMING WITHIN THE DISTANCES PROSCRIBED BY STATUTE, THE CONTRACTOR IS RESPONSIBLE FOR COORDINATION OF THE WORK WITH THE APPROPRIATE ELECTRIC UTILITY/COMPANY.

5. AT LEAST 48 HOURS BEFORE BEGINNING ANY WATER, WASTEWATER OR STORM SEWER CONSTRUCTION IN THE PUBLIC RIGHT-OF- WAY OR PUBLIC EASEMENT, THE CONTRACTOR MUST NOTIFY: LAZY NINE MUD OPERATOR @ (512) 820-8459, LAZY NINE MUD ENGINEER @ (512) 217-5636 (C) OR (512) 899-0601 (O). LAZY NINE MUD WILL PERFORM UTILITY OBSERVATION OF ALL MUD WATER, WASTEWATER & STORM SEWER LINES. THE CONTRACTOR SHALL GIVE 48 HOURS NOTICE PRIOR TO REQUESTING MUD OBSERVATION OF ANY UTILITY LINE. THE LAZY NINE MUD OPERATOR MUST WITNESS THE CONNECTION TO ANY MUD WATER, WASTEWATER OR STORM SEWER LINE. THE CONTRACTOR SHALL GIVE THE MUD OPERATOR 48 HOURS NOTICE PRIOR TO CONNECTING TO ANY MUD FACILITY.

6. THE CONTRACTOR SHALL CONTACT TESS @ 1-800-344-8377 AND AT&T @ 1-800-852-3786 FOR EXISTING UTILITY LOCATIONS 48 HOURS PRIOR TO ANY EXCAVATION. KNOWN EXISTING UTILITIES ARE SHOWN ON THE DRAWINGS. PRIOR TO THE START OF CONSTRUCTION THE CONTRACTOR SHALL VERIFY THE LOCATIONS OF ALL UTILITIES THAT ARE TO BE EXTENDED, TIED-TO, CROSSED, OR ALTERED; OR SUBJECT TO DAMAGE/INCONVENIENCE BY THE CONSTRUCTION OPERATIONS. THE LOCATION AND TYPE OF UTILITIES AND UNDERGROUND FACILITIES SHOWN ON THESE PLANS ARE NOT GUARANTEED TO BE ACCURATE OR ALL INCLUSIVE. THE CONTRACTOR SHALL VERIFY ALL DEPTHS AND LOCATIONS OF EXISTING UTILITIES PRIOR TO ANY CONSTRUCTION. IT IS THE CONTRACTOR'S RESPONSIBILITY TO LOCATE AND PROTECT ALL EXISTING UTILITIES. IN ADDITION TO NORMAL PRECAUTIONS WHEN EXCAVATING, USE EXTRA CAUTION WHEN EXCAVATING WITHIN 25 FEET OF ANY UTILITIES SHOWN ON THE PLANS.

7. THE CONTRACTOR SHALL BE RESPONSIBLE FOR ALL COORDINATION BETWEEN HIMSELF AND OTHER CONTRACTORS AND UTILITIES IN THE VICINITY OF THE PROJECT DEVELOPMENT PROPERTY. THIS INCLUDES GAS, WATER, WASTEWATER, ELECTRICAL, TELEPHONE, CABLE TELEVISION, AND STREET & DRAINAGE WORK. ONCE THE CONTRACTOR BECOMES AWARE OF A POSSIBLE CONFLICT, IT IS THE CONTRACTOR'S RESPONSIBILITY TO NOTIFY THE ENGINEER WITHIN TWENTY-FOUR (24) HOURS.

8. FIRE HYDRANTS ON MAINS UNDER CONSTRUCTION SHALL BE SECURELY WRAPPED WITH A POLY WRAP BAG TAPED INTO THE POLY WRAP WILL BE REMOVED WHEN THE MAINS ARE ACCEPTED AND PLACED IN SERVICE.

8. FIRE HYDRANTS SHALL BE SET IN ACCORDANCE WITH TRAVIS CO. EMERGENCY SERVICES DISTRICT NO. 6 REQUIREMENTS.

9. WATER VALVES SHALL BE RAISED TO FINISHED GRADE AT THE CONTRACTOR'S EXPENSE. ALL UTILITY ADJUSTMENTS WILL BE COMPLETED BY THE CONTRACTOR AND INSPECTED BY THE MUD ENGINEER OR HIS REPRESENTATIVE.

10. THE ALIGNMENT SHOWN ON THE PLANS SHALL BE ACHIEVED BY DEFLECTION, EXCEPT WHERE SPECIFIC FITTINGS ARE CALLED FOR ON THE PLANS. UNDER NO CONDITIONS SHALL THE CONTRACTOR EXCEED THE MAXIMUM DEFLECTION ANGLE AS RECOMMENDED BY THE PIPE MANUFACTURER.

11. THRUST RESTRAINT SHALL BE IN ACCORDANCE WITH THE CITY OF AUSTIN STANDARD SPECIFICATION ITEM 510.3 (22).

12. WHENEVER EXISTING UTILITIES, INDICATED OR NOT ON PLANS, PRESENT OBSTRUCTIONS TO GRADE OR ALIGNMENT OF PROPOSED PIPE, CONTRACTOR IS TO IMMEDIATELY NOTIFY ENGINEER WHO WILL NOTIFY THE LAZY NINE MUD ENGINEER TO DETERMINE IF EXISTING IMPROVEMENTS ARE TO BE RELOCATED OR IF THE GRADE AND ALIGNMENT OF PROPOSED PIPE IS TO BE CHANGED.

13. ALL MATERIALS TESTING, INCLUDING SOIL DENSITY TESTS AND RELATED SOIL ANALYSIS, SHALL BE DONE BY AN INDEPENDENT LABORATORY FUNDED BY THE OWNER.

14. ANY FITTINGS, VALVES, OR OTHER APPURTENANCES NECESSARY FOR TESTING OF UTILITY LINES SHALL BE PROVIDED BY THE CONTRACTOR AT NO ADDITIONAL COST TO THE OWNER.

15. ALL UTILITY LINE TESTING SHALL BE DONE IN ACCORDANCE WITH CITY OF AUSTIN STANDARDS. WATER LINES SHALL BE FILLED WITH WATER AND ALL AIR EXPELLED AT LEAST 24 HOURS BEFORE TESTING. ALL SERVICE LATERALS AND FIRE HYDRANT LEADS, WITH THE HYDRANT VALVES CLOSED AND NOZZLE CAPS OPEN, SHALL BE INCLUDED IN THE TESTS. THE CONTRACTOR IS RESPONSIBLE FOR PURCHASING ALL WATER TO BE USED FOR TESTING.

16. LAZY NINE MUD WILL OBSERVE TESTING OF ALL MUD WATER, WASTEWATER & STORM SEWER LINES. THE CONTRACTOR SHALL GIVE 48 HOURS NOTICE PRIOR TO REQUESTING MUD OBSERVATION OF ANY UTILITY LINE TESTING.

17. IT SHALL BE THE RESPONSIBILITY OF THE CONTRACTOR TO REPAIR, AT HIS EXPENSE, ALL UTILITIES, PAVEMENT, DRIVEWAYS, CURB, FENCES, AND ANY OTHER ITEMS DAMAGED DURING CONSTRUCTION REGARDLESS OF WHETHER THESE ITEMS ARE SHOWN ON THE PLANS.

18. NO DRIVEWAY OR STREET SHALL BE CLOSED OVERNIGHT. CONTRACTOR SHALL REPAIR ALL STREET CROSSINGS, DRIVEWAYS AND DITCHES TO THEIR ORIGINAL CONDITION OR BETTER. STREET CROSSINGS SHALL BE REPAIRED WITHIN 10 WORKING DAYS AFTER CROSSING IS MADE.

19. DUST PREVENTION IN ACCORDANCE WITH THE TECHNICAL SPECIFICATIONS, OR AS OTHERWISE DIRECTED BY THE OWNER OR HIS REPRESENTATIVE, SHALL BE PROVIDED BY THE CONTRACTOR AT HIS EXPENSE. THIS WILL INCLUDE SPRAYING WATER ON ALL DISTURBED AREAS, SPOIL PILES, OR HAUL MATERIALS ASSOCIATED WITH THE PROJECT. CONTRACTOR MUST SWEEP DIRT AND DEBRIS OFF THE ROADWAY AT THE END OF EACH DAYS CONSTRUCTION ACTIVITY.

20. UPON COMPLETION AND BEFORE MAKING APPLICATION FOR ACCEPTANCE OF THE WORK, THE CONTRACTOR SHALL CLEAN ALL STREETS AND ALL GROUND OCCUPIED BY HIM IN CONNECTION WITH THE WORK OF ALL RUBBISH, EXCESS MATERIALS, EXCESS EXCAVATED MATERIALS, TEMPORARY STRUCTURES AND EQUIPMENT. ALL PARTS OF THE WORK SHALL BE LEFT IN A NEAT AND PRESENTABLE CONDITION SATISFACTORY TO THE OWNER AND GOVERNMENTAL BODIES HAVING JURISDICTION
PRIOR TO SUBMITTAL OF THE FINAL PAYMENT, FINAL CLEANUP PAYMENT IS CONSIDERED AS INCIDENTAL TO UNIT PRICES ON THE BID PROPOSAL.

21. THE CONTRACTOR SHALL BE RESPONSIBLE FOR DISPOSING OF ALL SPOILS MATERIAL FROM THE CONSTRUCTION SITE. ALL SPOILS MATERIAL SHALL BE DISPOSED OF BY THE CONTRACTOR AT AN APPROVED SPOIL SITE. THE CONTRACTOR SHALL BE RESPONSIBLE FOR LOCATING AND SECURING A PERMIT FOR THE SITE; AND SHALL NOTIFY THE PROPER AUTHORITIES AT LEAST FORTY-EIGHT (48) HOURS PRIOR TO DISPOSAL FO THE MATERIAL.

22. NO BLASTING OR BURNING WILL BE ALLOWED.

23. DEWATERING, IF NECESSARY, WILL BE CONSIDERED INCIDENTAL TO THE WORK AND SHALL NOT CONSTITUTE A BASIS FOR ADDITIONAL PAYMENT. DEWATERING SHALL BE PERFORMED IN ACCORDANCE WITH CITY OF AUSTIN STANDARD SPECIFICATION ITEM NO. 510.3(8).

24. ALL CONCRETE SHALL BE CLASS 'A' WITH A MINIMUM 28 DAY COMPRESSIVE STRENGTH OF 3,000 P.S.I. UNLESS OTHERWISE
NOTED.

25. ALL REINFORCING STEEL SHALL BE ASTM A615M, GRADE 60, UNLESS OTHERWISE NOTED.

26. WHILE WORKING IN ROADWAYS, CONTRACTOR SHALL BACKFILL TRENCH AS WORK IS COMPLETED. ROADWAYS SHALL BE
RESTORED TO NORMAL SERVICE BY THE END OF EACH DAY.

PROJECT:

SWEETWATER LOT 3B

LOCATION:

16620 SWEETWATER
VILLAGE DRIVE
BEE CAVE (ETJ)
TEXAS 78669

AES Professional Services LLC

project team

CIVIL ENGINEER:
AES Engineering Consultant
Ahmed El Seweify P.E.
2514 PRESERVE TRAIL, CEDAR PARK, TX 78613
Ph. (512) 785-9034
email: contact@aes-engs.com
Texas Firm F-22721

Owner Representative:
DORADO DEVELOPMENT
CONTACT: David Cummings
p 210.732.5335
e david@doradodev.com

Architect:
VILLA PARK ARCHITECTURE
CONTACT: MARK NEVILLE
p 210.384.8900
e mark@villapark.sa.com

GEOTECHNICAL ENGINEER
ROCK ENGINEERING & TESTING
10856 VANDALE ST. SAN ANTONIO TEXAS 78216
(210) 495-8000
WWW.ROCKTESTING.COM

SURVEY:
DELTA LAND SURVEYING
14900 AVERY RANCH BLVD. STE C200
AUSTIN, TX 78717
512-781-9800

2025-11-12

STATE OF TEXAS
AHMED EL SEWEIFY
141828
LICENSED
PROFESSIONAL ENGINEER

Ahmed El Seweify

Texas 811
Know what's below.
Call before you dig.

REVISION	DATE	ISSUE TITLE

DRAWING TITLE:

MUD GENERAL NOTES

PROJECT NO:	DRAWN & CHECKED BY:
10-1072	AES
DATE:	**SCALE:**
2025-11-12	NTS

SHEET NUMBER:

4 of 31

10/20/2025 10:06:17 PM

G:\My Drive\AES ENGINEERING\10-1072 Sweetwater\cad\03 GENERAL NOTES.dwg

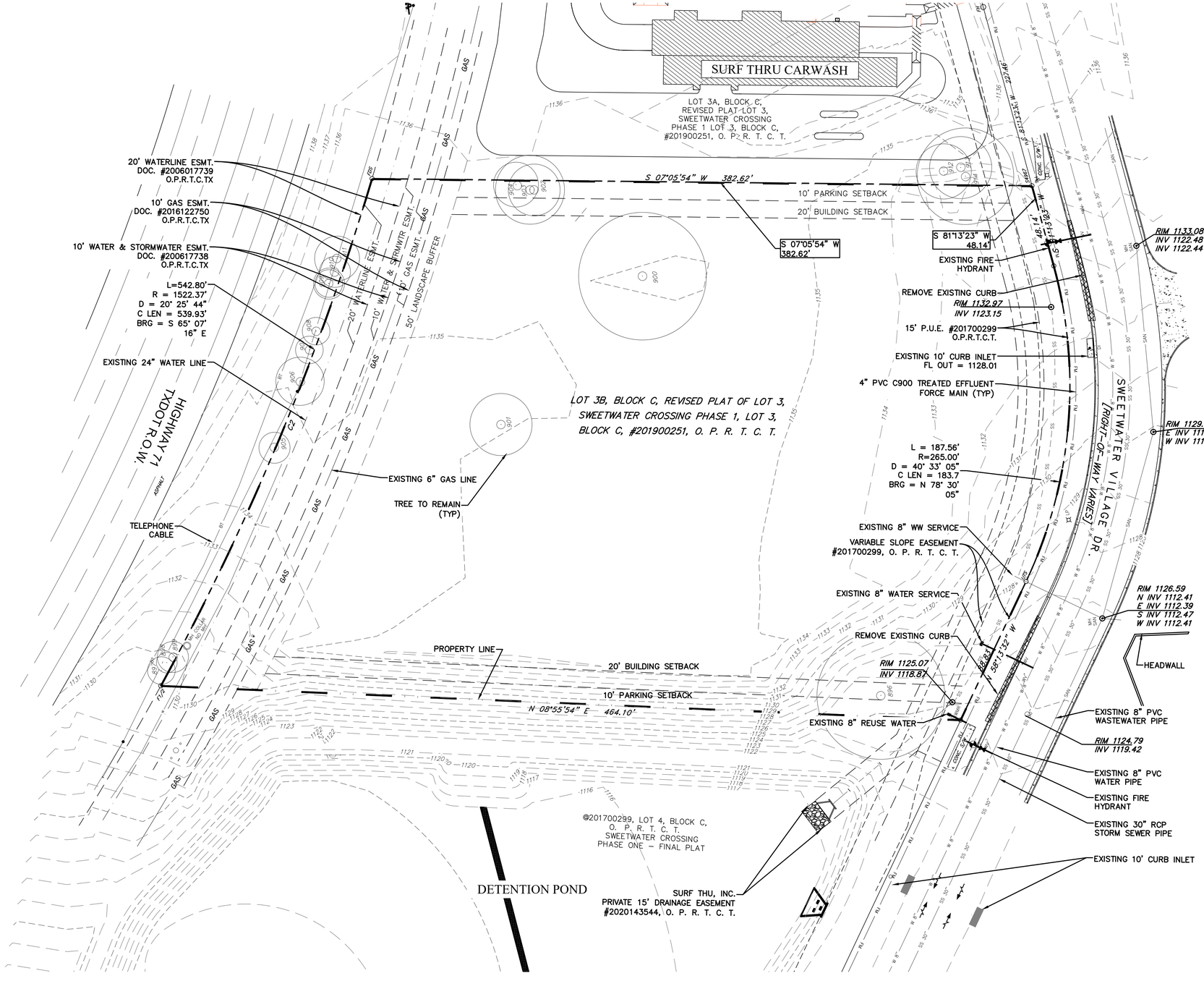

30 0 15 30 60
1" = 30'

LEGEND

- 1/2" IRON ROD FOUND (UNLESS OTHERWISE NOTED)
- LIGHT POLE
- UTILITY POLE
- DOWN GUY
- FIRE HYDRANT
- WATER VALVE
- ELECTRIC BOX
- ELECTRIC METER
- GAS METER
- OE — OVERHEAD ELECTRIC LINE
- EMH ELECTRIC MANHOLE
- WWMH WASTEWATER MANHOLE
- SSMH STORM SEWER MANHOLE
- CO CLEANOUT
- LOC LIMITS OF CONSTRUCTION
- O.P.R.T.C.TX OFFICIAL PUBLIC RECORDS, TRAVIS COUNTY, TEXAS
- R.O.W. RIGHT OF WAY
- P.U.E. PUBLIC UTILITY EASEMENT

TREE DATA

NO.	SPECIES	DIAMETER (INCHES)
896	Live Oak	37
897	Live Oak	8
898	Live Oak	6
899	Live Oak	9
900	Live Oak	37
901	Live Oak	18
902	Live Oak	15
903	Live Oak	20
904	Live Oak	13
905	Eastern Redcedar	9
906	Eastern Redcedar	14
907	Eastern Redcedar	8
908	Eastern Redcedar	8
909	Eastern Redcedar	8
910	Eastern Redcedar	9
911	Eastern Redcedar	13
912	Live Oak	16
913	Live Oak	18
914	Live Oak	28

BEARING BASIS NOTE:
THE BASIS OF BEARING OF THE SURVEY SHOWN HERON IS TEXAS STATE PLANE COORDINATE SYSTEM, CENTRAL ZONE, NAD 83 (96)

BENCHMARK INFORMATION
ELEVATIONS HERON ARE REFERENCED TO SITE BENCHMARKS VERTICAL DATUM (NGVD29)

DEMOLITION NOTES

1. ALL EXISTING CONCRETE AND ASPHALT IMPROVEMENTS TO BE REMOVED FROM SITE AS SHOWN. CONTRACTOR SHALL DISPOSE OF CONCRETE, ASPHALT, AND OTHER CONSTRUCTION DEBRIS AT AN APPROVED OFF-SITE FACILITY.
2. ANY HAZARDOUS OR ENVIRONMENTALLY HARMFUL MATERIALS SHALL BE REMOVED AND DISPOSED BY PROPERLY LICENSED CONTRACTORS AND IN ACCORDANCE WITH LOCAL, STATE AND FEDERAL LAWS.
3. CONTRACTOR IS RESPONSIBLE FOR OBTAINING THE REQUIRED PERMITS FOR DEMOLITION FROM THE PROPER AUTHORITIES.
4. ALL DEMOLITION SHALL BE IN ACCORDANCE WITH LOCAL, STATE AND FEDERAL GUIDELINES.

EXISTING CONDITION NOTE:

1. EXISTING CONDITIONS SHOWN ARE BASED ON AVAILABLE INFORMATION, INCLUDING SURVEY DATA, FINAL PLATS AND RECORD DRAWINGS, CONTRACTOR SHALL VERIFY LOCATION OF ALL IMPROVEMENTS AND GRADES IN THE FIELD. NOTIFY ENGINEER IN THE EVENT OF DISCREPANCY BETWEEN THIS PLAN AND ACTUAL CONDITIONS.
2. UTILITY LOCATIONS SHOWN ARE APPROXIMATE AND BASED ON AVAILABLE RECORD DRAWINGS, CONTRACTOR SHALL VERIFY LOCATIONS PRIOR TO CONSTRUCTION.

PROJECT:
SWEETWATER LOT 3B

LOCATION:
16620 SWEETWATER
VILLAGE DRIVE
BEE CAVE (ETJ)
TEXAS 78669

AES Professional Services LLC

project team

CIVIL ENGINEER:
AES Engineering Consultant
Ahmed El Seweify P.E.
2514 PRESERVE TRAIL, CEDAR PARK, TX 78613
Ph. (512) 785-9034
email: contact@aes-engs.com
Texas Firm F-22721

Owner Representative:
DORADO DEVELOPMENT
CONTACT: David Cummings
p 210.732.5335
e david@doradodev.com

Architect:
VILLA PARK ARCHITECTURE
CONTACT: MARK NEVILLE
p 210.384.8900
e mark@villapark.sa.com

GEOTECHNICAL ENGINEER
ROCK ENGINEERING & TESTING
10856 VANDALE ST. SAN ANTONIO TEXAS 78216
(210) 495-8000
WWW.ROCKTESTING.COM

SURVEY:
DELTA LAND SURVEYING
14900 AVERY RANCH BLVD. STE C200
AUSTIN, TX 78717
512-781-9800

2025-11-12

STATE OF TEXAS
AHMED EL SEWEIFY
141828
LICENSED PROFESSIONAL ENGINEER

Texas 811
Know what's below. Call before you dig.

REVISION	DATE	ISSUE TITLE

DRAWING TITLE:
EXISTING CONDITIONS

PROJECT NO:	DRAWN & CHECKED BY:
10-1072	ABS
DATE: 2025-11-12	SCALE: 1:30

SHEET NUMBER:
5 of 28

6/9/2025 11:49:16 PM

G:\My Drive\AES ENGINEERING\10-1072 Sweetwater\cad\04 EXISTING CONDITIONS (1).dwg

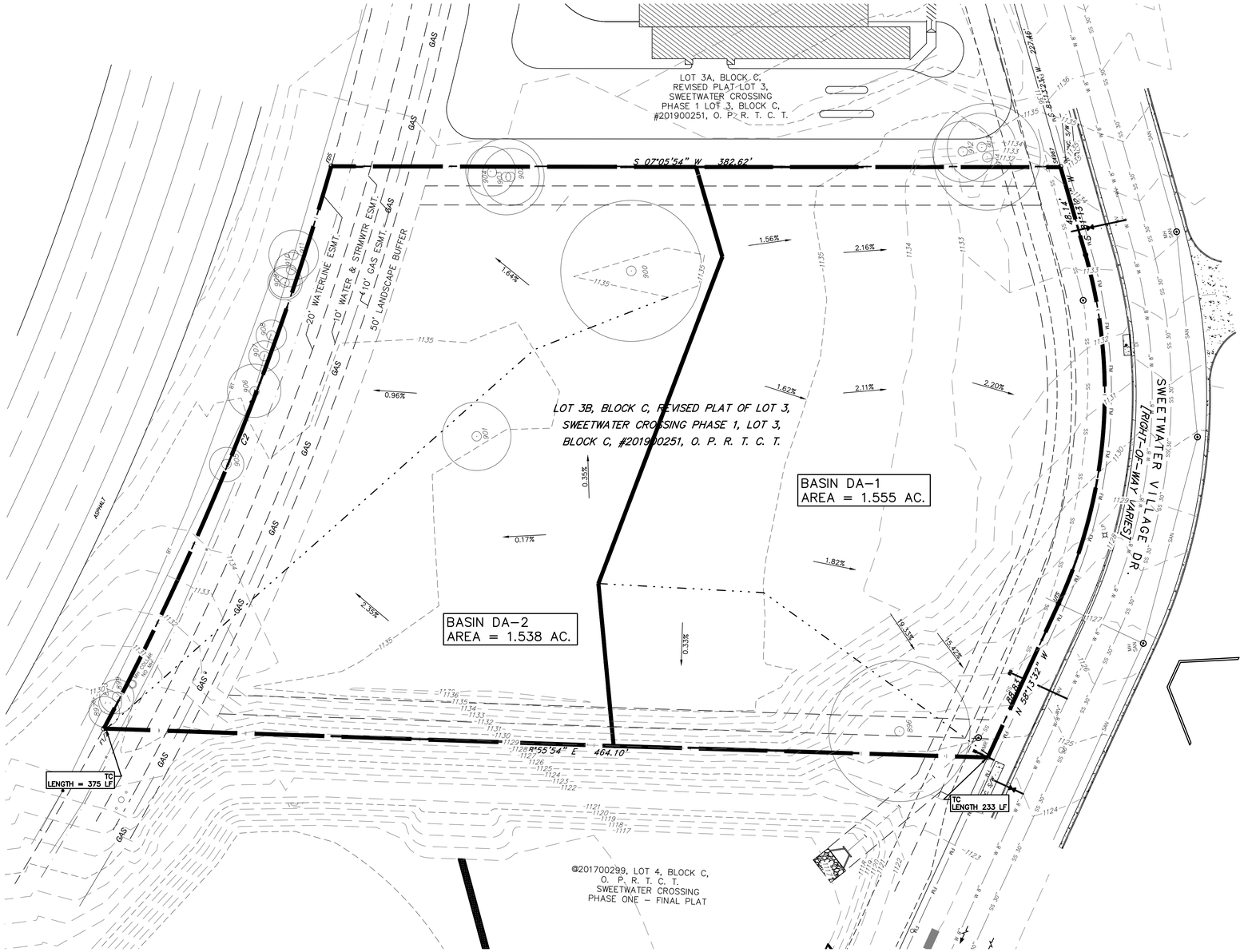

30 0 15 30 60

1" = 30'

LEGEND

- 1/2" IRON ROD FOUND (UNLESS OTHERWISE NOTED)
- LIGHT POLE
- UTILITY POLE
- DOWN GUY
- FIRE HYDRANT
- WATER VALVE
- ELECTRIC BOX
- ELECTRIC METER
- GAS METER
- OE — OVERHEAD ELECTRIC LINE
- EMH ○ ELECTRIC MANHOLE
- WWMH ○ WASTEWATER MANHOLE
- SSMH ○ STORM SEWER MANHOLE
- CO ○ CLEANOUT
- DRAINAGE AREA BOUNDARY
- SUB-BASIN AREA BOUNDARY
- DIRECTION OF STORMWATER FLOW
- DRAINAGE AREA ABREVIATION
- DRAINAGE AREA NUMBER

DA-1 (DRAINAGE AREA I.D.)
X.XX AC (AREA (ACRES))

NOTES

1. DRAINAGE CALCULATION FOR THIS DEVELOPMENT ARE BASED UPON THE CITY OF AUSTIN DRAINAGE DESIGN MANUAL, CALCULATIONS ARE BASED UPON THE ATLAS-14 DEPTH WITH A MINIMUM TIME OF CONCENTRATION OF 5 MINUTES. OVERLAND FLOW AND OTHER HYDRAULIC CALCULATIONS ARE BASED UPON THE MANNING'S EQUATION.
2. SEE DRAINAGE REPORT FOR TIME OF CONCENTRATION CALCULATION AND CN VALUES.

IMPERVIOUS COVER

GRASS	134,731 SF	3.09 AC.	
TOTAL IMPERVIOUS COVER			0 %

DEPTH-DURATION VALUES	
STORM EVENT	DCM DEPTH
2-YEAR SCS TYPE III, 24-HOUR	4.14
10-YEAR SCS TYPE III, 24-HOUR	6.84
25-YEAR SCS TYPE III, 24-HOUR	8.9
100-YEAR SCS TYPE III, 24-HOUR	12.8

HYDROLOGY PEAK FLOW SUMMARY TABLE

PRE-DEVELOPMENT RUNOFF (ATLAS-14)

DA	AREA	TC	CN	Q-2YRS	Q-10YRS	Q-25YRS	Q-100YRS
	ACRE	MINUTE		CFS	CFS	CFS	CFS
DA-1	1.555	15.63	84	3.33	6.53	8.9	13.54
DA-2	1.538	19	84	3.08	6.05	8.32	12.59
TOTAL				6.41	12.58	17.22	26.13

PROJECT:

SWEETWATER LOT 3B

LOCATION:

16620 SWEETWATER
VILLAGE DRIVE
BEE CAVE (ETJ)
TEXAS 78669

AES Professional Services LLC

project team

CIVIL ENGINEER:
AES Engineering Consultant
Ahmed El Seweify P.E.
2514 PRESERVE TRAIL, CEDAR PARK, TX 78613
Ph. (512) 785-9034
email: contact@aes-engs.com
Texas Firm F-22721

Owner Representative:
DORADO DEVELOPMENT
CONTACT: David Cummings
p 210.732.5335
e david@doradodev.com

Architect:
VILLA PARK ARCHITECTURE
CONTACT: MARK NEVILLE
p 210.384.8900
e mark@villapark.sa.com

GEOTECHNICAL ENGINEER
ROCK ENGINEERING & TESTING
10856 VANDALE ST. SAN ANTONIO TEXAS 78216
(210) 495-8000
WWW.ROCKTESTING.COM

SURVEY:
DELTA LAND SURVEYING
14900 AVERY RANCH BLVD. STE C200
AUSTIN, TX 78717
512-781-9800

2025-11-12

STATE OF TEXAS
AHMED EL SEWEIFY
141828
LICENSED PROFESSIONAL ENGINEER

Ahmed El Seweify

Texas 811
Know what's below.
Call before you dig.

REVISION	DATE	ISSUE TITLE

DRAWING TITLE:

EXISTING DRAINAGE
AREA MAP

PROJECT NO:	DRAWN & CHECKED BY:
10-1072	AES
DATE:	SCALE:
2025-11-12	1:30

SHEET NUMBER:

6 of 28

G:\My Drive\AES ENGINEERING\10-1072 Sweetwater\cad\06 EXISTING DRAINAGE AREA MAPS.dwg

6/9/2025 11:49:12 PM

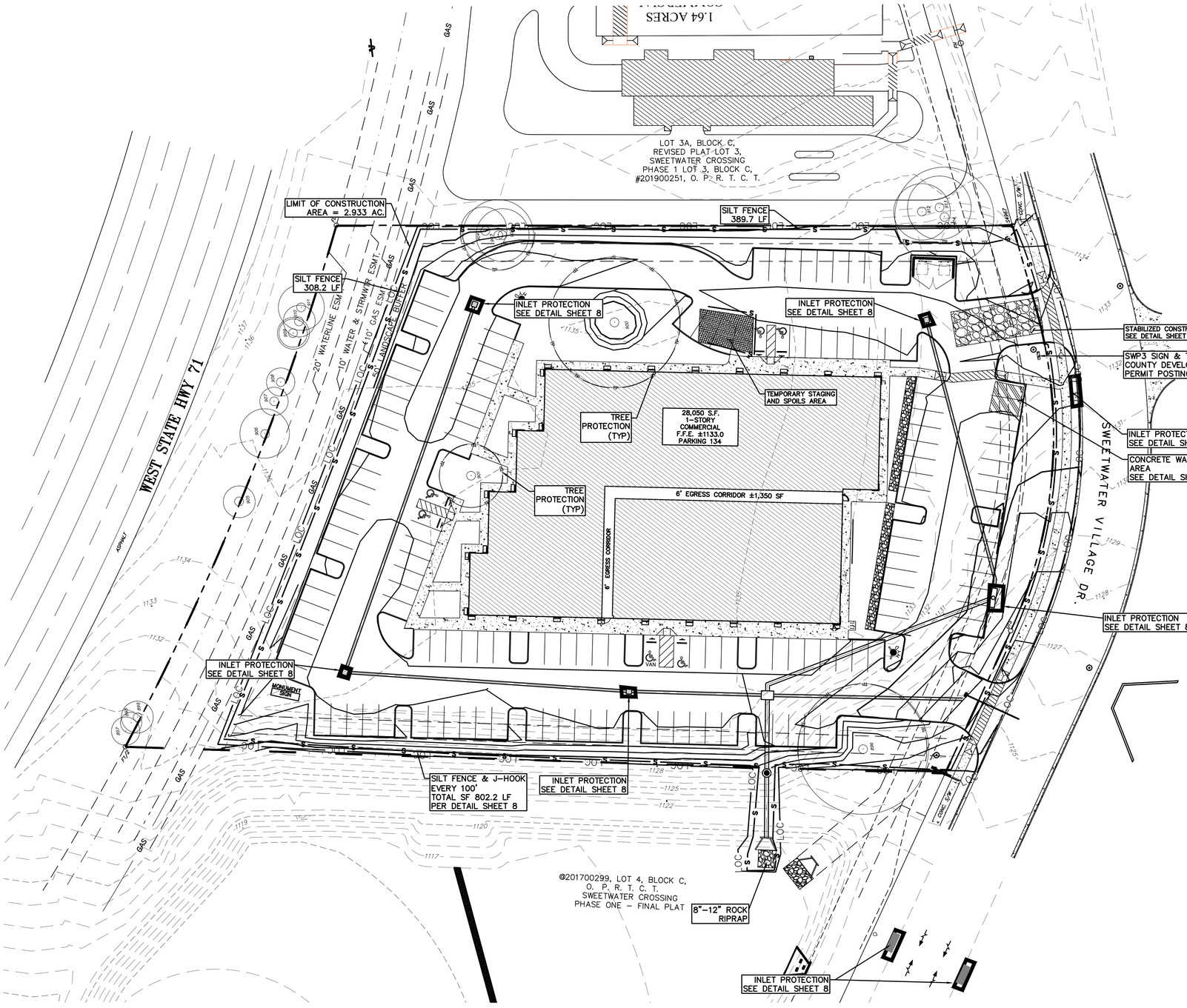

30 0 15 30 60

1" = 30'

LEGEND

EXISTING	PROPOSED	DESCRIPTION
		PROPERTY (R.O.W.) LINE
(###)		RECORD INFORMATION
		LIGHT POLE
	PP	UTILITY POLE
		DOWN GUY
	T	TRANSFORMER (SIZE VARIES)
		GROUND LIGHT
		FIRE HYDRANT
		WATER VALVE
		WATER METER
	WM	WATER METER VAULT
#"TRMH"		WATER MANHOLE
SPC		SPRINKLER CONTROL BOX
		TELEPHONE RISER
		CABLE TV RISER
		ELECTRIC BOX
		ELECTRIC METER
		GAS METER
		GAS VALVE
TCB	TCB	TRAFFIC CONTROL BOX
TSP	TSP	TRAFFIC SIGNAL POST
UGCM		UNDERGROUND CABLE MARKER
UFOM		UNDERGROUND FIBER OPTIC MARKER
UGGM		UNDERGROUND GAS LINE MARKER
UGTM		UNDERGROUND TELEPHONE MARKER
GRISE		GAS RISER
		GRATE INLET
		CURB INLET (SIZE VARIES)
		CHAIN LINK FENCE
		WIRE FENCE
SS		STORMSEWER LINE
W	XX"W	WATER LINE
	XX"FL	FIRE LINE
CW	XX"CW	CHILLED WATER
WW	XX"WW	WASTEWATER LINE
E	E	ELECTRIC LINE
OE	XX"OE	OVERHEAD ELECTRIC
UT	XX"UT	UNDERGROUND TELEPHONE
UC	XX"UC	UNDERGROUND CABLE AND INTERNET
C	C	UNDERGROUND CABLE AND INTERNET
TC	TC	TELECOMMUNICATIONS LINE
EMH	EMH	ELECTRIC MANHOLE (SIZE VARIES)
WWMH		WASTEWATER MANHOLE (SIZE VARIES)
SSMH		STORMSEWER MANHOLE (SIZE VARIES)
TMH	TMH	TELEPHONE MANHOLE (SIZE VARIES)
CO	CO	WASTEWATER CLEANOUT
GT		GREASE TRAP
	D	DUMPSTER
		CURB & GUTTER
		VERTICAL CURB
		EDGE OF PAVEMENT
		IMPERVIOUS WALKWAYS
		CRUSHED GRANITE WALKWAYS
		WALL
WL	WL	WATER LINE
WW	WW	WASTEWATER LINE
FFE	FFE	FINISH FLOOR ELEVATION
678	500	CONTOUR
		DIRECTION OF FLOW
		8"–12" ROCK RIPRAP
TP	TP	TREE PROTECTION
SF	SF	SILT FENCE
LOC	LOC	LIMITS OF CONSTRUCTION
LOC & SF	LOC & SF	LIMITS OF CONSTRUCTION & SILT FENCE
		ROCK BERM
		INLET PROTECTION
		STABILIZED CONSTRUCTION ENTRANCE
		ROCK RIPRAP
		ROCK BERM
		TREE TO BE SAVED
		TREE TO BE REMOVED

NOTES

1. A PRE-CONSTRUCTION MEETING WITH THE ENVIRONMENTAL INSPECTOR IS REQUIRED PRIOR TO ANY SITE DISTURBANCE.
2. IF DISTURBED AREA IS NOT TO BE WORKED ON FOR MORE THAN 14 DAYS, DISTURBED AREA NEEDS TO BE STABILIZED BY RE-VEGETATION MULCH, TARP OR RE-VEGETATION MATING.
3. CONTRACTOR SHALL UTILIZE DUST CONTROL MEASURES DURING SITE CONSTRUCTION SUCH AS IRRIGATION TRUCKS AND MULCHING AS DIRECTED BY THE ENVIRONMENTAL INSPECTOR.
4. CONTRACTOR SHALL CLEAN UP SPOILS THAT MIGRATE ONTO THE ROADS A MINIMUM OF ONCE DAILY.
5. IF A CONCRETE WASHOUT IS TO BE UTILIZED DURING CONSTRUCTION ADD A NOTE ON THE PLAN SHEETS THAT STATES THAT THE LOCATION WILL BE DETERMINED ONCE CONSTRUCTION HAS BEGUN AND WILL BE PROPERLY NOTATED ON THE SITE MAP AT THAT TIME.
6. ALL REQUIRED NOTICES AND PERMITS MUST BE PLACED IN A HIGHLY VISIBLE LOCATION ONSITE BEFORE THE COMMENCEMENT OF CONSTRUCTION.
7. ALL EROSION AND SEDIMENTATION CONTROLS (ESC) MUST BE INSTALLED PRIOR TO ANY DISTURBANCE TO THE PROJECT SITE.
8. INSTALL SILT FENCE ACCORDINGLY FOR RUN-ON DIVERSION OR OFFSITE SEDIMENT CONTROL DEPENDING ON UP OR DOWN SLOPE, FACING POST SIDE ON THE DOWN GRADIENT SIDE.
9. ALL ESC USED ONSITE MUST BE REGULARLY MONITORED AND MAINTAINED AS NEEDED.
10. MUD AND OR DIRT TRACKED INTO THE ROADWAY MUST BE IMMEDIATELY REMOVED UPON DISCOVERY.
11. EXCESS MATERIALS THAT WILL BE TRANSPORTED TO AN OFFSITE LOCATION MUST HAVE THAT LOCATION CLEARED BY COUNTY INSPECTOR.
12. LOOSE TRASH AND DEBRIS MUST BE DISPOSED OF PROPERLY ONSITE.
13. CONTRACTOR SHALL MAINTAIN AND UTILIZE DUST CONTROL FOR THE DURATION OF THE PROJECT.
14. HE STABILIZED CONSTRUCTION ENTRANCE SHALL BE MAINTAINED IN A CONDITION THAT PREVENTS TRACKING ONTO THE PUBLIC ROADWAY ON AN ONGOING/REGULAR BASIS.
15. INLET PROTECTION SHALL BE INSTALLED IMMEDIATELY UPON INLET INSTALLATION.
16. INITIATE TEMPORARY STABILIZATION WHEN CONSTRUCTION CEASES IN A DISTURBED AREA FOR 14 DAYS.
17. INITIATE PERMANENT STABILIZATION IMMEDIATELY ONCE WORK HAS CEASED AND FINAL GRADE HAS BEEN ACHIEVED.
18. ALL DISTURBED/BARE AREAS WILL REQUIRE PERMANENT STABILIZATION BEFORE FINAL ACCEPTANCE CAN BE ACHIEVED. AVOID DISTURBING AREAS OF THE PROJECT THAT ARE NOT NECESSARY FOR CONSTRUCTION.
19. COUNTY INSPECTOR MAY REQUEST ADDITIONAL CONTROLS BE INSTALLED ONSITE AS NEEDED.
20. TEMPORARY ESC'S SHALL REMAIN IN PLACE IN ALL DISTURBED AREAS UNTIL ADEQUATE STABILIZATION HAS BEEN ACHIEVED.
21. CONTRACTOR MUST REMOVE SEDIMENT FROM ALL STORM SEWER INLET BOXES, LINES, PIPES AND CULVERTS BEFORE CONDITIONAL/FINAL ACCEPTANCE CAN OBTAINED.
22. TRAVIS COUNTY REQUIRES CERTIFIED SWP3 INSPECTORS TO CONDUCT SWP3 INSPECTIONS AND REPORTING ON ALL PROJECTS WITH ONE ACRE OF DISTURBANCE AND LARGER.
23. PERMITTEE SHALL INSPECT ALL INLET PROTECTION DEVICES AS PART OF THE WEEKLY SWP3 REPORT, UPON RECEIVING A FORECAST CALLING FOR A RAIN EVENT FOR AN EXTENDED PERIOD, MODIFICATION OF INLET PROTECTION SHOULD BE MADE TO PREVENT FLOODING OR PONDING OF WATER IF TRAFFIC OR PROPERTY CONCERNS ARISE.
24. A DE-WATERING PLAN FOR THE POND(S) MUST BE APPROVED BY THE COUNTY ENVIRONMENTAL INSPECTOR IF THE TEMPORARY SEDIMENTATION POND IS DE-WATERED AFTER RAINFALL EVENTS. THE DE-WATERING METHOD MUST MINIMIZE THE DISCHARGE OF SUSPENDED SEDIMENTS TO THE GREATEST EXTENT FEASIBLE BY DRAWING WATER FROM THE SURFACE OF THE IMPOUNDMENT.
25. RESTORATION OF THE STORM DRAIN OUTLET WITHIN THE POND BASIN AND EMBANKMENT MUST BE INITIATED IMMEDIATELY UPON COMPLETION TO AVOID IMPACTING POND PERFORMANCE.
26. CURB INLET PROTECTION MUST BE INSTALLED AFTER STORM DRAIN INLETS ARE INSTALLED UNTIL THE SITE IS STABILIZED BY PAVING AND LANDSCAPING.

PROJECT:

SWEETWATER LOT 3B

LOCATION:

16620 SWEETWATER
VILLAGE DRIVE
BEE CAVE (ETJ)
TEXAS 78669

AES Professional Services LLC

project team

CIVIL ENGINEER:
AES Engineering Consultant
Ahmed El Seweify P.E.
2514 PRESERVE TRAIL, CEDAR PARK, TX 78613
Ph. (512) 785-9034
email: contact@aes-engs.com
Texas Firm F-22721

Owner Representative:
DORADO DEVELOPMENT
CONTACT: David Cummings
p 210.732.5335
e david@doradodev.com

Architect:
VILLA PARK ARCHITECTURE
CONTACT: MARK NEVILLE
p 210.384.8900
e mark@villapark.sa.com

GEOTECHNICAL ENGINEER
ROCK ENGINEERING & TESTING
10856 VANDALE ST. SAN ANTONIO TEXAS 78216
(210) 495-8000
WWW.ROCKTESTING.COM

SURVEY:
DELTA LAND SURVEYING
14900 AVERY RANCH BLVD. STE C200
AUSTIN, TX 78717
512-781-9800

2025-11-12

STATE OF TEXAS
AHMED EL SEWEIFY
141828
LICENSED
PROFESSIONAL ENGINEER

Ahmed El Seweify

Texas 811
Know what's below.
Call before you dig.

REVISION	DATE	ISSUE TITLE

DRAWING TITLE:

EROSION &
SEDIMENTATION CONTROL

PROJECT NO:	DRAWN & CHECKED BY:
10-1072	AES
DATE:	SCALE:
2025-11-12	1:30

SHEET NUMBER:

7 of 31

10/15/2025 3:34:29 AM

G:\My Drive\AES ENGINEERING\10-1072 Sweetwater\cad\05 EROSION AND SEDIMENTATION.dwg

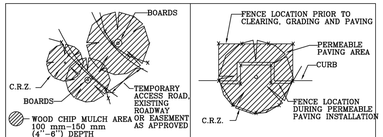

CITY OF AUSTIN WATERSHED PROTECTION DEPARTMENT	TREE PROTECTION FENCE LOCATIONS
RECORD COPY SIGNED BY J. PATRICK MURPHY 11/15/99 ADOPTED	THE ARCHITECT/ENGINEER ASSUMES RESPONSIBILITY FOR APPROPRIATE USE OF THIS STANDARD. STANDARD NO. 610S-1

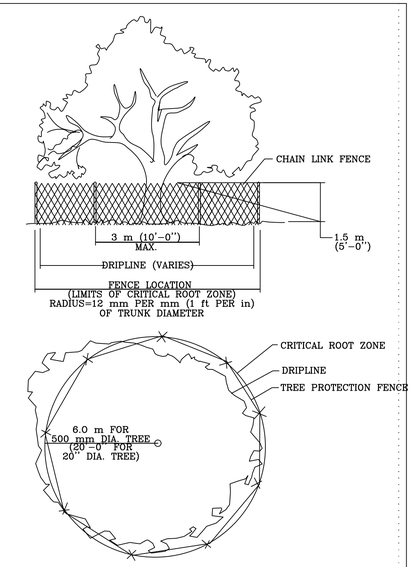

CITY OF AUSTIN WATERSHED PROTECTION DEPARTMENT	TREE PROPTECTION FENCE TYPE A – CHAIN LINK
RECORD COPY SIGNED BY J. PATRICK MURPHY 11/15/99 ADOPTED	THE ARCHITECT/ENGINEER ASSUMES RESPONSIBILITY FOR APPROPRIATE USE OF THIS STANDARD. STANDARD NO. 610S-2

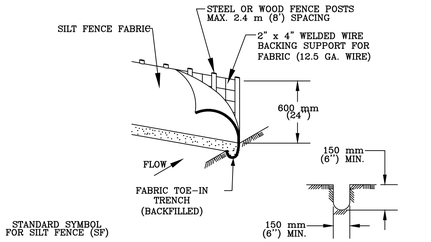

1. STEEL OR WOOD POSTS WHICH SUPPORT THE SILT FENCE SHALL BE INSTALLED ON A SLIGHT ANGLE TOWARD THE ANTICIPATED RUNOFF SOURCE. POST MUST BE EMBEDDED A MINIMUM OF 300 mm (12 INCHES). IF WOOD POSTS CANNOT ACHIEVE 300 mm (12 inches) DEPTH, USE STEEL POSTS.

2. THE TOE OF THE SILT FENCE SHALL BE TRENCHED IN WITH A SPADE OR MECHANICAL TRENCHER, SO THAT THE DOWNSLOPE FACE OF THE TRENCH IS FLAT AND PERPENDICULAR TO THE LINE OF FLOW.

3. THE TRENCH MUST BE A MINIMUM OF 150 mm (6 inches) DEEP AND 150 mm (6 inches) WIDE TO ALLOW FOR THE SILT FENCE FABRIC TO BE LAID IN THE GROUND AND BACKFILLED WITH COMPACTED MATERIAL.

4. SILT FENCE FABRIC SHOULD BE SECURELY FASTENED TO EACH STEEL OR WOOD SUPPORT POST OR TO WOVEN WIRE , WHICH IS IN TURN ATTACHED TO THE STEEL OR WOOD FENCE POST.

5. INSPECTION SHALL BE MADE WEEKLY OR AFTER EACH RAINFALL EVENT AND REPAIR OR REPLACEMENT SHALL BE MADE PROMPTY AS NEEDED.

6. SILT FENCE SHALL BE REMOVED WHEN THE SITE IS COMPLETELY STABILIZED SO AS NOT TO BLOCK OR IMPEDE STORM FLOW OR DRAINAGE.

7. ACCUMULATED SILT SHALL BE REMOVED WHEN IT REACHES A DEPTH OF 150 mm (6 inches). THE SILT SHALL BE DISPOSED OF ON AN APPROVED SITE AND IN SUCH A MANNER THAT WILL NOT CONTRIBUTE TO ADDITIONAL SILTATION.

CITY OF AUSTIN WATERSHED PROTECTION DEPARTMENT	SILT FENCE
RECORD COPY SIGNED BY MORGAN BYARS 09/01/2011 ADOPTED	THE ARCHITECT/ENGINEER ASSUMES RESPONSIBILITY FOR APPROPRIATE USE OF THIS STANDARD. STANDARD NO. 642S-1

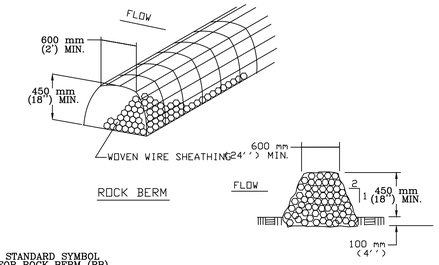

NOTES:

1. USE ONLY OPEN GRADED ROCK 75 to 125 mm (3 to 5") DIAMETER FOR ALL CONDITIONS.
2. THE ROCK BERM SHALL BE ENCASED WITH A WOVEN WIRE SHEATHING HAVING MAXIMUM 25 mm (1") OPENING AND MINIMUM WIRE DIAMETER OF 12.9 mm (20 GAUGE).
3. THE ROCK BERM SHALL BE INSPECTED DAILY OR AFTER EACH RAIN, AND THE STONE AND/OR FABRIC CORE-WOVEN SHEATHING SHALL BE REPLACED WHEN THE STRUCTURE CEASES TO FUNCTION AS INTENDED, DUE TO SEDIMENT ACCUMULATION AMONG THE ROCKS, WASHOUT, CONSTRUCTION TRAFFIC DAMAGE, ETC.
4. IF SEDIMENT REACHES A DEPTH EQUAL TO ONE-THIRD THE HEIGHT OF THE BERM OR 150 mm (6"), WHICHEVER IS LESS. THE SEDIMENT SHALL BE REMOVED AND DISPOSED OF ON AN APPROVED SITE AND IN A MANNER THAT WILL NOT CREATE A SEDIMENTION PROBLEM.
5. WHEN THE SITE IS COMPLETELY STABILIZED,THE BERM AND ACCUMULATED SEDIMENT SHALL BE REMOVED AND DISPOSED OF IN AN APPROVED MANNER.

CITY OF AUSTIN WATERSHED PROTECTION DEPARTMENT	ROCK BERM
RECORD COPY SIGNED BY MORGAN BYARS 8/24/2010 ADOPTED	THE ARCHITECT/ENGINEER ASSUMES RESPONSIBILITY FOR APPROPRIATE USE OF THIS STANDARD. STANDARD NO. 639S-1

NOTES:

1. STONE SIZE: 75-125 mm (3-5") OPEN GRADED ROCK.
2. LENGTH: AS EFFECTIVE BUT NOT LESS THAN 15 m (50').
3. THICKNESS: NOT LESS THAN 200 mm (8").
4. WIDTH: NOT LESS THAN FULL WIDTH OF ALL POINTS OF INGRESS/EGRESS.
5. WASHING: WHEN NECESSARY, VEHICLE WHEELS SHALL BE CLEANED TO REMOVE SEDIMENT PRIOR TO ENTRANCE ONTO PUBLIC ROADWAY . WHEN WASHING IS REQUIRED, IT SHALL BE DONE ON AN AREA STABILIZED WITH CRUSHED STONE AND DRAINS INTO AN APPROVED TRAP OR SEDIMENT BASIN . ALL SEDIMENT SHALL BE PREVENTED FROM ENTERING ANY STORM DRAIN, DITCH OR WATERCOURSE USING APPROVED METHODS.
6. MAINTENANCE: THE ENTRANCE SHALL BE MAINTAINED IN A CONDITION THAT WILL PREVENT TRACKING OR FLOWING OF SEDIMENT ONTO PUBLIC ROADWAY. THIS MAY REQUIRE PERIODIC TOP DRESSING WITH ADDITIONAL STONE AS CONDITIONS DEMAND, AS WELL AS REPAIR AND CLEAN OUT OF ANY MEASURE DEVICES USED TO TRAP SEDIMENT. ALL SEDIMENTS THAT IS SPILLED, DROPPED, WASHED OR TRACKED ONTO PUBLIC ROADWAY MUST BE REMOVED IMMEDIATELY.
7. DRAINAGE: ENTRANCE MUST BE PROPERLY GRADED OR INCORPORATE A DRAINAGE SWALE TO PREVENT RUNOFF FROM LEAVING THE CONSTRUCTION SITE.

CITY OF AUSTIN WATERSHED PROTECTION DEPARTMENT	STABILIZED CONSTRUCTION ENTRANCE
RECORD COPY SIGNED BY J. PATRICK MURPHY 5/23/00 ADOPTED	THE ARCHITECT/ENGINEER ASSUMES RESPONSIBILITY FOR APPROPRIATE USE OF THIS STANDARD. STANDARDS NO. 641S-1

NOTE:
WHERE CURB IS IN PLACE, PROVIDE A 300 mm (1') WIDE OPENING IN THE CURB OR USE A SANDBAG TO DAM TO FORCE WATER OVER THE CURB TO THE TRAP.

CITY OF AUSTIN WATERSHED PROTECTION DEPARTMENT	STORM INLET SEDIMENT TRAP
RECORD COPY SIGNED BY J. PATRICK MURPHY 9/27/00 ADOPTED	THE ARCHITECT/ENGINEER ASSUMES RESPONSIBILITY FOR APPROPRIATE USE OF THIS STANDARD. STANDARDS NO. 632S-1

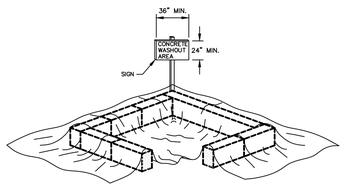

THIS SECTION REMOVED FOR GRAPHICAL REPRESENTATION ONLY. STRAW BALE PERIMETER SHALL BE CONTINUOUS.

NOTES:

1. FACE SIGN TOWARD NEAREST STREET OR ACCESS POINT
2. CONCRETE WASHOUT SHALL BE LOCATED BEHIND CURB AND 50 FT. MINIMUM FROM DRAINAGE INLETS OR WATERCOURSES

CONCRETE WASHOUT AREA
N.T.S.

1 OF 2

NOTES:

1. CONCRETE WASHOUT AREA SHALL BE INSTALLED PRIOR TO ANY CONCRETE PLACEMENT ON SITE.
2. VEHICLE TRACKING CONTROL (DETAIL SW-14) IS REQUIRED IF ACCESS TO CONCRETE WASHOUT AREA IS OFF PAVEMENT.
3. SIGNS SHALL BE PLACED AT THE CONSTRUCTION ENTRANCE, AT THE WASHOUT AREA, AND ELSEWHERE AS NECESSARY TO CLEARLY INDICATE THE LOCATION OF THE CONCRETE WASHOUT AREA TO OPERATORS OF CONCRETE TRUCKS AND PUMP RIGS.
4. THE CONCRETE WASHOUT AREA SHALL BE REPAIRED AND ENLARGED OR CLEANED OUT AS NECESSARY TO MAINTAIN CAPACITY FOR WASTED CONCRETE.
5. AT THE END OF CONSTRUCTION, ALL CONCRETE SHALL BE REMOVED FROM THE SITE AND DISPOSED OF AT AN ACCEPTED WASTE SITE.
6. WHEN THE CONCRETE WASHOUT AREA IS REMOVED, THE DISTURBED AREA SHALL BE SEEDED AND MULCHED OR OTHERWISE STABILIZED IN A MANNER ACCEPTED BY THE CITY.

CONCRETE WASHOUT AREA
N.T.S

2 OF 2

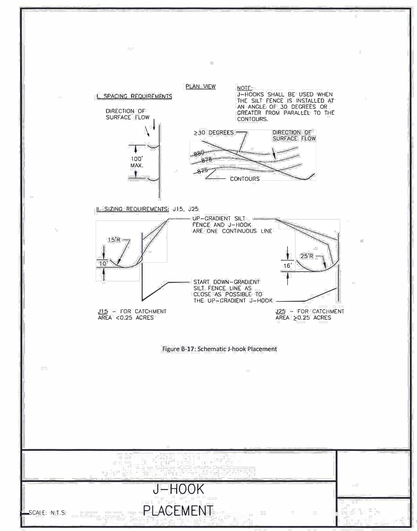

Figure 8-37: Schematic J-hook Placement

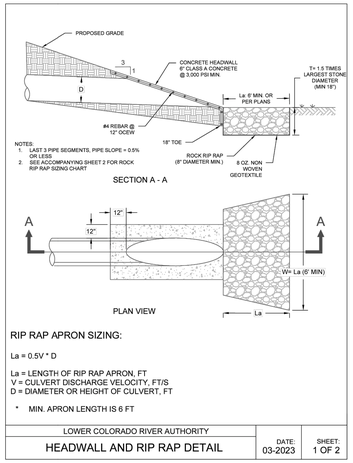

RIP RAP APRON SIZING:

La = 0.5V * D

La = LENGTH OF RIP RAP APRON, FT
V = CULVERT DISCHARGE VELOCITY, FT/S
D = DIAMETER OR HEIGHT OF CULVERT, FT

* MIN. APRON LENGTH IS 6 FT

LOWER COLORADO RIVER AUTHORITY		
HEADWALL AND RIP RAP DETAIL	DATE: 03-2023	SHEET: 1 OF 2

LOWER COLORADO RIVER AUTHORITY		
HEADWALL AND RIP RAP DETAIL	DATE: 03-2023	SHEET: 2 OF 2

PROJECT:

SWEETWATER LOT 3B

LOCATION:

16620 SWEETWATER
VILLAGE DRIVE
BEE CAVE (ETJ)
TEXAS 78669

AES Professional Services LLC

project team

CIVIL ENGINEER:
AES Engineering Consultant
Ahmed El Seweify P.E.
2514 PRESERVE TRAIL, CEDAR PARK, TX 78613
Ph. (512) 785-9034
email: contact@aes-engs.com
Texas Firm F-22721

Owner Representative:
DORADO DEVELOPMENT
CONTACT: David Cummings
p 210.732.5335
e david@doradodev.com

Architect:
VILLA PARK ARCHITECTURE
CONTACT: MARK NEVILLE
p 210.384.8900
e mark@villapark.sa.com

GEOTECHNICAL ENGINEER
ROCK ENGINEERING & TESTING
10856 VANDALE ST. SAN ANTONIO TEXAS 78216
(210) 495-8000
WWW.ROCKTESTING.COM

SURVEY:
DELTA LAND SURVEYING
14900 AVERY RANCH BLVD. STE C200
AUSTIN, TX 78717
512-781-9800

2025-11-12

STATE OF TEXAS
AHMED EL SEWEIFY
141828
LICENSED
PROFESSIONAL ENGINEER

Ahmed El Seweify

Texas 811
Know what's below.
Call before you dig.

REVISION	DATE	ISSUE TITLE

DRAWING TITLE:

EROSION &
SEDIMENTAION DETAILS

PROJECT NO: 10-1072	DRAWN & CHECKED BY: ABS
DATE: 2025-11-12	SCALE: NTS

SHEET NUMBER:

8 of 29

6/9/2025 11:48:48 PM

G:\My Drive\AES ENGINEERING\10-1072 Sweetwater Lot\SEDIMENTATION DETAIL.dwg

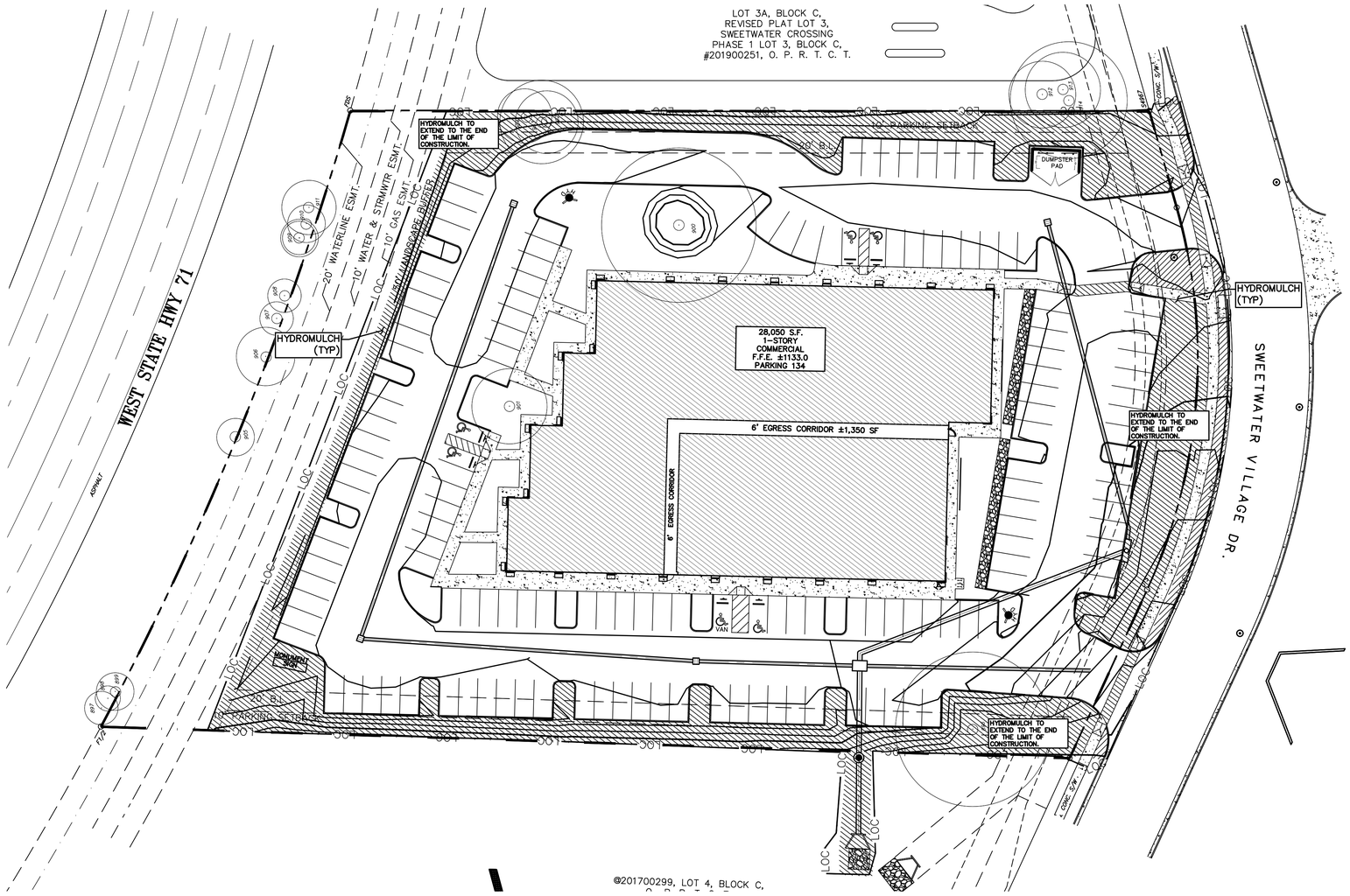

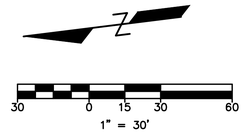

LEGEND

EXISTING	PROPOSED	DESCRIPTION
(XXX)		PROPERTY (R.O.W.) LINE
		RECORD INFORMATION
		LIGHT POLE
	PP	UTILITY POLE
		DOWN GUY
	T	TRANSFORMER (SIZE VARIES)
		GROUND LIGHT
		FIRE HYDRANT
		WATER VALVE
		WATER METER
	WM	WATER METER VAULT
		WATER MANHOLE
	SPC	SPRINKLER CONTROL BOX
		TELEPHONE RISER
		CABLE TV RISER
		ELECTRIC BOX
		ELECTRIC METER
		GAS METER
		GAS VALVE
	TCB	TRAFFIC CONTROL BOX
	TSP	TRAFFIC SIGNAL POST
		UNDERGROUND CABLE MARKER
		UNDERGROUND FIBER OPTIC MARKER
		UNDERGROUND GAS LINE MARKER
		UNDERGROUND TELEPHONE MARKER
		GAS RISER
		GRATE INLET
		CURB INLET (SIZE VARIES)
		CHAIN LINK FENCE
		WIRE FENCE
		STORMSEWER LINE
	XX"W	WATER LINE
	XX"FL	FIRE LINE
	XX"CW	CHILLED WATER
	XX"WW	WASTEWATER LINE
	E	ELECTRIC LINE
	XX"OE	OVERHEAD ELECTRIC
	XX"UT	UNDERGROUND TELEPHONE
	XX"UC	UNDERGROUND CABLE AND INTERNET
	C	UNDERGROUND CABLE AND INTERNET
	TC	TELECOMMUNICATIONS LINE
	EMH	ELECTRIC MANHOLE (SIZE VARIES)
		WASTEWATER MANHOLE (SIZE VARIES)
		STORMSEWER MANHOLE (SIZE VARIES)
	TMH	TELEPHONE MANHOLE (SIZE VARIES)
	CO	WASTEWATER CLEANOUT
		GREASE TRAP
	D	DUMPSTER
		TRASH COMPACTOR
		CURB & GUTTER
		VERTICAL CURB
		EDGE OF PAVEMENT
		IMPERVIOUS WALKWAYS
		CRUSHED GRANITE WALKWAYS
		WALL
	WL	WATER LINE
	WW	WASTEWATER LINE
	FFE	FINISH FLOOR ELEVATION
678	500	CONTOUR
		DIRECTION OF FLOW
	HP	HIGH POINT
		SWALE
	TP	TREE PROTECTION
	LOC	SILT FENCE
		LIMITS OF CONSTRUCTION
		LIMITS OF CONSTRUCTION & SILT FENCE
		ROCK BERM
		INLET PROTECTION
		STABILIZED CONSTRUCTION ENTRANCE
		HYDROMULCH
		ROCK BERM
+????		TREE TO BE SAVED
+????		TREE TO BE REMOVED

NOTES

1. INITIATE PERMANENT STABILIZATION IMMEDIATELY ONCE WORK HAS CEASED AND FINAL GRADE HAS BEEN ACHIEVED IN ANY GIVEN AREA.
2. THE FINAL STABILIZATION/REVEGETATION EFFORTS SHALL BE IN ACCORDANCE WITH THE APPROVED RESTORATION PLAN DETAILS AND SPECIFICATIONS.
3. ALL 3:1 SLOPES OR STEEPER REQUIRE SOIL RETENTION BLANKET (SRB).
4. THE CONTRACTOR IS RESPONSIBLE FOR PROVIDING ADEQUATE WATERING/IRRIGATION TO ACHIEVE THE PERMANENT STABILIZATION REQUIREMENTS IN ALL DISTURBED/REVEGETATED AREAS BEFORE FINAL ACCEPTANCE FOR THIS PROJECT CAN BE OBTAINED.
5. ALL DISTURBED/BARE AREAS WILL REQUIRE PERMANENT STABILIZATION BEFORE FINAL ACCEPTANCE CAN BE ACHIEVED. AVOID DISTURBING AREAS OF THE PROJECT THAT ARE NOT NECESSARY FOR CONSTRUCTION.
6. ANY DISTURBED AREA(S) NOT INDICTED TO BE RESTORED ON THE RESTORATION PLAN REQUIRES THE SAME EFFORTS AS THOSE INDICATED.
7. ALL DISTURBED AREAS MUST MEET THE REQUIREMENT FOR PERMANENT STABILIZATION.
8. THE NOTICE OF TERMINATION (NOT) FOR THIS PROJECT SHALL NOT BE SUBMITTED UNTIL THE TRAVS COUNTY ENVIRONMENTAL INSPECTOR APPROVES CLEARANCE.
9. TYPE 1, CLASS C SLOPE MATTING TO BE INSTALLED ON ALL SLOPES 3:1 OR STEEPER IN ADDITION TO PERMANENT SEEDING.
10. REFER TO THE LANDSCAPE PLAN FOR THE TYPE OF VEGETATION.

PROJECT:

SWEETWATER LOT 3B

LOCATION:

16620 SWEETWATER
VILLAGE DRIVE
BEE CAVE (ETJ)
TEXAS 78669

AES Professional Services LLC

project team

CIVIL ENGINEER:
AES Engineering Consultant
Ahmed El Seweify P.E.
2514 PRESERVE TRAIL, CEDAR PARK, TX 78613
Ph. (512) 785-9034
email: contact@aes-engs.com
Texas Firm F-22721

Owner Representative:
DORADO DEVELOPMENT
CONTACT: David Cummings
p 210.732.5335
e david@doradodev.com

Architect:
VILLA PARK ARCHITECTURE
CONTACT: MARK NEVILLE
p 210.384.8900
e mark@villapark.sa.com

GEOTECHNICAL ENGINEER
ROCK ENGINEERING & TESTING
10856 VANDALE ST. SAN ANTONIO TEXAS 78216
(210) 495-8000
WWW.ROCKTESTING.COM

SURVEY:
DELTA LAND SURVEYING
14900 AVERY RANCH BLVD. STE C200
AUSTIN, TX 78717
512-781-9800

2025-11-12

STATE OF TEXAS
AHMED EL SEWEIFY
141828
LICENSED PROFESSIONAL ENGINEER

Ahmed El Seweify

Texas 811
Know what's below.
Call before you dig.

REVISION	DATE	ISSUE TITLE

DRAWING TITLE:

STABILIZATION &
RESTORATION PLAN

PROJECT NO:	DRAWN & CHECKED BY:
10-1072	ABS
DATE:	SCALE:
2025-11-12	1:30

SHEET NUMBER:

9 of 28

G:\My Drive\AES ENGINEERING\10-1072 Sweetwater\cad\RESTORATION PLAN.dwg

8/24/2025 4:05:59 PM

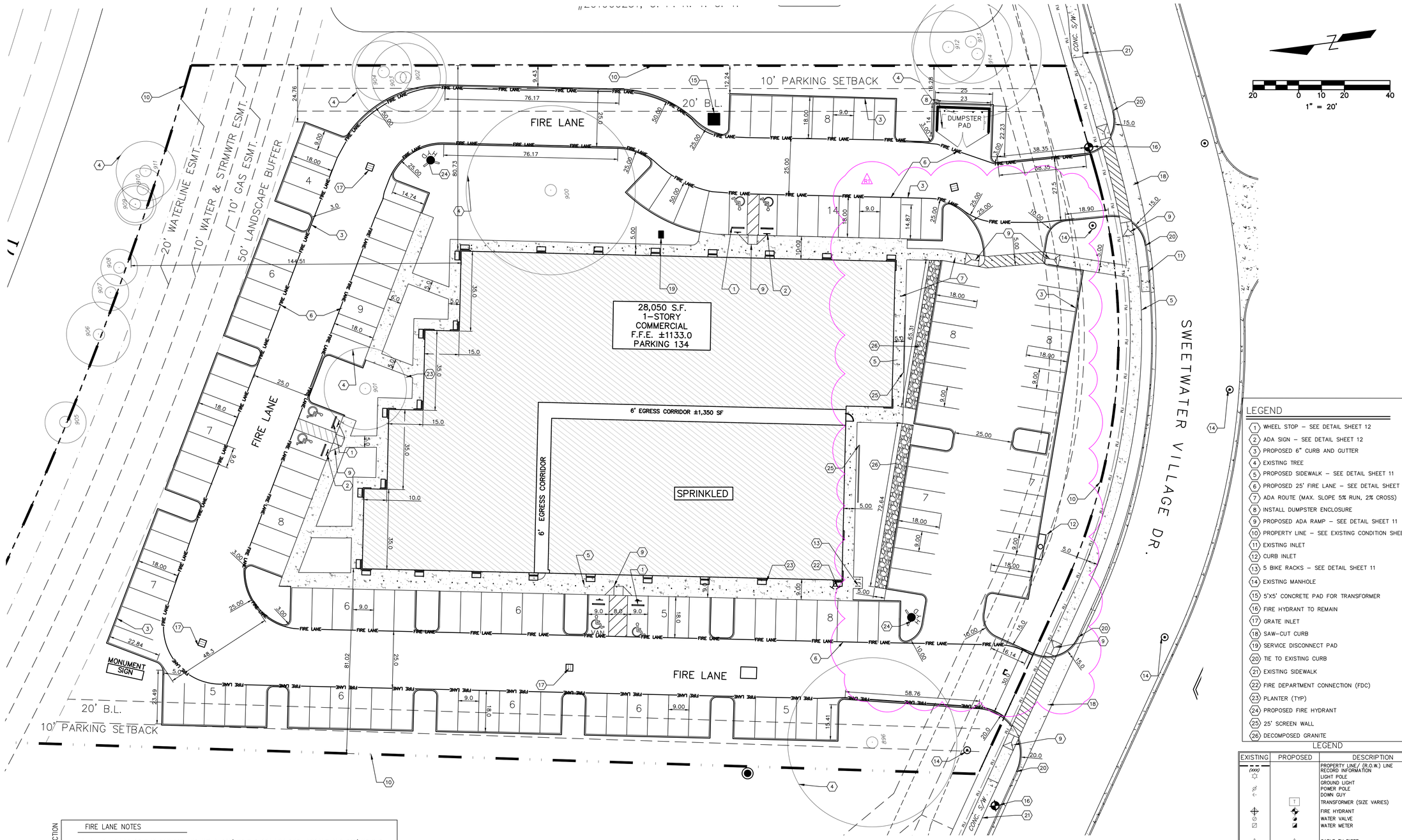

20 0 10 20 40
1" = 20'

LEGEND

1. WHEEL STOP – SEE DETAIL SHEET 12
2. ADA SIGN – SEE DETAIL SHEET 12
3. PROPOSED 6" CURB AND GUTTER
4. EXISTING TREE
5. PROPOSED SIDEWALK – SEE DETAIL SHEET 11
6. PROPOSED 25' FIRE LANE – SEE DETAIL SHEET 12
7. ADA ROUTE (MAX. SLOPE 5% RUN, 2% CROSS)
8. INSTALL DUMPSTER ENCLOSURE
9. PROPOSED ADA RAMP – SEE DETAIL SHEET 11
10. PROPERTY LINE – SEE EXISTING CONDITION SHEET 5
11. EXISTING INLET
12. CURB INLET
13. 5 BIKE RACKS – SEE DETAIL SHEET 11
14. EXISTING MANHOLE
15. 5'X5' CONCRETE PAD FOR TRANSFORMER
16. FIRE HYDRANT TO REMAIN
17. GRATE INLET
18. SAW-CUT CURB
19. SERVICE DISCONNECT PAD
20. TIE TO EXISTING CURB
21. EXISTING SIDEWALK
22. FIRE DEPARTMENT CONNECTION (FDC)
23. PLANTER (TYP)
24. PROPOSED FIRE HYDRANT
25. 25' SCREEN WALL
26. DECOMPOSED GRANITE

LEGEND

EXISTING	PROPOSED	DESCRIPTION
(000)		PROPERTY LINE/ (R.O.W.) LINE RECORD INFORMATION
		LIGHT POLE
		GROUND LIGHT
		POWER POLE
		DOWN GUY
	T	TRANSFORMER (SIZE VARIES)
		FIRE HYDRANT
		WATER VALVE
		WATER METER
		CABLE TV RISER
		ELECTRIC BOX
		ELECTRIC METER
		GRATE INLET
		CURB INLET (SIZE VARIES)
OE	OE	OVERHEAD ELECTRIC
EMH		ELECTRIC MANHOLE (SIZE VARIES)
WWMH		WASTEWATER MANHOLE (SIZE VARIES)
SSMH		STORMSEWER MANHOLE (SIZE VARIES)
TMH	TMH	TELEPHONE MANHOLE (SIZE VARIES)
CO	CO	WASTEWATER CLEANOUT
		CURB & GUTTER
		EDGE OF PAVEMENT
		FIRE LANE DESIGNATION
		HANDICAP ACCESS ROUTE
		CONCRETE SIDEWALKS
		SIGN
		WHEELSTOP
	FFE R 9.0' HC 9.0'	FINISH FLOOR ELEVATION
(25)		PARKING COUNT (REGULAR SPACES)
(HC)		PARKING COUNT (HANDICAP SPACES)
		HANDICAP SPACE
	LOC	LIMITS OF CONSTRUCTION

FIRE PROTECTION — FIRE LANE NOTES

1. ALL BUILDINGS OF THIS PROJECT ARE WITHIN 300' OF THE PRIMARY FIRE HYDRANT AND 500' OF THE SECONDARY FIRE HYDRANT, AND 150' FROM A FIRE LANE OR PUBLIC STREET.
2. THE 25' FIRE LANE SHOWN HEREON SHALL BE MARKED BY PAINTED LINES OR RED TRAFFIC PAINT 6" WIDE TO SHOW THE BOUNDARIES OF THE FIRE LANE. THE WORDS "NO PARKING FIRE LANE" SHALL APPEAR IN 4" WHITE LETTERS AT 20 FT. INTERVALS ON THE RED BORDER MARKINGS ALONG BOTH SIDES OF THE FIRE LANE.
3. FIRE LANES SHALL BE CONSTRUCTED TO ADEQUATELY TOLERATE DEMANDS OF THE HEAVYWEIGHT VEHICLES PROVIDING FIRE PROTECTION SERVICES.

SIGNS — SIGNS AND OUTDOOR ADVERTISING DISPLAY

1. SIGNS AND OUTDOOR ADVERTISING DISPLAY SHALL BE UNDER SEPARATE PERMIT.

ADA — ADA COMPLIANCE

1. ALL INTERIOR AND EXTERIOR ADA DESIGN AND CONSTRUCTION SHALL BE IN ACCORDANCE WITH ALL CURRENT ADA GUIDELINES AND COMPLIANCE OF SAME SHALL BE THE SOLE RESPONSIBILITY OF THE CONSTRUCTION CONTRACTOR AND PROJECT ARCHITECT. CONTRACTOR SHALL REVIEW PLANS AND NOTIFY PROJECT ARCHITECT/ENGINEER WITH ANY MODIFICATIONS REQUIRED FOR SUBSTANTIAL COMPLIANCE.
2. APPROVAL OF THESE PLANS BY THE CITY OF BEE CAVE INDICATES COMPLIANCE WITH APPLICABLE CITY REGULATION ONLY. COMPLIANCE WITH ACCESSIBILITY STANDARDS WAS NOT VERIFIED. THE APPLICANT IS RESPONSIBLE FOR COMPLIANCE WITH ALL APPLICABLE ACCESSIBILITY STANDARDS.
3. SLOPES ON ACCESSIBLE ROUTE MAY NOT EXCEED 1:20 UNLESS DESIGNED AS A RAMP. [ANSI 403.3]
4. ACCESSIBLE ROUTES MUST HAVE A CROSS-SLOPE NO GREATER THAN 1:50. [ANSI 403.3]

GENERAL NOTES

1. SCREENING FOR SOLID WASTE COLLECTION AND LOADING AREAS SHALL BE THE SAME AS, OR OF EQUAL QUALITY TO, PRINCIPAL BUILDING MATERIALS.
2. PAVERS MAY BE USED ON THE ADA ROUTE WITH THE FOLLOWING CONDITIONS:
   - JOINTS BETWEEN PAVERS ½" MAXIMUM
   - VERTICAL DIFFERENCES BETWEEN PAVERS ¼" MAXIMUM
   - RUNNING SLOPE (IN THE DIRECTION OF TRAVEL) 1:20 (5%) MAXIMUM
   - CROSS SLOPE (PERPENDICULAR TO THE DIRECTION OF TRAVEL) ¼" PER FOOT (2%) MAXIMUM

SITE DATA TABLE

1.	LANDING USE:	COMMERCIAL
2.	NUMBER OF STORIES:	1 STORY
3.	BUILDING HEIGHT:	±22 FT
4.	TOTAL BUILDING AREA	28,050 SQ.FT.
5.	TOTAL LEASING AREA	26,655 SQ.FT.
6.	SITE AREA	134,707 SQ.FT. (3.092 AC.)
7.	BUILDING COVERAGE	20.0%
8.	FOUNDATION	SLAB ON GRADE

IMPERVIOUS COVER

GRASS	46,870 SF	1.076 AC.	
BUILDING	28,050 SF	0.644 AC.	
CONCRETE	59,759 SF	1.371 AC.	
TOTAL	134,687 SF	3.092 AC.	
TOTAL IMPERVIOUS COVER			65.16%

PARKING SUMMARY TABLE:

REQUIRED PARKING TABLE

USE	PARKING RATIO	DESCRIPTION	REQUIRED
OFFICE	1 SPACE/300 SF	7,884 SF	27 SPACES
MEDICAL OFFICE	1 SPACE/200 SF	7,884 SF	40 SPACES
RESTAURANT	1 SPACE/100 SF	3,000 SF	30 SPACES
RETAIL	1 SPACE/250 SF	7,885 SF	32 SPACES
TOTAL			129 SPACES

PROVIDED PARKING TABLE	
REGULAR	140
HANDICAP	6
TOTAL PARKING	146

PROJECT:

SWEETWATER LOT 3B

LOCATION:

16620 SWEETWATER
VILLAGE DRIVE
BEE CAVE (ETJ)
TEXAS 78669

AES Professional Services LLC

project team

CIVIL ENGINEER:
AES Engineering Consultant
Ahmed El Seweify P.E.
2514 PRESERVE TRAIL, CEDAR PARK, TX 78613
Ph. (512) 785-9034
email: contact@aes-engs.com
Texas Firm F-22721

Owner Representative:
DORADO DEVELOPMENT
CONTACT: David Cummings
p 210.732.5335
e david@doradodev.com

Architect:
VILLA PARK ARCHITECTURE
CONTACT: MARK NEVILLE
p 210.384.8900
e mark@villapark.sa.com

GEOTECHNICAL ENGINEER
ROCK ENGINEERING & TESTING
10856 VANDALE ST. SAN ANTONIO TEXAS 78216
(210) 495-8000
WWW.ROCKTESTING.COM

SURVEY:
DELTA LAND SURVEYING
14900 AVERY RANCH BLVD. STE C200
AUSTIN, TX 78717
512-781-9800

2025-11-12

STATE OF TEXAS
AHMED EL SEWEIFY
141828
LICENSED
PROFESSIONAL ENGINEER

Texas 811
Know what's below.
Call before you dig.

REVISION	DATE	ISSUE TITLE
01	08/24/2025	SITE LAYOUT

DRAWING TITLE:

SITE PLAN & DIMENSIONS

PROJECT NO:	DRAWN & CHECKED BY:
10-1072	ABS
DATE:	SCALE:
2025-11-12	1":20'

SHEET NUMBER:

10 of 29

G:\My Drive\AES ENGINEERING\10-1072 Sweetwater\cad\SITE PLAN AND DIMENSIONS.dwg

11/12/2025 10:36:26 AM

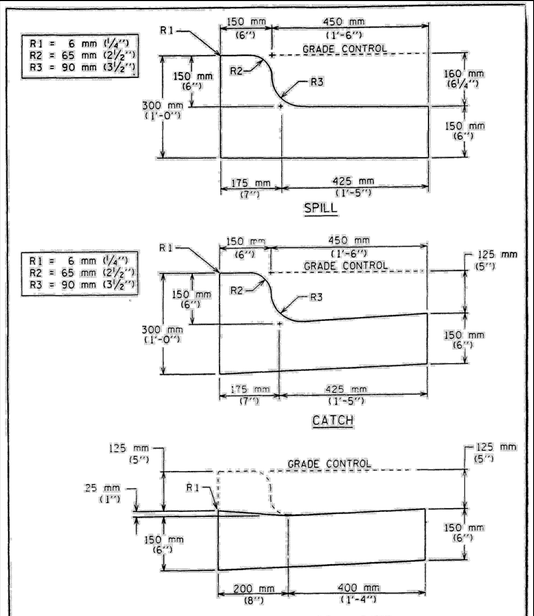

CITY OF AUSTIN
DEPARTMENT OF PUBLIC WORKS AND TRANSPORTATION

CURB AND GUTTER SECTION

Luis Rivera 9/29/99
ADOPTED

THE ARCHITECT/ENGINEER ASSUMES RESPONSIBILITY FOR APPROPRIATE USE OF THIS STANDARD.

STANDARD NO. 430S-1

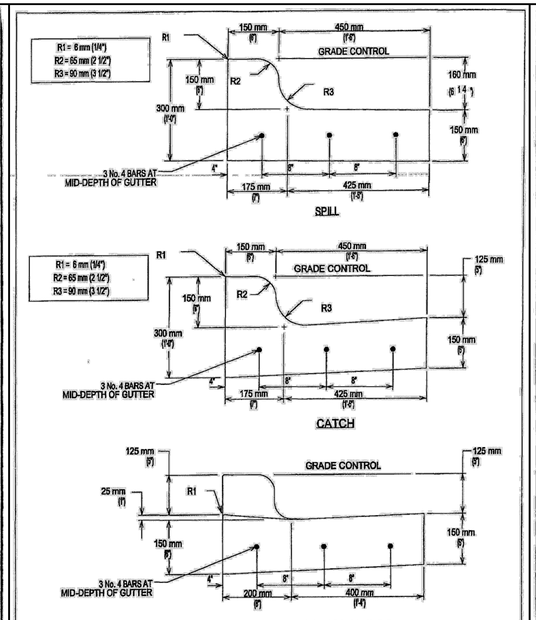

CITY OF AUSTIN
DEPARTMENT OF PUBLIC WORKS

REINFORCED CURB AND GUTTER SECTION

ADOPTED

THE ARCHITECT/ENGINEER ASSUMES RESPONSIBILITY FOR APPROPRIATE USE OF THIS STANDARD.

STANDARD NO. 430S-2

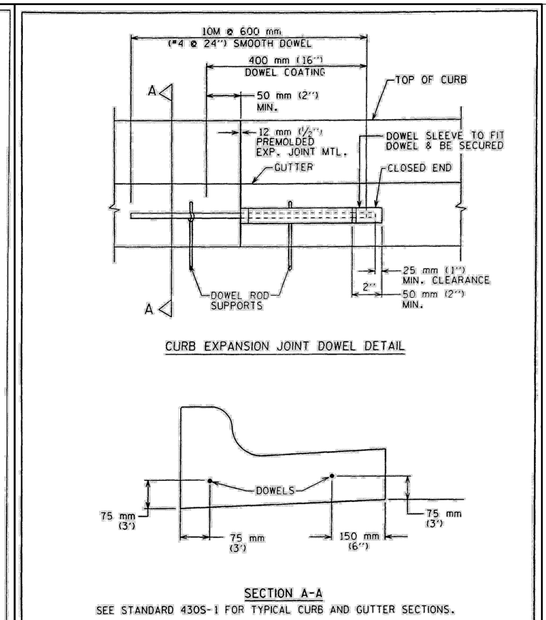

SEE STANDARD 430S-1 FOR TYPICAL CURB AND GUTTER SECTIONS.

CITY OF AUSTIN
DEPARTMENT OF PUBLIC WORKS AND TRANSPORTATION

CURB EXPANSION JOINT DOWEL DETAIL

Luis Rivera 9/29/99
ADOPTED

THE ARCHITECT/ENGINEER ASSUMES RESPONSIBILITY FOR APPROPRIATE USE OF THIS STANDARD.

STANDARD NO. 430S-3

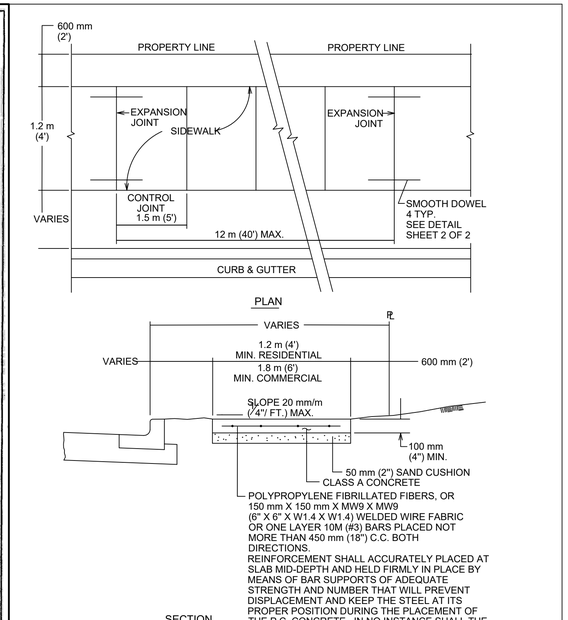

CITY OF AUSTIN
DEPARTMENT OF PUBLIC WORKS

SIDEWALK

RECORD COPY SIGNED BY BILL GARDNER 03/26/08
ADOPTED

THE ARCHITECT/ENGINEER ASSUMES RESPONSIBILITY FOR APPROPRIATE USE OF THIS STANDARD.

STANDARD NO. 432S-1
1 OF 3

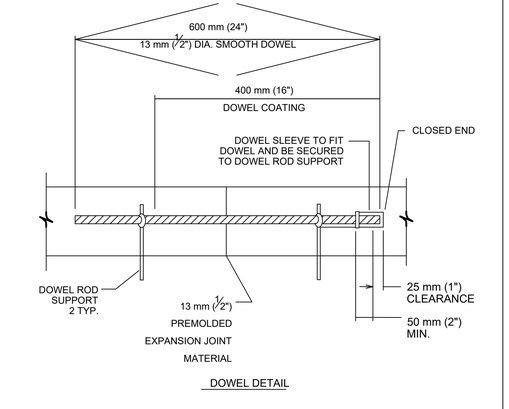

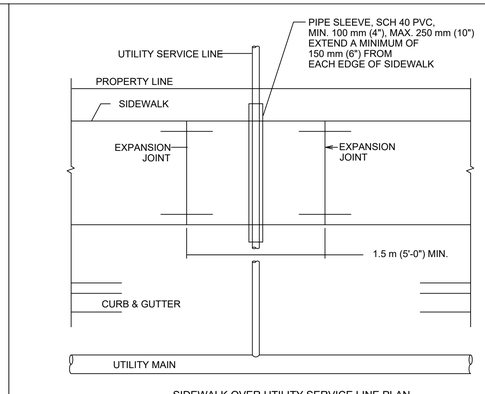

NOTES:
1. THIS STANDARD APPLIES TO THE INSTALLATION OF NEW UTILITIES OR UTILITIES BEING REPLACED BY A NEW LINE.
2. NO JOINTS IN UTILITY SERVICE PIPE TO BE LOCATED INSIDE PVC PIPE SLEEVE.

CITY OF AUSTIN
DEPARTMENT OF PUBLIC WORKS

SIDEWALK

RECORD COPY SIGNED BY BILL GARDNER 03/26/08
ADOPTED

THE ARCHITECT/ENGINEER ASSUMES RESPONSIBILITY FOR APPROPRIATE USE OF THIS STANDARD.

STANDARD NO. 432S-1
2 OF 3

CITY OF AUSTIN
DEPARTMENT OF PUBLIC WORKS

SIDEWALK

RECORD COPY SIGNED BY BILL GARDNER 03/26/08
ADOPTED

THE ARCHITECT/ENGINEER ASSUMES RESPONSIBILITY FOR APPROPRIATE USE OF THIS STANDARD.

STANDARD NO. 432S-1
3 OF 3

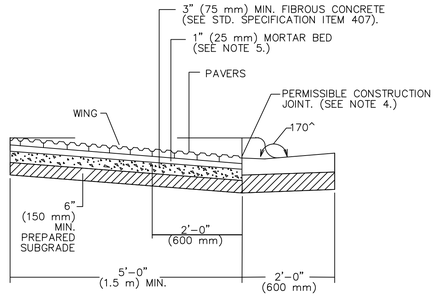

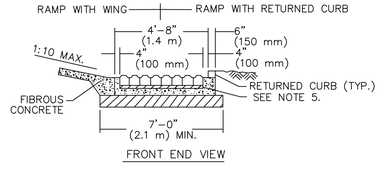

GENERAL NOTES:
1. THIS STANDARD IS APPLICABLE FOR RAMP CONSTRUCTION WITHIN PRIVATE PROPERTY ONLY.
2. PAVERS ARE REQUIRED FOR ALL CURB RAMP INSTALLATIONS.
3. PAVERS WILL HAVE DETECTABLE WARNING THAT CONSISTS OF RAISED TRUNCATED DOMES WITH A DIAMETER OF 0.9" (23 mm), A NOMINAL HEIGHT OF 0.2" (5 mm) AND A NOMINAL CENTER TO CENTER SPACING OF 2.35" (60 mm) AND SHALL CONSTRAST VISUALLY WITH ADJOINING SURFACES, EITHER LIGHT-ON-DARK OR DARK-ON-LIGHT (Re: ADAAG SECTION 4.29.2). MATERIAL USED TO PROVIDE CONTRAST SHALL BE AN INTEGRAL PART OF THE WALKING SURFACE. PAVER PATTERN SHALL BE BASKET WEAVE UNLESS DIRECTED OTHERWISE BY THE ENGINEER OR DESIGNATED REPRESENTATIVE.
4. TYPICAL SIDEWALK WIDTHS AND CURB RADII ARE SHOWN FOR ILLUSTRATION ONLY. REFER TO THE TRANSPORTATION CRITERIA MANUAL FOR SIDEWALK WIDTHS, CURB RADII AND CURB BASIS.
5. THE PERMISSIBLE CONSTRUCTION JOINT BETWEEN THE PAVERS AND THE ADJOINING SURFACE SHALL BE LIMITED TO 1/4" (6 mm) JOINT SIZE. GAPS LARGER THAN 1/4" (6 mm) MUST BE APPROVED BY THE ENGINEER OR DESIGNATED REPRESENTATIVE. ALL JOINTS BETWEEN BRICKS AND ADJOINING SURFACE SHALL BE MORTAR FILLED UNLESS DIRECTED OTHERWISE BY THE ENGINEER OR DESIGNATED REPRESENTATIVE.
6. MORTAR SHALL CONFORM TO STD. SPECIFICATION ITEM SECTION 403S.3.5. MORTAR AND GROUT. ALL OTHER CONCRETE SHALL CONFORM TO STD. SPECIFICATION ITEM 403S, CONCRETE FOR STRUCTURES, UNLESS OTHERWISE NOTED.
7. CURB RAMPS WITH RETURNED CURB MAY ONLY BE USED WHERE PEDESTRIANS WOULD NOT NORMALLY WALK DIAGONALLY ACROSS THE RAMP.

CITY OF AUSTIN
DEPARTMENT OF PUBLIC WORKS

DETECTABLE WARNING-PAVER (PRIVATE PROPERTY)

RECORD COPY SIGNED BY BILL GARDNER 06/21/07
ADOPTED

THE ARCHITECT/ENGINEER ASSUMES RESPONSIBILITY FOR APPROPRIATE USE OF THIS STANDARD.

STANDARD NO. 432S-2B
1 OF 2

CITY OF AUSTIN
DEPARTMENT OF PUBLIC WORKS

DETECTABLE WARNING-PAVER (PRIVATE PROPERTY)

RECORD COPY SIGNED BY BILL GARDNER 06/21/07
ADOPTED

THE ARCHITECT/ENGINEER ASSUMES RESPONSIBILITY FOR APPROPRIATE USE OF THIS STANDARD.

STANDARD NO. 432S-2B
2 OF 2

PROJECT:

SWEETWATER LOT 3B

LOCATION:

16620 SWEETWATER
VILLAGE DRIVE
BEE CAVE (ETJ)
TEXAS 78669

AES Professional Services LLC

project team

CIVIL ENGINEER:
AES Engineering Consultant
Ahmed El Seweify P.E.
2514 PRESERVE TRAIL, CEDAR PARK, TX 78613
Ph. (512) 785-9034
email: contact@aes-engs.com
Texas Firm F-22721

Owner Representative:
DORADO DEVELOPMENT
CONTACT: David Cummings
p 210.732.5335
e david@doradodev.com

Architect:
VILLA PARK ARCHITECTURE
CONTACT: MARK NEVILLE
p 210.384.8900
e mark@villapark.sa.com

GEOTECHNICAL ENGINEER
ROCK ENGINEERING & TESTING
10856 VANDALE ST. SAN ANTONIO TEXAS 78216
(210) 495-8000
WWW.ROCKTESTING.COM

SURVEY:
DELTA LAND SURVEYING
14900 AVERY RANCH BLVD. STE C200
AUSTIN, TX 78717
512-781-9800

2025-11-12

STATE OF TEXAS
AHMED EL SEWEIFY
141828
LICENSED
PROFESSIONAL ENGINEER

Ahmed El Seweify

Texas 811
Know what's below. Call before you dig.

REVISION	DATE	ISSUE TITLE

DRAWING TITLE:

SITE PLAN DETAIL-1

PROJECT NO:	DRAWN & CHECKED BY:
10-1072	AES
DATE:	SCALE:
2025-11-12	NTS

SHEET NUMBER:

11 of 29

10/14/2025 1:12:12 AM

G:\My Drive\AES ENGINEERING\10-1072 Sweetwater\cad\07 SITE PLAN DETAIL1 (1).dwg

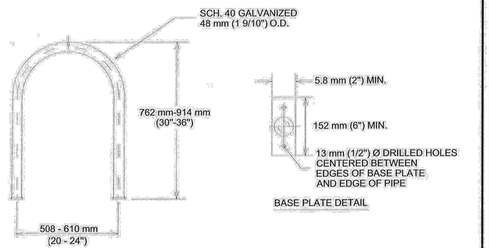

GENERAL NOTES:

1. RACK INSTALLATION METHOD SHALL COMPLY WITH CITY STANDARD DETAIL 710S-3, 710S-4, OR 710S-5.
2. RACK PLACEMENT SHALL COMPLY WITH APPLICABLE CITY STANDARD DETAILS 710S-6A, 710S-6B, OR 710S-6C AND CITY OF AUSTIN CODE SECTION 25-6-477 OR ITS SUCCESSOR.
3. BASE PLATES TO BE 6.35 mm (1/4") PLATES, ASTM A-36 1010-1018 LOW CARBON PRIME STEEL

CITY OF AUSTIN DEPARTMENT OF PUBLIC WORKS	CLASS III STYLE BICYCLE PARKING	
9/26/12 ADOPTED	THE ARCHITECT/ENGINEER ASSUMES RESPONSIBILITY FOR APPROPRIATE USE OF THIS STANDARD.	STANDARD NO. 710S-1 1 OF 1

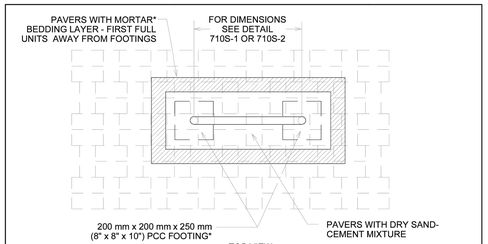

CONSTRUCTION SEQUENCE:

1. PLACE BICYCLE RACK ON PAVERS AND MARK LOCATIONS OF BOLT HOLES AND REMOVE BICYCLE RACK.
2. DRILL THE HOLE LOCATIONS. IF CONCRETE IS HIT BELOW THE SAND CEMENT LAYER, ABOUT 100MM (4") DOWN THEN SKIP TO TO STEP 10. IF CONCRETE IS NOT PRESENT BELOW PAVERS A FOOTING PROCEED TO STEP 3 AS FOOTINGS WILL HAVE TO BE INSTALLED.
- **3. IDENTIFY LOCATION OF FOOTING.
- **4. MARK AND REMOVE EXISTING PAVERS THAT ARE THE FIRST FULL UNITS AWAY FROM FOOTING LOCATIONS, PLACE MORTAR BEDDING LAYER, MORTAR THE JOINT AND REPLACE/COMPACT THE "MARKED" PAVERS IN APPROPRIATE LOCATIONS.
- **5. MARK AND REMOVE EXISTING PAVERS FROM LOCATION ABOVE FOOTING LOCATIONS.
6. EXCAVATE FOR FOOTINGS AND PLACE CLASS "A" PCC CONCRETE.
7. PLACE DRY SAND-CEMENT BEDDING LAYER, REPLACE THE "MARKED" PAVERS IN APPROPRIATE POSITIONS AND COMPACT THE PAVERS IN PLACE.
8. PLACE BICYCLE RACK ON PAVERS AT APPROPRIATE LOCATIONS AND RE-MARK BOLT HOLES.
9. DRILL BOLT HOLES THROUGH THE PAVERS INTO THE PCC FOOTINGS.
10. INSTALL ANCHOR BOLTS AND EPOXY THEM IN PLACE.
11. INSTALL BICYCLE RACK AND BOLT IN PLACE.
12. TO PREVENT THEFT OF BICYCLE RACK OR BIKES, EXPOSED BOLTS MUST BE DEFORMED AND NUTS RE-TIGHTENED TO PREVENT THEM FROM BEING EASILY UNTHREADED. NUTS SHOULD BE TESTED TO ENSURE THAT THEY CANNOT BE EASILY REMOVED AFTER DEFORMATION.

*IF NECESSARY, SEE CONSTRUCTION SEQUENCE FOR DETAILS

** THESE STEPS ARE REQUIRED FOR EXISTING PAVER SIDEWALKS TO MAINTAIN STRUCTURE AND STABILITY OF ADJOINING PAVERS.

DRY SAND-CEMENT BEDDING PLACEMENT:

1. MATERIAL COMPOSED OF ONE PART CEMENT AND 3 PARTS SAND.
2. THE DRY MIXTURE SHALL BE LIGHTLY WETTED PRIOR TO PLACEMENT OF PAVERS.
3. AFTER COMPACTION OF PAVERS, JOINTS SHALL BE FILLED WITH DRY SAND-CEMENT.
4. THE COMPLETED JOINTS SHALL BE FOGGED LIGHTLY WITH WATER.

CITY OF AUSTIN DEPARTMENT OF PUBLIC WORKS	BICYCLE RACK INSTALLATION IN CONCRETE PAVER SIDEWALK-ALTERNATE 1	
RECORD COPY SIGNED BY COUNG TRAN 09/26/12 ADOPTED	THE ARCHITECT/ENGINEER ASSUMES RESPONSIBILITY FOR APPROPRIATE USE OF THIS STANDARD.	STANDARD NO. 710S-3 2 OF 2

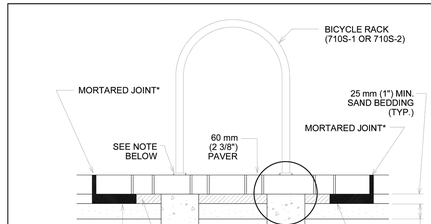

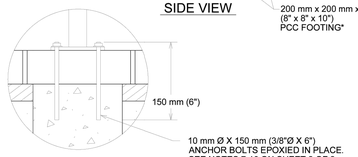

MOUNTING BOLT DETAIL

GENERAL NOTES:

1. RACKS SHALL COMPLY WITH CITY STANDARD DETAIL 710S-1 OR 710S-2.
2. RACK PLACEMENT SHALL COMPLY WITH APPLICABLE CITY STANDARD DETAILS 710S-6A, 710S-6B, OR 710S-6C AND IN COMPLIANCE WITH CITY OF AUSTIN CODE SECTION 25-6-477 OR ITS SUCCESSOR.
3. SAW CUT PAVER TO MATCH PAVER CONFIGURATION.

*IF NECESSARY, SEE CONSTRUCTION SEQUENCE ON PAGE 2 FOR DETAILS

CITY OF AUSTIN DEPARTMENT OF PUBLIC WORKS	BICYCLE RACK INSTALLATION IN CONCRETE PAVER SIDEWALK-ALTERNATE 1	
RECORD COPY SIGNED BY COUNG TRAN 09/26/12 ADOPTED	THE ARCHITECT/ENGINEER ASSUMES RESPONSIBILITY FOR APPROPRIATE USE OF THIS STANDARD.	STANDARD NO. 710S-3 1 OF 2

TRENCH REPAIR IN ASPHALTIC SURFACE OVER FLEXIBLE BASE
(UCM SECTION 5.8.0)

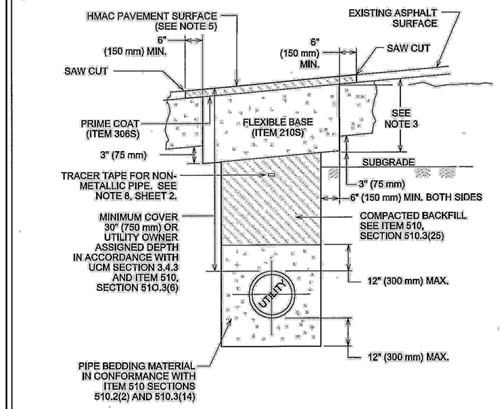

CITY OF AUSTIN DEPARTMENT OF PUBLIC WORKS	FLEXIBLE BASE WITH ASPHALT SURFACE TRENCH REPAIR-EXISTING PAVEMENT	
1/4/11 ADOPTED	THE ARCHITECT/ENGINEER ASSUMES RESPONSIBILITY FOR APPROPRIATE USE OF THIS STANDARD.	STANDARD NO. 1100S-2 1 OF 2

NOTES:

1. THE EXISTING PAVING SURFACE SHALL BE SAW CUT IN A STRAIGHT LINE, A MINIMUM OF 12" (300 mm) WIDER THAN UNDISTURBED SIDES OF THE TRENCH AND SYMMETRICAL ABOUT THE CENTER LINE OF THE EXCAVATION.
2. IF EXCAVATION AREA IS OPEN FOR TEMPORARY PUBLIC USE, THE SURFACE SHALL BE MAINTAINED LEVEL WITH ADJACENT RIDING SURFACE WITH COLD MIX AC OR TEMPORARY HMAC. TEMPORARY MIX SHALL BE PLACED OVER FLEXIBLE BASE.
3. ROAD BASE SHALL BE REPLACED IN KIND WITH BASE THICKNESS EQUAL TO EXISTING BASE THICKNESS PLUS 3" (75 mm), BUT IN NO CASE LESS THAN 12" (300 mm).
4. DAMAGED PAVEMENT OUTSIDE THE TRENCH CUT SHALL BE REMOVED AND REPLACED WITH A BASE THICKNESS OF 10" (250 mm) OR A THICKNESS MATCHING EXISTING, WHICHEVER IS GREATER.
5. REPLACEMENT AC SURFACE LAYER SHALL BE OF THE TYPE AND THICKNESS BASED ON FUNCTIONAL CLASSIFICATION.
   a) MIN. 2" (50 mm) HMAC TYPE "D" FOR TRENCH REPAIR IN LOCAL/RESIDENTIAL STREETS.
   b) MIN. 3" (75 mm) HMAC TYPE "C" FOR TRENCH REPAIR IN COLLECTOR/ARTERIAL STREETS.
   SEE ITEM 340S, SECTION 340S.4.
6. CLASS "J" PC CONCRETE (ITEM 403S) OR CONTROLLED LOW STRENGTH MATERIAL (CLSM) MAY BE SUBSTITUTED IN THESE REPAIRS FOR THE FLEXIBLE BASE AND COMPACTED BACKFILL. PC CONCRETE GREATER THAN A 2 SACK MIX WILL NOT BE ALLOWED.
7. TACK COAT ALL EXPOSED EDGES AND SURFACES (SPEC ITEM 307S).
8. AS PER CITY OF AUSTIN STANDARD SPECIFICATION 510, SECTION 510.2(8)(K)5, FOR ALL NON-METALLIC PIPE, DIRECTLY ABOVE THE CENTERLINE OF THE PIPE AND A MINIMUM OF 12" (300 mm) BELOW THE SUBGRADE, OR A MINIMUM OF 18" (450 mm) BELOW FINISHED GRADE ON AREAS OUTSIDE THE LIMITS OF PAVEMENT, SHALL BE PLACED INDUCTIVE TRACER TAPE IN ACCORDANCE WITH THE MANUFACTURER'S REQUIREMENTS. THE TAPE SHALL BE ENCASED IN A PROTECTIVE, INERT, PLASTIC JACKET AND COLOR CODED IN ACCORDANCE WITH APWA UNIFORM COLOR CODE.

CITY OF AUSTIN DEPARTMENT OF PUBLIC WORKS	FLEXIBLE BASE WITH ASPHALT SURFACE TRENCH REPAIR-EXISTING PAVEMENT	
1/4/11 ADOPTED	THE ARCHITECT/ENGINEER ASSUMES RESPONSIBILITY FOR APPROPRIATE USE OF THIS STANDARD.	STANDARD NO. 1100S-2 2 OF 2

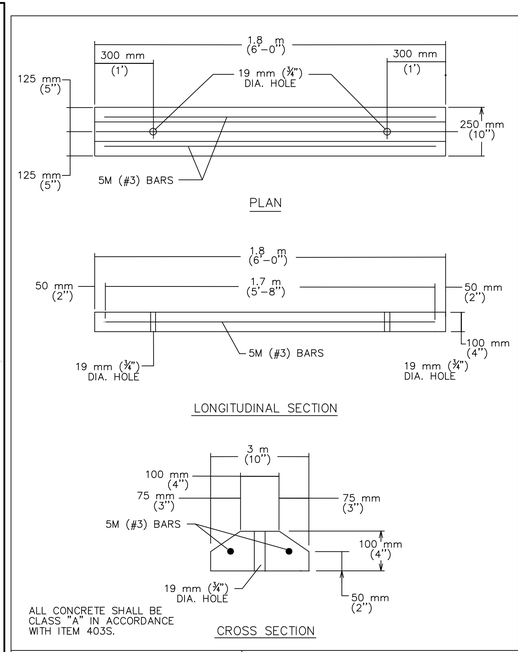

CITY OF AUSTIN DEPARTMENT OF PUBLIC WORKS	PARKING LOT BUMPER CURB	
RECORD COPY SIGNED BY BILL GARDNER 3/15/05 APPROVED ADOPTED	THE ARCHITECT/ENGINEER ASSUMES RESPONSIBILITY FOR APPROPRIATE USE OF THIS STANDARD.	STANDARD NO. 439S-1

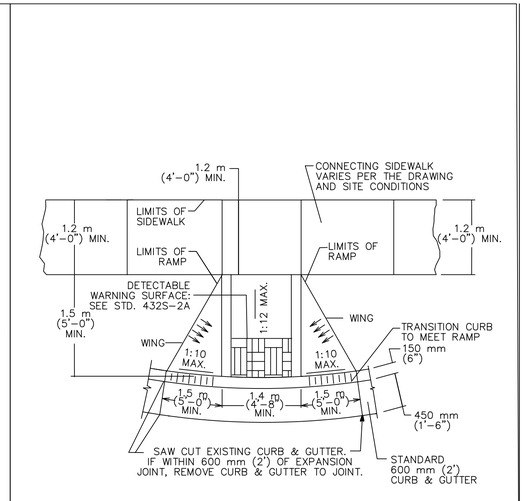

CITY OF AUSTIN DEPARTMENT OF PUBLIC WORKS	TYPE 1 SIDEWALK CURB RAMP	
RECORD COPY SIGNED BY BILL GARDNER 9/14/05 ADOPTED	THE ARCHITECT/ENGINEER ASSUMES RESPONSIBILITY FOR APPROPRIATE USE OF THIS STANDARD.	STANDARD NO. 432S-5

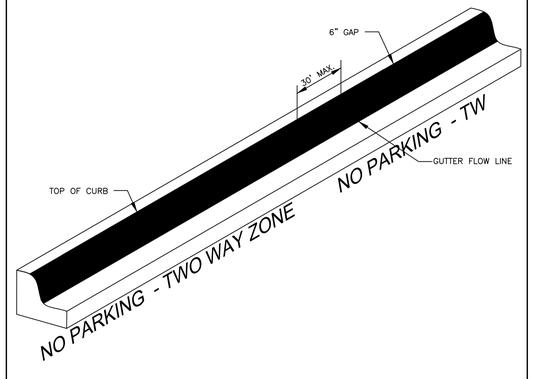

NOTES:

FIRE LANE STRIPING TO BE 6" WIDE RED PAINT WITH "NO PARKING FIRE LANE" IN 4" TALL WHITE LETTERS. WORDING MAY NOT BE SPACED GREATER THAN 30' APART. STRIPING TO BE PAINTED ON THE FACE OF CURB WHEN PRESENT AND PAINTED FLAT ON THE PARKING SURFACE WHEN IT IS NOT.

FIRE LANE MARKING DETAIL

PROJECT:

SWEETWATER LOT 3B

LOCATION:

16620 SWEETWATER
VILLAGE DRIVE
BEE CAVE (ETJ)
TEXAS 78669

AES Professional Services LLC

project team

CIVIL ENGINEER:
AES Engineering Consultant
Ahmed El Seweify P.E.
2514 PRESERVE TRAIL, CEDAR PARK, TX 78613
Ph. (512) 785-9034
email: contact@aes-engs.com
Texas Firm F-22721

Owner Representative:
DORADO DEVELOPMENT
CONTACT: David Cummings
p 210.732.5335
e david@doradodev.com

Architect:
VILLA PARK ARCHITECTURE
CONTACT: MARK NEVILLE
p 210.384.8900
e mark@villapark.sa.com

GEOTECHNICAL ENGINEER
ROCK ENGINEERING & TESTING
10856 VANDALE ST. SAN ANTONIO TEXAS 78216
(210) 495-8000
WWW.ROCKTESTING.COM

SURVEY:
DELTA LAND SURVEYING
14900 AVERY RANCH BLVD. STE C200
AUSTIN, TX 78717
512-781-9800

2025-11-12

STATE OF TEXAS
AHMED EL SEWEIFY
141828
LICENSED
PROFESSIONAL ENGINEER

Ahmed El Seweify

Texas 811
Know what's below.
Call before you dig.

REVISION	DATE	ISSUE TITLE

DRAWING TITLE:

SITE PLAN DETAIL-2

PROJECT NO:	DRAWN & CHECKED BY:
10-1072	AES
DATE: 2025-11-12	SCALE: NTS

SHEET NUMBER:

12 of 28

10/14/2025 12:49:13 AM

G:\My Drive\AES ENGINEERING\10-1072 Sweetwater\cad\07 SITE PLAN DETAIL1.dwg

REPAIR OF FULL DEPTH ASPHALTIC CONCRETE (UCM SECTION 5.5.13)

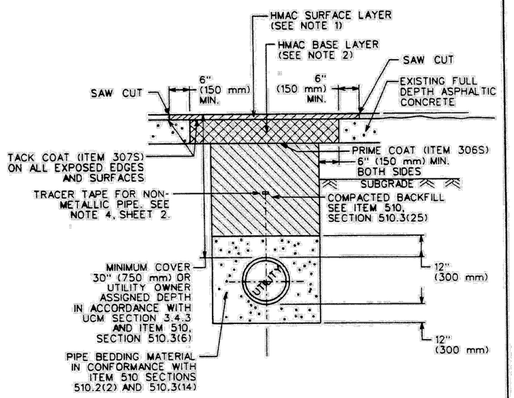

CITY OF AUSTIN DEPARTMENT OF PUBLIC WORKS	FULL DEPTH ASPHALTIC CONCRETE PAVEMENT TRENCH REPAIR	STANDARD NO.
Bill Gardner 9/14/05 ADOPTED	THE ARCHITECT/ENGINEER ASSUMES RESPONSIBILITY FOR APPROPRIATE USE OF THIS STANDARD.	1100S-5 1 OF 2

NOTES:

1. REPLACEMENT AC SURFACE LAYER SHALL BE OF THE TYPE AND THICKNESS BASED ON FUNCTIONAL CLASSIFICATION.
   a) MIN. 2" (50 mm) HMAC TYPE "D" FOR TRENCH REPAIR IN LOCAL/RESIDENTIAL STREETS.
   b) MIN. 3" (75 mm) HMAC TYPE "C" FOR TRENCH REPAIR IN COLLECTOR/ARTERIAL STREETS.
   SEE ITEM 340S, SECTION 340S.4.
2. THE COMBINED THICKNESS OF THE REPLACEMENT AC SURFACE AND BASE LAYERS SHALL MATCH THE THICKNESS OF EXISTING FULL DEPTH AC LAYER. HOWEVER, THE REPLACEMENT AC BASE LAYER SHALL BE A MINIMUM THICKNESS OF 6" (150 mm) OF TYPE A OR B HMA. A BASE LAYER TYPE THAT MATCHES THE NEW HMA SURFACE LAYER (SEE NOTE 1) MAY BE USED, IF THE TOTAL REPAIR AREA IS LESS THAN 300 SQUARE YARDS (250 SQUARE METERS).
3. CLASS "J" PC CONCRETE (ITEM 403S) OR CONTROLLED LOW STRENGTH MATERIAL (CLSM) MAY BE SUBSTITUTED IN THESE REPAIRS FOR THE FLEXIBLE BASE AND COMPACTED BACKFILL. PC CONCRETE GREATER THAN A 2 SACK MIX WILL NOT BE ALLOWED.
4. AS PER CITY OF AUSTIN STANDARD SPECIFICATION 510, SECTION 510.2(8)(K)5, FOR ALL NON-METALLIC PIPE, DIRECTLY ABOVE THE CENTERLINE OF THE PIPE AND A MINIMUM OF 12" (300 mm) BELOW THE SUBGRADE, OR A MINIMUM OF 18" (450 mm) BELOW FINISHED GRADE ON AREAS OUTSIDE THE LIMITS OF PAVEMENT, SHALL BE PLACED INDUCTIVE TRACER TAPE IN ACCORDANCE WITH THE MANUFACTURER'S REQUIREMENTS. THE TAPE SHALL BE ENCASED IN A PROTECTIVE, INERT, PLASTIC JACKET AND COLOR CODED IN ACCORDANCE WITH APWA UNIFORM COLOR CODE.

CITY OF AUSTIN DEPARTMENT OF PUBLIC WORKS	FULL DEPTH ASPHALTIC CONCRETE PAVEMENT TRENCH REPAIR	STANDARD NO.
Bill Gardner 9/14/05 ADOPTED	THE ARCHITECT/ENGINEER ASSUMES RESPONSIBILITY FOR APPROPRIATE USE OF THIS STANDARD.	1100S-5 2 OF 2

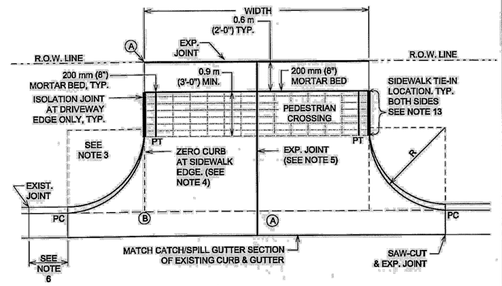

PLAN

NOTE: ALL DRIVEWAYS SHALL BE SLOPED TOWARDS THE STREET FROM THE R.O.W. LINE. ELEVATION OF POINT (A) ABOVE POINT (B) IS, TYPICALLY A MINIMUM OF 150 mm (6") PLUS 20 mm/m (¼" RISE/FOOT) OVER DISTANCE "X" IN METERS (FEET).

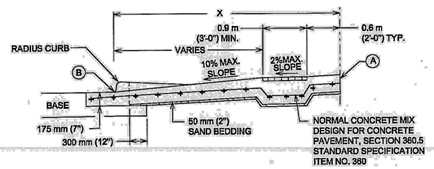

CROSS SECTION

CITY OF AUSTIN DEPARTMENT OF PUBLIC WORKS	TYPE II DRIVEWAY WITH PAVER BAND	STANDARD NO.
2/24/10 ADOPTED	THE ARCHITECT/ENGINEER ASSUMES RESPONSIBILITY FOR APPROPRIATE USE OF THIS STANDARD.	433S-2A 1 OF 3

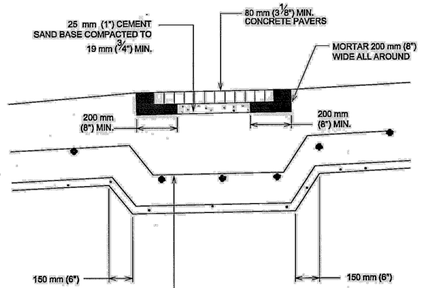

NOTES ON DRY CEMENT-SAND BASE

1. MATERIAL TO BE 1 PART CEMENT AND 3 PARTS SAND.
2. THE DRY MIX SHALL BE LIGHTLY WETTED PRIOR TO PLACEMENT OF PAVERS.
3. AFTER COMPACTION OF PAVERS, JOINTS SHALL BE FILLED WITH DRY CEMENT-SAND MIS AND EXCESS MATERIAL REMOVED FROM PAVING SURFACE.
4. THE COMPLETED JOINTS SHALL BE FOGGED LIGHTLY WITH WATER.

CITY OF AUSTIN DEPARTMENT OF PUBLIC WORKS	TYPE II DRIVEWAY WITH PAVER BAND	STANDARD NO.
2/24/10 ADOPTED	THE ARCHITECT/ENGINEER ASSUMES RESPONSIBILITY FOR APPROPRIATE USE OF THIS STANDARD.	433S-2A 2 OF 3

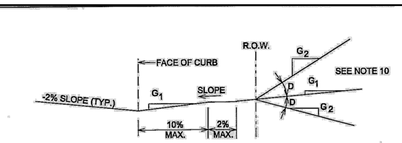

ALLOWABLE GRADES

DRIVEWAY VOLUME (ADT)	D=GRADE CHANGE STD.	MAX.
>1500	0%	3%
500-1500	3%	6%
< 500	6%	15%

NOTES:

1. ALL TYPE II DRIVEWAYS SHALL HAVE RADIUS ENDS.
2. DRIVEWAY WIDTHS AND RADII DIMENSIONS, ONE/TWO WAY TRAVEL REQUIREMENTS, AND GEOMETRIC LAY-OUT ARE HIGHLY VARIABLE, SUBJECT TO SITE SPECIFIC CONDITIONS AND REQUIREMENTS. SEE TRANSPORTATION CRITERIA MANUAL, SECTION 5 "DRIVEWAYS".
3. THE DRIVEWAY EDGE SHALL BE SMOOTHLY TRANSITITIONED INTO THE SIDEWALK TIE-IN LOCATION BEGINNING AT THE RADIUS PC LINE.
4. "ZERO" CURB AT PT OR SIDEWALK EDGE, WHICHEVER IS ENCOUNTERED FIRST.
5. PLACE AN EXPANSION JOINT DOWN THE CENTER OF DRIVEWAY UNDERNEATH THE PAVER BAND. A 300 mm (12") WIDE STRIP OF FILTER FABRIC SHALL BE PLACED OVER THE CENTER EXPANSION JOINT. THE CEMENT-SAND BEDDING LAYER AND PAVERS SHALL BE PLACED OVER THE FILTER FABRIC DURING PAVER INSTALLATION/COMPACTION PROCESS.
6. IF DIMENSION IS LESS THAN 1.5 METERS (5 FEET), REMOVE CURB AND GUTTER TO EXISTING JOINT AND POUR MONOLITHICALLY WITH DRIVEWAY.
7. IF THE BASE IS OVER-EXCAVATED WHERE THE CURB AND GUTTER WERE REMOVED, BACKFILL WITH CONCRETE MONOLITHICALLY WITH THE DRIVEWAY.
8. TYPE II DRIVEWAYS ARE TO BE LOCATED NO CLOSER TO THE CORNER OF INTERSECTING RIGHT OF WAY THAN 60% OF PARCEL FRONTAGE AT 30 METERS (100 FEET); WHICHEVER IS LESS.
9. DRIVEWAY SHALL NOT BE CONSTRUCTED WITHIN THE CURB RETURN OF A STREET INTERSECTION.
10. WHILE THE PROPERTY OWNER REMAINS RESPONSIBLE FOR GRADE BREAKS WITHIN PRIVATE PROPERTY, THE FIRE DEPARTMENT SHALL BE CONSULTED WHERE THE DRIVEWAY IS ESSENTIAL TO EMERGENCY VEHICLE ACCESS AND "G2 IS GREATER THAN 15%.
11. USE 12 MM (1/2") ASPHALT BOARD OR OTHER APPROVED MATERIAL FOR CURB AND GUTTER EXPANSION JOINTS. SIDEWALK, AT THE R.O.W. LINE AND AT MIDWIDTH, SEE NOTE 5.
12. SEE TRANSPORTATION CRITERIA MANUAL, SECTION 5 FOR OTHER DRIVEWAY REQUIREMENTS.
13. THE SIDEWALK, REGARDLESS OF ITS LOCATION WITH RESPECT TO THE CURB OR PROPERTY LINE, SHALL BE CONNECTED TO THE DRIVEWAY AT THESE LOCATIONS.
14. WATER METER BOXES AND WASTEWATER CLEAN OUTS ARE PROHIBITED FROM BEING LOCATED IN DRIVEWAY AREAS.

CITY OF AUSTIN DEPARTMENT OF PUBLIC WORKS	TYPE II DRIVEWAY WITH PAVER BAND	STANDARD NO.
2/24/10 ADOPTED	THE ARCHITECT/ENGINEER ASSUMES RESPONSIBILITY FOR APPROPRIATE USE OF THIS STANDARD.	433S-2A 3 OF 3

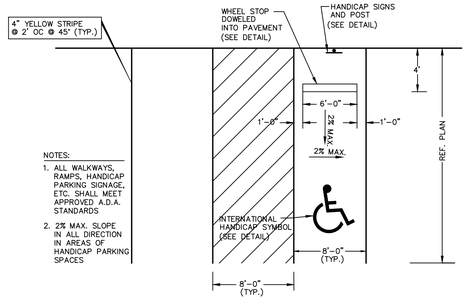

NOTES:

1. ALL WALKWAYS, RAMPS, HANDICAP PARKING SIGNAGE, ETC. SHALL MEET APPROVED A.D.A. STANDARDS
2. 2% MAX. SLOPE IN ALL DIRECTION IN AREAS OF HANDICAP PARKING SPACES

STRIPING FOR 90° VAN PARKING
NOT TO SCALE

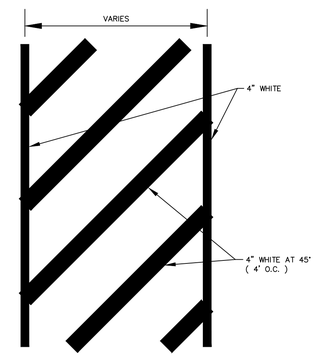

TYPICAL CROSSWALK STRIPING
N.T.S

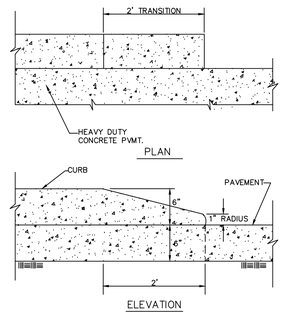

CURB TRANSITION DETAIL
NOT TO SCALE



VAN ONLY HANDICAP SIGN
NOT TO SCALE

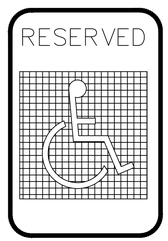

COLORS:

- LEGEND AND BORDER – GREEN
- WHITE SYMBOL ON BLUE BACKGROUND
- BACKGROUND – WHITE

HANDICAP SIGN
NOT TO SCALE

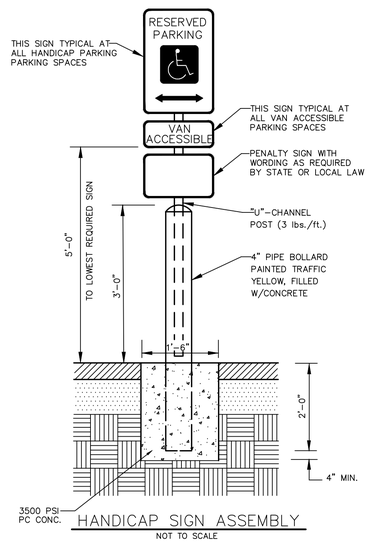

HANDICAP SIGN ASSEMBLY
NOT TO SCALE

PROJECT:

SWEETWATER LOT 3B

LOCATION:

16620 SWEETWATER
VILLAGE DRIVE
BEE CAVE (ETJ)
TEXAS 78669

AES Professional Services LLC

project team

CIVIL ENGINEER:
AES Engineering Consultant
Ahmed El Seweify P.E.
2514 PRESERVE TRAIL, CEDAR PARK, TX 78613
Ph. (512) 785-9034
email: contact@aes-engs.com
Texas Firm F-22721

Owner Representative:
DORADO DEVELOPMENT
CONTACT: David Cummings
p 210.732.5335
e david@doradodev.com

Architect:
VILLA PARK ARCHITECTURE
CONTACT: MARK NEVILLE
p 210.384.8900
e mark@villapark.sa.com

GEOTECHNICAL ENGINEER
ROCK ENGINEERING & TESTING
10856 VANDALE ST. SAN ANTONIO TEXAS 78216
(210) 495-8000
WWW.ROCKTESTING.COM

SURVEY:
DELTA LAND SURVEYING
14900 AVERY RANCH BLVD. STE C200
AUSTIN, TX 78717
512-781-9800

2025-11-12

STATE OF TEXAS · AHMED EL SEWEIFY · 141828 · LICENSED PROFESSIONAL ENGINEER

Ahmed El Seweify

Texas 811 Know what's below. Call before you dig.

REVISION	DATE	ISSUE TITLE

DRAWING TITLE:

SITE PLAN DETAIL-3

PROJECT NO:	DRAWN & CHECKED BY:
10-1072	AES
DATE:	SCALE:
2025-11-12	NTS

SHEET NUMBER:

13 of 29

10/14/2025 1:22:48 AM

G:\My Drive\AES ENGINEERING\10-1072 Sweetwater\Cad\07 SITE PLAN DETAIL3.dwg

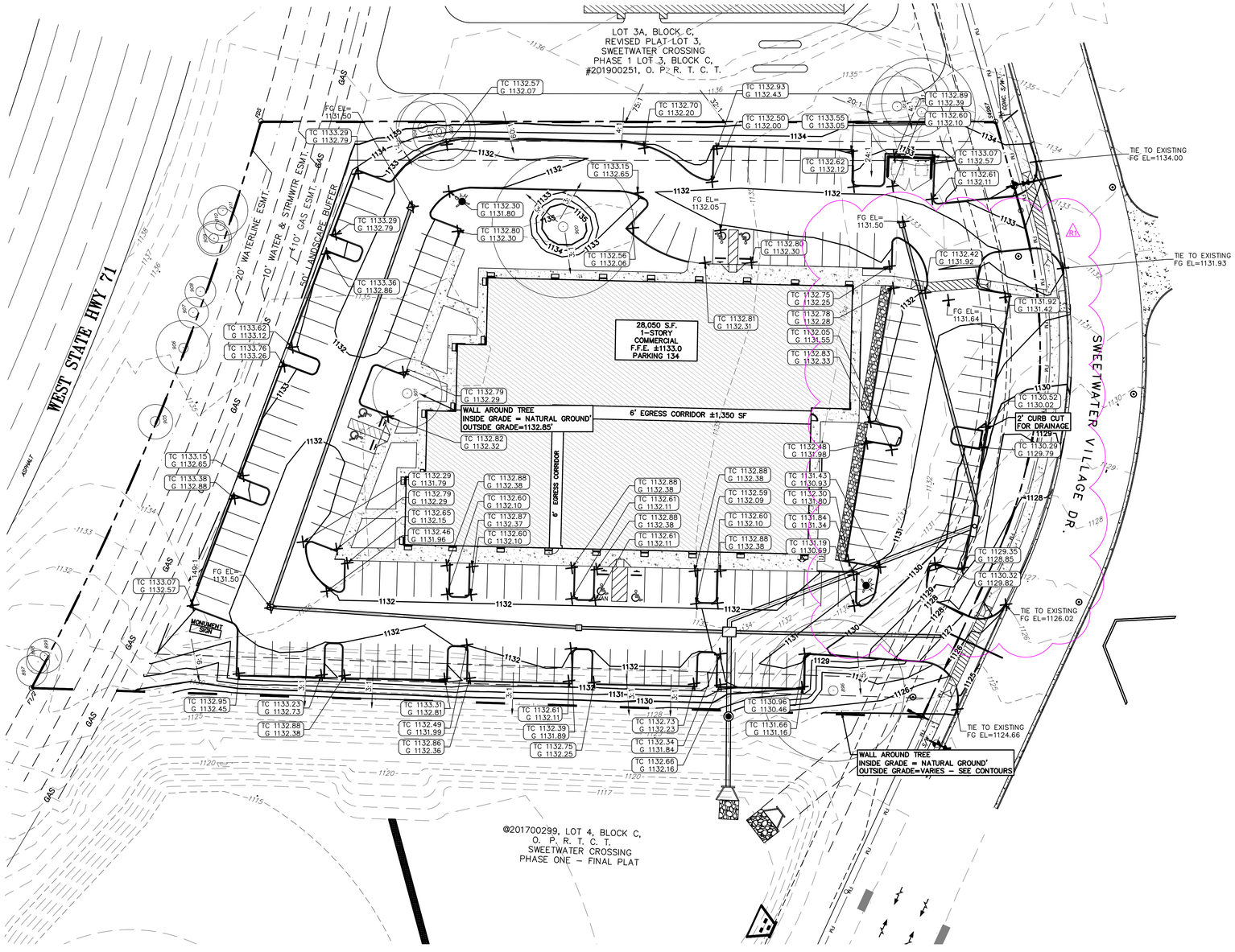

30 0 15 30 60

1" = 30'

LEGEND

EXISTING	PROPOSED	DESCRIPTION
		PROPERTY (R.O.W.) LINE
		RECORD INFORMATION
		LIGHT POLE
	PP	UTILITY POLE
		DOWN GUY
	T	TRANSFORMER (SIZE VARIES)
		GROUND LIGHT
		FIRE HYDRANT
		WATER VALVE
		WATER METER
	WM	WATER METER VAULT
		WATER MANHOLE
		SPRINKLER CONTROL BOX
		TELEPHONE RISER
		CABLE TV RISER
		ELECTRIC BOX
		ELECTRIC METER
		GAS METER
		GAS VALVE
		TRAFFIC CONTROL BOX
		TRAFFIC SIGNAL POST
		UNDERGROUND CABLE MARKER
		UNDERGROUND FIBER OPTIC MARKER
		UNDERGROUND GAS LINE MARKER
		UNDERGROUND TELEPHONE MARKER
		GAS RISER
		GRATE INLET
		CURB INLET (SIZE VARIES)
		CHAIN LINK FENCE
		WIRE FENCE
		STORMSEWER LINE
	XX"W	WATER LINE
	XX"FL	FIRE LINE
	XX"CW	CHILLED WATER
	XX"WW	WASTEWATER LINE
	E	ELECTRIC LINE
	XX"OE	OVERHEAD ELECTRIC
	XX"UT	UNDERGROUND TELEPHONE
	XX"UC	UNDERGROUND CABLE AND INTERNET
	C	UNDERGROUND CABLE AND INTERNET
	TC	TELECOMMUNICATIONS LINE
	EMH	ELECTRIC MANHOLE (SIZE VARIES)
		WASTEWATER MANHOLE (SIZE VARIES)
		STORMSEWER MANHOLE (SIZE VARIES)
	TMH	TELEPHONE MANHOLE (SIZE VARIES)
	CO	WASTEWATER CLEANOUT
		GREASE TRAP
		LIMITS OF CONSTRUCTION
		LIMITS OF CONSTRUCTION & SILT FENCE
		CURB & GUTTER
		VERTICAL CURB
		EDGE OF PAVEMENT
		IMPERVIOUS WALKWAYS
		CRUSHED GRANITE WALKWAYS
		HANDICAP ACCESS ROUTE
		WALL
		HANDICAP SPACE
		SIGN
		WHEELSTOP
		BOLLARD
		DIRECTION OF FLOW
678	678	CONTOUR
	HP	HIGH POINT
	LP	LOW POINT
100.0 x	100.0x	SPOT ELEVATION
	TOWx	TOP OF WALK ELEVATION
	FFE	FINISH FLOOR ELEVATION
		ROCK BERM
		ROCK RIPRAP

NOTES

1. CONTRACTOR SHALL ACHIEVE PROPOSED GRADES WITHIN ±0.2 FEET.
2. DRIVEWAY SLOPE SHALL NOT EXCEED 14% SLOPE.
3. CONTRACTOR SHALL MAINTAIN POSITIVE DRAINAGE AWAY FROM FOUNDATION. GRADE SHALL DROP A MINIMUM OF 6" IN 10' AWAY FROM FOUNDATION.
4. CONTRACTOR SHALL MAINTAIN A MINIMUM SLAB EXPOSURE OF 6".
5. CONTRACTOR SHALL MAINTAIN POSITIVE DRAINAGE IN THE DIRECTION OF FLOW. ELIMINATING LOCALIZED HIGH POINTS OR DEPRESSIONS THAT CAN CAUSE PONDING.
6. MINIMUM ACCEPTABLE FINAL GRADE SLOPE IS 1% UNLESS OTHERWISE NOTED.
7. MAXIMUM ALLOWABLE UN-STABILIZED SLOPE IS 3:1 SLOPES EXCEEDING THIS LIMIT SHALL BE STABILIZED.
8. CONTRACTOR SHALL CONTACT ENGINEER SHOULD THERE BE ANY QUESTION AS TO INTENT OF GRADING PLAN.
9. SPOILS REMOVED FROM SITE SHALL BE TAKEN TO AN APPROVED DISPOSAL FACILITY.
10. FILL SHALL BE PLACED IN ACCORDANCE WITH RECOMMENDATIONS IN SITE SPECIFIC GEO-TECHNICAL REPORT.
11. MAXIMUM SLOPE ALLOWED 3:1.

SPOT ELEVATION LEGEND

BW = BOTTOM OF WALL
TW = TOP OF WALL
G = FINISHED GRADE
FL = FLOW LINE
GB = GRADE BREAK
GT = GUTTER
TC = TOP OF CURB
FFE = FINISH FLOOR ELEVATION

ADA

ADA COMPLIANCE

1. ALL INTERIOR AND EXTERIOR ADA DESIGN AND CONSTRUCTION SHALL BE IN ACCORDANCE WITH ALL CURRENT ADA GUIDELINES AND COMPLIANCE OF SAME SHALL BE THE SOLE RESPONSIBILITY OF THE CONSTRUCTION CONTRACTOR AND PROJECT ARCHITECT. CONTRACTOR SHALL REVIEW PLANS AND NOTIFY PROJECT ARCHITECT/ENGINEER WITH ANY MODIFICATIONS REQUIRED FOR SUBSTANTIAL COMPLIANCE.
2. APPROVAL OF THESE PLANS BY THE CITY OF BEE CAVE INDICATES COMPLIANCE WITH APPLICABLE CITY REGULATION ONLY. COMPLIANCE WITH ACCESSIBILITY STANDARDS WAS NOT VERIFIED. THE APPLICANT IS RESPONSIBLE FOR COMPLIANCE WITH ALL APPLICABLE ACCESSIBILITY STANDARDS.
3. SLOPES ON ACCESSIBLE ROUTE MAY NOT EXCEED 1:20 UNLESS DESIGNED AS A RAMP. [ANSI 403.3]
4. ACCESSIBLE ROUTES MUST HAVE A CROSS-SLOPE NO GREATER THAN 1:50. [ANSI 403.3]

PROJECT:

SWEETWATER LOT 3B

LOCATION:

16620 SWEETWATER
VILLAGE DRIVE
BEE CAVE (ETJ)
TEXAS 78669

AES Professional Services LLC

project team

CIVIL ENGINEER:
AES Engineering Consultant
Ahmed El Seweify P.E.
2514 PRESERVE TRAIL, CEDAR PARK, TX 78613
Ph. (512) 785-9034
email: contact@aes-engs.com
Texas Firm F-22721

Owner Representative:
DORADO DEVELOPMENT
CONTACT: David Cummings
p 210.732.5335
e david@doradodev.com

Architect:
VILLA PARK ARCHITECTURE
CONTACT: MARK NEVILLE
p 210.384.8900
e mark@villapark.sa.com

GEOTECHNICAL ENGINEER
ROCK ENGINEERING & TESTING
10856 VANDALE ST. SAN ANTONIO TEXAS 78216
(210) 495-8000
WWW.ROCKTESTING.COM

SURVEY:
DELTA LAND SURVEYING
14900 AVERY RANCH BLVD. STE C200
AUSTIN, TX 78717
512-781-9800

2025-11-12

STATE OF TEXAS · AHMED EL SEWEIFY · 141828 · LICENSED PROFESSIONAL ENGINEER

Ahmed El Seweify

Texas 811 — Know what's below. Call before you dig.

REVISION	DATE	ISSUE TITLE
1	08/24/2025	SITE LAYOUT

DRAWING TITLE:

GRADING PLAN

PROJECT NO:	DRAWN & CHECKED BY:
10-1072	ABS
DATE:	SCALE:
2025-11-12	1:30

SHEET NUMBER:

14 of 29

10/15/2025 3:34:10 AM

G:\My Drive\AES ENGINEERING\10-1072 Sweetwater\cad\10 GRADING PLAN.dwg

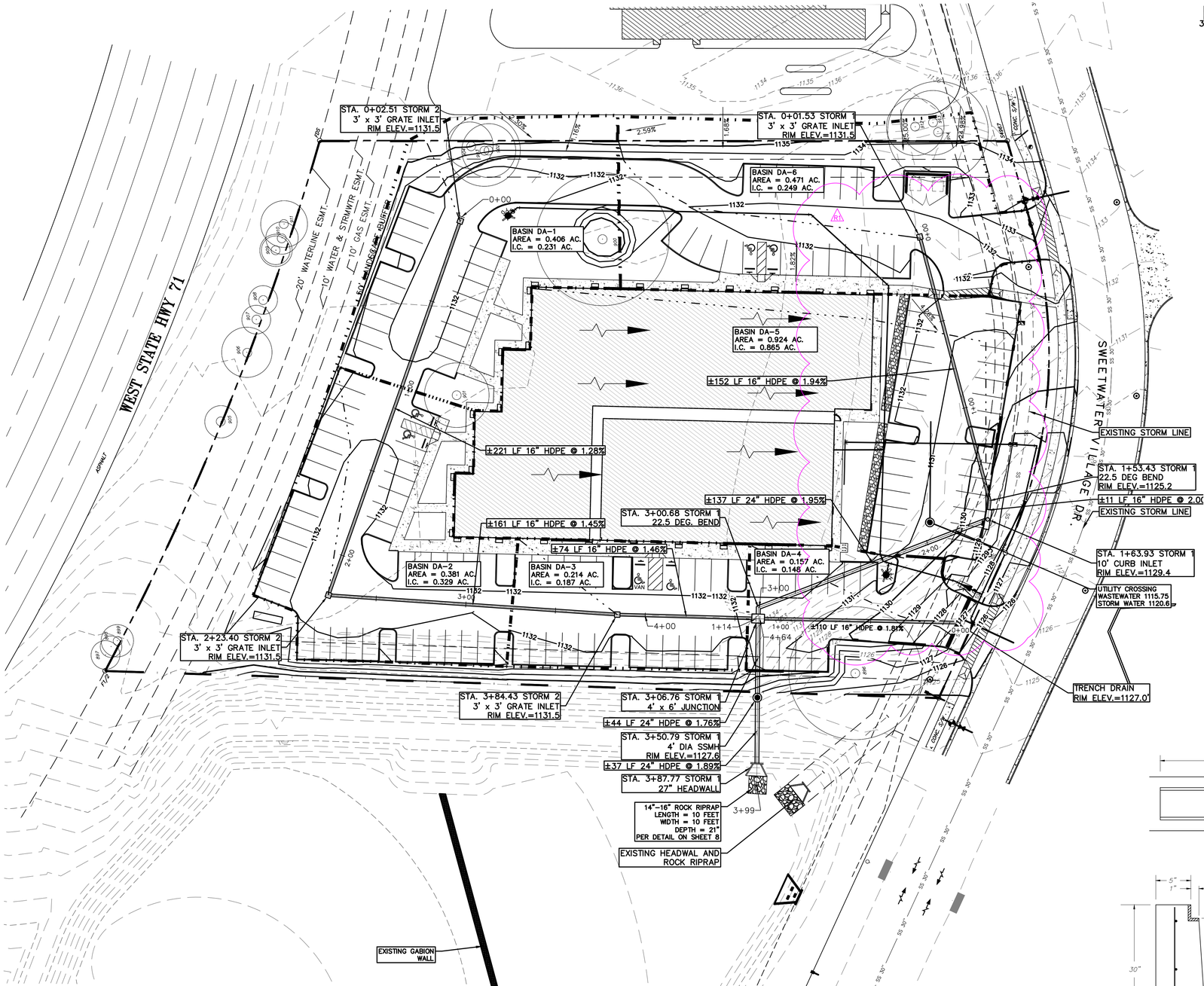

30 0 15 30 60

1" = 30'

LEGEND

EXISTING	PROPOSED	DESCRIPTION
		PROPERTY (R.O.W.) LINE
		RECORD INFORMATION
		LIGHT POLE
	PP	UTILITY POLE
		DOWN GUY
	T	TRANSFORMER (SIZE VARIES)
		GROUND LIGHT
		FIRE HYDRANT
		WATER VALVE
		WATER METER
	WM	WATER METER VAULT
		WATER MANHOLE
SPK		SPRINKLER CONTROL BOX
		TELEPHONE RISER
		CABLE TV RISER
		ELECTRIC BOX
		ELECTRIC METER
		GAS METER
		GAS VALVE
TCB	TCB	TRAFFIC CONTROL BOX
TSP	TSP	TRAFFIC SIGNAL POST
		UNDERGROUND CABLE MARKER
		UNDERGROUND FIBER OPTIC MARKER
		UNDERGROUND GAS LINE MARKER
		UNDERGROUND TELEPHONE MARKER
		GAS RISER
		GRATE INLET
		CURB INLET (SIZE VARIES)
		CHAIN LINK FENCE
		WIRE FENCE
W	XX"W	WATER LINE
FL	XX"FL	FIRE LINE
CW	XX"CW	CHILLED WATER
WW	XX"WW	WASTEWATER LINE
E	E	ELECTRIC LINE
OE	XX"OE	OVERHEAD ELECTRIC
UT	XX"UT	UNDERGROUND TELEPHONE
UC	XX"UC	UNDERGROUND CABLE AND INTERNET
G	G	UNDERGROUND CABLE AND INTERNET
TC	TC	TELECOMMUNICATIONS LINE
EMH	EMH	ELECTRIC MANHOLE (SIZE VARIES)
WWMH		WASTEWATER MANHOLE (SIZE VARIES)
SSMH		STORMSEWER MANHOLE (SIZE VARIES)
TMH	TMH	TELEPHONE MANHOLE (SIZE VARIES)
CO	CO	WASTEWATER CLEANOUT
		LIMITS OF CONSTRUCTION
		LIMITS OF CONSTRUCTION & SILT FENCE
	X	TRASH COMPACTOR
		CURB & GUTTER
		VERTICAL CURB
		EDGE OF PAVEMENT
		IMPERVIOUS WALKWAYS
		CRUSHED GRANITE WALKWAYS
		HANDICAP ACCESS ROUTE
		WALL
		SIGN
		WHEELSTOP
		BOLLARD
678	678	DIRECTION OF FLOW
		CONTOUR
	HP	HIGH POINT
	LP	LOW POINT
100.0x	100.0x	SPOT ELEVATION
	TOW	TOP OF WALK ELEVATION
	FFE	FINISH FLOOR ELEVATION
		ROCK BERM
		ROCK RIPRAP
	BOC	BOTTOM OF CURB
	TOC	TOP OF CURB
	FG	FINISHED GRADE

DEPTH–DURATION VALUES	
STORM EVENT	DCM DEPTH
2–YEAR 24–HOUR	4.14
10–YEAR, 24–HOUR	6.84
25–YEAR, 24–HOUR	8.9
100–YEAR , 24–HOUR	12.8

NOTES

1. DRAINAGE CALCULATION FOR THIS DEVELOPMENT ARE BASED UPON THE CITY OF AUSTIN DRAINAGE DESIGN MANUAL. CALCULATIONS ARE BASED UPON THE ATLAS–14 DEPTH WITH A MINIMUM TIME OF CONCENTRATION OF 5 MINUTES. OVERLAND FLOW AND OTHER HYDRAULIC CALCULATIONS ARE BASED UPON THE MANNING'S EQUATION.
2. SEE DRAINAGE REPORT FOR TIME OF CONCENTRATION CALCULATION AND CN VALUES.

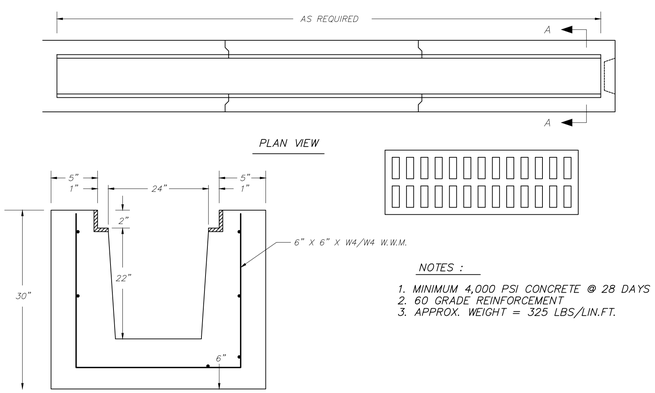

NOTES :

1. MINIMUM 4,000 PSI CONCRETE @ 28 DAYS
2. 60 GRADE REINFORCEMENT
3. APPROX. WEIGHT = 325 LBS/LIN.FT.

SECTION A–A

HYDROLOGY PEAK FLOW SUMMARY TABLE							
POST-DEVELOPMENT RUNOFF (ATLAS-14)							
DA	AREA	TC	CN	Q-2YRS	Q-10YRS	Q-25YRS	Q-100YRS
	ACRE	MIN		CFS	CFS	CFS	CFS
DA-1	0.406	5	91.97	1.28	2.23	2.95	4.3
DA-2	0.381	5	96.09	1.31	2.2	2.87	4.14
DA-3	0.214	5	96.23	0.72	1.21	1.58	2.28
DA-4	0.157	5	97.2	0.55	0.92	1.2	1.73
DA-5	0.924	5	91.79	3.11	5.19	6.76	9.74
DA-6	0.471	5	91.4	1.49	2.61	3.45	5.04
TOTAL				8.46	14.36	18.81	27.23

PROJECT:

SWEETWATER LOT 3B

LOCATION:

16620 SWEETWATER VILLAGE DRIVE
BEE CAVE (ETJ)
TEXAS 78669

AES Professional Services LLC

project team

CIVIL ENGINEER:
AES Engineering Consultant
Ahmed El Seweify P.E.
2514 PRESERVE TRAIL, CEDAR PARK, TX 78613
Ph. (512) 785–9034
email: contact@aes–engs.com
Texas Firm F–22721

Owner Representative:
DORADO DEVELOPMENT
CONTACT: David Cummings
p 210.732.5335
e david@doradodev.com

Architect:
VILLA PARK ARCHITECTURE
CONTACT: MARK NEVILLE
p 210.384.8900
e mark@villapark.sa.com

GEOTECHNICAL ENGINEER
ROCK ENGINEERING & TESTING
10856 VANDALE ST. SAN ANTONIO TEXAS 78216
(210) 495–8000
WWW.ROCKTESTING.COM

SURVEY:
DELTA LAND SURVEYING
14900 AVERY RANCH BLVD. STE C200
AUSTIN, TX 78717
512–781–9800

2025–11–12

STATE OF TEXAS
AHMED EL SEWEIFY
141828
LICENSED PROFESSIONAL ENGINEER

Ahmed El Seweify

Texas 811
Know what's below.
Call before you dig.

REVISION	DATE	ISSUE TITLE
R1	08/24/2025	SITE LAYOUT

DRAWING TITLE:

DRAINAGE PLAN

PROJECT NO:	DRAWN & CHECKED BY:
10–1072	AES
DATE:	SCALE:
2025–11–12	1":30'

SHEET NUMBER:

15 of 29

G:\My Drive\AES ENGINEERING\10-1072 Sweetwater\cad\09 DRAINAGE PLAN.dwg

11/11/2025 7:50:42 PM

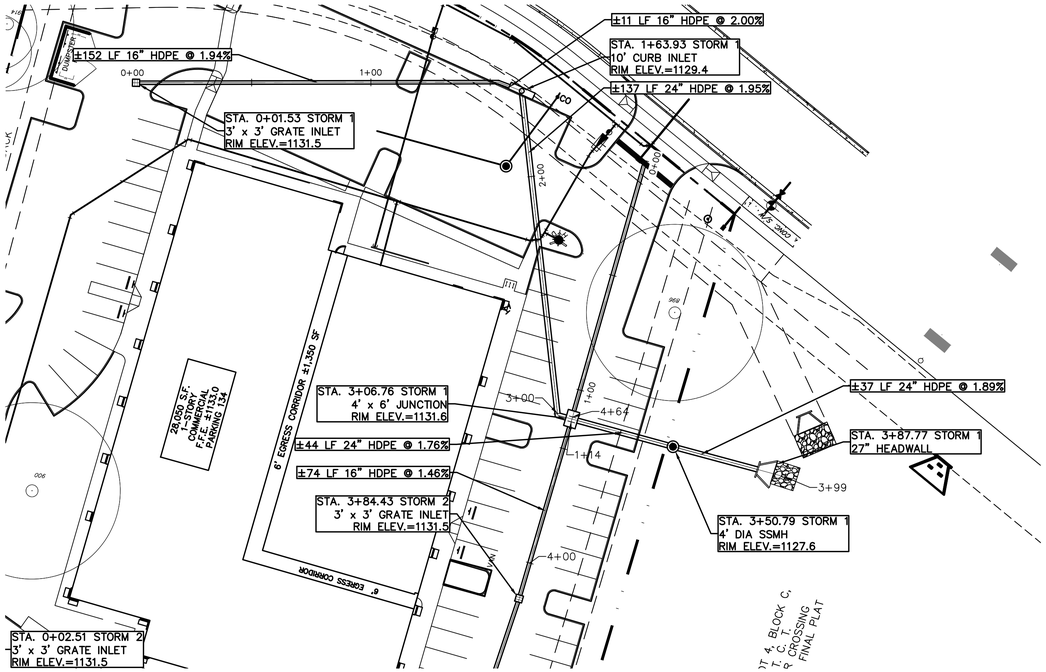

1 PLAN VIEW - ALIGNMENT STORM 1

Scale: 1:30

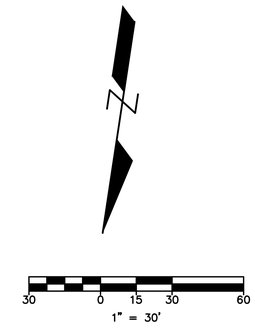

NOTE:
1. PUBLIC STORM SEWER SHALL MEET CITY OF AUSTIN STANDARDS.
2. INSTALL FILTER FABRIC BETWEEN RIP-RAP AND SOIL FOUNDATION.

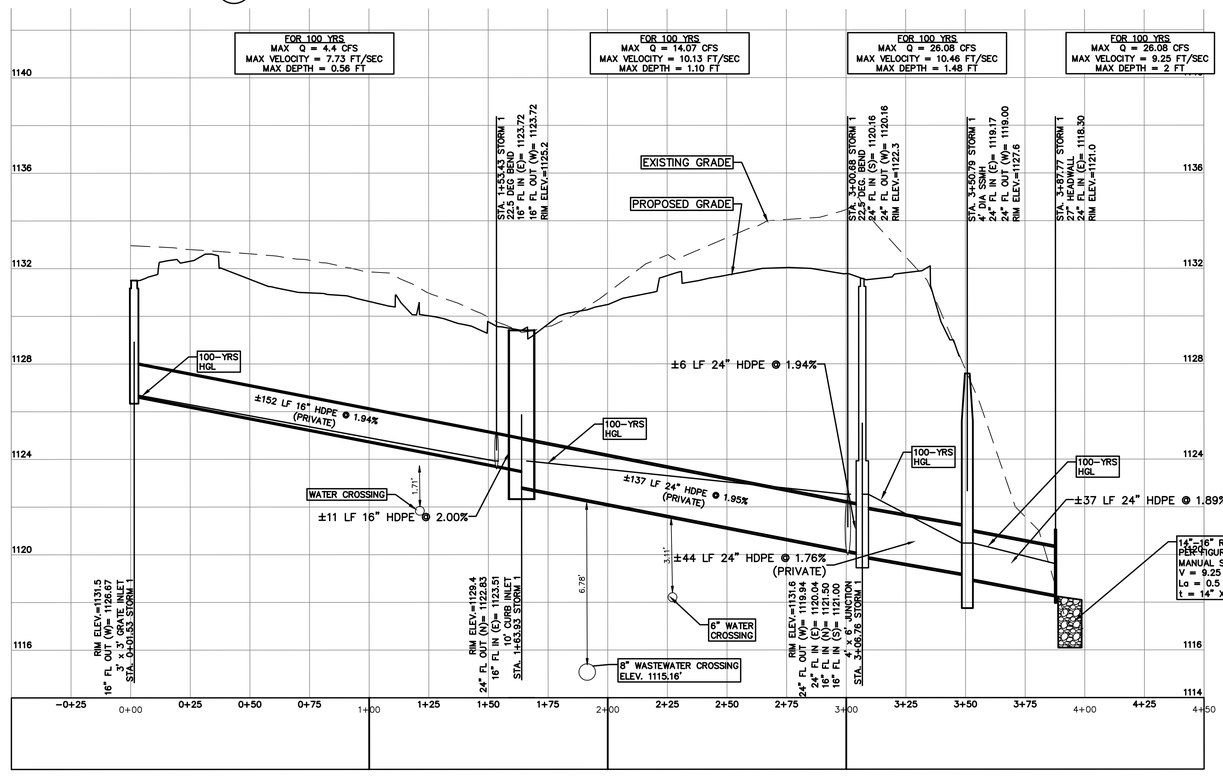

2 PROFILE VIEW - ALIGNMENT STORM 1

Scale: 1:30

LEGEND

EXISTING	PROPOSED	DESCRIPTION
		PROPERTY (R.O.W.) LINE
		RECORD INFORMATION
		LIGHT POLE
	PP	UTILITY POLE
		DOWN GUY
	T	TRANSFORMER (SIZE VARIES)
		GROUND LIGHT
		FIRE HYDRANT
		WATER VALVE
		WATER METER
	WM	WATER METER VAULT
WMH		WATER MANHOLE
SPC		SPRINKLER CONTROL BOX
		TELEPHONE RISER
		CABLE TV RISER
		ELECTRIC BOX
		ELECTRIC METER
		GAS METER
		GAS VALVE
TCB	TCB	TRAFFIC CONTROL BOX
TSP	TSP	TRAFFIC SIGNAL POST
UGM		UNDERGROUND CABLE MARKER
FOM		UNDERGROUND FIBER OPTIC MARKER
GMKR		UNDERGROUND GAS LINE MARKER
UGM		UNDERGROUND TELEPHONE MARKER
GRSR		GAS RISER
		GRATE INLET
		CURB INLET (SIZE VARIES)
		CHAIN LINK FENCE
		WIRE FENCE
W	XX"W	WATER LINE
W	XX"FL	FIRE LINE
CW	XX"CW	CHILLED WATER
WW	XX"WW	WASTEWATER LINE
E	E	ELECTRIC LINE
OE	XX"OE	OVERHEAD ELECTRIC
UT	XX"UT	UNDERGROUND TELEPHONE
UC	XX"UC	UNDERGROUND CABLE AND INTERNET
C	C	UNDERGROUND CABLE AND INTERNET
TC	TC	TELECOMMUNICATIONS LINE
EMH	EMH	ELECTRIC MANHOLE (SIZE VARIES)
WWMH		WASTEWATER MANHOLE (SIZE VARIES)
SSMH		STORMSEWER MANHOLE (SIZE VARIES)
TMH	TMH	TELEPHONE MANHOLE (SIZE VARIES)
CO	CO	WASTEWATER CLEANOUT
		LIMITS OF CONSTRUCTION
		LIMITS OF CONSTRUCTION & SILT FENCE
		TRASH COMPACTOR
		CURB & GUTTER
		VERTICAL CURB
		EDGE OF PAVEMENT
		IMPERVIOUS WALKWAYS
		CRUSHED GRANITE WALKWAYS
		HANDICAP ACCESS ROUTE
		WALL
		SIGN
		WHEELSTOP
		BOLLARD
		DIRECTION OF FLOW
678	678	CONTOUR
	HP	HIGH POINT
	LP	LOW POINT
100.0x	100.0x	SPOT ELEVATION
	TOW	TOP OF WALK ELEVATION
	FFE	FINISH FLOOR ELEVATION
		ROCK BERM
		ROCK RIPRAP
	BOC	BOTTOM OF CURB
	TOC	TOP OF CURB
	FG	FINISHED GRADE

NOTES

1. DRAINAGE CALCULATION FOR THIS DEVELOPMENT ARE BASED UPON THE CITY OF AUSTIN DRAINAGE DESIGN MANUAL, CALCULATIONS ARE BASED UPON THE ATLAS-14 DEPTH WITH A MINIMUM TIME OF CONCENTRATION OF 5 MINUTES. OVERLAND FLOW AND OTHER HYDRAULIC CALCULATIONS ARE BASED UPON THE MANNING'S EQUATION.
2. SEE DRAINAGE REPORT FOR TIME OF CONCENTRATION CALCULATION AND CN VALUES.

PROJECT:

SWEETWATER LOT 3B

LOCATION:

16620 SWEETWATER
VILLAGE DRIVE
BEE CAVE (ETJ)
TEXAS 78669

AES Professional Services LLC

project team

CIVIL ENGINEER:
AES Engineering Consultant
Ahmed El Seweify P.E.
2514 PRESERVE TRAIL, CEDAR PARK, TX 78613
Ph. (512) 785-9034
email: contact@aes-engs.com
Texas Firm F-22721

Owner Representative:
DORADO DEVELOPMENT
CONTACT: David Cummings
p 210.732.5335
e david@doradodev.com

Architect:
VILLA PARK ARCHITECTURE
CONTACT: MARK NEVILLE
p 210.384.8900
e mark@villapark.sa.com

GEOTECHNICAL ENGINEER
ROCK ENGINEERING & TESTING
10856 VANDALE ST. SAN ANTONIO TEXAS 78216
(210) 495-8000
WWW.ROCKTESTING.COM

SURVEY:
DELTA LAND SURVEYING
14900 AVERY RANCH BLVD. STE C200
AUSTIN, TX 78717
512-781-9800

2025-11-12

STATE OF TEXAS
AHMED EL SEWEIFY
141828
LICENSED
PROFESSIONAL ENGINEER

Texas 811
Know what's below.
Call before you dig.

REVISION	DATE	ISSUE TITLE

DRAWING TITLE:

STORM WATER PROFILE

PROJECT NO:	DRAWN & CHECKED BY:
10-1072	AES
DATE:	SCALE:
2025-11-12	1":30'

SHEET NUMBER:

16 of 29

G:\My Drive\AES ENGINEERING\10-1072 Sweetwater\cad\09 DRAINAGE PLAN.dwg

11/11/2025 7:50:42 PM

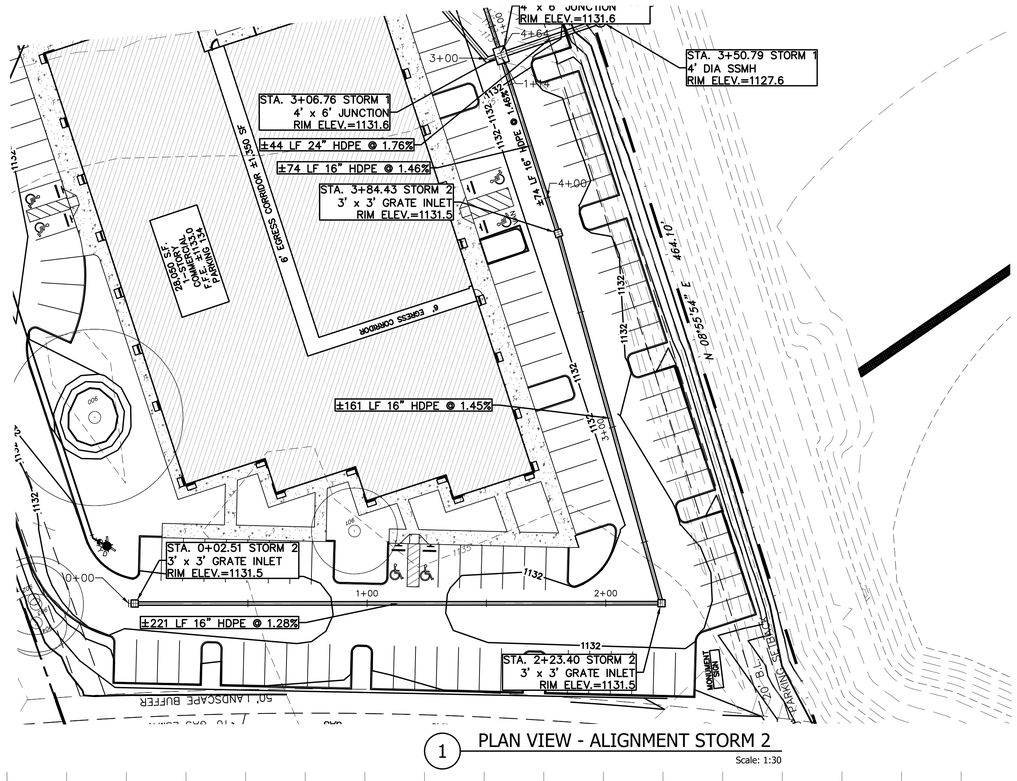

1 PLAN VIEW - ALIGNMENT STORM 2

Scale: 1:30

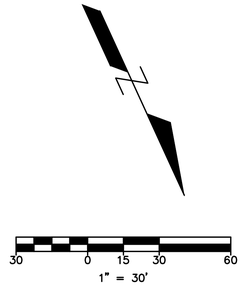

NOTE:

1. PUBLIC STORM SEWER SHALL MEET CITY OF AUSTIN STANDARDS.
2. INSTALL FILTER FABRIC BETWEEN RIP-RAP AND SOIL FOUNDATION.

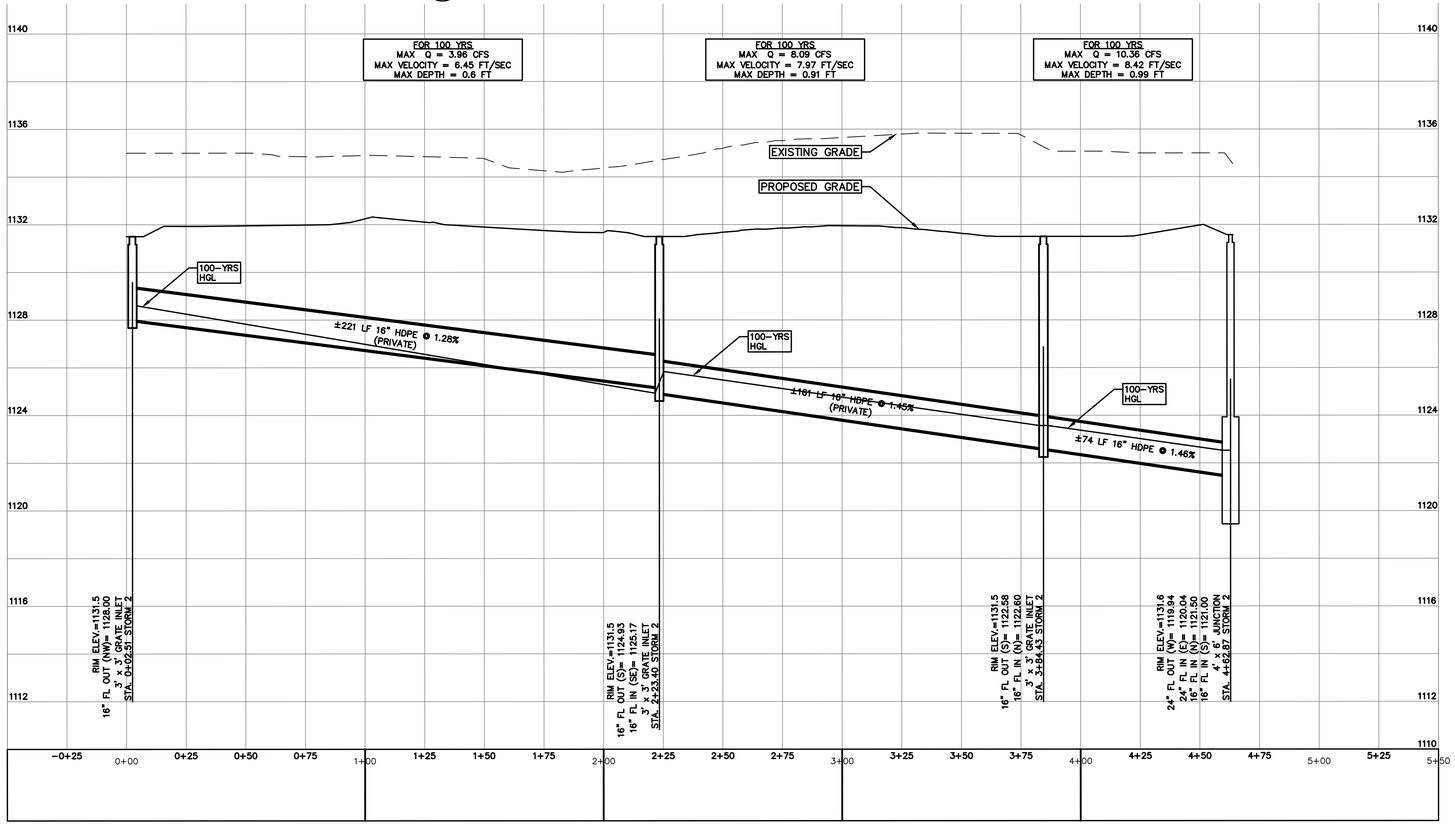

4 PROFILE VIEW - ALIGNMENT STORM 2

Scale: 1:30

LEGEND

EXISTING	PROPOSED	DESCRIPTION
(xxxx)		PROPERTY (R.O.W.) LINE
		RECORD INFORMATION
		LIGHT POLE
	PP	UTILITY POLE
		DOWN GUY
	T	TRANSFORMER (SIZE VARIES)
		GROUND LIGHT
		FIRE HYDRANT
		WATER VALVE
		WATER METER
	WM	WATER METER VAULT
WMH		WATER MANHOLE
SPC		SPRINKLER CONTROL BOX
		TELEPHONE RISER
		CABLE TV RISER
		ELECTRIC BOX
		ELECTRIC METER
		GAS METER
		GAS VALVE
TCB	TCB	TRAFFIC CONTROL BOX
TSP	TSP	TRAFFIC SIGNAL POST
		UNDERGROUND CABLE MARKER
		UNDERGROUND FIBER OPTIC MARKER
		UNDERGROUND GAS LINE MARKER
		UNDERGROUND TELEPHONE MARKER
		GAS RISER
		GRATE INLET
		CURB INLET (SIZE VARIES)
		CHAIN LINK FENCE
		WIRE FENCE
W	XX"W	WATER LINE
FM	XX"FL	FIRE LINE
CW	XX"CW	CHILLED WATER
WW	XX"WW	WASTEWATER LINE
E	E	ELECTRIC LINE
OE	XX"OE	OVERHEAD ELECTRIC
UT	XX"UT	UNDERGROUND TELEPHONE
UC	XX"UC	UNDERGROUND CABLE AND INTERNET
C	C	UNDERGROUND CABLE AND INTERNET
TC	TC	TELECOMMUNICATIONS LINE
EMH	EMH	ELECTRIC MANHOLE (SIZE VARIES)
WWMH		WASTEWATER MANHOLE (SIZE VARIES)
SSMH		STORMSEWER MANHOLE (SIZE VARIES)
TMH	TMH	TELEPHONE MANHOLE (SIZE VARIES)
CO	CO	WASTEWATER CLEANOUT
		LIMITS OF CONSTRUCTION
		LIMITS OF CONSTRUCTION & SILT FENCE
		TRASH COMPACTOR
		CURB & GUTTER
		VERTICAL CURB
		EDGE OF PAVEMENT
		IMPERVIOUS WALKWAYS
		CRUSHED GRANITE WALKWAYS
		HANDICAP ACCESS ROUTE
		WALL
		SIGN
		WHEELSTOP
		BOLLARD
		DIRECTION OF FLOW
678	678	CONTOUR
	HP	HIGH POINT
	LP	LOW POINT
100.0x	100.0x	SPOT ELEVATION
	TOW	TOP OF WALK ELEVATION
	FFE	FINISH FLOOR ELEVATION
		ROCK BERM
		ROCK RIPRAP
	BOC	BOTTOM OF CURB
	TOC	TOP OF CURB
	FG	FINISHED GRADE

NOTES

1. DRAINAGE CALCULATION FOR THIS DEVELOPMENT ARE BASED UPON THE CITY OF AUSTIN DRAINAGE DESIGN MANUAL, CALCULATIONS ARE BASED UPON THE ATLAS-14 DEPTH WITH A MINIMUM TIME OF CONCENTRATION OF 5 MINUTES. OVERLAND FLOW AND OTHER HYDRAULIC CALCULATIONS ARE BASED UPON THE MANNING'S EQUATION.
2. SEE DRAINAGE REPORT FOR TIME OF CONCENTRATION CALCULATION AND CN VALUES.

PROJECT:

SWEETWATER LOT 3B

LOCATION:

16620 SWEETWATER
VILLAGE DRIVE
BEE CAVE (ETJ)
TEXAS 78669

AES Professional Services LLC

project team

CIVIL ENGINEER:
AES Engineering Consultant
Ahmed El Seweify P.E.
2514 PRESERVE TRAIL, CEDAR PARK, TX 78613
Ph. (512) 785-9034
email: contact@aes-engs.com
Texas Firm F-22721

Owner Representative:
DORADO DEVELOPMENT
CONTACT: David Cummings
p 210.732.5335
e david@doradodev.com

Architect:
VILLA PARK ARCHITECTURE
CONTACT: MARK NEVILLE
p 210.384.8900
e mark@villapark.sa.com

GEOTECHNICAL ENGINEER
ROCK ENGINEERING & TESTING
10856 VANDALE ST. SAN ANTONIO TEXAS 78216
(210) 495-8000
WWW.ROCKTESTING.COM

SURVEY:
DELTA LAND SURVEYING
14900 AVERY RANCH BLVD. STE C200
AUSTIN, TX 78717
512-781-9800

2025-11-12

STATE OF TEXAS
AHMED EL SEWEIFY
141828
LICENSED PROFESSIONAL ENGINEER

Ahmed El Seweify

Texas 811
Know what's below. Call before you dig.

REVISION	DATE	ISSUE TITLE

DRAWING TITLE:

STORM WATER PROFILE (2)

PROJECT NO:	DRAWN & CHECKED BY:
10-1072	ABS
DATE:	SCALE:
2025-11-12	1":30'

SHEET NUMBER:

17 of 29

G:\My Drive\AES ENGINEERING\10-1072 Sweetwater\cad\09 DRAINAGE PLAN.dwg

11/11/2025 7:50:42 PM

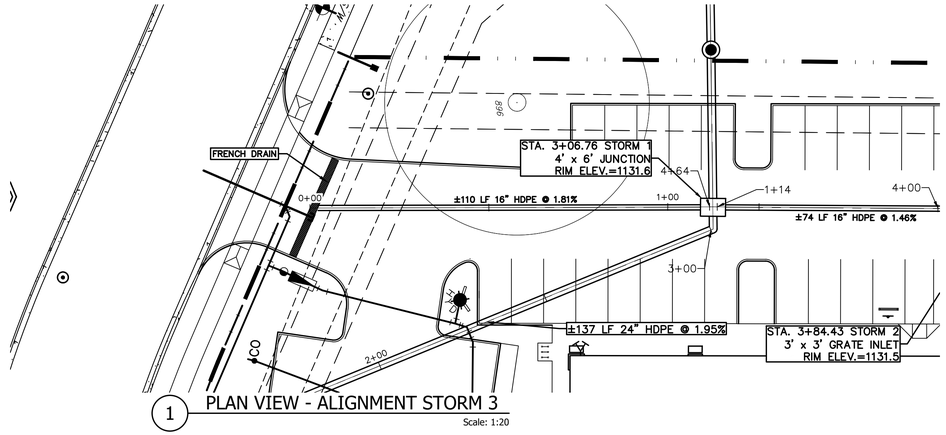

1 PLAN VIEW - ALIGNMENT STORM 3

Scale: 1:20



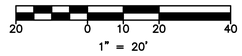

NOTE:

1. PUBLIC STORM SEWER SHALL MEET CITY OF AUSTIN STANDARDS.
2. INSTALL FILTER FABRIC BETWEEN RIP-RAP AND SOIL FOUNDATION.

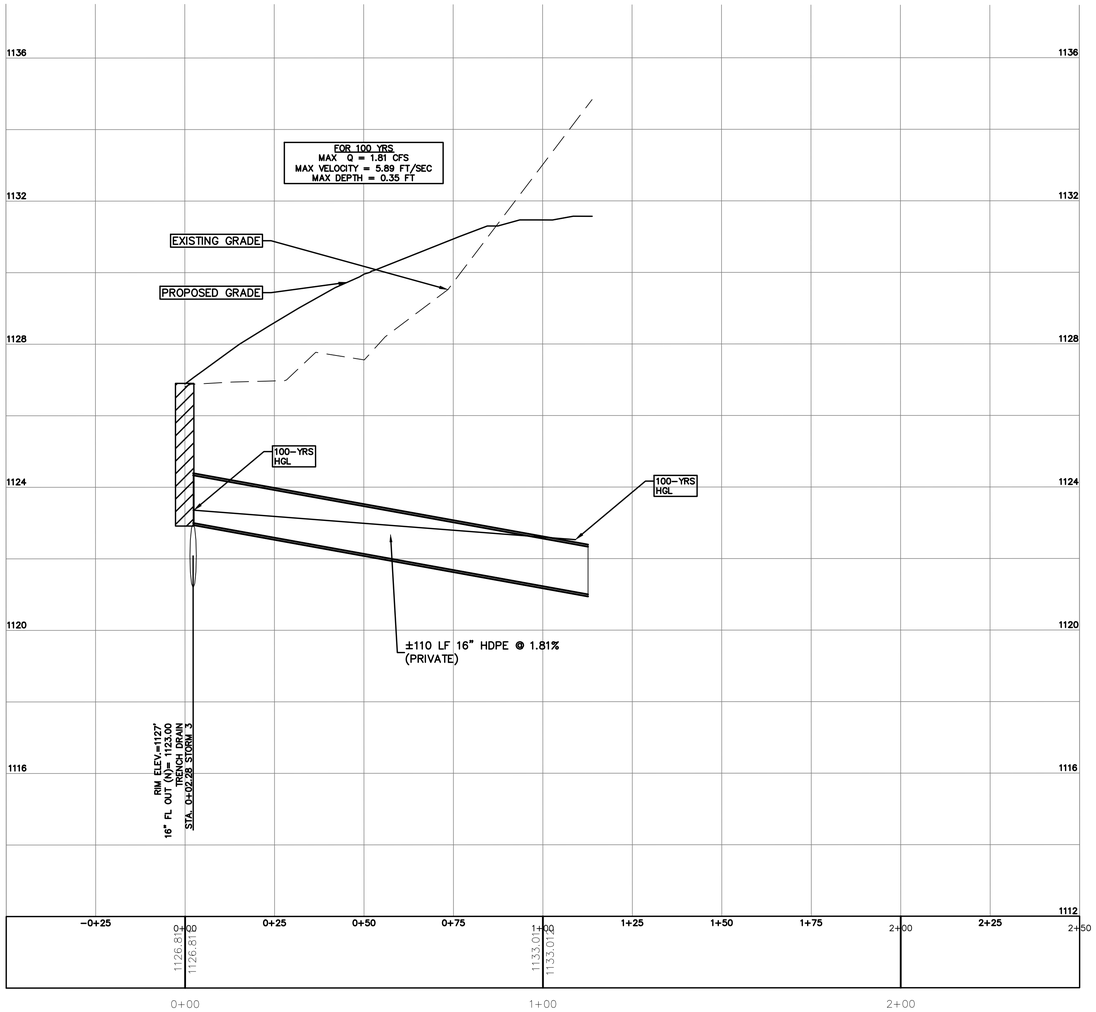

2 PROFILE VIEW - ALIGNMENT STORM 3

Scale: 1:20

LEGEND

EXISTING	PROPOSED	DESCRIPTION
(xxx)		PROPERTY (R.O.W.) LINE
		RECORD INFORMATION
☼		LIGHT POLE
⌀	PP	UTILITY POLE
←	←	DOWN GUY
	T	TRANSFORMER (SIZE VARIES)
⊙		GROUND LIGHT
		FIRE HYDRANT
⌀		WATER VALVE
⌀		WATER METER
	WM	WATER METER VAULT
WMH		WATER MANHOLE
SPCB		SPRINKLER CONTROL BOX
TRSR		TELEPHONE RISER
CATV		CABLE TV RISER
EB	EB	ELECTRIC BOX
EM	EM	ELECTRIC METER
GM	GM	GAS METER
GV	GV	GAS VALVE
TCB	TCB■	TRAFFIC CONTROL BOX
TSP	TSP•	TRAFFIC SIGNAL POST
UGE		UNDERGROUND CABLE MARKER
UGF		UNDERGROUND FIBER OPTIC MARKER
UGG		UNDERGROUND GAS LINE MARKER
UGT		UNDERGROUND TELEPHONE MARKER
UGR		GAS RISER
		GRATE INLET
		CURB INLET (SIZE VARIES)
X X		CHAIN LINK FENCE
		WIRE FENCE
w	XX"W	WATER LINE
FM	XX"FL	FIRE LINE
CW	XX"CW	CHILLED WATER
WW	XX"WW	WASTEWATER LINE
E	E	ELECTRIC LINE
OE	XX"OE	OVERHEAD ELECTRIC
UT	XX"UT	UNDERGROUND TELEPHONE
UC	XX"UC	UNDERGROUND CABLE AND INTERNET
C	C	UNDERGROUND CABLE AND INTERNET
TC	TC	TELECOMMUNICATIONS LINE
EMH	EMH	ELECTRIC MANHOLE (SIZE VARIES)
WMH		WASTEWATER MANHOLE (SIZE VARIES)
SMH		STORMSEWER MANHOLE (SIZE VARIES)
TMH	TMH	TELEPHONE MANHOLE (SIZE VARIES)
CO	CO•	WASTEWATER CLEANOUT
		LIMITS OF CONSTRUCTION
		LIMITS OF CONSTRUCTION & SILT FENCE
		TRASH COMPACTOR
		CURB & GUTTER
		VERTICAL CURB
		EDGE OF PAVEMENT
		IMPERVIOUS WALKWAYS
		CRUSHED GRANITE WALKWAYS
		HANDICAP ACCESS ROUTE
		WALL
		SIGN
		WHEELSTOP
		BOLLARD
		DIRECTION OF FLOW
678	678	CONTOUR
	HP	HIGH POINT
	LP	LOW POINT
100.0 x	100.0x	SPOT ELEVATION
	TOW x	TOP OF WALK ELEVATION
	FFE	FINISH FLOOR ELEVATION
		ROCK BERM
		ROCK RIPRAP
	BOC	BOTTOM OF CURB
	TOC	TOP OF CURB
	FG	FINISHED GRADE

NOTES

1. DRAINAGE CALCULATION FOR THIS DEVELOPMENT ARE BASED UPON THE CITY OF AUSTIN DRAINAGE DESIGN MANUAL, CALCULATIONS ARE BASED UPON THE ATLAS-14 DEPTH WITH A MINIMUM TIME OF CONCENTRATION OF 5 MINUTES. OVERLAND FLOW AND OTHER HYDRAULIC CALCULATIONS ARE BASED UPON THE MANNING'S EQUATION.
2. SEE DRAINAGE REPORT FOR TIME OF CONCENTRATION CALCULATION AND CN VALUES.

PROJECT:

SWEETWATER LOT 3B

LOCATION:

16620 SWEETWATER
VILLAGE DRIVE
BEE CAVE (ETJ)
TEXAS 78669

AES Professional Services LLC

project team

CIVIL ENGINEER:
AES Engineering Consultant
Ahmed El Seweify P.E.
2514 PRESERVE TRAIL, CEDAR PARK, TX 78613
Ph. (512) 785-9034
email: contact@aes-engs.com
Texas Firm F-22721

Owner Representative:
DORADO DEVELOPMENT
CONTACT: David Cummings
p 210.732.5335
e david@doradodev.com

Architect:
VILLA PARK ARCHITECTURE
CONTACT: MARK NEVILLE
p 210.384.8900
e mark@villapark.sa.com

GEOTECHNICAL ENGINEER
ROCK ENGINEERING & TESTING
10856 VANDALE ST. SAN ANTONIO TEXAS 78216
(210) 495-8000
WWW.ROCKTESTING.COM

SURVEY:
DELTA LAND SURVEYING
14900 AVERY RANCH BLVD. STE C200
AUSTIN, TX 78717
512-781-9800

2025-11-12

STATE OF TEXAS
AHMED EL SEWEIFY
141828
LICENSED
PROFESSIONAL ENGINEER

Ahmed El Seweify

Texas 811
Know what's below.
Call before you dig.

REVISION	DATE	ISSUE TITLE

DRAWING TITLE:

STORM WATER PROFILE (3)

PROJECT NO:	DRAWN & CHECKED BY:
10-1072	ABS
DATE: 2025-11-12	SCALE: 1":20'

SHEET NUMBER:

18 of 29

G:\My Drive\AES ENGINEERING\10-1072 Sweetwater\cad\09 DRAINAGE PLAN.dwg

11/11/2025 7:50:42 PM

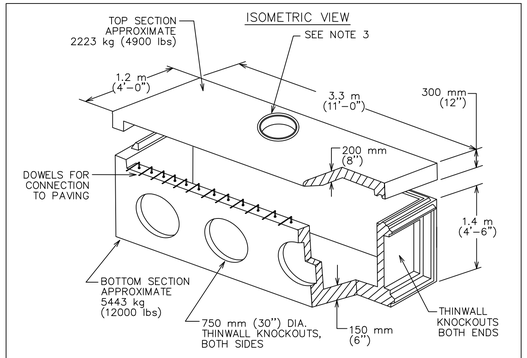

NOTES:
1. ALL CONCRETE SHALL BE CLASS "A" AS PER ITEM 403S.
2. ALL REINFORCING STEEL SHALL BE GRADE 60
3. MANHOLE FRAME AND COVER SHALL BE IN ACCORDANCE WITH CITY OF AUSTIN STANDARD 503S-1.
4. DIMENSIONS RELATING TO REINFORCING STEEL ARE TO CENTERS OF BARS.
5. IN AREAS OF CONFLICT BETWEEN REINFORCING STEEL, PIPES AND MANHOLE FRAME, THE REINFORCEMENT SHALL BE BENT OR ADJUSTED TO CLEAR AS DIRECTED BY THE ENGINEER.
6. PAYMENT FOR INLET AT THE CONTRACT PRICE SHALL INCLUDE THE TRANSITION CURB, IN ACCORDANCE WITH CITY OF AUSTIN STANDARD INLET DESIGN.
7. INVERT OF INLET SHALL BE SLOPED 1:20 WITH FILL CONCRETE BY CONTRACTOR, SHAPED AS "V" SECTION
8. THE INLET AS DESIGNED EXCEEDS THE REQUIREMENTS OF ASTM C478.
9. THIS STANDARD COMPLIES WITH THE CITY OF AUSTIN STANDARD SPECIFICATIONS ITEM NO. 508S.
10. FOR INLET CONNECTION VARIATIONS FOR MAKING A 6 m (20'-0") CURB INLET FROM STANDARD 3 m (10'-0") INLETS, SEE DALWORTH CURB INLET CONNECTION DETAIL SHEET DQ-86-103.

CITY OF AUSTIN DEPARTMENT OF PUBLIC WORKS	CURB INLET 3 m (10') PRECAST TYPE 1 OR TYPE 1-R	
RECORD COPY SIGNED BY BILL GARDNER — 12/09/08 ADOPTED	THE ARCHITECT/ENGINEER ASSUMES RESPONSIBILITY FOR APPROPRIATE USE OF THIS STANDARD.	STANDARD NO. 508S-4 1 OF 5

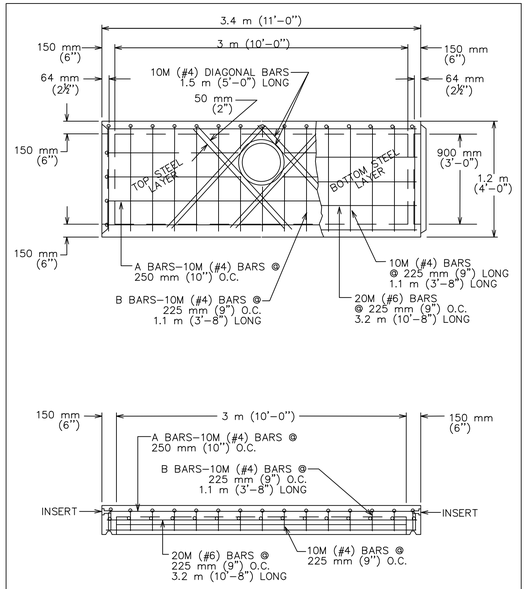

CITY OF AUSTIN DEPARTMENT OF PUBLIC WORKS	CURB INLET 3 m (10') PRECAST TYPE 1 OR TYPE 1-R	
RECORD COPY SIGNED BY BILL GARDNER — 12/09/08 ADOPTED	THE ARCHITECT/ENGINEER ASSUMES RESPONSIBILITY FOR APPROPRIATE USE OF THIS STANDARD.	STANDARD NO. 508S-4 2 OF 5

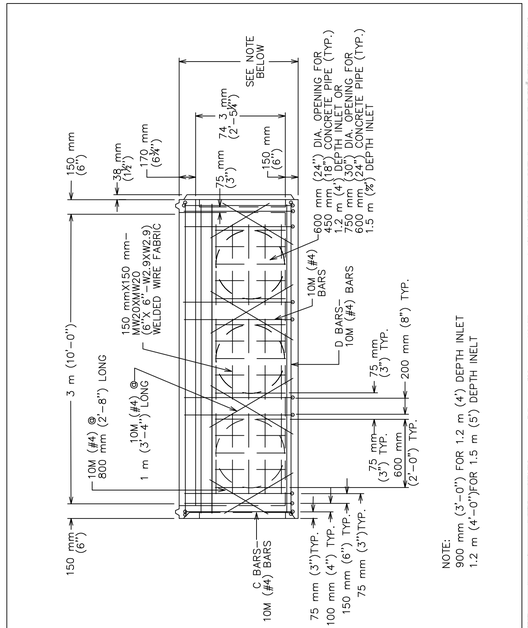

CITY OF AUSTIN DEPARTMENT OF PUBLIC WORKS	CURB INLET 3 m (10') PRECAST TYPE 1 OR TYPE 1-R	
RECORD COPY SIGNED BY BILL GARDNER — 12/09/08 ADOPTED	THE ARCHITECT/ENGINEER ASSUMES RESPONSIBILITY FOR APPROPRIATE USE OF THIS STANDARD.	STANDARD NO. 508S-4 3 OF 5

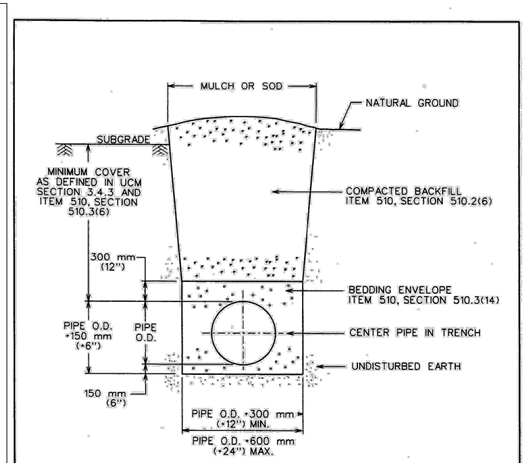

REFERENCES:
1. UTILITY CRITERIA MANUAL SECTION 3.4.3, "FINAL DESIGN"
2. STANDARD SPECIFICATION MANUAL ITEM 510, SECTION 510.2(6), "SELECT BACKFILL OR BORROW"; SECTION 510.3(6), "TRENCH DEPTH AND DEPTH OF COVER"; SECTION 510.3(14), "PIPE BEDDING ENVELOPE"

CITY OF AUSTIN DEPARTMENT OF PUBLIC WORKS	TYPICAL TRENCH DETAIL WITH UNFINISHED SURFACE	
Bill Gardner 3/13/06 ADOPTED	THE ARCHITECT/ENGINEER ASSUMES RESPONSIBILITY FOR APPROPRIATE USE OF THIS STANDARD.	STANDARD NO. 510S-5

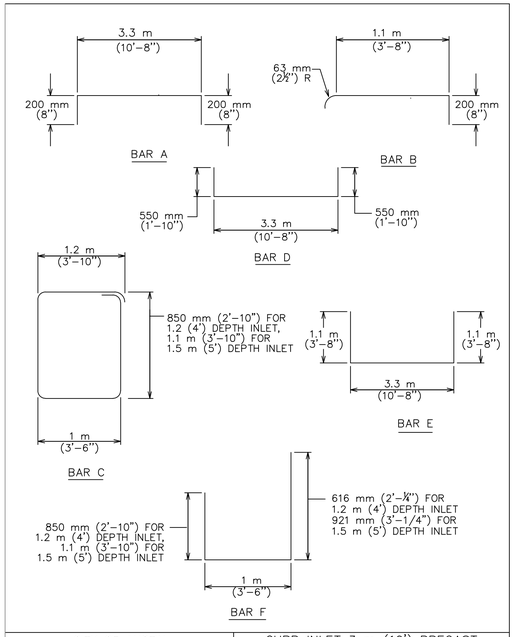

CITY OF AUSTIN DEPARTMENT OF PUBLIC WORKS	CURB INLET 3 m (10') PRECAST TYPE 1 OR TYPE 1-R	
RECORD COPY SIGNED BY BILL GARDNER — 12/09/08 ADOPTED	THE ARCHITECT/ENGINEER ASSUMES RESPONSIBILITY FOR APPROPRIATE USE OF THIS STANDARD.	STANDARD NO. 508S-4 5 OF 5

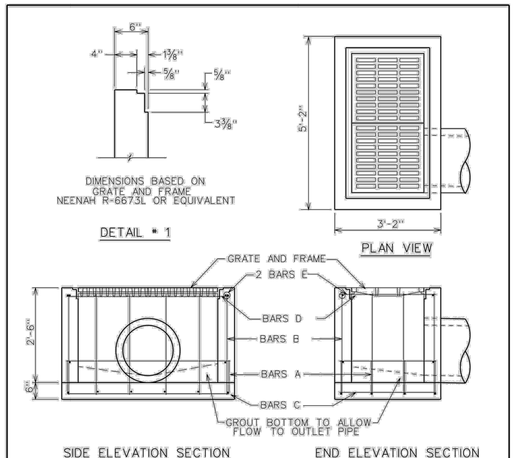

REINFORCING STEEL SCHEDULE

BAR	QTY	SIZE	SPACING	LENGTH	WEIGHT
A	4	4	12"	6'-8"	18
B	16	4	12"	3'-0"	32
C	8	4	12"	2'-10"	15
D	4	4	12"	5'-2"	14
E	4	5	12"	2'-10"	12
				TOTAL WEIGHT---91 LB.	

CITY OF AUSTIN DEPARTMENT OF WATERSHED PROTECTION AND DEVELOPMENT REVIEW	STANDARD DROP INLET	
RECORD COPY SIGNED BY ALLEN BRECHER — 5/24/88 ADOPTED	THE ARCHITECT/ENGINEER ASSUMES RESPONSIBILITY FOR APPROPRIATE USE OF THIS STANDARD.	STANDARD NO. 508-11

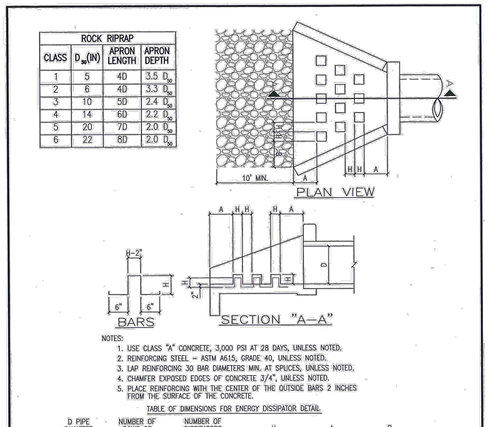

ROCK RIPRAP			
CLASS	D_{50}(IN)	APRON LENGTH	APRON DEPTH
1	5	4D	3.5 D_{50}
2	6	4D	3.3 D_{50}
3	10	5D	2.4 D_{50}
4	14	6D	2.2 D_{50}
5	20	7D	2.0 D_{50}
6	22	8D	2.0 D_{50}

NOTES:
1. USE CLASS "A" CONCRETE, 3,000 PSI AT 28 DAYS, UNLESS NOTED.
2. REINFORCING STEEL – ASTM A615, GRADE 40, UNLESS NOTED.
3. LAP REINFORCING 30 BAR DIAMETERS MIN. AT SPLICES, UNLESS NOTED.
4. CHAMFER EXPOSED EDGES OF CONCRETE 3/4", UNLESS NOTED.
5. PLACE REINFORCING WITH THE CENTER OF THE OUTSIDE BARS 2 INCHES FROM THE SURFACE OF THE CONCRETE.

TABLE OF DIMENSIONS FOR ENERGY DISSIPATOR DETAIL

D PIPE DIAMETER (INCHES)	NUMBER OF ROWS OF DISSIPATORS	NUMBER OF DISSIPATORS IN FRONT ROW	B (INCHES)	A (INCHES)	B (INCHES)
12	1	3	4	4	9.1875
18	2	4	4 1/2	9 1/2	15.5625
24	2	5	6	14 3/4	16 1/2
30	3	6	7 1/2	12 1/2	14 3/8
36	3	6	9	16 1/4	18 5/16
42	3	6	10 1/2	20	22 1/4
48	3	6	12	23 3/4	26 1/4
54	3	6	13 1/2	27 1/2	27 3/4
60	3	6	15	31 1/4	31 5/8

CITY OF KILLEEN DEPARTMENT OF PUBLIC WORKS	
ENERGY DISSIPATOR DETAIL	D-08 SCALE: N.T.S. ISSUE DATE: 07-24-12
CONSTRUCTION STANDARDS AND DETAILS	

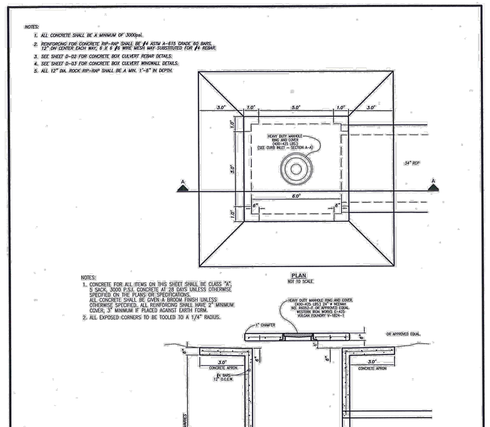

CITY OF KILLEEN DEPARTMENT OF PUBLIC WORKS	
AREA INLET DETAIL	D-30 SCALE: N.T.S. ISSUE DATE: 07-24-12
CONSTRUCTION STANDARDS AND DETAILS	

PROJECT:

SWEETWATER LOT 3B

LOCATION:

16620 SWEETWATER VILLAGE DRIVE
BEE CAVE (ETJ)
TEXAS 78669

AES Professional Services LLC

project team

CIVIL ENGINEER:
AES Engineering Consultant
Ahmed El Seweify P.E.
2514 PRESERVE TRAIL, CEDAR PARK, TX 78613
Ph. (512) 785-9034
email: contact@aes-engs.com
Texas Firm F-22721

Owner Representative:
DORADO DEVELOPMENT
CONTACT: David Cummings
p 210.732.5335
e david@doradodev.com

Architect:
VILLA PARK ARCHITECTURE
CONTACT: MARK NEVILLE
p 210.384.8900
e mark@villapark.sa.com

GEOTECHNICAL ENGINEER
ROCK ENGINEERING & TESTING
10856 VANDALE ST. SAN ANTONIO TEXAS 78216
(210) 495-8000
WWW.ROCKTESTING.COM

SURVEY:
DELTA LAND SURVEYING
14900 AVERY RANCH BLVD. STE C200
AUSTIN, TX 78717
512-781-9800

2025-11-12

STATE OF TEXAS · AHMED EL SEWEIFY · 141828 · LICENSED PROFESSIONAL ENGINEER

Ahmed El Seweify

Texas 811 — Know what's below. Call before you dig.

REVISION	DATE	ISSUE TITLE

DRAWING TITLE:

DRAINAGE DETAILS

PROJECT NO:	DRAWN & CHECKED BY:
10-1072	AES
DATE:	SCALE:
2025-11-12	NTS

SHEET NUMBER:

19 of 29

10/14/2025 2:01:27 AM

G:\My Drive\AES ENGINEERING\10-1072 Sweetwater\cad\drainage detail.dwg

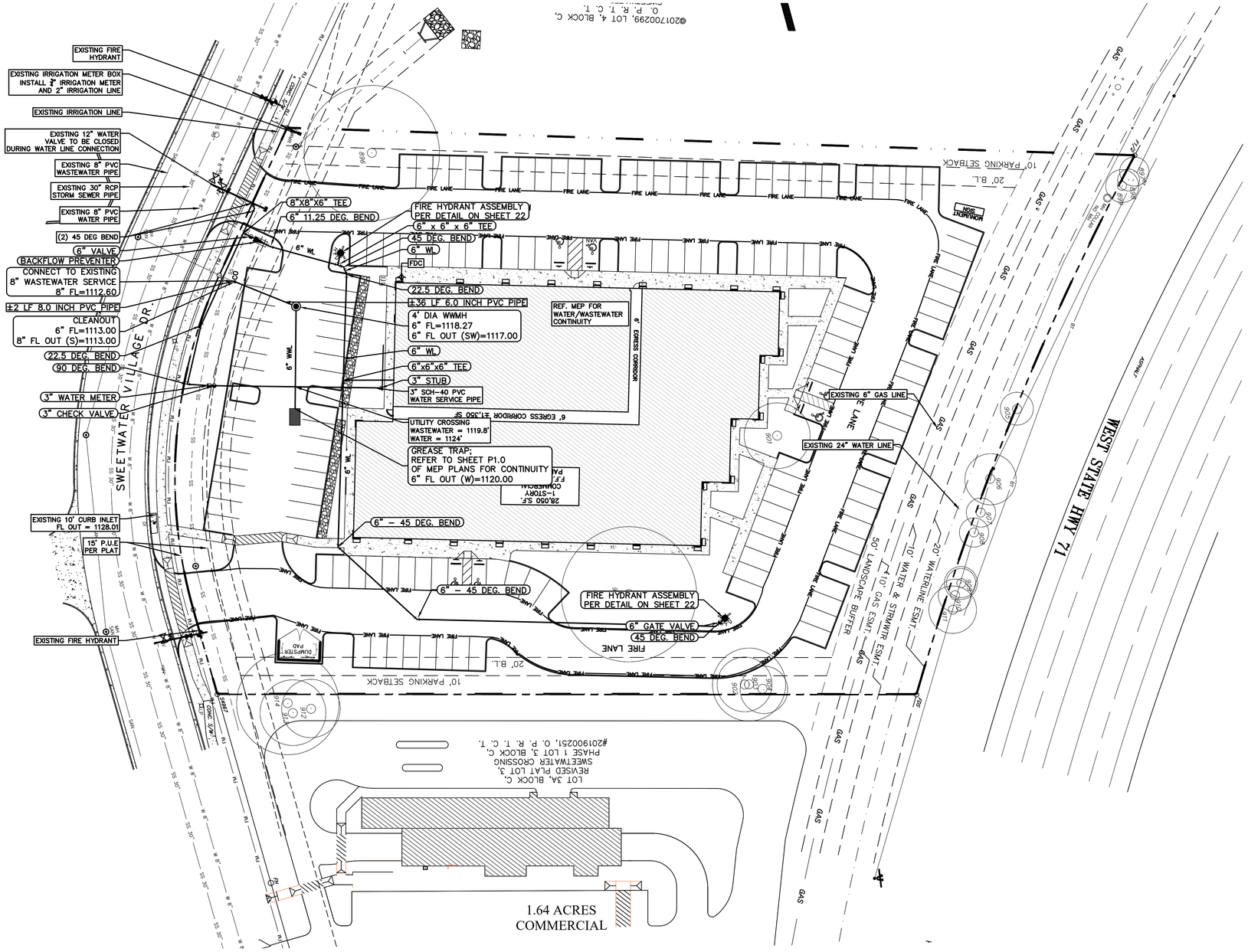

SPECIAL NOTE:
1. ANY WORK COMMENCED PRIOR TO THE ISSUANCE OF CITY BUILDING PERMIT WITH PUBLIC WORKS APPROVALS WILL BE AT THE SOLE RISK OF THE CONTRACTOR.

30 0 15 30 60
1" = 30'

LEGEND

EXISTING	PROPOSED	DESCRIPTION
		PROPERTY LINE/ (R.O.W.) LINE
(XXX)		RECORD INFORMATION
		LIGHT POLE
		GROUND LIGHT
		POWER POLE
		DOWN GUY
TMH		TELEPHONE MANHOLE
WTRMH		WATER MANHOLE
		WATER LINE MARKER
SPCB		SPRINKLER CONTROL BOX
	T	TRANSFORMER (SIZE VARIES)
		FIRE HYDRANT
		WATER VALVE
		WATER METER
		WATER METER VAULT (SIZE VARIES)
		ELECTRIC BOX
		ELECTRIC METER
		GAS METER
		GAS VALVE
OE	OE	OVERHEAD ELECTRIC
WWMH		WASTEWATER MANHOLE (SIZE VARIES)
SSMH		STORMSEWER MANHOLE (SIZE VARIES)
TMH	TMH	TELEPHONE MANHOLE (SIZE VARIES)
CO	CO	WASTEWATER CLEANOUT
		CHAIN LINK FENCE
		CURB & GUTTER
		EDGE OF PAVEMENT
		FIRE LANE DESIGNATION
		HANDICAP ACCESS ROUTE
		CONCRETE SIDEWALKS
		SIGN
		WHEELSTOP
	FFE	FINISH FLOOR ELEVATION
		HANDICAP SPACE
		BIKE PARKING
		BARRICADE

NOTES:

1. ALL WASTEWATER LINES SHALL BE SDR-26 PVC.
2. ALL FIRE HYDRANT LEADS TO BE DUCTILE IRON CL 350.
3. A TRENCH SAFETY PLAN MUST BE SUBMITTED TO THE ENGINEER AND THE CITY OF AUSTIN PRIOR TO BEGINNING TRENCHING ACTIVITIES.
4. ALL JOINT RESTRAINTS TO BE MECHANICAL BLOCKING, THRUST BLOCKING IS NOT ALLOWED..
5. ALL VALVE CAPS AND MANHOLES OUTSIDE OF PAVEMENT SHALL BE RAISED AND INDICATED WITH A LOCATED SIGN.
6. EXISTING WATER MAIN SHALL BE TESTED WITH A PRESSURE TEST AND TWO BACTERIAL TESTS. ALL TEST SHALL PASS FOR EXISTING LINE TO REMAIN. IF EITHER TEST FAILS, NEW WATERLINE SHALL BE INSTALLED.
7. ALL FIRE HYDRANTS SHALL MAINTAIN A MINIMUM 3' CLEAR AROUND THE CIRCUMFERENCE AT ALL TIME.
8. CONTRACTOR TO PROVIDE PUBLIC ACCESS TO LOCAL BUSINESS AT ALL TIMES. COORDINATE CONSTRUCTION w/ BUSINESS OWNER 48 HOUR PRIOR TO BEGIN WORK.
9. ANY DAMAGE TO EXISTING SIDEWALK SHALL BE REPAIRED BY THE CONTRACTOR AT HIS OWN COST. SEE SIDEWALK DETAILS. ALL DISTURBED AREAS SHALL BE RE-VEGETATED AND MAINTAINED BY THE CONTRACTOR TO ENSURE HEALTH GROWTH DURING CONSTRUCTION PERIOD.
10. PUBLIC WASTEWATER LINE SHALL MEET TCEQ, CITY OF AUSTIN AND LAZY NINE MUD STANDARDS.
11. CONTRACTOR TO COORDINATE WITH NEIGHBORS BEFORE WATER SHUT-OFF.

PROJECT:
SWEETWATER LOT 3B

LOCATION:
16620 SWEETWATER VILLAGE DRIVE
BEE CAVE (ETJ)
TEXAS 78669

AES Professional Services LLC

project team

CIVIL ENGINEER:
AES Engineering Consultant
Ahmed El Seweify P.E.
2514 PRESERVE TRAIL, CEDAR PARK, TX 78613
Ph. (512) 785-9034
email: contact@aes-engs.com
Texas Firm F-22721

Owner Representative:
DORADO DEVELOPMENT
CONTACT: David Cummings
p 210.732.5335
e david@doradodev.com

Architect:
VILLA PARK ARCHITECTURE
CONTACT: MARK NEVILLE
p 210.384.8900
e mark@villapark.sa.com

GEOTECHNICAL ENGINEER
ROCK ENGINEERING & TESTING
10856 VANDALE ST. SAN ANTONIO TEXAS 78216
(210) 495-8000
WWW.ROCKTESTING.COM

SURVEY:
DELTA LAND SURVEYING
14900 AVERY RANCH BLVD. STE C200
AUSTIN, TX 78717
512-781-9800

2025-11-12

STATE OF TEXAS
AHMED EL SEWEIFY
141828
LICENSED PROFESSIONAL ENGINEER

Ahmed El Seweify

Texas 811
Know what's below. Call before you dig.

REVISION	DATE	ISSUE TITLE

DRAWING TITLE:
WATER & WASTEWATER PLAN

PROJECT NO:	DRAWN & CHECKED BY:
10-1072	AES
DATE: 2025-11-12	SCALE: 1:30

SHEET NUMBER:
20 of 29

10/14/2025 1:18:39 AM

G:\My Drive\AES ENGINEERING\10-1072 Sweetwater\cad\WASTEWATER PLAN.dwg

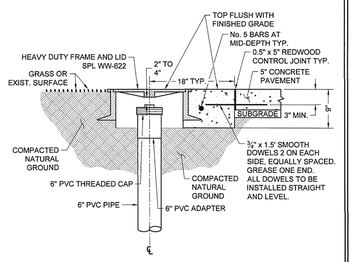

*** CLEAN-OUTS MAY NOT BE PLACED IN PAVED AREAS - I.E. SIDEWALKS, DRIVEWAYS, OR PARKING LOTS, AND MUST BE LOCATED A MINIMUM OF 6' FROM ALL PAVED AREAS.**

NOTES:

1. SUB-GRADE SHALL BE COMPACTED AS PER STD. SPEC. 201S, SUB-GRADE PREPARATION.
2. REINFORCING STEEL SHALL MEET ITEM 406S, REINFORCING STEEL.
3. CONCRETE SHALL MEET ITEM 403S CLASS "A".
4. ALL PVC SHALL BE SDR 26.

CLEAN-OUT FRAME AND LID

CITY OF AUSTIN AUSTIN WATER	WASTEWATER CLEAN-OUT FRAME AND LID	
Kathi L. Flowers 05/18/2016 DATE	THE ARCHITECT/ENGINEER ASSUMES RESPONSIBILITY FOR APPROPRIATE USE OF THIS STANDARD.	STANDARD NO. 520-AW-03 1 OF 2

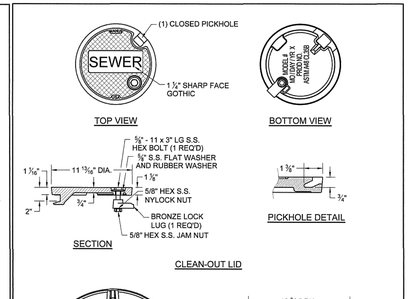

CLEAN-OUT LID

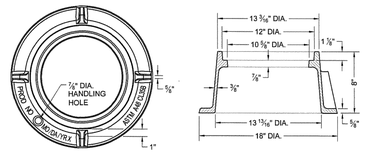

CLEAN-OUT FRAME

CITY OF AUSTIN AUSTIN WATER	WASTEWATER CLEAN-OUT FRAME AND LID	
Kathi L. Flowers 05/18/2016 DATE	THE ARCHITECT/ENGINEER ASSUMES RESPONSIBILITY FOR APPROPRIATE USE OF THIS STANDARD.	STANDARD NO. 520-AW-03 2 OF 2

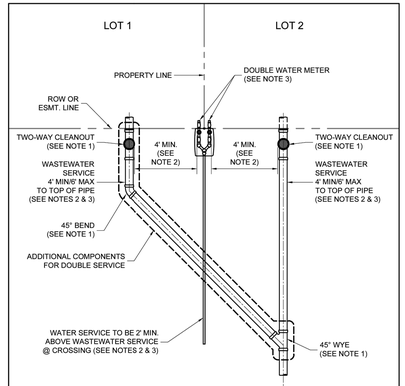

NOTES:

1. WASTEWATER SERVICE FITTINGS SHALL BE APPROVED FOR USE WITH THIS DETAIL AS LISTED ON SPL WW-227B-1.
2. UTILIZE EXISTING ALIGNMENT FOR REPAIR OR REPLACEMENT OF EXISTING WATER AND WASTEWATER SERVICES. WATER SERVICE SHALL BE INSTALLED AT A SHALLOWER GRADE THAN WASTEWATER SERVICE.
3. SEE STANDARD DETAIL 520-AW-01B FOR WATER SERVICE INSTALLATION AND 520-AW-01C FOR WASTEWATER SERVICE INSTALLATION.

CITY OF AUSTIN AUSTIN WATER	WATER / WASTEWATER SERVICE ON COMMON LOT LINE	
RECORD COPY SIGNED *JEFF A. KYLE* 11/07/2018 ADOPTED	THE ARCHITECT/ENGINEER ASSUMES RESPONSIBILITY FOR APPROPRIATE USE OF THIS STANDARD.	STANDARD NO. 520-AW-01A 1 OF 1

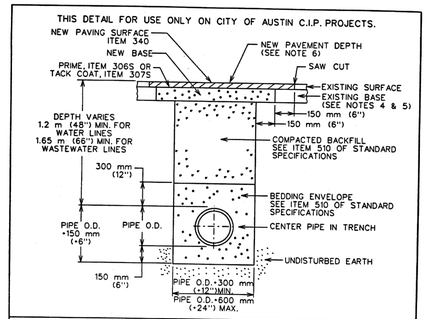

NOTES:

1. THE EXISTING PAVING SURFACE SHALL BE SAW CUT IN A STRAIGHT LINE A MINIMUM OF 300 mm (12") WIDER THAN THE UNDISTURBED SIDES OF THE TRENCH, SYMETRICAL ABOUT THE CENTER LINE OF THE EXCAVATION.
2. ANY CONCRETE PAVING SHALL BE SAW CUT 150 mm (6") WIDER THAN UNDISTURBED SIDES OF EXCAVATION.
3. IF EXCAVATION AREA IS OPEN FOR TEMPORARY PUBLIC USE, THE SURFACE SHALL BE MAINTAINED LEVEL WITH ADJACENT RIDING SURFACE WITH COLD MIX OR TEMPORARY HOT MIX ASPHALTIC CONCRETE.
4. ROAD BASE AND SURFACE MATERIALS IN THE TRENCH CUT SHALL BE REPLACED IN KIND OF EQUAL THICKNESS, OR MINIMUM BASE THICKNESS OF 250 mm (10"), WHICHEVER IS GREATER.
5. ALL DAMAGED AREAS OF PAVEMENT OUTSIDE THE TRENCH CUT SHALL BE REMOVED AND REPLACED WITH MINIMUM OF 200 mm (8") OF BASE OR MATCH EXISTING THICKNESS, WHICHEVER IS GREATER.
6. SURFACE PAVEMENT SHALL BE OF THE KIND AND THICKNESS AS EXISTING, OR MINIMUM 50 mm (2"), WHICHEVER IS GREATER.

CITY OF AUSTIN WATER AND WASTEWATER UTILITY	TYPICAL TRENCH WITH PAVED SURFACE	
Sean Bailey P.E. 8/19/02 ADOPTED	THE ARCHITECT/ENGINEER ASSUMES RESPONSIBILITY FOR APPROPRIATE USE OF THIS STANDARD.	STANDARD NO. 510S-3

REFERENCES:

1. UTILITY CRITERIA MANUAL SECTION 3.4.3, "FINAL DESIGN"
2. STANDARD SPECIFICATION MANUAL ITEM 510,
   SECTION 510.2(6), "SELECT BACKFILL OR BORROW";
   SECTION 510.3(6), "TRENCH DEPTH AND DEPTH OF COVER";
   SECTION 510.3(14), "PIPE BEDDING ENVELOPE"

CITY OF AUSTIN DEPARTMENT OF PUBLIC WORKS	TYPICAL TRENCH DETAIL WITH UNFINISHED SURFACE	
Bice Rhodes 3/13/06 ADOPTED	THE ARCHITECT/ENGINEER ASSUMES RESPONSIBILITY FOR APPROPRIATE USE OF THIS STANDARD.	STANDARD NO. 510S-5

CITY OF AUSTIN AUSTIN WATER	WATER SERVICE & WASTEWATER SERVICE CONNECTION	
Kathi L. Flowers 05/18/2016 ADOPTED	THE ARCHITECT/ENGINEER ASSUMES RESPONSIBILITY FOR APPROPRIATE USE OF THIS STANDARD.	STANDARD NO. 520-AW-01 1 OF 4

NOTES:

1. DURING SUBDIVISION CONSTRUCTION UTILITY CONTRACTOR INSTALLS WASTEWATER CONNECTION TO MAIN, A STUB, HORIZONTAL WYE FOR DOUBLE SERVICES, 6" SERVICE BRANCH WITH 2-WAY-CLEANOUT(S) AND RISER, FRAME, AND COVER CLEANOUT(S) PLUGGED AT PROPERTY LINE OR EASEMENT LINE END. ALL WASTEWATER PIPING SHALL HAVE ELASTOMERIC GASKET TYPE JOINTS AND SLOPE DOWNWARD TO MAIN 1% MIN. TO 45° MAX. DEPTH OF SERVICE AT PROPERTY LINE WILL BE SHOWN ON PLANS BY ENGINEER IF GREATER THAN 4', OTHERWISE THE INSTALLED DEPTH WILL BE 4' MIN. AND 6' MAX. AT PROPERTY LINE. IF WASTEWATER SERVICE LINE TO MAIN REQUIRES DEFLECTION EXCEEDING 45°, SEE SHEET 3 OF 4. UTILITY CONTRACTOR ALSO INSTALLS WATER CONNECTION TO MAIN WATER PIPE, FITTINGS AND VALVES INCLUDING STOP VALVE. REFER TO DETAIL 520-AW-02.
2. PIPING AND TUBING IN STREET RIGHT-OF-WAY AND IN EASEMENT AREA SHALL BE BEDDED IN GRANULAR MATERIALS AS REQUIRED BY CITY OF AUSTIN STANDARD SPECIFICATION 510.3 (14); MATERIALS SHALL BE AS SPECIFIED IN 510.2 (2)(A) AND (3)(B); BACKFILL ABOVE THE GRANULAR BEDDING SHALL BE AS REQUIRED BY SECTION 510.3 (25). SERVICE LINES IN THESE AREAS SHALL HAVE A MIN. COVER BELOW FINAL STREET GRADE OF 42".
3. NO METER BOX, BALL VALVE OR CLEAN-OUT SHALL BE SET IN SIDEWALK OR DRIVEWAY AREA AND SHALL BE A MINIMUM OF 6' FROM ALL PAVED AREAS.
4. PLUMBER SHALL REMOVE PLUG AND CONNECT TO 2-WAY CLEANOUT. NO CONNECTION TO CLEANOUT STACK IS ALLOWED.

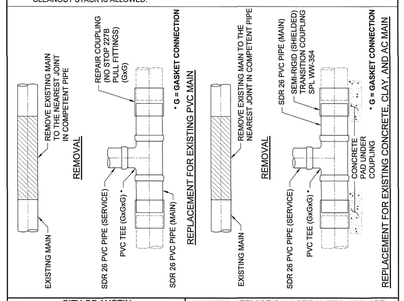

CITY OF AUSTIN AUSTIN WATER	WATER SERVICE & WASTEWATER SERVICE CONNECTION	
Kathi L. Flowers 05/18/2016 ADOPTED	THE ARCHITECT/ENGINEER ASSUMES RESPONSIBILITY FOR APPROPRIATE USE OF THIS STANDARD.	STANDARD NO. 520-AW-01 2 OF 4

DEEP SERVICE CONNECTION

CITY OF AUSTIN AUSTIN WATER	WATER SERVICE & WASTEWATER SERVICE CONNECTION	
Kathi L. Flowers 05/18/2016 ADOPTED	THE ARCHITECT/ENGINEER ASSUMES RESPONSIBILITY FOR APPROPRIATE USE OF THIS STANDARD.	STANDARD NO. 520-AW-01 3 OF 4

INSTALLATION IN LINED PIPE:

1. MARK LOCATION OF TAP.
2. BREAK & REMOVE HOST PIPE SO THAT OPENING IS AT LEAST 2" BUT NO MORE THAN 3" WIDER THAN DIAMETER OF THE SERVICE ADAPTOR.
3. DO NOT DAMAGE LINER.
4. CORE HOLE THROUGH LINER USING ADAPTOR MANUFACTURER RECOMMENDED BIT.
5. INSTALL SERVICE ADAPTOR.
6. HOLES CUT IN HOST PIPE SHALL BE PACKED WITH NON-SHRINK GROUT (ASTM C1107 GRADE). SEE DETAIL "B"

NOTES:

1. USE ONLY TO TAP EXISTING LINED PIPE.
2. SEE APPROPRIATE STD. FOR SERVICE LINE INFORMATION.
3. THE EDGE OF THE CORE HOLE MUST BE AT LEAST 3" FROM THE ENDS OF THE PIPE, ANY OTHER CORE SERVICE CONNECTIONS, AND ANY FITTINGS.
4. FOR DEEP SERVICE APPLICATIONS SEE SHEET 3 OF 4, EXCEPT SUBSTITUTE A CORED HOLE, AND SERVICE ADAPTOR FOR THE TEE OR WYE.
5. SERVICE CONNECTIONS TO MANHOLES MUST BE MADE USING A PIPE-TO-MANHOLE CONNECTOR WHICH LIMITS THE PIPE SLOPE INTO THE MANHOLE TO 12% MAX.

6" WASTEWATER CONNECTION TO EXISTING LINED MAIN

CITY OF AUSTIN AUSTIN WATER	WATER SERVICE & WASTEWATER SERVICE CONNECTION	
Kathi L. Flowers 05/18/2016 ADOPTED	THE ARCHITECT/ENGINEER ASSUMES RESPONSIBILITY FOR APPROPRIATE USE OF THIS STANDARD.	STANDARD NO. 520-AW-01 4 OF 4

PROJECT:

SWEETWATER LOT 3B

LOCATION:

16620 SWEETWATER
VILLAGE DRIVE
BEE CAVE (ETJ)
TEXAS 78669

AES Professional Services LLC

project team

CIVIL ENGINEER:
AES Engineering Consultant
Ahmed El Seweify P.E.
2514 PRESERVE TRAIL, CEDAR PARK, TX 78613
Ph. (512) 785-9034
email: contact@aes-engs.com
Texas Firm F-22721

Owner Representative:
DORADO DEVELOPMENT
CONTACT: David Cummings
p 210.732.5335
e david@doradodev.com

Architect:
VILLA PARK ARCHITECTURE
CONTACT: MARK NEVILLE
p 210.384.8900
e mark@villapark.sa.com

GEOTECHNICAL ENGINEER
ROCK ENGINEERING & TESTING
10856 VANDALE ST. SAN ANTONIO TEXAS 78216
(210) 495-8000
WWW.ROCKTESTING.COM

SURVEY:
DELTA LAND SURVEYING
14900 AVERY RANCH BLVD. STE C200
AUSTIN, TX 78717
512-781-9800

2025-11-12

STATE OF TEXAS
AHMED EL SEWEIFY
141828
LICENSED PROFESSIONAL ENGINEER

Ahmed El Seweify

Texas 811
Know what's below. Call before you dig.

REVISION	DATE	ISSUE TITLE

DRAWING TITLE:

WATER & WASTEWATER DETAILS 1

PROJECT NO:	DRAWN & CHECKED BY:
10-1072	AES
DATE:	SCALE:
2025-11-12	NTS

SHEET NUMBER:

21 of 29

10/14/2025 1:18:44 AM

G:\My Drive\AES ENGINEERING\10-1072 Sweetwater\cad\15 WASTEWATER DETAILS.dwg

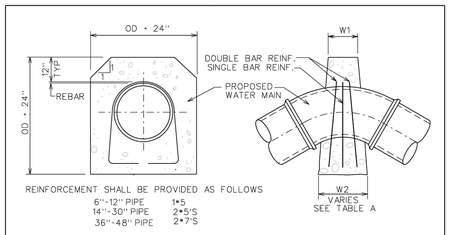

REINFORCEMENT SHALL BE PROVIDED AS FOLLOWS

6"-12" PIPE	1•5
14"-30" PIPE	2•5'S
36"-48" PIPE	2•7'S

VERTICAL DOWN BEND

TABLE A
UPWARD THRUST GRAVITY BLOCKS

PIPE DIA.	MIN. TOP WIDTH W1	ANGLE (degrees)	BOTTOM WIDTH-W2 (in)
6"	6"	0-5	NOTE 2
		5-15	24
		15-25	48
		> 25	NOTE 1
8"	6"	0-5	NOTE 2
		5-9	30
		9-15	36
		>15	NOTE 1
12"	6"	0-5	NOTE 2
		5-15	48
		>15	NOTE 1
16"	12"	0-5	NOTE 2
		5-10	60
		10-15	96
		> 15	NOTE 1
24" THRU 36" DIA.		>5.0	NOTE 1
42" THRU 48" DIA.		>3.0	NOTE 1

NOTES:

1- FOR ANGLES GREATER THAN THOSE INDICATED RESTRAINED JOINTS SHALL BE INSTALLED

2- FOR JOINT DEFLECTIONS LESS THAN 5 DEGREES, NO HORIZONTAL OR VERTICAL THRUST RESTRAINT IS REQUIRED FOR PIPES LESS THAN 42" IN DIAMETER.

THRUST BLOCK DESIGN AS FOLLOWS
A. PRESSURE OF 150 P.S.I. (ACTUAL IF HIGHER) + 50 % SURGE ALLOWANCE
B. MAXIMUM SOIL BEARING SEE TABLE BELOW

SOIL TYPES	PRESSURE
LOOSE OR SPONGY SOIL	1500 Lb/Sq.Ft.
UNDISTURBED SOIL, CALICHE	2000 Lb/Sq.Ft.
LIMESTONE ROCK	4000 Lb/Sq.Ft.

CITY OF AUSTIN WATER AND WASTEWATER UTILITY		CONCRETE THRUST BLOCKING	STANDARD NO.
RECORD COPY SIGNED BY JAMES E. THOMPSON	2/11/86 ADOPTED	THE ARCHITECT/ENGINEER ASSUMES RESPONSIBILITY FOR APPROPRIATE USE OF THIS STANDARD.	510-6 1 OF 2

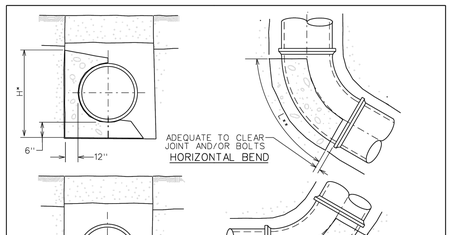

• THE DIMENSION FOR "H" MUST BE GREATER THAN DIAMETER OF THE PIPE
•• LENGTH "L" ALONG THE BEND MUST BE GREATER THAN "H" AND LESS THAN 2 TIMES "H"

CITY OF AUSTIN WATER AND WASTEWATER UTILITY		CONCRETE THRUST BLOCKING	STANDARD NO.
RECORD COPY SIGNED BY JAMES E. THOMPSON	2/11/86 ADOPTED	THE ARCHITECT/ENGINEER ASSUMES RESPONSIBILITY FOR APPROPRIATE USE OF THIS STANDARD.	510-6 2 OF 2

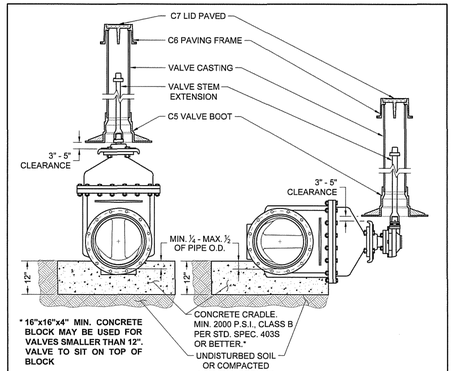

* "16"x16"x4" MIN. CONCRETE BLOCK MAY BE USED FOR VALVES SMALLER THAN 12". VALVE TO SIT ON TOP OF BLOCK

VERTICAL VALVE

HORIZONTAL VALVE
ONLY TO BE USED WHEN CALLED OUT ON THE DRAWINGS.

NOTES:

1. WELD SOCKET 2⅛" x 2" DEEP TO 1" SCH. 40 CARBON STEEL ROUND STEM EXTENSION, FITTED ON OPERATING NUT. [SCH. 80 FOR LENGTHS OVER 10']
2. VALVE CASTING SHALL BE 6" DI PIPE WITH BELL OR COLLAR CENTERED OVER VALVE BOOT.
3. NUT AT TOP OF VALVE EXTENSION ROD SHALL BE SQUARE 2" LONG WELDED TO TOP OF ROD.
4. VALVE STEM EXTENSIONS ARE REQUIRED ON ALL VALVES THAT EXCEED 3' DEEP FROM FINISHED GRADE. VALVE EXTENSIONS SHALL BE PLACED SUCH THAT THE EXTENSION NUT IS BETWEEN 12" AND 18" FROM FINISHED GRADE.

RECLAIMED WATER: ALL RECLAIMED PVC PIPE SHALL BE MANUFACTURED PURPLE PIPE. HDPE PIPE SHALL BE MANUFACTURED WITH PURPLE STRIPES. ALL OTHER PIPE AND APPURTENANCES SHALL BE MANUFACTURED PURPLE IF AVAILABLE. ALL PIPE AND FITTINGS THAT ARE NOT AVAILABLE FROM THE MANUFACTURER IN PURPLE SHALL BE PAINTED PURPLE PER SPL WW-3C. ALL BURIED DI AND CI PIPE AND FITTINGS SHALL ALSO BE WRAPPED IN PURPLE POLYETHYLENE PER SPL WW-27D. ALL COVERS SHALL HAVE "RECLAIMED WATER" CAST INTO THEM.

CITY OF AUSTIN AUSTIN WATER		TYPICAL GATE VALVE 4" - 16"	STANDARD NO.
Kathi L. Flowers	05/18/2016 ADOPTED	THE ARCHITECT/ENGINEER ASSUMES RESPONSIBILITY FOR APPROPRIATE USE OF THIS STANDARD.	511-AW-01 1 OF 4

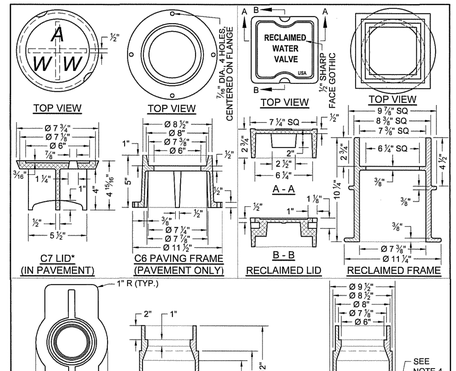

NOTES:

1. MATERIAL SHALL BE GRAY CAST IRON, ASTM A48, GRADE 30B.
2. THE MANUFACTURER'S IDENTIFICATION AND CASTING NUMBER, AND THE COUNTRY WHERE CAST, SHALL BE DISTINCTLY CAST ONTO EACH LID, FRAME, COLLAR AND BASE.
3. DRAFT AND SHRINKAGE ALLOWANCE SHALL BE IN ACCORDANCE WITH NORMAL FOUNDRY PRACTICE.
4. CASTING FINISH BY MANUFACTURER SHALL INCLUDE REMOVAL OF FINS AND FLASHING, AND PAINT WITH BLACK ASPHALT COATING.

WEIGHTS:

C7 LID: 13 LBS
RECLAIMED LID: 15 LBS
C6 FRAME: 23 LBS
RECLAIMED FRAME: 33 LBS
C5 BASE: 78 LBS

* LETTERING SHALL BE 1 ½"
2 PICK BAR SLOTS REQUIRED

CITY OF AUSTIN AUSTIN WATER		TYPICAL GATE VALVE 4" - 16"	STANDARD NO.
Kathi L. Flowers	05/18/2016 ADOPTED	THE ARCHITECT/ENGINEER ASSUMES RESPONSIBILITY FOR APPROPRIATE USE OF THIS STANDARD.	511-AW-01 2 OF 4

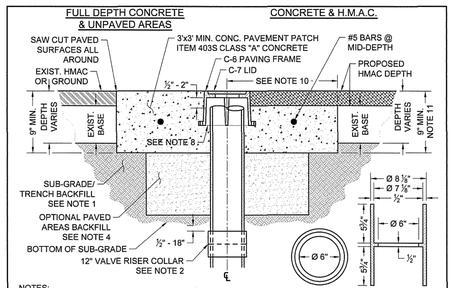

SECTION A - A

TOP VIEW

COLLAR *

12" VALVE RISER COLLAR
* 12" COLLAR: 39 LBS

NOTES:

1. SUB-GRADE/TRENCH BACKFILL SHALL BE COMPACTED AS PER ITEM 201S, SUB-GRADE PREPARATION.
2. TO ADJUST VALVE CASTINGS TO FINAL GRADE, REMOVE RISER PIPE BELOW SUB-GRADE AND INSTALL APPROPRIATE LENGTH OF NEW RISER PIPE TO ACHIEVE FINAL GRADE. CONNECT THE TWO PIECES OF RISER PIPE WITH A 6" COLLAR MIN. 12" LENGTH APPROXIMATELY CENTERED ON THE JOINT WITH THE TOP OF SLEEVE LOCATED ½" - 18" BELOW SUB-GRADE. THE INSIDE "LIP" OF COLLAR TO BE PAINTED WITH FLUORESCENT WHITE PAINT OR COVERED WITH FLUORESCENT WHITE TAPE. ALTERNATE: FOR OPTIONAL SINGLE PIECE RISER INSTALLATION SEE SHEET 4 OF 4.
3. CLEAN VALVE BOX OF ALL DEBRIS DOWN TO THE NUT OF THE VALVE; NUT SHALL OPERATE WITH NO OBSTRUCTION.
4. WHERE CASTINGS TO BE REMOVED REQUIRE EXCAVATION GREATER THAN 20" DEEP, CONTRACTOR MAY ELECT TO FILL EXCAVATION WITH CONTROLLED LOW STRENGTH MATERIAL (SPEC. ITEM 402S) TO THE UNDERSIDE OF THE CONCRETE. PAVEMENT PATCH IN LIEU OF COMPACTED BACKFILL.
5. REINFORCING STEEL SHALL MEET SPEC. ITEM 406S.7.
6. NO MORE THAN 2 SECTIONS OF PIPE SHALL BE USED FROM VALVE TO FINAL GRADE.
7. BELL AND SPIGOT IS ACCEPTABLE FOR DEPTH OVER 18'.

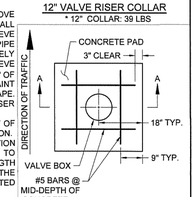

PLAN VIEW

CITY OF AUSTIN AUSTIN WATER		TYPICAL GATE VALVE 4" - 16"	STANDARD NO.
Kathi L. Flowers	05/18/2016 ADOPTED	THE ARCHITECT/ENGINEER ASSUMES RESPONSIBILITY FOR APPROPRIATE USE OF THIS STANDARD.	511-AW-01 3 OF 4

NOTES (CONT):

8. PAVING FRAME SHALL BE FLUSH WITH THE CONC. PAD AND PLACED ½" - 2" ABOVE RISER PIPE (FRAME SHALL NOT REST ON RISER.)
9. IN UNPAVED AREAS, INSTALL ONE DELINEATOR STAKE IMMEDIATELY ADJACENT TO THE EDGE OF THE CONCRETE PAD. DELINEATOR SHALL BE BLUE FOR POTABLE WATER AND PURPLE FOR RECLAIMED WATER AND SHALL EXTEND AT LEAST 60" ABOVE GROUND. DELINEATORS SHALL HAVE 2" WIDE, WHITE IN COLOR, TYPE I REFLECTIVE TAPE MOUNTED DIAGONALLY AT 12" SPACING ON BOTH SIDES.
10. VALVE SHALL TYPICALLY BE CENTERED IN CONCRETE DIAMOND BUT MAY BE OFFSET WITH A MIN. OF 12" FROM CENTER OF VALVE LID TO EDGE OF CONCRETE IN ALL DIRECTIONS.
11. MIN. TOTAL DEPTH OF ASPHALT PLUS CONC. IS 9" AND MIN. DEPTH OF CONC. PAD SHALL BE 5"

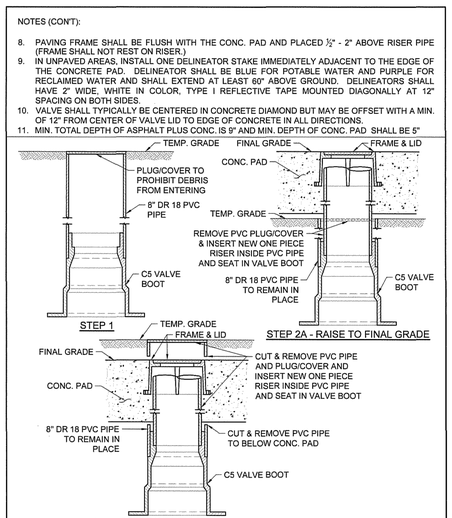

OPTIONAL ONE PIECE VALVE CASTING INSTALLATION

CITY OF AUSTIN AUSTIN WATER		TYPICAL GATE VALVE 4" - 16"	STANDARD NO.
Kathi L. Flowers	05/18/2016 ADOPTED	THE ARCHITECT/ENGINEER ASSUMES RESPONSIBILITY FOR APPROPRIATE USE OF THIS STANDARD.	511-AW-01 4 OF 4

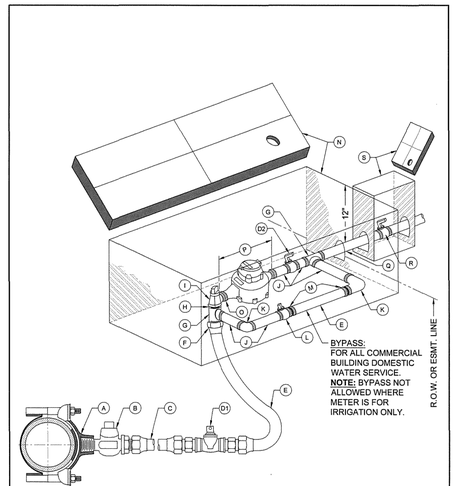

CITY OF AUSTIN AUSTIN WATER		1 ½" - 2" METER INSTALLATION SHOWING OPTIONAL BYPASS	STANDARD NO.
Kathi L. Flowers	05/18/2016 ADOPTED	THE ARCHITECT/ENGINEER ASSUMES RESPONSIBILITY FOR APPROPRIATE USE OF THIS STANDARD.	520-AW-04 1 OF 2

MATERIALS LIST:

A. 2" SERVICE CLAMP
B. 2" CORPORATION STOP MALE THREAD INLET BY COMPRESSION OUTLET
C. 2" COPPER WATER SERVICE TUBING EXTENDED BEYOND PAVEMENT
D1. 2" BALL VALVE, SPL WW-27S
D2. 2" BALL VALVE, SPL WW-27S
E. 2" COPPER SERVICE TUBING
F. 2" BRASS COUPLING - COMPRESSION TO MALE IPT
G. 2" BRASS TEE
H. 2" BRASS CLOSE-NIPPLE
I. 2" ANGLE METER STOP; SERVICE TUBING INLET x FLANGED OUTLET
J. 2" BRASS NIPPLE
K. 2" BRASS ELBOW
L. 2" LOCKABLE CURB STOP - FEMALE IPT INLET BY COMPRESSION OUTLET
M. 2" BRASS COUPLING - SERVICE TUBING TO MALE IPT
N. RECTANGULAR METER BOX AND COVER, SPL WW-145A
O. BRASS ADAPTER (2" x 1 ½") FOR 1 ½" METER ONLY
P. WATER METER. LENGTH 13", (PURCHASED FROM AUSTIN WATER)
Q. 2" COPPER SERVICE TUBING (PRIVATE PLUMBING PER CODE)
R. CUSTOMER CUT-OFF VALVE
S. CUSTOMER VALVE BOX AND LID

NOTES:

1. SERVICE CLAMP SHALL BE WRAPPED COMPLETELY WITH 8 MIL. POLYETHYLENE FILM.
2. BRANCH CONNECTIONS AND ALL ANGLE METER STOPS MUST BE INSTALLED PRIOR TO ANY METER INSTALLATION.
3. TOP OF BOXES SHOULD BE 1" ABOVE GROUND.
4. PIPING AND TUBING IN STREET RIGHT-OF-WAY SHALL BE BEDDED IN GRANULAR MATERIALS AS REQUIRED BY SECTION 510.3 (14) OF THE CITY OF AUSTIN STANDARD SPECIFICATIONS; BACKFILL ABOVE GRANULAR BEDDING AS REQUIRED BY SECTION 510.3 (25).
5. BOX MUST BE BEHIND CURB NEXT TO PROPERTY LINE OR EASEMENT AND OUT OF VEHICULAR TRAFFIC AREA AND SIDEWALK.
6. BALL VALVE "D1" SHALL NOT BE LOCATED UNDER SIDEWALK, CURB, OR PAVEMENT, AND NOT BE LOCATED MORE THAN 24" HORIZONTALLY FROM METER BOX OR 36" BELOW FINAL GRADE.
7. COPPER SERVICE SHALL BE COPPER TUBING SIZE ANNEALED SEAMLESS TYPE "K" MEETING ASTM B88 WITH NO SWEAT OR SOLDERED JOINTS.

RECLAIMED WATER:

FOR RECLAIMED WATER SERVICES AND METERS, ALL RECLAIMED TUBING SHALL BE MANUFACTURED PURPLE TUBING. ALL OTHER TUBING AND APPURTENANCES SHALL BE MANUFACTURED PURPLE IF AVAILABLE. ALL TUBING AND FITTINGS THAT ARE NOT AVAILABLE FROM THE MANUFACTURER IN PURPLE SHALL BE PAINTED PURPLE PER SPL WW-3C. ALL BURIED DI AND CI PIPE AND FITTINGS SHALL ALSO BE WRAPPED IN PURPLE POLYETHYLENE PER SPL WW-27D. ALL COVERS SHALL HAVE "RECLAIMED WATER" CAST INTO THEM.

CITY OF AUSTIN AUSTIN WATER		1 ½" - 2" METER INSTALLATION SHOWING OPTIONAL BYPASS	STANDARD NO.
Kathi L. Flowers	05/18/2016 ADOPTED	THE ARCHITECT/ENGINEER ASSUMES RESPONSIBILITY FOR APPROPRIATE USE OF THIS STANDARD.	520-AW-04 2 OF 2

PROJECT:

SWEETWATER LOT 3B

LOCATION:

16620 SWEETWATER
VILLAGE DRIVE
BEE CAVE (ETJ)
TEXAS 78669

AES Professional Services LLC

project team

CIVIL ENGINEER:
AES Engineering Consultant
Ahmed El Seweify P.E.
2514 PRESERVE TRAIL, CEDAR PARK, TX 78613
Ph. (512) 785-9034
email: contact@aes-engs.com
Texas Firm F-22721

Owner Representative:
DORADO DEVELOPMENT
CONTACT: David Cummings
p 210.732.5335
e david@doradodev.com

Architect:
VILLA PARK ARCHITECTURE
CONTACT: MARK NEVILLE
p 210.384.8900
e mark@villapark.sa.com

GEOTECHNICAL ENGINEER
ROCK ENGINEERING & TESTING
10856 VANDALE ST. SAN ANTONIO TEXAS 78216
(210) 495-8000
WWW.ROCKTESTING.COM

SURVEY:
DELTA LAND SURVEYING
14900 AVERY RANCH BLVD. STE C200
AUSTIN, TX 78717
512-781-9800

2025-11-12

STATE OF TEXAS
AHMED EL SEWEIFY
141828
LICENSED PROFESSIONAL ENGINEER

REVISION	DATE	ISSUE TITLE

DRAWING TITLE:

WATER & WASTEWATER DETAILS 2

PROJECT NO:	DRAWN & CHECKED BY:
10-1072	AES
DATE:	SCALE:
2025-11-12	NTS

SHEET NUMBER:

22 of 29

10/14/2025 1:18:57 AM

G:\My Drive\AES ENGINEERING\10-1072 Sweetwater\cad\WASTEWATER DETAILS 2.dwg

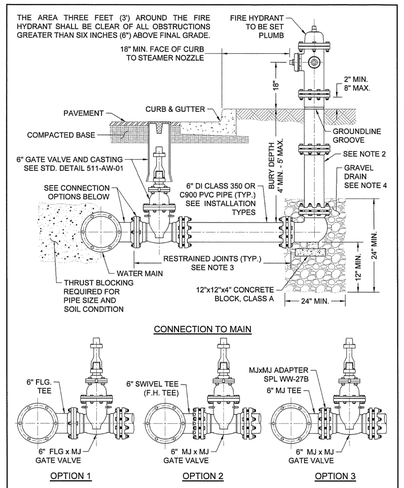

CITY OF AUSTIN AUSTIN WATER	FIRE HYDRANT	
Kathi L. Flowers 05/18/2016 ADOPTED	THE ARCHITECT/ENGINEER ASSUMES RESPONSIBILITY FOR APPROPRIATE USE OF THIS STANDARD.	STANDARD NO. 511-AW-02 1 OF 3

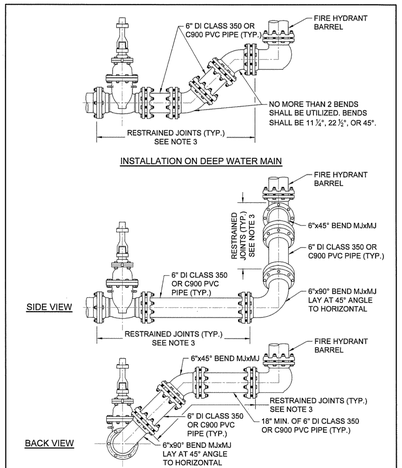

CITY OF AUSTIN AUSTIN WATER	FIRE HYDRANT	
Kathi L. Flowers 05/18/2016 ADOPTED	THE ARCHITECT/ENGINEER ASSUMES RESPONSIBILITY FOR APPROPRIATE USE OF THIS STANDARD.	STANDARD NO. 511-AW-02 2 OF 3

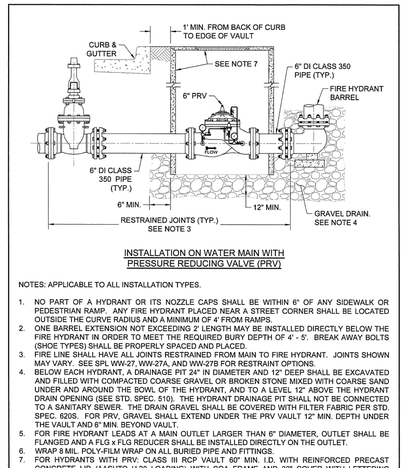

NOTES: APPLICABLE TO ALL INSTALLATION TYPES.

1. NO PART OF A HYDRANT OR ITS NOZZLE CAPS SHALL BE WITHIN 6" OF ANY SIDEWALK OR PEDESTRIAN RAMP. ANY FIRE HYDRANT PLACED NEAR A STREET CORNER SHALL BE LOCATED OUTSIDE THE CURVE RADIUS AND A MINIMUM OF 4' FROM RAMPS.
2. ONE BARREL EXTENSION NOT EXCEEDING 2' LENGTH MAY BE INSTALLED DIRECTLY BELOW THE FIRE HYDRANT IN ORDER TO MEET THE REQUIRED BURY DEPTH OF 4' - 5'. BREAK AWAY BOLTS (SHOE TYPES) SHALL BE PROPERLY SPACED AND PLACED.
3. FIRE LINE SHALL HAVE ALL JOINTS RESTRAINED FROM MAIN TO FIRE HYDRANT. JOINTS SHOWN MAY VARY. SEE SPL WW-27, WW-27A, AND WW-27B FOR RESTRAINT OPTIONS.
4. BELOW EACH HYDRANT, A DRAINAGE PIT 24" IN DIAMETER AND 12" DEEP SHALL BE EXCAVATED AND FILLED WITH COMPACTED COARSE GRAVEL OR BROKEN STONE MIXED WITH COARSE SAND UNDER AND AROUND THE BOWL OF THE HYDRANT, AND TO A LEVEL 12" ABOVE THE HYDRANT DRAIN OPENING (SEE STD. SPEC. 510). THE HYDRANT DRAINAGE PIT SHALL NOT BE CONNECTED TO A SANITARY SEWER. THE DRAIN GRAVEL SHALL BE COVERED WITH FILTER FABRIC PER STD. SPEC. 6205. FOR PRV, GRAVEL SHALL EXTEND UNDER THE PRV VAULT 12" MIN. DEPTH UNDER THE VAULT AND 6" MIN. BEYOND VAULT.
5. FOR FIRE HYDRANT LEADS AT A MAIN OUTLET LARGER THAN 6" DIAMETER, OUTLET SHALL BE FLANGED AND A FLG x FLG REDUCER SHALL BE INSTALLED DIRECTLY ON THE OUTLET.
6. WRAP 8 MIL. POLY-FILM WRAP ON ALL BURIED PIPE AND FITTINGS.
7. FOR HYDRANTS WITH PRV, CLASS III RCP VAULT 60" MIN. I.D. WITH REINFORCED PRECAST CONCRETE LID (AASHTO H-20 LOADING) WITH COA FRAME AND 32" COVER WITH LETTERING MODIFIED FOR WATER.

CITY OF AUSTIN AUSTIN WATER	FIRE HYDRANT	
Kathi L. Flowers 05/18/2016 ADOPTED	THE ARCHITECT/ENGINEER ASSUMES RESPONSIBILITY FOR APPROPRIATE USE OF THIS STANDARD.	STANDARD NO. 511-AW-02 3 OF 3

CITY OF AUSTIN AUSTIN WATER	WATER SERVICE & METER INSTALLATION - 1" & SMALLER METERS	
JEFF A. KYLE 08/16/2019 ADOPTED	THE ARCHITECT/ENGINEER ASSUMES RESPONSIBILITY FOR APPROPRIATE USE OF THIS STANDARD.	STANDARD NO. 520-AW-01B 1 OF 2

MATERIALS LIST:

A. 2" SERVICE CLAMP, SPL WW-264
B. 2" CORPORATION STOP, SPL WW-68
C. 2" HDPE WATER SERVICE TUBING, SPL WW-65
D. 2" BALL VALVE, SPL WW-68
E. SINGLE SERVICE: 2" MIP X 1" COPPER FLARE FITTING, SPL WW-68 OR DOUBLE SERVICE: 2" MIP X 1" COPPER FLARE WYE, SPL WW-68
F. 1" SWIVEL NUT x 1" COMPRESSION 90° BEND, SPL WW-68
G. 1" HDPE WATER SERVICE TUBING, SPL WW-65
H. 1" ANGLE METER STOP, SPL WW-68
I. METER BOX AND LID, SPL WW-145A; FOR DUAL 1" METERS: USE TWO SINGLE METER BOXES

MATERIALS TO BE INSTALLED BY PLUMBER:

J. BRASS METER BUSHING - SIZE AS NEEDED TO CONNECT ANGLE METER STOP TO METER
K. WATER METER PURCHASED FROM AUSTIN WATER
L. BRASS WATER METER COUPLING MALE IPT x SWIVEL COUPLING NUT: ⅝" AND ¾" METERS: 8 ½" LONG x ¾" DIA. 1" METERS: 8 ½" LONG x 1" DIA.
M. PROPERTY OWNER'S CUT OFF VALVE, SPL WW-276
N. PROPERTY OWNER'S CUT OFF VALVE BOX AND LID
O. TEMPORARY METER SPACER (REQUIRED TO ASSURE METER WILL FIT APPROPRIATELY)
P. 1" WOODEN DOWEL (SHOW ADDRESS ON DOWEL USING WATERPROOF MARKER)

NOTES:

1. SERVICE CLAMP SHALL BE WRAPPED COMPLETELY WITH 8 MIL. POLYETHYLENE FILM, SPL WW-27D.
2. BRANCH CONNECTIONS AND ALL ANGLE METER STOPS MUST BE INSTALLED PRIOR TO ANY METER INSTALLATION.
3. TOP OF METER BOXES SHOULD BE 4" ABOVE GROUND.
4. PIPING AND TUBING IN STREET RIGHT-OF-WAY SHALL BE BEDDED IN GRANULAR MATERIALS AS REQUIRED BY SECTION 510.3 (14) OF THE CITY OF AUSTIN STANDARD SPECIFICATIONS; BACKFILL ABOVE GRANULAR BEDDING AS REQUIRED BY SECTION 510.3 (25).
5. METER BOX MUST BE BEHIND CURB NEXT TO PROPERTY LINE OR EASEMENT AND OUT OF VEHICULAR TRAFFIC AREA AND SIDEWALK.
6. BALL VALVE "D" SHALL NOT BE LOCATED UNDER SIDEWALK, CURB, OR PAVEMENT, AND NOT BE LOCATED MORE THAN 36" BELOW FINAL GRADE.
7. METER SIZES TO BE SHOWN ON PLANS.
8. METER BOX CUT OUTS SHALL NOT EXCEED TWO TIMES THE PIPE DIAMETER.
9. INSTALL METALLIC TRACER TAPE, SPL WW-597, MINIMUM 1' ABOVE TUBING FROM SERVICE CLAMP "A" TO BALL VALVE "D".
10. TUBING SHALL BE PLACED IN A STRAIGHT ALIGNMENT AND ALLOWED TO RELAX AND "SNAKE" LOOSELY IN THE TRENCH. TUBING BEHIND CURB AND GUTTER SHALL BE INSTALLED WITH A MINIMUM 2' DEPTH OF COVER.
11. 1" TUBING, WHEN BENT, SHALL HAVE A RADIUS NO SMALLER THAN 3', 2" TUBING, WHEN BENT, SHALL HAVE A RADIUS NO SMALLER THAN 5'. BRASS FITTINGS SHALL NOT BE CONNECTED TO A BENT SECTION OF TUBING.
12. SOLID, TUBULAR STAINLESS STEEL INSERT STIFFENERS FOR HDPE TUBING SHALL BE USED AT ALL COMPRESSION FITTINGS. INSERT STIFFENERS SHALL BE FROM THE SAME MANUFACTURER AS THE COMPRESSION FITTING USED.
13. FOR RECLAIMED WATER SERVICES AND METERS, ALL RECLAIMED TUBING SHALL BE MANUFACTURED SOLID PURPLE, SPL WW-65A. ALL APPURTENANCES SHALL BE MANUFACTURED PURPLE IF AVAILABLE. ALL FITTINGS THAT ARE NOT AVAILABLE FROM THE MANUFACTURER IN PURPLE SHALL BE PAINTED PURPLE PER SPL WW-3C. ALL METER BOX LIDS SHALL BE PURPLE AND HAVE **"RECLAIMED WATER"** CAST INTO THEM, SPL WW-145A.

CITY OF AUSTIN AUSTIN WATER	WATER SERVICE & METER INSTALLATION - 1" & SMALLER METERS	
JEFF A. KYLE 08/16/2019 ADOPTED	THE ARCHITECT/ENGINEER ASSUMES RESPONSIBILITY FOR APPROPRIATE USE OF THIS STANDARD.	STANDARD NO. 520-AW-01B 2 OF 2

CITY OF AUSTIN WATER AND WASTEWATER UTILITY	STANDARD FIRE LINE INSTALLATION WITHOUT MASTER METER	
Kathi L. Flowers 8/31/2021	THE ARCHITECT/ENGINEER ASSUMES RESPONSIBILITY FOR APPROPRIATE USE OF THIS STANDARD.	STANDARD NO. 520S-19C 1 OF 2

NOTES:

1. **ALL BACKFLOW PREVENTION ASSEMBLIES SHALL HAVE LAB AND FIELD APPROVAL FROM THE UNIVERSITY OF SOUTHERN CALIFORNIA FOUNDATION FOR CROSS CONNECTION CONTROL AND HYDRAULIC RESEARCH.**
2. **ALL TEST PORTS SHALL BE DIRECTED UPWARD AND PLUGGED. TEST PORTS ARE LOCATED ON SERVICE SIDE. PLUGS SHALL BE NON-FERROUS.**
3. **BACKFLOW PREVENTION ASSEMBLIES SHALL BE INSTALLED IN THE UPRIGHT HORIZONTAL POSITION, UNLESS OTHERWISE APPROVED. BACKFLOW PREVENTION ASSEMBLIES SHALL NOT BE ROTATED ON THEIR AXIS.**
4. **CLEARANCE SHALL BE AS INDICATED,AND IN THE STANDARD CROSS CONNECTION ORDINANCES AND UCM.**
5. **ACCESS OPENING MUST BE LARGE ENOUGH TO REMOVE LARGEST PORTION OF BACKFLOW PREVENTER, BUT NOT LESS THAN 750 mm (30") IN LEAST DIMENSION.**
6. **TEST AND MAINTENANCE REPORT SHALL BE RECEIVED BY AUSTIN WATER UTILITY'S SPECIAL SERVICE DIVISION WITHIN 5 DAYS AFTER BEING INSTALLED.**
7. **VAULT SHALL NOT BE INSTALLED IN TRAFFIC AREA.**
8. **VAULT DEPTH MAY NOT EXCEED 1.8m (72"), BOTTOM OF LID TO TOP OF FLOOR.**
9. **HAND WHEELS SHALL BE HORIZONTALLY LOCATED WITHIN 300mm (12") OF ACCESS OPENING.**
10. **FOR ACCESS DOORS SEE SPL WW-614 OR APPROVED EQUAL (H20 LOADING REQUIRED).**
11. **FOR VAULT SEE SPL WW-298 OR APPROVED EQUAL (H20 LOADING REQUIRED).**
12. **VAULT PIPE WALL VOIDS SHALL BE SEALED WITH NON-SHRINK GROUT OR SEALANT PER SPL WW-148A OR APPROVED EQUAL.**
13. **THE TOP OF THE METER VAULT SHALL BE AT AN ELEVATION SUCH THAT THE SURROUNDING GROUND SLOPES AWAY FROM THE VAULT. ADDITIONAL DRAINAGE CONSIDERATION SUCH AS CONNECTION OF VAULT TO STORM SEWER, LATERAL DRAIN LINES FROM GRAVEL BED OR OTHER MEANS SHALL BE REQUIRED IF CONDITIONS CAUSE WATER TO COLLECT IN VAULT.**

CITY OF AUSTIN WATER AND WASTEWATER UTILITY	STANDARD FIRE LINE INSTALLATION WITHOUT MASTER METER	
Kathi L. Flowers 8/31/2021	THE ARCHITECT/ENGINEER ASSUMES RESPONSIBILITY FOR APPROPRIATE USE OF THIS STANDARD.	STANDARD NO. 520S-19C 2 OF 2

PROJECT:

SWEETWATER LOT 3B

LOCATION:

16620 SWEETWATER
VILLAGE DRIVE
BEE CAVE (ETJ)
TEXAS 78669

AES Professional Services LLC

project team

CIVIL ENGINEER:
AES Engineering Consultant
Ahmed El Seweify P.E.
2514 PRESERVE TRAIL, CEDAR PARK, TX 78613
Ph. (512) 785-9034
email: contact@aes-engs.com
Texas Firm F-22721

Owner Representative:
DORADO DEVELOPMENT
CONTACT: David Cummings
p 210.732.5335
e david@doradodev.com

Architect:
VILLA PARK ARCHITECTURE
CONTACT: MARK NEVILLE
p 210.384.8900
e mark@villapark.sa.com

GEOTECHNICAL ENGINEER
ROCK ENGINEERING & TESTING
10856 VANDALE ST. SAN ANTONIO TEXAS 78216
(210) 495-8000
WWW.ROCKTESTING.COM

SURVEY:
DELTA LAND SURVEYING
14900 AVERY RANCH BLVD. STE C200
AUSTIN, TX 78717
512-781-9800

2025-11-12

STATE OF TEXAS
AHMED EL SEWEIFY
141828
LICENSED PROFESSIONAL ENGINEER

Ahmed El Seweify

REVISION	DATE	ISSUE TITLE

DRAWING TITLE:

WATER & WASTEWATER DETAILS 3

PROJECT NO:	DRAWN & CHECKED BY:
10-1072	AES
DATE:	SCALE:
2025-11-12	NTS

SHEET NUMBER:

23 of 29

10/14/2025 1:18:57 AM

G:\My Drive\AES ENGINEERING\10-1072 Sweetwater\cad\WASTEWATER DETAILS 2.dwg

Contributing Zone Plan Application

Texas Commission on Environmental Quality

for Regulated Activities on the Contributing Zone to the Edwards Aquifer and Relating to 30 TAC §213.24(1), Effective June 1, 1999

To ensure that the application is administratively complete, confirm that all fields in the form are complete, verify that all requested information is provided, consistently reference the same site and contact person in all forms in the application, and ensure forms are signed by the appropriate party.

Note: Including all the information requested in the form and attachments contributes to more streamlined technical reviews.

Signature

To the best of my knowledge, the responses to this form accurately reflect all information requested concerning the proposed regulated activities and methods to protect the Edwards Aquifer. This **Contributing Zone Plan Application** is hereby submitted for TCEQ review and Executive Director approval. The application was prepared by:

Print Name of Customer/Agent: Ahmed El Seweify

Date: 02/19/2026

Signature of Customer/Agent:

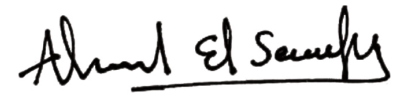

Regulated Entity Name: Sweetwater Dorado LLC.

Project Information

1. County: Travis
2. Stream Basin: Colorado River Basin
3. Groundwater Conservation District (if applicable): _____
4. Customer (Applicant):

   Contact Person: David M. Cummings
   Entity: Sweetwater Dorado LLC.
   Mailing Address: 19787 W. IH-10, Suite 201
   City, State: San Antonio, Texas Zip: 78257
   Telephone: 210-867-5600 Fax: 210-732-5445
   Email Address: david@doradodev.com

5. Agent/Representative (If any):

   Contact Person: Ahmed El Seweify
   Entity: AES Engineering Consultant
   Mailing Address: 2514 Preserve Trail,
   City, State: Cedar Park, Texas Zip: 78613
   Telephone: 512-785-9034 Fax: _____
   Email Address: aelseweify@aesengineeringservices.com

6. Project Location:

   ☐ The project site is located inside the city limits of _____.
   ☒ The project site is located outside the city limits but inside the ETJ (extra-territorial jurisdiction) of Bee Cave.
   ☐ The project site is not located within any city's limits or ETJ.

7. ☒ The location of the project site is described below. Sufficient detail and clarity has been provided so that the TCEQ's Regional staff can easily locate the project and site boundaries for a field investigation.

   16620 Sweetwater Village Drive, Bee Cave Texas 78669

8. ☒ **Attachment A - Road Map**. A road map showing directions to and the location of the project site is attached. The map clearly shows the boundary of the project site.

9. ☒ **Attachment B - USGS Quadrangle Map**. A copy of the official 7 ½ minute USGS Quadrangle Map (Scale: 1" = 2000') is attached. The map(s) clearly show:

   ☒ Project site boundaries.
   ☐ USGS Quadrangle Name(s).

10. ☒ **Attachment C - Project Narrative**. A detailed narrative description of the proposed project is attached. The project description is consistent throughout the application and contains, at a minimum, the following details:

    ☒ Area of the site
    ☐ Offsite areas
    ☒ Impervious cover
    ☒ Permanent BMP(s)
    ☒ Proposed site use
    ☐ Site history
    ☐ Previous development
    ☐ Area(s) to be demolished

11. Existing project site conditions are noted below:

    ☐ Existing commercial site
    ☐ Existing industrial site
    ☐ Existing residential site

☐ Existing paved and/or unpaved roads
☒ Undeveloped (Cleared)
☐ Undeveloped (Undisturbed/Not cleared)
☐ Other: _____

12. The type of project is:

☐ Residential: # of Lots: _____
☐ Residential: # of Living Unit Equivalents: _____
☒ Commercial
☐ Industrial
☐ Other: _____

13. Total project area (size of site): 3.093 Acres

Total disturbed area: 2.06 Acres

14. Estimated projected population: n/a

15. The amount and type of impervious cover expected after construction is complete is shown below:

Table 1 - Impervious Cover

Impervious Cover of Proposed Project	***Sq. Ft.***	***Sq. Ft./Acre***	***Acres***
Structures/Rooftops	28050	÷ 43,560 =	0.644
Parking	59759	÷ 43,560 =	1.371
Other paved surfaces		÷ 43,560 =	
Total Impervious Cover	87809	÷ 43,560 =	2.016

Total Impervious Cover 2.016 **÷ Total Acreage** 3.093 **X 100 =** 65.17**% Impervious Cover**

16. ☒ **Attachment D - Factors Affecting Surface Water Quality**. A detailed description of all factors that could affect surface water quality is attached. If applicable, this includes the location and description of any discharge associated with industrial activity other than construction.

17. ☒ Only inert materials as defined by 30 TAC 330.2 will be used as fill material.

For Road Projects Only

Complete questions 18 - 23 if this application is exclusively for a road project.

☒ N/A

18. Type of project:

- ☐ TXDOT road project.
- ☐ County road or roads built to county specifications.
- ☐ City thoroughfare or roads to be dedicated to a municipality.
- ☐ Street or road providing access to private driveways.

19. Type of pavement or road surface to be used:

- ☐ Concrete
- ☐ Asphaltic concrete pavement
- ☐ Other: _____

20. Right of Way (R.O.W.):

Length of R.O.W.: _____ feet.
Width of R.O.W.: _____ feet.
L x W = _____Ft^2 ÷ 43,560 Ft^2/Acre = _____ acres.

21. Pavement Area:

Length of pavement area: _____ feet.
Width of pavement area: _____ feet.
L x W = _____Ft^2 ÷ 43,560 Ft^2/Acre = _____ acres.
Pavement area _____ acres ÷ R.O.W. area _____ acres x 100 = _____% impervious cover.

22. ☐ A rest stop will be included in this project.

☐ A rest stop will not be included in this project.

23. ☐ Maintenance and repair of existing roadways that do not require approval from the TCEQ Executive Director. Modifications to existing roadways such as widening roads/adding shoulders totaling more than one-half (1/2) the width of one (1) existing lane require prior approval from the TCEQ.

Stormwater to be generated by the Proposed Project

24. ☒ **Attachment E - Volume and Character of Stormwater**. A detailed description of the volume (quantity) and character (quality) of the stormwater runoff which is expected to occur from the proposed project is attached. The estimates of stormwater runoff quality and quantity are based on area and type of impervious cover. Include the runoff coefficient of the site for both pre-construction and post-construction conditions.

Wastewater to be generated by the Proposed Project

25. ☐ Wastewater is to be discharged in the contributing zone. Requirements under 30 TAC §213.6(c) relating to Wastewater Treatment and Disposal Systems have been satisfied.

☒ N/A

26. Wastewater will be disposed of by:

☐ On-Site Sewage Facility (OSSF/Septic Tank):

☐ **Attachment F - Suitability Letter from Authorized Agent**. An on-site sewage facility will be used to treat and dispose of the wastewater from this site. The appropriate licensing authority's (authorized agent) written approval is attached. It states that the land is suitable for the use of private sewage facilities and will meet or exceed the requirements for on-site sewage facilities as specified under 30 TAC Chapter 285 relating to On-site Sewage Facilities.

☐ Each lot in this project/development is at least one (1) acre (43,560 square feet) in size. The system will be designed by a licensed professional engineer or registered sanitarian and installed by a licensed installer in compliance with 30 TAC Chapter 285.

☒ Sewage Collection System (Sewer Lines):

The sewage collection system will convey the wastewater to the _____ (name) Treatment Plant. The treatment facility is:

☒ Existing.
☐ Proposed.

☐ N/A

Permanent Aboveground Storage Tanks(ASTs) ≥ 500 Gallons

Complete questions 27 - 33 if this project includes the installation of AST(s) with volume(s) greater than or equal to 500 gallons.

☒N/A

27. Tanks and substance stored:

Table 2 - Tanks and Substance Storage

AST Number	*Size (Gallons)*	*Substance to be Stored*	*Tank Material*
1			
2			
3			
4			
5			

Total x 1.5 = _____ Gallons

28. ☐ The AST will be placed within a containment structure that is sized to capture one and one-half (1 1/2) times the storage capacity of the system. For facilities with more than

one tank system, the containment structure is sized to capture one and one-half (1 1/2) times the cumulative storage capacity of all systems.

☐ **Attachment G - Alternative Secondary Containment Methods**. Alternative methods for providing secondary containment are proposed. Specifications showing equivalent protection for the Edwards Aquifer are attached.

29. Inside dimensions and capacity of containment structure(s):

Table 3 - Secondary Containment

Length (L)(Ft.)	*Width(W)(Ft.)*	*Height (H)(Ft.)*	*L x W x H = (Ft3)*	*Gallons*

Total: _____ Gallons

30. Piping:

☐ All piping, hoses, and dispensers will be located inside the containment structure.
☐ Some of the piping to dispensers or equipment will extend outside the containment structure.
☐ The piping will be aboveground
☐ The piping will be underground

31. ☐ The containment area must be constructed of and in a material impervious to the substance(s) being stored. The proposed containment structure will be constructed of: _____.

32. ☐ **Attachment H - AST Containment Structure Drawings**. A scaled drawing of the containment structure is attached that shows the following:

☐ Interior dimensions (length, width, depth and wall and floor thickness).
☐ Internal drainage to a point convenient for the collection of any spillage.
☐ Tanks clearly labeled
☐ Piping clearly labeled
☐ Dispenser clearly labeled

33. ☐ Any spills must be directed to a point convenient for collection and recovery. Spills from storage tank facilities must be removed from the controlled drainage area for disposal within 24 hours of the spill.

☐ In the event of a spill, any spillage will be removed from the containment structure within 24 hours of the spill and disposed of properly.

☐ In the event of a spill, any spillage will be drained from the containment structure through a drain and valve within 24 hours of the spill and disposed of properly. The drain and valve system are shown in detail on the scaled drawing.

Site Plan Requirements

Items 34 - 46 must be included on the Site Plan.

34. ☒ The Site Plan must have a minimum scale of 1" = 400'.

    Site Plan Scale: 1" = 30'.

35. 100-year floodplain boundaries:

    ☐ Some part(s) of the project site is located within the 100-year floodplain. The floodplain is shown and labeled.

    ☒ No part of the project site is located within the 100-year floodplain.

    The 100-year floodplain boundaries are based on the following specific (including date of material) sources(s): _____.

36. ☒ The layout of the development is shown with existing and finished contours at appropriate, but not greater than ten-foot contour intervals. Lots, recreation centers, buildings, roads, etc. are shown on the site plan.

    ☒ The layout of the development is shown with existing contours at appropriate, but not greater than ten-foot contour intervals. Finished topographic contours will not differ from the existing topographic configuration and are not shown. Lots, recreation centers, buildings, roads, etc. are shown on the site plan.

37. ☒ A drainage plan showing all paths of drainage from the site to surface streams.

38. ☒ The drainage patterns and approximate slopes anticipated after major grading activities.

39. ☒ Areas of soil disturbance and areas which will not be disturbed.

40. ☒ Locations of major structural and nonstructural controls. These are the temporary and permanent best management practices.

41. ☒ Locations where soil stabilization practices are expected to occur.

42. ☐ Surface waters (including wetlands).

    ☒ N/A

43. ☐ Locations where stormwater discharges to surface water.

    ☒ There will be no discharges to surface water.

44. ☐ Temporary aboveground storage tank facilities.

    ☐ Temporary aboveground storage tank facilities will not be located on this site.

45. ☐ Permanent aboveground storage tank facilities.

☐ Permanent aboveground storage tank facilities will not be located on this site.

46. ☒ Legal boundaries of the site are shown.

Permanent Best Management Practices (BMPs)

Practices and measures that will be used during and after construction is completed.

47. ☒ Permanent BMPs and measures must be implemented to control the discharge of pollution from regulated activities after the completion of construction.

☒ N/A

48. ☒ These practices and measures have been designed, and will be constructed, operated, and maintained to insure that 80% of the incremental increase in the annual mass loading of total suspended solids (TSS) from the site caused by the regulated activity is removed. These quantities have been calculated in accordance with technical guidance prepared or accepted by the executive director.

☒ The TCEQ Technical Guidance Manual (TGM) was used to design permanent BMPs and measures for this site.

☐ A technical guidance other than the TCEQ TGM was used to design permanent BMPs and measures for this site. The complete citation for the technical guidance that was used is: _____.

☐ N/A

49. ☒ Owners must insure that permanent BMPs and measures are constructed and function as designed. A Texas Licensed Professional Engineer must certify in writing that the permanent BMPs or measures were constructed as designed. The certification letter must be submitted to the appropriate regional office within 30 days of site completion.

☐ N/A

50. Where a site is used for low density single-family residential development and has 20 % or less impervious cover, other permanent BMPs are not required. This exemption from permanent BMPs must be recorded in the county deed records, with a notice that if the percent impervious cover increases above 20% or land use changes, the exemption for the whole site as described in the property boundaries required by 30 TAC §213.4(g) (relating to Application Processing and Approval), may no longer apply and the property owner must notify the appropriate regional office of these changes.

☐ The site will be used for low density single-family residential development and has 20% or less impervious cover.

☐ The site will be used for low density single-family residential development but has more than 20% impervious cover.

☒ The site will not be used for low density single-family residential development.

51. The executive director may waive the requirement for other permanent BMPs for multi-family residential developments, schools, or small business sites where 20% or less impervious cover is used at the site. This exemption from permanent BMPs must be recorded in the county deed records, with a notice that if the percent impervious cover increases above 20% or land use changes, the exemption for the whole site as described in the property boundaries required by 30 TAC §213.4(g) (relating to Application Processing and Approval), may no longer apply and the property owner must notify the appropriate regional office of these changes.

    ☐ **Attachment I - 20% or Less Impervious Cover Waiver**. The site will be used for multi-family residential developments, schools, or small business sites and has 20% or less impervious cover. A request to waive the requirements for other permanent BMPs and measures is attached.
    ☐ The site will be used for multi-family residential developments, schools, or small business sites but has more than 20% impervious cover.
    ☒ The site will not be used for multi-family residential developments, schools, or small business sites.

52. ☒ **Attachment J - BMPs for Upgradient Stormwater**.

    ☒ A description of the BMPs and measures that will be used to prevent pollution of surface water, groundwater, or stormwater that originates upgradient from the site and flows across the site is attached.
    ☐ No surface water, groundwater or stormwater originates upgradient from the site and flows across the site, and an explanation is attached.
    ☐ Permanent BMPs or measures are not required to prevent pollution of surface water, groundwater, or stormwater that originates upgradient from the site and flows across the site, and an explanation is attached.

53. ☒ **Attachment K - BMPs for On-site Stormwater**.

    ☒ A description of the BMPs and measures that will be used to prevent pollution of surface water or groundwater that originates on-site or flows off the site, including pollution caused by contaminated stormwater runoff from the site is attached.
    ☐ Permanent BMPs or measures are not required to prevent pollution of surface water or groundwater that originates on-site or flows off the site, including pollution caused by contaminated stormwater runoff, and an explanation is attached.

54. ☒ **Attachment L - BMPs for Surface Streams**. A description of the BMPs and measures that prevent pollutants from entering surface streams is attached.

    ☐ N/A

55. ☒ **Attachment M - Construction Plans**. Construction plans and design calculations for the proposed permanent BMPs and measures have been prepared by or under the direct supervision of a Texas Licensed Professional Engineer, and are signed, sealed, and dated. Construction plans for the proposed permanent BMPs and measures are

attached and include: Design calculations, TCEQ Construction Notes, all proposed structural plans and specifications, and appropriate details.

☐ N/A

56. ☒ **Attachment N - Inspection, Maintenance, Repair and Retrofit Plan**. A site and BMP specific plan for the inspection, maintenance, repair, and, if necessary, retrofit of the permanent BMPs and measures is attached. The plan fulfills all of the following:

    ☒ Prepared and certified by the engineer designing the permanent BMPs and measures
    ☐ Signed by the owner or responsible party
    ☐ Outlines specific procedures for documenting inspections, maintenance, repairs, and, if necessary, retrofit.
    ☐ Contains a discussion of record keeping procedures

    ☐ N/A

57. ☒ **Attachment O - Pilot-Scale Field Testing Plan**. Pilot studies for BMPs that are not recognized by the Executive Director require prior approval from the TCEQ. A plan for pilot-scale field testing is attached.

    ☒ N/A

58. ☒ **Attachment P - Measures for Minimizing Surface Stream Contamination**. A description of the measures that will be used to avoid or minimize surface stream contamination and changes in the way in which water enters a stream as a result of the construction and development is attached. The measures address increased stream flashing, the creation of stronger flows and in-stream velocities, and other in-stream effects caused by the regulated activity, which increase erosion that result in water quality degradation.

    ☒ N/A

Responsibility for Maintenance of Permanent BMPs and Measures after Construction is Complete.

59. ☒ The applicant is responsible for maintaining the permanent BMPs after construction until such time as the maintenance obligation is either assumed in writing by another entity having ownership or control of the property (such as without limitation, an owner's association, a new property owner or lessee, a district, or municipality) or the ownership of the property is transferred to the entity. Such entity shall then be responsible for maintenance until another entity assumes such obligations in writing or ownership is transferred.

60. ☒ A copy of the transfer of responsibility must be filed with the executive director at the appropriate regional office within 30 days of the transfer if the site is for use as a multiple single-family residential development, a multi-family residential development,

or a non-residential development such as commercial, industrial, institutional, schools, and other sites where regulated activities occur.

Administrative Information

61. ☒ Submit one (1) original and one (1) copy of the application, plus additional copies as needed for each affected incorporated city, groundwater conservation district, and county in which the project will be located. The TCEQ will distribute the additional copies to these jurisdictions.

62. ☒ Any modification of this Contributing Zone Plan may require TCEQ review and Executive Director approval prior to construction, and may require submission of a revised application, with appropriate fees.

63. ☒ The site description, controls, maintenance, and inspection requirements for the storm water pollution prevention plan (SWPPP) developed under the EPA NPDES general permits for stormwater discharges have been submitted to fulfill paragraphs 30 TAC §213.24(1-5) of the technical report. All requirements of 30 TAC §213.24(1-5) have been met by the SWPPP document.

☒ The Temporary Stormwater Section (TCEQ-0602) is included with the application.

AES Engineering Consultant

VICINITY MAP

SCALE NTS

16620 SWEETWATER VILLAGE DR.
AUSTIN, TX
ATTACHMENT A

PAGE

1 OF 1

U.S. DEPARTMENT OF THE INTERIOR
U.S. GEOLOGICAL SURVEY

The National Map US Topo

SHINGLE HILLS QUADRANGLE
TEXAS
7.5-MINUTE SERIES

SITE IS HERE

Produced by the United States Geological Survey

North American Datum of 1983 (NAD83)
World Geodetic System of 1984 (WGS84). Projection and
1 000-meter grid:Universal Transverse Mercator, Zone 14R

This map is not a legal document. Boundaries may be generalized for this map scale. Private lands within government reservations may not be shown. Obtain permission before entering private lands.

Imagery.....NAIP, September 2016 - November 2016
Roads.....U.S. Census Bureau, 2015
Names.....GNIS, 1979 - 2015
Hydrography.....National Hydrography Dataset, 2002 - 2018
Contours.....National Elevation Dataset, 2002 - 2010
Boundaries.....Multiple sources; see metadata file 2016 - 2017

Wetlands.....FWS National Wetlands Inventory 1983

MN
GN
0°28′ 8 MILS
3°52′ 69 MILS
UTM GRID AND 2019 MAGNETIC NORTH DECLINATION AT CENTER OF SHEET

U.S. National Grid
100,000 - m Square ID
NU
Grid Zone Designation 14R

SCALE 1:24 000

1 0.5 0 KILOMETERS 1 2
1000 500 0 METERS 1000 2000
1 0.5 0 1
MILES
1000 0 1000 2000 3000 4000 5000 6000 7000 8000 9000 10000
FEET

CONTOUR INTERVAL 20 FEET
NORTH AMERICAN VERTICAL DATUM OF 1988

This map was produced to conform with the
National Geospatial Program US Topo Product Standard, 2011.
A metadata file associated with this product is draft version 0.6.18

TEXAS
QUADRANGLE LOCATION

1	2	3
4		5
6	7	8

ADJOINING QUADRANGLES
1 Spicewood
2 Pace Bend
3 Mansfield Dam
4 Hammetts Crossing
5 Bee Cave
6 Henly
7 Dripping Springs
8 Signal Hill

ROAD CLASSIFICATION
Expressway
Secondary Hwy
Ramp
Local Connector
Local Road
4WD
Interstate Route
US Route
State Route

SHINGLE HILLS, TX
2019

NSN 7643016398257
NGA REF NO. USGSX24K41096

Sweetwater Lot 3B
Project Description-Attachment C

This 3.093-acre project site is located at 16620 Sweetwater Village, Bee Cave, Travis County. This site will be a multi-use development that includes an 28,050 sf 1-story building that includes an 7,884-sf office, 7,884 sf medical office, 3000 sf restaurant, and 7,885 sf retail spaces. No detention pond or water quality pond will be provided on-site, runoff will be discharged into an existing off-site Water Quality that has been approved by TCEQ and LCRA.

Existing Conditions:

The existing site is covered with native grass/weeds and minor scattered brushes and some trees. There are no other paved areas or existing buildings on the site.

Proposed Conditions:

The proposed development of 3.093 acres (134,687 sf) includes 7,884-sf office, 7,884 sf medical office, 3000 sf restaurant, and 7,885 sf retail spaces. The limit of construction is 2.933 acres and impervious cover is 65.17%

Soil Condition: Clayey Sand.

Disturbance activities:

Grading and excavation on the entire site.

The pavement on the entire site.

Building at the building areas.

Landscaping.

Sweetwater Lot 3B
Factors Affecting Water Quality-Attachment D

The following construction activities may affect surface and groundwater quality:

Pollutant-Generating Activity	**Pollutants or Pollutant Constituents** (that could be discharged if exposed to stormwater)	**Location on Site**
Grading, Excavation	Oil, Gasoline, grease, hydraulic fluid, coolant.	Entire site
Pavement	Cement	Entire site
Building	Stucco, paint	At Building
*Landscaping (if any)	Fertilizer, pesticide	All landscape areas

Sweetwater Lot 3B
Volume and Character of Storm Water-Attachment "E"

A pre and post development drainage analysis was performed to determine flow for 25- and 100-year storm event as follow:

At pre-developed condition the flow for Q (25) and Q (100) are 16.59 cfs and 24.86 cfs, respectively. At post developed condition the flow for Q(25) and Q(100) are 18.97 cfs and 27.13, respectively.

An existing off-site Detention and water quality pond is provided and has been previously approved by TCEQ.

Table 2.2 on the City of Austin Drainage manual has used to determine the CN Value, see construction plan for details.

Autodesk Storm and Water Analysis has been used to determine the runoff, model available upon request.

Temporary Erosion and sedimentation control such as silt fence, concrete washout, spoil area, construction entrance have been provided to prevent sediments and pollutants from leaving the site. In addition, a water quality pond has been provided, please see construction plan for details.

Sweetwater Lot 3B
BMP For Upgradient stormwater- Attachment J

Temporary erosion and sedimentation control such as Silt fence, construction entrance, concrete washout have been added to the plan to contain upgradient stormwater.

Filtration and sedimentation water quality pond has also been provided as a permanent measure to contain upgradient stormwater.

Sweetwater Lot 3B
Building BMP for On- Site Storm Water- Attachment K

Our site is discharging into the included Sweetwater Crossing Phase 1 CZP approved by letter dated November 2nd, 2016, which in indicates that an extended detention basin and a bio-retention basin in series are treating stormwater runoff.

Sweetwater Lot 3B
Streams-Attachment L

The existing Sediment/Filtration pond as explained in Attachment “K”, will serve as a measure to prevent pollutant from entering surface stream

Sweetwater Lot 3B
Construction Plans-Attachment M

Construction plan as well as previously approved water quality plan will be provided with this update.

TCEQ construction notes can be found on General notes included in plan set.
All proposed structural BMP(s) are shown on plans.

Sweetwater Lot 3B
Inspection, Maintenance, Repair and Retrofit Plan-Attachment N

During the first year of operation and after large storms, inspect sand filter system monthly to ensure proper operation and provide maintenance personnel with a feel for the operational characteristics of the filter (Sand bed, PVC pipes and clean outs). After the first year of operation, inspect after every significant rainfall event and as needed based on first years' experience.

Sediment Removal: Remove sediment from the inlet structure, sedimentation chamber and filtration chamber after each rainfall event.

Media Replacement: sand bed shall be cleaned once a year or when the drawdown time exceeds 48 hours. The geotextile wrapping around the PVC pipes should be inspected each time the sand bed is being replaced and should be repaired or replaced if damage or permanent clogging is observed. Debris and Litter Debris and litter will accumulate near the sedimentation basin outlet device and should be removed during regular clean-up operations and inspections. Particular attention should be paid to floating debris that can eventually clog the pipes and valve.

Filter Underdrain: Clean the underdrain piping network to remove any sediment buildup at least every two years, or as needed to maintain the design drawdown time.

Controls: Verify that all controls are functioning correctly at least once per month and after each rainfall event. Inspect any components that are inoperative, i.e.....gates, ladder, fence, pump and pump appurtenances. Should any operational problems be found, repairs or replacement should be completed immediately.

Security Fencing: Check and verify that the BMP facility site is secure at least once per month. Any site found to be insecure should be made secure immediately.

Responsible Party for Maintenance: Sweetwater Lot 3B, 16620 Sweetwater Village Dr.,Bee Cave, Texas 78669
Contact name: TBD David Cummings III Pres Sweetwater Dorado LLC
Telephone Number: TBD 210-732-5335 Ext 1
Signature of Responsible Party:
Date: 3/11/26

Project Engineer: Ahmed El Seweify, P.E.
Address: 2514 Preserve Trail, Cedar Park, TX 78613
Phone: 512-785-9034
Date: 02-21-2026

Sweetwater Lot 3B
Measures for Minimizing Surface Stream Contamination-Attachment P

The measures that will be used to avoid or minimize surface stream contamination due to the changes in the way the water enters a stream as a result of the construction and development will be as outlined below:

I- **During Construction**

A) Erosion and Sedimentation:

Silt fences will be installed prior to construction at the downstream edge of disturbed areas where there will be shallow sheet flow. An stabilized construction entrance pad will be installed prior to construction to control tracking off site. Disturbed areas will be restored as soon as practicable during construction. Temporary erosion and sedimentation controls will be removed only after all disturbed areas have been restored.

B) Stabilization Practices:

Disturbed areas including spoils disposal sites where construction activity temporarily ceases for at least 21 days will be stabilized with seeding and mulching by the 14th day after the last disturbance. Seeding shall be as follows:

1. **Grasses:**
   Unlulled Bermuda and Winter Rye from September 15 to March Hulled Bermuda from March 2 to September 14.
2. **Application:**
   Broadcast seeding or hydro mulch
3. **Fertilization:**
   Fertilization shall have an analysis of 15-15-15 and shall be applied at the rate of 1.5 pounds per 1,000 square feet.

C) Other Pollutant Sources:

There will be no source of pollutants other than those generated by the construction of this project and the water quality/detention pond associated with the site.

D) Dissipation devices:

Rock riprap and rock berm shall be installed at the end of the outflow structure for pond.

II- **After Construction**

E) See Attachment N- Inspection, Maintenance, repair and Retrofit Plan.

Temporary Stormwater Section

Texas Commission on Environmental Quality

for Regulated Activities on the Edwards Aquifer Recharge Zone and Relating to 30 TAC §213.5(b)(4)(A), (B), (D)(I) and (G); Effective June 1, 1999

To ensure that the application is administratively complete, confirm that all fields in the form are complete, verify that all requested information is provided, consistently reference the same site and contact person in all forms in the application, and ensure forms are signed by the appropriate party.

Note: Including all the information requested in the form and attachments contributes to more streamlined technical reviews.

Signature

To the best of my knowledge, the responses to this form accurately reflect all information requested concerning the proposed regulated activities and methods to protect the Edwards Aquifer. This **Temporary Stormwater Section** is hereby submitted for TCEQ review and executive director approval. The application was prepared by:

Print Name of Customer/Agent: Ahmed El Seweify

Date: 02/21/2026

Signature of Customer/Agent:

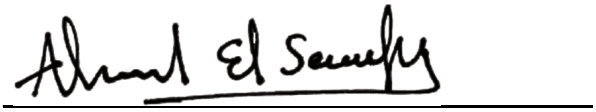

Regulated Entity Name: Sweetwater Dorado LLC.

Project Information

Potential Sources of Contamination

Examples: Fuel storage and use, chemical storage and use, use of asphaltic products, construction vehicles tracking onto public roads, and existing solid waste.

1. Fuels for construction equipment and hazardous substances which will be used during construction:

   ☐ The following fuels and/or hazardous substances will be stored on the site: _____

   These fuels and/or hazardous substances will be stored in:

   ☐ Aboveground storage tanks with a cumulative storage capacity of less than 250 gallons will be stored on the site for less than one (1) year.

☐ Aboveground storage tanks with a cumulative storage capacity between 250 gallons and 499 gallons will be stored on the site for less than one (1) year.

☐ Aboveground storage tanks with a cumulative storage capacity of 500 gallons or more will be stored on the site. An Aboveground Storage Tank Facility Plan application must be submitted to the appropriate regional office of the TCEQ prior to moving the tanks onto the project.

☒ Fuels and hazardous substances will not be stored on the site.

2. ☒ **Attachment A - Spill Response Actions**. A site specific description of the measures to be taken to contain any spill of hydrocarbons or hazardous substances is attached.

3. ☐ Temporary aboveground storage tank systems of 250 gallons or more cumulative storage capacity must be located a minimum horizontal distance of 150 feet from any domestic, industrial, irrigation, or public water supply well, or other sensitive feature.

4. ☒ **Attachment B - Potential Sources of Contamination**. A description of any activities or processes which may be a potential source of contamination affecting surface water quality is attached.

Sequence of Construction

5. ☒ **Attachment C - Sequence of Major Activities**. A description of the sequence of major activities which will disturb soils for major portions of the site (grubbing, excavation, grading, utilities, and infrastructure installation) is attached.

☒ For each activity described, an estimate (in acres) of the total area of the site to be disturbed by each activity is given.

☒ For each activity described, include a description of appropriate temporary control measures and the general timing (or sequence) during the construction process that the measures will be implemented.

6. ☒ Name the receiving water(s) at or near the site which will be disturbed or which will receive discharges from disturbed areas of the project: Colorado River Basin

Temporary Best Management Practices (TBMPs)

Erosion control examples: tree protection, interceptor swales, level spreaders, outlet stabilization, blankets or matting, mulch, and sod. Sediment control examples: stabilized construction exit, silt fence, filter dikes, rock berms, buffer strips, sediment traps, and sediment basins. Please refer to the Technical Guidance Manual for guidelines and specifications. All structural BMPs must be shown on the site plan.

7. ☒ **Attachment D – Temporary Best Management Practices and Measures**. TBMPs and measures will prevent pollution of surface water, groundwater, and stormwater. The construction-phase BMPs for erosion and sediment controls have been designed to retain sediment on site to the extent practicable. The following information is attached:

☒ A description of how BMPs and measures will prevent pollution of surface water, groundwater or stormwater that originates upgradient from the site and flows across the site.

☒ A description of how BMPs and measures will prevent pollution of surface water or groundwater that originates on-site or flows off site, including pollution caused by contaminated stormwater runoff from the site.

☒ A description of how BMPs and measures will prevent pollutants from entering surface streams, sensitive features, or the aquifer.

☒ A description of how, to the maximum extent practicable, BMPs and measures will maintain flow to naturally-occurring sensitive features identified in either the geologic assessment, TCEQ inspections, or during excavation, blasting, or construction.

8. ☒ The temporary sealing of a naturally-occurring sensitive feature which accepts recharge to the Edwards Aquifer as a temporary pollution abatement measure during active construction should be avoided.

☐ **Attachment E - Request to Temporarily Seal a Feature**. A request to temporarily seal a feature is attached. The request includes justification as to why no reasonable and practicable alternative exists for each feature.

☒ There will be no temporary sealing of naturally-occurring sensitive features on the site.

9. ☒ **Attachment F - Structural Practices**. A description of the structural practices that will be used to divert flows away from exposed soils, to store flows, or to otherwise limit runoff discharge of pollutants from exposed areas of the site is attached. Placement of structural practices in floodplains has been avoided.

10. ☒ **Attachment G - Drainage Area Map**. A drainage area map supporting the following requirements is attached:

☐ For areas that will have more than 10 acres within a common drainage area disturbed at one time, a sediment basin will be provided.

☐ For areas that will have more than 10 acres within a common drainage area disturbed at one time, a smaller sediment basin and/or sediment trap(s) will be used.

☐ For areas that will have more than 10 acres within a common drainage area disturbed at one time, a sediment basin or other equivalent controls are not attainable, but other TBMPs and measures will be used in combination to protect down slope and side slope boundaries of the construction area.

☐ There are no areas greater than 10 acres within a common drainage area that will be disturbed at one time. A smaller sediment basin and/or sediment trap(s) will be used in combination with other erosion and sediment controls within each disturbed drainage area.

☒ There are no areas greater than 10 acres within a common drainage area that will be disturbed at one time. Erosion and sediment controls other than sediment basins or sediment traps within each disturbed drainage area will be used.

11. ☒ **Attachment H - Temporary Sediment Pond(s) Plans and Calculations**. Temporary sediment pond or basin construction plans and design calculations for a proposed temporary BMP or measure have been prepared by or under the direct supervision of a Texas Licensed Professional Engineer. All construction plans and design information must be signed, sealed, and dated by the Texas Licensed Professional Engineer. Construction plans for the proposed temporary BMPs and measures are attached.

    ☒ N/A

12. ☒ **Attachment I - Inspection and Maintenance for BMPs.** A plan for the inspection of each temporary BMP(s) and measure(s) and for their timely maintenance, repairs, and, if necessary, retrofit is attached. A description of the documentation procedures, recordkeeping practices, and inspection frequency are included in the plan and are specific to the site and/or BMP.

13. ☒ All control measures must be properly selected, installed, and maintained in accordance with the manufacturer's specifications and good engineering practices. If periodic inspections by the applicant or the executive director, or other information indicate a control has been used inappropriately, or incorrectly, the applicant must replace or modify the control for site situations.

14. ☒ If sediment escapes the construction site, off-site accumulations of sediment must be removed at a frequency sufficient to minimize offsite impacts to water quality (e.g., fugitive sediment in street being washed into surface streams or sensitive features by the next rain).

15. ☒ Sediment must be removed from sediment traps or sedimentation ponds not later than when design capacity has been reduced by 50%. A permanent stake will be provided that can indicate when the sediment occupies 50% of the basin volume.

16. ☒ Litter, construction debris, and construction chemicals exposed to stormwater shall be prevented from becoming a pollutant source for stormwater discharges (e.g., screening outfalls, picked up daily).

Soil Stabilization Practices

Examples: establishment of temporary vegetation, establishment of permanent vegetation, mulching, geotextiles, sod stabilization, vegetative buffer strips, protection of trees, or preservation of mature vegetation.

17. ☒ **Attachment J - Schedule of Interim and Permanent Soil Stabilization Practices**. A schedule of the interim and permanent soil stabilization practices for the site is attached.

18. ☒ Records must be kept at the site of the dates when major grading activities occur, the dates when construction activities temporarily or permanently cease on a portion of the site, and the dates when stabilization measures are initiated.

19. ☒ Stabilization practices must be initiated as soon as practicable where construction activities have temporarily or permanently ceased.

Administrative Information

20. ☒ All structural controls will be inspected and maintained according to the submitted and approved operation and maintenance plan for the project.

21. ☒ If any geologic or manmade features, such as caves, faults, sinkholes, etc., are discovered, all regulated activities near the feature will be immediately suspended. The appropriate TCEQ Regional Office shall be immediately notified. Regulated activities must cease and not continue until the TCEQ has reviewed and approved the methods proposed to protect the aquifer from any adverse impacts.

22. ☒ Silt fences, diversion berms, and other temporary erosion and sediment controls will be constructed and maintained as appropriate to prevent pollutants from entering sensitive features discovered during construction.

Sweetwater Lot 3B
Spill Response Action Attachment A

Major Spills:

Only trained personnel should ever approach a spill. Containment, clean up, or neutralization of the hazardous material be accomplished by individuals or organizations familiar with or trained in such activities. The following steps should be considered general guidelines and may not apply for all circumstances.

1. Notify responsible site contact for spill management and control.
2. Survey the scene and assess extent of spill, determine the existence or possibility of runoff, determine if any dead animals are near, evaluate the distressed nature of surrounding vegetation. Evaluate any markings on containers. Assess the physical characteristics of the material (color, solid, liquid, powder, or granules).
3. Restrict access to the spill site. Keep the public away from the hazard. Provide traffic control, as needed.
4. Notify supervisor by radio or telephone.
5. Supervisor should notify local fire department, Department of Public Safety, and district hazardous materials coordinator. Supervisor should ensure that field personnel only conduct traffic control from a safe distance from the spill.
6. Determine if a reportable discharge or spill has occurred and if so, the district hazardous materials coordinator should ensure TCEQ has been notified of the spill or release as soon as possible but not later than 24 hours after the discovery of the spill or discharge. Provide the following information, if possible:
    - the name, address, and phone number of the person making the report.
    - the date, time, and location of the spill or discharge.
    - a specific description of the hazardous substance discharged or spilled o an estimate of the quantity discharged or spilled.
    - the duration of the incident.
    - the name of the surface water affected or threatened by the discharge or spill.
    - the source of the discharge or spill.
    - a description of the extent of actual or potential harmful impact to the environment and an identification of any environmentally sensitive areas or natural resources at risk.
    - the names, addresses, and telephone numbers of the responsible person and the contact person at the location of the discharge or spill.
    - a description of any actions that have been taken, are being taken, and will be taken to contain and respond to the discharge or spill any known or anticipated health risks
    - the identity of any governmental representatives, including local authorities or third parties, responding to the discharge or spill
    - any other information that may be significant to the response action.

In addition to the good housekeeping and material management practices discussed above, the following practices will be followed for spill prevention and cleanup:

- Manufacturer's recommended methods for spill cleanup will be clearly posted and site personnel will be made aware of the procedures and the location of the information and cleanup supplies.

- Materials and equipment necessary for spill cleanup will be kept in the material storage area onsite. Equipment and material will include, but not be limited to, brooms, dustpans, mops, rags, gloves, goggles, sand, sawdust, and plastic and metal trash containers specifically for this purpose.

Minor Spills:

The responsible site contact person shall designate an area as spill storage location prepared with sand and containment device such as silt fence to store spilled material and removal to a facility for further handling. Minor spills are defined as minor equipment leakage of oil and gasoline.

Sweetwater Lot 3B
Potential Source of Contamination-Attachment B

Pollutant-Generating Activity	**Pollutants or Pollutant Constituents** (that could be discharged if exposed to stormwater)	**Location on Site**
Grading, Excavation	Oil, Gasoline, grease, hydraulic fluid, rock, gravel, sand and soil	Entire site
Pavement	Concrete & Conc. Product, reinforcement bars	Entire site
Building	Stucco, paint	At Building
Landscaping	Fertilizer, pesticide	All landscape areas
Utility Work	PVC pipe	Site, Front building

Sweetwater Lot 3B
Sequence of Major Activities- Attachment C

Order of work shall be as follows:

1- Installation of the exterior silt fence along property line downstream of site.
2- Installation of interior erosion control measures such as: sediment trap, concrete wash out area, storage and staging areas as shown on plan (Erosion Control Sheet).
3- Construct underground utilities.
4- Construct foundation and buildings.
5- Construct concrete pavement and striping.
6- Install landscaping
7- Construct permanent water quality pond.

Sweetwater Lot 3B
Temporary BMP and Measures-Attachment D

These TBMP's shall be considered and followed:

Temporary silt fence, spoils area, construction entrance is installed and designated to protect natural streams, sensitive features, surface and ground water. These protection measures will be installed prior to start of any construction and shall be inspected after each rain and every week, any damaged areas shall be repaired or replaced if necessary. Remove siltation as required when siltation reaches ½ of its design depth or one foot. Inspect after each rain or every week.

When necessary, wheels must be cleaned to remove sediment prior to entrance onto public right of way. When washing is required, it shall be done on an area stabilized with crushed stone which drains into an approved sediment basin/trap. All sediment shall be prevented from entering any storm drain, ditch or watercourse using approved method.

A sediment trap will be constructed and inspected after each rainfall or every six (6) months.

Designate a spoil area (shown on plan) for handling waste, inspect and secure the silt fence to prevent pollution spills. This area will be graded toward the sediment trap for maximum pollution and sedimentation prevention.

Contractor's staging area and construction material is designated on plans. This area is enclosed with silt fence and inspected regularly. This area will be graded toward the sediment trap for maximum pollution and sedimentation prevention.

Designated washout area will also be enclosed with silt fence. This area will be graded toward the sediment trap for maximum pollution and sedimentation prevention.

Important factor in this area is to transport contaminated soil due to fuel and oil to spoil area frequently and as required by the city/TCEQ. This area is designated on plan and enclosed with silt fence.

All equipment will be washed in the designated area as shown on plan.

Silt fences will be inspected and properly maintained as required.

Gravel, stone, reinforcement bars for concrete foundation and retaining wall, sand, rock, construction equipment and/or any mechanical equipment will be stored on site.

A silt fence area adjacent to material storage area is set up for washout area where concrete mix trucks, will be washed and handled.

All equipment/vehicle fueling and discharge are handled within this area. In event of spills, contractor shall have sand and/or hay available on site to apply to the contaminated areas in order to contain and clean up possible spills. Contaminated sand shall be transported to the spoil area and disposed of off-site to a disposal site by the contractor.

Measures taken to prevent pollution: A construction exit/entrance will be installed to reduce tracking dirt on the pavement after exiting the construction area. Silt fences at critical locations are installed to reduce run-off velocity and retain sediments. All drainage inlets or culverts affected by this project's site activities shall be covered with silt fence, hay bale or rock berm.

a. Sensitive feature(s): During excavation or construction the Contractor shall stop work at the location where the sensitive feature is discovered and notify TCEQ and the Engineer preparing this report, for further inspection and evaluation to apply an appropriate BMP measure.

Sweetwater Lot 3B
Request to Seal a Feature-Attachment E

If required per Attachment D, a Request will be filed.

Sweetwater Lot 3B
Structural Practices- Attachment F

Silt Fence will be installed as shown on the plan, silt fence will be regularly checked and maintained per attachment D.

Sweetwater Lot 3B
Inspection and maintenance for BMP's- Attachment I

I) Maintenance Procedures

The Contractor will be responsible for ensuring maintenance of the erosion and sedimentation controls. Repairs will be made to damaged areas as soon as practicable after damage is discovered, but no later than seven (7) days after the inspection. Built-up sediment will be removed when the depth reached six inches.

Temporary and permanent seeding shall be irrigated or sprinkled in a manner that will not erode the topsoil but will sufficiently soak the soil to a depth of six inches. Irrigation shall occur at 10-day intervals during the first two months.

Rainfall of *1/2* inch or more shall postpone the watering schedule by one week.

II) Inspection Procedures

The Contractor will inspect the control measures weekly and within 24 hours after rainfall events on *½ inch* or more.

The Contractor will also be responsible for inspections, maintenance, and repair activities as well as preparing the inspection and maintenance forms. Major observations to be made during inspections include:

- Locations of discharges of sediment or other pollutants from the site.
- Locations of BMP's that need maintenance.
- Locations of BMP's that are not performing, failing to operate, or were inadequate.
- Locations where additional BMP's are needed.

III) Additional Maintenance Procedure

Keep necessary equipment's in working order ready for sediment/pollutant cleanup which may possibly escape the construction site and onto street, drainage inlets or streams.

All construction debris, litters shall be picked up and area cleaned on daily basis. All construction material and/or chemicals shall be stored in designate areas as shown on plan. Inspect all equipment on daily bases for potential leaks and repair as required.

Sweetwater Lot 3B
Inspection and maintenance for BMP's- Attachment I

Inspect all seeded areas for failures and reseed within planting season if necessary. (See below for more information).

Inspect on monthly basis. Maintain width and length and if required add rock to keep required thickness.

In event of spills, contractor shall have sand and/or hay available on site to apply to the contaminated areas in order to contain and clean up possible spills. Contaminated sand shall be transported to the spoil area and disposed of offsite to a disposal site by the contractor.

Sweetwater Lot 3B
Schedule of Interim and Permanent Soil Stabilization Practices- Attachment J

Disturbed areas including spoils disposal sites where construction activity temporarily ceases for at least 21 days will be stabilized with seeding and mulching by the 14th day after the last disturbance. Seeding shall be as follows:

1. Grasses:

Un-hulled Bermuda and Winter Rye from September 15 to March Hulled Bermuda from March 2 to September 14.

4. Application:

Broadcast seeding or hydro mulch

5. Fertilization:

Fertilization shall have an analysis of 15-15-15 and shall be applied at the rate of 1.5 pounds per 1,000 square feet.

6. **Mulch:**

Mulch type used shall be hay, straw, or mulch applied at a rate of 45 pounds per 1,000 square feet.

7. **Sprinkling:**

The planted area shall be irrigated or sprinkled in a manner that will not erode the topsoil but will sufficiently soak the soil to a depth of six inches. The irrigation shall occur at 10-day intervals during the first two months.

Rainfall occurrences of *½ inch* or more shall postpone the watering schedule for one week.

RECORD KEEPING:

Records will be retained for a minimum period of at least 3 years after the permit is terminated.

- The following is a list of records which will be kept at project site available for inspectors to review:
- Dates of grading, construction activity, and stabilization
- A copy of the construction general permit.
- The signed and certified NOI form or permit application form.
- A copy of the letter from EPA or/the state notifying their receipt of complete NOI/application.
- Inspection reports (attach)
- Records relating to endangered species and historic preservation, if required.

Agent Authorization Form
For Required Signature
Edwards Aquifer Protection Program
Relating to 30 TAC Chapter 213
Effective June 1, 1999

I David M. Cummings III,
Print Name

Member / Pres,
Title - Owner/President/Other

of Sweetwater Dorado, LLC,
Corporation/Partnership/Entity Name

have authorized Ahmed El Seweify
Print Name of Agent/Engineer

of AES Professional Services LLC.
Print Name of Firm

to represent and act on the behalf of the above named Corporation, Partnership, or Entity for the purpose of preparing and submitting this plan application to the Texas Commission on Environmental Quality (TCEQ) for the review and approval consideration of regulated activities.

I also understand that:

1. The applicant is responsible for compliance with 30 Texas Administrative Code Chapter 213 and any condition of the TCEQ's approval letter. The TCEQ is authorized to assess administrative penalties of up to $10,000 per day per violation.

2. For those submitting an application who are not the property owner, but who have the right to control and possess the property, additional authorization is required from the owner.

3. Application fees are due and payable at the time the application is submitted. The application fee must be sent to the TCEQ cashier or to the appropriate regional office. The application will not be considered until the correct fee is received by the commission.

4. A notarized copy of the Agent Authorization Form must be provided for the person preparing the application, and this form must accompany the completed application.

5. No person shall commence any regulated activity on the Edwards Aquifer Recharge Zone, Contributing Zone or Transition Zone until the appropriate application for the activity has been filed with and approved by the Executive Director.

SIGNATURE PAGE:

Applicant's Signature

10/27/25
Date

THE STATE OF Texas §

County of Bexar §

BEFORE ME, the undersigned authority, on this day personally appeared David M. Cunningham III known to me to be the person whose name is subscribed to the foregoing instrument, and acknowledged to me that (s)he executed same for the purpose and consideration therein expressed.

GIVEN under my hand and seal of office on this 27 day of October, 2025.

NOTARY PUBLIC

MARIVEL H. DEL TORO
My Notary ID # 10001801
Expires December 29, 2026

Marivel H. Del Toro
Typed or Printed Name of Notary

MY COMMISSION EXPIRES: 12/29/26

Application Fee Form

Texas Commission on Environmental Quality

Name of Proposed Regulated Entity: Sweetwater Lot 3B

Regulated Entity Location: 16620 Sweetwater Village Drive, Bee Cave Texas 78669

Name of Customer: Ahmed El Seweify

Contact Person: Ahmed El Seweify Phone: 512-785-9034

Customer Reference Number (if issued):CN _____

Regulated Entity Reference Number (if issued):RN _____

Austin Regional Office (3373)

☐ Hays ☒ Travis ☐ Williamson

San Antonio Regional Office (3362)

☐ Bexar ☐ Medina ☐ Uvalde

☐ Comal ☐ Kinney

Application fees must be paid by check, certified check, or money order, payable to the **Texas Commission on Environmental Quality**. Your canceled check will serve as your receipt. **This form must be submitted with your fee payment**. This payment is being submitted to:

☒ Austin Regional Office

☐ Mailed to: TCEQ - Cashier
Revenues Section
Mail Code 214
P.O. Box 13088
Austin, TX 78711-3088

☐ San Antonio Regional Office

☐ Overnight Delivery to: TCEQ - Cashier
12100 Park 35 Circle
Building A, 3rd Floor
Austin, TX 78753
(512)239-0357

Site Location (Check All That Apply):

☐ Recharge Zone ☒ Contributing Zone ☐ Transition Zone

Type of Plan	***Size***	***Fee Due***
Water Pollution Abatement Plan, Contributing Zone Plan: One Single Family Residential Dwelling	Acres	$
Water Pollution Abatement Plan, Contributing Zone Plan: Multiple Single Family Residential and Parks	3.093 Acres	$ 4,000.00
Water Pollution Abatement Plan, Contributing Zone Plan: Non-residential	Acres	$
Sewage Collection System	L.F.	$
Lift Stations without sewer lines	Acres	$
Underground or Aboveground Storage Tank Facility	Tanks	$
Piping System(s)(only)	Each	$
Exception	Each	$
Extension of Time	Each	$

Signature: Ahmed El Seweify Date: 02/19/2026

Application Fee Schedule

Texas Commission on Environmental Quality
Edwards Aquifer Protection Program 30 TAC Chapter 213 (effective 05/01/2008)

Water Pollution Abatement Plans and Modifications

Contributing Zone Plans and Modifications

Project	*Project Area in Acres*	*Fee*
One Single Family Residential Dwelling	< 5	$650
Multiple Single Family Residential and Parks	< 5 5 < 10 10 < 40 40 < 100 100 < 500 ≥ 500	$1,500 $3,000 $4,000 $6,500 $8,000 $10,000
Non-residential (Commercial, industrial, institutional, multi-family residential, schools, and other sites where regulated activities will occur)	< 1 1 < 5 5 < 10 10 < 40 40 < 100 ≥ 100	$3,000 $4,000 $5,000 $6,500 $8,000 $10,000

Organized Sewage Collection Systems and Modifications

Project	*Cost per Linear Foot*	*Minimum Fee-Maximum Fee*
Sewage Collection Systems	$0.50	$650 - $6,500

Underground and Aboveground Storage Tank System Facility Plans and Modifications

Project	*Cost per Tank or Piping System*	*Minimum Fee-Maximum Fee*
Underground and Aboveground Storage Tank Facility	$650	$650 - $6,500

Exception Requests

Project	*Fee*
Exception Request	$500

Extension of Time Requests

Project	*Fee*
Extension of Time Request	$150

TCEQ Core Data Form

TCEQ Use Only

For detailed instructions regarding completion of this form, please read the Core Data Form Instructions or call 512-239-5175.

SECTION I: General Information

1. Reason for Submission *(If other is checked please describe in space provided.)*

☒ New Permit, Registration or Authorization (*Core Data Form should be submitted with the program application.)*

☐ Renewal *(Core Data Form should be submitted with the renewal form)* ☐ Other

2. Customer Reference Number *(if issued)*	Follow this link to search for CN or RN numbers in Central Registry**	3. Regulated Entity Reference Number *(if issued)*
CN		RN

SECTION II: Customer Information

4. General Customer Information	5. Effective Date for Customer Information Updates (mm/dd/yyyy)	

☒ New Customer ☐ Update to Customer Information ☐ Change in Regulated Entity Ownership

☐ Change in Legal Name (Verifiable with the Texas Secretary of State or Texas Comptroller of Public Accounts)

The Customer Name submitted here may be updated automatically based on what is current and active with the Texas Secretary of State (SOS) or Texas Comptroller of Public Accounts (CPA).

6. Customer Legal Name *(If an individual, print last name first: eg: Doe, John)*	*If new Customer, enter previous Customer below:*
Sweetwater Dorado, LLC	

7. TX SOS/CPA Filing Number	8. TX State Tax ID (11 digits)	9. Federal Tax ID (9 digits)	10. DUNS Number *(if applicable)*
0806033813	32100149882	39-2115350	

11. Type of Customer:	☐ Corporation	☐ Individual	Partnership: ☐ General ☒ Limited
Government: ☐ City ☐ County ☐ Federal ☐ State ☐ Other		☐ Sole Proprietorship	☐ Other:

12. Number of Employees	13. Independently Owned and Operated?
☒ 0-20 ☐ 21-100 ☐ 101-250 ☐ 251-500 ☐ 501 and higher	☒ Yes ☐ No

14. Customer Role (Proposed or Actual) – *as it relates to the Regulated Entity listed on this form. Please check one of the following:*

☐ Owner ☐ Operator ☒ Owner & Operator

☐ Occupational Licensee ☐ Responsible Party ☐ Voluntary Cleanup Applicant ☐ Other:

15. Mailing Address:	19787 W IH-10, Suite 201						
	City	San Antonio	State	TX	ZIP	78257	ZIP + 4

16. Country Mailing Information *(if outside USA)*	17. E-Mail Address *(if applicable)*
	David@doradodev.com

18. Telephone Number	19. Extension or Code	20. Fax Number *(if applicable)*
(**210**) **732-5335**	**1**	(**210**)**732**-5445

SECTION III: Regulated Entity Information

21. General Regulated Entity Information *(If 'New Regulated Entity" is selected below this form should be accompanied by a permit application)*

☐ New Regulated Entity ☒ Update to Regulated Entity Name ☐ Update to Regulated Entity Information

The Regulated Entity Name submitted may be updated in order to meet TCEQ Agency Data Standards (removal of organizational endings such as Inc, LP, or LLC.)

22. Regulated Entity Name *(Enter name of the site where the regulated action is taking place.)*

Sweetwater Lot 3B

23. Street Address of the Regulated Entity: *(No PO Boxes)*	16620 Sweetwater Village DR.							
	City	Bee Cave	State	TX	ZIP	78669	ZIP + 4	
24. County	Travis							

Enter Physical Location Description if no street address is provided.

25. Description to Physical Location:	

26. Nearest City	State	Nearest ZIP Code

27. Latitude (N) In Decimal:			28. Longitude (W) In Decimal:		
Degrees	Minutes	Seconds	Degrees	Minutes	Seconds
30	19	00	98	00	16

29. Primary SIC Code (4 digits)	30. Secondary SIC Code (4 digits)	31. Primary NAICS Code (5 or 6 digits)	32. Secondary NAICS Code (5 or 6 digits)
1542		236220	

33. What is the Primary Business of this entity? *(Do not repeat the SIC or NAICS description.)*

MULTI-USE

34. Mailing Address:	16620 Sweetwater Village							
	City	Bee Cave	State	TX	ZIP	78738	ZIP + 4	

35. E-Mail Address:	**aelseweify@aesengineeringservices.com**

36. Telephone Number	37. Extension or Code	38. Fax Number *(if applicable)*
(512) 785-9034		( ) -

39. TCEQ Programs and ID Numbers Check all Programs and write in the permits/registration numbers that will be affected by the updates submitted on this form. See the Core Data Form instructions for additional guidance.

☐ Dam Safety	☐ Districts	☒ Edwards Aquifer	☐ Emissions Inventory Air	☐ Industrial Hazardous Waste
☐ Municipal Solid Waste	☐ New Source Review Air	☐ OSSF	☐ Petroleum Storage Tank	☐ PWS
☐ Sludge	☐ Storm Water	☐ Title V Air	☐ Tires	☐ Used Oil
☐ Voluntary Cleanup	☐ Waste Water	☐ Wastewater Agriculture	☐ Water Rights	☐ Other:

SECTION IV: Preparer Information

40. Name:	Ahmed El Seweify	41. Title:	Professional Engineer

42. Telephone Number	43. Ext./Code	44. Fax Number	45. E-Mail Address
(512) 785-9034		( ) -	

SECTION V: Authorized Signature

46. By my signature below, I certify, to the best of my knowledge, that the information provided in this form is true and complete, and that I have signature authority to submit this form on behalf of the entity specified in Section II, Field 6 and/or as required for the updates to the ID numbers identified in field 39.

Company:	AES PROFESSIONAL SERVICES LLC	Job Title:	Professional Engineer
Name*(In Print)* :	Ahmed El Seweify	Phone:	(512) 785-9034
Signature:	Ahmed El Seweify	Date:	02/21/2026