Administrative Package Cover Page

This file contains the following documents:

1. Summary of application (in plain language)
   - English
   - Alternative Language (Spanish)
2. First Notice (NORI-Notice of Receipt of Application and Intent to Obtain a Permit)
   - English
   - Alternative Language (Spanish)
3. Application materials

Portada de Paquete Administrativo

Este archivo contiene los siguientes documentos:

1. Resumen en lenguaje sencillo (PLS, por sus siglas en inglés) de la actividad propuesta
   - Inglés
   - Idioma alternativo (español)
2. Primer aviso (NORI, por sus siglas en inglés)
   - Inglés
   - Idioma alternativo (español)
3. Solicitud original

TEXAS COMMISSION ON ENVIRONMENTAL QUALITY

SUMMARY OF APPLICATION IN PLAIN LANGUAGE FOR TPDES OR TLAP PERMIT APPLICATIONS

Summary of Application (in plain language) Template and Instructions for Texas Pollutant Discharge Elimination System (TPDES) and Texas Land Application (TLAP) Permit Applications

Applicants should use this template to develop a plain language summary of your facility and application as required by Title 30, Texas Administrative Code (30 TAC), Chapter 39, Subchapter H. You may modify the template as necessary to accurately describe your facility as long as the summary includes the following information: (1) the function of the proposed plant or facility; (2) the expected output of the proposed plant or facility; (3) the expected pollutants that may be emitted or discharged by the proposed plant or facility; and (4) how you will control those pollutants, so that the proposed plant will not have an adverse impact on human health or the environment.

Fill in the highlighted areas below to describe your facility and application in plain language. Instructions and examples are provided below. Make any other edits necessary to improve readability or grammar and to comply with the rule requirements. After filling in the information for your facility delete these instructions.

If you are subject to the alternative language notice requirements in 30 TAC Section 39.426, **you must provide a translated copy of the completed plain language summary in the appropriate alternative language as part of your application package**. For your convenience, a Spanish template has been provided below.

ENGLISH TEMPLATE FOR TPDES or TLAP NEW/RENEWAL/AMENDMENT APPLICATIONS DOMESTIC WASTEWATER/STORMWATER

The following summary is provided for this pending water quality permit application being reviewed by the Texas Commission on Environmental Quality as required by 30 TAC Chapter 39. The information provided in this summary may change during the technical review of the application and is not a federal enforceable representation of the permit application.

The City of Lago Vista (CN600622849) operates the City of Lago Vista Wastewater Treatment Plant (RN101609683), a complete mixed activated sludge system with chlorine disinfection. The facility is located at 21011 Seminole Dr, in Lago Vista, Travis County, Texas 78645. The City is requesting a major amendment to its Texas Land Application Permit (TLAP No. WQ001752001) for the existing public wastewater supply system. The requested amendment would authorize the discharge of domestic wastewater at an annual average flow of effluent shall not exceed 1.0 MGD in the Interim Phase (Current) and 1.5 MGD in the Final Phase to accommodate anticipated growth and increased service requirements.This permit amendment will not authorize a discharge of pollutants into water in the state.

Discharges from the facility are expected to contain five-day carbonaceous biochemical oxygen demand (CBOD5), total suspended solids (TSS), ammonia nitrogen (NH3-N), Total Phosphorus (TP), Hydrogen Peroxide and Escherichia coli. Additional potential pollutants are

included in the Domestic Technical Report 1.0, Section 7. Pollutant Analysis of Treated Effluent in the permit application package. Domestic wastewater is treated by a complete mixed activated sludge system with treatment units including, headworks (bar screen and grit chamber), equalization basin, aeration basins, secondary clarifiers, chlorine contact chambers, and Parshall Flume. Waste sludge is thickened and dewatered by a belt filter press before being hauled off-site by a sludge truck.

PLANTILLA EN ESPAÑOL PARA SOLICITUDES NUEVAS/RENOVACIONES/ENMIENDAS DE TPDES o TLAP

AGUAS RESIDUALES DOMÉSTICAS /AGUAS PLUVIALES

El siguiente resumen se proporciona para esta solicitud de permiso de calidad del agua pendiente que está siendo revisada por la Comisión de Calidad Ambiental de Texas según lo requerido por el Capítulo 39 del Código Administrativo de Texas 30. La información proporcionada en este resumen puede cambiar durante la revisión técnica de la solicitud y no es una representación ejecutiva fedérale de la solicitud de permiso.

La cuidad de Lago Vista (CN600622849) opera Lago Vista Wastewater Treatment Plant (RN101609683), un sistema de lodo activado completamente mezclado con desinfección con cloro. La instalación está ubicada en 21011 Seminole Dr, en Lago Vista, Condado de Travis, Texas 78645. La cuidad de Lago Vista está solicitando una enmienda mayor a su permiso (TLAP No. WQ001752001) para el sistema público de aguas residuales existente. La enmienda solicitada autorizaría la descarga de aguas residuales domésticas con un flujo promedio anual de efluentes que no exceda 1.0 millones de galones por día (MGD) en la fase intermedia (actual) y 1.5 MGD en la fase final, con el fin de atender el crecimiento anticipado y el aumento en los requerimientos de servicio. Este permiso no autorizará una descarga de contaminantes en el agua en el estado.

Se espera que las descargas de la instalación contengan demanda bioquímica de oxígeno carbonáceo de cinco días, sólidos suspendidos totales, nitrógeno amoniacal, fósforo total, peróxido de hidrógeno y Escherichia coli. Contaminantes adicionales potenciales se incluyen en Domestic Technical Report 1.0, Section 7. Pollutant Analysis of Treated Effluent en el paquete de solicitud de permiso. Las aguas residuales domésticas. están tratado por por un sistema de lodo activado completamente mezclado con unidades de tratamiento que incluyen: obras de entrada (criba y cámara de arena), estanque de igualación, estanques de aireación, clarificadores secundarios, cámaras de contacto con cloro y flume Parshall. Los lodos residuales se espesan y deshidratan mediante un filtro prensa de banda antes de ser retirados con un camión de transporte de lodos.

TEXAS COMMISSION ON ENVIRONMENTAL QUALITY

NOTICE OF RECEIPT OF APPLICATION AND INTENT TO OBTAIN WATER QUALITY PERMIT AMENDMENT

PERMIT NO. WQ0011752001

APPLICATION. City of Lago Vista, 5803 Thunderbird, Lago Vista, Texas 78645, has applied to the Texas Commission on Environmental Quality (TCEQ) to amend Texas Land Application Permit (TLAP) No. WQ0011752001 to authorize an increase to the discharge of treated wastewater to a volume not to exceed a daily average flow of 1,500,000 gallons per day. The domestic wastewater treatment facility and disposal site are located at 21001 Seminole Drive, Lago Vista, in Travis County, Texas 78645. TCEQ received this application on July 2, 2025. The permit application will be available for viewing and copying at Lago Vista City Hall, 5803 Thunderbird, Lago Vista, in Travis County, Texas prior to the date this notice is published in the newspaper. The application, including any updates, and associated notices are available electronically at the following webpage: https://www.tceq.texas.gov/permitting/wastewater/pending-permits/tlap-applications. This link to an electronic map of the site or facility's general location is provided as a public courtesy and not part of the application or notice. For the exact location, refer to the application. https://gisweb.tceq.texas.gov/LocationMapper/?marker=-97.998611,30.451388&level=18

ALTERNATIVE LANGUAGE NOTICE. Alternative language notice in Spanish is available at: https://www.tceq.texas.gov/permitting/wastewater/pending-permits/tlap-applications. El aviso de idioma alternativo en español está disponible en https://www.tceq.texas.gov/permitting/wastewater/pending-permits/tlap-applications.

ADDITIONAL NOTICE. TCEQ's Executive Director has determined the application is administratively complete and will conduct a technical review of the application. After technical review of the application is complete, the Executive Director may prepare a draft permit and will issue a preliminary decision on the application. **Notice of the Application and Preliminary Decision will be published and mailed to those who are on the county-wide mailing list and to those who are on the mailing list for this application. That notice will contain the deadline for submitting public comments.**

PUBLIC COMMENT / PUBLIC MEETING. You may submit public comments or request a public meeting on this application. The purpose of a public meeting is to provide the opportunity to submit comments or to ask questions about the application. TCEQ will hold a public meeting if the Executive Director determines that there is a significant degree of public interest in the application or if requested by a local legislator. A public meeting is not a contested case hearing.

OPPORTUNITY FOR A CONTESTED CASE HEARING. After the deadline for submitting public comments, the Executive Director will consider all timely comments and prepare a response to all relevant and material, or significant public comments. **Unless the application is directly referred for a contested case hearing, the response to comments, and the Executive Director's decision on the application, will be mailed to everyone who submitted public comments and to those persons who are on the mailing list for this application. If comments are received, the mailing will also provide instructions for requesting reconsideration of the Executive Director's decision and for requesting a contested case hearing.** A contested case hearing is a legal proceeding similar to a civil trial in state district court.

TO REQUEST A CONTESTED CASE HEARING, YOU MUST INCLUDE THE FOLLOWING ITEMS IN YOUR REQUEST: your name, address, phone number; applicant's name and proposed permit number; the location and distance of your property/activities relative to the proposed facility; a specific description of how you would be adversely affected by the facility in a way not common to the general public; a list of all disputed issues of fact that you submit during the comment period and, the statement "[I/we] request a contested case hearing." If the request for contested case hearing is filed on behalf of a group or association, the request must designate the group's representative for receiving future correspondence; identify by name and physical address an individual member of the group who would be adversely affected by the proposed facility or activity; provide the information discussed above regarding the affected member's location and distance from the facility or activity; explain how and why the member would be affected; and explain how the interests the group seeks to protect are relevant to the group's purpose.

Following the close of all applicable comment and request periods, the Executive Director will forward the application and any requests for reconsideration or for a contested case hearing to the TCEQ Commissioners for their consideration at a scheduled Commission meeting.

The Commission may only grant a request for a contested case hearing on issues the requestor submitted in their timely comments that were not subsequently withdrawn. **If a hearing is granted, the subject of a hearing will be limited to disputed issues of fact or mixed questions of fact and law relating to relevant and material water quality concerns submitted during the comment period.**

MAILING LIST. If you submit public comments, a request for a contested case hearing or a reconsideration of the Executive Director's decision, you will be added to the mailing list for this specific application to receive future public notices mailed by the Office of the Chief Clerk. In addition, you may request to be placed on: (1) the permanent mailing list for a specific applicant name and permit number; and/or (2) the mailing list for a specific county. If you wish to be placed on the permanent and/or the county mailing list, clearly specify which list(s) and send your request to TCEQ Office of the Chief Clerk at the address below.

INFORMATION AVAILABLE ONLINE. For details about the status of the application, visit the Commissioners' Integrated Database at www.tceq.texas.gov/goto/cid. Search the database using the permit number for this application, which is provided at the top of this notice.

AGENCY CONTACTS AND INFORMATION. All public comments and requests must be submitted either electronically at **https://www14.tceq.texas.gov/epic/eComment/**, or in writing to the Texas Commission on Environmental Quality, Office of the Chief Clerk, MC-105,

P.O. Box 13087, Austin, Texas 78711-3087. Please be aware that any contact information you provide, including your name, phone number, email address and physical address will become part of the agency's public record. For more information about this permit application or the permitting process, please call the TCEQ Public Education Program, Toll Free, at 1-800-687-4040 or visit their website at www.tceq.texas.gov/goto/pep. Si desea información en Español, puede llamar al 1-800-687-4040.

Further information may also be obtained from City of Lago Vista at the address stated above or by calling Mr. Charles West, City Manager, at 512-267-1155 ext. 100.

Issuance Date: September 10, 2025

Comisión de Calidad Ambiental del Estado de Texas

AVISO DE RECIBO DE LA SOLICITUD y
INTENCION DE OBTENER PERMISO PARA LA CALIDAD DEL AGUA
MODIFICACION

PERMISO NO. WQ0011752001

SOLICITUD. La cuidad de Lago Vista, 5803 Thunderbird, Lago Vista, Texas 78645, ha solicitado a la Comisión de Calidad Ambiental de Texas (TCEQ) para modificar el Permiso No. WQ0011752001 de disposición de aguas residuales para autorizar un aumento en la descarga de aguas residuales tratadas a un volumen que no exceda un flujo promedio diario de 1,500,000 galones por día. La planta y el área de disposición están ubicados en 21001 Seminole Drive, Lago Vista, en el Condado de Travis, Texas 78645. La TCEQ recibió esta solicitud el 2 de julio del 2025. La solicitud para el permiso estará disponible para leerla y copiarla en Lago Vista City Hall, 5803 Thunderbird, Lago Vista, en el condado de Travis, Texas antes de la fecha de publicación de este aviso en el periódico. La solicitud (cualquier actualización y aviso inclusive) está disponible electrónicamente en la siguiente página web: https://www.tceq.texas.gov/permitting/wastewater/pending-permits/tlap-applications. Este enlace a un mapa electrónico de la ubicación general del sitio o de la instalación es proporcionado como una cortesía y no es parte de la solicitud o del aviso. Para la ubicación exacta, consulte la solicitud.
https://gisweb.tceq.texas.gov/LocationMapper/?marker=-97.998611,30.451388&level=18

AVISO DE IDIOMA ALTERNATIVO. El aviso de idioma alternativo en español está disponible en https://www.tceq.texas.gov/permitting/wastewater/pending-permits/tlap-applications.

AVISO ADICIONAL. El Director Ejecutivo de la TCEQ ha determinado que la solicitud es administrativamente completa y conducirá una revisión técnica de la solicitud. Después de completar la revisión técnica, el Director Ejecutivo puede preparar un borrador del permiso y emitirá una Decisión Preliminar sobre la solicitud. **El aviso de la solicitud y la decisión preliminar serán publicados y enviado a los que están en la lista de correo de las personas a lo largo del condado que desean recibir los avisos y los que están en la lista de correo que desean recibir avisos de esta solicitud. El aviso dará la fecha límite para someter comentarios públicos.**

COMENTARIO PUBLICO / REUNION PUBLICA. Usted puede presentar comentarios públicos o pedir una reunión pública sobre esta solicitud. El propósito de una reunión pública es dar la oportunidad de presentar comentarios o hacer preguntas acerca de la solicitud. La TCEQ realiza una reunión pública si el Director Ejecutivo determina que hay un grado de interés público suficiente en la solicitud o si un legislador local lo pide. Una reunión pública no es una audiencia administrativa de lo contencioso.

OPORTUNIDAD DE UNA AUDIENCIA ADMINISTRATIVA DE LO CONTENCIOSO. Después del plazo para presentar comentarios públicos, el Director Ejecutivo considerará todos los comentarios apropiados y preparará una respuesta a todo los comentarios públicos esenciales, pertinentes, o significativos. **A menos que la solicitud haya sido referida directamente a una audiencia administrativa de lo contencioso, la respuesta a los comentarios y la decisión del Director Ejecutivo sobre la solicitud serán enviados por correo a todos los que presentaron un comentario público y a las personas que están en la lista para recibir avisos sobre esta solicitud. Si se reciben comentarios, el aviso también proveerá instrucciones para pedir una reconsideración de la decisión del Director Ejecutivo y para pedir una audiencia administrativa de lo contencioso.** Una audiencia administrativa de lo contencioso es un procedimiento legal similar a un procedimiento legal civil en un tribunal de distrito del estado.

PARA SOLICITAR UNA AUDIENCIA DE CASO IMPUGNADO, USTED DEBE INCLUIR EN SU SOLICITUD LOS SIGUIENTES DATOS: su nombre, dirección, y número de teléfono; el nombre del solicitante y número del permiso; la ubicación y distancia de su propiedad/actividad con respecto a la instalación; una descripción específica de la forma cómo usted sería afectado adversamente por el sitio de una manera no común al público en general; una lista de todas las cuestiones de hecho en disputa que usted presente durante el período de comentarios; y la declaración "[Yo/nosotros] solicito/solicitamos una audiencia de caso impugnado". Si presenta la petición para una audiencia de caso impugnado de parte de un grupo o asociación, debe identificar una persona que representa al grupo para recibir correspondencia en el futuro; identificar el nombre y la dirección de un miembro del grupo que sería afectado adversamente por la planta o la actividad propuesta; proveer la información indicada anteriormente con respecto a la ubicación del miembro afectado y su distancia de la planta o actividad propuesta; explicar cómo y porqué el miembro sería afectado; y explicar cómo los intereses que el grupo desea proteger son pertinentes al propósito del grupo.

Después del cierre de todos los períodos de comentarios y de petición que aplican, el Director Ejecutivo enviará la solicitud y cualquier petición para reconsideración o para una audiencia de caso impugnado a los Comisionados de la TCEQ para su consideración durante una reunión programada de la Comisión.

La Comisión sólo puede conceder una solicitud de una audiencia de caso impugnado sobre los temas que el solicitante haya presentado en sus comentarios oportunos que no fueron retirados posteriormente. **Si se concede una audiencia, el tema de la audiencia estará limitado a cuestiones de hecho en disputa o cuestiones mixtas de hecho y de derecho relacionadas a intereses pertinentes y materiales de calidad del agua que se hayan presentado durante el período de comentarios.**

LISTA DE CORREO. Si somete comentarios públicos, un pedido para una audiencia administrativa de lo contencioso o una reconsideración de la decisión del Director Ejecutivo, la Oficina del Secretario Principal enviará por correo los avisos públicos en relación con la solicitud. Además, puede pedir que la TCEQ ponga su nombre en una o más de las listas correos siguientes (1) la lista de correo permanente para recibir los avisos del solicitante indicado por nombre y número del permiso específico y/o (2) la lista de correo de todas las solicitudes en un condado especifico. Si desea que se agrega su nombre en una de las listas

designe cual lista(s) y envía por correo su pedido a la Oficina del Secretario Principal de la TCEQ.

INFORMACIÓN DISPONIBLE EN LÍNEA. Para detalles sobre el estado de la solicitud, favor de visitar la Base de Datos Integrada de los Comisionados en www.tceq.texas.gov/goto/cid. Para buscar en la base de datos, utilizar el número de permiso para esta solicitud que aparece en la parte superior de este aviso.

CONTACTOS E INFORMACIÓN A LA AGENCIA. Todos los comentarios públicos y solicitudes deben ser presentadas electrónicamente vía http://www14.tceq.texas.gov/epic/eComment/ o por escrito dirigidos a la Comisión de Texas de Calidad Ambiental, Oficial de la Secretaría (Office of Chief Clerk), MC-105, P.O. Box 13087, Austin, Texas 78711-3087. Tenga en cuenta que cualquier información personal que usted proporcione, incluyendo su nombre, número de teléfono, dirección de correo electrónico y dirección física pasarán a formar parte del registro público de la Agencia. Para obtener más información acerca de esta solicitud de permiso o el proceso de permisos, llame al programa de educación pública de la TCEQ, gratis, al 1-800-687-4040. Si desea información en Español, puede llamar al 1-800-687-4040.

También se puede obtener información adicional de la cuidad de Lago Vista a la dirección indicada arriba o llamando a Charles West al 512-267-1155.

Fecha de emisión: 10 de septiembre de 2025

Lago Vista Wastewater Treatment Plant Expansion

Permit No. WQ0011752001
Texas Land Application Permit (TLAP) Major Amendment

PREPARED FOR

City of Lago Vista

July 2025

CITY OF
LAGO VISTA
TEXAS

GARVER
810 Hesters Crossing
Suite 210
Round Rock, TX 78681
TEL 512.485.0020
FAX 512.485.0021
www.GarverUSA.com

July 2, 2025

Texas Commission on Environmental Quality
Applications Review and Processing Team
Building F, Room 2101
12100 Park 35 Circle
Austin, TX 78753

Re: City of Lago Vista Wastewater Treatment Plant (WWTP) Permit No.: WQ0011752001
Texas Land Application Permit (TLAP) Major Amendment

Dear Texas Commission on Environmental Quality:

The enclosed application and supporting documents for major amendment of the above-referenced permit are submitted for the Commission's review and processing. The documents have been prepared by Garver, an independent consultant retained by the City of Lago Vista (Owner).

The existing permit for the City of Lago Vista WWTP includes three phases: Interim I, Interim II and Final with average annual design flows (AADF) of 0.6, 0.75 and 1.0 million gallons per day (MGD), respectively. The WWTP currently operating at or below 0.75 MGD, with a design capacity of 1 MGD. The proposed amendment includes two phases: **Interim/Existing** with an AADF of **1.0 MGD** and **Final** with an AADF of **1.5 MGD**. The facility is a no-discharge system, and sewage sludge is transported to a permitted sludge processing facility.

The existing permit has a 10-year authorization term, expiring March 11, 2030. As the WWTP is a no-discharge facility with a Texas Land Application Permit (TLAP), the proposed amendment allows continued operation until the current permit’s expiration, with additional land area and storage volume to meet the 1.5 MGD expansion requirements. We respectfully request that the Commission authorize the proposed improvements for the duration of the permit term.

The payment of the permit major amendment application fee has been mailed separately to the Commission by the Owner. Please contact me at 512-539-1972 or AJain@GarverUSA.com if you have any questions or comments.

Sincerely,

GARVER

Ankita Jain. P.E.
Assistant Project Manager

Attachments: One original and one digital copy of the permit major amendment application for review.

GARVER
810 Hesters Crossing
Suite 210
Round Rock, TX 78681
TEL 512.485.0020
FAX 512.485.0021
www.GarverUSA.com

July 2, 2025

Texas Commission on Environmental Quality (TCEQ)
Applications Review and Processing Team
Building F, Room 2101
12100 Park 35 Circle
Austin, TX 78753

Re: City of Lago Vista Wastewater Treatment Plant (WWTP) Permit No.: WQ0011752001
Texas Land Application Permit (TLAP) Major Amendment

Subject: Justification for No Additional Storage Requirement – 1.5 MGD Plant Expansion Scenario

To Municipal Permits Team,

We are submitting this justification based on water balance and storage calculations performed in accordance with 30 TAC §309.20(b)(3)(B) for the proposed 1.5 MGD expansion of the Lago Vista WWTP.

The facility is currently designed for 1.0 MGD but is operating below 0.75 MGD, with the highest recorded flow being 0.69 MGD in July 2023. Please refer to the DMR/MOR data from 2023–2025 included with the application for reference. Under the current permit, for flows at or below 0.75 MGD, the required treated effluent storage capacity is **103.4 ac-ft**. The City currently has **117.1 ac-ft** (38.2 MG) of available storage. After the rehabilitation of Ponds #17, #2, and #14, the total storage capacity will increase to **130.90 ac-ft** (42.7 MG). All rehabilitation work began in April 2025 and will be completed prior to the WWTP expansion.

Available Storage Volume Summary

Storage	Surface Area (acres)	Volume (MG)	Volume (acre-feet)
Pond 17 (Repair - begins April 2025)	3.2	13.8	42.4
Pond 14 (Repair - design phase)	0.75	0.67	2.1
Pond 2 (Existing)	1.85	3.8	11.7
Pond 2 (reconstruction - begins April 2025)	1.85	8.3	25.5
Cedar Breaks Pond	5.57	19.9	61
Existing Storage (Total)	**11.4**	**38.2**	**117.1**
Post Improvements Storage (Total)	**11.4**	**42.7**	**130.9**

For the 1.5 MGD expansion, the City will utilize 140 acres of the Lago Vista Golf Course and 190 acres of cedar-covered land, applying TCEQ-approved HARs of 3.45 and 6.37 ac-ft/acre/year, respectively. The full 1.5 MGD will be applied across the 330-acre permitted area. In addition, the City has infrastructure in place to deliver up to 0.5 MGD of Type 2 reclaimed water to the adjacent Highland's Golf Course, which spans over 100 acres. This additional application area will help manage pond levels effectively and provide buffer capacity during wet weather periods. A confirmation letter from Highland's Golf Course is attached for reference.

The current permit specifies a storage requirement of **170.4 ac-ft (55 MG)** for a 1.0 MGD flow, based on a conservative rule-of-thumb estimate of 50–60 days of storage. For this amendment, the City conducted a detailed water balance and storage analysis to determine a more accurate and realistic storage volume. Based on our calculations, which were completed using the TCEQ storage calculation method, the required storage volume for the 1.5 MGD expansion **is 434.7 ac-ft (141.6 MG**). This volume is significantly higher than practical needs and is considered unrealistic, cost-prohibitive, and excessive.

Storage Requirements based on the 30 TAC 309.20

Permit Scenario	**0.75 MGD (Existing)**	**1 MGD (Existing)**	**1.5 MGD (Proposed)**
Land Area Applied	**140 acres of GC and 60 acres of Cedar Trees**	**140 acres of GC and 100 acres of Cedar Trees**	**140 acres of GC and 190 acres of Cedar Trees**
Storage volume for Golf Course (ac-ft)	-	-	57.22
Storage volume for Cedar Trees (ac-ft)	-	-	377.48
Total Storage Volume Required (Per Calculations, ac-ft)	**Not submitted previously**	**Not submitted previously**	**434.7**
Total Storage Volume Required (Per Permit, ac-ft)	**103.4**	**170.4**	**TBD**
Total Available Storage Volume (ac-ft)	**117.1**	**117.1**	**130.9**
Total Available Storage Volume (MG)	38.16	38.16	42.66

In a discussion with TCEQ on April 8, 2025, TCEQ confirmed and agreed to reduce the required storage from **170.4 ac-ft to 130.9 ac-ft** for flows up to 1.5 MGD. This reduction accounts for up to 0.5 MGD being diverted for reuse at a neighboring golf course, eliminating the need for additional storage at this time. The City remains committed to constructing an additional pond if the WWTP expands beyond 1.5 MGD in the future.

For reference, to perform the calculations as per 30 TAC §309.20(b)(3)(B), we applied the following assumptions:

1. Utilized 25 years of historical data for precipitation and net evaporation.
2. Applied seasonal variations in the application rates.
3. Considered maximum rainfall and minimum evaporation conditions.
4. Assumed SCS runoff curve numbers (CN):
    - Bermuda grass (Golf course land): 74
    - Cedar Trees area: 89 (per soil sampling report)
5. Irrigation efficiency of 85%
6. Utilized maximum effluent applied to the land and TCEQ-provided HAR as deemed appropriate per 30 TAC §309.20(b)(3)(B).

We appreciate your review and consideration of this justification. Please contact me at 512-539-1972 or AJain@GarverUSA.com if you have any questions or comments.

Sincerely,

GARVER

Ankita Jain. P.E.
Assistant Project Manager

Attachments:

1. Attachment T – Monthly Effluent Reports (2023-2025)
2. Attachment X – Water Balance and Storage Calculations
3. Attachment Y – Highland Lake's Golf Course Reuse Confirmation Letter

TEXAS COMMISSION ON ENVIRONMENTAL QUALITY

DOMESTIC WASTEWATER PERMIT APPLICATION CHECKLIST

Complete and submit this checklist with the application.

APPLICANT NAME: City of Lago Vista

PERMIT NUMBER (If new, leave blank): WQ00 11752001

Indicate if each of the following items is included in your application.

	Y	N		Y	N
Administrative Report 1.0	☒	☐	Original USGS Map	☒	☐
Administrative Report 1.1	☐	☒	Affected Landowners Map	☐	☒
SPIF	☐	☒	Landowner Disk or Labels	☐	☒
Core Data Form	☒	☐	Buffer Zone Map	☐	☒
Public Involvement Plan Form	☒	☐	Flow Diagram	☒	☐
Technical Report 1.0	☒	☐	Site Drawing	☒	☐
Technical Report 1.1	☐	☒	Original Photographs	☐	☒
Worksheet 2.0	☐	☒	Design Calculations	☐	☒
Worksheet 2.1	☐	☒	Solids Management Plan	☐	☒
Worksheet 3.0	☒	☐	Water Balance	☒	☐
Worksheet 3.1	☒	☐			
Worksheet 3.2	☐	☒			
Worksheet 3.3	☐	☒			
Worksheet 4.0	☐	☒			
Worksheet 5.0	☐	☒			
Worksheet 6.0	☒	☐			
Worksheet 7.0	☐	☒			

For TCEQ Use Only

Segment Number _____County _____
Expiration Date _____Region_____
Permit Number _____

TEXAS COMMISSION ON ENVIRONMENTAL QUALITY

DOMESTIC WASTEWATER PERMIT APPLICATION ADMINISTRATIVE REPORT 1.0

For any questions about this form, please contact the Applications Review and Processing Team at 512-239-4671.

Section 1. Application Fees (Instructions Page 26)

Indicate the amount submitted for the application fee (check only one).

Flow	New/Major Amendment	Renewal
<0.05 MGD	$350.00 ☐	$315.00 ☐
≥0.05 but <0.10 MGD	$550.00 ☐	$515.00 ☐
≥0.10 but <0.25 MGD	$850.00 ☐	$815.00 ☐
≥0.25 but <0.50 MGD	$1,250.00 ☐	$1,215.00 ☐
≥0.50 but <1.0 MGD	$1,650.00 ☐	$1,615.00 ☐
≥1.0 MGD	$2,050.00 ☒	$2,015.00 ☐

Minor Amendment (for any flow) $150.00 ☐

Payment Information:

Mailed — Check/Money Order Number: 61994

Check/Money Order Amount: $2,050.00

Name Printed on Check: Texas Commission on Environmental Quality

EPAY — Voucher Number: N/A

Copy of Payment Voucher enclosed? Yes ☐ N/A

For Payment Photocopy, See Attachment V.

Section 2. Type of Application (Instructions Page 26)

a. Check the box next to the appropriate authorization type.

☒ Publicly-Owned Domestic Wastewater

☐ Privately-Owned Domestic Wastewater

☐ Conventional Wastewater Treatment

b. Check the box next to the appropriate facility status.

☒ Active ☐ Inactive

c. Check the box next to the appropriate permit type.

- ☐ TPDES Permit
- ☒ TLAP
- ☐ TPDES Permit with TLAP component
- ☐ Subsurface Area Drip Dispersal System (SADDS)

d. Check the box next to the appropriate application type

- ☐ New
- ☐ Major Amendment *with* Renewal
- ☒ Major Amendment *without* Renewal
- ☐ Renewal without changes
- ☐ Minor Amendment *with* Renewal
- ☐ Minor Amendment *without* Renewal
- ☐ Minor Modification of permit

e. For amendments or modifications, describe the proposed changes: The proposed changes involve expanding Lago Vista WWTF's capacity from 1.0 MGD to 1.5 MGD. This expansion will enhance the facility's ability to handle increased wastewater flow, improving overall treatment capacity, and supporting future growth in the area.

f. For existing permits:

Permit Number: WQ00 11752001

EPA I.D. (TPDES only): TX N/A

Expiration Date: March 11, 2030

Section 3. Facility Owner (Applicant) and Co-Applicant Information (Instructions Page 26)

A. The owner of the facility must apply for the permit.

What is the Legal Name of the entity (applicant) applying for this permit?

City of Lago Vista

(The legal name must be spelled exactly as filed with the Texas Secretary of State, County, or in the legal documents forming the entity.)

If the applicant is currently a customer with the TCEQ, what is the Customer Number (CN)? You may search for your CN on the TCEQ website at http://www15.tceq.texas.gov/crpub/

CN: 600622849

What is the name and title of the person signing the application? The person must be an executive official meeting signatory requirements in *30 TAC § 305.44*.

Prefix: Mr. Last Name, First Name: West, Charles

Title: City Manager Credential: N/A

B. Co-applicant information. Complete this section only if another person or entity is required to apply as a co-permittee.

What is the Legal Name of the co-applicant applying for this permit?

N/A

(The legal name must be spelled exactly as filed with the TX SOS, with the County, or in the legal documents forming the entity.)

If the co-applicant is currently a customer with the TCEQ, what is the Customer Number (CN)? You may search for your CN on the TCEQ website at: http://www15.tceq.texas.gov/crpub/

CN: N/A

What is the name and title of the person signing the application? The person must be an executive official meeting signatory requirements in *30 TAC § 305.44*.

Prefix: N/A Last Name, First Name: N/A

Title: N/A Credential: N/A

Provide a brief description of the need for a co-permittee: N/A

C. Core Data Form

Complete the Core Data Form for each customer and include as an attachment. If the customer type selected on the Core Data Form is **Individual**, complete **Attachment 1** of Administrative Report 1.0. See Attachment A.

Section 4. Application Contact Information (Instructions Page 27)

This is the person(s) TCEQ will contact if additional information is needed about this application. Provide a contact for administrative questions and technical questions.

A. Prefix: Mrs. Last Name, First Name: Jain, Ankita

Title: Assistant Project Manager Credential: P.E.

Organization Name: Garver

Mailing Address: 810 Hesters Crossing, Ste 210 City, State, Zip Code: Round Rock, TX 78681

Phone No.: 512-539-1972 E-mail Address: AJain@GarverUSA.com

Check one or both: ☐ Administrative Contact ☒ Technical Contact

B. Prefix: Mr. Last Name, First Name: West, Charles

Title: City Manager Credential: N/A

Organization Name: City of Lago Vista

Mailing Address: 5803 Thunderbird St City, State, Zip Code: Lago Vista, TX 78645

Phone No.: 512-267-1155, ext. 100 E-mail Address: charles.west@lagovistatexas.gov

Check one or both: ☒ Administrative Contact ☐ Technical Contact

Section 5. Permit Contact Information (Instructions Page 27)

Provide the names and contact information for two individuals that can be contacted throughout the permit term.

A. Prefix: Mr. Last Name, First Name: West, Charles

Title: City Manager Credential: N/A

Organization Name: City of Lago Vista

Mailing Address: 5803 Thunderbird Street City, State, Zip Code: Lago Vista, TX 78645

Phone No.: 512-267-1155, ext. 100 E-mail Address: charles.west@lagovistatexas.gov

B. Prefix: Mr. Last Name, First Name: Manzano, Victor

Title: CIP Manager Credential: N/A

Organization Name: City of Lago Vista

Mailing Address: 5803 Thunderbird Street City, State, Zip Code: Lago Vista, TX 78645

Phone No.: 512-267-1155 E-mail Address: victor.manzano@lagovistatexas.gov

Section 6. Billing Contact Information (Instructions Page 27)

The permittee is responsible for paying the annual fee. The annual fee will be assessed to permits ***in effect on September 1 of each year***. The TCEQ will send a bill to the address provided in this section. The permittee is responsible for terminating the permit when it is no longer needed (using form TCEQ-20029).

Prefix: Mr. Last Name, First Name: West, Charles

Title: City Manager Credential: N/A

Organization Name: City of Lago Vista

Mailing Address: 5803 Thunderbird Street City, State, Zip Code: Lago Vista, TX 78645

Phone No.: 512-267-1155, ext. 100 E-mail Address: charles.west@lagovistatexas.gov

Section 7. DMR/MER Contact Information (Instructions Page 27)

Provide the name and complete mailing address of the person delegated to receive and submit Discharge Monitoring Reports (DMR) (EPA 3320-1) or maintain Monthly Effluent Reports (MER).

Prefix: Mr. Last Name, First Name: Munoz, Jose

Title: WWTP Operator Credential: N/A

Organization Name: City of Lago Vista

Mailing Address: 5803 Thunderbird Street City, State, Zip Code: Lago Vista, TX 78645

Phone No.: 512-267-1155 E-mail Address: Jose.Munoz@lagovistatexas.gov

Section 8. Public Notice Information (Instructions Page 27)

A. Individual Publishing the Notices

Prefix: Mr. Last Name, First Name: West, Charles

Title: City Manager Credential: N/A

Organization Name: City of Lago Vista

Mailing Address: 5803 Thunderbird Street City, State, Zip Code: Lago Vista, TX 78645

Phone No.: 512-267-1155, ext. 100 E-mail Address: charles.west@lagovistatexas.gov

B. Method for Receiving Notice of Receipt and Intent to Obtain a Water Quality Permit Package

Indicate by a check mark the preferred method for receiving the first notice and instructions:

☒ E-mail Address

☐ Fax

☒ Regular Mail

C. Contact permit to be listed in the Notices

Prefix: Mr. Last Name, First Name: West, Charles

Title: City Manager Credential: N/A

Organization Name: City of Lago Vista

Mailing Address: 5803 Thunderbird Street City, State, Zip Code: Lago Vista, TX 78645

Phone No.: 512-267-1155, ext. 100 E-mail Address: charles.west@lagovistatexas.gov

D. Public Viewing Information

If the facility or outfall is located in more than one county, a public viewing place for each county must be provided.

Public building name: Lago Vista City Hall

Location within the building: N/A

Physical Address of Building: 5803 Thunderbird Street

City: Lago Vista, TX County: Travis

Contact (Last Name, First Name): West, Charles

Phone No.: 512-267-1155 Ext.: 100

E. Bilingual Notice Requirements

This information **is required** for **new, major amendment, minor amendment or minor modification, and renewal** applications.

This section of the application is only used to determine if alternative language notices will be needed. Complete instructions on publishing the alternative language notices will be in your public notice package.

Please call the bilingual/ESL coordinator at the nearest elementary and middle schools and obtain the following information to determine whether an alternative language notices are required.

1. Is a bilingual education program required by the Texas Education Code at the elementary or middle school nearest to the facility or proposed facility?

   ☒ Yes ☐ No

   If **no**, publication of an alternative language notice is not required; **skip to** Section 9 below.

2. Are the students who attend either the elementary school or the middle school enrolled in a bilingual education program at that school?

   ☒ Yes ☐ No

3. Do the students at these schools attend a bilingual education program at another location?

   ☐ Yes ☒ No

4. Would the school be required to provide a bilingual education program but the school has waived out of this requirement under 19 TAC §89.1205(g)?

   ☐ Yes ☒ No

5. If the answer is **yes** to **question 1, 2, 3, or 4**, public notices in an alternative language are required. Which language is required by the bilingual program? Spanish

F. Plain Language Summary Template

Complete the Plain Language Summary (TCEQ Form 20972) and include as an attachment.

Attachment: See Attachment C.

G. Public Involvement Plan Form

Complete the Public Involvement Plan Form (TCEQ Form 20960) for each application for a **new permit or major amendment to a permit** and include as an attachment.

Attachment: See Attachment D.

Section 9. Regulated Entity and Permitted Site Information (Instructions Page 29)

A. If the site is currently regulated by TCEQ, provide the Regulated Entity Number (RN) issued to this site. **RN** 101609683

Search the TCEQ's Central Registry at http://www15.tceq.texas.gov/crpub/ to determine if the site is currently regulated by TCEQ.

B. Name of project or site (the name known by the community where located):

City of Lago Vista Wastewater Treatment Facility

C. Owner of treatment facility: City of Lago Vista

Ownership of Facility: ☒ Public ☐ Private ☐ Both ☐ Federal

D. Owner of land where treatment facility is or will be:

Prefix: N/A Last Name, First Name: N/A

Title: N/A Credential: N/A

Organization Name: City of Lago Vista

Mailing Address: 5803 Thunderbird Drive City, State, Zip Code: Lago Vista, TX, 78645

Phone No.: 512-599-4179 E-mail Address: N/A

If the landowner is not the same person as the facility owner or co-applicant, attach a lease agreement or deed recorded easement. See instructions.

Attachment: N/A

E. Owner of effluent disposal site:

Prefix: N/A Last Name, First Name: N/A

Title: N/A Credential: N/A

Organization Name: City of Lago Vista

Mailing Address: 5803 Thunderbird Drive City, State, Zip Code: Lago Vista, TX, 78645

Phone No.: 512-599-4179 E-mail Address: N/A

If the landowner is not the same person as the facility owner or co-applicant, attach a lease agreement or deed recorded easement. See instructions.

Attachment: N/A

F. Owner sewage sludge disposal site (if authorization is requested for sludge disposal on property owned or controlled by the applicant)::

Prefix: N/A Last Name, First Name: N/A

Title: N/A Credential: N/A

Organization Name: N/A

Mailing Address: N/A City, State, Zip Code: N/A

Phone No.: N/A E-mail Address: N/A

If the landowner is not the same person as the facility owner or co-applicant, attach a lease agreement or deed recorded easement. See instructions.

Attachment: N/A

Section 10. TPDES Discharge Information (Instructions Page 31)

A. Is the wastewater treatment facility location in the existing permit accurate?

☒ Yes ☐ No

If **no**, **or a new permit application**, please give an accurate description:

N/A

B. Are the point(s) of discharge and the discharge route(s) in the existing permit correct?

☒ Yes ☐ No

If **no**, **or a new or amendment permit application**, provide an accurate description of the point of discharge and the discharge route to the nearest classified segment as defined in 30 TAC Chapter 307:

N/A

City nearest the outfall(s): N/A

County in which the outfalls(s) is/are located: N/A

C. Is or will the treated wastewater discharge to a city, county, or state highway right-of-way, or a flood control district drainage ditch?

☐ Yes ☒ No

If **yes**, indicate by a check mark if:

☐ Authorization granted ☐ Authorization pending

For **new and amendment** applications, provide copies of letters that show proof of contact and the approval letter upon receipt.

Attachment: N/A

D. For all applications involving an average daily discharge of 5 MGD or more, provide the names of all counties located within 100 statute miles downstream of the point(s) of discharge: N/A

Section 11. TLAP Disposal Information (Instructions Page 32)

A. For TLAPs, is the location of the effluent disposal site in the existing permit accurate?

☒ Yes ☐ No

If **no, or a new or amendment permit application**, provide an accurate description of the disposal site location:

N/A

B. City nearest the disposal site: Lago Vista, Texas

C. County in which the disposal site is located: Travis County

D. For **TLAPs**, describe the routing of effluent from the treatment facility to the disposal site:

Effluent routed to Cedar Breaks site through 12-inch pipe to a 61 acre-ft holding pond. Effluent routed to Lago Vista Golf Course through 10-in pipe to three (3) holding ponds totaling 68.4 acre-ft of storage.

E. For **TLAPs**, please identify the nearest watercourse to the disposal site to which rainfall runoff might flow if not contained: Lake Travis in Segment No. 1404 of the Colorado River

Section 12. Miscellaneous Information (Instructions Page 32)

A. Is the facility located on or does the treated effluent cross American Indian Land?

☐ Yes ☒ No

B. If the existing permit contains an onsite sludge disposal authorization, is the location of the sewage sludge disposal site in the existing permit accurate?

☐ Yes ☐ No ☒ Not Applicable

If No, or if a new onsite sludge disposal authorization is being requested in this permit application, provide an accurate location description of the sewage sludge disposal site.

N/A

C. Did any person formerly employed by the TCEQ represent your company and get paid for service regarding this application?

☐ Yes ☒ No

If yes, list each person formerly employed by the TCEQ who represented your company and was paid for service regarding the application: N/A

D. Do you owe any fees to the TCEQ?

☐ Yes ☒ No

If **yes**, provide the following information:

Account number: N/A

Amount past due: N/A

E. Do you owe any penalties to the TCEQ?

☐ Yes ☒ No

If **yes**, please provide the following information:

Enforcement order number: N/A

Amount past due: N/A

Section 13. Attachments (Instructions Page 33)

Indicate which attachments are included with the Administrative Report. Check all that apply:

☐ Lease agreement or deed recorded easement, if the land where the treatment facility is located or the effluent disposal site are not owned by the applicant or co-applicant.

☒ Original full-size USGS Topographic Map with the following information:

- Applicant's property boundary
- Treatment facility boundary
- Labeled point of discharge for each discharge point (TPDES only)
- Highlighted discharge route for each discharge point (TPDES only)
- Onsite sewage sludge disposal site (if applicable)
- Effluent disposal site boundaries (TLAP only)
- New and future construction (if applicable)
- 1 mile radius information
- 3 miles downstream information (TPDES only)
- All ponds.

☐ Attachment 1 for Individuals as co-applicants

☐ Other Attachments. Please specify: See Attachment E for Full-size USGS Topo Map.

Section 14. Signature Page (Instructions Page 34)

If co-applicants are necessary, each entity must submit an original, separate signature page.

Permit Number: WQ00 11752001

Applicant: City of Lago Vista

Certification:

I certify under penalty of law that this document and all attachments were prepared under my direction or supervision in accordance with a system designed to assure that qualified personnel properly gather and evaluate the information submitted. Based on my inquiry of the person or persons who manage the system, or those persons directly responsible for gathering the information, the information submitted is, to the best of my knowledge and belief, true, accurate, and complete. I am aware there are significant penalties for submitting false information, including the possibility of fine and imprisonment for knowing violations.

I further certify that I am authorized under 30 Texas Administrative Code § 305.44 to sign and submit this document, and can provide documentation in proof of such authorization upon request.

Signatory name (typed or printed): Taylor Whichard

Signatory title: Public Works Director

Signature: _____ Date: 4/30/25

(Use blue ink)

Subscribed and Sworn to before me by the said Taylor Whichard

on this 30th day of April, 20 25.

My commission expires on the 11th day of May, 20 27.

_____

Notary Public

Maria Franco
My Commission Expires
5/11/2027
Notary ID 11609958

[SEAL]

Travis

County, Texas

DOMESTIC WASTEWATER PERMIT APPLICATION ADMINISTRATIVE REPORT 1.0

The following information is required for new and amendment applications.

Section 1. Affected Landowner Information (Instructions Page 36)

A. Indicate by a check mark that the landowners map or drawing, with scale, includes the following information, as applicable:

- ☒ The applicant's property boundaries
- ☒ The facility site boundaries within the applicant's property boundaries
- ☒ The distance the buffer zone falls into adjacent properties and the property boundaries of the landowners located within the buffer zone
- ☒ The property boundaries of all landowners surrounding the applicant's property (Note: if the application is a major amendment for a lignite mine, the map must include the property boundaries of all landowners adjacent to the new facility (ponds).)
- ☒ The point(s) of discharge and highlighted discharge route(s) clearly shown for one mile downstream
- ☒ The property boundaries of the landowners located on both sides of the discharge route for one full stream mile downstream of the point of discharge
- ☒ The property boundaries of the landowners along the watercourse for a one-half mile radius from the point of discharge if the point of discharge is into a lake, bay, estuary, or affected by tides
- ☒ The boundaries of the effluent disposal site (for example, irrigation area or subsurface drainfield site) and all evaporation/holding ponds within the applicant's property
- ☒ The property boundaries of all landowners surrounding the effluent disposal site
- ☒ The boundaries of the sludge land application site (for land application of sewage sludge for beneficial use) and the property boundaries of landowners surrounding the applicant's property boundaries where the sewage sludge land application site is located
- ☒ The property boundaries of landowners within one-half mile in all directions from the applicant's property boundaries where the sewage sludge disposal site (for example, sludge surface disposal site or sludge monofill) is located

B. ☐ Indicate by a check mark that a separate list with the landowners' names and mailing addresses cross-referenced to the landowner's map has been provided.

C. Indicate by a check mark in which format the landowners list is submitted:

☐ USB Drive ☐ Four sets of labels

D. Provide the source of the landowners' names and mailing addresses: N/A

E. As required by *Texas Water Code § 5.115*, is any permanent school fund land affected by this application?

☐ Yes ☒ No

If **yes**, provide the location and foreseeable impacts and effects this application has on the land(s):

N/A

Section 2. Original Photographs (Instructions Page 38)

Provide original ground level photographs. Indicate with checkmarks that the following information is provided.

☐ At least one original photograph of the new or expanded treatment unit location

☐ At least two photographs of the existing/proposed point of discharge and as much area downstream (photo 1) and upstream (photo 2) as can be captured. If the discharge is to an open water body (e.g., lake, bay), the point of discharge should be in the right or left edge of each photograph showing the open water and with as much area on each respective side of the discharge as can be captured.

☐ At least one photograph of the existing/proposed effluent disposal site

☐ A plot plan or map showing the location and direction of each photograph

Section 3. Buffer Zone Map (Instructions Page 38)

A. Buffer zone map. Provide a buffer zone map on 8.5 x 11-inch paper with all of the following information. The applicant's property line and the buffer zone line may be distinguished by using dashes or symbols and appropriate labels.

- The applicant's property boundary;
- The required buffer zone; and
- Each treatment unit; and
- The distance from each treatment unit to the property boundaries.

B. Buffer zone compliance method. Indicate how the buffer zone requirements will be met. Check all that apply.

☐ Ownership

☐ Restrictive easement

☐ Nuisance odor control

☐ Variance

C. Unsuitable site characteristics. Does the facility comply with the requirements regarding unsuitable site characteristic found in 30 TAC § 309.13(a) through (d)?

☐ Yes ☐ No

NOT APPLICABLE

DOMESTIC WASTEWATER PERMIT APPLICATION

SUPPLEMENTAL PERMIT INFORMATION FORM (SPIF)

This form applies to TPDES permit applications only. Complete and attach the Supplemental Permit information Form (SPIF) (TCEQ Form 20971).

Attachment: N/A

WATER QUALITY PERMIT

PAYMENT SUBMITTAL FORM

Use this form to submit the Application Fee, if the mailing the payment.

- Complete items 1 through 5 below.
- Staple the check or money order in the space provided at the bottom of this document.
- **Do Not mail this form with the application form.**
- Do not mail this form to the same address as the application.
- Do not submit a copy of the application with this form as it could cause duplicate permit entries.

Mail this form and the check or money order to:

BY REGULAR U.S. MAIL

Texas Commission on Environmental Quality
Financial Administration Division
Cashier's Office, MC-214
P.O. Box 13088
Austin, Texas 78711-3088

BY OVERNIGHT/EXPRESS MAIL

Texas Commission on Environmental Quality
Financial Administration Division
Cashier's Office, MC-214
12100 Park 35 Circle
Austin, Texas 78753

Fee Code: WQP **Waste Permit No:** N/A

1. Check or Money Order Number: 61994
2. Check or Money Order Amount: $2,050.00
3. Date of Check or Money Order: 05/08/2025
4. Name on Check or Money Order: Texas Commission on Environmental Quality
5. APPLICATION INFORMATION

   Name of Project or Site: City of Lago Vista Wastewater Treatment Plant Expansion TLAP Major Amendment

   Physical Address of Project or Site: 21011 Seminole Dr, Lago Vista, TX 78645

   If the check is for more than one application, attach a list which includes the name of each Project or Site (RE) and Physical Address, exactly as provided on the application.

Staple Check or Money Order in This Space

For Payment Photocopy, See Attachment V.

NOT APPLICABLE

ATTACHMENT 1

INDIVIDUAL INFORMATION

Section 1. Individual Information (Instructions Page 41)

Complete this attachment if the facility applicant or co-applicant is an individual. Make additional copies of this attachment if both are individuals.

Prefix (Mr., Ms., Miss): N/A

Full legal name (Last Name, First Name, Middle Initial): N/A

Driver's License or State Identification Number: N/A

Date of Birth: N/A

Mailing Address: N/A

City, State, and Zip Code: N/A

Phone Number: N/A Fax Number: N/A

E-mail Address: N/A

CN: N/A

For Commission Use Only:
Customer Number:
Regulated Entity Number:
Permit Number:

DOMESTIC WASTEWATER PERMIT APPLICATION CHECKLIST OF COMMON DEFICIENCIES

Below is a list of common deficiencies found during the administrative review of domestic wastewater permit applications. To ensure the timely processing of this application, please review the items below and indicate by checking Yes that each item is complete and in accordance applicable rules at 30 TAC Chapters 21, 281, and 305. If an item is not required this application, indicate by checking N/A where appropriate. Please do not submit the application until the items below have been addressed.

Core Data Form (TCEQ Form No. 10400) ☒ Yes
(Required for all application types. Must be completed in its entirety and signed. Note: Form may be signed by applicant representative.)

Correct and Current Industrial Wastewater Permit Application Forms ☒ Yes
(TCEQ Form Nos. 10053 and 10054. Version dated 6/25/2018 or later.)

Water Quality Permit Payment Submittal Form (Page 19) ☒ Yes
(Original payment sent to TCEQ Revenue Section. See instructions for mailing address.)

7.5 Minute USGS Quadrangle Topographic Map Attached ☒ Yes
(Full-size map if seeking "New" permit. 8 ½ x 11 acceptable for Renewals and Amendments)

Current/Non-Expired, Executed Lease Agreement or Easement ☒ N/A ☐ Yes

Landowners Map ☒ N/A ☐ Yes
(See instructions for landowner requirements)

Things to Know:

- All the items shown on the map must be labeled.
- The applicant's complete property boundaries must be delineated which includes boundaries of contiguous property owned by the applicant.
- The applicant cannot be its own adjacent landowner. You must identify the landowners immediately adjacent to their property, regardless of how far they are from the actual facility.
- If the applicant's property is adjacent to a road, creek, or stream, the landowners on the opposite side must be identified. Although the properties are not adjacent to applicant's property boundary, they are considered potentially affected landowners. If the adjacent road is a divided highway as identified on the USGS topographic map, the applicant does not have to identify the landowners on the opposite side of the highway.

Landowners Cross Reference List ☒ N/A ☐ Yes
(See instructions for landowner requirements)

Landowners Labels or USB Drive attached ☒ N/A ☐ Yes
(See instructions for landowner requirements)

Original signature per 30 TAC § 305.44 – Blue Ink Preferred ☒ Yes
(If signature page is not signed by an elected official or principle executive officer, a copy of signature authority/delegation letter must be attached)

Plain Language Summary ☒ Yes

TEXAS COMMISSION ON ENVIRONMENTAL QUALITY

DOMESTIC WASTEWATER PERMIT APPLICATION TECHNICAL REPORT 1.0

For any questions about this form, please contact the Domestic Wastewater Permitting Team at 512-239-4671.

The following information is required for all renewal, new, and amendment applications.

Section 1. Permitted or Proposed Flows (Instructions Page 42)

A. Existing/Interim I Phase

Design Flow (MGD): 1.0

2-Hr Peak Flow (MGD): N/A

Estimated construction start date: N/A

Estimated waste disposal start date: N/A

B. Interim II Phase

Design Flow (MGD): N/A

2-Hr Peak Flow (MGD): N/A

Estimated construction start date: N/A

Estimated waste disposal start date: N/A

C. Final Phase

Design Flow (MGD): 1.5

2-Hr Peak Flow (MGD): 6

Estimated construction start date: 01/01/2028

Estimated waste disposal start date: 06/01/2029

D. Current Operating Phase

Provide the startup date of the facility: 05/2020

Section 2. Treatment Process (Instructions Page 42)

A. Current Operating Phase

Provide a detailed description of the treatment process. **Include the type of treatment plant, mode of operation, and all treatment units.** Start with the plant's head works and

finish with the point of discharge. Include all sludge processing and drying units. **If more than one phase exists or is proposed, a description of *each phase* must be provided**.

The Lago Vista WWTP currently (Interim Phase) operates a complete mixed activated sludge system with treatment units consisting of headworks (bar screen and grit chamber), aeration basin, secondary clarifier, chlorine contact chambers, and outfall weir. The Lago Vista WWTP proposed Final Phase anticipates operating as a complete mixed-activated sludge system with treatment units consisting of headworks (bar screen and grit chamber), equalization basin, aeration basin, secondary clarifier, chlorine contact chamber, and Parshall flume. The current and proposed sludge processing units consist of aerated sludge holding tank and a belt filter press.

B. Treatment Units

In Table 1.0(1), provide the treatment unit type, the number of units, and dimensions (length, width, depth) **of each treatment unit, accounting for *all* phases of operation.**

Table 1.0(1) - Treatment Units

Treatment Unit Type	Number of Units	Dimensions (L x W x D)
Bar Screen	1	10’ x 3’ x 4’
Grit Removal	1	14’ x 14’ x 14’
Equalization Basin	1	42’ x 30’ x 18’
Aeration Basin	2	60’ x 50’ x 16.5’
Secondary Clarifier	2	⌀ 70’ x 16.3’
Chlorination Basin	2	25’ x 12’ x 13’
Aerated Sludge Holding Tank	1	⌀ 70’ x 16.3’
Belt Filter Press	1	50’ x 25’ x 16’
Parshall Flume	1	6’ x 25’ x 5’

C. Process Flow Diagram

Provide flow diagrams for the existing facilities and **each** proposed phase of construction.

Attachment: See Attachment F.

Section 3. Site Information and Drawing (Instructions Page 43)

Provide the TPDES discharge outfall latitude and longitude. Enter N/A if not applicable.

- Latitude: N/A
- Longitude: N/A

Provide the TLAP disposal site latitude and longitude. Enter N/A if not applicable.

- Latitude: Lago Vista Golf Course: 30.450624; Cedar Breaks: 30.488390
- Longitude: Lago Vista Golf Course: -98.000863; Cedar Breaks: -97.985270

Provide a site drawing for the facility that shows the following:

- The boundaries of the treatment facility;
- The boundaries of the area served by the treatment facility;

- If land disposal of effluent, the boundaries of the disposal site and all storage/holding ponds; and
- If sludge disposal is authorized in the permit, the boundaries of the land application or disposal site.

Attachment: See Attachment G.
Provide the name **and** a description of the area served by the treatment facility.

City of Lago Vista – Population: 9,692 (2022).

Collection System Information **for wastewater TPDES permits only**: Provide information for each **uniquely owned** collection system, existing and new, served by this facility, including satellite collection systems. **Please see the instructions for a detailed explanation and examples.**

Collection System Information

Collection System Name	Owner Name	Owner Type	Population Served
N/A	N/A	Choose an item.	N/A
N/A	N/A	Choose an item.	N/A
N/A	N/A	Choose an item.	N/A
N/A	N/A	Choose an item.	N/A

Section 4. Unbuilt Phases (Instructions Page 44)

Is the application for a renewal of a permit that contains an unbuilt phase or phases?

☐ Yes ☒ No

If yes, does the existing permit contain a phase that has not been constructed **within five years** of being authorized by the TCEQ?

☐ Yes ☒ No

If yes, provide a detailed discussion regarding the continued need for the unbuilt phase. **Failure to provide sufficient justification may result in the Executive Director recommending denial of the unbuilt phase or phases**.

N/A

Section 5. Closure Plans (Instructions Page 44)

Have any treatment units been taken out of service permanently, or will any units be taken out of service in the next five years?

☐ Yes ☒ No

If yes, was a closure plan submitted to the TCEQ?

☐ Yes ☐ No

If yes, provide a brief description of the closure and the date of plan approval.

N/A

Section 6. Permit Specific Requirements (Instructions Page 44)

For applicants with an existing permit, check the Other Requirements or Special Provisions of the permit.

A. Summary transmittal

Have plans and specifications been approved for the existing facilities and each proposed phase?

☐ Yes ☒ No

If yes, provide the date(s) of approval for each phase: N/A

Provide information, including dates, on any actions taken to meet a *requirement or provision* pertaining to the submission of a summary transmittal letter. **Provide a copy of an approval letter from the TCEQ, if applicable**.

N/A

B. Buffer zones

Have the buffer zone requirements been met?

☒ Yes ☐ No

Provide information below, including dates, on any actions taken to meet the conditions of the buffer zone. If available, provide any new documentation relevant to maintaining the buffer zones.

Special Provisions 7 & 19 in the current City of Lago Vista WWTP permit no. WQ0011752001.

C. Other actions required by the current permit

Does the *Other Requirements* or *Special Provisions* section in the existing permit require submission of any other information or other required actions? Examples include Notification of Completion, progress reports, soil monitoring data, etc.

☒ Yes ☐ No

If yes, provide information below on the status of any actions taken to meet the conditions of an *Other Requirement* or *Special Provision*.

Annual soil analysis of land application area of the treated effluent. See Attachment H.

D. Grit and grease treatment

1. Acceptance of grit and grease waste

Does the facility have a grit and/or grease processing facility onsite that treats and decants or accepts transported loads of grit and grease waste that are discharged directly to the wastewater treatment plant prior to any treatment?

☐ Yes ☒ No

If No, stop here and continue with Subsection E. Stormwater Management.

2. Grit and grease processing

Describe below how the grit and grease waste is treated at the facility. In your description, include how and where the grit and grease is introduced to the treatment works and how it is separated or processed. Provide a flow diagram showing how grit and grease is processed at the facility.

N/A

3. *Grit disposal*

Does the facility have a Municipal Solid Waste (MSW) registration or permit for grit disposal?

☐ Yes ☒ No

If No, contact the TCEQ Municipal Solid Waste team at 512-239-2335. Note: A registration or permit is required for grit disposal. Grit shall not be combined with treatment plant sludge. See the instruction booklet for additional information on grit disposal requirements and restrictions.

Describe the method of grit disposal.

N/A

4. *Grease and decanted liquid disposal*

Note: A registration or permit is required for grease disposal. Grease shall not be combined with treatment plant sludge. For more information, contact the TCEQ Municipal Solid Waste team at 512-239-2335.

Describe how the decant and grease are treated and disposed of after grit separation.

N/A

E. Stormwater management

1. *Applicability*

Does the facility have a design flow of 1.0 MGD or greater in any phase?

☒ Yes ☐ No

Does the facility have an approved pretreatment program, under 40 CFR Part 403?

☐ Yes ☒ No

If no to both of the above, then skip to Subsection F, Other Wastes Received.

2. *MSGP coverage*

Is the stormwater runoff from the WWTP and dedicated lands for sewage disposal currently permitted under the TPDES Multi-Sector General Permit (MSGP), TXR050000?

☐ Yes ☒ No

If yes, please provide MSGP Authorization Number and skip to Subsection F, Other Wastes Received:

TXR05 N/A or TXRNE N/A

If no, do you intend to seek coverage under TXR050000?

☐ Yes ☒ No

3. *Conditional exclusion*

Alternatively, do you intend to apply for a conditional exclusion from permitting based TXR050000 (Multi Sector General Permit) Part II B.2 or TXR050000 (Multi Sector General Permit) Part V, Sector T 3(b)?

☐ Yes ☒ No

If yes, please explain below then proceed to Subsection F, Other Wastes Received:

N/A

4. *Existing coverage in individual permit*

Is your stormwater discharge currently permitted through this individual TPDES or TLAP permit?

☒ Yes ☐ No

If yes, provide a description of stormwater runoff management practices at the site that are authorized in the wastewater permit then skip to Subsection F, Other Wastes Received.

See Attachment I.

5. *Zero stormwater discharge*

Do you intend to have no discharge of stormwater via use of evaporation or other means?

☐ Yes ☒ No

If yes, explain below then skip to Subsection F. Other Wastes Received.

N/A

Note: If there is a potential to discharge any stormwater to surface water in the state as the result of any storm event, then permit coverage is required under the MSGP or an individual discharge permit. This requirement applies to all areas of facilities with treatment plants or systems that treat, store, recycle, or reclaim domestic sewage, wastewater or sewage sludge (including dedicated lands for sewage sludge disposal located within the onsite property boundaries) that meet the applicability criteria of

above. You have the option of obtaining coverage under the MSGP for direct discharges, (recommended), or obtaining coverage under this individual permit.

6. Request for coverage in individual permit

Are you requesting coverage of stormwater discharges associated with your treatment plant under this individual permit?

☐ Yes ☒ No

If yes, provide a description of stormwater runoff management practices at the site for which you are requesting authorization in this individual wastewater permit and describe whether you intend to comingle this discharge with your treated effluent or discharge it via a separate dedicated stormwater outfall. Please also indicate if you intend to divert stormwater to the treatment plant headworks and indirectly discharge it to water in the state.

N/A

Note: Direct stormwater discharges to waters in the state authorized through this individual permit will require the development and implementation of a stormwater pollution prevention plan (SWPPP) and will be subject to additional monitoring and reporting requirements. Indirect discharges of stormwater via headworks recycling will require compliance with all individual permit requirements including 2-hour peak flow limitations. All stormwater discharge authorization requests will require additional information during the technical review of your application.

F. Discharges to the Lake Houston Watershed

Does the facility discharge in the Lake Houston watershed?

☐ Yes ☒ No

If yes, attach a Sewage Sludge Solids Management Plan. See Example 5 in the instructions.
N/A

G. Other wastes received including sludge from other WWTPs and septic waste

1. Acceptance of sludge from other WWTPs

Does or will the facility accept sludge from other treatment plants at the facility site?

☐ Yes ☒ No

If yes, attach sewage sludge solids management plan. See Example 5 of instructions.

In addition, provide the date the plant started or is anticipated to start accepting sludge, an estimate of monthly sludge acceptance (gallons or millions of gallons), an estimate of the BOD_5 concentration of the sludge, and the design BOD_5 concentration of the influent from the collection system. Also note if this information has or has not changed since the last permit action.

N/A

Note: Permits that accept sludge from other wastewater treatment plants may be required to have influent flow and organic loading monitoring.

2. ***Acceptance of septic waste***

Is the facility accepting or will it accept septic waste?

☐ Yes ☒ No

If yes, does the facility have a Type V processing unit?

☐ Yes ☒ No

If yes, does the unit have a Municipal Solid Waste permit?

☐ Yes ☒ No

If yes to any of the above, provide the date the plant started or is anticipated to start accepting septic waste, an estimate of monthly septic waste acceptance (gallons or millions of gallons), an estimate of the BOD_5 concentration of the septic waste, and the design BOD_5 concentration of the influent from the collection system. Also note if this information has or has not changed since the last permit action.

N/A

Note: Permits that accept sludge from other wastewater treatment plants may be required to have influent flow and organic loading monitoring.

3. ***Acceptance of other wastes (not including septic, grease, grit, or RCRA, CERCLA or as discharged by IUs listed in Worksheet 6)***

Is or will the facility accept wastes that are not domestic in nature excluding the categories listed above?

☐ Yes ☒ No

If yes, provide the date that the plant started accepting the waste, an estimate how much waste is accepted on a monthly basis (gallons or millions of gallons), a description of the entities generating the waste, and any distinguishing chemical or other physical characteristic of the waste. Also note if this information has or has not changed since the last permit action.

N/A

Section 7. Pollutant Analysis of Treated Effluent (Instructions Page 49)

Is the facility in operation?

☒ Yes ☐ No

If no, this section is not applicable. Proceed to Section 8.

If yes, provide effluent analysis data for the listed pollutants. ***Wastewater treatment facilities*** complete Table 1.0(2). W***ater treatment facilities*** discharging filter backwash water, complete Table 1.0(3). Provide copies of the laboratory results sheets. **These tables are not applicable for a minor amendment without renewal.** See the instructions for guidance.

Note: The sample date must be within 1 year of application submission.

Table1.0(2) – Pollutant Analysis for Wastewater Treatment Facilities

Pollutant	Average Conc.	Max Conc.	No. of Samples	Sample Type	Sample Date/Time
$CBOD_5$, mg/l	<1	N/A	1	Composite	04/8/2025
Total Suspended Solids, mg/l	1	N/A	1	Grab	04/8/2025
Ammonia Nitrogen, mg/l	1.67	N/A	1	Grab	04/8/2025
Nitrate Nitrogen, mg/l	16	N/A	1	Grab	04/8/2025
Total Kjeldahl Nitrogen, mg/l	1.75	N/A	1	Grab	04/8/2025
Sulfate, mg/l	39.9	N/A	1	Grab	04/8/2025
Chloride, mg/l	138	N/A	1	Grab	04/8/2025
Total Phosphorus, mg/l	8.6	N/A	1	Grab	04/8/2025
pH, standard units	7.46	6.0-9.0	1	Grab	2/18/2025
Dissolved Oxygen*, mg/l	N/A	N/A	N/A	N/A	N/A
Chlorine Residual, mg/l	2.91	N/A	1	Continuous	2/18/2025
E.coli (CFU/100ml) freshwater	N/A	N/A	1	Grab	N/A
Entercocci (CFU/100ml) saltwater	N/A	N/A	N/A	N/A	N/A
Total Dissolved Solids, mg/l	514	N/A	1	Grab	04/8/2025
Electrical Conductivity, µmohs/cm, †	934	N/A	1	Grab	04/8/2025

Oil & Grease, mg/l	<4.8	N/A	1	Grab	04/8/2025
Alkalinity ($CaCO_3$)*, mg/l	N/A	N/A	N/A	N/A	N/A

*TPDES permits only
†TLAP permits only

Table1.0(3) – Pollutant Analysis for Water Treatment Facilities

Pollutant	Average Conc.	Max Conc.	No. of Samples	Sample Type	Sample Date/Time
Total Suspended Solids, mg/l	N/A	N/A	N/A	N/A	N/A
Total Dissolved Solids, mg/l	N/A	N/A	N/A	N/A	N/A
pH, standard units	N/A	N/A	N/A	N/A	N/A
Fluoride, mg/l	N/A	N/A	N/A	N/A	N/A
Aluminum, mg/l	N/A	N/A	N/A	N/A	N/A
Alkalinity ($CaCO_3$), mg/l	N/A	N/A	N/A	N/A	N/A

Section 8. Facility Operator (Instructions Page 49)

Facility Operator Name: Jose Munoz. See Attachment B for additional operator information.

Facility Operator's License Classification and Level: Class B Wastewater Treatment Operator

Facility Operator's License Number: WW0053954

Section 9. Sludge and Biosolids Management and Disposal (Instructions Page 50)

A. WWTP's Sewage Sludge or Biosolids Management Facility Type

Check all that apply. See instructions for guidance

- ☒ Design flow>= 1 MGD
- ☒ Serves >= 10,000 people
- ☐ Class I Sludge Management Facility (per 40 CFR § 503.9)
- ☐ Biosolids generator
- ☐ Biosolids end user – land application (onsite)
- ☐ Biosolids end user – surface disposal (onsite)
- ☐ Biosolids end user – incinerator (onsite)

B. WWTP's Sewage Sludge or Biosolids Treatment Process

Check all that apply. See instructions for guidance.

- ☐ Aerobic Digestion
- ☐ Air Drying (or sludge drying beds)
- ☐ Lower Temperature Composting
- ☐ Lime Stabilization

☐ Higher Temperature Composting

☐ Heat Drying

☐ Thermophilic Aerobic Digestion

☐ Beta Ray Irradiation

☐ Gamma Ray Irradiation

☐ Pasteurization

☐ Preliminary Operation (e.g. grinding, de-gritting, blending)

☒ Thickening (e.g. gravity thickening, centrifugation, filter press, vacuum filter)

☐ Sludge Lagoon

☐ Temporary Storage (< 2 years)

☐ Long Term Storage (>= 2 years)

☐ Methane or Biogas Recovery

☐ Other Treatment Process: N/A

C. Sewage Sludge or Biosolids Management

Provide information on the *intended* sewage sludge or biosolids management practice. Do not enter every management practice that you want authorized in the permit, as the permit will authorize all sewage sludge or biosolids management practices listed in the instructions. Rather indicate the management practice the facility plans to use.

Biosolids Management

Management Practice	Handler or Preparer Type	Bulk or Bag Container	Amount (dry metric tons)	Pathogen Reduction Options	Vector Attraction Reduction Option
Other	Off-site Third-Party Handler or Preparer	Bulk	389.66 metric tons	Class B: PSRP Aerobic Digestion	N/A: Trasporrted to another facility for further processing

If "Other" is selected for Management Practice, please explain (e.g. monofill or transport to another WWTP): Biosolids are transported offsite to the third-party compost facility mentioned below.

D. Disposal site

Disposal site name: JV Dirt + Loam

TCEQ permit or registration number: 2310

County where disposal site is located: Travis

E. Transportation method

Method of transportation (truck, train, pipe, other): Truck

Name of the hauler: Wastewater Transport Services, LLC

Hauler registration number: 24343

Sludge is transported as a:

Liquid ☐ semi-liquid ☐ semi-solid ☐ solid ☒

Section 10. Permit Authorization for Sewage Sludge Disposal (Instructions Page 52)

A. Beneficial use authorization

Does the existing permit include authorization for land application of biosolids for beneficial use?

☐ Yes ☒ No

If yes, are you requesting to continue this authorization to land apply biosolids for beneficial use?

☐ Yes ☐ No

If yes, is the completed **Application for Permit for Beneficial Land Use of Sewage Sludge (TCEQ Form No. 10451)** attached to this permit application (see the instructions for details)?

☐ Yes ☐ No

B. Sludge processing authorization

Does the existing permit include authorization for any of the following sludge processing, storage or disposal options?

Sludge Composting	☐ Yes	☒ No
Marketing and Distribution of Biosolids	☐ Yes	☒ No
Sludge Surface Disposal or Sludge Monofill	☐ Yes	☒ No
Temporary storage in sludge lagoons	☐ Yes	☒ No

If yes to any of the above sludge options and the applicant is requesting to continue this authorization, is the completed **Domestic Wastewater Permit Application: Sewage Sludge Technical Report (TCEQ Form No. 10056)** attached to this permit application?

☐ Yes ☐ No

Section 11. Sewage Sludge Lagoons (Instructions Page 53)

Does this facility include sewage sludge lagoons?

☐ Yes ☒ No

If yes, complete the remainder of this section. If no, proceed to Section 12.

A. Location information

The following maps are required to be submitted as part of the application. For each map, provide the Attachment Number.

- Original General Highway (County) Map:

  Attachment: N/A
- USDA Natural Resources Conservation Service Soil Map:

  Attachment: N/A
- Federal Emergency Management Map:

  Attachment: N/A
- Site map:

  Attachment: N/A

Discuss in a description if any of the following exist within the lagoon area. Check all that apply.

- ☐ Overlap a designated 100-year frequency flood plain
- ☐ Soils with flooding classification
- ☐ Overlap an unstable area
- ☐ Wetlands
- ☐ Located less than 60 meters from a fault
- ☐ None of the above

Attachment: N/A

If a portion of the lagoon(s) is located within the 100-year frequency flood plain, provide the protective measures to be utilized including type and size of protective structures:

N/A

B. Temporary storage information

Provide the results for the pollutant screening of sludge lagoons. These results are in addition to pollutant results in *Section 7 of Technical Report 1.0.*

Nitrate Nitrogen, mg/kg: N/A

Total Kjeldahl Nitrogen, mg/kg: N/A

Total Nitrogen (=nitrate nitrogen + TKN), mg/kg: N/A

Phosphorus, mg/kg: N/A

Potassium, mg/kg: N/A

pH, standard units: N/A

Ammonia Nitrogen mg/kg: N/A

Arsenic: N/A

Cadmium: N/A

Chromium: N/A

Copper: N/A

Lead: N/A

Mercury: N/A

Molybdenum: N/A

Nickel: N/A

Selenium: N/A

Zinc: N/A

Total PCBs: N/A

Provide the following information:

Volume and frequency of sludge to the lagoon(s): N/A

Total dry tons stored in the lagoons(s) per 365-day period: N/A

Total dry tons stored in the lagoons(s) over the life of the unit: N/A

C. Liner information

Does the active/proposed sludge lagoon(s) have a liner with a maximum hydraulic conductivity of $1x10^{-7}$ cm/sec?

☐ Yes ☐ No

If yes, describe the liner below. Please note that a liner is required.

N/A

D. Site development plan

Provide a detailed description of the methods used to deposit sludge in the lagoon(s):

N/A

Attach the following documents to the application.

- Plan view and cross-section of the sludge lagoon(s)

  Attachment: N/A

- Copy of the closure plan

  Attachment: N/A
- Copy of deed recordation for the site

  Attachment: N/A
- Size of the sludge lagoon(s) in surface acres and capacity in cubic feet and gallons

  Attachment: N/A
- Description of the method of controlling infiltration of groundwater and surface water from entering the site

  Attachment: N/A
- Procedures to prevent the occurrence of nuisance conditions

  Attachment: N/A

E. Groundwater monitoring

Is groundwater monitoring currently conducted at this site, or are any wells available for groundwater monitoring, or are groundwater monitoring data otherwise available for the sludge lagoon(s)?

☐ Yes ☒ No

If groundwater monitoring data are available, provide a copy. Provide a profile of soil types encountered down to the groundwater table and the depth to the shallowest groundwater as a separate attachment.

Attachment: N/A

Section 12. Authorizations/Compliance/Enforcement (Instructions Page 54)

A. Additional authorizations

Does the permittee have additional authorizations for this facility, such as reuse authorization, sludge permit, etc?

☒ Yes ☐ No

If yes, provide the TCEQ authorization number and description of the authorization:

R11752001 Reuse Authorization

B. Permittee enforcement status

Is the permittee currently under enforcement for this facility?

☐ Yes ☒ No

Is the permittee required to meet an implementation schedule for compliance or enforcement?

☐ Yes ☒ No

If yes to either question, provide a brief summary of the enforcement, the implementation schedule, and the current status:

N/A

Section 13. RCRA/CERCLA Wastes (Instructions Page 55)

A. RCRA hazardous wastes

Has the facility received in the past three years, does it currently receive, or will it receive RCRA hazardous waste?

☐ Yes ☒ No

B. Remediation activity wastewater

Has the facility received in the past three years, does it currently receive, or will it receive CERCLA wastewater, RCRA remediation/corrective action wastewater or other remediation activity wastewater?

☐ Yes ☒ No

C. Details about wastes received

If yes to either Subsection A or B above, provide detailed information concerning these wastes with the application.

Attachment: N/A

Section 14. Laboratory Accreditation (Instructions Page 55)

All laboratory tests performed must meet the requirements of *30 TAC Chapter 25, Environmental Testing Laboratory Accreditation and Certification*, which includes the following general exemptions from National Environmental Laboratory Accreditation Program (NELAP) certification requirements:

- The laboratory is an in-house laboratory and is:
  - periodically inspected by the TCEQ; or
  - located in another state and is accredited or inspected by that state; or
  - performing work for another company with a unit located in the same site; or
  - performing pro bono work for a governmental agency or charitable organization.
- The laboratory is accredited under federal law.
- The data are needed for emergency-response activities, and a laboratory accredited under the Texas Laboratory Accreditation Program is not available.
- The laboratory supplies data for which the TCEQ does not offer accreditation.

The applicant should review 30 TAC Chapter 25 for specific requirements.

The following certification statement shall be signed and submitted with every application. See the Signature Page section in the Instructions, for a list of designated representatives who may sign the certification.

CERTIFICATION:

I certify that all laboratory tests submitted with this application meet the requirements of *30 TAC Chapter 25, Environmental Testing Laboratory Accreditation and Certification.*

Printed Name: Charles West

Title: City Manager

Signature: Charles West

Date: 6/16/2025

See Attachment U.

DOMESTIC WASTEWATER PERMIT APPLICATION TECHNICAL REPORT 1.1

The following information is required for new and amendment major applications.

Section 1. Justification for Permit (Instructions Page 56)

A. Justification of permit need

Provide a detailed discussion regarding the need for any phase(s) not currently permitted. Failure to provide sufficient justification may result in the Executive Director recommending denial of the proposed phase(s) or permit.

The City of Lago Vista is experiencing significant population growth, which has led to increased demand on the existing 1 MGD WWTP. To accommodate this growth and ensure, the City of Lago Vista is proposing an expansion to a 1.5 MGD facility. This upgrade is critical to maintaining reliable wastewater treatment services, preventing system overloads, and supporting future development in the area. Expanding the WWTP will ensure the City of Lago Vista meets both current and future wastewater treatment needs.

B. Regionalization of facilities

For additional guidance, please review TCEQ's Regionalization Policy for Wastewater Treatment[1].

Provide the following information concerning the potential for regionalization of domestic wastewater treatment facilities:

1. Municipally incorporated areas

If the applicant is a city, then Item 1 is not applicable. Proceed to Item 2 Utility CCN areas.

Is any portion of the proposed service area located in an incorporated city?

☐ Yes ☐ No ☒ Not Applicable

If yes, within the city limits of: N/A

If yes, attach correspondence from the city.

Attachment: N/A

If consent to provide service is available from the city, attach a justification for the proposed facility and a cost analysis of expenditures that includes the cost of connecting to the city versus the cost of the proposed facility or expansion attached.

Attachment: N/A

2. Utility CCN areas

Is any portion of the proposed service area located inside another utility's CCN area?

☐ Yes ☒ No

[1] https://www.tceq.texas.gov/permitting/wastewater/tceq-regionalization-for-wastewater

If yes, attach a justification for the proposed facility and a cost analysis of expenditures that includes the cost of connecting to the CCN facilities versus the cost of the proposed facility or expansion.

Attachment: N/A

3. Nearby WWTPs or collection systems

Are there any domestic permitted wastewater treatment facilities or collection systems located within a three-mile radius of the proposed facility?

☐ Yes ☒ No

If yes, attach a list of these facilities and collection systems that includes each permittee's name and permit number, and an area map showing the location of these facilities and collection systems.

Attachment: N/A

If yes, attach proof of mailing a request for service to each facility and collection system, the letters requesting service, and correspondence from each facility and collection system.

Attachment: N/A

If the facility or collection system agrees to provide service, attach a justification for the proposed facility and a cost analysis of expenditures that includes the cost of connecting to the facility or collection system versus the cost of the proposed facility or expansion.

Attachment: N/A

Section 2. Proposed Organic Loading (Instructions Page 58)

Is this facility in operation?

☒ Yes ☐ No

If no, proceed to Item B, Proposed Organic Loading.

If yes, provide organic loading information in Item A, Current Organic Loading

A. Current organic loading

Facility Design Flow (flow being requested in application): 1.5 MGD

Average Influent Organic Strength or BOD_5 Concentration in mg/l: 314

Average Influent Loading (lbs/day = total average flow X average BOD_5 conc. X 8.34): 3,128

Provide the source of the average organic strength or BOD_5 concentration.

See Attachment K.

B. Proposed organic loading

This table must be completed if this application is for a facility that is not in operation or if this application is to request an increased flow that will impact organic loading.

Table 1.1(1) – Design Organic Loading

Source	Total Average Flow (MGD)	Influent BOD5 Concentration (mg/l)
Municipality	N/A	N/A
Subdivision	N/A	N/A
Trailer park – transient	N/A	N/A
Mobile home park	N/A	N/A
School with cafeteria and showers	N/A	N/A
School with cafeteria, no showers	N/A	N/A
Recreational park, overnight use	N/A	N/A
Recreational park, day use	N/A	N/A
Office building or factory	N/A	N/A
Motel	N/A	N/A
Restaurant	N/A	N/A
Hospital	N/A	N/A
Nursing home	N/A	N/A
Other	N/A	N/A
TOTAL FLOW from all sources	N/A	N/A
AVERAGE BOD_5 from all sources	N/A	N/A

Section 3. Proposed Effluent Quality and Disinfection (Instructions Page 58)

A. Existing/Interim I Phase Design Effluent Quality

Biochemical Oxygen Demand (5-day), mg/l: 10

Total Suspended Solids, mg/l: 15

Ammonia Nitrogen, mg/l: 2

Total Phosphorus, mg/l: 1

Dissolved Oxygen, mg/l: 4

Other: N/A

B. Interim II Phase Design Effluent Quality

Biochemical Oxygen Demand (5-day), mg/l: N/A

Total Suspended Solids, mg/l: N/A

Ammonia Nitrogen, mg/l: N/A

Total Phosphorus, mg/l: N/A

Dissolved Oxygen, mg/l: N/A

Other: N/A

C. Final Phase Design Effluent Quality

Biochemical Oxygen Demand (5-day), mg/l: 10

Total Suspended Solids, mg/l: 15

Ammonia Nitrogen, mg/l: 2

Total Phosphorus, mg/l: 1

Dissolved Oxygen, mg/l: 4

Other: N/A

D. Disinfection Method

Identify the proposed method of disinfection.

☒ Chlorine: 8 mg/l after 20 minutes detention time at peak flow

Dechlorination process: N/A

☐ Ultraviolet Light: N/A seconds contact time at peak flow

☐ Other: N/A

Section 4. Design Calculations (Instructions Page 58)

Attach design calculations and plant features for each proposed phase. Example 4 of the instructions includes sample design calculations and plant features.

Attachment: We are in the PER stage and will supply this information when available.

Section 5. Facility Site (Instructions Page 59)

A. 100-year floodplain

Will the proposed facilities be located above the 100-year frequency flood level?

☒ Yes ☐ No

If no, describe measures used to protect the facility during a flood event. Include a site map showing the location of the treatment plant within the 100-year frequency flood level. If applicable, provide the size and types of protective structures.

N/A

Provide the source(s) used to determine 100-year frequency flood plain.

FEMA Floodplain Map. See Attachment L

For a new or expansion of a facility, will a wetland or part of a wetland be filled?

☐ Yes ☒ No

If yes, has the applicant applied for a US Corps of Engineers 404 Dredge and Fill Permit?

☐ Yes ☒ No

If yes, provide the permit number: N/A

If no, provide the approximate date you anticipate submitting your application to the Corps: N/A

B. Wind rose

Attach a wind rose: N/A

Section 6. Permit Authorization for Sewage Sludge Disposal (Instructions Page 59)

A. Beneficial use authorization

Are you requesting to include authorization to land apply sewage sludge for beneficial use on property located adjacent to the wastewater treatment facility under the wastewater permit?

☐ Yes ☒ No

If yes, attach the completed **Application for Permit for Beneficial Land Use of Sewage Sludge (TCEQ Form No. 10451)**: N/A

B. Sludge processing authorization

Identify the sludge processing, storage or disposal options that will be conducted at the wastewater treatment facility:

☐ Sludge Composting

☐ Marketing and Distribution of sludge

☐ Sludge Surface Disposal or Sludge Monofill

If any of the above, sludge options are selected, attach the completed **Domestic Wastewater Permit Application: Sewage Sludge Technical Report (TCEQ Form No. 10056)**: N/A

Section 7. Sewage Sludge Solids Management Plan (Instructions Page 60)

Attach a solids management plan to the application.

Attachment: See Attachment M.

The sewage sludge solids management plan must contain the following information:

- Treatment units and processes dimensions and capacities
- Solids generated at 100, 75, 50, and 25 percent of design flow
- Mixed liquor suspended solids operating range at design and projected actual flow
- Quantity of solids to be removed and a schedule for solids removal
- Identification and ownership of the ultimate sludge disposal site
- For facultative lagoons, design life calculations, monitoring well locations and depths, and the ultimate disposal method for the sludge from the facultative lagoon

An example of a sewage sludge solids management plan has been included as Example 5 of the instructions.

NOT APPLICABLE

DOMESTIC WASTEWATER PERMIT APPLICATION WORKSHEET 2.0: RECEIVING WATERS

The following information is required for all TPDES permit applications.

Section 1. Domestic Drinking Water Supply (Instructions Page 63)

Is there a surface water intake for domestic drinking water supply located within 5 miles downstream from the point or proposed point of discharge?

☐ Yes ☐ No

If **no**, proceed it Section 2. **If yes**, provide the following:

Owner of the drinking water supply: N/A

Distance and direction to the intake: N/A

Attach a USGS map that identifies the location of the intake.

Attachment: N/A

Section 2. Discharge into Tidally Affected Waters (Instructions Page 63)

Does the facility discharge into tidally affected waters?

☐ Yes ☐ No

If **no**, proceed to Section 3. **If yes**, complete the remainder of this section. If no, proceed to Section 3.

A. Receiving water outfall

Width of the receiving water at the outfall, in feet: N/A

B. Oyster waters

Are there oyster waters in the vicinity of the discharge?

☐ Yes ☐ No

If yes, provide the distance and direction from outfall(s).

N/A

C. Sea grasses

Are there any sea grasses within the vicinity of the point of discharge?

☐ Yes ☐ No

If yes, provide the distance and direction from the outfall(s).

N/A

Section 3. Classified Segments (Instructions Page 63)

Is the discharge directly into (or within 300 feet of) a classified segment?

☐ Yes ☐ No

If yes, this Worksheet is complete.

If no, complete Sections 4 and 5 of this Worksheet.

Section 4. Description of Immediate Receiving Waters (Instructions Page 63)

Name of the immediate receiving waters: N/A

A. Receiving water type

Identify the appropriate description of the receiving waters.

☐ Stream

☐ Freshwater Swamp or Marsh

☐ Lake or Pond

Surface area, in acres: N/A

Average depth of the entire water body, in feet: N/A

Average depth of water body within a 500-foot radius of discharge point, in feet: N/A

☐ Man-made Channel or Ditch

☐ Open Bay

☐ Tidal Stream, Bayou, or Marsh

☐ Other, specify: N/A

B. Flow characteristics

If a stream, man-made channel or ditch was checked above, provide the following. For existing discharges, check one of the following that best characterizes the area *upstream* of the discharge. For new discharges, characterize the area *downstream* of the discharge (check one).

☐ Intermittent - dry for at least one week during most years

☐ Intermittent with Perennial Pools - enduring pools with sufficient habitat to maintain significant aquatic life uses

☐ Perennial - normally flowing

Check the method used to characterize the area upstream (or downstream for new dischargers).

☐ USGS flow records

☐ Historical observation by adjacent landowners

☐ Personal observation

☐ Other, specify: N/A

C. Downstream perennial confluences

List the names of all perennial streams that join the receiving water within three miles downstream of the discharge point.

N/A

D. Downstream characteristics

Do the receiving water characteristics change within three miles downstream of the discharge (e.g., natural or man-made dams, ponds, reservoirs, etc.)?

☐ Yes ☐ No

If yes, discuss how.

N/A

E. Normal dry weather characteristics

Provide general observations of the water body during normal dry weather conditions.

N/A

Date and time of observation: N/A

Was the water body influenced by stormwater runoff during observations?

☐ Yes ☐ No

Section 5. General Characteristics of the Waterbody (Instructions Page 65)

A. Upstream influences

Is the immediate receiving water upstream of the discharge or proposed discharge site influenced by any of the following? Check all that apply.

- ☐ Oil field activities
- ☐ Upstream discharges
- ☐ Septic tanks
- ☐ Urban runoff
- ☐ Agricultural runoff
- ☐ Other(s), specify: N/A

B. Waterbody uses

Observed or evidences of the following uses. Check all that apply.

- ☐ Livestock watering
- ☐ Irrigation withdrawal
- ☐ Fishing
- ☐ Domestic water supply
- ☐ Park activities
- ☐ Contact recreation
- ☐ Non-contact recreation
- ☐ Navigation
- ☐ Industrial water supply
- ☐ Other(s), specify: N/A

C. Waterbody aesthetics

Check one of the following that best describes the aesthetics of the receiving water and the surrounding area.

- ☐ Wilderness: outstanding natural beauty; usually wooded or unpastured area; water clarity exceptional
- ☐ Natural Area: trees and/or native vegetation; some development evident (from fields, pastures, dwellings); water clarity discolored
- ☐ Common Setting: not offensive; developed but uncluttered; water may be colored or turbid
- ☐ Offensive: stream does not enhance aesthetics; cluttered; highly developed; dumping areas; water discolored

DOMESTIC WASTEWATER PERMIT APPLICATION WORKSHEET 2.1: STREAM PHYSICAL CHARACTERISTICS

Required for new applications, major facilities, and applications adding an outfall.

Worksheet 2.1 is not required for discharges to intermittent streams or discharges directly to (or within 300 feet of) a classified segment.

Section 1. General Information (Instructions Page 65)

Date of study: N/A Time of study: N/A

Stream name: N/A

Location: N/A

Type of stream upstream of existing discharge or downstream of proposed discharge (check one).

☐ Perennial ☐ Intermittent with perennial pools

Section 2. Data Collection (Instructions Page 65)

Number of stream bends that are well defined: N/A

Number of stream bends that are moderately defined: N/A

Number of stream bends that are poorly defined: N/A

Number of riffles: N/A

Evidence of flow fluctuations (check one):

☐ Minor ☐ moderate ☐ severe

Indicate the observed stream uses and if there is evidence of flow fluctuations or channel obstruction/modification.

N/A

Stream transects

In the table below, provide the following information for each transect downstream of the existing or proposed discharges. Use a separate row for each transect.

Table 2.1(1) - Stream Transect Records

Stream type at transect Select riffle, run, glide, or pool. See Instructions, Definitions section.	**Transect location**	**Water surface width (ft)**	**Stream depths (ft)** at 4 to 10 points along each transect from the channel bed to the water surface. Separate the measurements with commas.
N/A	N/A	N/A	N/A
N/A	N/A	N/A	N/A
N/A	N/A	N/A	N/A
N/A	N/A	N/A	N/A
N/A	N/A	N/A	N/A
N/A	N/A	N/A	N/A
N/A	N/A	N/A	N/A
N/A	N/A	N/A	N/A
N/A	N/A	N/A	N/A
N/A	N/A	N/A	N/A

Section 3. Summarize Measurements (Instructions Page 65)

Streambed slope of entire reach, from USGS map in feet/feet: N/A

Approximate drainage area above the most downstream transect (from USGS map or county highway map, in square miles): N/A

Length of stream evaluated, in feet: N/A

Number of lateral transects made: N/A

Average stream width, in feet: N/A

Average stream depth, in feet: N/A

Average stream velocity, in feet/second: N/A

Instantaneous stream flow, in cubic feet/second: N/A

Indicate flow measurement method (type of meter, floating chip timed over a fixed distance, etc.): N/A

Size of pools (large, small, moderate, none): N/A

Maximum pool depth, in feet: N/A

DOMESTIC WASTEWATER PERMIT APPLICATION WORKSHEET 3.0: LAND DISPOSAL OF EFFLUENT

The following is required for renewal, new, and amendment permit applications.

Section 1. Type of Disposal System (Instructions Page 67)

Identify the method of land disposal:

- ☐ Surface application
- ☒ Irrigation
- ☐ Drip irrigation system
- ☐ Evaporation
- ☐ Other (describe in detail): N/A
- ☐ Subsurface application
- ☐ Subsurface soils absorption
- ☐ Subsurface area drip dispersal system
- ☐ Evapotranspiration beds

NOTE: All applicants without authorization or proposing new/amended subsurface disposal MUST complete and submit Worksheet 7.0.

For existing authorizations, provide Registration Number: N/A

Section 2. Land Application Site(s) (Instructions Page 67)

In table 3.0(1), provide the requested information for the land application sites. Include the agricultural or cover crop type (wheat, cotton, alfalfa, bermuda grass, native grasses, etc.), land use (golf course, hayland, pastureland, park, row crop, etc.), irrigation area, amount of effluent applied, and whether or not the public has access to the area. Specify the amount of land area and the amount of effluent that will be allotted to each agricultural or cover crop, if more than one crop will be used.

Table 3.0(1) – Land Application Site Crops

Crop Type & Land Use	Irrigation Area (acres)	Effluent Application (GPD)	Public Access? Y/N
Turf Grasses	140	0.43	Y
Cedar Breaks	190	1.08	N

Section 3. Storage and Evaporation Lagoons/Ponds (Instructions Page 67)

Table 3.0(2) – Storage and Evaporation Ponds

Pond Number	Surface Area (acres)	Storage Volume (acre-feet)	Dimensions	Liner Type
Fairway 17	3.2	42.4	250’ x 200’	36 mil Synthetic
Fairway 2	1.85	25.5	200’ x 160’ (See Attachment N.)	Undergoing rehab, information will be sent at a later date

Pond Number	Surface Area (acres)	Storage Volume (acre-feet)	Dimensions	Liner Type
Fairway 14	0.75	2.1	180’ x 155’ (See Attachment N.)	Undergoing rehab, information will be sent at a later date
Cedar Pond	5.57	61.0	665’ x 365’	40 mil HDPE

Attach a copy of a liner certification that was prepared, signed, and sealed by a Texas licensed professional engineer for each pond.

Attachment: See Attachment O. Rest of Ponds Liner Certifications will be provided once rehab is completed.

Section 4. Flood and Runoff Protection (Instructions Page 67)

Is the land application site within the 100-year frequency flood level?

☐ Yes ☒ No

If yes, describe how the site will be protected from inundation.

N/A

Provide the source used to determine the 100-year frequency flood level:

See Attachment L.

Provide a description of tailwater controls and rainfall run-on controls used for the land application site.

See Attachment G.

Section 5. Annual Cropping Plan (Instructions Page 67)

Attach an Annual Cropping Plan which includes a discussion of each of the following items. If not applicable, provide a detailed explanation indicating why. **Attachment**: See Attachment P.

- Soils map with crops
- Cool and warm season plant species

- Crop yield goals
- Crop growing season
- Crop nutrient requirements
- Additional fertilizer requirements
- Minimum/maximum harvest height (for grass crops)
- Supplemental watering requirements
- Crop salt tolerances
- Harvesting method/number of harvests
- Justification for not removing existing vegetation to be irrigated

Section 6. Well and Map Information (Instructions Page 68)

Attach a USGS map with the following information shown and labeled. If not applicable, provide a detailed explanation indicating why. **Attachment**: See Attachment Q.

- The boundaries of the land application site(s)
- Waste disposal or treatment facility site(s)
- On-site buildings
- Buffer zones
- Effluent storage and tailwater control facilities
- All water wells within 1-mile radius of the disposal site or property boundaries
- All springs and seeps onsite and within 500 feet of the property boundaries
- All surface waters in the state onsite and within 500 feet of the property boundaries
- All faults and sinkholes onsite and within 500 feet of the property

List and cross reference all water wells located within a half-mile radius of the disposal site or property boundaries shown on the USGS map in the following table. Attach additional pages as necessary to include all of the wells.

Table 3.0(3) – Water Well Data

Well ID	Well Use	Producing? Y/N	Open, cased, capped, or plugged?	Proposed Best Management Practice
5740602	Unused	N	See attached	N/A
5833101	Domestic	Data Not Avail.	See attached	Short irrigation times and spray heads located above the tree canopy
5833102	Public Supply	Data Not Avail.	See attached	Controlled and monitored turf irrigation with short cycle times
5833103	Domestic	Data Not Avail.	See attached	Short irrigation times and spray heads located above the tree
5833104	Irrigation	Data Not Avail.	See attached	Short irrigation times and spray heads located above the tree
5833401	Stock	Data Not Avail.	See attached	Controlled and monitored turf irrigation with short cycle times
5833402	Stock	Data Not Avail.	See attached	Controlled and monitored turf irrigation with short cycle times

Well ID	Well Use	Producing? Y/N	Open, cased, capped, or plugged?	Proposed Best Management Practice
5833402	Unused	N	See attached	N/A
5833404	Domestic	Data Not Avail.	See attached	Controlled and monitored turf irrigation with short cycle times
5833405	Unused	N	Cased	N/A
5833406	Domestic	Data Not Avail.	See attached	Controlled and monitored turf irrigation with short cycle times
5833407	Public Supply	Data Not Avail.	See attached	Controlled and monitored turf irrigation with short cycle times

If water quality data or well log information is available please include the information in an attachment listed by Well ID.

Attachment: N/A

Section 7. Groundwater Quality (Instructions Page 68)

Attach a Groundwater Quality Technical Report which assesses the impact of the wastewater disposal system on groundwater. This report shall include an evaluation of the water wells (including the information in the well table provided in Item 6. above), the wastewater application rate, and pond liners. Indicate by a check mark that this report is provided.

Attachment: N/A

Are groundwater monitoring wells available onsite? ☐ Yes ☒ No

Do you plan to install ground water monitoring wells or lysimeters around the land application site? ☐ Yes ☒ No

If yes, provide the proposed location of the monitoring wells or lysimeters on a site map.

Attachment: N/A

Section 8. Soil Map and Soil Analyses (Instructions Page 69)

A. Soil map

Attach a USDA Soil Survey map that shows the area to be used for effluent disposal.

Attachment: See Attachment R.

B. Soil analyses

Attach the laboratory results sheets from the soil analyses. **Note**: for renewal applications, the current annual soil analyses required by the permit are acceptable as long as the test date is less than one year prior to the submission of the application.

Attachment: See Attachment H and S.

List all USDA designated soil series on the proposed land application site. Attach additional pages as necessary.

Table 3.0(4) – Soil Data

Soil Series	Depth from Surface	Permeability	Available Water Capacity	Curve Number
PB-1: Brackett-Rock outcrop-Real Complex	18.0 in.	0.8 cm/hr	11.04 cm/hr	89
PB-2: Brackett-Rock outcrop-Real Complex	12.5 in	1.3 cm/hr	11.25 cm/hr	89

Section 9. Effluent Monitoring Data (Instructions Page 70)

Is the facility in operation?

☒ Yes ☐ No

If no, this section is not applicable and the worksheet is complete.

If yes, provide the effluent monitoring data for the parameters regulated in the existing permit. If a parameter is not regulated in the existing permit, enter N/A.

Table 3.0(5) – Effluent Monitoring Data

Date	30 Day Avg Flow MGD	BOD5 mg/l	TSS mg/l	pH	Chlorine Residual mg/l	Acres irrigated
Dec. 2024	0.554	5.6	0.2	7.59	2.39	240
Nov. 2024	0.568	3.5	1	7.7	3.2	240
Oct. 2024	0.507	2.4	1.6	7.73	4.03	240
Sep. 2024	0.554	3.75	4.25	7.54	2.14	240
Aug. 2024	0.576	1.5	1	7.8	3.48	240
July 2024	0.631	2.2	1.4	7.7	3.3	240
June 2024	0.648	2.75	1.25	7.84	2.74	240
May 2024	0.649	11.5	2	7.5	1.65	240
April 2024	0.583	5.6	2.2	7.55	2.33	240
March 2024	0.543	13.5	3.5	7.58	2.19	240
Feb. 2024	0.528	42.75	3	7.64	1.85	240
Jan. 2024	0.532	24.6	5.2	7.7	1.91	240
Dec. 2023	0.478	26.5	2.5	7.72	2.46	240
Nov. 2023	0.523	27.5	1.5	7.64	2.69	240
Oct. 2023	0.557	11	1.2	7.85	3.03	240
Sep. 2023	0.612	4.0	2.25	7.9	3.69	240
Aug. 2023	0.62	4.0	2.0	7.93	3.71	240

Date	30 Day Avg Flow MGD	BOD5 mg/l	TSS mg/l	pH	Chlorine Residual mg/l	Acres irrigated
July 2023	0.69	1.5	2.0	7.93	4.02	240
June 2023	0.675	25.5	3.75	7.76	4.44	240
May 2023	0.648	31.4	3.0	7.56	3.26	240
April 2023	0.559	34.25	2.75	7.6	2.76	240
March 2023	0.538	23.5	2.5	7.99	3.3	240
Feb. 2023	0.507	5.0	2.6	7.98	2.75	240
Jan. 2023	0.44	6.25	3.5	7.9	4.59	240

Provide a discussion of all persistent excursions above the permitted limits and any corrective actions taken.

See Attachment T.

DOMESTIC WASTEWATER PERMIT APPLICATION WORKSHEET 3.1: SURFACE LAND DISPOSAL OF EFFLUENT

The following is required for new and major amendment permit applications. Renewal and minor amendment permit applications may be asked for this worksheet on a case by case basis.

Section 1. Surface Disposal (Instructions Page 71)

Complete the item that applies for the method of disposal being used.

A. Irrigation

Area under irrigation, in acres: 340 acres

Design application frequency:

hours/day N/A **And** days/week N/A

Land grade (slope):

average percent (%): N/A

maximum percent (%): N/A

Design application rate in acre-feet/acre/year: N/A

Design total nitrogen loading rate, in lbs N/acre/year: N/A

Soil conductivity (mmhos/cm): N/A

Method of application: N/A

Attach a separate engineering report with the water balance and storage volume calculations, method of application, irrigation efficiency, and nitrogen balance.

Attachment: See Attachment X for Water Balance Calculations.

B. Evaporation ponds

Daily average effluent flow into ponds, in gallons per day: N/A

Attach a separate engineering report with the water balance and storage volume calculations.

Attachment: See Attachment X for Water Balance Calculations.

C. Evapotranspiration beds

Number of beds: N/A

Area of bed(s), in acres: N/A

Depth of bed(s), in feet: N/A

Void ratio of soil in the beds: N/A

Storage volume within the beds, in acre-feet: N/A

Attach a separate engineering report with the water balance and storage volume calculations, and a description of the lining.

Attachment: See Attachment X for Water Balance Calculations.

D. Overland flow

Area used for application, in acres: N/A

Slopes for application area, percent (%): N/A

Design application rate, in gpm/foot of slope width: N/A

Slope length, in feet: N/A

Design BOD_5 loading rate, in lbs BOD_5/acre/day: N/A

Design application frequency:

hours/day: N/A **And** days/week: N/A

Attach a separate engineering report with the method of application and design requirements according to *30 TAC Chapter 217*.

Attachment: See Attachment X for Water Balance Calculations.

Section 2. Edwards Aquifer (Instructions Page 72)

Is the facility subject to *30 TAC Chapter 213*, Edwards Aquifer Rules?

☐ Yes ☒ No

If **yes**, is the facility located on the Edwards Aquifer Recharge Zone?

☐ Yes ☒ No

If yes, attach a geological report addressing potential recharge features.

Attachment: N/A

-DOMESTIC WASTEWATER PERMIT APPLICATION WORKSHEET 3.2: SURFACE LAND DISPOSAL OF EFFLUENT

The following **is required** for **new and major amendment** permit applications. Renewal and minor amendments applicants may be asked for the worksheet on a case by case basis.

NOTE: All applicants proposing new/amended subsurface disposal MUST complete and submit Worksheet 7.0. This worksheet applies to any subsurface disposal system that **does not meet** the definition of a subsurface area drip dispersal system as defined in *30 TAC Chapter 222, Subsurface Area Drip Dispersal System.*

Section 1. Subsurface Application (Instructions Page 73)

Identify the type of system:

- ☐ Conventional Gravity Drainfield, Beds, or Trenches (new systems must be less than 5,000 GPD)
- ☐ Low Pressure Dosing
- ☐ Other, specify: N/A

Application area, in acres: N/A

Area of drainfield, in square feet: N/A

Application rate, in gal/square foot/day: N/A

Depth to groundwater, in feet: N/A

Area of trench, in square feet: N/A

Dosing duration per area, in hours: N/A

Number of beds: N/A

Dosing amount per area, in inches/day: N/A

Infiltration rate, in inches/hour: N/A

Storage volume, in gallons: N/A

Area of bed(s), in square feet: N/A

Soil Classification: N/A

Attach a separate engineering report with the information required in *30 TAC § 309.20,* excluding the requirements of *§* 309.20 b(3)(A) and (B) design analysis which may be asked for on a case by case basis. Include a description of the schedule of dosing basin rotation.

Attachment: N/A

Section 2. Edwards Aquifer (Instructions Page 73)

Is the subsurface system over the Edwards Aquifer Recharge Zone as mapped by TCEQ?

☐ Yes ☐ No

Is the subsurface system over the Edwards Aquifer Transition Zone as mapped by TCEQ?

☐ Yes ☐ No

If yes to either question, the subsurface system may be prohibited by *30 TAC §213.8*. Please call the Municipal Permits Team, at 512-239-4671, to schedule a pre-application meeting.

DOMESTIC WASTEWATER PERMIT APPLICATION WORKSHEET 3.3: SUBSURFACE AREA DRIP DISPERSAL (SADDS) LAND DISPOSAL OF EFFLUENT

The following **is required** for **new and major amendment** subsurface area drip dispersal system permit applications. Renewal and minor amendments applicants may be asked for the worksheet on a case by case basis.

NOTE: All applicants proposing new/amended subsurface disposal MUST complete and submit Worksheet 7.0. This worksheet applies to any subsurface disposal system that **meets** the definition of a subsurface area drip dispersal system as defined in *30 TAC Chapter 222, Subsurface Area Drip Dispersal System.*

Section 1. Administrative Information (Instructions Page 74)

A. Provide the legal name of all corporations or other business entities managed, owned, or otherwise closely related to the owner of the treatment facility:

B. N/A Is the owner of the land where the treatment facility is located the same as the owner of the treatment facility?

☐ Yes ☐ No

If **no**, provide the legal name of all corporations or other business entities managed, owned, or otherwise closely related to the owner of the land where the treatment facility is located.

N/A

C. Owner of the subsurface area drip dispersal system: N/A

D. Is the owner of the subsurface area drip dispersal system the same as the owner of the wastewater treatment facility or the site where the wastewater treatment facility is located?

☐ Yes ☐ No

If **no**, identify the names of all corporations or other business entities managed, owned, or otherwise closely related to the entity identified in Item 1.C.

N/A

E. Owner of the land where the subsurface area drip dispersal system is located: N/A

F. Is the owner of the land where the subsurface area drip dispersal system is located the same as owner of the wastewater treatment facility, the site where the wastewater treatment facility is located, or the owner of the subsurface area drip dispersal system?

☐ Yes ☐ No

If **no**, identify the name of all corporations or other business entities managed, owned, or otherwise closely related to the entity identified in item 1.E.

N/A

Section 2. Subsurface Area Drip Dispersal System (Instructions Page 74)

A. Type of system

☐ Subsurface Drip Irrigation

☐ Surface Drip Irrigation

☐ Other, specify: N/A

B. Irrigation operations

Application area, in acres: N/A

Infiltration Rate, in inches/hour: N/A

Average slope of the application area, percent (%): N/A

Maximum slope of the application area, percent (%): N/A

Storage volume, in gallons: N/A

Major soil series: N/A

Depth to groundwater, in feet: N/A

C. Application rate

Is the facility located **west** of the boundary shown in *30 TAC § 222.83* **and** also using a vegetative cover of non-native grasses over seeded with cool season grasses during the winter months (October-March)?

☐ Yes ☐ No

If yes, then the facility may propose a hydraulic application rate not to exceed 0.1 gal/square foot/day.

Is the facility located **east** of the boundary shown in *30 TAC § 222.83* **or** in any part of the state when the vegetative cover is any crop other than non-native grasses?

☐ Yes ☐ No

If **yes**, the facility must use the formula in *30 TAC §222.83* to calculate the maximum hydraulic application rate.

Do you plan to submit an alternative method to calculate the hydraulic application rate for approval by the executive director?

☐ Yes ☐ No

Hydraulic application rate, in gal/square foot/day: N/A

Nitrogen application rate, in lbs/gal/day: N/A

D. Dosing information

Number of doses per day: N/A

Dosing duration per area, in hours: N/A

Rest period between doses, in hours: N/A

Dosing amount per area, in inches/day: N/A

Number of zones: N/A

Does the proposed subsurface drip irrigation system use tree vegetative cover as a crop?

☐ Yes ☐ No

If **yes**, provide a vegetation survey by a certified arborist. Please call the Water Quality Assessment Team at (512) 239-4671 to schedule a pre-application meeting.

Attachment: N/A

Section 3. Required Plans (Instructions Page 74)

A. Recharge feature plan

Attach a Recharge Feature Plan with all information required in *30 TAC §222.79*.

Attachment: N/A

B. Soil evaluation

Attach a Soil Evaluation with all information required in *30 TAC §222.73*.

Attachment: N/A

C. Site preparation plan

Attach a Site Preparation Plan with all information required in *30 TAC §222.75*.

Attachment: N/A

D. Soil sampling/testing

Attach soil sampling and testing that includes all information required in *30 TAC §222.157*.

Attachment: N/A

Section 4. Floodway Designation (Instructions Page 75)

A. Site location

Is the existing/proposed land application site within a designated floodway?

☐ Yes ☐ No

B. Flood map

Attach either the FEMA flood map or alternate information used to determine the floodway.

Attachment: N/A

Section 5. Surface Waters in the State (Instructions Page 75)

A. Buffer Map

Attach a map showing appropriate buffers on surface waters in the state, water wells, and springs/seeps.

Attachment: N/A

B. Buffer variance request

Do you plan to request a buffer variance from water wells or waters in the state?

☐ Yes ☐ No

If yes, then attach the additional information required in *30 TAC § 222.81(c).*

Attachment: N/A

Section 6. Edwards Aquifer (Instructions Page 75)

A. Is the SADDS located over the Edwards Aquifer Recharge Zone as mapped by TCEQ?

☐ Yes ☐ No

B. Is the SADDS located over the Edwards Aquifer Transition Zone as mapped by TCEQ?

☐ Yes ☐ No

If yes to either question, then the SADDS may be prohibited by *30 TAC §213.8*. Please call the Municipal Permits Team at 512-239-4671 to schedule a pre-application meeting.

DOMESTIC WASTEWATER PERMIT APPLICATION WORKSHEET 4.0: POLLUTANT ANALYSIS REQUIREMENTS

The following **is required** for facilities with a permitted or proposed flow of **1.0 MGD or greater**, facilities with an approved **pretreatment** program, or facilities classified as a **major** facility. See instructions for further details.

This worksheet is not required minor amendments without renewal.

Section 1. Toxic Pollutants (Instructions Page 76)

For pollutants identified in Table 4.0(1), indicate the type of sample.

Grab ☐ Composite ☐

Date and time sample(s) collected: N/A

Table 4.0(1) – Toxics Analysis

Pollutant	AVG Effluent Conc. (µg/l)	MAX Effluent Conc. (µg/l)	Number of Samples	MAL (µg/l)
Acrylonitrile	N/A	N/A	N/A	50
Aldrin	N/A	N/A	N/A	0.01
Aluminum	N/A	N/A	N/A	2.5
Anthracene	N/A	N/A	N/A	10
Antimony	N/A	N/A	N/A	5
Arsenic	N/A	N/A	N/A	0.5
Barium	N/A	N/A	N/A	3
Benzene	N/A	N/A	N/A	10
Benzidine	N/A	N/A	N/A	50
Benzo(a)anthracene	N/A	N/A	N/A	5
Benzo(a)pyrene	N/A	N/A	N/A	5
Bis(2-chloroethyl)ether	N/A	N/A	N/A	10
Bis(2-ethylhexyl)phthalate	N/A	N/A	N/A	10
Bromodichloromethane	N/A	N/A	N/A	10
Bromoform	N/A	N/A	N/A	10
Cadmium	N/A	N/A	N/A	1
Carbon Tetrachloride	N/A	N/A	N/A	2
Carbaryl	N/A	N/A	N/A	5
Chlordane*	N/A	N/A	N/A	0.2
Chlorobenzene	N/A	N/A	N/A	10

Pollutant	AVG Effluent Conc. (µg/l)	MAX Effluent Conc. (µg/l)	Number of Samples	MAL (µg/l)
Chlorodibromomethane	N/A	N/A	N/A	10
Chloroform	N/A	N/A	N/A	10
Chlorpyrifos	N/A	N/A	N/A	0.05
Chromium (Total)	N/A	N/A	N/A	3
Chromium (Tri) **(*1)**	N/A	N/A	N/A	N/A
Chromium (Hex)	N/A	N/A	N/A	3
Copper	N/A	N/A	N/A	2
Chrysene	N/A	N/A	N/A	5
p-Chloro-m-Cresol	N/A	N/A	N/A	10
4,6-Dinitro-o-Cresol	N/A	N/A	N/A	50
p-Cresol	N/A	N/A	N/A	10
Cyanide **(*2)**	N/A	N/A	N/A	10
4,4'- DDD	N/A	N/A	N/A	0.1
4,4'- DDE	N/A	N/A	N/A	0.1
4,4'- DDT	N/A	N/A	N/A	0.02
2,4-D	N/A	N/A	N/A	0.7
Demeton (O and S)	N/A	N/A	N/A	0.20
Diazinon	N/A	N/A	N/A	0.5/0.1
1,2-Dibromoethane	N/A	N/A	N/A	10
m-Dichlorobenzene	N/A	N/A	N/A	10
o-Dichlorobenzene	N/A	N/A	N/A	10
p-Dichlorobenzene	N/A	N/A	N/A	10
3,3'-Dichlorobenzidine	N/A	N/A	N/A	5
1,2-Dichloroethane	N/A	N/A	N/A	10
1,1-Dichloroethylene	N/A	N/A	N/A	10
Dichloromethane	N/A	N/A	N/A	20
1,2-Dichloropropane	N/A	N/A	N/A	10
1,3-Dichloropropene	N/A	N/A	N/A	10
Dicofol	N/A	N/A	N/A	1
Dieldrin	N/A	N/A	N/A	0.02
2,4-Dimethylphenol	N/A	N/A	N/A	10
Di-n-Butyl Phthalate	N/A	N/A	N/A	10

Pollutant	AVG Effluent Conc. (µg/l)	MAX Effluent Conc. (µg/l)	Number of Samples	MAL (µg/l)
Diuron	N/A	N/A	N/A	0.09
Endosulfan I (alpha)	N/A	N/A	N/A	0.01
Endosulfan II (beta)	N/A	N/A	N/A	0.02
Endosulfan Sulfate	N/A	N/A	N/A	0.1
Endrin	N/A	N/A	N/A	0.02
Epichlorohydrin	N/A	N/A	N/A	---
Ethylbenzene	N/A	N/A	N/A	10
Ethylene Glycol	N/A	N/A	N/A	---
Fluoride	N/A	N/A	N/A	500
Guthion	N/A	N/A	N/A	0.1
Heptachlor	N/A	N/A	N/A	0.01
Heptachlor Epoxide	N/A	N/A	N/A	0.01
Hexachlorobenzene	N/A	N/A	N/A	5
Hexachlorobutadiene	N/A	N/A	N/A	10
Hexachlorocyclohexane (alpha)	N/A	N/A	N/A	0.05
Hexachlorocyclohexane (beta)	N/A	N/A	N/A	0.05
gamma-Hexachlorocyclohexane (Lindane)	N/A	N/A	N/A	0.05
Hexachlorocyclopentadiene	N/A	N/A	N/A	10
Hexachloroethane	N/A	N/A	N/A	20
Hexachlorophene	N/A	N/A	N/A	10
4,4'-Isopropylidenediphenol	N/A	N/A	N/A	1
Lead	N/A	N/A	N/A	0.5
Malathion	N/A	N/A	N/A	0.1
Mercury	N/A	N/A	N/A	0.005
Methoxychlor	N/A	N/A	N/A	2
Methyl Ethyl Ketone	N/A	N/A	N/A	50
Methyl tert-butyl ether	N/A	N/A	N/A	---
Mirex	N/A	N/A	N/A	0.02
Nickel	N/A	N/A	N/A	2
Nitrate-Nitrogen	N/A	N/A	N/A	100
Nitrobenzene	N/A	N/A	N/A	10

Pollutant	AVG Effluent Conc. (µg/l)	MAX Effluent Conc. (µg/l)	Number of Samples	MAL (µg/l)
N-Nitrosodiethylamine	N/A	N/A	N/A	20
N-Nitroso-di-n-Butylamine	N/A	N/A	N/A	20
Nonylphenol	N/A	N/A	N/A	333
Parathion (ethyl)	N/A	N/A	N/A	0.1
Pentachlorobenzene	N/A	N/A	N/A	20
Pentachlorophenol	N/A	N/A	N/A	5
Phenanthrene	N/A	N/A	N/A	10
Polychlorinated Biphenyls (PCB's) **(*3)**	N/A	N/A	N/A	0.2
Pyridine	N/A	N/A	N/A	20
Selenium	N/A	N/A	N/A	5
Silver	N/A	N/A	N/A	0.5
1,2,4,5-Tetrachlorobenzene	N/A	N/A	N/A	20
1,1,2,2-Tetrachloroethane	N/A	N/A	N/A	10
Tetrachloroethylene	N/A	N/A	N/A	10
Thallium	N/A	N/A	N/A	0.5
Toluene	N/A	N/A	N/A	10
Toxaphene	N/A	N/A	N/A	0.3
2,4,5-TP (Silvex)	N/A	N/A	N/A	0.3
Tributyltin (see instructions for explanation)	N/A	N/A	N/A	0.01
1,1,1-Trichloroethane	N/A	N/A	N/A	10
1,1,2-Trichloroethane	N/A	N/A	N/A	10
Trichloroethylene	N/A	N/A	N/A	10
2,4,5-Trichlorophenol	N/A	N/A	N/A	50
TTHM (Total Trihalomethanes)	N/A	N/A	N/A	10
Vinyl Chloride	N/A	N/A	N/A	10
Zinc	N/A	N/A	N/A	5

(*1) Determined by subtracting hexavalent Cr from total Cr.

(*2) Cyanide, amenable to chlorination or weak-acid dissociable.

(*3) The sum of seven PCB congeners 1242, 1254, 1221, 1232, 1248, 1260, and 1016.

Section 2. Priority Pollutants

For pollutants identified in Tables 4.0(2)A-E, indicate type of sample.

Grab ☐ Composite ☐

Date and time sample(s) collected: N/A

Table 4.0(2)A – Metals, Cyanide, and Phenols

Pollutant	**AVG Effluent Conc. (µg/l)**	**MAX Effluent Conc. (µg/l)**	**Number of Samples**	**MAL (µg/l)**
Antimony	N/A	N/A	N/A	5
Arsenic	N/A	N/A	N/A	0.5
Beryllium	N/A	N/A	N/A	0.5
Cadmium	N/A	N/A	N/A	1
Chromium (Total)	N/A	N/A	N/A	3
Chromium (Hex)	N/A	N/A	N/A	3
Chromium (Tri) **(*1)**	N/A	N/A	N/A	N/A
Copper	N/A	N/A	N/A	2
Lead	N/A	N/A	N/A	0.5
Mercury	N/A	N/A	N/A	0.005
Nickel	N/A	N/A	N/A	2
Selenium	N/A	N/A	N/A	5
Silver	N/A	N/A	N/A	0.5
Thallium	N/A	N/A	N/A	0.5
Zinc	N/A	N/A	N/A	5
Cyanide **(*2)**	N/A	N/A	N/A	10
Phenols, Total	N/A	N/A	N/A	10

(*1) Determined by subtracting hexavalent Cr from total Cr.

(*2) Cyanide, amenable to chlorination or weak-acid dissociable

Table 4.0(2)B – Volatile Compounds

Pollutant	AVG Effluent Conc. (µg/l)	MAX Effluent Conc. (µg/l)	Number of Samples	MAL (µg/l)
Acrolein	N/A	N/A	N/A	50
Acrylonitrile	N/A	N/A	N/A	50
Benzene	N/A	N/A	N/A	10
Bromoform	N/A	N/A	N/A	10
Carbon Tetrachloride	N/A	N/A	N/A	2
Chlorobenzene	N/A	N/A	N/A	10
Chlorodibromomethane	N/A	N/A	N/A	10
Chloroethane	N/A	N/A	N/A	50
2-Chloroethylvinyl Ether	N/A	N/A	N/A	10
Chloroform	N/A	N/A	N/A	10
Dichlorobromomethane [Bromodichloromethane]	N/A	N/A	N/A	10
1,1-Dichloroethane	N/A	N/A	N/A	10
1,2-Dichloroethane	N/A	N/A	N/A	10
1,1-Dichloroethylene	N/A	N/A	N/A	10
1,2-Dichloropropane	N/A	N/A	N/A	10
1,3-Dichloropropylene [1,3-Dichloropropene]	N/A	N/A	N/A	10
1,2-Trans-Dichloroethylene	N/A	N/A	N/A	10
Ethylbenzene	N/A	N/A	N/A	10
Methyl Bromide	N/A	N/A	N/A	50
Methyl Chloride	N/A	N/A	N/A	50
Methylene Chloride	N/A	N/A	N/A	20
1,1,2,2-Tetrachloroethane	N/A	N/A	N/A	10
Tetrachloroethylene	N/A	N/A	N/A	10
Toluene	N/A	N/A	N/A	10
1,1,1-Trichloroethane	N/A	N/A	N/A	10
1,1,2-Trichloroethane	N/A	N/A	N/A	10
Trichloroethylene	N/A	N/A	N/A	10
Vinyl Chloride	N/A	N/A	N/A	10

Table 4.0(2)C – Acid Compounds

Pollutant	AVG Effluent Conc. (µg/l)	MAX Effluent Conc. (µg/l)	Number of Samples	MAL (µg/l)
2-Chlorophenol	N/A	N/A	N/A	10
2,4-Dichlorophenol	N/A	N/A	N/A	10
2,4-Dimethylphenol	N/A	N/A	N/A	10
4,6-Dinitro-o-Cresol	N/A	N/A	N/A	50
2,4-Dinitrophenol	N/A	N/A	N/A	50
2-Nitrophenol	N/A	N/A	N/A	20
4-Nitrophenol	N/A	N/A	N/A	50
P-Chloro-m-Cresol	N/A	N/A	N/A	10
Pentalchlorophenol	N/A	N/A	N/A	5
Phenol	N/A	N/A	N/A	10
2,4,6-Trichlorophenol	N/A	N/A	N/A	10

Table 4.0(2)D – Base/Neutral Compounds

Pollutant	AVG Effluent Conc. (µg/l)	MAX Effluent Conc. (µg/l)	Number of Samples	MAL (µg/l)
Acenaphthene	N/A	N/A	N/A	10
Acenaphthylene	N/A	N/A	N/A	10
Anthracene	N/A	N/A	N/A	10
Benzidine	N/A	N/A	N/A	50
Benzo(a)Anthracene	N/A	N/A	N/A	5
Benzo(a)Pyrene	N/A	N/A	N/A	5
3,4-Benzofluoranthene	N/A	N/A	N/A	10
Benzo(ghi)Perylene	N/A	N/A	N/A	20
Benzo(k)Fluoranthene	N/A	N/A	N/A	5
Bis(2-Chloroethoxy)Methane	N/A	N/A	N/A	10
Bis(2-Chloroethyl)Ether	N/A	N/A	N/A	10
Bis(2-Chloroisopropyl)Ether	N/A	N/A	N/A	10
Bis(2-Ethylhexyl)Phthalate	N/A	N/A	N/A	10
4-Bromophenyl Phenyl Ether	N/A	N/A	N/A	10
Butyl benzyl Phthalate	N/A	N/A	N/A	10
2-Chloronaphthalene	N/A	N/A	N/A	10
4-Chlorophenyl phenyl ether	N/A	N/A	N/A	10
Chrysene	N/A	N/A	N/A	5
Dibenzo(a,h)Anthracene	N/A	N/A	N/A	5
1,2-(o)Dichlorobenzene	N/A	N/A	N/A	10
1,3-(m)Dichlorobenzene	N/A	N/A	N/A	10
1,4-(p)Dichlorobenzene	N/A	N/A	N/A	10
3,3-Dichlorobenzidine	N/A	N/A	N/A	5
Diethyl Phthalate	N/A	N/A	N/A	10
Dimethyl Phthalate	N/A	N/A	N/A	10
Di-n-Butyl Phthalate	N/A	N/A	N/A	10
2,4-Dinitrotoluene	N/A	N/A	N/A	10
2,6-Dinitrotoluene	N/A	N/A	N/A	10
Di-n-Octyl Phthalate	N/A	N/A	N/A	10
1,2-Diphenylhydrazine (as Azo-benzene)	N/A	N/A	N/A	20

Pollutant	AVG Effluent Conc. (µg/l)	MAX Effluent Conc. (µg/l)	Number of Samples	MAL (µg/l)
Fluoranthene	N/A	N/A	N/A	10
Fluorene	N/A	N/A	N/A	10
Hexachlorobenzene	N/A	N/A	N/A	5
Hexachlorobutadiene	N/A	N/A	N/A	10
Hexachlorocyclo-pentadiene	N/A	N/A	N/A	10
Hexachloroethane	N/A	N/A	N/A	20
Indeno(1,2,3-cd)pyrene	N/A	N/A	N/A	5
Isophorone	N/A	N/A	N/A	10
Naphthalene	N/A	N/A	N/A	10
Nitrobenzene	N/A	N/A	N/A	10
N-Nitrosodimethylamine	N/A	N/A	N/A	50
N-Nitrosodi-n-Propylamine	N/A	N/A	N/A	20
N-Nitrosodiphenylamine	N/A	N/A	N/A	20
Phenanthrene	N/A	N/A	N/A	10
Pyrene	N/A	N/A	N/A	10
1,2,4-Trichlorobenzene	N/A	N/A	N/A	10

Table 4.0(2)E – Pesticides

Pollutant	AVG Effluent Conc. (µg/l)	MAX Effluent Conc. (µg/l)	Number of Samples	MAL (µg/l)
Aldrin	N/A	N/A	N/A	0.01
alpha-BHC (Hexachlorocyclohexane)	N/A	N/A	N/A	0.05
beta-BHC (Hexachlorocyclohexane)	N/A	N/A	N/A	0.05
gamma-BHC (Hexachlorocyclohexane)	N/A	N/A	N/A	0.05
delta-BHC (Hexachlorocyclohexane)	N/A	N/A	N/A	0.05
Chlordane	N/A	N/A	N/A	0.2
4,4-DDT	N/A	N/A	N/A	0.02
4,4-DDE	N/A	N/A	N/A	0.1
4,4,-DDD	N/A	N/A	N/A	0.1
Dieldrin	N/A	N/A	N/A	0.02
Endosulfan I (alpha)	N/A	N/A	N/A	0.01
Endosulfan II (beta)	N/A	N/A	N/A	0.02
Endosulfan Sulfate	N/A	N/A	N/A	0.1
Endrin	N/A	N/A	N/A	0.02
Endrin Aldehyde	N/A	N/A	N/A	0.1
Heptachlor	N/A	N/A	N/A	0.01
Heptachlor Epoxide	N/A	N/A	N/A	0.01
PCB-1242	N/A	N/A	N/A	0.2
PCB-1254	N/A	N/A	N/A	0.2
PCB-1221	N/A	N/A	N/A	0.2
PCB-1232	N/A	N/A	N/A	0.2
PCB-1248	N/A	N/A	N/A	0.2
PCB-1260	N/A	N/A	N/A	0.2
PCB-1016	N/A	N/A	N/A	0.2
Toxaphene	N/A	N/A	N/A	0.3

* For PCBS, if all are non-detects, enter the highest non-detect preceded by a “<”.

Section 3. Dioxin/Furan Compounds

A. Indicate which of the following compounds from may be present in the influent from a contributing industrial user or significant industrial user. Check all that apply.

☐ 2,4,5-trichlorophenoxy acetic acid

Common Name 2,4,5-T, CASRN 93-76-5

☐ 2-(2,4,5-trichlorophenoxy) propanoic acid

Common Name Silvex or 2,4,5-TP, CASRN 93-72-1

☐ 2-(2,4,5-trichlorophenoxy) ethyl 2,2-dichloropropionate

Common Name Erbon, CASRN 136-25-4

☐ 0,0-dimethyl 0-(2,4,5-trichlorophenyl) phosphorothioate

Common Name Ronnel, CASRN 299-84-3

☐ 2,4,5-trichlorophenol

Common Name TCP, CASRN 95-95-4

☐ hexachlorophene

Common Name HCP, CASRN 70-30-4

For each compound identified, provide a brief description of the conditions of its/their presence at the facility.

N/A

B. Do you know or have any reason to believe that 2,3,7,8 Tetrachlorodibenzo-P-Dioxin (TCDD) or any congeners of TCDD may be present in your effluent?

☐ Yes ☐ No

If **yes**, provide a brief description of the conditions for its presence.

N/A

C. If any of the compounds in Subsection A **or** B are present, complete Table 4.0(2)F.

For pollutants identified in Table 4.0(2)F, indicate the type of sample.

Grab ☐ Composite ☐

Date and time sample(s) collected: N/A

Table 4.0(2)F – Dioxin/Furan Compounds

Compound	Toxic Equivalency Factors	Wastewater Concentration (ppq)	Wastewater Equivalents (ppq)	Sludge Concentration (ppt)	Sludge Equivalents (ppt)	MAL (ppq)	
2,3,7,8 TCDD	1	N/A	N/A	N/A	N/A	10	
1,2,3,7,8 PeCDD	0.5	N/A	N/A	N/A	N/A	50	
2,3,7,8 HxCDDs	0.1	N/A	N/A	N/A	N/A	50	
1,2,3,4,6,7,8 HpCDD	0.01	N/A	N/A	N/A	N/A	50	
2,3,7,8 TCDF	0.1	N/A	N/A	N/A	N/A	10	
1,2,3,7,8 PeCDF	0.05	N/A	N/A	N/A	N/A	50	
2,3,4,7,8 PeCDF	0.5	N/A	N/A	N/A	N/A	50	
2,3,7,8 HxCDFs	0.1	N/A	N/A	N/A	N/A	50	
2,3,4,7,8 HpCDFs	0.01	N/A	N/A	N/A	N/A	50	
OCDD	0.0003	N/A	N/A	N/A	N/A	100	
OCDF	0.0003	N/A	N/A	N/A	N/A	100	
PCB 77	0.0001	N/A	N/A	N/A	N/A	0.5	
PCB 81	0.0003	N/A	N/A	N/A	N/A	0.5	
PCB 126	0.1	N/A	N/A	N/A	N/A	0.5	
PCB 169	0.03	N/A	N/A	N/A	N/A	0.5	
Total	N/A	N/A	N/A	N/A	N/A	N/A	N/A

NOT APPLICABLE

DOMESTIC WASTEWATER PERMIT APPLICATION WORKSHEET 5.0: TOXICITY TESTING REQUIREMENTS

The following **is required** for facilities with a current operating design flow of**1.0 MGD or greater**, with an EPA-approved **pretreatment** program (or those required to have one under 40 CFR Part 403), or are required to perform Whole Effluent Toxicity testing. See Page 86 of the instructions for further details.

This worksheet is not required minor amendments without renewal.

Section 1. Required Tests

Indicate the number of 7-day chronic or 48-hour acute Whole Effluent Toxicity (WET) tests performed in the four and one-half years prior to submission of the application.

7-day Chronic: N/A

48-hour Acute: N/A

Section 2. Toxicity Reduction Evaluations (TREs)

Has this facility completed a TRE in the past four and a half years? Or is the facility currently performing a TRE?

☐ Yes ☐ No

If yes, describe the progress to date, if applicable, in identifying and confirming the toxicant.

N/A

Section 3. Summary of WET Tests

If the required biomonitoring test information has not been previously submitted via both the Discharge Monitoring Reports (DMRs) and the Table 1 (as found in the permit), provide a summary of the testing results for all valid and invalid tests performed over the past four and one-half years. Make additional copies of this table as needed.

Table 5.0(1) Summary of WET Tests

Test Date	Test Species	NOEC Survival	NOEC Sub-lethal
N/A	N/A	N/A	N/A
N/A	N/A	N/A	N/A
N/A	N/A	N/A	N/A
N/A	N/A	N/A	N/A
N/A	N/A	N/A	N/A
N/A	N/A	N/A	N/A
N/A	N/A	N/A	N/A
N/A	N/A	N/A	N/A
N/A	N/A	N/A	N/A
N/A	N/A	N/A	N/A
N/A	N/A	N/A	N/A
N/A	N/A	N/A	N/A
N/A	N/A	N/A	N/A
N/A	N/A	N/A	N/A
N/A	N/A	N/A	N/A

DOMESTIC WASTEWATER PERMIT APPLICATION WORKSHEET 6.0: INDUSTRIAL WASTE CONTRIBUTION

The following **is required** for **all publicly owned treatment works**.

Section 1. All POTWs (Instructions Page 87)

A. Industrial users (IUs)

Provide the number of each of the following types of industrial users (IUs) that discharge to your POTW and the daily flows from each user. See the Instructions for definitions of Categorical IUs, Significant IUs – non-categorical, and Other IUs.

If there are no users, enter 0 (zero).

Categorical IUs:

Number of IUs: 0

Average Daily Flows, in MGD: N/A

Significant IUs – non-categorical:

Number of IUs: 0

Average Daily Flows, in MGD: N/A

Other IUs:

Number of IUs: 0

Average Daily Flows, in MGD: N/A

B. Treatment plant interference

In the past three years, has your POTW experienced treatment plant interference (see instructions)?

☐ Yes ☒ No

If yes, identify the dates, duration, description of interference, and probable cause(s) and possible source(s) of each interference event. Include the names of the IUs that may have caused the interference.

N/A

C. Treatment plant pass through

In the past three years, has your POTW experienced pass through (see instructions)?

☐ Yes ☒ No

If yes, identify the dates, duration, a description of the pollutants passing through the treatment plant, and probable cause(s) and possible source(s) of each pass through event. Include the names of the IUs that may have caused pass through.

N/A

D. Pretreatment program

Does your POTW have an approved pretreatment program?

☐ Yes ☒ No

If yes, complete Section 2 only of this Worksheet.

Is your POTW required to develop an approved pretreatment program?

☐ Yes ☒ No

If yes, complete Section 2.c. and 2.d. only, and skip Section 3.

If no to either question above, skip Section 2 and complete Section 3 for each significant industrial user and categorical industrial user.

Section 2. POTWs with Approved Programs or Those Required to Develop a Program (Instructions Page 87)

A. Substantial modifications

Have there been any **substantial modifications** to the approved pretreatment program that have not been submitted to the TCEQ for approval according to *40 CFR §403.18*?

☐ Yes ☒ No

If yes, identify the modifications that have not been submitted to TCEQ, including the purpose of the modification.

N/A

B. Non-substantial modifications

Have there been any **non-substantial modifications** to the approved pretreatment program that have not been submitted to TCEQ for review and acceptance?

☐ Yes ☒ No

If yes, identify all non-substantial modifications that have not been submitted to TCEQ, including the purpose of the modification.

N/A

C. Effluent parameters above the MAL

In Table 6.0(1), list all parameters measured above the MAL in the POTW's effluent monitoring during the last three years. Submit an attachment if necessary.

Table 6.0(1) – Parameters Above the MAL

Pollutant	Concentration	MAL	Units	Date
N/A	N/A	N/A	N/A	N/A
N/A	N/A	N/A	N/A	N/A
N/A	N/A	N/A	N/A	N/A
N/A	N/A	N/A	N/A	N/A
N/A	N/A	N/A	N/A	N/A
N/A	N/A	N/A	N/A	N/A

D. Industrial user interruptions

Has any SIU, CIU, or other IU caused or contributed to any problems (excluding interferences or pass throughs) at your POTW in the past three years?

☐ Yes ☒ No

If yes, identify the industry, describe each episode, including dates, duration, description of the problems, and probable pollutants.

N/A

Section 3. Significant Industrial User (SIU) Information and Categorical Industrial User (CIU) (Instructions Page 88)

A. General information

Company Name: N/A

SIC Code: N/A

Contact name: N/A

Address: N/A

City, State, and Zip Code: N/A

Telephone number: N/A

Email address: N/A

B. Process information

Describe the industrial processes or other activities that affect or contribute to the SIU(s) or CIU(s) discharge (i.e., process and non-process wastewater).

N/A

C. Product and service information

Provide a description of the principal product(s) or services performed.

N/A

D. Flow rate information

See the Instructions for definitions of "process" and "non-process wastewater."

Process Wastewater:

Discharge, in gallons/day: N/A

Discharge Type: ☐ Continuous ☐ Batch ☐ Intermittent

Non-Process Wastewater:

Discharge, in gallons/day: N/A

Discharge Type: ☐ Continuous ☐ Batch ☐ Intermittent

E. Pretreatment standards

Is the SIU or CIU subject to technically based local limits as defined in the *i*nstructions?

☐ Yes ☒ No

Is the SIU or CIU subject to categorical pretreatment standards found in *40 CFR Parts 405-471*?

☐ Yes ☒ No

If subject to categorical pretreatment standards, indicate the applicable category and subcategory for each categorical process.

Category: Subcategories: N/A

Click or tap here to enter text. N/A

Category: N/A

Subcategories: N/A

Category: N/A

Subcategories: N/A

Category: N/A

Subcategories: N/A

Category: N/A

Subcategories: N/A

F. Industrial user interruptions

Has the SIU or CIU caused or contributed to any problems (e.g., interferences, pass through, odors, corrosion, blockages) at your POTW in the past three years?

☐ Yes ☐ No

If yes, identify the SIU, describe each episode, including dates, duration, description of problems, and probable pollutants.

N/A

NOT APPLICABLE

WORKSHEET 7.0

TEXAS COMMISSION ON ENVIRONMENTAL QUALITY

CLASS V INJECTION WELL INVENTORY/AUTHORIZATION FORM

Submit the completed form to:

TCEQ
IUC Permits Team
Radioactive Materials Division
MC-233
PO Box 13087
Austin, Texas 78711-3087
512-239-6466

For TCEQ Use Only
Reg. No._____
Date Received_____
Date Authorized_____

Section 1. General Information (Instructions Page 90)

1. TCEQ Program Area

Program Area (PST, VCP, IHW, etc.): N/A

Program ID: N/A

Contact Name: N/A

Phone Number: N/A

2. Agent/Consultant Contact Information

Contact Name: N/A

Address: N/A

City, State, and Zip Code: N/A

Phone Number: N/A

3. Owner/Operator Contact Information

☐ Owner ☐ Operator

Owner/Operator Name: N/A

Contact Name: N/A

Address: N/A

City, State, and Zip Code: N/A

Phone Number: N/A

4. Facility Contact Information

Facility Name: N/A

Address: N/A

City, State, and Zip Code: N/A

Location description (if no address is available): N/A

Facility Contact Person: N/A

Phone Number: N/A

5. **Latitude and Longitude, in degrees-minutes-seconds**

Latitude: N/A

Longitude: N/A

Method of determination (GPS, TOPO, etc.): N/A

Attach topographic quadrangle map as attachment A.

6. **Well Information**

Type of Well Construction, select one:

- ☐ Vertical Injection
- ☐ Subsurface Fluid Distribution System
- ☐ Infiltration Gallery
- ☐ Temporary Injection Points
- ☐ Other, Specify: N/A

Number of Injection Wells: N/A

7. **Purpose**

Detailed Description regarding purpose of Injection System:

N/A

Attach a Site Map as Attachment B (Attach the Approved Remediation Plan, if appropriate.)

8. **Water Well Driller/Installer**

Water Well Driller/Installer Name: N/A

City, State, and Zip Code: N/A

Phone Number: N/A

License Number: N/A

Section 2. Proposed Down Hole Design

Attach a diagram signed and sealed by a licensed engineer as Attachment C.

Table 7.0(1) – Down Hole Design Table

Name of String	Size	Setting Depth	Sacks Cement/Grout – Slurry Volume – Top of Cement	Hole Size	Weight (lbs/ft) PVC/Steel
Casing	N/A	N/A	N/A	N/A	N/A
Tubing	N/A	N/A	N/A	N/A	N/A
Screen	N/A	N/A	N/A	N/A	N/A

Section 3. Proposed Trench System, Subsurface Fluid Distribution System, or Infiltration Gallery

Attach a diagram signed and sealed by a licensed engineer as Attachment D.

System(s) Dimensions: N/A

System(s) Construction: N/A

Section 4. Site Hydrogeological and Injection Zone Data

1. Name of Contaminated Aquifer: N/A

2. Receiving Formation Name of Injection Zone: N/A

3. Well/Trench Total Depth: N/A

4. Surface Elevation: N/A

5. Depth to Ground Water: N/A

6. Injection Zone Depth: N/A

7. Injection Zone vertically isolated geologically? ☐ Yes ☐ No

Impervious Strata between Injection Zone and nearest Underground Source of Drinking Water:

Name: N/A

Thickness: N/A

8. Provide a list of contaminants and the levels (ppm) in contaminated aquifer

Attach as Attachment E.

9. Horizontal and Vertical extent of contamination and injection plume

Attach as Attachment F.

10. Formation (Injection Zone) Water Chemistry (Background levels) TDS, etc.

Attach as Attachment G.

11. Injection Fluid Chemistry in PPM at point of injection

Attach as Attachment H.

12. Lowest Known Depth of Ground Water with < 10,000 PPM TDS: N/A

13. Maximum injection Rate/Volume/Pressure: N/A

14. Water wells within 1/4 mile radius (attach map as Attachment I): N/A

15. Injection wells within 1/4 mile radius (attach map as Attachment J): N/A

16. Monitor wells within 1/4 mile radius (attach drillers logs and map as Attachment K): N/A

17. Sampling frequency: N/A

18. Known hazardous components in injection fluid: N/A

Section 5. Site History

1. Type of Facility: N/A
2. Contamination Dates: N/A
3. Original Contamination (VOCs, TPH, BTEX, etc.) and Concentrations (attach as Attachment L): N/A
4. Previous Remediation (attach results of any previous remediation as attachment M): N/A

NOTE: Authorization Form should be completed in detail and authorization given by the TCEQ before construction, operation, and/or conversion can begin. Attach additional pages as necessary.

Class V Injection Well Designations

5A07 Heat Pump/AC return (IW used for groundwater to heat and/or cool buildings)
5A19 Industrial Cooling Water Return Flow (IW used to cool industrial process equipment)
5B22 Salt Water Intrusion Barrier (IW used to inject fluids to prevent the intrusion of salt water into an aquifer)
5D02 Storm Water Drainage (IW designed for the disposal of rain water)
5D04 Industrial Stormwater Drainage Wells (IW designed for the disposal of rain water associated with industrial facilities)
5F01 Agricultural Drainage (IW that receive agricultural runoff)
5R21 Aquifer Recharge (IW used to inject fluids to recharge an aquifer)
5S23 Subsidence Control Wells (IW used to control land subsidence caused by ground water withdrawal)
5W09 Untreated Sewage
5W10 Large Capacity Cesspools (Cesspools that are designed for 5,000 gpd or greater)
5W11 Large Capacity Septic systems (Septic systems designed for 5,000 gpd or greater)
5W12 WTTP disposal
5W20 Industrial Process Waste Disposal Wells
5W31 Septic System (Well Disposal method)
5W32 Septic System Drainfield Disposal
5X13 Mine Backfill (IW used to control subsidence, dispose of mining byproducts, and/or fill sections of a mine)
5X25 Experimental Wells (Pilot Test) (IW used to test new technologies or tracer dye studies)
5X26 Aquifer Remediation (IW used to clean up, treat, or prevent contamination of a USDW)
5X27 Other Wells
5X28 Motor Vehicle Waste Disposal Wells (IW used to dispose of waste from a motor vehicle site - These are currently banned)
5X29 Abandoned Drinking Water Wells (waste disposal)

Attachments Table of Contents

Attachment A – Core Data Form
Administrative Report 1.0 Section 3

Attachment B – WWTP Operator Information
Technical Report 1.0 Section 8

Attachment C – Plain Language Summary
Administrative Report 1.0 Section 8

Attachment D – Public Involvement Plan Form
Administrative Report 1.0 Section 8

Attachment E – USGS Map
Administrative Report 1.0 Section 13

Attachment F – Process Flow Diagrams
Technical Report 1.0 Section 2

Attachment G – Site Drawings
Technical Report 1.0 Section 3

Attachment H – Annual Soil Analysis of Existing TLAP Area
Technical Report 1.0 Section 6
Domestic Worksheet 3.0 Section 8

Attachment I – Tailwater Controls and Rainfall Runoff Controls
Technical Report 1.0 Section 6
Domestic Worksheet 3.0 Section 4

Attachment J – Pollutant Analysis of Treated Effluent
Technical Report 1.0 Section 7

Attachment K – Influent Organic Strength
Technical Report 1.1 Section 2

Attachment L – FEMA Maps
Technical Report 1.1 Section 5
Domestic Worksheet 3.0 Section 4

Attachment M – Sewage Sludge Management Plan
Technical Report 1.1 Section 7

Attachment N – Ponds 2 and 14 Drawings
Domestic Worksheet 3.0 Section 3

Attachment O - Liner Certification for Cedar Breaks Pond
Domestic Worksheet 3.0 Section 3

Attachment P – Annual Cropping Plan
Domestic Worksheet 3.0 Section 5

Attachment Q – Water Well Data
Domestic Worksheet 3.0 Section 6

Attachment R – Soil Maps
Domestic Worksheet 3.0 Section 8

Attachment S – Soil Analysis for Proposed TLAP Area
Domestic Worksheet 3.0 Section 8

Attachment T – Monthly Effluent Reports
Domestic Worksheet 3.0 Section 9

Attachment U – Laboratory Accreditation
Technical Report 1.0 Section 14

Attachment V – Copy of Payment
Administrative Report 1.0 Section 1

Attachment W – Current Permit

Attachment X – Water Balance and Storage Calculations

Attachment Y – Highland Lake's Golf Course Reuse Confirmation Letter

Attachment A

Core Data Form

TCEQ Use Only

TCEQ Core Data Form

For detailed instructions on completing this form, please read the Core Data Form Instructions or call 512-239-5175.

SECTION I: General Information

1. Reason for Submission (*If other is checked please describe in space provided.*)

☐ New Permit, Registration or Authorization (*Core Data Form should be submitted with the program application.*)

☐ Renewal *(Core Data Form should be submitted with the renewal form)*

☒ Other **Major Amendment**

2. Customer Reference Number *(if issued)*	Follow this link to search for CN or RN numbers in Central Registry**	**3. Regulated Entity Reference Number** *(if issued)*
CN 600622849		**RN 101609683**

SECTION II: Customer Information

4. General Customer Information	**5. Effective Date for Customer Information Updates** (mm/dd/yyyy)	01/01/2029

☐ New Customer ☒ Update to Customer Information ☐ Change in Regulated Entity Ownership
☐ Change in Legal Name (Verifiable with the Texas Secretary of State or Texas Comptroller of Public Accounts)

The Customer Name submitted here may be updated automatically based on what is current and active with the Texas Secretary of State (SOS) or Texas Comptroller of Public Accounts (CPA).

6. Customer Legal Name *(If an individual, print last name first: eg: Doe, John)*	*If new Customer, enter previous Customer below:*
City of Lago Vista	

7. TX SOS/CPA Filing Number	**8. TX State Tax ID** (11 digits)	**9. Federal Tax ID** (9 digits)	**10. DUNS Number** *(if applicable)*

11. Type of Customer:	☐ Corporation	☐ Individual	Partnership: ☐ General ☐ Limited
Government: ☒ City ☐ County ☐ Federal ☐ Local ☐ State ☐ Other		☐ Sole Proprietorship	☐ Other:

12. Number of Employees	**13. Independently Owned and Operated?**
☐ 0-20 ☒ 21-100 ☐ 101-250 ☐ 251-500 ☐ 501 and higher	☐ **Yes** ☒ **No**

14. Customer Role (Proposed or Actual) – *as it relates to the Regulated Entity listed on this form. Please check one of the following*

☐ Owner ☐ Operator ☒ Owner & Operator
☐ Occupational Licensee ☐ Responsible Party ☐ VCP/BSA Applicant
☐ Other:

15. Mailing Address:	5803 Thunderbird Street						
	City	Lago Vista	**State**	TX	**ZIP**	78645	**ZIP + 4**	5864

16. Country Mailing Information *(if outside USA)*	**17. E-Mail Address** *(if applicable)*

18. Telephone Number	19. Extension or Code	20. Fax Number *(if applicable)*
(512) 267-1155		( ) -

SECTION III: Regulated Entity Information

21. General Regulated Entity Information *(If 'New Regulated Entity" is selected, a new permit application is also required.)*

☐ New Regulated Entity ☐ Update to Regulated Entity Name ☒ Update to Regulated Entity Information

The Regulated Entity Name submitted may be updated, in order to meet TCEQ Core Data Standards (removal of organizational endings such as Inc, LP, or LLC).

22. Regulated Entity Name *(Enter name of the site where the regulated action is taking place.)*

City of Lago Vista WWTP

23. Street Address of the Regulated Entity: ***(No PO Boxes)***								
	21001 Seminole Drive							
	City	Lago Vista	**State**	TX	**ZIP**	78645	**ZIP + 4**	
24. County	Travis							

If no Street Address is provided, fields 25-28 are required.

25. Description to Physical Location:	Located W of Country Club Dr. and Lago Vista Golf Course on the E shore of Lake Travis approximately 5 miles W of Jonestown.

26. Nearest City	State	Nearest ZIP Code
Lago Vista	TX	78645

Latitude/Longitude are required and may be added/updated to meet TCEQ Core Data Standards. (Geocoding of the Physical Address may be used to supply coordinates where none have been provided or to gain accuracy).

27. Latitude (N) In Decimal:	30.451944		28. Longitude (W) In Decimal:	97.998611	
Degrees	Minutes	Seconds	Degrees	Minutes	Seconds
30	27	07	97	59	55

29. Primary SIC Code (4 digits)	30. Secondary SIC Code (4 digits)	31. Primary NAICS Code (5 or 6 digits)	32. Secondary NAICS Code (5 or 6 digits)
4952		221320	

33. What is the Primary Business of this entity? *(Do not repeat the SIC or NAICS description.)*

Wastewater Treatment Plant for the City

34. Mailing Address:	**5803 Thunderbird Street**							
	City	**Lago Vista**	**State**	**TX**	**ZIP**	**78645**	**ZIP + 4**	**5864**
35. E-Mail Address:								

36. Telephone Number	37. Extension or Code	38. Fax Number *(if applicable)*
(512) 267-1155		( ) -

39. TCEQ Programs and ID Numbers Check all Programs and write in the permits/registration numbers that will be affected by the updates submitted on this form. See the Core Data Form instructions for additional guidance.

☐ Dam Safety	☐ Districts	☐ Edwards Aquifer	☐ Emissions Inventory Air	☐ Industrial Hazardous Waste
☐ Municipal Solid Waste	☐ New Source Review Air	☐ OSSF	☐ Petroleum Storage Tank	☐ PWS
☐ Sludge	☐ Storm Water	☐ Title V Air	☐ Tires	☐ Used Oil
☐ Voluntary Cleanup	☐ Wastewater	☐ Wastewater Agriculture	☐ Water Rights	☐ Other:

SECTION IV: Preparer Information

40. Name:	Ankita Jain	**41. Title:**	Project Manager

42. Telephone Number	**43. Ext./Code**	**44. Fax Number**	**45. E-Mail Address**
(512) 539-1972		( ) -	AJain@GarverUSA.com

SECTION V: Authorized Signature

46. By my signature below, I certify, to the best of my knowledge, that the information provided in this form is true and complete, and that I have signature authority to submit this form on behalf of the entity specified in Section II, Field 6 and/or as required for the updates to the ID numbers identified in field 39.

Company:	City of Lago Vista	**Job Title:**	Director of Public Works
Name *(In Print):*	Taylor Whichard	**Phone:**	(512) 267- **1155**
Signature:	Taylor Whichard	**Date:**	4/30/25

Attachment B

Lago Vista WWTP Operator Information

Lago Vista WWTP Operator Information

1. Jose Antonio Munoz
    - Class B Wastewater Treatment Operator
    - License #WW0053954
2. Christopher C. Maxwell
    - Class C Wastewater Treatment Operator
    - License #WW0047891
3. Luis Enrique Soto Contreras
    - Class C Wastewater Treatment Operator
    - License #WW0077088
4. Thomas Craig Flarida
    - Class D Wastewater Treatment Operator
    - License #WW0072806

Attachment C

Plain Language Summary

TEXAS COMMISSION ON ENVIRONMENTAL QUALITY

SUMMARY OF APPLICATION IN PLAIN LANGUAGE FOR TPDES OR TLAP PERMIT APPLICATIONS

Summary of Application (in plain language) Template and Instructions for Texas Pollutant Discharge Elimination System (TPDES) and Texas Land Application (TLAP) Permit Applications

Applicants should use this template to develop a plain language summary of your facility and application as required by Title 30, Texas Administrative Code (30 TAC), Chapter 39, Subchapter H. You may modify the template as necessary to accurately describe your facility as long as the summary includes the following information: (1) the function of the proposed plant or facility; (2) the expected output of the proposed plant or facility; (3) the expected pollutants that may be emitted or discharged by the proposed plant or facility; and (4) how you will control those pollutants, so that the proposed plant will not have an adverse impact on human health or the environment.

Fill in the highlighted areas below to describe your facility and application in plain language. Instructions and examples are provided below. Make any other edits necessary to improve readability or grammar and to comply with the rule requirements. After filling in the information for your facility delete these instructions.

If you are subject to the alternative language notice requirements in 30 TAC Section 39.426, **you must provide a translated copy of the completed plain language summary in the appropriate alternative language as part of your application package**. For your convenience, a Spanish template has been provided below.

ENGLISH TEMPLATE FOR TPDES or TLAP NEW/RENEWAL/AMENDMENT APPLICATIONS DOMESTIC WASTEWATER/STORMWATER

The following summary is provided for this pending water quality permit application being reviewed by the Texas Commission on Environmental Quality as required by 30 TAC Chapter 39. The information provided in this summary may change during the technical review of the application and is not a federal enforceable representation of the permit application.

The City of Lago Vista (CN600622849) operates the City of Lago Vista Wastewater Treatment Plant (RN101609683), a complete mixed activated sludge system with chlorine disinfection. The facility is located at 21011 Seminole Dr, in Lago Vista, Travis County, Texas 78645. This application is for a major amendment to the TLAP permit (WQ001752001) for an existing public wastewater supply system. The permit authorizes the discharge of domestic wastewater at an annual average flow of effluent shall not exceed 1.0 MGD in the Interim Phase (Current) and 1.5 MGD in the Final Phase.This permit will not authorize a discharge of pollutants into water in the state.

Discharges from the facility are expected to contain five-day carbonaceous biochemical oxygen demand (CBOD5), total suspended solids (TSS), ammonia nitrogen (NH3-N), Total Phosphorus (TP), Hydrogen Peroxide and Escherichia coli. Additional potential pollutants are included in the Domestic Technical Report 1.0, Section 7. Pollutant Analysis of Treated

Effluent in the permit application package. Domestic wastewater is treated by a complete mixed activated sludge system with treatment units including, headworks (bar screen and grit chamber), equalization basin, aeration basins, secondary clarifiers, chlorine contact chambers, and Parshall Flume. Waste sludge is thickened and dewatered by a belt filter press before being removed with a sludge hauling truck.

PLANTILLA EN ESPAÑOL PARA SOLICITUDES NUEVAS/RENOVACIONES/ENMIENDAS DE TPDES o TLAP

AGUAS RESIDUALES DOMÉSTICAS /AGUAS PLUVIALES

El siguiente resumen se proporciona para esta solicitud de permiso de calidad del agua pendiente que está siendo revisada por la Comisión de Calidad Ambiental de Texas según lo requerido por el Capítulo 39 del Código Administrativo de Texas 30. La información proporcionada en este resumen puede cambiar durante la revisión técnica de la solicitud y no es una representación ejecutiva fedérale de la solicitud de permiso.

La cuidad de Lago Vista (CN600622849) opera Lago Vista Wastewater Treatment Plant (RN101609683), un sistema de lodo activado completamente mezclado con desinfección con cloro. La instalación está ubicada en 21011 Seminole Dr, en Lago Vista, Condado de Travis, Texas 78645. Esta solicitud es para una enmienda mayor al permiso TLAP (WQ001752001) para un sistema sistema existente de suministro público de aguas residuales. El permiso autoriza la descarga de aguas residuales domésticas a un flujo promedio anual de efluentes que no exceda 1.0 millones de galones por día (MGD) en la fase intermedia (actual) y 1.5 MGD en la fase final.. Este permiso no autorizará una descarga de contaminantes en el agua en el estado.

Se espera que las descargas de la instalación contengan demanda bioquímica de oxígeno carbonáceo de cinco días, sólidos suspendidos totales, nitrógeno amoniacal, fósforo total, peróxido de hidrógeno y Escherichia coli. Contaminantes adicionales potenciales se incluyen en Domestic Technical Report 1.0, Section 7. Pollutant Analysis of Treated Effluent en el paquete de solicitud de permiso. Las aguas residuales domésticas. están tratado por por un sistema de lodo activado completamente mezclado con unidades de tratamiento que incluyen: obras de entrada (criba y cámara de arena), estanque de igualación, estanques de aireación, clarificadores secundarios, cámaras de contacto con cloro y flume Parshall. Los lodos residuales se espesan y deshidratan mediante un filtro prensa de banda antes de ser retirados con un camión de transporte de lodos.

Attachment D

Public Involvement Plan Form

Texas Commission on Environmental Quality

Public Involvement Plan Form for Permit and Registration Applications

The Public Involvement Plan is intended to provide applicants and the agency with information about how public outreach will be accomplished for certain types of applications in certain geographical areas of the state. It is intended to apply to new activities; major changes at existing plants, facilities, and processes; and to activities which are likely to have significant interest from the public. This preliminary screening is designed to identify applications that will benefit from an initial assessment of the need for enhanced public outreach.

All applicable sections of this form should be completed and submitted with the permit or registration application. For instructions on how to complete this form, see TCEQ-20960-inst.

Section 1. Preliminary Screening

☐ New Permit or Registration Application

☒ New Activity – modification, registration, amendment, facility, etc. (see instructions)

If neither of the above boxes are checked, completion of the form is not required and does not need to be submitted.

Section 2. Secondary Screening

☒ Requires public notice,

☒ Considered to have significant public interest, **and**

☒ Located within any of the following geographical locations:

- Austin
- Dallas
- Fort Worth
- Houston
- San Antonio
- West Texas
- Texas Panhandle
- Along the Texas/Mexico Border
- Other geographical locations should be decided on a case-by-case basis

If all the above boxes are not checked, a Public Involvement Plan is not necessary. Stop after Section 2 and submit the form.

☐ Public Involvement Plan not applicable to this application. Provide **brief** explanation.

Section 3. Application Information

Type of Application (check all that apply):

Air ☐ Initial ☐ Federal ☒ Amendment ☐ Standard Permit ☐ Title V

Waste ☐ Municipal Solid Waste ☐ Industrial and Hazardous Waste ☐ Scrap Tire
☐ Radioactive Material Licensing ☐ Underground Injection Control

Water Quality

☐ Texas Pollutant Discharge Elimination System (TPDES)

☒ Texas Land Application Permit (TLAP)

☐ State Only Concentrated Animal Feeding Operation (CAFO)

☐ Water Treatment Plant Residuals Disposal Permit

☐ Class B Biosolids Land Application Permit

☐ Domestic Septage Land Application Registration

Water Rights New Permit

☐ New Appropriation of Water

☐ New or existing reservoir

Amendment to an Existing Water Right

☐ Add a New Appropriation of Water

☐ Add a New or Existing Reservoir

☐ Major Amendment that could affect other water rights or the environment

Section 4. Plain Language Summary

Provide a brief description of planned activities.

The City of Lago Vista Wastewater Treatment Plant (WWTP) currently operates at 1.0 MGD. An expansion to 1.5 MGD is planned to meet the demands of population growth and increased wastewater needs in the area. The facility utilizes a complete mixed activated sludge system, with treatment components that include headworks (bar screen and grit chamber), an aeration basin, a secondary clarifier, a chlorine contact chamber, and a Parshall flume. The sludge processing system consists of an aerated sludge holding tank and a belt filter press.

Section 5. Community and Demographic Information

Community information can be found using EPA's EJ Screen, U.S. Census Bureau information, or generally available demographic tools.

Information gathered in this section can assist with the determination of whether alternative language notice is necessary. Please provide the following information.

Lago Vista

(City)

Travis

(County)

8,896 (April 1, 2020)

(Census Tract)

Please indicate which of these three is the level used for gathering the following information.

☒ City ☐ County ☐ Census Tract

(a) Percent of people over 25 years of age who at least graduated from high school

92.9% (2021)

(b) Per capita income for population near the specified location

$92,109 (2021)

(c) Percent of minority population and percent of population by race within the specified location

White (90.5%), Black or African American (2.0%), Hispanic or Latino (19.9%), Two or more Races (6.8%), Asian, alone (0.2%), Native Hawaiian and Other Pacific Islander, alone (0.3%) White, alone, not Hispanic or Latino (77.7%)

(d) Percent of Linguistically Isolated Households by language within the specified location

Information not available.

(e) Languages commonly spoken in area by percentage

English (84.7%) , Spanish (13%), Other (2.3%)

(f) Community and/or Stakeholder Groups

City of Lago Vista

(g) Historic public interest or involvement

Information not available.

Section 6. Planned Public Outreach Activities

(a) Is this application subject to the public participation requirements of Title 30 Texas Administrative Code (30 TAC) Chapter 39?

☒ Yes ☐ No

(b) If yes, do you intend at this time to provide public outreach other than what is required by rule?

☐ Yes ☐ No

If Yes, please describe.

If you answered "yes" that this application is subject to 30 TAC Chapter 39, answering the remaining questions in Section 6 is not required.

(c) Will you provide notice of this application in alternative languages?

☒ Yes ☐ No

Please refer to Section 5. If more than 5% of the population potentially affected by your application is Limited English Proficient, then you are required to provide notice in the alternative language.

If yes, how will you provide notice in alternative languages?

☑ Publish in alternative language newspaper

☐ Posted on Commissioner's Integrated Database Website

☐ Mailed by TCEQ's Office of the Chief Clerk

☑ Other (specify) Lago Vista City Hall

(d) Is there an opportunity for some type of public meeting, including after notice?

☐ Yes ☐ No

(e) If a public meeting is held, will a translator be provided if requested?

☒ Yes ☐ No

(f) Hard copies of the application will be available at the following (check all that apply):

☑ TCEQ Regional Office ☐ TCEQ Central Office

☑ Public Place (specify) Lago Vista City Hall

Section 7. Voluntary Submittal

For applicants voluntarily providing this Public Involvement Plan, who are not subject to formal public participation requirements.

Will you provide notice of this application, including notice in alternative languages?

☐ Yes ☐ No

What types of notice will be provided?

☐ Publish in alternative language newspaper

☐ Posted on Commissioner's Integrated Database Website

☐ Mailed by TCEQ's Office of the Chief Clerk

☐ Other (specify)

Attachment E

USGS Map

U.S. DEPARTMENT OF THE INTERIOR
U.S. GEOLOGICAL SURVEY

The National Map OnDemand Topo

7.5-MINUTE TOPO QUADRANGLE
TEXAS - CUSTOM EXTENT
7.5-MINUTE TOPO

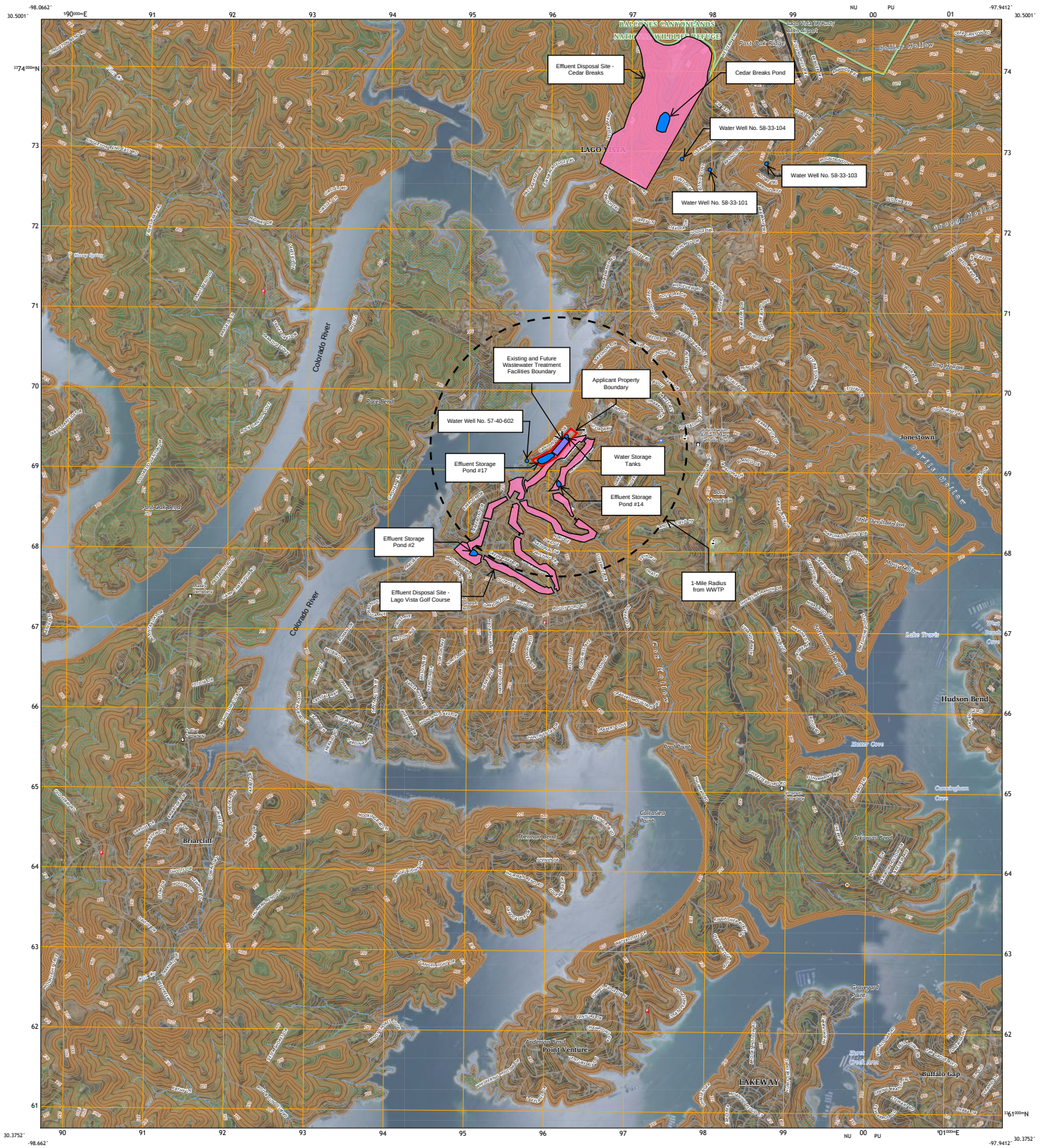

Produced by the United States Geological Survey
North American Datum of 1983 (NAD83)
World Geodetic System of 1984 (WGS84). Projection and
1 000-meter grid: UNIVERSAL TRANSVERSE MERCATOR, ZONE 14R

Data is provided by The National Map (TNM), is the best available at the time of map generation, and includes data content from supporting themes of Elevation, Hydrography, Geographic Names, Boundaries, Transportation, Structures, Land Cover, and Orthoimagery. Refer to associated Federal Geographic Data Committee (FGDC) Metadata for additional source data information.

This map is not a legal document. Boundaries may be generalized for this map scale. Private lands within government reservations may not be shown. Obtain permission before entering private lands. Temporal changes may have occurred since these data were collected and some data may no longer represent actual surface conditions.

Learn About The National Map: https://nationalmap.gov

UTM GRID AND 2025 MAGNETIC NORTH DECLINATION AT CENTER OF SHEET

SCALE 1:24 000

CONTOUR INTERVAL 5 FEET
NORTH AMERICAN VERTICAL DATUM OF 1988
CONTOUR SMOOTHNESS = Medium

QUADRANGLE LOCATION

ADJOINING QUADRANGLES

ROAD CLASSIFICATION
Expressway
Secondary Hwy
Ramp
Local Connector
Local Road
4WD
Interstate Route
US Route
State Route

7.5-MINUTE TOPO, TX
2025

Attachment F

Process Flow Diagrams

Existing Process Flow Diagram
1.0 MGD

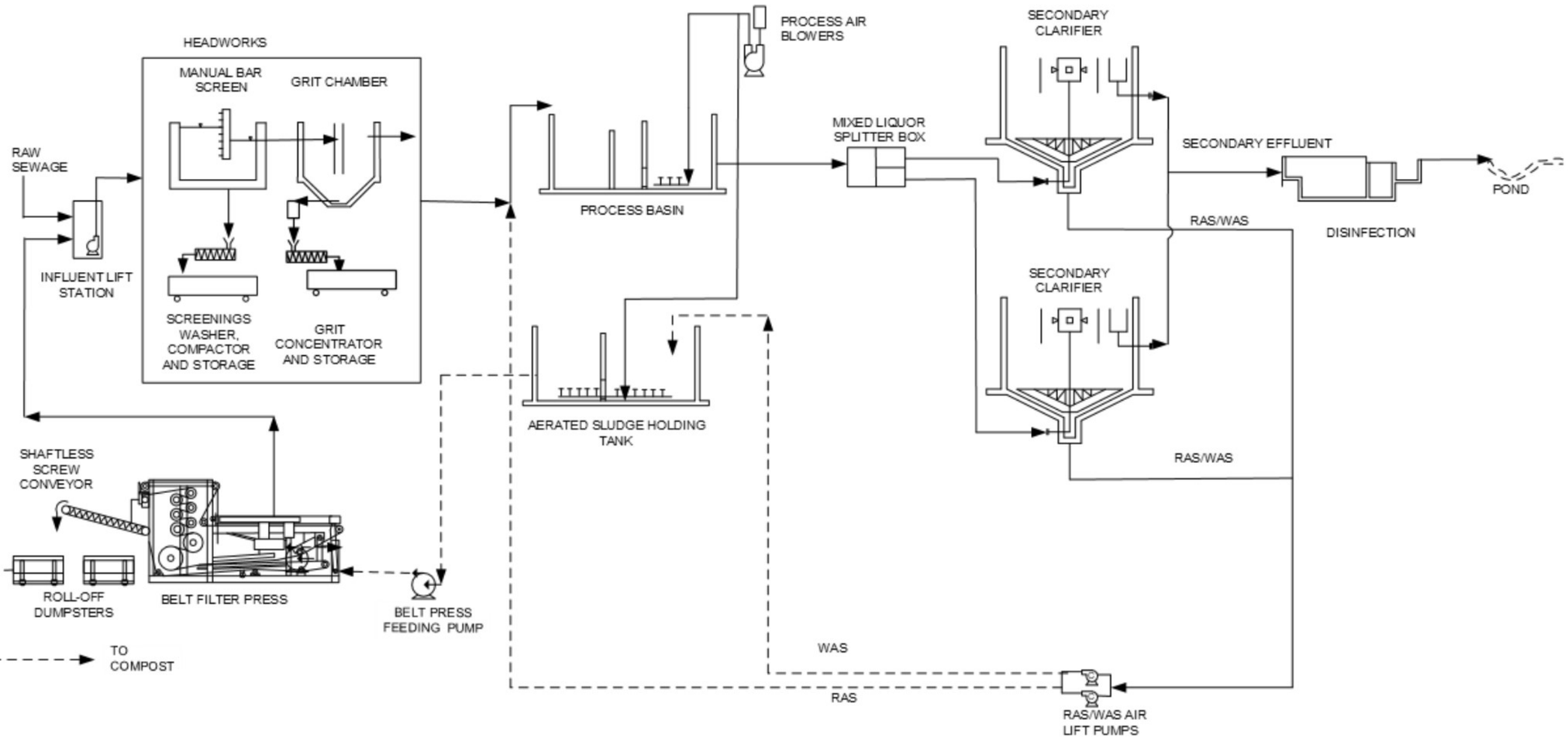

LEGEND

———	LIQUID
- - - - -	SLUDGE

ACRONYMS

RAS	RETURN ACTIVATED SLUDGE
WAS	WASTE ACTIVATED SLUDGE
TWAS	THICKENED WASTE ACTIVATED SLUDGE

Proposed Process Flow Diagram
1.5 MGD

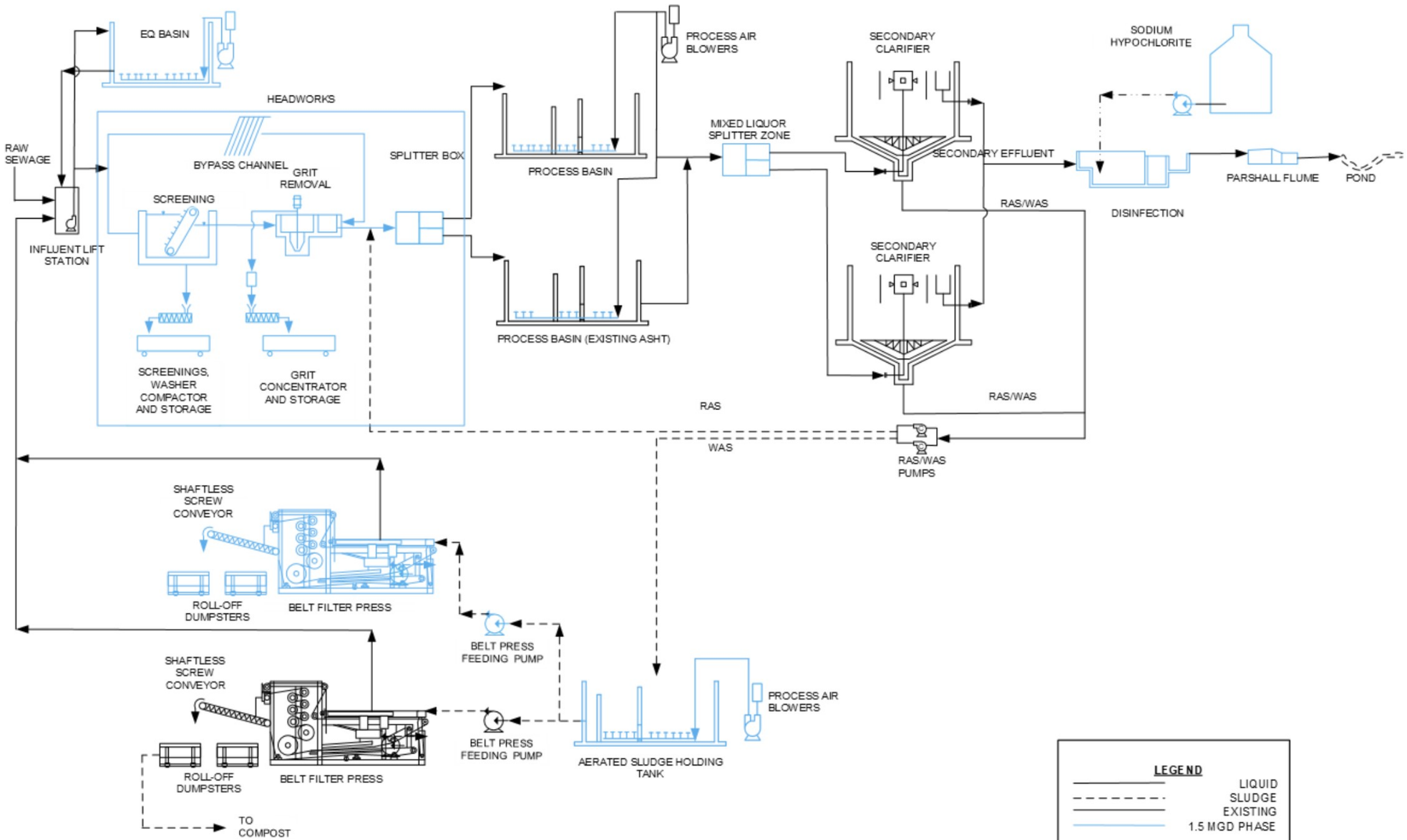

LEGEND

- LIQUID
- SLUDGE
- EXISTING
- 1.5 MGD PHASE

ACRONYMS

RAS	RETURN ACTIVATED SLUDGE
WAS	WASTE ACTIVATED SLUDGE
TWAS	THICKENED WASTE ACTIVATED SLUDGE

Attachment G

Site Drawings

EXISTING SITE LAYOUT

Existing Units

PROPOSED SITE LAYOUT

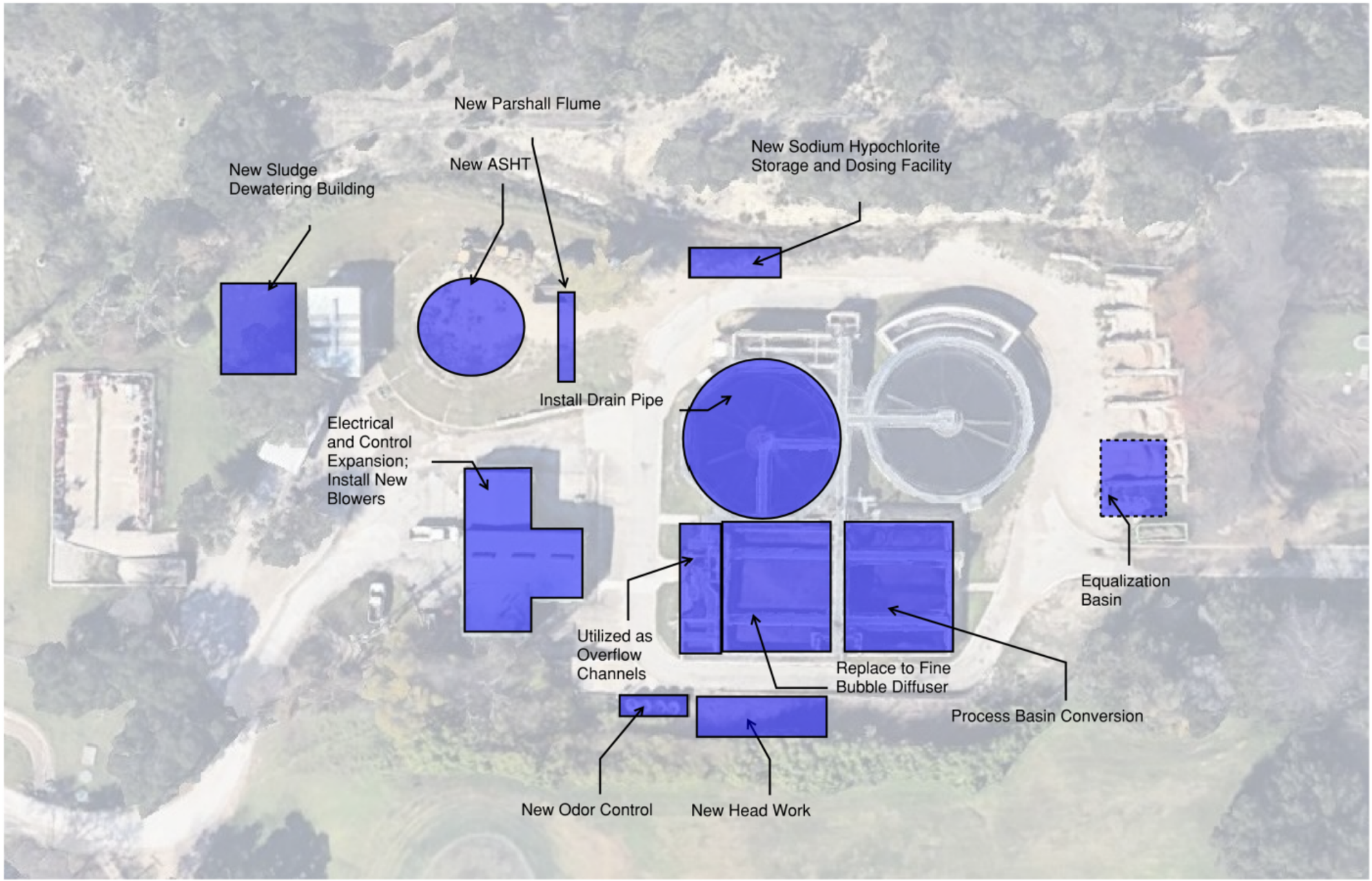

Attachment H

Annual Soil Analysis of Existing TLAP Area

2023 Lago Vista Golf Course Soil Analysis

email information for report date:
10/2/23 19:46

G013556

Lago Vista, City of

Attn: Chris Maxwell
chris.maxwell@lagovistatexas.gov

PO Box 4727
Lago Vista, TX 78645

August 2023 price increase.

Due to the increase in operational costs, Aqua-Tech Laboratories will be implementing a slight price increase. The new price list will be effective August 1, 2023.

Aqua-Tech values you as a customer and encourages you to reach out to our accounting staff at accounting@aqua-techlabs.com if you have questions.

Thank you for your business,
June M. Brien
Executive Technical Director

BRYAN FACILITY
635 Phil Gramm Boulevard
Bryan, TX 77807
Phone: (979) 778-3707
Fax: (979) 778-3193

AQUA-TECH LABORATORIES, INC.

AUSTIN FACILITY
3512 Montopolis Dr. Suite A
Austin, TX 78744
Phone: (512) 301-9559
Fax: (512) 301-9552

The analyses summarized in this report were performed by Aqua-Tech Laboratories, Inc. unless otherwise noted. Aqua-Tech Laboratories, Inc. holds accreditation from the State of Texas in accordance with TNI and/or through the TCEQ Drinking Water Commercial Laboratory Approval Program.

The following abbreviations indicate certification status:

NEL	TNI accredited parameter.
ANR	Accreditation not offered by the State of Texas.
DWP	Approval through the TCEQ Drinking Water Commercial Laboratory Approval Program.
INF	Aqua-Tech Laboratories, Inc. is not accredited for this parameter. It is reported on an informational basis only.

Subcontracted data summarized in this report is indicated by "Sub" in the Lab column.

Certificate: T104704371-22-26

TCEQ Lab ID T104704371

General Definitions:

NR	Not Reported.
RPD	Relative Percent Difference.
% R	Percent Recovery.
dry	Results with the "dry" unit designation are reported on a "dry weight" basis.
SQL	The Sample Quantitation Limit is the value below which the parameter cannot reliably be detected. The SQL includes all sample preparations, dilutions and / or concentrations.
Adj MDL	The Adjusted Method Detection Limit is the MDL value adjusted for any sample dilutions or concentrations .
MDL	The Method Detection Limit is the lowest theoretical value that is statistically different from zero for a specific method, taking into account all preparation steps and instrument settings.

All samples are reported on an "as received" basis unless the designation "dry" is added to the reported unit.

Copies of Aqua-Tech Laboratories, Inc. procedures and individual sampling plans are available upon request. Note that samples are collected by Aqua-Tech Laboratories, Inc. personnel unless otherwise noted in the "Sample Collected" field of this report as "Client" or "CLT".

Samples included in this report were received in acceptable condition according to Aqua-Tech Laboratories, Inc. procedures and 40 CFR, Chapter I, Subchapter D, Part 136.3, TABLE II. - *Required containers, preservation techniques, and holding times*, unless otherwise noted in this report.

Record Retention:

All reports, raw data, and associated quality control data are kept on file for 10 years before being destroyed. Any client that would like copies of records must contact Aqua-Tech Laboratories, Inc. no later than six months prior to the scheduled disposal. An administrative fee for retrieval and distribution will apply.

This report was approved by:

June M. Brien, Technical Director

The results in this report apply only to the samples analyzed. This analytical report must be reproduced in its entirety unless written permission is granted by Aqua-Tech Laboratories, Inc.

BRYAN FACILITY
635 Phil Gramm Boulevard
Bryan, TX 77807
Phone: (979) 778-3707
Fax: (979) 778-3193

AQUA-TECH LABORATORIES, INC.

AUSTIN FACILITY
3512 Montopolis Dr. Suite A
Austin, TX 78744
Phone: (512) 301-9559
Fax: (512) 301-9552

Analytical Report

Lago Vista, City of

Report Printed: **10/2/23** **19:46**

G013556

See attached subcontract report for additional analysis and fertilizer recommendations

Lago Vista Golf Course Soil 0-6 Inches

Collected: 08/14/23 14:00 by CLIENT
Received: 08/15/23 13:30 by Kaitlyn Johnson

Type: Comp | *Matrix*: Solid | *C-O-C #*: G013556

Lab ID# G013556-01

	Result	Units	Notes	MDL	Adj MDL	SQL	Lab	Analyzed	Method	Batch	
General Chemistry											
% Solids	**94.4**	g/100g (%)		0.10	0.10	0.10	*Austin*	08/16/23 14:07 SAR	SM2540 G 2015	M165310	NEL
Total Kjeldahl Nitrogen as N	**1360**	mg/kg dry		0.13	34.2	52.6	*Bryan*	08/22/23 13:11 KMA	SM4500-NH3 G 2011	M165363	ANR
Plant Available Parameters											
Total Nitrogen	**1370**	mg/kg dry wt.			N/A	N/A	*Calc*	10/02/23 19:31 PMY	Calculation	M167519	ANR

Please see the attached subcontract report for subcontracted data.

Lago Vista Golf Course Soil 6-18 Inches

Collected: 08/14/23 14:00 by CLIENT
Received: 08/15/23 13:30 by Kaitlyn Johnson

Type: Comp | *Matrix*: Solid | *C-O-C #*: G013556

Lab ID# G013556-02

	Result	Units	Notes	MDL	Adj MDL	SQL	Lab	Analyzed	Method	Batch	
General Chemistry											
% Solids	**94.7**	g/100g (%)		0.10	0.10	0.10	*Austin*	08/16/23 14:07 SAR	SM2540 G 2015	M165310	NEL
Total Kjeldahl Nitrogen as N	**1520**	mg/kg dry		0.13	34.0	52.3	*Bryan*	08/22/23 13:11 KMA	SM4500-NH3 G 2011	M165363	ANR
Plant Available Parameters											
Total Nitrogen	**1530**	mg/kg dry wt.			N/A	N/A	*Calc*	10/02/23 19:31 PMY	Calculation	M167519	ANR

Please see the attached subcontract report for subcontracted data.

Lago Vista Golf Course Soil 18-30 Inches

Collected: 08/14/23 14:00 by CLIENT
Received: 08/15/23 13:30 by Kaitlyn Johnson

Type: Comp | *Matrix*: Solid | *C-O-C #*: G013556

Lab ID# G013556-03

	Result	Units	Notes	MDL	Adj MDL	SQL	Lab	Analyzed	Method	Batch	
General Chemistry											
% Solids	**94.9**	g/100g (%)		0.10	0.10	0.10	*Austin*	08/16/23 14:07 SAR	SM2540 G 2015	M165310	NEL
Total Kjeldahl Nitrogen as N	**1540**	mg/kg dry		0.13	34.2	52.6	*Bryan*	08/22/23 13:11 KMA	SM4500-NH3 G 2011	M165363	ANR
Plant Available Parameters											
Total Nitrogen	**1550**	mg/kg dry wt.			N/A	N/A	*Calc*	10/02/23 19:31 PMY	Calculation	M167519	ANR

Please see the attached subcontract report for subcontracted data.

BRYAN FACILITY
635 Phil Gramm Boulevard
Bryan, TX 77807
Phone: (979) 778-3707
Fax: (979) 778-3193

AQUA-TECH LABORATORIES, INC.

AUSTIN FACILITY
3512 Montopolis Dr. Suite A
Austin, TX 78744
Phone: (512) 301-9559
Fax: (512) 301-9552

Analytical Report

Lago Vista, City of

Report Printed: **10/2/23** **19:46**

G013556

General Chemistry - Quality Control

	Result	Units	Notes	MDL	SQL	Analyzed	Spike Amount	Source Result	%R	%R Limits	RPD	RPD Limit	Batch	
% Solids - SM2540 G 2015														*Austin*
Blank	<0.10	g/100g (%)		0.10	0.10	08/16/23 14:07 SAR							M165310	
Duplicate	97.9	g/100g (%)		0.10	0.10	08/16/23 14:07 SAR		97.9			0.0102	10	M165310	
Duplicate	97.9	%		0.100	0.100	08/16/23 14:07 SAR		97.9			0.0102	5.81	M165310	
Total Kjeldahl Nitrogen as N - SM4500-NH3 G 2011														*Bryan*
Initial Cal Check	8.39	mg/L				08/22/23 13:11 KMA	9.12		92.0	90 - 110			2308273	
Low Cal Check	0.18	mg/L				08/22/23 13:11 KMA	0.200		91.5	70 - 130			2308273	
Blank	<0.20	mg/kg wet		0.13	0.20	08/22/23 13:11 KMA							M165363	
LCS	8.49	mg/kg wet		0.13	0.20	08/22/23 13:11 KMA	8.00		106	85 - 115			M165363	
LCS Dup	8.36	mg/kg wet		0.13	0.20	08/22/23 13:11 KMA	8.00		105	85 - 115	1.51	10	M165363	
Matrix Spike	21700	mg/kg dry		330	507	08/22/23 13:11 KMA	20300	934	102	70 - 130			M165363	
Matrix Spike Dup	21600	mg/kg dry		330	507	08/22/23 13:11 KMA	20300	934	102	70 - 130	0.379	20	M165363	

Sample Preparation Summary

Sample	Method	Prepared	Lab	Bottle	Initial	Units	Final	Units	External Dilution Factor	Batch
G013556-01										
% Solids	SM2540 G 2015	8/16/23 14:07 SAR	Austin	A	10.0	g	10.0	mL	1	M165310
Subcontract	Sub Contract Data Entry	10/2/23 12:19 PMY	Bryan	-	-	-	-	-	-	M167500
Total Kjeldahl Nitrogen as N	SM4500-NH3 G 2011	8/17/23 11:49 CTG	Bryan	A	0.101	g	25.0	mL	1	M165363
Total Nitrogen	Calculation	10/2/23 19:31 PMY			1.00	g	1.00	mL	1	M167519
G013556-02										
% Solids	SM2540 G 2015	8/16/23 14:07 SAR	Austin	A	10.0	g	10.0	mL	1	M165310
Subcontract	Sub Contract Data Entry	10/2/23 12:19 PMY	Bryan	-	-	-	-	-	-	M167500
Total Kjeldahl Nitrogen as N	SM4500-NH3 G 2011	8/17/23 11:49 CTG	Bryan	A	0.101	g	25.0	mL	1	M165363
Total Nitrogen	Calculation	10/2/23 19:31 PMY			1.00	g	1.00	mL	1	M167519
G013556-03										
% Solids	SM2540 G 2015	8/16/23 14:07 SAR	Austin	A	10.0	g	10.0	mL	1	M165310
Subcontract	Sub Contract Data Entry	10/2/23 12:19 PMY	Bryan	-	-	-	-	-	-	M167500
Total Kjeldahl Nitrogen as N	SM4500-NH3 G 2011	8/17/23 11:49 CTG	Bryan	A	0.100	g	25.0	mL	1	M165363
Total Nitrogen	Calculation	10/2/23 19:31 PMY			1.00	g	1.00	mL	1	M167519

Chain-of-Custody and Analysis Request

UA-TECH LABORATORIES, INC.

Client / Project Name: Lago Vista, City of — Lago Vista WWTP Soil REC

Contact Information
Name: Chris Maxwell
Address: PO Box 4727
City: Lago Vista
State: TX Zip: 78645
Phone: (512) 267-1155
email:

Definitions
DW Drinking Water
NP Non-Potable Water
S Solid
CM Custody Maintained
CTU Custody Transfer Unbroken
CT Corrected Temperature

Reagent tracking is available upon request.

TCEQ LAB ID: T104704371

Aqua-Tech laboratories, Inc.

Austin: 3512 Montopolis Dr., Austin, TX 78744, 512.301.9559
Bryan: 635 Phil Gramm Blvd., Bryan, TX 77807, 979.778.3707

Test results meet all accreditation/certification requirements unless stated otherwise.

C-O-C # G013556

Page 1 of 1

rte_ATL COC 012723.rpt

Analyses Requested: "A" prefix indicates Austin, all others Bryan or Subcontracted, indicated by [SUB].
Name format: Analysis-Matrix-Technology-Method.

[NEL] = NELAP accredited parameter
[SUB] = NELAP accredited subcontracted parameter
[CNR] = No NELAP accreditation required or available
[INF] = Informational only (not NELAC certified)

By relinquishing the samples listed below to Aqua-Tech laboratories, Inc. (ATL), the client agrees to the following terms. Samples will be analyzed by a method that is within ATL's NELAP fields of accreditation (FoA). Analytes requiring an accredited method that is not within ATL's FoA will be subcontracted to a NELAP lab that is accredited for that method. Clients will be notified of the subcontract lab's details. Other analytes not requiring accreditation will be analyzed by a compendial method. If a specific method is required, the client will note the method in the "Analysis Requested" column. The client approves all method modifications documented by ATL or the subcontract lab.
A current list of ATL's NELAC fields of accreditation and other methods are available on request.

Sample Custody

Relinquished (print & sign)	Jose D. Munoz	☑ Sampler ☐ Client ☐ ATL Field	Date 8/15/2023 Time 1:30 p.m. ☑ Iced / Refrig ☐ Custody Sealed
Received (print & sign)		☐ Client ☐ ATL Field	Date Time ☐ Iced / Refrig ☐ CM / CTU
Relinquished (print & sign)		☐ Client ☐ ATL Field	Date Time ☐ Iced / Refrig ☐ CM / CTU
Received (print & sign)		☐ Client ☐ ATL Field	Date Time ☐ Iced / Refrig ☐ CM / CTU
Relinquished (print & sign)		☐ Client ☐ ATL Field	Date Time ☐ Iced / Refrig ☐ CM / CTU / Sealed
Received (print & sign)	Kaitlyn Johnson	☑ Lab	Date 8/15/23 Time 1330 ☑ Cond Good ☑ Iced / Refrig ☐ CM / CTU

Comments:

- LAB RECEIPT - CT

Temperature - CT (C): 4.0 | 4.1 CT
Preservation Correct: Y
Post-Preservatives: N
Thermometer ID: 07e4480
pH Paper ID: pHA

Field Sample ID	Start Date	Start Time	End Date	End Time	Composite Type	Sample Matrix	Container (Checked box indicates bottle arrived in lab) (Volume - Type - Preservative)	Lab ID
Lago Vista Golf Course Soil 0-6 Inches	8/14/2023	12:00 p.m.	8/14/2023	14:00 p.m.	Comp	S	☑ A SOIL 0.5LP ☑ B SOIL TKN 0.25LP ☑ C SOIL TS 0.1L	G013556-01
A TS SL Grav SM2540 G [NEL]; K TAMU Plant Available Mehlich 3 CNR [SUB]; N Total TAMU CALC ENTRY [CNR]; NO3N TAMU Extractable Mehlich 3 CNR [SUB]; SUB pH SL TAMU (1:2) CNR [SUB]; Ca TAMU Plant Available Mehlich 3 CNR [SUB] [ANR]; Mg TAMU Plant Available Mehlich 3 CNR [SUB] [ANR]; Na TAMU Plant Available Mehlich 3 CNR [SUB] [ANR]; P TAMU Plant Available Mehlich 3 CNR [SUB]; TKN SL AUTO SM4500 NH3 G [CNR]; Cond SL (1:2) Probe TAMU CNR [SUB]; N Total SL PKG TAMU [CNR]; NH4 TAMU KCL extract CNR [SUB]; Solids, Dry Weight; Y Billing N Total Calc								
Lago Vista Golf Course Soil 6-18 Inches	8/14/2023	12:00 p.m.	8/14/2023	14:00 p.m.	Comp	S	☑ A SOIL 0.5LP ☑ B SOIL TKN 0.25LP ☑ C SOIL TS 0.1L	G013556-02
A TS SL Grav SM2540 G [NEL]; K TAMU Plant Available Mehlich 3 CNR [SUB]; N Total TAMU CALC ENTRY [CNR]; NO3N TAMU Extractable Mehlich 3 CNR [SUB]; SUB pH SL TAMU (1:2) CNR [SUB]; Ca TAMU Plant Available Mehlich 3 CNR [SUB] [ANR]; Mg TAMU Plant Available Mehlich 3 CNR [SUB] [ANR]; Na TAMU Plant Available Mehlich 3 CNR [SUB] [ANR]; P TAMU Plant Available Mehlich 3 CNR [SUB]; TKN SL AUTO SM4500 NH3 G [CNR]; Cond SL (1:2) Probe TAMU CNR [SUB]; N Total SL PKG TAMU [CNR]; NH4 TAMU KCL extract CNR [SUB]; Solids, Dry Weight; Y Billing N Total Calc								
Lago Vista Golf Course Soil 18-30 Inches	8/14/2023	12:00 p.m.	8/14/2023	14:00 p.m.	Comp	S	☑ A SOIL 0.5LP ☑ B SOIL TKN 0.25LP ☑ C SOIL TS 0.1L	G013556-03
A TS SL Grav SM2540 G [NEL]; K TAMU Plant Available Mehlich 3 CNR [SUB]; N Total TAMU CALC ENTRY [CNR]; NO3N TAMU Extractable Mehlich 3 CNR [SUB]; SUB pH SL TAMU (1:2) CNR [SUB]; Ca TAMU Plant Available Mehlich 3 CNR [SUB] [ANR]; Mg TAMU Plant Available Mehlich 3 CNR [SUB] [ANR]; Na TAMU Plant Available Mehlich 3 CNR [SUB] [ANR]; P TAMU Plant Available Mehlich 3 CNR [SUB]; TKN SL AUTO SM4500 NH3 G [CNR]; Cond SL (1:2) Probe TAMU CNR [SUB]; N Total SL PKG TAMU [CNR]; NH4 TAMU KCL extract CNR [SUB]; Solids, Dry Weight; Y Billing N Total Calc								

Page 4 of 9 G013556_1 ATL 051823 FIN_ls 10 02 23 1946

TEXAS A&M AGRILIFE EXTENSION

Soil Analysis Report

Soil, Water and Forage Testing Laboratory
Department of Soil and Crop Sciences
2478 TAMU
College Station, TX 77843-2478
979-845-4816 (phone)
979-845-5958 (FAX)
Visit our website: http://soiltesting.tamu.edu

Report generated for:
Aqua-Tech Laboratories, Inc.
635 Phil Gramm Blvd
BRYAN, TX 77807

Sample received on: 8/16/2023
Printed on: 8/23/2023
Area Represented: 156.35 acres
SWFTL recommends <40 acres/sample

Brazos County
Laboratory Number: 638133
Customer Sample ID: G013556-01
Crop Grown: IMPROVED AND HYBRID BERMUDA GRASS (3 HAY CUTTINGS-2 TONS/A AVG.)

Analysis	Results	CL*	Units	ExLow	VLow	Low	Mod	High	VHigh	Excess.	Fertilizer Recommended
pH	7.5	(5.8)	-	Slightly Alkaline							
Conductivity	354	(-)	umho/cm	None			CL*				
Nitrate-N	9	(-)	ppm**								80 lbs N/acre
Phosphorus	83	(50)	ppm								0 lbs P2O5/acre
Potassium	490	(150)	ppm								0 lbs K20/acre
Calcium	6,680	(180)	ppm								0 lbs Ca/acre
Magnesium	478	(50)	ppm								0 lbs Mg/acre
Sulfur	83	(13)	ppm								0 lbs S/acre
Sodium	223	(-)	ppm								
Iron											
Zinc											
Manganese											
Copper											
Boron											
Limestone Requirement											0.00 tons 100ECCE/acre
Dry Matter	82.3		%								
Ammonium-N	31.9		ppm								

*CL=Critical level is the point which no additional nutrient (excluding nitrate-N, sodium and conductivity) is recommended. **ppm=mg/kg

Nitrogen: Apply an additional 100 lbs/A of nitrogen for each subsequent hay cuttings.

New online fertilizer calculators have been placed on the laboratory's website to determine appropriate fertilizers to purchase and determine their application rates.
http://soiltesting.tamu.edu/webpages/calculator.html

Methods: pH and conductivity/ 2:1; nitrate-N/Cd-red.; P, K, Ca, Mg, Na, and S/Mehlich 3 by ICP; Fe, Zn, Mn, and Cu/DTPA by ICP; and B/hot water by ICP.

ProAnalysisVer. 2.19j

TEXAS A&M AGRILIFE EXTENSION

Soil Analysis Report

Soil, Water and Forage Testing Laboratory
Department of Soil and Crop Sciences
2478 TAMU
College Station, TX 77843-2478
979-845-4816 (phone)
979-845-5958 (FAX)
Visit our website: http://soiltesting.tamu.edu

Report generated for:
Aqua-Tech Laboratories, Inc.
635 Phil Gramm Blvd
BRYAN, TX 77807

Sample received on: 8/16/2023
Printed on: 8/23/2023
Area Represented: 156.35 acres
SWFTL recommends <40 acres/sample

Brazos County
Laboratory Number: 638134
Customer Sample ID: G013556-02
Crop Grown: IMPROVED AND HYBRID BERMUDA GRASS (3 HAY CUTTINGS-2 TONS/A AVG.)

Analysis	Results	CL*	Units	ExLow VLow Low Mod High VHigh Excess.	Fertilizer Recommended
pH	7.7	(5.8)	-	Mod. Alkaline	
Conductivity	333	(-)	umho/cm	None	
Nitrate-N	7	(-)	ppm**		85 lbs N/acre
Phosphorus	79	(50)	ppm		0 lbs P2O5/acre
Potassium	458	(150)	ppm		0 lbs K20/acre
Calcium	7,029	(180)	ppm		0 lbs Ca/acre
Magnesium	449	(50)	ppm		0 lbs Mg/acre
Sulfur	79	(13)	ppm		0 lbs S/acre
Sodium	222	(-)	ppm		
Iron					
Zinc					
Manganese					
Copper					
Boron					
Limestone Requirement					0.00 tons 100ECCE/acre
Dry Matter	82.7		%		
Ammonium-N	23.1		ppm		

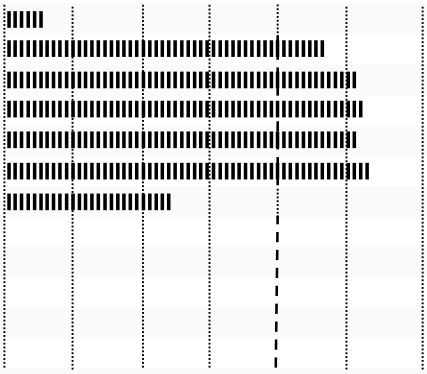

*CL=Critical level is the point which no additional nutrient (excluding nitrate-N, sodium and conductivity) is recommended. **ppm=mg/kg

Nitrogen: Apply an additional 100 lbs/A of nitrogen for each subsequent hay cuttings.

New online fertilizer calculators have been placed on the laboratory's website to determine appropriate fertilizers to purchase and determine their application rates.
http://soiltesting.tamu.edu/webpages/calculator.html

Methods: pH and conductivity/ 2:1; nitrate-N/Cd-red.; P, K, Ca, Mg, Na, and S/Mehlich 3 by ICP; Fe, Zn, Mn, and Cu/DTPA by ICP; and B/hot water by ICP.

ProAnalysisVer. 2.19j

TEXAS A&M AGRILIFE EXTENSION

Soil Analysis Report

Soil, Water and Forage Testing Laboratory
Department of Soil and Crop Sciences
2478 TAMU
College Station, TX 77843-2478
979-845-4816 (phone)
979-845-5958 (FAX)
Visit our website: http://soiltesting.tamu.edu

Report generated for:
Aqua-Tech Laboratories, Inc.
635 Phil Gramm Blvd
BRYAN, TX 77807

Sample received on: 8/16/2023
Printed on: 8/23/2023
Area Represented: 156.35 acres
SWFTL recommends <40 acres/sample

Brazos County
Laboratory Number: 638135
Customer Sample ID: G013556-03
Crop Grown: IMPROVED AND HYBRID BERMUDA GRASS (3 HAY CUTTINGS-2 TONS/A AVG.)

Analysis	Results	CL*	Units	ExLow VLow Low Mod High VHigh Excess.	Fertilizer Recommended
pH	7.7	(5.8)	-	Mod. Alkaline	
Conductivity	447	(-)	umho/cm	None	
Nitrate-N	8	(-)	ppm**		80 lbs N/acre
Phosphorus	79	(50)	ppm		0 lbs P2O5/acre
Potassium	483	(150)	ppm		0 lbs K20/acre
Calcium	7,386	(180)	ppm		0 lbs Ca/acre
Magnesium	466	(50)	ppm		0 lbs Mg/acre
Sulfur	79	(13)	ppm		0 lbs S/acre
Sodium	234	(-)	ppm		
Iron					
Zinc					
Manganese					
Copper					
Boron					
Limestone Requirement					0.00 tons 100ECCE/acre
Dry Matter	82.7		%		
Ammonium-N	17.6		ppm		

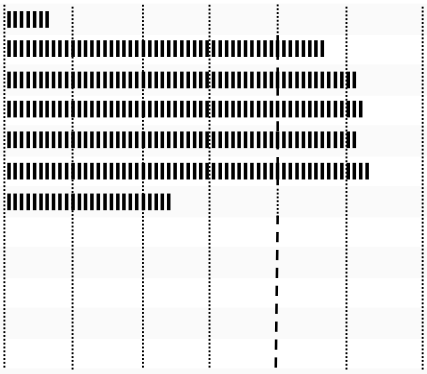

*CL=Critical level is the point which no additional nutrient (excluding nitrate-N, sodium and conductivity) is recommended. **ppm=mg/kg

Nitrogen: Apply an additional 100 lbs/A of nitrogen for each subsequent hay cuttings.

New online fertilizer calculators have been placed on the laboratory's website to determine appropriate fertilizers to purchase and determine their application rates.
http://soiltesting.tamu.edu/webpages/calculator.html

Methods: pH and conductivity/ 2:1; nitrate-N/Cd-red.; P, K, Ca, Mg, Na, and S/Mehlich 3 by ICP; Fe, Zn, Mn, and Cu/DTPA by ICP; and B/hot water by ICP.

ProAnalysisVer. 2.19j

AQUA-TECH LABORATORIES

Chain-of-Custody and Analysis Request

All analyses must be performed by a TNI approved method certified by the TCEQ. Contact ATL's sample custodian via voice and email if your methods do not meet this criteria.

Aqua-Tech laboratories, Inc.

Austin
3512 Montopolis Dr. Suite A
Austin, TX 78744
512.301.9559

Bryan
635 Phil Gramm Blvd.
Bryan, TX 77807
979.778.3707

T104704371
TX239

Test results meet all accreditation/certification requirements unless stated otherwise.

C-O-C # **261 - G013556**

Page 1 of 2

sco_ATL TAMU 011921

SHIPPED TO
TAMU - Soil Lab
2610 F&B Road
College Station, TX 77845
Phone: (979) 845-4816

DEFINITIONS

P	Plastic
G	Glass
L	Liter
CM	Custody Maintained
CTU	Custody Transfer Unbroken
ATL	Aqua-Tech Laboratories, Inc

Comments:

Please use Sample ID as PO# and email reports to reporting@aqua-techlabs.com.

Lines below document condition at receipt in lab (shipped to) listed above.

Cooler ID	Temp Read (C)	Corrected Temp (C)	Thermometer ID

Please hold coolers for pick-up.

Sample Custody

Relinquished (print & sign)	James F. Z	☐ Sampler ☐ Client ☒ ATL Field	Date 08-16-23 ☒ Iced / Refrig Time 1016 ☐ Custody Sealed
Received (print & sign)		☐ Client ☐ ATL Field	Date ☐ Iced / Refrig Time ☐ CM / CTU
Relinquished (print & sign)		☐ Client ☐ ATL Field	Date ☐ Iced / Refrig Time ☐ CM / CTU
Received (print & sign)		☐ Client ☐ ATL Field	Date ☐ Iced / Refrig Time ☐ CM / CTU
Relinquished (print & sign)	James F. Z	☐ Client ☒ ATL Field	Date 8-16-23 ☒ Iced / Refrig Time 1055 ☒ CM / CTU / Sealed
Received (print & sign)		☒ Lab	Date 8/16/23 ☑ Cond Good Time 10:56 ☑ Iced / Refrig ☐ CM / CTU

Sample ID Sampled / Matrix	Analysis Request	(ATL indicates cooler number in parentheses for each container - only required if more than one cooler listed above.)	Lab ID
G013556-01 08/14/23 14:00 Soil	***% calculation*** Solids, Percent ***Mehlich 3 - TAMU*** P Plant Available; NO3N Extractable; Na Plant Available Mg Plant Available; K Plant Available; Ca Plant Available ***TAMU - 1:2 Soil Extract*** pH; Conductivity (1:2) ***TAMU - KCl Extract*** NH4 - Ammonium		

AQUA-TECH LABORATORIES, INC.

Chain-of-Custody and Analysis Request

C-O-C # **261 - G013556**

SHIPPED TO: **TAMU - Soil Lab**

Sample ID Sampled / Matrix	Analysis Request	(ATL indicates cooler number in parentheses for each container - only required if more than one cooler listed above.)	Lab ID
G013556-02 08/14/23 14:00 Soil	***% calculation*** Solids, Percent ***Mehlich 3 - TAMU*** P Plant Available / NO3N Extractable / Na Plant Available Mg Plant Available / K Plant Available / Ca Plant Available ***TAMU - 1:2 Soil Extract*** pH / Conductivity (1:2) ***TAMU - KCl Extract*** NH4 - Ammonium		
G013556-03 08/14/23 14:00 Soil	***% calculation*** Solids, Percent ***Mehlich 3 - TAMU*** P Plant Available / NO3N Extractable / Na Plant Available Mg Plant Available / K Plant Available / Ca Plant Available ***TAMU - 1:2 Soil Extract*** pH / Conductivity (1:2) ***TAMU - KCl Extract*** NH4 - Ammonium		

2024 Lago Vista Golf Course Soil Analysis

email information for report date:
10/2/24 17:41

H010265

Lago Vista, City of

Attn: Chris Maxwell
chris.maxwell@lagovistatexas.gov

PO Box 4727
Lago Vista, TX 78645

Please contact us for your sampling needs or if you have any questions. Some convenient contacts are listed below. You can also access your results and reports through our ClientConnect ™ portal on our website (www.aqua-techlabs.com).

For sampling questions:

samplingbryan@aqua-techlabs.com (Bryan area)
samplingaustin@aqua-techlabs.com (Austin area)

reporting@aqua-techlabs.com (report questions)

Aqua-Tech values you as a customer and encourages you to speak with our staff at 979-778-3707 or the above emails if you have questions.

Thank you for your business,
June M. Brien
Executive Technical Director

BRYAN FACILITY
635 Phil Gramm Boulevard
Bryan, TX 77807
Phone: (979) 778-3707
Fax: (979) 778-3193

AQUA-TECH LABORATORIES

AUSTIN FACILITY
3512 Montopolis Dr. Suite A
Austin, TX 78744
Phone: (512) 301-9559
Fax: (512) 301-9552

The analyses summarized in this report were performed by Aqua-Tech Laboratories, Inc. unless otherwise noted. Aqua-Tech Laboratories, Inc. holds accreditation from the State of Texas in accordance with TNI and/or through the TCEQ Drinking Water Commercial Laboratory Approval Program.

The following abbreviations indicate certification status:

NEL	TNI accredited parameter.
ANR	Accreditation not offered by the State of Texas.
DWP	Approval through the TCEQ Drinking Water Commercial Laboratory Approval Program.
INF	Aqua-Tech Laboratories, Inc. is not accredited for this parameter. It is reported on an informational basis only.

Subcontracted data summarized in this report is indicated by "Sub" in the Lab column.

Certificate: TX-C24-00311

TCEQ Lab ID T104704371

General Definitions:

NR	Not Reported.
RPD	Relative Percent Difference.
% R	Percent Recovery.
dry	Results with the "dry" unit designation are reported on a "dry weight" basis.
SQL	The Sample Quantitation Limit is the value below which the parameter cannot reliably be detected. The SQL includes all sample preparations, dilutions and / or concentrations.
Adj MDL	The Adjusted Method Detection Limit is the MDL value adjusted for any sample dilutions or concentrations .
MDL	The Method Detection Limit is the lowest theoretical value that is statistically different from zero for a specific method, taking into account all preparation steps and instrument settings.

All samples are reported on an "as received" basis unless the designation "dry" is added to the reported unit.

Copies of Aqua-Tech Laboratories, Inc. procedures and individual sampling plans are available upon request. Note that samples are collected by Aqua-Tech Laboratories, Inc. personnel unless otherwise noted in the "Sample Collected" field of this report as "Client" or "CLT".

Samples included in this report were received in acceptable condition according to Aqua-Tech Laboratories, Inc. procedures and 40 CFR, Chapter I, Subchapter D, Part 136.3, TABLE II. - *Required containers, preservation techniques, and holding times*, unless otherwise noted in this report.

Record Retention:

All reports, raw data, and associated quality control data are kept on file for 10 years before being destroyed. Any client that would like copies of records must contact Aqua-Tech Laboratories, Inc. no later than six months prior to the scheduled disposal. An administrative fee for retrieval and distribution will apply.

This report was approved by:

June M. Brien, Technical Director

The results in this report apply only to the samples analyzed. This analytical report must be reproduced in its entirety unless written permission is granted by Aqua-Tech Laboratories, Inc.

BRYAN FACILITY
635 Phil Gramm Boulevard
Bryan, TX 77807
Phone: (979) 778-3707
Fax: (979) 778-3193

AQUA-TECH LABORATORIES

AUSTIN FACILITY
3512 Montopolis Dr. Suite A
Austin, TX 78744
Phone: (512) 301-9559
Fax: (512) 301-9552

Analytical Report

Lago Vista, City of

Report Printed: **10/2/24** **17:41**

H010265

Lago Vista Golf Course Soil 0-6 Inches

Collected: 08/26/24 10:00 by CLIENT
Received: 08/28/24 15:55 by Brendan Bourland

Type: Comp | *Matrix*: Solid | *C-O-C #*: H010265

Lab ID# H010265-01

	Result	Units	Notes	MDL	Adj MDL	SQL	Lab	Analyzed	Method	Batch	
General Chemistry											
% Solids	**92.7**	g/100g (%)		0.10	0.10	0.10	*Austin*	08/29/24 17:05 KHA	SM2540 G 2015	M182072	NEL
Total Kjeldahl Nitrogen as N	**1570**	mg/kg dry		0.13	34.9	53.7	*Bryan*	09/03/24 13:32 KMA	SM4500-NH3 G 2011	M182217	ANR
Plant Available Parameters											
Total Nitrogen	**1580**	mg/kg dry wt.			N/A	N/A	*Calc*	09/30/24 18:57 PMY	Calculation	M183483	ANR

Please see the attached subcontract report for subcontracted data.

Lago Vista Golf Course Soil 6-18 Inches

Collected: 08/26/24 10:00 by CLIENT
Received: 08/28/24 15:55 by Brendan Bourland

Type: Comp | *Matrix*: Solid | *C-O-C #*: H010265

Lab ID# H010265-02

	Result	Units	Notes	MDL	Adj MDL	SQL	Lab	Analyzed	Method	Batch	
General Chemistry											
% Solids	**86.6**	g/100g (%)		0.10	0.10	0.10	*Austin*	08/29/24 17:05 KHA	SM2540 G 2015	M182072	NEL
Total Kjeldahl Nitrogen as N	**1070**	mg/kg dry		0.13	74.5	115	*Bryan*	09/03/24 13:32 KMA	SM4500-NH3 G 2011	M182217	ANR
Plant Available Parameters											
Total Nitrogen	**1140**	mg/kg dry wt.			N/A	N/A	*Calc*	09/30/24 18:57 PMY	Calculation	M183483	ANR

Please see the attached subcontract report for subcontracted data.

Lago Vista Golf Course Soil 18-30 Inches

Collected: 08/26/24 10:00 by CLIENT
Received: 08/28/24 15:55 by Brendan Bourland

Type: Comp | *Matrix*: Solid | *C-O-C #*: H010265

Lab ID# H010265-03

	Result	Units	Notes	MDL	Adj MDL	SQL	Lab	Analyzed	Method	Batch	
General Chemistry											
% Solids	**86.7**	g/100g (%)		0.10	0.10	0.10	*Austin*	08/29/24 17:05 KHA	SM2540 G 2015	M182072	NEL
Total Kjeldahl Nitrogen as N	**859**	mg/kg dry		0.13	37.1	57.1	*Bryan*	09/03/24 13:32 KMA	SM4500-NH3 G 2011	M182217	ANR
Plant Available Parameters											
Total Nitrogen	**897**	mg/kg dry wt.			N/A	N/A	*Calc*	09/30/24 18:57 PMY	Calculation	M183483	ANR

Please see the attached subcontract report for subcontracted data.

BRYAN FACILITY
635 Phil Gramm Boulevard
Bryan, TX 77807
Phone: (979) 778-3707
Fax: (979) 778-3193

AQUA-TECH LABORATORIES

AUSTIN FACILITY
3512 Montopolis Dr. Suite A
Austin, TX 78744
Phone: (512) 301-9559
Fax: (512) 301-9552

Analytical Report

Lago Vista, City of

Report Printed: **10/2/24** **17:41**

H010265

General Chemistry - Quality Control

	Result	Units	Notes	MDL	SQL	Analyzed	Spike Amount	Source Result	%R	%R Limits	RPD	RPD Limit	Batch	
% Solids - SM2540 G 2015														*Austin*
Blank	<0.10	g/100g (%)		0.10	0.10	08/29/24 17:05 KHA							M182072	
Duplicate	94.2	g/100g (%)		0.10	0.10	08/29/24 17:05 KHA		94.4			0.148	10	M182072	
Duplicate	94.2	%		0.100	0.100	08/29/24 17:05 KHA		94.4			0.148	10	M182072	
Total Kjeldahl Nitrogen as N - SM4500-NH3 G 2011														*Bryan*
Initial Cal Check	3.45	mg/L				09/03/24 13:32 KMA	3.38		102	90 - 110			2409018	
Low Cal Check	0.21	mg/L				09/03/24 13:32 KMA	0.200		104	70 - 130			2409018	
Blank	<0.20	mg/kg wet		0.13	0.20	09/03/24 13:32 KMA							M182217	
LCS	4.07	mg/kg wet		0.13	0.20	09/03/24 13:32 KMA	4.00		102	91 - 116			M182217	
LCS Dup	4.13	mg/kg wet		0.13	0.20	09/03/24 13:32 KMA	4.00		103	91 - 116	1.46	10	M182217	
Matrix Spike	3200	mg/kg dry		74.5	115	09/03/24 13:32 KMA	2290	1070	92.8	88.2 - 119			M182217	
Matrix Spike Dup	3210	mg/kg dry		74.5	115	09/03/24 13:32 KMA	2290	1070	93.2	88.2 - 119	0.457	20	M182217	

Sample Preparation Summary

Sample	Method	Prepared	Lab	Bottle	Initial	Units	Final	Units	External Dilution Factor	Batch
H010265-01										
% Solids	SM2540 G 2015	8/29/24 17:05 KHA	Austin	C	10.0	g	10.0	mL	1	M182072
Subcontract	Sub Contract Data Entry	9/25/24 18:01 PMY	Bryan	-	-	-	-	-	-	M183270
Total Kjeldahl Nitrogen as N	SM4500-NH3 G 2011	9/3/24 8:00 CTG	Bryan	B	0.100	g	25.0	mL	1	M182217
Total Nitrogen	Calculation	9/30/24 18:57 PMY			1.00	g	1.00	mL	1	M183483
H010265-02										
% Solids	SM2540 G 2015	8/29/24 17:05 KHA	Austin	C	10.0	g	10.0	mL	1	M182072
Subcontract	Sub Contract Data Entry	9/25/24 18:01 PMY	Bryan	-	-	-	-	-	-	M183270
Total Kjeldahl Nitrogen as N	SM4500-NH3 G 2011	9/3/24 8:00 CTG	Bryan	B	0.0504	g	25.0	mL	1	M182217
Total Nitrogen	Calculation	9/30/24 18:57 PMY			1.00	g	1.00	mL	1	M183483
H010265-03										
% Solids	SM2540 G 2015	8/29/24 17:05 KHA	Austin	C	10.0	g	10.0	mL	1	M182072
Subcontract	Sub Contract Data Entry	9/25/24 18:01 PMY	Bryan	-	-	-	-	-	-	M183270
Total Kjeldahl Nitrogen as N	SM4500-NH3 G 2011	9/3/24 8:00 CTG	Bryan	B	0.101	g	25.0	mL	1	M182217
Total Nitrogen	Calculation	9/30/24 18:57 PMY			1.00	g	1.00	mL	1	M183483

AQUA-TECH LABORATORIES, INC.

Chain-of-Custody and Analysis Request

Client / Project Name: Lago Vista, City of
Lago Vista WWTP Soil REC

Contact Information
Name: Chris Maxwell
Address: PO Box 4727
City: Lago Vista
State: TX Zip: 78645
Phone: (512) 267-1155
email:

Definitions
DW Drinking Water
NP Non-Potable Water
S Solid
CM Custody Maintained
CTU Custody Transfer Unbroken
CT Corrected Temperature

Reagent tracking is available upon request.

TCEQ LAB ID: T104704371

Aqua-Tech laboratories, Inc.
Austin: 3512 Montopolis Dr., Austin, TX 78744, 512.301.9559
Bryan: 635 Phil Gramm Blvd., Bryan, TX 77807, 979.778.3707
Test results meet all accreditation/certification requirements unless stated otherwise.

C-O-C # **H010265**
Page 1 of 1
rte_ATL COC 012723.rpt

Analyses Requested: "A" prefix indicates Austin, all others Bryan or Subcontracted, indicated by [SUB].
Name format: Analysis-Matrix-Technology-Method.

[NEL] = NELAP accredited parameter
[SUB] = NELAP accredited subcontracted parameter
[CNR] = No NELAP accreditation required or available
[INF] = Informational only (not NELAC certified)

By relinquishing the samples listed below to Aqua-Tech laboratories, Inc. (ATL), the client agrees to the following terms. Samples will be analyzed by a method that is within ATL's NELAP fields of accreditation (FoA). Analytes requiring an accredited method that is not within ATL's FoA will be subcontracted to a NELAP lab that is accredited for that method. Clients will be notified of the subcontract lab's details. Other analytes not requiring accreditation will be analyzed by a compendial method. If a specific method is required, the client will note the method in the "Analysis Requested" column. The client approves all method modifications documented by ATL or the subcontract lab.
A current list of ATL's NELAC fields of accreditation and other methods are available on request.

Comments:

- LAB RECEIPT - AQU1

Temperature - CT (C):	4.8
Preservation Correct:	Yes
Post-Preservatives:	N/A
Thermometer ID:	0715672
pH Paper ID:	0816272

ko_A COC MULTI 043020.rpt

Sample Custody

Relinquished (print & sign)	Jose A. Munoz	☑ Sampler ☑ Client ☐ ATL Field	Date 8/28/2024 Time 09:00 a.m.	☑ Iced / Refrig ☐ Custody Sealed
Received (print & sign)	Brendan Bourland	☐ Client ☑ ATL Field	Date 8/28/24 Time 0920	☑ Iced / Refrig ☐ CM / CTU
Relinquished (print & sign)	NFE 8/28/24	☐ Client ☐ ATL Field	Date Time	☐ Iced / Refrig ☐ CM / CTU
Received (print & sign)		☐ Client ☐ ATL Field	Date Time	☐ Iced / Refrig ☐ CM / CTU
Relinquished (print & sign)	Brendan Bourland	☐ Client ☑ ATL Field	Date 08/28/24 Time 15:55	☑ Iced / Refrig ☑ CM / CTU / Sealed
Received (print & sign)	Brendan Bourland	X Lab	Date 08/28/24 Time 15:55	X Cond Good X Iced / Refrig X CM / CTU

Field Sample ID	Start Date	Start Time	End Date	End Time	Composite Type	Sample Matrix	Container (Checked box indicates bottle arrived in lab) (Volume - Type - Preservative)	Lab ID
Lago Vista Golf Course Soil 0-6 Inches	8/24/2024	09:00 a.m.	8/24/2024	10:00 a.m.	Comp	S	☑ A SOIL 0.5LP ☑ B SOIL TKN 0.25LP ☑ C SOIL TS 0.1L	**H010265-01**
Lago Vista Golf Course Soil 6-18 Inches	8/24/2024	09:00 a.m.	8/24/2024	10:00 a.m.	Comp	S	☑ A SOIL 0.5LP ☑ B SOIL TKN 0.25LP ☑ C SOIL TS 0.1L	**H010265-02**
Lago Vista Golf Course Soil 18-30 Inches	8/24/2024	09:00 a.m.	8/24/2024	10:00 a.m.	Comp	S	☑ A SOIL 0.5LP ☑ B SOIL TKN 0.25LP ☑ C SOIL TS 0.1L	**H010265-03**

A TS SL Grav SM2540 G [NEL]
K TAMU Plant Available Mehlich 3 CNR [SUB]
N Total TAMU CALC ENTRY [CNR]
NO3N TAMU Extractable Mehlich 3 CNR [SUB]
SUB pH SL TAMU (1:2) CNR [SUB]
Ca TAMU Plant Available Mehlich 3 CNR [SUB] [ANR]
Mg TAMU Plant Available Mehlich 3 CNR [SUB] [ANR]
Na TAMU Plant Available Mehlich 3 CNR [SUB] [ANR]
P TAMU Plant Available Mehlich 3 CNR [SUB]
TKN SL AUTO SM4500 NH3 G [CNR]
Cond SL (1:2) Probe TAMU CNR [SUB]
N Total SL PKG TAMU [CNR]
NH4 TAMU KCL extract CNR [SUB]
Solids, Dry Weight
Y Billing N Total Calc

TEXAS A&M AGRILIFE EXTENSION

Soil Analysis Report

Soil, Water and Forage Testing Laboratory
Department of Soil and Crop Sciences
2478 TAMU
College Station, TX 77843-2478
(979)321-5960

Visit our website: http://soiltesting.tamu.edu

Report generated for:
Aqua-Tech Laboratories, Inc.
635 Phil Gramm Blvd
BRYAN, TX 77807

Sample received on: 9/3/2024
Printed on: 9/11/2024
Area Represented: 156.35 acres
SWFTL recommends <40 acres/sample

Travis County
Laboratory Number: 667110
Customer Sample ID: H010265-01A
Crop Grown: TURF FAIRWAYS , ATHLETIC FIELDS , ETC.

Analysis	Results	CL*	Units	ExLow	VLow	Low	Mod	High	VHigh	Excess.	
pH	**7.4**	(6.2)	-	**Slightly Alkaline**							
Conductivity	**69**	(-)	umho/cm	**None**			CL*				**Fertilizer Recommended**
Nitrate-N	**15**	(-)	ppm**								**25** lbs N/acre
Phosphorus	**97**	(50)	ppm								**0** lbs P2O5/acre
Potassium	**482**	(160)	ppm								**0** lbs K20/acre
Calcium	**4,701**	(180)	ppm								**0** lbs Ca/acre
Magnesium	**473**	(50)	ppm								**0** lbs Mg/acre
Sulfur	**35**	(13)	ppm								**0** lbs S/acre
Sodium	**44**	(-)	ppm								
Iron											
Zinc											
Manganese											
Copper											
Boron											
Limestone Requirement											**0.00** tons 100ECCE/acre
Ammonium-N	**3.1**		ppm								

*CL=Critical level is the point which no additional nutrient (excluding nitrate-N, sodium and conductivity) is recommended. **ppm=mg/kg

Nitrogen: Apply suggested nitrogen rate and then apply 40 lbs/A of nitrogen every 4 to 6 weeks as needed.

Online fertilizer calculators to determine appropriate fertilizers and application rates.
http://soiltesting.tamu.edu

Methods: pH and conductivity/ 2:1; nitrate-N/Cd-red.; P, K, Ca, Mg, Na, and S/Mehlich 3 by ICP; Fe, Zn, Mn, and Cu/DTPA by ICP; and B/hot water by ICP.

ProAnalysisVer. 2.19j

Soil Analysis Report

Soil, Water and Forage Testing Laboratory
Department of Soil and Crop Sciences
2478 TAMU
College Station, TX 77843-2478
(979)321-5960

Visit our website: http://soiltesting.tamu.edu

Report generated for:
Aqua-Tech Laboratories, Inc.
635 Phil Gramm Blvd
BRYAN, TX 77807

Sample received on: 9/3/2024
Printed on: 9/11/2024
Area Represented: 156.35 acres
SWFTL recommends <40 acres/sample

Travis County
Laboratory Number: 667111
Customer Sample ID: H010265-02A
Crop Grown: TURF FAIRWAYS , ATHLETIC FIELDS , ETC.

Analysis	Results	CL*	Units	ExLow	VLow	Low	Mod	High	VHigh	Excess.	
pH	**7.4**	(6.2)	-	**Slightly Alkaline**							
Conductivity	**291**	(-)	umho/cm	**None**			CL*				**Fertilizer Recommended**
Nitrate-N	**73**	(-)	ppm**								**0** lbs N/acre
Phosphorus	**95**	(50)	ppm								**0** lbs P2O5/acre
Potassium	**284**	(160)	ppm								**0** lbs K20/acre
Calcium	**3,684**	(180)	ppm								**0** lbs Ca/acre
Magnesium	**364**	(50)	ppm								**0** lbs Mg/acre
Sulfur	**39**	(13)	ppm								**0** lbs S/acre
Sodium	**111**	(-)	ppm								
Iron											
Zinc											
Manganese											
Copper											
Boron											
Limestone Requirement											**0.00** tons 100ECCE/acre
Ammonium-N	**14.6**		ppm								

*CL=Critical level is the point which no additional nutrient (excluding nitrate-N, sodium and conductivity) is recommended. **ppm=mg/kg

Nitrogen: Apply suggested nitrogen rate and then apply 40 lbs/A of nitrogen every 4 to 6 weeks as needed.

Online fertilizer calculators to determine appropriate fertilizers and application rates.
http://soiltesting.tamu.edu

Methods: pH and conductivity/ 2:1; nitrate-N/Cd-red.; P, K, Ca, Mg, Na, and S/Mehlich 3 by ICP; Fe, Zn, Mn, and Cu/DTPA by ICP; and B/hot water by ICP.

ProAnalysisVer. 2.19j

Soil Analysis Report

Soil, Water and Forage Testing Laboratory
Department of Soil and Crop Sciences
2478 TAMU
College Station, TX 77843-2478
(979)321-5960

Visit our website: http://soiltesting.tamu.edu

Report generated for:
Aqua-Tech Laboratories, Inc.
635 Phil Gramm Blvd
BRYAN, TX 77807

Sample received on: 9/3/2024
Printed on: 9/11/2024
Area Represented: 156.35 acres
SWFTL recommends <40 acres/sample

Travis County
Laboratory Number: 667112
Customer Sample ID: H010265-03A
Crop Grown: TURF FAIRWAYS , ATHLETIC FIELDS , ETC.

Analysis	Results	CL*	Units	ExLow	VLow	Low	Mod	High	VHigh	Excess.	
pH	**7.7**	(6.2)	-	**Mod. Alkaline**							
Conductivity	**215**	(-)	umho/cm	**None**			CL*				**Fertilizer Recommended**
Nitrate-N	**38**	(-)	ppm**								**0** lbs N/acre
Phosphorus	**67**	(50)	ppm								**0** lbs P2O5/acre
Potassium	**247**	(160)	ppm								**0** lbs K20/acre
Calcium	**4,432**	(180)	ppm								**0** lbs Ca/acre
Magnesium	**297**	(50)	ppm								**0** lbs Mg/acre
Sulfur	**36**	(13)	ppm								**0** lbs S/acre
Sodium	**87**	(-)	ppm								
Iron											
Zinc											
Manganese											
Copper											
Boron											
Limestone Requirement											**0.00** tons 100ECCE/acre
Ammonium-N	**10.9**		ppm								

*CL=Critical level is the point which no additional nutrient (excluding nitrate-N, sodium and conductivity) is recommended. **ppm=mg/kg

Nitrogen: Apply suggested nitrogen rate and then apply 40 lbs/A of nitrogen every 4 to 6 weeks as needed.

Online fertilizer calculators to determine appropriate fertilizers and application rates.
http://soiltesting.tamu.edu

Methods: pH and conductivity/ 2:1; nitrate-N/Cd-red.; P, K, Ca, Mg, Na, and S/Mehlich 3 by ICP; Fe, Zn, Mn, and Cu/DTPA by ICP; and B/hot water by ICP.

ProAnalysisVer. 2.19j

AQUA-TECH LABORATORIES — Chain-of-Custody and Analysis Request

All analyses must be performed by a TNI approved method certified by the TCEQ. Contact ATL's sample custodian via voice and email if your methods do not meet this criteria.

Aqua-Tech laboratories, Inc.

Austin: 3512 Montopolis Dr. Suite A, Austin, TX 78744, 512.301.9559

Bryan: 635 Phil Gramm Blvd. Bryan, TX 77807, 979.778.3707

T104704371

Test results meet all accreditation/certification requirements unless stated otherwise.

C-O-C # 364 - H010265

sco_ATL TAMU 011921

SHIPPED TO

TAMU - Soil Lab
2610 F&B Road
College Station, TX 77845
Phone: (979) 845-4816

DEFINITIONS

P	Plastic
G	Glass
L	Liter
CM	Custody Maintained
CTU	Custody Transfer Unbroken
ATL	Aqua-Tech Laboratories, Inc

Comments:

Please use Sample ID as PO# and email reports to reporting@aqua-techlabs.com.

Lines below document condition at receipt in lab (shipped to) listed above.

Cooler ID	Temp Read (C)	Corrected Temp (C)	Thermometer ID
901			

Please hold coolers for pick-up.

Sample Custody

Relinquished (print & sign)	Aaryn Guerrero	☐ Sampler ☐ Client ☑ ATL Field	Date 9/3/24 Time 11:57	☑ Iced / Refrig ☑ Custody Sealed
Received (print & sign)		☐ Client ☐ ATL Field	Date Time	☐ Iced / Refrig ☐ CM / CTU
Relinquished (print & sign)		☐ Client ☐ ATL Field	Date Time	☐ Iced / Refrig ☐ CM / CTU
Received (print & sign)		☐ Client ☐ ATL Field	Date Time	☐ Iced / Refrig ☐ CM / CTU
Relinquished (print & sign)		☐ Client ☐ ATL Field	Date Time	☐ Iced / Refrig ☐ CM / CTU / Sealed
Received (print & sign)	John L. Hall	☑ Lab	Date 09/03/24 Time 11:57a	☑ Cond Good ☐ Iced / Refrig ☐ CM / CTU

Sample ID Sampled / Matrix	Analysis Request	(ATL indicates cooler number in parentheses for each container - only required if more than one cooler listed above.)	Lab ID
H010265-01 08/26/24 10:00 Soil	***Mehlich 3 - TAMU*** NO3N Extractable; Na Plant Available; P Plant Available Mg Plant Available; K Plant Available; Ca Plant Available ***TAMU - 1:2 Soil Extract*** pH; Conductivity (1:2) ***TAMU - KCl Extract*** NH4 - Ammonium	( ) H010265-01 [A] - SOIL 0.5LP	
H010265-02 08/26/24 10:00 Soil	***Mehlich 3 - TAMU*** P Plant Available; NO3N Extractable; Na Plant Available Mg Plant Available; K Plant Available; Ca Plant Available ***TAMU - 1:2 Soil Extract*** pH; Conductivity (1:2) ***TAMU - KCl Extract*** NH4 - Ammonium	( ) H010265-02 [A] - SOIL 0.5LP	

Page 8 of 9 H010265_1 ATL 090124 FIN_ls 10 02 24 1740

AQUA-TECH LABORATORIES, INC.

Chain-of-Custody and Analysis Request

C-O-C # 364 - H010265

SHIPPED TO: TAMU - Soil Lab

Sample ID Sampled / Matrix	Analysis Request	(ATL indicates cooler number in parentheses for each container - only required if more than one cooler listed above.)	Lab ID
H010265-03 08/26/24 10:00 Soil	***Mehlich 3 - TAMU*** P Plant Available / NO3N Extractable / Na Plant Available Mg Plant Available / K Plant Available / Ca Plant Available ***TAMU - 1:2 Soil Extract*** pH / Conductivity (1:2) ***TAMU - KCl Extract*** NH4 - Ammonium	( ) H010265-03 [A] - SOIL 0.5LP	

Page 9 of 9 H010265_1 ATL 090124 FIN_ls 10 02 24 1740

2023 Cedar Trees Soil Analysis

email information for report date:
10/2/23 19:46

G013557

Lago Vista, City of

Attn: Chris Maxwell
chris.maxwell@lagovistatexas.gov

PO Box 4727
Lago Vista, TX 78645

August 2023 price increase.

Due to the increase in operational costs, Aqua-Tech Laboratories will be implementing a slight price increase. The new price list will be effective August 1, 2023.

Aqua-Tech values you as a customer and encourages you to reach out to our accounting staff at accounting@aqua-techlabs.com if you have questions.

Thank you for your business,
June M. Brien
Executive Technical Director

BRYAN FACILITY
635 Phil Gramm Boulevard
Bryan, TX 77807
Phone: (979) 778-3707
Fax: (979) 778-3193

AQUA-TECH LABORATORIES, INC.

AUSTIN FACILITY
3512 Montopolis Dr. Suite A
Austin, TX 78744
Phone: (512) 301-9559
Fax: (512) 301-9552

The analyses summarized in this report were performed by Aqua-Tech Laboratories, Inc. unless otherwise noted. Aqua-Tech Laboratories, Inc. holds accreditation from the State of Texas in accordance with TNI and/or through the TCEQ Drinking Water Commercial Laboratory Approval Program.

The following abbreviations indicate certification status:

NEL	TNI accredited parameter.
ANR	Accreditation not offered by the State of Texas.
DWP	Approval through the TCEQ Drinking Water Commercial Laboratory Approval Program.
INF	Aqua-Tech Laboratories, Inc. is not accredited for this parameter. It is reported on an informational basis only.

Subcontracted data summarized in this report is indicated by "Sub" in the Lab column.

Certificate: T104704371-22-26

NELAP ACCREDITED TNI LABORATORY

TCEQ Lab ID T104704371

General Definitions:

NR	Not Reported.
RPD	Relative Percent Difference.
% R	Percent Recovery.
dry	Results with the "dry" unit designation are reported on a "dry weight" basis.
SQL	The Sample Quantitation Limit is the value below which the parameter cannot reliably be detected. The SQL includes all sample preparations, dilutions and / or concentrations.
Adj MDL	The Adjusted Method Detection Limit is the MDL value adjusted for any sample dilutions or concentrations .
MDL	The Method Detection Limit is the lowest theoretical value that is statistically different from zero for a specific method, taking into account all preparation steps and instrument settings.

All samples are reported on an "as received" basis unless the designation "dry" is added to the reported unit.

Copies of Aqua-Tech Laboratories, Inc. procedures and individual sampling plans are available upon request. Note that samples are collected by Aqua-Tech Laboratories, Inc. personnel unless otherwise noted in the "Sample Collected" field of this report as "Client" or "CLT".

Samples included in this report were received in acceptable condition according to Aqua-Tech Laboratories, Inc. procedures and 40 CFR, Chapter I, Subchapter D, Part 136.3, TABLE II. - *Required containers, preservation techniques, and holding times*, unless otherwise noted in this report.

Record Retention:

All reports, raw data, and associated quality control data are kept on file for 10 years before being destroyed. Any client that would like copies of records must contact Aqua-Tech Laboratories, Inc. no later than six months prior to the scheduled disposal. An administrative fee for retrieval and distribution will apply.

This report was approved by:

June M. Brien, Technical Director

The results in this report apply only to the samples analyzed. This analytical report must be reproduced in its entirety unless written permission is granted by Aqua-Tech Laboratories, Inc.

BRYAN FACILITY
635 Phil Gramm Boulevard
Bryan, TX 77807
Phone: (979) 778-3707
Fax: (979) 778-3193

AQUA-TECH LABORATORIES, INC.

AUSTIN FACILITY
3512 Montopolis Dr. Suite A
Austin, TX 78744
Phone: (512) 301-9559
Fax: (512) 301-9552

Analytical Report

Lago Vista, City of

Report Printed: **10/2/23** **19:46**

G013557

See attached subcontract report for additional analysis and fertilizer recommendations

Lago Vista Cedar Breaks Soil 0-6 Inches

Collected: 08/07/23 14:00 by CLIENT
Received: 08/15/23 13:30 by Kaitlyn Johnson

Type Comp | *Matrix* Solid | *C-O-C #* G013557

Lab ID# G013557-01	Result	Units	Notes	MDL	Adj MDL	SQL	Lab	Analyzed	Method	Batch	
General Chemistry											
% Solids	**97.9**	g/100g (%)	Hold-01	0.10	0.10	0.10	*Austin*	08/16/23 14:07 SAR	SM2540 G 2015	M165310	NEL
Total Kjeldahl Nitrogen as N	**934**	mg/kg dry		0.13	33.0	50.7	*Bryan*	08/22/23 13:11 KMA	SM4500-NH3 G 2011	M165363	ANR
Plant Available Parameters											
Total Nitrogen	**936**	mg/kg dry wt.			N/A	N/A	*Calc*	10/02/23 19:31 PMY	Calculation	M167519	ANR

Please see the attached subcontract report for subcontracted data.

Lago Vista Cedar Breaks Soil 6-18 Inches

Collected: 08/07/23 14:00 by CLIENT
Received: 08/15/23 13:30 by Kaitlyn Johnson

Type Comp | *Matrix* Solid | *C-O-C #* G013557

Lab ID# G013557-02	Result	Units	Notes	MDL	Adj MDL	SQL	Lab	Analyzed	Method	Batch	
General Chemistry											
% Solids	**97.6**	g/100g (%)	Hold-01	0.10	0.10	0.10	*Austin*	08/16/23 14:07 SAR	SM2540 G 2015	M165310	NEL
Total Kjeldahl Nitrogen as N	**884**	mg/kg dry		0.13	33.1	50.9	*Bryan*	08/22/23 13:11 KMA	SM4500-NH3 G 2011	M165363	ANR
Plant Available Parameters											
Total Nitrogen	**887**	mg/kg dry wt.			N/A	N/A	*Calc*	10/02/23 19:31 PMY	Calculation	M167519	ANR

Please see the attached subcontract report for subcontracted data.

Lago Vista Cedar Breaks Soil 18-30 Inches

Collected: 08/07/23 14:00 by CLIENT
Received: 08/15/23 13:30 by Kaitlyn Johnson

Type Comp | *Matrix* Solid | *C-O-C #* G013557

Lab ID# G013557-03	Result	Units	Notes	MDL	Adj MDL	SQL	Lab	Analyzed	Method	Batch	
General Chemistry											
% Solids	**97.1**	g/100g (%)	Hold-01	0.10	0.10	0.10	*Austin*	08/16/23 14:07 SAR	SM2540 G 2015	M165310	NEL
Total Kjeldahl Nitrogen as N	**834**	mg/kg dry		0.13	33.3	51.2	*Bryan*	08/22/23 13:11 KMA	SM4500-NH3 G 2011	M165363	ANR
Plant Available Parameters											
Total Nitrogen	**835**	mg/kg dry wt.			N/A	N/A	*Calc*	10/02/23 19:31 PMY	Calculation	M167519	ANR

Please see the attached subcontract report for subcontracted data.

Explanation of Notes

Hold-01	This result was analyzed outside of the EPA recommended holding time.

BRYAN FACILITY
635 Phil Gramm Boulevard
Bryan, TX 77807
Phone: (979) 778-3707
Fax: (979) 778-3193

AQUA-TECH LABORATORIES, INC.

AUSTIN FACILITY
3512 Montopolis Dr. Suite A
Austin, TX 78744
Phone: (512) 301-9559
Fax: (512) 301-9552

Analytical Report

Lago Vista, City of

Report Printed: **10/2/23** **19:46**

G013557

General Chemistry - Quality Control

	Result	Units	Notes	MDL	SQL	Analyzed	Spike Amount	Source Result	%R	%R Limits	RPD	RPD Limit	Batch	
% Solids - SM2540 G 2015														*Austin*
Blank	<0.10	g/100g (%)		0.10	0.10	08/16/23 14:07 SAR							M165310	
Duplicate	97.9	g/100g (%)		0.10	0.10	08/16/23 14:07 SAR		97.9			0.0102	10	M165310	
Duplicate	97.9	%		0.100	0.100	08/16/23 14:07 SAR		97.9			0.0102	5.81	M165310	
Total Kjeldahl Nitrogen as N - SM4500-NH3 G 2011														*Bryan*
Initial Cal Check	8.39	mg/L				08/22/23 13:11 KMA	9.12		92.0	90 - 110			2308273	
Low Cal Check	0.18	mg/L				08/22/23 13:11 KMA	0.200		91.5	70 - 130			2308273	
Blank	<0.20	mg/kg wet		0.13	0.20	08/22/23 13:11 KMA							M165363	
LCS	8.49	mg/kg wet		0.13	0.20	08/22/23 13:11 KMA	8.00		106	85 - 115			M165363	
LCS Dup	8.36	mg/kg wet		0.13	0.20	08/22/23 13:11 KMA	8.00		105	85 - 115	1.51	10	M165363	
Matrix Spike	21700	mg/kg dry		330	507	08/22/23 13:11 KMA	20300	934	102	70 - 130			M165363	
Matrix Spike Dup	21600	mg/kg dry		330	507	08/22/23 13:11 KMA	20300	934	102	70 - 130	0.379	20	M165363	

Sample Preparation Summary

Sample	Method	Prepared	Lab	Bottle	Initial	Units	Final	Units	External Dilution Factor	Batch
G013557-01										
% Solids	SM2540 G 2015	8/16/23 14:07 SAR	Austin	A	10.0	g	10.0	mL	1	M165310
Subcontract	Sub Contract Data Entry	10/2/23 12:19 PMY	Bryan	-	-	-	-	-	-	M167500
Total Kjeldahl Nitrogen as N	SM4500-NH3 G 2011	8/17/23 11:49 CTG	Bryan	A	0.101	g	25.0	mL	1	M165363
Total Nitrogen	Calculation	10/2/23 19:31 PMY			1.00	g	1.00	mL	1	M167519
G013557-02										
% Solids	SM2540 G 2015	8/16/23 14:07 SAR	Austin	A	10.0	g	10.0	mL	1	M165310
Subcontract	Sub Contract Data Entry	10/2/23 12:19 PMY	Bryan	-	-	-	-	-	-	M167500
Total Kjeldahl Nitrogen as N	SM4500-NH3 G 2011	8/17/23 11:49 CTG	Bryan	A	0.101	g	25.0	mL	1	M165363
Total Nitrogen	Calculation	10/2/23 19:31 PMY			1.00	g	1.00	mL	1	M167519
G013557-03										
% Solids	SM2540 G 2015	8/16/23 14:07 SAR	Austin	A	10.0	g	10.0	mL	1	M165310
Subcontract	Sub Contract Data Entry	10/2/23 12:19 PMY	Bryan	-	-	-	-	-	-	M167500
Total Kjeldahl Nitrogen as N	SM4500-NH3 G 2011	8/17/23 11:49 CTG	Bryan	A	0.101	g	25.0	mL	1	M165363
Total Nitrogen	Calculation	10/2/23 19:31 PMY			1.00	g	1.00	mL	1	M167519

AQUA-TECH LABORATORIES, INC.

Chain-of-Custody and Analysis Request

Client / Project Name: Lago Vista, City of
Lago Vista WWTP Soil REC Cedar Breaks

Contact Information
Name: Chris Maxwell
Address: PO Box 4727
City: Lago Vista
State: TX Zip: 78645
Phone: (512) 267-1155
email:

Definitions
DW Drinking Water
NP Non-Potable Water
S Solid
CM Custody Maintained
CTU Custody Transfer Unbroken
CT Corrected Temperature

Reagent tracking is available upon request.

TCEQ LAB ID: T104704371

Aqua-Tech laboratories, Inc.
Austin: 3512 Montopolis Dr., Austin, TX 78744, 512.301.9559
Bryan: 635 Phil Gramm Blvd., Bryan, TX 77807, 979.778.3707
Test results meet all accreditation/certification requirements unless stated otherwise.

C-O-C # **G013557**
Page 1 of 1
rte_ATL COC 012723.rpt

Analyses Requested: "A" prefix indicates Austin, all others Bryan or Subcontracted, indicated by [SUB].
Name format: Analysis-Matrix-Technology-Method.

[NEL] = NELAP accredited parameter
[SUB] = NELAP accredited subcontracted parameter
[CNR] = No NELAP accreditation required or available
[INF] = Informational only (not NELAC certified)

By relinquishing the samples listed below to Aqua-Tech laboratories, Inc. (ATL), the client agrees to the following terms. Samples will be analyzed by a method that is within ATL's NELAP fields of accreditation (FoA). Analytes requiring an accredited method that is not within ATL's FoA will be subcontracted to a NELAP lab that is accredited for that method. Clients will be notified of the subcontract lab's details. Other analytes not requiring accreditation will be analyzed by a compendial method. If a specific method is required, the client will note the method in the "Analysis Requested" column. The client approves all method modifications documented by ATL or the subcontract lab.
A current list of ATL's NELAC fields of accreditation and other methods are available on request.

Comments:

- LAB RECEIPT - CAT
Temperature - CT (C): 4.0 / 4.1 CT
Preservation Correct: Y
Post-Preservatives: N
Thermometer ID: 0764480
pH Paper ID: N/A

Sample Custody

Relinquished (print & sign)	Jose A. Munoz [signature]	☑ Sampler ☐ Client ☐ ATL Field	Date 8/15/2023 Time 13:30 p.m. ☐ Iced / Refrig ☐ Custody Sealed
Received (print & sign)		☐ Client ☐ ATL Field	Date Time ☐ Iced / Refrig ☐ CM / CTU
Relinquished (print & sign)		☐ Client ☐ ATL Field	Date Time ☐ Iced / Refrig ☐ CM / CTU
Received (print & sign)		☐ Client ☐ ATL Field	Date Time ☐ Iced / Refrig ☐ CM / CTU
Relinquished (print & sign)		☐ Client ☐ ATL Field	Date Time ☐ Iced / Refrig ☐ CM / CTU / Sealed
Received (print & sign)	Kaitlyn Johnson [signature]	✓ Lab	Date 8/15/23 Time 1330 ✓ Cond Good ✓ Iced / Refrig ✓ CM / CTU

Return

Field Sample ID	Start Date	Start Time	End Date	End Time	Composite Type	Sample Matrix	Container (Checked box indicates bottle arrived in lab) (Volume - Type - Preservative)	Lab ID
Lago Vista Cedar Breaks Soil 0-6 Inches	8/7/2023	12:00 p.m	8/7/2023	14:00 p.m	Comp	S	☑ A SOIL 0.5LP ☑ B SOIL TKN 0.25LP ☑ C SOIL TS 0.1L	**G013557-01**
Lago Vista Cedar Breaks Soil 6-18 Inches	8/7/2023	12:00 p.m.	8/7/2023	14:00 p.m	Comp	S	☑ A SOIL 0.5LP ☑ B SOIL TKN 0.25LP ☑ C SOIL TS 0.1L	**G013557-02**
Lago Vista Cedar Breaks Soil 18-30 Inches	8/7/2023	12:00 p.m	8/7/2023	14:00 p.m	Comp	S	☑ A SOIL 0.5LP ☑ B SOIL TKN 0.25LP ☑ C SOIL TS 0.1L	**G013557-03**

Lago Vista Cedar Breaks Soil 0-6 Inches:
A TS SL Grav SM2540 G [NEL]
K TAMU Plant Available Mehlich 3 CNR [SUB]
N Total TAMU CALC ENTRY [CNR]
NO3N TAMU Extractable Mehlich 3 CNR [SUB]
SUB pH SL TAMU (1:2) CNR [SUB]
Ca TAMU Plant Available Mehlich 3 CNR [SUB] [ANR]
Mg TAMU Plant Available Mehlich 3 CNR [SUB] [ANR]
Na TAMU Plant Available Mehlich 3 CNR [SUB] [ANR]
P TAMU Plant Available Mehlich 3 CNR [SUB]
TKN SL AUTO SM4500 NH3 G [CNR]
Cond SL (1:2) Probe TAMU CNR [SUB]
N Total SL PKG TAMU [CNR]
NH4 TAMU KCL extract CNR [SUB]
Solids, Dry Weight
Y Billing N Total Calc

Lago Vista Cedar Breaks Soil 6-18 Inches:
A TS SL Grav SM2540 G [NEL]
K TAMU Plant Available Mehlich 3 CNR [SUB]
N Total TAMU CALC ENTRY [CNR]
NO3N TAMU Extractable Mehlich 3 CNR [SUB]
SUB pH SL TAMU (1:2) CNR [SUB]
Ca TAMU Plant Available Mehlich 3 CNR [SUB] [ANR]
Mg TAMU Plant Available Mehlich 3 CNR [SUB] [ANR]
Na TAMU Plant Available Mehlich 3 CNR [SUB] [ANR]
P TAMU Plant Available Mehlich 3 CNR [SUB]
TKN SL AUTO SM4500 NH3 G [CNR]
Cond SL (1:2) Probe TAMU CNR [SUB]
N Total SL PKG TAMU [CNR]
NH4 TAMU KCL extract CNR [SUB]
Solids, Dry Weight
Y Billing N Total Calc

Lago Vista Cedar Breaks Soil 18-30 Inches:
A TS SL Grav SM2540 G [NEL]
K TAMU Plant Available Mehlich 3 CNR [SUB]
N Total TAMU CALC ENTRY [CNR]
NO3N TAMU Extractable Mehlich 3 CNR [SUB]
SUB pH SL TAMU (1:2) CNR [SUB]
Ca TAMU Plant Available Mehlich 3 CNR [SUB] [ANR]
Mg TAMU Plant Available Mehlich 3 CNR [SUB] [ANR]
Na TAMU Plant Available Mehlich 3 CNR [SUB] [ANR]
P TAMU Plant Available Mehlich 3 CNR [SUB]
TKN SL AUTO SM4500 NH3 G [CNR]
Cond SL (1:2) Probe TAMU CNR [SUB]
N Total SL PKG TAMU [CNR]
NH4 TAMU KCL extract CNR [SUB]
Solids, Dry Weight
Y Billing N Total Calc

TEXAS A&M AGRILIFE EXTENSION

Soil Analysis Report

Soil, Water and Forage Testing Laboratory
Department of Soil and Crop Sciences
2478 TAMU
College Station, TX 77843-2478
979-845-4816 (phone)
979-845-5958 (FAX)
Visit our website: http://soiltesting.tamu.edu

Report generated for:
Aqua-Tech Laboratories, Inc.
635 Phil Gramm Blvd
BRYAN, TX 77807

Sample received on: 8/16/2023
Printed on: 8/23/2023
Area Represented: 79.6 acres
SWFTL recommends <40 acres/sample

Brazos County
Laboratory Number: 638136
Customer Sample ID: G013557-01
Crop Grown: IMPROVED AND HYBRID BERMUDA GRASS (3 HAY CUTTINGS-2 TONS/A AVG.)

Analysis	Results	CL*	Units	ExLow VLow Low Mod High VHigh Excess.	Fertilizer Recommended
pH	7.7	(5.8)	-	Mod. Alkaline	
Conductivity	111	(-)	umho/cm	None	
Nitrate-N	2	(-)	ppm**		95 lbs N/acre
Phosphorus	14	(50)	ppm		85 lbs P2O5/acre
Potassium	101	(150)	ppm		80 lbs K20/acre
Calcium	23,711	(180)	ppm		0 lbs Ca/acre
Magnesium	264	(50)	ppm		0 lbs Mg/acre
Sulfur	126	(13)	ppm		0 lbs S/acre
Sodium	17	(-)	ppm		
Iron					
Zinc					
Manganese					
Copper					
Boron					
Limestone Requirement					0.00 tons 100ECCE/acre
Dry Matter	97.1		%		
Ammonium-N	5.5		ppm		

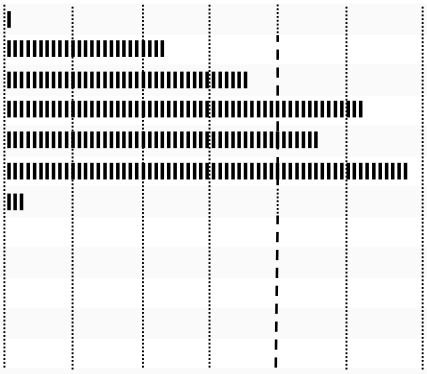

*CL=Critical level is the point which no additional nutrient (excluding nitrate-N, sodium and conductivity) is recommended. **ppm=mg/kg

Nitrogen: Apply an additional 100 lbs/A of nitrogen for each subsequent hay cuttings.

Potassium: Split apply potassium fertilizer if recommendation is for more than 75 lbs K2O per acre.

New online fertilizer calculators have been placed on the laboratory's website to determine appropriate fertilizers to purchase and determine their application rates.
http://soiltesting.tamu.edu/webpages/calculator.html

Methods: pH and conductivity/ 2:1; nitrate-N/Cd-red.; P, K, Ca, Mg, Na, and S/Mehlich 3 by ICP; Fe, Zn, Mn, and Cu/DTPA by ICP; and B/hot water by ICP.

ProAnalysisVer. 2.19j

TEXAS A&M AGRILIFE EXTENSION

Soil Analysis Report

Soil, Water and Forage Testing Laboratory
Department of Soil and Crop Sciences
2478 TAMU
College Station, TX 77843-2478
979-845-4816 (phone)
979-845-5958 (FAX)
Visit our website: http://soiltesting.tamu.edu

Report generated for:
Aqua-Tech Laboratories, Inc.
635 Phil Gramm Blvd
BRYAN, TX 77807

Sample received on: 8/16/2023
Printed on: 8/23/2023
Area Represented: 79.6 acres
SWFTL recommends <40 acres/sample

Brazos County
Laboratory Number: 638137
Customer Sample ID: G013557-02
Crop Grown: IMPROVED AND HYBRID BERMUDA GRASS (3 HAY CUTTINGS-2 TONS/A AVG.)

Analysis	Results	CL*	Units	ExLow VLow Low Mod High VHigh Excess.	Fertilizer Recommended
pH	7.8	(5.8)	-	Mod. Alkaline	
Conductivity	109	(-)	umho/cm	None	
Nitrate-N	3	(-)	ppm**		90 lbs N/acre
Phosphorus	17	(50)	ppm		80 lbs P2O5/acre
Potassium	96	(150)	ppm		85 lbs K20/acre
Calcium	21,057	(180)	ppm		0 lbs Ca/acre
Magnesium	267	(50)	ppm		0 lbs Mg/acre
Sulfur	117	(13)	ppm		0 lbs S/acre
Sodium	14	(-)	ppm		
Iron					
Zinc					
Manganese					
Copper					
Boron					
Limestone Requirement					0.00 tons 100ECCE/acre
Dry Matter	97.0		%		
Ammonium-N	5.0		ppm		

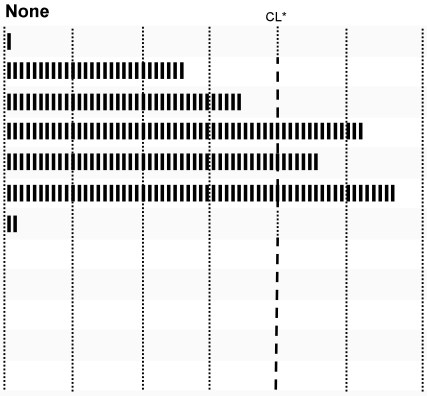

*CL=Critical level is the point which no additional nutrient (excluding nitrate-N, sodium and conductivity) is recommended. **ppm=mg/kg

Nitrogen: Apply an additional 100 lbs/A of nitrogen for each subsequent hay cuttings.

Potassium: Split apply potassium fertilizer if recommendation is for more than 75 lbs K2O per acre.

New online fertilizer calculators have been placed on the laboratory's website to determine appropriate fertilizers to purchase and determine their application rates.
http://soiltesting.tamu.edu/webpages/calculator.html

Methods: pH and conductivity/ 2:1; nitrate-N/Cd-red.; P, K, Ca, Mg, Na, and S/Mehlich 3 by ICP; Fe, Zn, Mn, and Cu/DTPA by ICP; and B/hot water by ICP.

ProAnalysisVer. 2.19j

TEXAS A&M AGRILIFE EXTENSION

Soil Analysis Report

Soil, Water and Forage Testing Laboratory
Department of Soil and Crop Sciences
2478 TAMU
College Station, TX 77843-2478
979-845-4816 (phone)
979-845-5958 (FAX)
Visit our website: http://soiltesting.tamu.edu

Report generated for:
Aqua-Tech Laboratories, Inc.
635 Phil Gramm Blvd
BRYAN, TX 77807

Sample received on: 8/16/2023
Printed on: 8/23/2023
Area Represented: 79.6 acres
SWFTL recommends <40 acres/sample

Brazos County
Laboratory Number: 638138
Customer Sample ID: G013557-03
Crop Grown: IMPROVED AND HYBRID BERMUDA GRASS (3 HAY CUTTINGS-2 TONS/A AVG.)

Analysis	Results	CL*	Units	ExLow VLow Low Mod High VHigh Excess.	Fertilizer Recommended
pH	7.8	(5.8)	-	Mod. Alkaline	
Conductivity	105	(-)	umho/cm	None	
Nitrate-N	1	(-)	ppm**		95 lbs N/acre
Phosphorus	8	(50)	ppm		100 lbs P2O5/acre
Potassium	96	(150)	ppm		90 lbs K20/acre
Calcium	23,057	(180)	ppm		0 lbs Ca/acre
Magnesium	242	(50)	ppm		0 lbs Mg/acre
Sulfur	121	(13)	ppm		0 lbs S/acre
Sodium	13	(-)	ppm		
Iron					
Zinc					
Manganese					
Copper					
Boron					
Limestone Requirement					0.00 tons 100ECCE/acre
Dry Matter	97.8		%		
Ammonium-N	5.0		ppm		

*CL=Critical level is the point which no additional nutrient (excluding nitrate-N, sodium and conductivity) is recommended. **ppm=mg/kg

Nitrogen: Apply an additional 100 lbs/A of nitrogen for each subsequent hay cuttings.

Potassium: Split apply potassium fertilizer if recommendation is for more than 75 lbs K2O per acre.

New online fertilizer calculators have been placed on the laboratory's website to determine appropriate fertilizers to purchase and determine their application rates.
http://soiltesting.tamu.edu/webpages/calculator.html

Methods: pH and conductivity/ 2:1; nitrate-N/Cd-red.; P, K, Ca, Mg, Na, and S/Mehlich 3 by ICP; Fe, Zn, Mn, and Cu/DTPA by ICP; and B/hot water by ICP.

ProAnalysisVer. 2.19j

AQUA-TECH LABORATORIES — **Chain-of-Custody and Analysis Request**

All analyses must be performed by a TNI approved method certified by the TCEQ. Contact ATL's sample custodian via voice and email if your methods do not meet this criteria.

Aqua-Tech laboratories, Inc.

Austin	Bryan
3512 Montopolis Dr. Suite A Austin, TX 78744 512.301.9559	635 Phil Gramm Blvd. Bryan, TX 77807 979.778.3707

T104704371
TX239

Test results meet all accreditation/certification requirements unless stated otherwise.

C-O-C # **757 - G013557**

Page 1 of 2

sco_ATL TAMU 011921

SHIPPED TO
TAMU - Soil Lab
2610 F&B Road
College Station, TX 77845
Phone: (979) 845-4816

DEFINITIONS

P	Plastic
G	Glass
L	Liter
CM	Custody Maintained
CTU	Custody Transfer Unbroken
ATL	Aqua-Tech Laboratories, Inc

Comments:

Please use Sample ID as PO# and email reports to reporting@aqua-techlabs.com.

Sample Custody

Relinquished (print & sign)	James Fitz	☐ Sampler ☐ Client ☒ ATL Field	Date 8-16-23 Time 1016	☒ Iced / Refrig ☐ Custody Sealed
Received (print & sign)		☐ Client ☐ ATL Field	Date Time	☐ Iced / Refrig ☐ CM / CTU
Relinquished (print & sign)		☐ Client ☐ ATL Field	Date Time	☐ Iced / Refrig ☐ CM / CTU
Received (print & sign)		☐ Client ☐ ATL Field	Date Time	☐ Iced / Refrig ☐ CM / CTU
Relinquished (print & sign)	James Fitz	☐ Client ☐ ATL Field	Date 8-16-23 Time 1055	☐ Iced / Refrig ☐ CM / CTU / Sealed
Received (print & sign)	Jeff Waskom	☒ Lab	Date 8/16/23 Time 10:56	☒ Cond Good ☒ Iced / Refrig ☒ CM / CTU

Lines below document condition at receipt in lab (shipped to) listed above.

Cooler ID	Temp Read (C)	Corrected Temp (C)	Thermometer ID

Please hold coolers for pick-up.

Sample ID Sampled / Matrix	Analysis Request	(ATL indicates cooler number in parentheses for each container - only required if more than one cooler listed above.)	Lab ID
G013557-01 08/07/23 14:00 Soil	***% calculation*** Solids, Percent ***Mehlich 3 - TAMU*** P Plant Available; NO3N Extractable; Na Plant Available Mg Plant Available; K Plant Available; Ca Plant Available ***TAMU - 1:2 Soil Extract*** pH; Conductivity (1:2) ***TAMU - KCl Extract*** NH4 - Ammonium		

AQUA-TECH LABORATORIES, INC.

Chain-of-Custody and Analysis Request

C-O-C # **757 - G013557**

SHIPPED TO: **TAMU - Soil Lab**

Sample ID Sampled / Matrix	Analysis Request	(ATL indicates cooler number in parentheses for each container - only required if more than one cooler listed above.)	Lab ID
G013557-02 08/07/23 14:00 Soil	***% calculation*** Solids, Percent ***Mehlich 3 - TAMU*** P Plant Available / NO3N Extractable / Na Plant Available Mg Plant Available / K Plant Available / Ca Plant Available ***TAMU - 1:2 Soil Extract*** pH / Conductivity (1:2) ***TAMU - KCl Extract*** NH4 - Ammonium		
G013557-03 08/07/23 14:00 Soil	***% calculation*** Solids, Percent ***Mehlich 3 - TAMU*** P Plant Available / NO3N Extractable / Na Plant Available Mg Plant Available / K Plant Available / Ca Plant Available ***TAMU - 1:2 Soil Extract*** pH / Conductivity (1:2) ***TAMU - KCl Extract*** NH4 - Ammonium		

2024 Cedar Trees Soil Analysis

email information for report date:
10/2/24 17:40

H010266

Lago Vista, City of

Attn: Chris Maxwell
chris.maxwell@lagovistatexas.gov

PO Box 4727
Lago Vista, TX 78645

Please contact us for your sampling needs or if you have any questions. Some convenient contacts are listed below. You can also access your results and reports through our ClientConnect ™ portal on our website (www.aqua-techlabs.com).

For sampling questions:

samplingbryan@aqua-techlabs.com (Bryan area)
samplingaustin@aqua-techlabs.com (Austin area)

reporting@aqua-techlabs.com (report questions)

Aqua-Tech values you as a customer and encourages you to speak with our staff at 979-778-3707 or the above emails if you have questions.

Thank you for your business,
June M. Brien
Executive Technical Director

BRYAN FACILITY
635 Phil Gramm Boulevard
Bryan, TX 77807
Phone: (979) 778-3707
Fax: (979) 778-3193

AQUA-TECH LABORATORIES

AUSTIN FACILITY
3512 Montopolis Dr. Suite A
Austin, TX 78744
Phone: (512) 301-9559
Fax: (512) 301-9552

The analyses summarized in this report were performed by Aqua-Tech Laboratories, Inc. unless otherwise noted. Aqua-Tech Laboratories, Inc. holds accreditation from the State of Texas in accordance with TNI and/or through the TCEQ Drinking Water Commercial Laboratory Approval Program.

The following abbreviations indicate certification status:

NEL	TNI accredited parameter.
ANR	Accreditation not offered by the State of Texas.
DWP	Approval through the TCEQ Drinking Water Commercial Laboratory Approval Program.
INF	Aqua-Tech Laboratories, Inc. is not accredited for this parameter. It is reported on an informational basis only.

Subcontracted data summarized in this report is indicated by "Sub" in the Lab column.

Certificate: TX-C24-00311

TCEQ Lab ID T104704371

General Definitions:

NR	Not Reported.
RPD	Relative Percent Difference.
% R	Percent Recovery.
dry	Results with the "dry" unit designation are reported on a "dry weight" basis.
SQL	The Sample Quantitation Limit is the value below which the parameter cannot reliably be detected. The SQL includes all sample preparations, dilutions and / or concentrations.
Adj MDL	The Adjusted Method Detection Limit is the MDL value adjusted for any sample dilutions or concentrations .
MDL	The Method Detection Limit is the lowest theoretical value that is statistically different from zero for a specific method, taking into account all preparation steps and instrument settings.

All samples are reported on an "as received" basis unless the designation "dry" is added to the reported unit.

Copies of Aqua-Tech Laboratories, Inc. procedures and individual sampling plans are available upon request. Note that samples are collected by Aqua-Tech Laboratories, Inc. personnel unless otherwise noted in the "Sample Collected" field of this report as "Client" or "CLT".

Samples included in this report were received in acceptable condition according to Aqua-Tech Laboratories, Inc. procedures and 40 CFR, Chapter I, Subchapter D, Part 136.3, TABLE II. - *Required containers, preservation techniques, and holding times*, unless otherwise noted in this report.

Record Retention:

All reports, raw data, and associated quality control data are kept on file for 10 years before being destroyed. Any client that would like copies of records must contact Aqua-Tech Laboratories, Inc. no later than six months prior to the scheduled disposal. An administrative fee for retrieval and distribution will apply.

This report was approved by:

June M. Brien, Technical Director

The results in this report apply only to the samples analyzed. This analytical report must be reproduced in its entirety unless written permission is granted by Aqua-Tech Laboratories, Inc.

BRYAN FACILITY
635 Phil Gramm Boulevard
Bryan, TX 77807
Phone: (979) 778-3707
Fax: (979) 778-3193

AQUA-TECH LABORATORIES

AUSTIN FACILITY
3512 Montopolis Dr. Suite A
Austin, TX 78744
Phone: (512) 301-9559
Fax: (512) 301-9552

Analytical Report

Lago Vista, City of

Report Printed: **10/2/24** **17:40**

H010266

Lago Vista Cedar Breaks Soil 0-6 Inches

Collected: 08/26/24 14:00 by CLIENT
Received: 08/28/24 15:55 by Brendan Bourland

Type: Comp | *Matrix*: Solid | *C-O-C #*: H010266

Lab ID# H010266-01

	Result	Units	Notes	MDL	Adj MDL	SQL	Lab	Analyzed	Method	Batch	
General Chemistry											
% Solids	**95.3**	g/100g (%)		0.10	0.10	0.10	*Austin*	08/29/24 17:05 KHA	SM2540 G 2015	M182072	NEL
Total Kjeldahl Nitrogen as N	**812**	mg/kg dry		0.13	33.7	51.9	*Bryan*	09/03/24 13:32 KMA	SM4500-NH3 G 2011	M182217	ANR
Plant Available Parameters											
Total Nitrogen	**814**	mg/kg dry wt.			N/A	N/A	*Calc*	09/30/24 18:57 PMY	Calculation	M183483	ANR

Please see the attached subcontract report for subcontracted data.

Lago Vista Cedar Breaks Soil 6-18 Inches

Collected: 08/26/24 14:00 by CLIENT
Received: 08/28/24 15:55 by Brendan Bourland

Type: Comp | *Matrix*: Solid | *C-O-C #*: H010266

Lab ID# H010266-02

	Result	Units	Notes	MDL	Adj MDL	SQL	Lab	Analyzed	Method	Batch	
General Chemistry											
% Solids	**94.4**	g/100g (%)		0.10	0.10	0.10	*Austin*	08/29/24 17:05 KHA	SM2540 G 2015	M182072	NEL
Total Kjeldahl Nitrogen as N	**1470**	mg/kg dry		0.13	34.4	52.9	*Bryan*	09/03/24 13:32 KMA	SM4500-NH3 G 2011	M182217	ANR
Plant Available Parameters											
Total Nitrogen	**1480**	mg/kg dry wt.			N/A	N/A	*Calc*	09/30/24 18:57 PMY	Calculation	M183483	ANR

Please see the attached subcontract report for subcontracted data.

Lago Vista Cedar Breaks Soil 18-30 Inches

Collected: 08/26/24 14:00 by CLIENT
Received: 08/28/24 15:55 by Brendan Bourland

Type: Comp | *Matrix*: Solid | *C-O-C #*: H010266

Lab ID# H010266-03

	Result	Units	Notes	MDL	Adj MDL	SQL	Lab	Analyzed	Method	Batch	
General Chemistry											
% Solids	**91.6**	g/100g (%)		0.10	0.10	0.10	*Austin*	08/29/24 17:05 KHA	SM2540 G 2015	M182072	NEL
Total Kjeldahl Nitrogen as N	**913**	mg/kg dry		0.13	35.3	54.4	*Bryan*	09/03/24 13:32 KMA	SM4500-NH3 G 2011	M182217	ANR
Plant Available Parameters											
Total Nitrogen	**916**	mg/kg dry wt.			N/A	N/A	*Calc*	09/30/24 18:57 PMY	Calculation	M183483	ANR

Please see the attached subcontract report for subcontracted data.

BRYAN FACILITY
635 Phil Gramm Boulevard
Bryan, TX 77807
Phone: (979) 778-3707
Fax: (979) 778-3193

AQUA-TECH LABORATORIES

AUSTIN FACILITY
3512 Montopolis Dr. Suite A
Austin, TX 78744
Phone: (512) 301-9559
Fax: (512) 301-9552

Analytical Report

Lago Vista, City of

Report Printed: **10/2/24** **17:40**

H010266

General Chemistry - Quality Control

	Result	Units	Notes	MDL	SQL	Analyzed	Spike Amount	Source Result	%R	%R Limits	RPD	RPD Limit	Batch
% Solids - SM2540 G 2015													*Austin*
Blank	<0.10	g/100g (%)		0.10	0.10	08/29/24 17:05 KHA							M182072
Duplicate	94.2	%		0.100	0.100	08/29/24 17:05 KHA		94.4			0.148	10	M182072
Duplicate	94.2	g/100g (%)		0.10	0.10	08/29/24 17:05 KHA		94.4			0.148	10	M182072
Total Kjeldahl Nitrogen as N - SM4500-NH3 G 2011													*Bryan*
Initial Cal Check	3.45	mg/L				09/03/24 13:32 KMA	3.38		102	90 - 110			2409018
Low Cal Check	0.21	mg/L				09/03/24 13:32 KMA	0.200		104	70 - 130			2409018
Blank	<0.20	mg/kg wet		0.13	0.20	09/03/24 13:32 KMA							M182217
LCS	4.07	mg/kg wet		0.13	0.20	09/03/24 13:32 KMA	4.00		102	91 - 116			M182217
LCS Dup	4.13	mg/kg wet		0.13	0.20	09/03/24 13:32 KMA	4.00		103	91 - 116	1.46	10	M182217
Matrix Spike	3200	mg/kg dry		74.5	115	09/03/24 13:32 KMA	2290	1070	92.8	88.2 - 119			M182217
Matrix Spike Dup	3210	mg/kg dry		74.5	115	09/03/24 13:32 KMA	2290	1070	93.2	88.2 - 119	0.457	20	M182217

Sample Preparation Summary

Sample	Method	Prepared	Lab	Bottle	Initial	Units	Final	Units	External Dilution Factor	Batch
H010266-01										
% Solids	SM2540 G 2015	8/29/24 17:05 KHA	Austin	C	10.0	g	10.0	mL	1	M182072
Subcontract	Sub Contract Data Entry	9/25/24 18:01 PMY	Bryan	-	-	-	-	-	-	M183270
Total Kjeldahl Nitrogen as N	SM4500-NH3 G 2011	9/3/24 8:00 CTG	Bryan	B	0.101	g	25.0	mL	1	M182217
Total Nitrogen	Calculation	9/30/24 18:57 PMY			1.00	g	1.00	mL	1	M183483
H010266-02										
% Solids	SM2540 G 2015	8/29/24 17:05 KHA	Austin	C	10.0	g	10.0	mL	1	M182072
Subcontract	Sub Contract Data Entry	9/25/24 18:01 PMY	Bryan	-	-	-	-	-	-	M183270
Total Kjeldahl Nitrogen as N	SM4500-NH3 G 2011	9/3/24 8:00 CTG	Bryan	B	0.100	g	25.0	mL	1	M182217
Total Nitrogen	Calculation	9/30/24 18:57 PMY			1.00	g	1.00	mL	1	M183483
H010266-03										
% Solids	SM2540 G 2015	8/29/24 17:05 KHA	Austin	C	10.0	g	10.0	mL	1	M182072
Subcontract	Sub Contract Data Entry	9/25/24 18:01 PMY	Bryan	-	-	-	-	-	-	M183270
Total Kjeldahl Nitrogen as N	SM4500-NH3 G 2011	9/3/24 8:00 CTG	Bryan	B	0.100	g	25.0	mL	1	M182217
Total Nitrogen	Calculation	9/30/24 18:57 PMY			1.00	g	1.00	mL	1	M183483

AQUA-TECH LABORATORIES, INC.

Chain-of-Custody and Analysis Request

Client / Project Name: Lago Vista, City of
Lago Vista WWTP Soil REC Cedar Breaks

Contact Information
Name: Chris Maxwell
Address: PO Box 4727
City: Lago Vista
State: TX Zip: 78645
Phone: (512) 267-1155
email:

Definitions
DW Drinking Water
NP Non-Potable Water
S Solid
CM Custody Maintained
CTU Custody Transfer Unbroken
CT Corrected Temperature

Reagent tracking is available upon request.

TCEQ LAB ID: T104704371

Aqua-Tech laboratories, Inc.
Austin: 3512 Montopolis Dr., Austin, TX 78744, 512.301.9559
Bryan: 635 Phil Gramm Blvd., Bryan, TX 77807, 979.778.3707
Test results meet all accreditation/certification requirements unless stated otherwise.

C-O-C # **H010266**
Page 1 of 1
rte_ATL COC 012723.rpt

Analyses Requested: "A" prefix indicates Austin, all others Bryan or Subcontracted, indicated by [SUB].
Name format: Analysis-Matrix-Technology-Method.

[NEL] = NELAP accredited parameter
[SUB] = NELAP accredited subcontracted parameter
[CNR] = No NELAP accreditation required or available
[INF] = Informational only (not NELAC certified)

By relinquishing the samples listed below to Aqua-Tech laboratories, Inc. (ATL), the client agrees to the following terms. Samples will be analyzed by a method that is within ATL's NELAP fields of accreditation (FoA). Analytes requiring an accredited method that is not within ATL's FoA will be subcontracted to a NELAP lab that is accredited for that method. Clients will be notified of the subcontract lab's details. Other analytes not requiring accreditation will be analyzed by a compendial method. If a specific method is required, the client will note the method in the "Analysis Requested" column. The client approves all method modifications documented by ATL or the subcontract lab.
A current list of ATL's NELAC fields of accreditation and other methods are available on request.

Comments:

- LAB RECEIPT - AQU1
Temperature - CT (C): 4 8
Preservation Correct: Yes
Post-Preservatives: N/A
Thermometer ID: 0715672
pH Paper ID: 0816272

Sample Custody

Relinquished (print & sign)	Jose A. Munoz	☑ Sampler ☐ Client ☐ ATL Field	Date 8/28/2024 Time 09:00 a.m	☑ Iced / Refrig ☐ Custody Sealed
Received (print & sign)	Brendan Bourland	☐ Client ☑ ATL Field	Date 8/28/24 Time 0920	☑ Iced / Refrig ☐ CM / CTU
Relinquished (print & sign)		☐ Client ☐ ATL Field	Date Time	☐ Iced / Refrig ☐ CM / CTU
Received (print & sign)	UPF 8637	☐ Client ☐ ATL Field	Date Time	☐ Iced / Refrig ☐ CM / CTU
Relinquished (print & sign)	Brendan Bourland	☐ Client ☑ ATL Field	Date 8/28/24 Time 1555	☑ Iced / Refrig ☑ CM / CTU / Sealed
Received (print & sign)	Brendan Bourland	X Lab	Date 8/28/24 Time 1555	X Cond Good X Iced / Refrig X CM / CTU

Field Sample ID	Start Date	Start Time	End Date	End Time	Composite Type	Sample Matrix	Container (Checked box indicates bottle arrived in lab) (Volume - Type - Preservative)	Lab ID
Lago Vista Cedar Breaks Soil 0-6 Inches	8/26/2024	13:00 p.m	8/26/2024	14:00 p.m	Comp	S	☑ A SOIL 0.5LP ☑ B SOIL TKN 0.25LP ☑ C SOIL TS 0.1L	**H010266-01**
Lago Vista Cedar Breaks Soil 6-18 Inches	8/26/2024	13:00 p.m	8/26/2024	14:00 p.m	Comp	S	☑ A SOIL 0.5LP ☑ B SOIL TKN 0.25LP ☑ C SOIL TS 0.1L	**H010266-02**
Lago Vista Cedar Breaks Soil 18-30 Inches	8/26/2024	13:00 p.m	8/26/2024	14:00 p.m	Comp	S	☑ A SOIL 0.5LP ☑ B SOIL TKN 0.25LP ☑ C SOIL TS 0.1L	**H010266-03**

A TS SL Grav SM2540 G [NEL]
K TAMU Plant Available Mehlich 3 CNR [SUB]
N Total TAMU CALC ENTRY [CNR]
NO3N TAMU Extractable Mehlich 3 CNR [SUB]
SUB pH SL TAMU (1:2) CNR [SUB]
Ca TAMU Plant Available Mehlich 3 CNR [SUB] [ANR]
Mg TAMU Plant Available Mehlich 3 CNR [SUB] [ANR]
Na TAMU Plant Available Mehlich 3 CNR [SUB] [ANR]
P TAMU Plant Available Mehlich 3 CNR [SUB]
TKN SL AUTO SM4500 NH3 G [CNR]
Cond SL (1:2) Probe TAMU CNR [SUB]
N Total SL PKG TAMU [CNR]
NH4 TAMU KCL extract CNR [SUB]
Solids, Dry Weight
Y Billing N Total Calc

Page 4 of 9 H010266_1 ATL 090124 FIN_Is 10 02 24 1740

Soil Analysis Report

Soil, Water and Forage Testing Laboratory
Department of Soil and Crop Sciences
2478 TAMU
College Station, TX 77843-2478
(979)321-5960

Visit our website: http://soiltesting.tamu.edu

Report generated for:
Aqua Tech Laboratories, Inc
635 Phil Gramm Blvd.
Bryan, TX 77807

Sample received on: 9/3/2024
Printed on: 9/11/2024
Area Represented: 79.6 acres
SWFTL recommends <40 acres/sample

Travis County
Laboratory Number: 667107
Customer Sample ID: H010266-01A
Crop Grown: TURF FAIRWAYS , ATHLETIC FIELDS , ETC.

Analysis	Results	CL*	Units	ExLow	VLow	Low	Mod	High	VHigh	Excess.	
pH	**7.5**	(6.2)	-	**Slightly Alkaline**							
Conductivity	**65**	(-)	umho/cm	**None**			CL*				**Fertilizer Recommended**
Nitrate-N	**2**	(-)	ppm**	I							**55** lbs N/acre
Phosphorus	**21**	(50)	ppm	IIII

Soil Analysis Report

Soil, Water and Forage Testing Laboratory
Department of Soil and Crop Sciences
2478 TAMU
College Station, TX 77843-2478
(979)321-5960

Visit our website: http://soiltesting.tamu.edu

Report generated for:
Aqua Tech Laboratories, Inc
635 Phil Gramm Blvd.
Bryan, TX 77807

Sample received on: 9/3/2024
Printed on: 9/11/2024
Area Represented: 79.6 acres
SWFTL recommends <40 acres/sample

Travis County
Laboratory Number: 667108
Customer Sample ID: H010266-02A
Crop Grown: TURF FAIRWAYS , ATHLETIC FIELDS , ETC.

Analysis	Results	CL*	Units	ExLow	VLow	Low	Mod	High	VHigh	Excess.	
pH	**7.5**	(6.2)	-	**Slightly Alkaline**							
Conductivity	**65**	(-)	umho/cm	**None**			CL*				**Fertilizer Recommended**
Nitrate-N	**3**	(-)	ppm**								**50** lbs N/acre
Phosphorus	**20**	(50)	ppm								**30** lbs P2O5/acre
Potassium	**103**	(160)	ppm								**50** lbs K20/acre
Calcium	**21,286**	(180)	ppm								**0** lbs Ca/acre
Magnesium	**263**	(50)	ppm								**0** lbs Mg/acre
Sulfur	**129**	(13)	ppm								**0** lbs S/acre
Sodium	**16**	(-)	ppm								
Iron											
Zinc											
Manganese											
Copper											
Boron											
Limestone Requirement											**0.00** tons 100ECCE/acre
Ammonium-N	**7.9**		ppm								

*CL=Critical level is the point which no additional nutrient (excluding nitrate-N, sodium and conductivity) is recommended. **ppm=mg/kg

Nitrogen: Apply suggested nitrogen rate and then apply 40 lbs/A of nitrogen every 4 to 6 weeks as needed.

Online fertilizer calculators to determine appropriate fertilizers and application rates.
http://soiltesting.tamu.edu

Methods: pH and conductivity/ 2:1; nitrate-N/Cd-red.; P, K, Ca, Mg, Na, and S/Mehlich 3 by ICP; Fe, Zn, Mn, and Cu/DTPA by ICP; and B/hot water by ICP.

ProAnalysisVer. 2.19j

Soil Analysis Report

Soil, Water and Forage Testing Laboratory
Department of Soil and Crop Sciences
2478 TAMU
College Station, TX 77843-2478
(979)321-5960

Visit our website: http://soiltesting.tamu.edu

Report generated for:
Aqua Tech Laboratories, Inc
635 Phil Gramm Blvd.
Bryan, TX 77807

Sample received on: 9/3/2024
Printed on: 9/11/2024
Area Represented: 79.6 acres
SWFTL recommends <40 acres/sample

Travis County
Laboratory Number: 667109
Customer Sample ID: H010266-03A
Crop Grown: TURF FAIRWAYS , ATHLETIC FIELDS , ETC.

Analysis	Results	CL*	Units	ExLow	VLow	Low	Mod	High	VHigh	Excess.	Fertilizer Recommended
pH	**7.6**	(6.2)	-	**Slightly Alkaline**							
Conductivity	**67**	(-)	umho/cm	**None**			CL*				
Nitrate-N	**3**	(-)	ppm**								**50** lbs N/acre
Phosphorus	**14**	(50)	ppm								**40** lbs P2O5/acre
Potassium	**97**	(160)	ppm								**55** lbs K20/acre
Calcium	**23,449**	(180)	ppm								**0** lbs Ca/acre
Magnesium	**252**	(50)	ppm								**0** lbs Mg/acre
Sulfur	**140**	(13)	ppm								**0** lbs S/acre
Sodium	**20**	(-)	ppm								
Iron											
Zinc											
Manganese											
Copper											
Boron											
Limestone Requirement											**0.00** tons 100ECCE/acre
Ammonium-N	**7.0**		ppm								

*CL=Critical level is the point which no additional nutrient (excluding nitrate-N, sodium and conductivity) is recommended. **ppm=mg/kg

Nitrogen: Apply suggested nitrogen rate and then apply 40 lbs/A of nitrogen every 4 to 6 weeks as needed.

Online fertilizer calculators to determine appropriate fertilizers and application rates.
http://soiltesting.tamu.edu

Methods: pH and conductivity/ 2:1; nitrate-N/Cd-red.; P, K, Ca, Mg, Na, and S/Mehlich 3 by ICP; Fe, Zn, Mn, and Cu/DTPA by ICP; and B/hot water by ICP.

ProAnalysisVer. 2.19j

AQUA-TECH LABORATORIES — Chain-of-Custody and Analysis Request

All analyses must be performed by a TNI approved method certified by the TCEQ. Contact ATL's sample custodian via voice and email if your methods do not meet this criteria.

SHIPPED TO

TAMU - Soil Lab
2610 F&B Road
College Station, TX 77845
Phone: (979) 845-4816

DEFINITIONS

P	Plastic
G	Glass
L	Liter
CM	Custody Maintained
CTU	Custody Transfer Unbroken
ATL	Aqua-Tech Laboratories, Inc

NELAP ACCREDITED TNI LABORATORY
T104704371

Aqua-Tech laboratories, Inc.

Austin: 3512 Montopolis Dr. Suite A, Austin, TX 78744, 512.301.9559
Bryan: 635 Phil Gramm Blvd., Bryan, TX 77807, 979.778.3707

Test results meet all accreditation/certification requirements unless stated otherwise.

C-O-C # 599 - H010266

sco_ATL TAMU 011921

Comments:

Please use Sample ID as PO# and email reports to reporting@aqua-techlabs.com.

Lines below document condition at receipt in lab (shipped to) listed above.

Cooler ID	Temp Read (C)	Corrected Temp (C)	Thermometer ID	Please hold coolers for pick-up.
901	AK7			
	MA			

Sample Custody

Relinquished (print & sign)	Aaron Guerrero	☐ Sampler ☐ Client ☑ ATL Field	Date 9-3-24 Time 11:57	☑ Iced / Refrig ☑ Custody Sealed
Received (print & sign)		☐ Client ☐ ATL Field	Date Time	☐ Iced / Refrig ☑ CM / CTU
Relinquished (print & sign)		☐ Client ☐ ATL Field	Date Time	☐ Iced / Refrig ☐ CM / CTU
Received (print & sign)	AK7 MA	☐ Client ☐ ATL Field	Date Time	☐ Iced / Refrig ☐ CM / CTU
Relinquished (print & sign)		☐ Client ☐ ATL Field	Date Time	☐ Iced / Refrig ☐ CM / CTU / Sealed
Received (print & sign)	John L Pitt [signature]	☑ Lab	Date 09/03/24 Time 11:57a	☑ Cond Good ☐ Iced / Refrig ☐ CM / CTU

Sample ID Sampled / Matrix	Analysis Request	(ATL indicates cooler number in parentheses for each container - only required if more than one cooler listed above.)	Lab ID
H010266-01 08/26/24 14:00 Soil	***Mehlich 3 - TAMU*** P Plant Available, NO3N Extractable, Na Plant Available Mg Plant Available, K Plant Available, Ca Plant Available ***TAMU - 1:2 Soil Extract*** pH, Conductivity (1:2) ***TAMU - KCl Extract*** NH4 - Ammonium	( ) H010266-01 [A] - SOIL 0.5LP	
H010266-02 08/26/24 14:00 Soil	***Mehlich 3 - TAMU*** P Plant Available, NO3N Extractable, Na Plant Available Mg Plant Available, K Plant Available, Ca Plant Available ***TAMU - 1:2 Soil Extract*** pH, Conductivity (1:2) ***TAMU - KCl Extract*** NH4 - Ammonium	( ) H010266-02 [A] - SOIL 0.5LP	

AQUA-TECH LABORATORIES, INC.

Chain-of-Custody and Analysis Request

C-O-C # 599 - H010266

SHIPPED TO: TAMU - Soil Lab

Sample ID Sampled / Matrix	Analysis Request	(ATL indicates cooler number in parentheses for each container - only required if more than one cooler listed above:)	Lab ID
H010266-03 08/26/24 14:00 Soil	***Mehlich 3 - TAMU*** P Plant Available / NO3N Extractable / Na Plant Available Mg Plant Available / K Plant Available / Ca Plant Available ***TAMU - 1:2 Soil Extract*** pH / Conductivity (1:2) ***TAMU - KCl Extract*** NH4 - Ammonium	( ) H010266-03 [A] - SOIL 0.5LP	

Page 9 of 9 H010266_1 ATL 090124 FIN_ls 10 02 24 1740

Attachment I

Tailwater Controls and Rainfall Runoff Controls

Tailwater Controls and Rainfall Runoff Controls

Golf Course (Turf):

Tailwater Control: Tailwater control is typically required for flood type irrigation methods to control runoff. Golf course turf irrigation applications are controlled and monitored. Runoff is also prevented by the short cycle times, typically less than 30 minutes per cycle with one cycle per day.

Runoff Control: Natural drainageways/topography and manmade ditches/berms prohibits runoff through the irrigation area.

Cedar Breaks (Cedar Trees):

Tailwater Control: Tailwater controls are not needed as the irrigation cycle is very short, approximately 15 minutes per cycle with one cycle day, and because the spray heads are located above the tree canopy only a small fraction of the sprayed irrigation water will hit the ground.

Runoff Control: Natural drainageways/topography prohibits runoff through the irrigation area.

Attachment J

Pollutant Analysis of Treated Effluent

email information for report date:
4/30/25 14:59

I011329

Lago Vista, City of

Attn: Chris Maxwell
chris.maxwell@lagovistatexas.gov

PO Box 4727
Lago Vista, TX 78645

Please contact us for your sampling needs or if you have any questions. Some convenient contacts are listed below. You can also access your results and reports through our ClientConnect ™ portal on our website (www.aqua-techlabs.com).

For sampling questions:

samplingbryan@aqua-techlabs.com (Bryan area)
samplingaustin@aqua-techlabs.com (Austin area)

reporting@aqua-techlabs.com (report questions)

Aqua-Tech values you as a customer and encourages you to speak with our staff at 979-778-3707 or the above emails if you have questions.

Thank you for your business,
June M. Brien
Executive Technical Director

BRYAN FACILITY
635 Phil Gramm Boulevard
Bryan, TX 77807
Phone: (979) 778-3707
Fax: (979) 778-3193

AQUA-TECH LABORATORIES

AUSTIN FACILITY
3512 Montopolis Dr. Suite A
Austin, TX 78744
Phone: (512) 301-9559
Fax: (512) 301-9552

The analyses summarized in this report were performed by Aqua-Tech Laboratories, Inc. unless otherwise noted. Aqua-Tech Laboratories, Inc. holds accreditation from the State of Texas in accordance with TNI and/or through the TCEQ Drinking Water Commercial Laboratory Approval Program.

The following abbreviations indicate certification status:

NEL	TNI accredited parameter.
ANR	Accreditation not offered by the State of Texas.
DWP	Approval through the TCEQ Drinking Water Commercial Laboratory Approval Program.
INF	Aqua-Tech Laboratories, Inc. is not accredited for this parameter. It is reported on an informational basis only.

Subcontracted data summarized in this report is indicated by "Sub" in the Lab column.

Certificate: TX-C24-00311

TCEQ Lab ID T104704371

General Definitions:

NR	Not Reported.
RPD	Relative Percent Difference.
% R	Percent Recovery.
dry	Results with the "dry" unit designation are reported on a "dry weight" basis.
SQL	The Sample Quantitation Limit is the value below which the parameter cannot reliably be detected. The SQL includes all sample preparations, dilutions and / or concentrations.
Adj MDL	The Adjusted Method Detection Limit is the MDL value adjusted for any sample dilutions or concentrations .
MDL	The Method Detection Limit is the lowest theoretical value that is statistically different from zero for a specific method, taking into account all preparation steps and instrument settings.

All samples are reported on an "as received" basis unless the designation "dry" is added to the reported unit.

Copies of Aqua-Tech Laboratories, Inc. procedures and individual sampling plans are available upon request. Note that samples are collected by Aqua-Tech Laboratories, Inc. personnel unless otherwise noted in the "Sample Collected" field of this report as "Client" or "CLT".

Samples included in this report were received in acceptable condition according to Aqua-Tech Laboratories, Inc. procedures and 40 CFR, Chapter I, Subchapter D, Part 136.3, TABLE II. - *Required containers, preservation techniques, and holding times*, unless otherwise noted in this report.

Record Retention:

All reports, raw data, and associated quality control data are kept on file for 10 years before being destroyed. Any client that would like copies of records must contact Aqua-Tech Laboratories, Inc. no later than six months prior to the scheduled disposal. An administrative fee for retrieval and distribution will apply.

This report was approved by:

June M. Brien, Technical Director

The results in this report apply only to the samples analyzed. This analytical report must be reproduced in its entirety unless written permission is granted by Aqua-Tech Laboratories, Inc.

BRYAN FACILITY
635 Phil Gramm Boulevard
Bryan, TX 77807
Phone: (979) 778-3707
Fax: (979) 778-3193

AQUA-TECH LABORATORIES

AUSTIN FACILITY
3512 Montopolis Dr. Suite A
Austin, TX 78744
Phone: (512) 301-9559
Fax: (512) 301-9552

Analytical Report

Lago Vista, City of

Report Printed: **4/30/25** **14:59**

I011329

Lago Vista WWTP Effluent Permit Renewal

Collected: 04/08/25 08:30 by CLIENT
Received: 04/08/25 10:13 by Hanna Garner

Type: Grab
Matrix: Non Potable
C-O-C #: I011329

Lab ID# I011329-01	Result	Units	Notes	MDL	Adj MDL	SQL	Lab	Analyzed	Method	Batch	
General Chemistry											
Carbonaceous BOD (5 day)	**<1**	mg/L		1	1	1	*Austin*	04/09/25 07:00 BAL	SM5210 B 2016	M191826	NEL
Total Suspended Solids	**1**	mg/L		1	1	1	*Austin*	04/09/25 10:30 KHA	SM2540 D 2015	M191860	NEL
Total Dissolved Solids	**514**	mg/L		25.0	50.0	50.0	*Austin*	04/10/25 10:09 CES	SM2540 C 2015	M191939	NEL
Ammonia as N	**1.67**	mg/L		0.05	0.05	0.05	*Bryan*	04/14/25 14:45 CTG	SM4500-NH3 G 2011	M192057	NEL
Total Kjeldahl Nitrogen as N	**1.75**	mg/L		0.13	0.13	0.20	*Bryan*	04/15/25 09:06 CTG	EPA 351.2 R2.0	M191991	NEL
Nitrate as N	**16**	mg/L			0.17	0.25	*Calc*	04/16/25 08:40 BEB	SM4500-NO3-F 2011	[CALC]	NEL
Nitrite as N	**2.3**	mg/L		0.002	0.05	0.25	*Austin*	04/08/25 15:48 BEB	SM4500 NO2- B 2011	M191817	NEL
Nitrate/Nitrite as N	**19**	mg/L		0.02	0.17	0.20	*Bryan*	04/16/25 08:40 CTG	SM4500-NO3-F 2011	M192214	NEL
Oil & Grease (HEM)	**<4.8**	mg/L		4.4	4.8	4.8	*Bryan*	04/15/25 10:13 HDH	EPA 1664B	M192117	NEL
Chloride	**138**	mg/L		0.72	2.90	20.0	*Austin*	04/14/25 10:00 MSA	SM4500-Cl- B 2011	M192072	NEL
Sulfate as SO4(2-)	**39.9**	mg/L		2.63	5.26	10.0	*Austin*	04/14/25 10:00 GTM	ASTM D516-16	M192078	NEL
Specific Conductance (adjusted to 25.0°C)	**934**	uS/cm		2.00	2.00	2.00	*Austin*	04/14/25 08:15 MSA	SM2510 B 2011	M192069	NEL
Metals (Total)											
Phosphorus (Total)	**8.60**	mg/L		0.082	0.041	0.050	*Austin*	04/11/25 15:10 BGB	EPA 200.7 R4.4	M191889	NEL

Explanation of Notes

SL-01 The dried residue did not yield between 2.5 and 200 mg as specified in the method. Due to holding time constraints or insufficient sample volume, the sample cannot be reanalyzed.

BRYAN FACILITY
635 Phil Gramm Boulevard
Bryan, TX 77807
Phone: (979) 778-3707
Fax: (979) 778-3193

AQUA-TECH LABORATORIES

AUSTIN FACILITY
3512 Montopolis Dr. Suite A
Austin, TX 78744
Phone: (512) 301-9559
Fax: (512) 301-9552

Analytical Report

Lago Vista, City of

Report Printed: **4/30/25** **14:59**

I011329

General Chemistry - Quality Control

	Result	Units	Notes	MDL	SQL	Analyzed	Spike Amount	Source Result	%R	%R Limits	RPD	RPD Limit	Batch	
Ammonia as N - SM4500-NH3 G 2011														*Bryan*
Initial Cal Check	0.90	mg/L				04/14/25 14:45 CTG	1.00		90.5	90 - 110			2504179	
Low Cal Check	0.06	mg/L				04/14/25 14:45 CTG	0.0500		112	70 - 130			2504179	
Blank	<0.05	mg/L		0.05	0.05	04/14/25 14:45 CTG							M192057	
LCS	0.49	mg/L		0.05	0.05	04/14/25 14:45 CTG	0.500		98.4	92.2 - 109			M192057	
LCS Dup	0.50	mg/L		0.05	0.05	04/14/25 14:45 CTG	0.500		100	92.2 - 109	2.01	4.99	M192057	
Matrix Spike	0.56	mg/L		0.05	0.05	04/14/25 14:45 CTG	0.500	0.08	97.8	85.9 - 120			M192057	
Matrix Spike Dup	0.56	mg/L		0.05	0.05	04/14/25 14:45 CTG	0.500	0.08	97.4	85.9 - 120	0.410	7.24	M192057	
Carbonaceous BOD (5 day) - SM5210 B 2016														*Austin*
Diln Water Blk	<0.20	mg/L		1	1	04/09/25 07:00 BAL		0.0		< or = 0.2 mg/L			2504116	
GGA	177	mg/L		1	1	04/09/25 07:00 BAL	198		89.4	84.6 - 115.4			2504116	
GGA	172	mg/L		1	1	04/09/25 07:00 BAL	198		86.9	84.6 - 115.4			2504116	
GGA	181	mg/L		1	1	04/09/25 07:00 BAL	198		91.4	84.6 - 115.4			2504116	
Seed Blank	<1	mg/L		1	1	04/09/25 07:00 BAL							2504116	
Seed Blank	<1	mg/L		1	1	04/09/25 07:00 BAL							2504116	
Seed Blank	<1	mg/L		1	1	04/09/25 07:00 BAL							2504116	
Duplicate	<1	mg/L		1	1	04/09/25 07:00 BAL		1				47.7	M191826	
Chloride - SM4500-Cl- B 2011														*Austin*
Initial Cal Check	49.3	mg/L				04/14/25 10:00 MSA	50.0		98.6	90 - 110			2504182	
Low Cal Check	5.11	mg/L				04/14/25 10:00 MSA	4.95		103	0 - 200			2504182	
Blank	<5.00	mg/L		0.72	5.00	04/14/25 10:00 MSA							M192072	
LCS	20.5	mg/L		0.72	5.00	04/14/25 10:00 MSA	19.8		103	99.4 - 108			M192072	
LCS Dup	20.5	mg/L		0.72	5.00	04/14/25 10:00 MSA	19.8		103	99.4 - 108	0.00	4.68	M192072	
Matrix Spike	208	mg/L		2.90	20.0	04/14/25 10:00 MSA	79.2	126	103	91.3 - 112			M192072	
Matrix Spike Dup	206	mg/L		2.90	20.0	04/14/25 10:00 MSA	79.2	126	101	91.3 - 112	2.30	3.99	M192072	
Nitrate/Nitrite as N - SM4500-NO3-F 2011														*Bryan*
Initial Cal Check	1.0	mg/L				04/16/25 08:40 CTG	0.959		107	90 - 110			2504224	
Interference Check A	2.0	mg/L				04/16/25 08:40 CTG	2.00		98.2	90 - 110			2504224	
Low Cal Check	0.01	mg/L				04/16/25 08:40 CTG	0.0200		70.0	70 - 130			2504224	
Blank	<0.02	mg/L		0.02	0.02	04/16/25 08:40 CTG							M192214	
LCS	0.54	mg/L		0.02	0.02	04/16/25 08:40 CTG	0.500		107	95.3 - 109			M192214	
LCS Dup	0.54	mg/L		0.02	0.02	04/16/25 08:40 CTG	0.500		108	95.3 - 109	0.559	3.37	M192214	
Matrix Spike	0.69	mg/L		0.02	0.02	04/16/25 08:40 CTG	0.500	0.12	115	86.6 - 122			M192214	
Matrix Spike Dup	0.70	mg/L		0.02	0.02	04/16/25 08:40 CTG	0.500	0.12	116	86.6 - 122	0.867	6.08	M192214	

BRYAN FACILITY
635 Phil Gramm Boulevard
Bryan, TX 77807
Phone: (979) 778-3707
Fax: (979) 778-3193

AQUA-TECH LABORATORIES

AUSTIN FACILITY
3512 Montopolis Dr. Suite A
Austin, TX 78744
Phone: (512) 301-9559
Fax: (512) 301-9552

Analytical Report

Lago Vista, City of

Report Printed: **4/30/25** **14:59**

I011329

General Chemistry - Quality Control

	Result	Units	Notes	MDL	SQL	Analyzed	Spike Amount	Source Result	%R	%R Limits	RPD	RPD Limit	Batch	
Nitrite as N - SM4500 NO2- B 2011														*Austin*
Initial Cal Check	0.08	mg/L				04/08/25 15:48 BEB	0.0740		107	90 - 110			2504113	
Low Cal Check	0.009	mg/L				04/08/25 15:48 BEB	0.0100		85.5	70 - 130			2504113	
Blank	<0.01	mg/L		0.002	0.01	04/08/25 15:48 BEB							M191817	
Filtered Blank	<0.01	mg/L		0.002	0.01	04/08/25 15:48 BEB							M191817	
LCS	0.08	mg/L		0.002	0.01	04/08/25 15:48 BEB	0.0800		99.5	90 - 110			M191817	
LCS Dup	0.08	mg/L		0.002	0.01	04/08/25 15:48 BEB	0.0800		102	90 - 110	2.25	6.76	M191817	
Matrix Spike	0.11	mg/L		0.002	0.01	04/08/25 15:48 BEB	0.0800	0.03	96.5	73.8 - 114			M191817	
Matrix Spike Dup	0.11	mg/L		0.002	0.01	04/08/25 15:48 BEB	0.0800	0.03	96.0	73.8 - 114	0.471	8.16	M191817	
Initial Cal Check	0.08	mg/L				10/04/24 08:45 MSA	0.0740		105	90 - 110			2410073	
Oil & Grease (HEM) - EPA 1664B														*Bryan*
Blank	<5.0	mg/L		5.0	5.0	04/15/25 10:13 HDH							M192117	
LCS	35.2	mg/L		5.2	5.2	04/15/25 10:13 HDH	41.7		84.4	78 - 114			M192117	
LCS Dup	36.3	mg/L		5.1	5.1	04/15/25 10:13 HDH	41.3		87.9	78 - 114	4.01	200	M192117	
Matrix Spike	34.5	mg/L		5.3	5.3	04/15/25 10:13 HDH	42.7	<5.3	80.7	78 - 114			M192117	
MRL Check	4.8	mg/L	*(4.8)*	5.1	5.1	04/15/25 10:13 HDH	5.13		92.8	70 - 130			M192117	
Specific Conductance (adjusted to 25.0°C) - SM2510 B 2011														*Austin*
ICV	527	uS/cm				04/14/25 08:15 MSA	515		102	90 - 110			2504180	
Blank	<2.00	uS/cm		2.00	2.00	04/14/25 08:15 MSA							M192069	
Duplicate	772	uS/cm		2.00	2.00	04/14/25 08:15 MSA		774			0.259	10	M192069	
LCS	1400	uS/cm		2.00	2.00	04/14/25 08:15 MSA	1410		99.5	90 - 110			M192069	
LCS Dup	1410	uS/cm		2.00	2.00	04/14/25 08:15 MSA	1410		99.7	90 - 110	0.214	10	M192069	
Sulfate as SO4(2-) - ASTM D516-16														*Austin*
Initial Cal Check	32.3	mg/L				04/14/25 10:00 GTM	30.0		108	90 - 110			2504188	
Low Cal Check	3.92	mg/L				04/14/25 10:00 GTM	5.00		78.4	70 - 130			2504188	
Blank	<5.00	mg/L		2.63	5.00	04/14/25 10:00 GTM							M192078	
Duplicate	125	mg/L		10.5	20.0	04/14/25 10:00 GTM		117			7.05	11.9	M192078	
LCS	8.69	mg/L		2.63	5.00	04/14/25 10:00 GTM	10.0		86.9	85 - 115			M192078	
LCS Dup	8.69	mg/L		2.63	5.00	04/14/25 10:00 GTM	10.0		86.9	85 - 115	0.00	13.8	M192078	
Matrix Spike	156	mg/L		10.5	20.0	04/14/25 10:00 GTM	40.0	117	98.4	61.6 - 137			M192078	
Matrix Spike Dup	151	mg/L		10.5	20.0	04/14/25 10:00 GTM	40.0	117	85.4	61.6 - 137	14.1	17.1	M192078	
Initial Cal Check	27.8	mg/L				09/13/24 09:10 BEB	30.0		92.7	90 - 110			2409181	

BRYAN FACILITY
635 Phil Gramm Boulevard
Bryan, TX 77807
Phone: (979) 778-3707
Fax: (979) 778-3193

AQUA-TECH LABORATORIES

AUSTIN FACILITY
3512 Montopolis Dr. Suite A
Austin, TX 78744
Phone: (512) 301-9559
Fax: (512) 301-9552

Analytical Report

Lago Vista, City of

Report Printed: **4/30/25** **14:59**

I011329

General Chemistry - Quality Control

	Result	Units	Notes	MDL	SQL	Analyzed	Spike Amount	Source Result	%R	%R Limits	RPD	RPD Limit	Batch	
Total Dissolved Solids - SM2540 C 2015														*Austin*
Blank	<25.0	mg/L		25.0	25.0	04/10/25 10:09 CES							M191939	
Duplicate	728	mg/L		50.0	50.0	04/10/25 10:09 CES		734			0.821	11.2	M191939	
Reference	524	mg/L		100	100	04/10/25 10:09 CES	502		104	66.5 - 140			M191939	
Total Kjeldahl Nitrogen as N - EPA 351.2 R2.0														*Bryan*
Initial Cal Check	3.73	mg/L				04/15/25 09:06 CTG	3.47		108	90 - 110			2504198	
Low Cal Check	0.21	mg/L				04/15/25 09:06 CTG	0.200		105	70 - 130			2504198	
Blank	<0.20	mg/L		0.13	0.20	04/15/25 09:06 CTG							M191991	
LCS	4.09	mg/L		0.13	0.20	04/15/25 09:06 CTG	4.00		102	96.8 - 112			M191991	
LCS Dup	4.21	mg/L		0.13	0.20	04/15/25 09:06 CTG	4.00		105	96.8 - 112	2.77	4.32	M191991	
Matrix Spike	175	mg/L		3.25	5.00	04/15/25 09:06 CTG	100	69.8	105	89.3 - 114			M191991	
Matrix Spike Dup	174	mg/L		3.25	5.00	04/15/25 09:06 CTG	100	69.8	104	89.3 - 114	0.906	11.2	M191991	
Total Suspended Solids - SM2540 D 2015														*Austin*
Blank	<1	mg/L		1	1	04/09/25 10:30 KHA							M191860	
Duplicate	1	mg/L	*SL-01*	1	1	04/09/25 10:30 KHA		1			17.4	20	M191860	
Reference	96	mg/L		10	10	04/09/25 10:30 KHA	102		94.1	80 - 120			M191860	

Metals (Total) - Quality Control

	Result	Units	Notes	MDL	SQL	Analyzed	Spike Amount	Source Result	%R	%R Limits	RPD	RPD Limit	Batch	
Phosphorus (Total) - EPA 200.7 R4.4														*Austin*
Blank	<0.050	mg/L		0.041	0.050	04/11/25 14:38 BGB							M191889	
LCS	2.41	mg/L		0.041	0.050	04/11/25 14:41 BGB	2.50		96.4	84.5 - 115.4			M191889	
LCS Dup	2.42	mg/L		0.041	0.050	04/11/25 14:43 BGB	2.50		96.6	84.5 - 115.4	0.187	20	M191889	
Duplicate	8.58	mg/L		0.041	0.050	04/11/25 14:45 BGB		8.60			0.349	20	M191889	
Matrix Spike	11.1	mg/L		0.041	0.050	04/11/25 14:48 BGB	2.50	8.60	98.6	69.5 - 130.4			M191889	

BRYAN FACILITY
635 Phil Gramm Boulevard
Bryan, TX 77807
Phone: (979) 778-3707
Fax: (979) 778-3193

AQUA-TECH LABORATORIES

AUSTIN FACILITY
3512 Montopolis Dr. Suite A
Austin, TX 78744
Phone: (512) 301-9559
Fax: (512) 301-9552

Analytical Report

Lago Vista, City of

Report Printed: **4/30/25** **14:59**

I011329

Sample Preparation Summary

Sample	Method	Prepared	Lab	Bottle	Initial	Units	Final	Units	External Dilution Factor	Batch
I011329-01										
Ammonia as N	SM4500-NH3 G 2011	4/14/25 7:32 CTG	Bryan	A	10.0	mL	10.0	mL	1	M192057
Carbonaceous BOD (5 day)	SM5210 B 2016	4/9/25 7:00 BAL	Austin	C	300	mL	300	mL	1	M191826
Chloride	SM4500-Cl- B 2011	4/14/25 10:00 MSA	Austin	D	25.0	mL	100	mL	1	M192072
Nitrate/Nitrite as N	SM4500-NO3-F 2011	4/16/25 7:27 CTG	Bryan	A	1.00	mL	10.0	mL	1	M192214
Nitrite as N	SM4500 NO2- B 2011	4/8/25 15:48 BEB	Austin	E	1.00	mL	25.0	mL	1	M191817
Oil & Grease (HEM)	EPA 1664B	4/15/25 10:13 HDH	Bryan	G	1040	mL	1000	mL	1	M192117
Phosphorus (Total)	EPA 200.7 R4.4	4/9/25 15:41 KT	Austin	I	50.0	mL	25.0	mL	1	M191889
Specific Conductance (adjusted to 25.0°C)	SM2510 B 2011	4/14/25 8:15 MSA	Austin	D	25.0	mL	25.0	mL	1	M192069
Sulfate as SO4(2-)	ASTM D516-16	4/14/25 10:00 GTM	Austin	D	50.0	mL	100	mL	1	M192078
Total Dissolved Solids	SM2540 C 2015	4/10/25 10:09 KHA	Austin	D	50.0	mL	100	mL	1	M191939
Total Kjeldahl Nitrogen as N	EPA 351.2 R2.0	4/11/25 7:39 AAM	Bryan	A	25.0	mL	25.0	mL	1	M191991
Total Suspended Solids	SM2540 D 2015	4/9/25 10:30 KHA	Austin	J	1000	mL	1000	mL	1	M191860

AQUA-TECH LABORATORIES, INC. — Chain-of-Custody and Analysis Request

Client / Project Name: Lago Vista, City of — Short New Permit List TCEQ-10054 July 06

Contact Information

Name	Chris Maxwell
Address	PO Box 4727
City	Lago Vista
State	TX Zip 78645
Phone	(512) 267-1155
email	

Definitions

DW	Drinking Water
NP	Non-Potable Water
S	Solid
CM	Custody Maintained
CTU	Custody Transfer Unbroken
CT	Corrected Temperature

Reagent tracking is available upon request.

TCEQ LAB ID: T104704371

Aqua-Tech laboratories, Inc.

Austin: 3512 Montopolis Dr., Austin, TX 78744, 512.301.9559
Bryan: 635 Phil Gramm Blvd., Bryan, TX 77807, 979.778.3707

Test results meet all accreditation/certification requirements unless stated otherwise.

C-O-C # **I011329**

Page 1 of 1

rte_ATL COC 012723.rpt

Analyses Requested: "A" prefix indicates Austin, all others Bryan or Subcontracted, indicated by [SUB].
Name format: Analysis-Matrix-Technology-Method.

[NEL] = NELAP accredited parameter
[SUB] = NELAP accredited subcontracted parameter
[CNR] = No NELAP accreditation required or available
[INF] = Informational only (not NELAC certified)

By relinquishing the samples listed below to Aqua-Tech laboratories, Inc. (ATL), the client agrees to the following terms. Samples will be analyzed by a method that is within ATL's NELAP fields of accreditation (FoA). Analytes requiring an accredited method that is not within ATL's FoA will be subcontracted to a NELAP lab that is accredited for that method. Clients will be notified of the subcontract lab's details. Other analytes not requiring accreditation will be analyzed by a compendial method. If a specific method is required, the client will note the method in the "Analysis Requested" column. The client approves all method modifications documented by ATL or the subcontract lab.
A current list of ATL's NELAC fields of accreditation and other methods are available on request.

Comments:

- LAB RECEIPT - CUT

Temperature - CT (C):	1.8/1.8
Preservation Correct:	Yes
Post-Preservatives:	NA
Thermometer ID:	07644SU
pH Paper ID:	08162T2

Sample Custody

Relinquished (print & sign)	Jace Maxwell	☑ Sampler ☑ Client ☐ ATL Field	Date 4/8/2025 ☑ Iced / Refrig Time 08:40 a.m. ☐ Custody Sealed
Received (print & sign)	Jeremy Twitchell	☒ Client ☐ ATL Field	Date 4/8/25 ☒ Iced / Refrig Time 8:40 ☐ CM / CTU
Relinquished (print & sign)	Jeremy Twitchell	☒ Client ☐ ATL Field	Date 4/8/25 ☒ Iced / Refrig Time 10:13 ☐ CM / CTU
Received (print & sign)	NEESHEE	☐ Client ☐ ATL Field	Date ☐ Iced / Refrig Time ☐ CM / CTU
Relinquished (print & sign)		☐ Client ☐ ATL Field	Date ☐ Iced / Refrig Time ☐ CM / CTU / Sealed
Received (print & sign)	Hanna Garner	X Lab	Date 4/8/25 X Cond Good Time 10:13 X Iced / Refrig X CM / CTU

Field Sample ID	Start Date	Start Time	End Date	End Time	Composite Type	Sample Matrix	Container (Checked box indicates bottle arrived in lab) (Volume - Type - Preservative)	Lab ID
Lago Vista WWTP Effluent Permit Renewal	4/8/2025	08:30 a.m.	- N/A -	- N/A -	Grab	NP	☑ A AMM NO3 TKN 0.25LP H2SO4 pH<2 ☑ B Mn Corr 0.25LP ☑ C CBOD 1LP ☑ D Cl Cond SO4 TDS 1LP ☑ E NO2 0.25LP ☑ F OG pH Chk - 1LP HCl pH<2 ☑ G OG - 1LG Amber HCl ☑ H OG - 1LG Amber HCl (MEESHEE) ☑ I P 0.25LP H2SO4 pH<2 ☑ J TSS 2LP	I011329-01

A (B) Field TRC Calc SM 4500 Cl F [NEL]
A Cond Probe SM 2510 B [NEL]
A Field Temp Probe SM2550 B [ANR]
A NO3N NP CALC SM4500 [NEL]
A TDS NP Grav SM2540 C [NEL]
NH3N NP AUTO SM 4500 G [NEL]
TKN NP AUTO EPA 351.2 [NEL]
A CBOD NP Probe SM 5210 B [NEL]
A E.Coli MPN SM9223 B [NEL]
A Field TRC TITR SM 4500 Cl F [DWP]
A P NP ICP EPA 200.7 [NEL]
A TSS NP Grav SM 2540 D [NEL]
NO3N + NO2N NP RFA SM4500 NO3 F [CNR]
A Cl NP Tit SM 4500 Cl- B [NEL]
A Field pH Probe SM45000-H+ B [ANR]
A NO2N NP Spec SM4500 NO2 B [NEL]
A SO4 NP Spec D516 [NEL]
Field TRC Mn TITR SM4500 Cl F [CNR]
O&G Grav EPA 1664B [NEL]

Page 7 of 7 I011329_1 ATL 090124 FIN_ls 04 30 25 1459

Attachment K

Influent Organic Strength

email information for report date:
4/6/25 11:07

I008885

Lago Vista, City of

Attn: Chris Maxwell
chris.maxwell@lagovistatexas.gov

PO Box 4727
Lago Vista, TX 78645

Please contact us for your sampling needs or if you have any questions. Some convenient contacts are listed below. You can also access your results and reports through our ClientConnect ™ portal on our website (www.aqua-techlabs.com).

For sampling questions:

samplingbryan@aqua-techlabs.com (Bryan area)
samplingaustin@aqua-techlabs.com (Austin area)

reporting@aqua-techlabs.com (report questions)

Aqua-Tech values you as a customer and encourages you to speak with our staff at 979-778-3707 or the above emails if you have questions.

Thank you for your business,
June M. Brien
Executive Technical Director

BRYAN FACILITY
635 Phil Gramm Boulevard
Bryan, TX 77807
Phone: (979) 778-3707
Fax: (979) 778-3193

AQUA-TECH LABORATORIES

AUSTIN FACILITY
3512 Montopolis Dr. Suite A
Austin, TX 78744
Phone: (512) 301-9559
Fax: (512) 301-9552

The analyses summarized in this report were performed by Aqua-Tech Laboratories, Inc. unless otherwise noted. Aqua-Tech Laboratories, Inc. holds accreditation from the State of Texas in accordance with TNI and/or through the TCEQ Drinking Water Commercial Laboratory Approval Program.

The following abbreviations indicate certification status:

NEL	TNI accredited parameter.
ANR	Accreditation not offered by the State of Texas.
DWP	Approval through the TCEQ Drinking Water Commercial Laboratory Approval Program.
INF	Aqua-Tech Laboratories, Inc. is not accredited for this parameter. It is reported on an informational basis only.

Subcontracted data summarized in this report is indicated by "Sub" in the Lab column.

Certificate: TX-C24-00311

TCEQ Lab ID T104704371

General Definitions:

NR	Not Reported.
RPD	Relative Percent Difference.
% R	Percent Recovery.
dry	Results with the "dry" unit designation are reported on a "dry weight" basis.
SQL	The Sample Quantitation Limit is the value below which the parameter cannot reliably be detected. The SQL includes all sample preparations, dilutions and / or concentrations.
Adj MDL	The Adjusted Method Detection Limit is the MDL value adjusted for any sample dilutions or concentrations .
MDL	The Method Detection Limit is the lowest theoretical value that is statistically different from zero for a specific method, taking into account all preparation steps and instrument settings.

All samples are reported on an "as received" basis unless the designation "dry" is added to the reported unit.

Copies of Aqua-Tech Laboratories, Inc. procedures and individual sampling plans are available upon request. Note that samples are collected by Aqua-Tech Laboratories, Inc. personnel unless otherwise noted in the "Sample Collected" field of this report as "Client" or "CLT".

Samples included in this report were received in acceptable condition according to Aqua-Tech Laboratories, Inc. procedures and 40 CFR, Chapter I, Subchapter D, Part 136.3, TABLE II. - *Required containers, preservation techniques, and holding times*, unless otherwise noted in this report.

Record Retention:

All reports, raw data, and associated quality control data are kept on file for 10 years before being destroyed. Any client that would like copies of records must contact Aqua-Tech Laboratories, Inc. no later than six months prior to the scheduled disposal. An administrative fee for retrieval and distribution will apply.

This report was approved by:

June M. Brien, Technical Director

The results in this report apply only to the samples analyzed. This analytical report must be reproduced in its entirety unless written permission is granted by Aqua-Tech Laboratories, Inc.

BRYAN FACILITY
635 Phil Gramm Boulevard
Bryan, TX 77807
Phone: (979) 778-3707
Fax: (979) 778-3193

AQUA-TECH LABORATORIES

AUSTIN FACILITY
3512 Montopolis Dr. Suite A
Austin, TX 78744
Phone: (512) 301-9559
Fax: (512) 301-9552

Analytical Report

Lago Vista, City of

Report Printed: **4/6/25** **11:07**

I008885

Lago Vista WWTP Influent

Collected: 03/18/25 16:00 by CLIENT
Received: 03/19/25 15:14 by Brendan Bourland

Type: 4 prt Comp
Matrix: Non Potable
C-O-C #: I008885

Lab ID# I008885-01

	Result	Units	Notes	MDL	Adj MDL	SQL	Lab	Analyzed	Method	Batch	
General Chemistry											
BOD (5 day)	**314**	mg/L		1	100	100	*Austin*	03/20/25 07:19 GTM	SM5210 B 2016	M190950	NEL

General Chemistry - Quality Control

	Result	Units	Notes	MDL	SQL	Analyzed	Spike Amount	Source Result	%R	%R Limits	RPD	RPD Limit	Batch	
BOD (5 day) - SM5210 B 2016														*Austin*
Diln Water Blk	<0.20	mg/L		1	1	03/20/25 06:43 GTM		0.0		< or = 0.2 mg/L			2503263	
GGA	197	mg/L		1	1	03/20/25 06:43 GTM	198		99.5	84.6 - 115.4			2503263	
GGA	221	mg/L		1	1	03/20/25 06:43 GTM	198		112	84.6 - 115.4			2503263	
GGA	218	mg/L		1	1	03/20/25 06:43 GTM	198		110	84.6 - 115.4			2503263	
GGA	223	mg/L		1	1	03/20/25 06:43 GTM	198		113	84.6 - 115.4			2503263	
Seed Blank	<1	mg/L		1	1	03/20/25 06:43 GTM							2503263	
Seed Blank	<1	mg/L		1	1	03/20/25 06:43 GTM							2503263	
Seed Blank	<1	mg/L		1	1	03/20/25 06:43 GTM							2503263	
Seed Blank	<1	mg/L		1	1	03/20/25 06:43 GTM							2503263	
Duplicate	311	mg/L		1	1	03/20/25 07:19 GTM		314			0.960	45.1	M190950	

Sample Preparation Summary

Sample	Method	Prepared	Lab	Bottle	Initial	Units	Final	Units	External Dilution Factor	Batch
I008885-01										
BOD (5 day)	SM5210 B 2016	3/20/25 7:19 BGB	Austin	A	3.00	mL	300	mL	1	M190950

Form: C:\ELMNT\FORMAT\ATL 090124 FIN_LS.RPT

Chain-of-Custody and Analysis Request

AQUA-TECH LABORATORIES, INC.

Client / Project Name: Lago Vista, City of — Lago Vista WWTP Influent

Contact Information
Name: Chris Maxwell
Address: PO Box 4727
City: Lago Vista
State: TX Zip: 78645
Phone: (512) 267-1155
email:

Definitions
DW Drinking Water
NP Non-Potable Water
S Solid
CM Custody Maintained
CTU Custody Transfer Unbroken
CT Corrected Temperature

Reagent tracking is available upon request.

TCEQ LAB ID: T104704371

Aqua-Tech laboratories, Inc.

Austin: 3512 Montopolis Dr., Austin, TX 78744, 512.301.9559
Bryan: 635 Phil Gramm Blvd., Bryan, TX 77807, 979.778.3707

Test results meet all accreditation/certification requirements unless stated otherwise.

C-O-C # **I008885**

Page 1 of 1

rte_ATL COC 012723.rpt

Analyses Requested: "A" prefix indicates Austin, all others Bryan or Subcontracted, indicated by [SUB].
Name format: Analysis-Matrix-Technology-Method.

[NEL] = NELAP accredited parameter
[SUB] = NELAP accredited subcontracted parameter
[CNR] = No NELAP accreditation required or available
[INF] = Informational only (not NELAC certified)

By relinquishing the samples listed below to Aqua-Tech laboratories, Inc. (ATL), the client agrees to the following terms. Samples will be analyzed by a method that is within ATL's NELAP fields of accreditation (FoA). Analytes requiring an accredited method that is not within ATL's FoA will be subcontracted to a NELAP lab that is accredited for that method. Clients will be notified of the subcontract lab's details. Other analytes not requiring accreditation will be analyzed by a compendial method. If a specific method is required, the client will note the method in the "Analysis Requested" column. The client approves all method modifications documented by ATL or the subcontract lab.
A current list of ATL's NELAC fields of accreditation and other methods are available on request.

Comments:

- LAB RECEIPT - Y012

Temperature - CT (C):	0.7
Preservation Correct:	Yes
Post-Preservatives:	N/A
Thermometer ID:	0837480
pH Paper iD:	0820913

ko_B COC MULTI 041720:rpt

Sample Custody

Relinquished (print & sign)	Jose N. Munoz [signature]	☐ Sampler ☑ Client ☐ ATL Field	Date 3/19/2025 ☑ Iced / Refrig Time 08:50 a.m. ☐ Custody Sealed
Received (print & sign)	Brandon Barnett [signature]	☐ Client ☑ ATL Field	Date 3/19/25 ☑ Iced / Refrig Time 0938 ☐ CM / CTU
Relinquished (print & sign)		☐ Client ☐ ATL Field	Date ☐ Iced / Refrig Time ☐ CM / CTU
Received (print & sign)	NPE CBGB7	☐ Client ☐ ATL Field	Date ☐ Iced / Refrig Time ☐ CM / CTU
Relinquished (print & sign)	Brendan Bourland [signature]	☐ Client ☑ ATL Field	Date 03/19/25 ☑ Iced / Refrig Time 15:14 ☑ CM / CTU / Sealed
Received (print & sign)	Brendan Bourland [signature]	X Lab	Date 03/19/25 X Cond Good Time 15:14 X Iced / Refrig X CM / CTU

Field Sample ID	Start Date	Start Time	End Date	End Time	Composite Type	Sample Matrix	Container (Checked box indicates bottle arrived in lab) (Volume - Type - Preservative)	Lab ID
Lago Vista WWTP Influent	3/18/2025	10:00 a.m.	3/18/2025	4:00 p.m.	4 part composite 10, 12, 2, 4:00	NP	☑ A BOD 0.25LP	I008885-01
A BOD NP Probe SM 5210 B [NEL]								

Page 3 of 3 I008885_1 ATL 090124 FIN_ls 04 06 25 1107

Attachment L

FEMA Maps

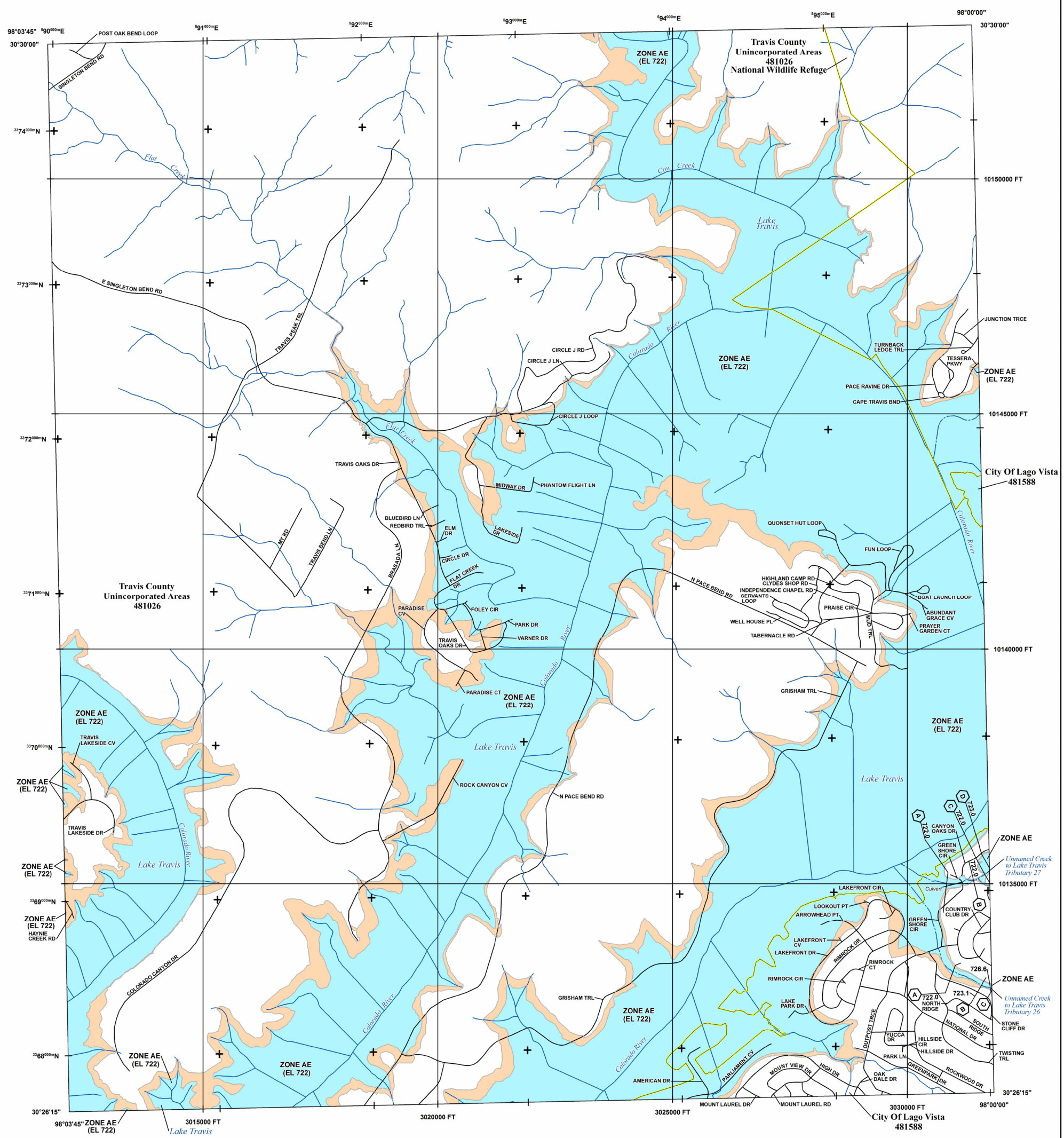

FLOOD HAZARD INFORMATION

SEE FIS REPORT FOR DETAILED LEGEND AND INDEX MAP FOR FIRM PANEL LAYOUT

THE INFORMATION DEPICTED ON THIS MAP AND SUPPORTING DOCUMENTATION ARE ALSO AVAILABLE IN DIGITAL FORMAT AT

HTTPS://MSC.FEMA.GOV

SPECIAL FLOOD HAZARD AREAS

- Without Base Flood Elevation (BFE) *Zone A,V, A99*
- With BFE or Depth *Zone AE, AO, AH, VE, AR*
- Regulatory Floodway

OTHER AREAS OF FLOOD HAZARD

- 0.2% Annual Chance Flood Hazard, Areas of 1% annual chance flood with average depth less than one foot or with drainage areas of less than one square mile *Zone X*
- Future Conditions 1% Annual Chance Flood Hazard *Zone X*
- Area with Reduced Flood Risk due to Levee See Notes. *Zone X*
- Area with Flood Risk due to Levee *Zone D*

OTHER AREAS

- NO SCREEN Area of Minimal Flood Hazard *Zone X*
- Area of Undetermined Flood Hazard *Zone D*

GENERAL STRUCTURES

- Channel, Culvert, or Storm Sewer
- Levee, Dike, or Floodwall

OTHER FEATURES

- E 18.2 / 17.5 Cross Sections with 1% Annual Chance Water Surface Elevation
- 8 Coastal Transect
- Coastal Transect Baseline
- Profile Baseline
- Hydrographic Feature
- 513 Base Flood Elevation Line (BFE)
- Limit of Study
- Jurisdiction Boundary

NOTES TO USERS

For information and questions about this Flood Insurance Rate Map (FIRM), available products associated with this FIRM, including historic versions, the current map date for each FIRM panel, how to order products, or the National Flood Insurance Program (NFIP) in general, please call the FEMA Map Information eXchange at 1-877-FEMA-MAP (1-877-336-2627) or visit the FEMA Flood Map Service Center website at https://msc.fema.gov. Available products may include previously issued Letters of Map Change, a Flood Insurance Study Report, and/or digital versions of this map. Many of these products can be ordered or obtained directly from the website.

Communities annexing land on adjacent FIRM panels must obtain a current copy of the adjacent panel as well as the current FIRM Index. These may be ordered directly from the Flood Map Service Center at the number listed above.

For community and countywide map dates refer to the Flood Insurance Study Report for this jurisdiction.

To determine if flood insurance is available in this community, contact your insurance agent or call the National Flood Insurance Program at 1-800-638-6620.

Base map information shown on this FIRM was derived from digital data obtained from City of Austin dated 2016, NFHL dated 2014, and CAPCOG dated 2014 and 2016.

SCALE

Map Projection:
State Plane Lambert Conformal Conic, Texas Central Zone FIPS 4203; North American Datum 1983; Western Hemisphere; Vertical Datum: NAVD 88

N

1 inch = 1,000 feet 1:12,000

0 1,000 2,000 4,000 feet

0 250 500 1,000 meters

PANEL LOCATOR

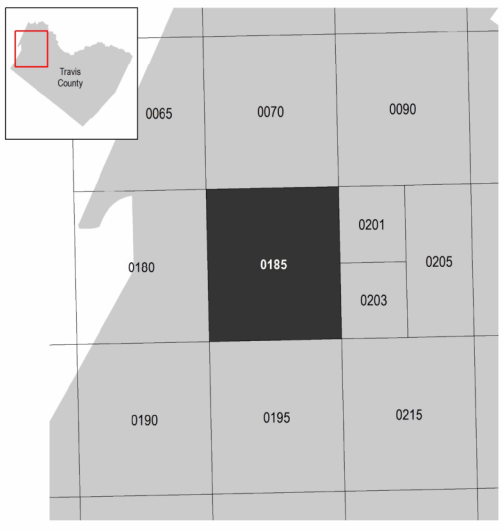

National Flood Insurance Program

NATIONAL FLOOD INSURANCE PROGRAM

FLOOD INSURANCE RATE MAP

TRAVIS COUNTY, TEXAS
and Incorporated Areas

PANEL 185 OF 730

FEMA

Panel Contains:

COMMUNITY	NUMBER	PANEL	SUFFIX
LAGO VISTA, CITY OF	481588	0185	J
TRAVIS COUNTY	481026	0185	J

VERSION NUMBER
2.3.3.3

MAP NUMBER
48453C0185J

MAP REVISED
JANUARY 22, 2020

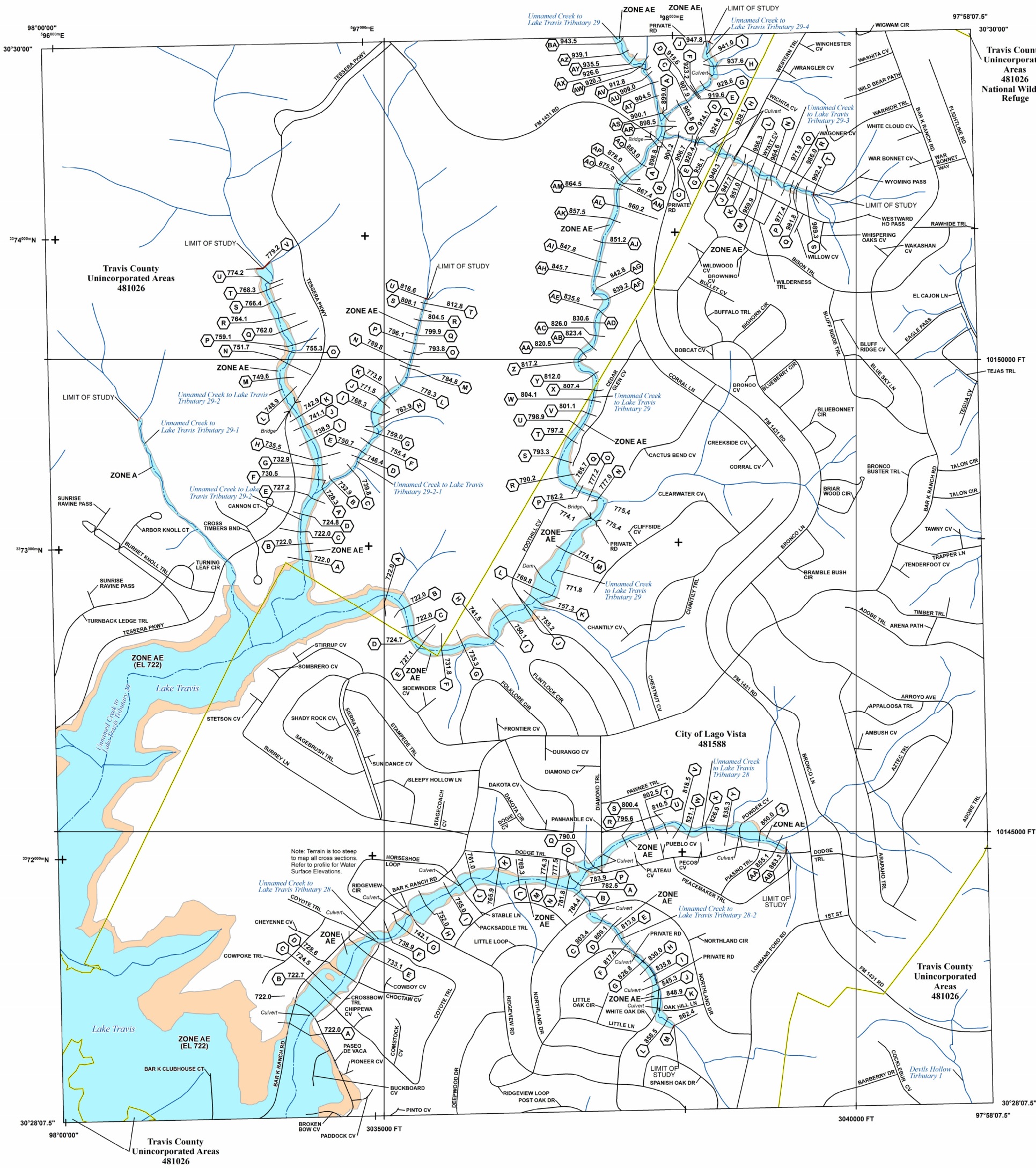

FLOOD HAZARD INFORMATION

SEE FIS REPORT FOR DETAILED LEGEND AND INDEX MAP FOR FIRM PANEL LAYOUT

THE INFORMATION DEPICTED ON THIS MAP AND SUPPORTING DOCUMENTATION ARE ALSO AVAILABLE IN DIGITAL FORMAT AT

HTTPS://MSC.FEMA.GOV

SPECIAL FLOOD HAZARD AREAS	Without Base Flood Elevation (BFE) *Zone A,V, A99*
	With BFE or Depth *Zone AE, AO, AH, VE, AR*
	Regulatory Floodway
OTHER AREAS OF FLOOD HAZARD	0.2% Annual Chance Flood Hazard, Areas of 1% annual chance flood with average depth less than one foot or with drainage areas of less than one square mile *Zone X*
	Future Conditions 1% Annual Chance Flood Hazard *Zone X*
	Area with Reduced Flood Risk due to Levee See Notes. *Zone X*
	Area with Flood Risk due to Levee *Zone D*
OTHER AREAS	NO SCREEN Area of Minimal Flood Hazard *Zone X*
	Area of Undetermined Flood Hazard *Zone D*
GENERAL STRUCTURES	Channel, Culvert, or Storm Sewer
	Levee, Dike, or Floodwall
OTHER FEATURES	E 18.2 / 17.5 Cross Sections with 1% Annual Chance Water Surface Elevation
	8 Coastal Transect
	Coastal Transect Baseline
	Profile Baseline
	Hydrographic Feature
	513 Base Flood Elevation Line (BFE)
	Limit of Study
	Jurisdiction Boundary

NOTES TO USERS

For information and questions about this Flood Insurance Rate Map (FIRM), available products associated with this FIRM, including historic versions, the current map date for each FIRM panel, how to order products, or the National Flood Insurance Program (NFIP) in general, please call the FEMA Map Information eXchange at 1-877-FEMA-MAP (1-877-336-2627) or visit the FEMA Flood Map Service Center website at https://msc.fema.gov. Available products may include previously issued Letters of Map Change, a Flood Insurance Study Report, and/or digital versions of this map. Many of these products can be ordered or obtained directly from the website.

Communities annexing land on adjacent FIRM panels must obtain a current copy of the adjacent panel as well as the current FIRM Index. These may be ordered directly from the Flood Map Service Center at the number listed above.

For community and countywide map dates refer to the Flood Insurance Study Report for this jurisdiction.

To determine if flood insurance is available in this community, contact your Insurance agent or call the National Flood Insurance Program at 1-800-638-6620.

Base map information shown on this FIRM was derived from digital data obtained from City of Austin dated 2016, NFHL dated 2014, and CAPCOG dated 2014 and 2016.

SCALE

N

Map Projection:
State Plane Lambert Conformal Conic, Texas Central Zone FIPS 4203; North American Datum 1983; Western Hemisphere; Vertical Datum: NAVD 88

1 inch = 500 feet 1:6,000

0 250 500 750 1,000 2,000 feet

0 125 250 500 meters

PANEL LOCATOR

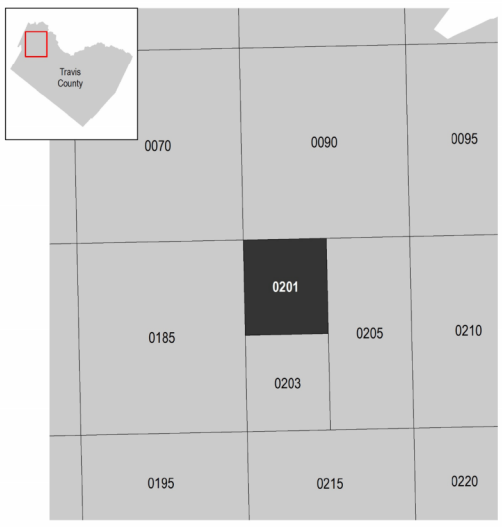

FEMA National Flood Insurance Program

NATIONAL FLOOD INSURANCE PROGRAM

FLOOD INSURANCE RATE MAP

TRAVIS COUNTY, TEXAS
and Incorporated Areas

PANEL 201 OF 730

FEMA

Panel Contains:

COMMUNITY	NUMBER	PANEL	SUFFIX
LAGO VISTA, CITY OF	481588	0201	J
TRAVIS COUNTY	481026	0201	J

VERSION NUMBER
2.3.3.3

MAP NUMBER
48453C0201J

MAP REVISED
JANUARY 22, 2020

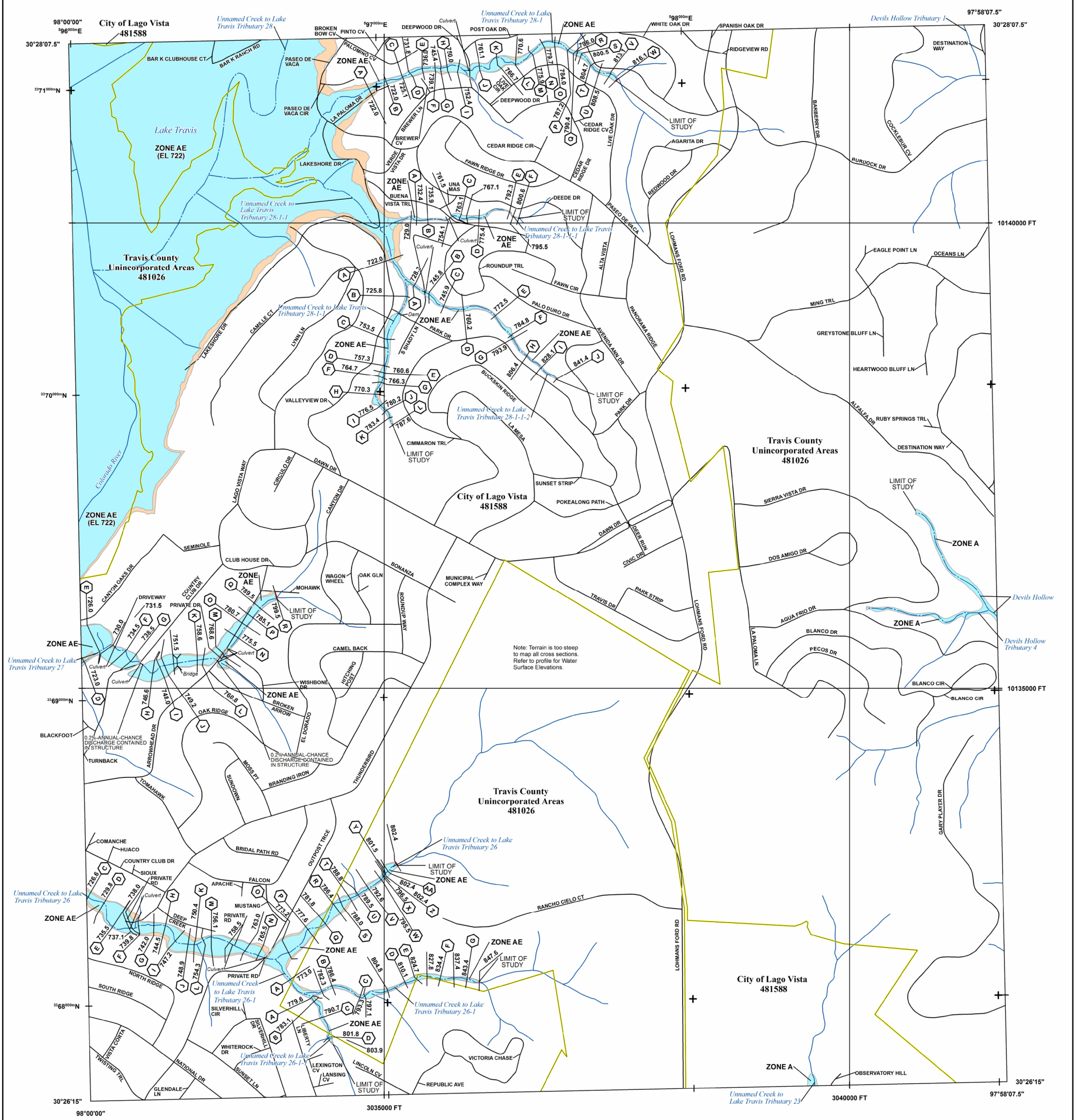

FLOOD HAZARD INFORMATION

SEE FIS REPORT FOR DETAILED LEGEND AND INDEX MAP FOR FIRM PANEL LAYOUT

THE INFORMATION DEPICTED ON THIS MAP AND SUPPORTING DOCUMENTATION ARE ALSO AVAILABLE IN DIGITAL FORMAT AT

HTTPS://MSC.FEMA.GOV

SPECIAL FLOOD HAZARD AREAS
- Without Base Flood Elevation (BFE) *Zone A,V, A99*
- With BFE or Depth *Zone AE, AO, AH, VE, AR*
- Regulatory Floodway

OTHER AREAS OF FLOOD HAZARD
- 0.2% Annual Chance Flood Hazard, Areas of 1% annual chance flood with average depth less than one foot or with drainage areas of less than one square mile *Zone X*
- Future Conditions 1% Annual Chance Flood Hazard *Zone X*
- Area with Reduced Flood Risk due to Levee See Notes. *Zone X*
- Area with Flood Risk due to Levee *Zone D*

OTHER AREAS
- NO SCREEN Area of Minimal Flood Hazard *Zone X*
- Area of Undetermined Flood Hazard *Zone D*

GENERAL STRUCTURES
- Channel, Culvert, or Storm Sewer
- Levee, Dike, or Floodwall

OTHER FEATURES
- E 18.2 / 17.5 Cross Sections with 1% Annual Chance Water Surface Elevation
- 8 Coastal Transect
- Coastal Transect Baseline
- Profile Baseline
- Hydrographic Feature
- 513 Base Flood Elevation Line (BFE)
- Limit of Study
- Jurisdiction Boundary

NOTES TO USERS

For information and questions about this Flood Insurance Rate Map (FIRM), available products associated with this FIRM, including historic versions, the current map date for each FIRM panel, how to order products, or the National Flood Insurance Program (NFIP) in general, please call the FEMA Map Information eXchange at 1-877-FEMA-MAP (1-877-336-2627) or visit the FEMA Flood Map Service Center website at https://msc.fema.gov. Available products may include previously issued Letters of Map Change, a Flood Insurance Study Report, and/or digital versions of this map. Many of these products can be ordered or obtained directly from the website.

Communities annexing land on adjacent FIRM panels must obtain a current copy of the adjacent panel as well as the current FIRM Index. These may be ordered directly from the Flood Map Service Center at the number listed above.

For community and countywide map dates refer to the Flood Insurance Study Report for this jurisdiction.

To determine if flood insurance is available in this community, contact your insurance agent or call the National Flood Insurance Program at 1-800-638-6620.

Base map information shown on this FIRM was derived from digital data obtained from City of Austin dated 2016, NFHL dated 2014, and CAPCOG dated 2014 and 2016.

SCALE

Map Projection:
State Plane Lambert Conformal Conic, Texas Central Zone FIPS 4203; North American Datum 1983; Western Hemisphere; Vertical Datum: NAVD 88

1 inch = 500 feet 1:6,000

0 250 500 750 1,000 2,000 feet

0 125 250 500 meters

PANEL LOCATOR

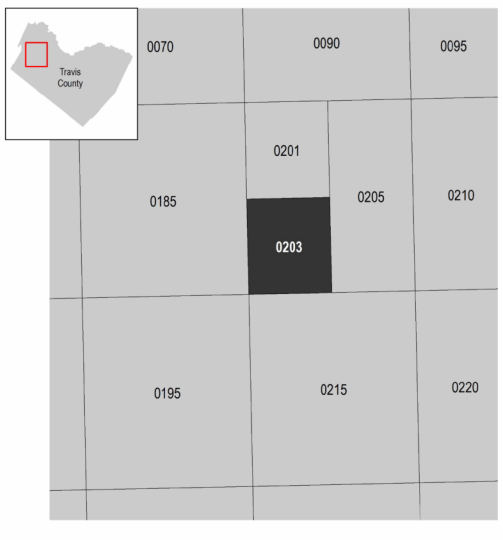

FEMA National Flood Insurance Program

NATIONAL FLOOD INSURANCE PROGRAM

FLOOD INSURANCE RATE MAP

TRAVIS COUNTY, TEXAS
and Incorporated Areas

PANEL 203 OF 730

Panel Contains:

COMMUNITY	NUMBER	PANEL	SUFFIX
LAGO VISTA, CITY OF	481588	0203	J
TRAVIS COUNTY	481026	0203	J

VERSION NUMBER
2.3.3.3

MAP NUMBER
48453C0203J

MAP REVISED
JANUARY 22, 2020

Attachment M

Sewage Sludge Management Plan

Sewage Sludge Management Plan

Influent Design Flow: 1.5 MGD

Influent BOD Concentration: 250 mg/L

Aerobic Digester Volume: 39,104 gallons

Aeration Basin MLSS: 2,000 to 3,000 mg/L

Table 1: Sludge Production

Solids Generated	100% Flow	75% Flow	50% Flow	25% Flow
Pounds of Influent BOD_5	3,128	2,346	1,564	782
Pounds of digested dry sludge produced*	1,095	821	552	274
Pounds of wet sludge produced	54,750	41,063	27,375	13,688
Gallons of wet sludge produced	6,560	4,920	3,280	1,640

***Assuming 0.35 pounds of digested dry sludge produced per pound of influent BOD_5 at average temperatures and 2.0% solids concentration in the digester.**

Sludge will be wasted from the RAS flow stream in the aerobic digester. Sludge solids will be stabilized in the digester; supernatant will be decanted from the digester and returned to the facility headworks for treatment.

Table 2: Sludge Removal Schedule

Solids Generated	100% Flow	75% Flow	50% Flow	25% Flow
Days between Sludge Removal	7	10	14	30

Liquid digested sludge will be removed from the digester for disposal on a regular basis as required. At 100% capacity, the annual average digested sludge production is 1,095 ppd. The digested sludge will be transported by a registered hauler, Wastewater Transport

Services LLC, Registration No. 24343 to JV Dirt + Loam Disposal Site, Permit No. 2310 in Travis County.

Attachment N

Ponds 2 and 14 Drawings

ISSUED FOR BID DESIGN DRAWINGS
FOR
EFFLUENT POND #17 REPAIRS AND POND #2 IMPROVEMENTS
CITY OF LAGO VISTA, TEXAS
NOVEMBER 2024

CITY OF
LAGO VISTA
TEXAS

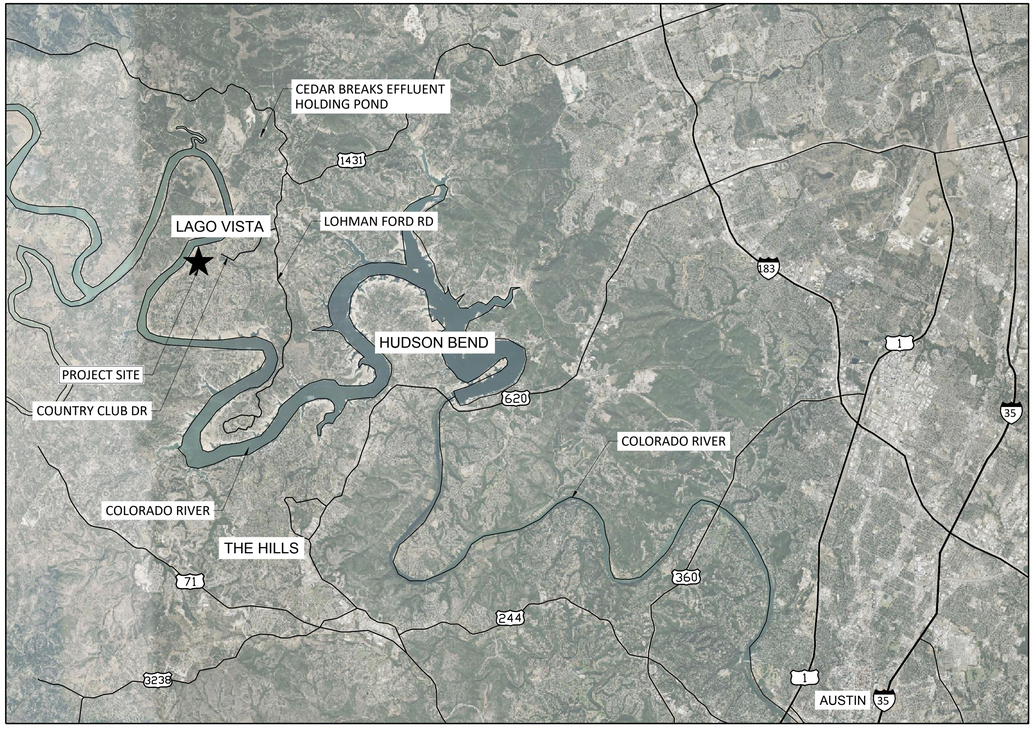

LOCATION MAP
1"=10,000'

SHEET INDEX	
Sheet Number	Sheet Title
GENERAL	
G-1	COVER SHEET
G-2	GENERAL NOTES
G-3	LEGEND, ABBREVIATIONS, AND MATERIAL NOTES
G-4	OVERALL PROJECT LAYOUT
CIVIL	
C-1	POND #2 EXISTING CONDITIONS
C-2	POND #2 UTILITY DEMOLITION PLAN
C-3	POND #2 DIMENSION CONTROL
C-4	POND #2 PROPOSED GRADING PLAN
C-5	POND #2 TYPICAL SECTIONS
C-6	POND #2 EMBANKMENT PLAN AND PROFILE
C-7	POND #2 EMBANKMENT CROSS SECTIONS
C-8	POND #2 UNDERDRAIN PLAN
C-9	POND #2 UNDERDRAIN PROFILE COLLECTOR DRAINS
C-10	POND #2 UNDERDRAIN PROFILE TOE DRAINS
C-11	POND #2 UNDERDRAIN PROFILE LATERAL DRAINS
C-12	POND #2 UNDERDRAIN DETAILS
C-13	GEOSYNTHETIC POND LINER DETAILS
C-14	POND #2 MISC. DETAILS 1 0F 2
C-15	POND #2 MISC. DETAILS 2 OF 2
C-16	POND #2 INTAKE STRUCTURE AND PIPE DETAILS
C-17	POND #2 EFFLUENT PIPELINE PLAN AND PROFILE
C-18	POND #2 STORM DRAIN PLAN AND PROFILE
C-19	POND #2 DRAINAGE DITCH PLAN AND PROFILE
C-20	POND #2 SWPPP
C-21	FENCE DETAILS
C-22	TRENCH DETAILS
C-23	POND #2 GEOTECHNICAL BORING PLAN AND PROFILE
C-24	POND #17 EXISTING CONDITIONS
C-25	POND #17 PROPOSED PLAN
C-26	POND #17 TYPICAL SECTIONS
C-27	POND #17 UNDERDRAIN REPAIR DETAILS
STRUCTURAL	
S-1	STRUCTURAL NOTES
S-2	MISCELLANEOUS SECTIONS AND DETAILS
S-3	MISC. CONCRETE REINFORCEMENT DETAILS
S-4	POND #17 CONCRETE REPAIR DETAILS
REFERENCE SHEETS FROM 1999 RECORD DRAWINGS (POND#17)	
R-1	EFFLUENT POND#17 EXISTING UNDERDRAIN PLAN
R-2	EFFLUENT POND #17 EXISTING PUMP STATION INFORMATION

APPROVED
By Taylor Whichard at 11:26 am, Nov 06, 2024

OWNER:
CITY OF LAGO VISTA
5803 THUNDERBIRD ST.
LAGO VISTA, TEXAS 78645
TELEPHONE: (512) 599-4179

CAUTION!!!
EXISTING UNDERGROUND UTILITIES IN THE AREA. CALL TEXAS 811 48 HOURS PRIOR TO CONSTRUCTION

FREESE AND NICHOLS
10431 Morado Circle, Suite 300
Austin, Texas 78759
Phone - (512) 617-3100
Web - www.freese.com

STATE OF TEXAS
BRYCE EARL TODD
145856
LICENSED
PROFESSIONAL ENGINEER
11/05/2024

GENERAL NOTES

1. THE FOLLOWING GENERAL NOTES APPLY TO ALL SHEETS OF THESE CONTRACT DOCUMENTS AS IF THEY WERE WRITTEN IN THEIR ENTIRETY ON EACH SHEET.
2. CONTRACTOR TO ADD THE ENGINEER OF RECORD (EOR) AND ANY SUBCONTRACTORS AS ADDITIONAL INSURED PARTIES.
3. COORDINATE ALL WORK WITH THE CITY OF LAGO VISTA'S CONSTRUCTION MANAGER.
4. CONTRACTOR SHALL BE RESPONSIBLE FOR OBTAINING ALL NECESSARY PERMITS, BONDS, AND INSURANCE PRIOR TO START OF CONSTRUCTION.
5. ALL CONSTRUCTION IS TO BE IN ACCORDANCE WITH THE CONTRACT DOCUMENTS. THE PROJECT IS SUBJECT TO INSPECTION BY CITY OF LAGO VISTA CONSTRUCTION MANAGER, PROJECT INSPECTOR, CITY OF LAGO VISTA STAFF, AND THE ENGINEER OF RECORD, AT ANY TIME.
6. STAGING AREA FOR CONTRACTOR'S USE AND ACCESS/ENTRY POINTS TO PROJECT SITE WILL BE CONTRACTOR'S RESPONSIBILITY TO SECURE. LOCATIONS SECURED SHALL BE COORDINATED WITH CITY OF LAGO VISTA CONSTRUCTION MANAGER PRIOR TO THE START OF CONSTRUCTION. SURROUNDING AREA AND ROADS ARE PRIVATE PROPERTY.
7. IN ACCORDANCE WITH THE TEXAS LAW, CONTRACTOR SHALL VERIFY LOCATIONS OF UNDERGROUND UTILITY LINES PRIOR TO COMMENCING CONSTRUCTION. CONTRACTOR SHALL NOTIFY TEXAS ONE CALL AT 800-245-4545, OR ANOTHER TEXAS REGISTERED NOTIFICATION CENTER, AT LEAST 48 HOURS BEFORE PROCEEDING WITH ANY EXCAVATION. CONTRACTOR SHALL IMMEDIATELY NOTIFY CITY OF LAGO VISTA CONSTRUCTION MANAGER OF ANY POTENTIAL CONFLICTS PRIOR TO COMMENCING EXCAVATION.
8. CONTRACTOR SHALL BE RESPONSIBLE FOR PROTECTING THE EXISTING STRUCTURES, GATES, UTILITIES, TREES, SHRUBS, FENCES, AND OTHER ADJOINING PROPERTIES THAT ARE OUTSIDE THE WORK LIMITS. ANY OF THESE ITEMS DAMAGED BY THE CONTRACTOR SHALL BE REPAIRED OR REPLACED- IN- KIND BY THE CONTRACTOR TO THE ORIGINAL OR BETTER CONDITION AT NO COST TO CITY OF LAGO VISTA.
9. CONTRACTOR SHALL COMPLY WITH ALL APPLICABLE OSHA RULES AND REGULATIONS THROUGHOUT THE PROJECT, INCLUDING BUT NOT LIMITED TO: PROVIDING ADEQUATE TEMPORARY SLOPE PROTECTION OR EARTH RETENTION SYSTEM (E.G., SHEET PILING, TRENCH BOX, EARTHEN DIKES, ETC.) NECESSARY TO PREVENT THE EXISTING LEVEE EMBANKMENTS FROM SLOUGHING DURING CONSTRUCTION OR DURING TRENCH EXCAVATION. THESE TEMPORARY MEASURES ARE TO BE SAFELY REMOVED WHEN CONSTRUCTION IS COMPLETED OR THE MEASURE HAS MET ITS INTENDED PURPOSE.
10. CONTRACTOR SHALL BE RESPONSIBLE FOR DAILY CLEAN-UP OF THE PROJECT SITE AND ALL ACCESS ROADS INCLUDING BUT NOT LIMITED TO: ALL PRIVATE, LOCAL, COUNTY, AND STATE ROADS USED AS CONSTRUCTION ROUTES. ALL DAMAGED ROADS, PARKING LOTS, STAGING AREAS, ETC. ARE TO BE RESTORED TO ORIGINAL OR BETTER CONDITION TO THE SATISFACTION OF CITY OF LAGO VISTA AND ALL PRIVATE, LOCAL, COUNTY, STATE, AND FEDERAL AGENCIES WHERE APPLICABLE.
11. CONTRACTOR SHALL BE RESPONSIBLE FOR PROVIDING MEASURES TO PROTECT THEIR PROPERTY, PERSONNEL, EQUIPMENT, WORK-IN-PROGRESS AND COMPLETED WORK THROUGHOUT THE PROJECT. ANY DAMAGE TO WORK-IN-PROGRESS AND/OR ANY COMPLETED WORK PRIOR TO PROJECT COMPLETION SHALL BE REPLACED ACCORDING TO THESE CONTRACT DOCUMENTS, AT NO COST TO CITY OF LAGO VISTA.
12. CLEARING PROJECT SITE USING FIRE OR CHEMICALS IS NOT ALLOWED.
13. NO FIREARMS SHALL BE PERMITTED ON THE PROJECT SITE.
14. THE GOLF COURSE WILL REMAIN OPEN DURING THE COURSE OF CONSTRUCTION. HOLE NUMBER 2 WILL HAVE A TEMPORARY GREEN INSTALLED FOR THE DURATION OF CONSTRUCTION. THE TEMPORARY GREEN WILL BE LOCATED NORTH OF POND #2. SEE SHEET G-4 FOR GREEN RELOCATION.
   14.a. HOLE NUMBER 2 CAN BE CLOSED FOR THE DURATION OF CONSTRUCTION AT THE REQUEST OF THE CONTRACTOR.
15. THE PROPOSED STAGING AREAS ARE PAVED WITH ASPHALT. CONTRACTOR SHALL RESTORE THE ASPHALT PAVING TO THE CONDITION PRIOR TO CONSTRUCTION AT NO ADDITIONAL EXPENSE TO THE CITY OF LAGO VISTA.
16. IF NECESSARY, CONTRACTOR IS RESPONSIBLE FOR SOURCING THEIR OWN BORROW MATERIAL.
17. CONTRACTOR SHALL HIRE AN INDEPENDENT 3RD PARTY CONSTRUCTION MATERIALS TESTING LAB. TESTING REQUIREMENTS AND STANDARDS ARE LISTED IN THE SPECIFICATIONS. ALL TESTING REPORTS SHALL BE MADE AVAILABLE TO THE EOR AND THE CITY OF LAGO VISTA.

STORMWATER POLLUTION PREVENTION PLAN

1. THE EROSION CONTROL PLAN PROVIDED IN THE PLAN SET (SHEET C-20) SHALL BE CONSIDERED THE MINIMUM EROSION CONTROL MEASURES FOR THE PROJECT. THE CONTRACTOR SHALL BE RESPONSIBLE FOR DEVELOPING A SWPPP IN ACCORDANCE WITH THE STATE AND LOCAL REGULATIONS.
2. THE CONTRACTOR SHALL CONTROL EROSION AND SEDIMENTATION PER APPLICABLE JURISDICTIONAL PERMITS, LAWS, REGULATIONS, AND STORM WATER PROTECTION AND POLLUTION PREVENTION (SWPPP) DETAILS.
3. CONTRACTOR SHALL MAINTAIN FLOW IN DRAINAGE DITCHES AND SWALES AT ALL TIMES AND PROVIDE TEMPORARY STRUCTURAL OR NON-STRUCTURAL SWPPP MEASURES THROUGHOUT THE PROJECT SITE AND PROJECT DURATION WHERE REQUIRED. METHODS USED BY CONTRACTOR TO MAINTAIN FLOW IN DITCHES AND PROVIDED SWPPP MEASURES MUST BE APPROVED BY THE CONSTRUCTION MANAGER, CITY OF LAGO VISTA, AND THE ENGINEER PRIOR TO INSTALLATION.
4. THE CONTRACTOR SHALL MINIMIZE TURBIDITY IN WATERWAYS DURING ALL PHASES OF THE PROJECT. THE CONTRACTOR SHALL EMPLOY METHODS TO ENSURE MINIMUM TURBIDITY FROM NEAR AND LONG-TERM EROSION FROM FILLS, AND SPOIL, AND DEVASTATED AREAS DURING AND FOLLOWING CONSTRUCTION.
5. THE CONTRACTOR SHALL NOT BE ALLOWED TO EXCAVATE POND/EMBANKMENT MATERIAL TO INSTALL EROSION AND SEDIMENT CONTROL MEASURES WITHOUT APPROVAL BY THE CONSTRUCTION MANAGER FOR THE CITY OF LAGO VISTA.

EMBANKMENT SLOPE PROTECTION NOTES

1. CONTRACTOR SHALL REMOVE AND SAFELY REUSE ALL EXISTING RIPRAP THAT IS WITHIN THE DEMOLITION LIMITS AS SHOWN IN THE RESPECTIVE SHEETS IN THIS PACKAGE. REUSE OF EXISTING RIPRAP SHALL BE IN COMPLIANCE WITH SPECIFICATION 31 37 00 (RIPRAP). CONTRACTOR SHALL COORDINATE WITH CITY OF LAGO VISTA'S CONSTRUCTION MANAGER ON LOCATIONS AT POND #2. WHERE THE RIPRAP SHALL BE BLENDED INTO THE EXISTING RIPRAP ALONG THE OUTSIDE SLOPE. THIS ALSO INCLUDES ANY OTHER AREA THAT WOULD AFFECT CONTRACTOR'S WORK (CANAL, SLOPES, DITCHES, ETC.). ALL OTHER RUBBLE (WOOD, TIRES, ETC) SHALL BE REMOVED FROM THE SITE. ALL MATERIALS IN THIS PROJECT SCHEDULED TO BE REMOVED, DEMOLISHED, AND/OR DISPOSED OF SHALL BECOME THE PROPERTY OF THE CONTRACTOR AND SHALL BE PROPERLY DISPOSED OF OFF SITE.
2. THE THICKNESS, LAYOUT, AND GRADING OF THE NEWLY PLACED ROCK RIPRAP SHALL RESEMBLE EXISTING CONDITIONS BEFORE DISTURBANCE.
3. RIPRAP GRADATION AND THE MINIMUM PERFORMANCE REQUIREMENT OF THE GEOTEXTILE FABRIC SHALL BE AS INDICATED IN THE CONSTRUCTION SPECIFICATIONS (SECTION 31 37 00 RIPRAP AND SECTION 31 32 19.15 GEOTEXTILE, RESPECTIVELY).
4. THE FOLLOWING NOTE APPLIES TO ALL WORK PERTAINING TO THE EXISTING EMBANKMENT.
   4a. EXISTING EMBANKMENT/LEVEES SHALL BE STRIPPED OF LOOSE SOILS AND VEGETATION. THE NEW/IMPROVED EMBANKMENT/LEVEE OR EMBANKMENT/LEVEE BACKFILL SHALL BE BENCHED INTO EXISTING EMBANKMENT/LEVEE. THE BENCHES SHALL BE FORMED BY CUTTING INTO THE EXISTING EMBANKMENT/LEVEE BY MAXIMUM OF 8 INCHES HIGH AND A MINIMUM OF 3' WIDE.
5. DEWATERING AND REMOVAL OF SEDIMENT AND OTHER WET MATERIALS WITHIN THE CONSTRUCTION LIMITS OF THE PONDS MAY BE REQUIRED.

CLEARING AND GRUBBING NOTES

1. CLEAR AND GRUB ALL AREAS WITHIN THE PROPOSED POND #2 LAYOUT AND WITHIN 10 FEET OF THE PROPOSED EMBANKMENT. THE USE OF THE CHEMICALS FOR CLEARING AND GRUBBING IS NOT ALLOWED. SEE SPECIFICATION 31 11 00.13.
2. ALL TREES AND VEGETATION LOCATED WITHIN AREAS RECEIVING EMBANKMENT FILL AND/OR RIPRAP SHALL BE REMOVED. ALL TREES DESIGNATED FOR REMOVAL SHALL BE CUT 2-3 FEET BELOW GRADE. THE ROOT BALL & BASE ROOTS SHALL BE MULCHED AND TREATED TO KILL THE ROOT SYSTEM. SEE TCEQ'S ACCEPTED LIST OF APPROVED PRODUCTS. HTTPS://WWW.TCEQ.TEXAS.GOV/ASSETS/PUBLIC/COMM_EXEC/PUBS/GI/GI357/GI-357.PDF. THE CONTRACTOR SHALL PLACE APPROVED EARTHFILL WITHIN VOID AND TO GRADE AND COMPACT PER REQUIREMENTS WITHIN THE PROJECT SPECIFICATIONS.

CONTROL OF WATER

1. CONTROL OF WATER FOR THE PURPOSES OF THESE CONTRACT DOCUMENTS MEANS:
   1.a. GROUNDWATER (PRESSURIZED OR STATIC)
   1.b. SURFACE WATER (PONDS, RESERVOIRS, CANALS, EXISTING CONDUITS, TEMPORARY CONDUITS)
   1.c. WAVES, SPLASHES, OR RUNUP FROM THE POND
   1.d. WATER RESULTING FROM METEOROLOGICAL EVENTS
2. GROUNDWATER LEVELS BELOW GROUND SURFACE ELEVATION (PRESSURIZED AND STATIC) AS WELL AS SURFACE WATER LEVELS CAN VARY. CONTRACTOR SHALL INCORPORATE ADEQUATE MEANS AND METHODOLOGIES TO ENSURE THAT WATER DOES NOT NEGATIVELY AFFECT THE FOUNDATION SOILS BENEATH THE FOUNDATION OF ANY STRUCTURE SHOWN ON THESE CONSTRUCTION DRAWINGS. 3" THICK MUD SLABS ARE REQUIRED AT FINAL EXCAVATED SUBGRADE BELOW CONCRETE STRUCTURES. CONTRACTOR SHALL EXCAVATE AS NECESSARY TO ENSURE THE PROPER ELEVATIONS OF THE STRUCTURES ARE MET. MUD SLABS WILL BE REQUIRED TO BE PLACED WITHIN 24 HOURS OF EXCAVATION FOR A GIVEN FOUNDATION.
3. CONTRACTOR SHALL REMOVE ANY TEMPORARY MEASURES EMPLOYED FOR CONSTRUCTION PURPOSES AFTER CONSTRUCTION (OR WHEN THE TEMPORARY MEASURE HAS FULFILLED ITS INTENDED PURPOSE).

SITE SECURITY

1. THE CONSTRUCTION SITE AT POND #2 SHALL BE PROTECTED WITH A TEMPORARY SECURITY FENCE, BUILT IN ACCORDANCE WITH CITY OF LAGO VISTA SPECIFICATIONS.

CONSTRUCTION SEQUENCING

1. BEFORE ANY OTHER WORK CAN BEGIN, THE CONTRACTOR SHALL COORDINATE WITH THE CITY OF LAGO VISTA TO TEST THE BYPASS PIPING SYSTEM SURROUNDING POND #17, WHICH SHOULD TRANSFER FLOW BETWEEN POND #17, POND #2, AND CEDAR BREAKS POND.
2. CONTRACTOR SHALL DRAIN ANY EFFLUENT WITHIN THE EXISTING 10" PRESSURIZED EFFLUENT FILL LINE FROM POND #17 INTO POND #2.
3. CONTRACTOR SHALL PUMP AND HAUL THE EFFLUENT WITHIN POND #2 TO POND # 17.
4. POND #2 MUST BE FUNCTIONAL BEFORE WORK AT POND #17 CAN BEGIN. THIS INCLUDES, BUT IS NOT LIMITED TO, THE COMPLETION OF THE UNDERDRAIN SYSTEM, UNDERDRAIN SUMP PIT, COMPACTION OF THE EMBANKMENT, INSTALLATION OF THE LINER SYSTEM, INSTALLATION OF THE LINER PROTECTION, INSTALLATION OF THE IRRIGATION INTAKE SYSTEM, AND INSTALLATION OF THE HEADWALL FOR THE EXISTING BYPASS PIPELINE.
5. DURING THE CONSTRUCTION OF POND #2, THE CITY OF LAGO VISTA WILL BEGIN DRAINING POND #17 BY UTILIZING THE BYPASS SYSTEM TO PUMP EFFLUENT TO THE CEDAR BREAKS EFFLUENT HOLDING POND. IF EFFLUENT STILL REMAINS IN POND #17 WHEN POND #2 BECOMES FUNCTIONAL, CONTRACTOR SHALL COORDINATE WITH THE CITY OF LAGO VISTA TO PUMP THE REMAINING EFFLUENT OUT OF POND #17 INTO THE SUBSTANTIALLY-COMPLETED POND #2. THE DRAIN RATE OF POND #17 SHALL NOT EXCEED 2 FEET OF ELEVATION PER HOUR. REMOVE AND DISPOSE OF SOLID WASTE REMAINING IN POND #17 AFTER IT HAS BEEN DRAINED.
6. WHEN FULLY DRAINED, THE CONTRACTOR SHALL PERFORM A CCTV INSPECTION OF THE UNDERDRAIN SYSTEM AT POND #17. CCTV VIDEO SHALL BE MADE AVAILABLE TO THE CITY OF LAGO VISTA AND EOR.
7. REMOVE AND DISPOSE OF THE EXISTING GEOSYNTHETIC LINER SYSTEM AT POND #17.
8. VISUALLY INSPECT THE CONDITION OF POND #17. A REPRESENTATIVE FROM THE CITY OF LAGO VISTA AND EOR SHALL BE PRESENT DURING THE INSPECTION.
9. IF NECESSARY, (DETERMINED BY THE CITY OF LAGO VISTA) PERFORM REPAIRS TO THE EXISTING UNDERDRAIN SYSTEM AT POND #17. IF REPAIRS ARE PERFORMED, CONDUCT A SECOND CCTV INSPECT TO ENSURE UNDERDRAIN PIPES WERE NOT DAMAGED DURING COMPACTION EFFORTS.
10. IF NECESSARY, (DETERMINED BY THE CITY OF LAGO VISTA) PERFORM REPAIRS TO THE EXISTING CONCRETE COLLAR/LAYER UNDERLYING THE EXISTING POND LINER SYSTEM AT POND #17.
11. INSTALL NEW LINER SYSTEM AT POND #17 IN ACCORDANCE WITH SHEET C-13.
12. INSTALL NEW LINER PROTECTION AT POND #17 IN ACCORDANCE WITH SHEET C-13.

LANDSCAPING PLAN

1. CONTRACTOR SHALL SUBMIT A LANDSCAPING PLAN TO THE CITY OF LAGO VISTA'S DIRECTOR OF PUBLIC WORKS AND DIRECTOR OF PARKS & RECREATION FOR REVIEW AND APPROVAL PRIOR TO THE START OF CONSTRUCTION. THIS PLAN SHALL, AT A MINIMUM, SHOW THE LOCATION OF ALL PROTECTED TREES, LOCATION OF ALL TREES TO BE REMOVED, AND PROPOSED LOCATIONS FOR REPLANTING AS REQUIRED BY THE TREE PRESERVATION ORDINANCE. THE DIRECTOR OF PUBLIC WORKS WILL OBTAIN THE NECESSARY TREE REMOVAL PERMIT BASED ON THIS PLAN.

ISSUED FOR BID

Freese and Nichols, Inc.
Texas Registered Engineering Firm F-2144
STATE OF TEXAS · 145856 · LICENSED PROFESSIONAL ENGINEER · 11/05/2024
FREESE NICHOLS
10431 Morado Circle, Suite 300
Austin, Texas 78759
Phone - (512) 617-3100
Web - www.freese.com

CITY OF LAGO VISTA
EFFLUENT POND #17 REPAIRS AND POND #2 IMPROVEMENTS
GENERAL
GENERAL NOTES

NO.	ISSUE	BY	DATE

F&N JOB NO. LGV23021
DATE 8/13/2024
DESIGNED BET
DRAWN MG
CHECKED JJG
APPROVED HGO
FILE NAME

VERIFY SCALE Bar is one inch on original drawing, if not one inch on this sheet, adjust scale. 0 1"

SHEET G-2
SEQ. 2 OF 37

ACAD Rel: 24.2s (LMS Tech)
Filename: N:\WRD\Drawings\GN-ALL-NOTES.dwg
Last Saved: 11/4/2024 4:20 PM Saved By: 08354
Plot Date: 11/4/2024 5:02 PM Plot By: 08354 Filename: N:\WRD\Drawings\GN-ALL-NOTES.dwg

LEGEND

SYMBOL	DESCRIPTION
	PIPE WIDTH & FLOWLINE
OE OE	OVERHEAD ELECTRIC
PL	PROPERTY LINE
	CONTROL POINT
	REBAR SET
	REBAR FOUND
	80D NAIL FOUND
	SIGN
	CONC. BOLLARD POST
	GUY WIRE ANCHOR
	UTILITY POLE
	FIRE HYDRANT
WW	SANITARY MANHOLE
WV	SANITARY VALVE
	TREE
	TREE TO BE REMOVED
W	WATER MANHOLE
W	WATER METER
W	WATER VALVE
500	EXISTING CONTOUR
500	PROPOSED CONTOUR
	HDPE GEOMEMBRANE
	GEOTEXTILE
	GEONET COMPOSITE WITH GEOTEXTLE BOTH SIDES
W	WATERLINE
LOC	LIMITS OF CONSTRUCTION
	SILT FENCE
	SLIT RAIL WIRE FENCE
	STAGING AREA
	RESTRICTED AREA
	DEMOLITION/CLEARING AND GRUBBING LIMITS
	CONCRETE
	FIBER-REINFORCED SHOTCRETE
	ZONE 1 COMPACTED EARTHFILL
	ZONE 2 COMPACTED EARTHFILL

	COMPACTED EARTH FILL AFTER ROCK EXCAVATION
	GRAVEL DRAIN
	FLEXIBLE BASE
	FLOWABLE FILL
	ROCK RIPRAP
	HDPE SYSTEM LINER (PLAN)
	EXTENTS OF BERMUDA GRASS SOD
	FILL SLOPE SYMBOL
	IN-SITU MATERIAL

ABBREVIATIONS

BLDG.	BUILDING
C/C	CENTER TO CENTER
CLR	CLEAR COVER
CMP	CORRUGATE METAL PIPE
CONT	CONTINUOUS
DWL	DOWEL
E/A	EDGE OF ASPHALT
EF	EACH FACE
EW	EACH WAY
FL	FLOW LINE
M/P	METAL PIPE (UNKNOWN)
NOM	NOMINAL
PRV	PRESSURE RELEASE VALVE
REINF	REINFORCEMENT
SS	STORM SEWER
STD	STANDARD
S/P	SANITARY PIPE
S/W	CONC. SIDEWALK
SS	STORM SEWER
T&B	TOP AND BOTTOM
TYP	TYPICAL
W/S	WALL (STONE)

MATERIAL AND COMPACTION SPECIFICATIONS

MATERIAL CLASSIFICATION	MATERIAL SOURCE	PLACEMENT LOCATION	LIQUID LIMIT	PLASTICITY INDEX	PERCENT PASSING NO 200	MAXIMUM LOOSE LIFT	MOISTURE DENSITY TEST	MINIMUM PERCENT COMPACTION	MOISTURE LIMITS
ZONE 1, CL OR CH	ON-SITE BORROW	EMBANKMENT INTERIOR SLOPE (SEE PLANS)	LL > 30	PI > 15	>50	8"	ASTM D698 A	95	0% TO +4%
ZONE 2, SC OR CL	ON-SITE BORROW	EMBANKMENT FILL (SEE PLANS)	LL > 30	PI > 10	>30	8"	ASTM D698 A	95	-1% TO +3%

1. ZONED EMBANKMENT MATERIALS SHALL BE FREE FROM ROOTS, TRASH, ORGANIC MATTER, AND OTHER OBJECTIONABLE OR DELETERIOUS MATERIALS.
2. ALL EMBANKMENT MATERIAL SHALL BE NON-DISPERSIVE.
3. IMPORTED FILL MAY BE NECESSARY TO ACHIEVE THESE REQUIREMENTS.

COARSE DRAINFILL GRADATION REQUIREMENTS

COARSE DRAINFILL		
ASTM C33 NO. 89 GRADATION		
SIEVE	MAX PASSING	MIN PASSING
1/2"	100	100
3/8"	100	90
NO. 4	55	20
NO. 8	30	5
NO. 16	10	0
NO. 50	5	0

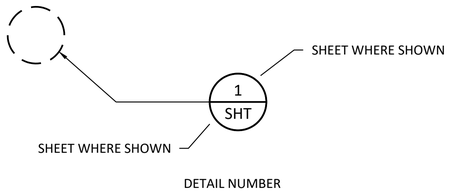

DETAIL NUMBER

NORTH ARROW

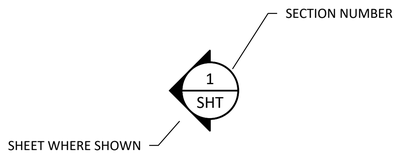

SECTION CUT

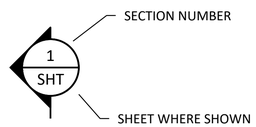

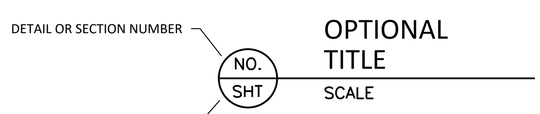

DETAIL OR SECTION TITLE

ISSUED FOR BID

Freese and Nichols, Inc.
Texas Registered Engineering Firm F-2144

FREESE NICHOLS
10431 Morado Circle, Suite 300
Austin, Texas 78759
Phone - (512) 617-3100
Web - www.freese.com

CITY OF LAGO VISTA
EFFLUENT POND #17 REPAIRS AND
POND #2 IMPROVEMENTS
GENERAL
LEGEND, ABBREVIATIONS, AND MATERIAL NOTES

F&N JOB NO.	LGV23021
DATE	8/13/2024
DESIGNED	BET
DRAWN	MG
CHECKED	JJG
APPROVED	HGO

NO.	ISSUE	BY	DATE	FILE NAME

VERIFY SCALE Bar is one inch on original drawing. If not one inch on this sheet, adjust scale.
0 1

SHEET G-3
SEQ. 3 OF 37

ACAD Rel: 24.2s (LMS Tech)
Filename: N:\WRD\Drawings\GN-LEGEND.dwg
Last Saved: 8/2/2024 9:59 AM Saved By: 02945

Plot Date: 8/13/2024 1:08 PM Plot By: 02945 Filename: N:\WRD\Drawings\GN-LEGEND.dwg

ISSUED FOR BID

Freese and Nichols, Inc.
Texas Registered Engineering Firm F-2144

STATE OF TEXAS
BRYCE EARL TODD
145856
LICENSED
PROFESSIONAL ENGINEER
08/13/2024

FREESE AND NICHOLS
10431 Morado Circle, Suite 300
Austin, Texas 78759
Phone - (512) 617-3100
Web - www.freese.com

CITY OF LAGO VISTA
EFLLUENT POND #17 REPAIRS AND
POND #2 IMPROVEMENTS
GENERAL
OVERALL PROJECT LAYOUT

NO.	ISSUE	BY	DATE

F&N JOB NO. LGV23021
DATE 8/13/2024
DESIGNED BET
DRAWN MG
CHECKED JJG
APPROVED HGO
FILE NAME

VERIFY SCALE 0 1
Bar is one inch on original drawing. If not one inch on this sheet, adjust scale.

SHEET G-4
SEQ. 4 OF 37

ACAD Rel: 24.2s (LMS Tech)
Filename: N:\WRD\Drawings\GN-OVALL-LAYOUT.dwg
Last Saved: 7/19/2024 4:16 PM Saved By: 03675

Plot Date: 8/13/2024 1:08 PM Plot By: 02945 Filename: N:\WRD\Drawings\GN-OVALL-LAYOUT.dwg

NOTES:

1. THE LOCATIONS OF THE UTILITIES SHOWN ON THESE PLANS DOES NOT RELIEVE THE CONTRACTOR FROM THE DUTY TO COMPLY WITH APPLICABLE UTILITY DAMAGE PREVENTION LAWS AND REGULATIONS, INCLUDING, BUT NOT LIMITED TO, GIVING NOTIFICATION TO UTILITY OWNER'S "ONE-CALL" CENTER BEFORE EXCAVATION.
2. SURVEYOR FOUND WATER FEATURES ON THE NORTH SIDE OF POND #2. WHEN ATTEMPTING TO TRANSMIT AN ELECTROMAGNETIC SIGNAL THROUGH THE WATER LINES ASSOCIATED WITH THESE FEATURES, SURVEYOR WAS UNABLE TO DO SO. THE APPROXIMATE LOCATION OF THE UTILITY HAS BEEN DEPICTED.
3. NO RECORD DATA IS AVAILABLE FORT THE 12" STORM SEWER PIPE. CONTRACTOR SHALL FIELD VERIFY IF THIS PIPE EXISTS AND IF SO, REMOVE IN ITS ENTIRETY INCLUDING BUT NOT LIMITED TO PIPE SECTIONS, HEADWALL OR STRUCTURE IN THE POND, PIPE FITTINGS, BEDDING MATERIAL, ETC. BACKFILL WITH COMPACTED FILL ACCORDING TO SPECIFICATION 31 05 13 SOILS FOR EARTHWORK AND 35 73 13.16 COMPACTED FILL.
4. ALL TREES ON THE EXISTING EMBANKMENT AND WITHIN 10 FEET OF THE NEW EMBANKMENT SHALL BE REMOVED. SEE CLEARING AND GRUBBING NOTES ON SHEET G-2.

CONTROL POINT TABLE (GRID)				
POINT ID	DESCRIPTION	NORTHING	EASTING	ELEVATION
1	5/8" REBAR W/ ALUMINUM CAP SET	10131414.8420	3029169.5920	736.9700
2	5/8" REBAR W/ ALUMINUM CAP SET	10131546.1900	3029147.9480	739.9410

FAIRWAY OF HOLE #2
SEE SHEET C-2 INFORMATION ABOUT UTILITIES AT THE NORTH SIDE OF POND #2
CAUTION! OVERHEAD ELECTRIC LINE
OUTPOST TRACE
EXISTING STORM SEWER MANHOLE TO BE REMOVED
RIM ELEV: 711.05'
WEST 12": 707.37'
SOUTHEAST 12": 707.21'
PID 175634
153.65 ACRES
CITY OF LAGO VISTA
DOC. NO. 2008117726
O.P.R.T.C.TX.
TREE TO BE REMOVED (TYPICAL)
12" CMP
FL = 708.90'
OTHER END OF CMP OUTSIDE LIMITS OF SURVEY AND CONSTRUCTION
SEE NOTE 2
PARK CIRCLE
12" CMP
FL = 736.30'
N: 10131433.52
E: 3029112.25
EXISTING WATER VALVES TO REMAIN
EDGE OF ASPHALT
POND #2
EXISTING 12" STORM DRAIN TO BE REMOVED SEE NOTE 3
N: 10131466.91
E: 3028986.41
RESTRICTED AREA
EXISTING 8" SANITARY LINE TO REMAIN
N: 10131337.78
E: 3028962.40
12" CMP
FL = 736.81'
EXISTING 18" STORM DRAIN TO BE REMOVED
EDGE OF ASPHALT
FLOW
STORM DRAIN INLET TO REMAIN
RIM ELEV: 717.94'
NORTHWEST 12": 714.96'
EXISTING ROCK RIPRAP
EXISTING DOUBLE BARREL CULVERT
N: 10131303.44
E: 3029082.98
2" PRV
SAND TRAP
TREE TO REMAIN (TYPICAL)
EXISTING DRAINAGE FLOW PATH
GREEN OF HOLE #3
TEE BOXES OF HOLE #3
CAUTION! OVERHEAD ELECTRIC LINE
12" CMP
FL = 734.04'
REMOVE EXISTING ROCK RIPRAP NECESSARY FOR CLEARING AND GRUBBING AND PROPOSED WORK. STOCKPILE FOR REUSE AT THE PROPOSED EMBANKMENT
24" CMP
FL = 734.22'
EXISTING CART PATH
SAND TRAP
36" CMP
FL = 723.86'
12" CMP
FL = 734.49'
24" CMP
FL = 734.44'
EXISTING 36" CULVERT

PID PID 173585
LOT 1784
COUNTRY CLUB ESTATES SEC 8
JOHN & GWENDOLYN S DIEHL
DOC. NO. 2014035970
O.P.R.T.C.TX.

PID 173584
LOT 1785A
COUNTRY CLUB ESTATES SEC 8
AMENDED PLAT OF LTS 1785&1786
JASON & TONI MICHELLE RAGER
NO. 2021139117
O.P.R.T.C.TX.

PID PID 173582
LOT 1787
COUNTRY CLUB ESTATES
SEC 8

NORTH
0 40' 80'
SCALE IN FEET

ISSUED FOR BID

Freese and Nichols, Inc.
Texas Registered Engineering Firm F-2144

STATE OF TEXAS
BRYCE EARL LOVELL
145856
LICENSED PROFESSIONAL ENGINEER
08/13/2024

FREESE NICHOLS
10431 Morado Circle, Suite 300
Austin, Texas 78759
Phone - (512) 617-3100
Web - www.freese.com

CITY OF LAGO VISTA
EFFLUENT POND #17 REPAIRS AND POND #2 IMPROVEMENTS
CIVIL
POND #2 EXISTING CONDITIONS

NO.	ISSUE	BY	DATE

F&N JOB NO. LGV23021
DATE 8/13/2024
DESIGNED BET
DRAWN MG
CHECKED JJG
APPROVED HGO
FILE NAME

VERIFY SCALE Bar is one inch on original drawing. If not one inch on this sheet, adjust scale.
0 1"

SHEET C-1
SEQ. 5 OF 37

ACAD Rel: 24.2s (LMS Tech)
Filename: N:\WRD\Drawings\CV-PD2-EX-COND.dwg
Last Saved: 6/14/2024 10:23 AM Saved By: 02945
Plot Date: 8/13/2024 1:08 PM Plot By: 02945 Filename: N:\WRD\Drawings\CV-PD2-EX-COND.dwg

NOTES:

1. SURVEY FIELD CREW LOCATED A STORM LINE NEAR THE CONTROL HOUSE ON THE NORTHWEST SIDE OF POND #2. IT IS ASSUMED THAT THIS STORM LINE CONNECTS TO A NEARBY STORM DRAIN INLET THAT COULD NOT BE ACCESSED. BECAUSE THE STRUCTURE WAS NOT ACCESSIBLE, SURVEYOR WAS UNABLE TO DOCUMENT THE STRUCTURE'S FLOW LINES.
2. THE EXISTING CONCRETE HEADWALL FOR THE 16" CMP CULVERT IS TO REMAIN. CONTRACTOR SHALL EXERCISE CAUTION WHEN EXCAVATING NEAR THIS STRUCTURE IN ORDER TO REUSE FOR PROPOSED CONDITIONS. THE EXISTING 16" CMP CULVERT AND CONCRETE SLOPE PAVING ARE TO BE REMOVED AND REPLACED.
3. THE 8" SANITARY LINE IS DRAWN ACCORDING TO RECORD DATA. NO ELECTRONIC INFORMATION WAS OBTAINED IN THE FIELD. FLOW LINE ELEVATIONS, IF THE PIPE REMAINS, ARE UNKNOWN.
4. THE EXISTING 10" PVC LINE IS PRESSURIZED AND ACTIVE. COORDINATE WITH THE CITY OF LAGO VISTA TO DEPRESSURIZE THE LINE. DRAIN THE LINE AS MUCH IS NECESSARY TO PERFORM THE PROPOSED WORK. HAUL ANY DISCHARGED EFFLUENT TO POND #17. CUT THE LINE AT THE DISTANCE NECESSARY TO PERFORM THE PROPOSED WORK. SEE SHEET C-17 FOR PROPOSE4D CONDITIONS.

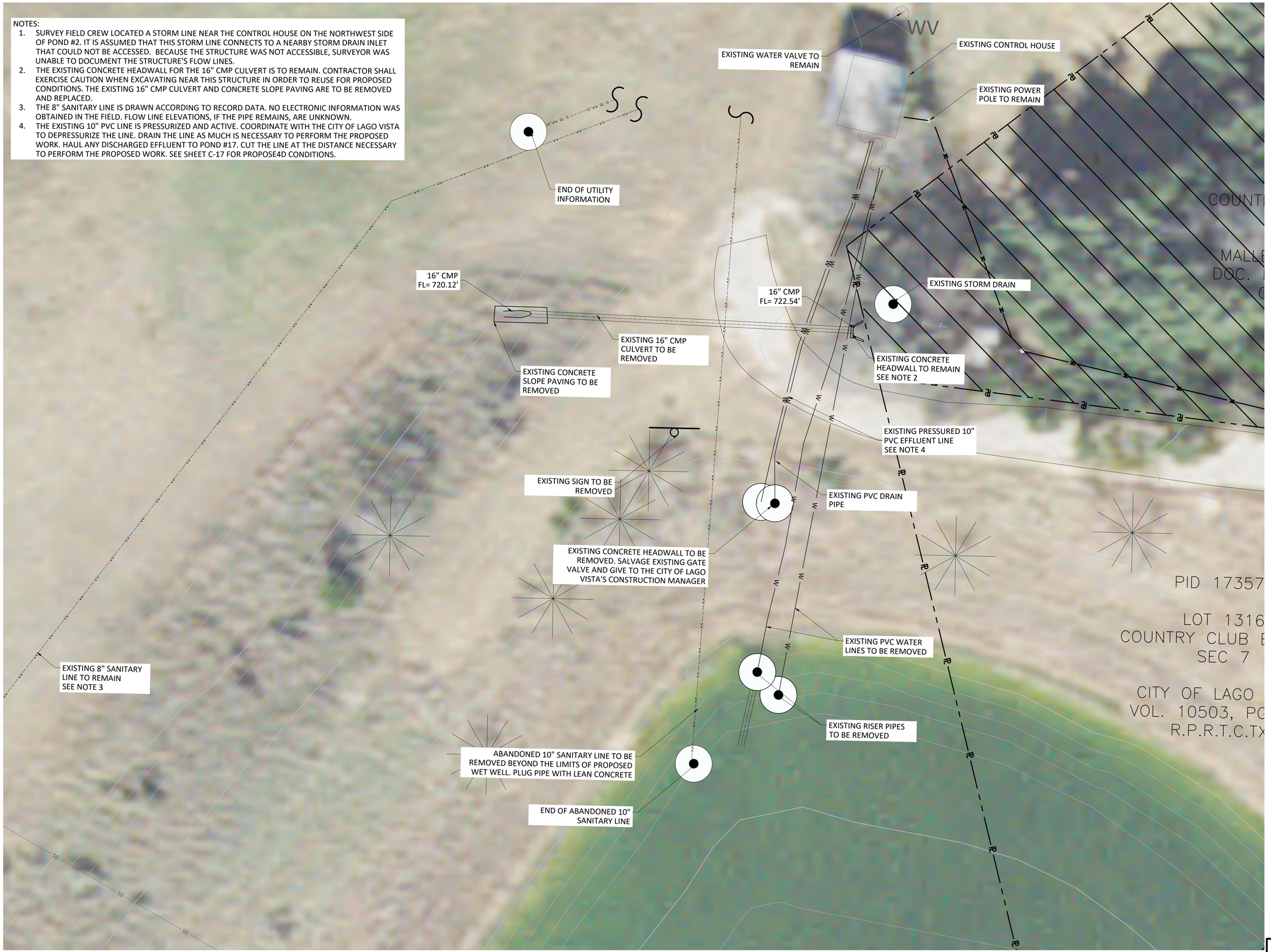

NORTH

0 10' 20'
SCALE IN FEET

ISSUED FOR BID

Freese and Nichols, Inc.
Texas Registered Engineering Firm F-2144

STATE OF TEXAS
BRYCE EARL TODD
145856
LICENSED
PROFESSIONAL ENGINEER
08/13/2024

FREESE AND NICHOLS
10431 Morado Circle, Suite 300
Austin, Texas 78759
Phone - (512) 617-3100
Web - www.freese.com

CITY OF LAGO VISTA
EFLLUENT POND #17 REPAIRS AND POND #2 IMPROVEMENTS
CIVIL
POND #2 UTILITY DEMOLITION PLAN

F&N JOB NO.	LGV23021
DATE	8/13/2024
DESIGNED	BET
DRAWN	MG
CHECKED	JJG
APPROVED	HGO

NO.	ISSUE	BY	DATE	FILE NAME

VERIFY SCALE 0 1
Bar is one inch on original drawing. If not one inch on this sheet, adjust scale.

SHEET C-2
SEQ. 6 OF 37

ACAD Rel: 24.2s (LMS Tech)
Filename: N:\WRD\Drawings\CV-PD2-UTIL-DEMO-PL.dwg
Last Saved: 7/29/2024 10:03 AM Saved By: 08354

Plot Date: 8/13/2024 1:08 PM Plot By: 02945 Filename: N:\WRD\Drawings\CV-PD2-UTIL-DEMO-PL.dwg

CURVE TABLE					
CURVE #	DELTA	TANGENT	RADIUS	LENGTH	CHORD LENGTH
C1	32°30'00"	15.42	52.89	30.00	29.60
C2	93°00'00"	56.48	53.60	87.00	77.76
C3	55°30'00"	13.58	25.81	25.00	24.03
C4	38°30'13"	19.71	56.44	37.93	37.22
C6	27°07'34"	11.07	45.88	21.72	21.52

LINE TABLE						
LINE #	LENGTH	DIRECTION	START POINT NORTHING	START POINT EASTING	END POINT NORTHING	END POINT EASTING
L1	50.00	N77° 52' 54.60"W	10131563.58	3028672.50	10131574.08	3028623.61
L2	169.00	S69° 37' 05.40"W	10131571.95	3028594.09	10131513.09	3028435.67
L3	86.00	S23° 22' 54.60"E	10131441.57	3028405.14	10131362.64	3028439.27
L4	304.72	S78° 52' 54.60"E	10131347.56	3028457.98	10131288.80	3028756.99
L6	166.36	S62° 41' 29.00"W	10131321.71	3028928.85	10131245.39	3028781.04
L7	80.00	N10° 42' 16.71"E	10131498.09	3028625.63	10131576.70	3028640.49
L8	65.01	N87° 48' 41.06"W	10131286.84	3028509.06	10131289.32	3028444.10
L9	41.49	N57° 48' 41.06"W	10131289.32	3028444.10	10131311.42	3028408.99
L10	70.33	N42° 48' 41.06"W	10131311.42	3028408.99	10131363.02	3028361.19
L11	144.24	N12° 48' 41.06"W	10131363.02	3028361.19	10131503.67	3028329.21
L12	58.93	N32° 11' 18.94"E	10131503.67	3028329.21	10131553.54	3028360.60
L14	112.77	N77° 52' 51.60"W	10131539.91	3028782.75	10131563.58	3028672.50

L.O.C. POINT TABLE			
PNT	NORTHING	EASTING	PROPOSED ELEVATION
100	10131566.66	3028341.65	0.00
101	10131641.47	3028568.92	0.00
102	10131638.69	3028686.93	0.00
103	10131596.10	3028669.37	0.00
104	10131567.65	3028677.75	0.00
105	10131552.76	3028815.07	0.00
106	10131525.36	3028913.38	0.00
107	10131475.48	3029125.90	0.00
108	10131435.99	3029119.51	0.00
109	10131492.88	3028891.79	0.00
110	10131367.98	3028864.38	0.00
111	10131318.23	3028946.70	0.00
112	10131287.88	3028912.88	0.00
113	10131218.36	3028768.98	0.00
114	10131256.84	3028706.40	0.00
115	10131300.55	3028518.11	0.00
116	10131281.13	3028510.95	0.00
117	10131283.18	3028442.99	0.00
118	10131306.96	3028405.21	0.00
119	10131360.45	3028356.13	0.00
120	10131500.14	3028313.19	0.00

POINT TABLE			
PNT	NORTHING	EASTING	PROPOSED ELEVATION
1	10131503.67	3028349.39	707.50
2	10131457.56	3028466.60	0.00
3	10131516.43	3028616.65	0.00
4	10131487.88	3028767.70	0.00
5	10131440.21	3028823.65	0.00
6	10131367.47	3028815.04	0.00
7	10131337.70	3028756.63	0.00
8	10131395.61	3028492.50	0.00
9	10131553.73	3028579.52	724.00
10	10131556.81	3028587.80	0.00
11	10131558.46	3028610.63	724.00
12	10131556.35	3028620.43	0.00
13	10131555.29	3028606.68	0.00
14	10131369.97	3028457.89	0.00
15	10131356.53	3028474.57	724.00
16	10131359.33	3028460.30	724.00
17	10131367.40	3028450.29	0.00
18	10131302.96	3028767.52	0.00
19	10131301.33	3028755.41	0.00
20	10131298.94	3028767.61	0.00
21	10131300.91	3028780.96	0.00
22	10131337.22	3028833.66	0.00
23	10131358.32	3028849.48	724.00
24	10131326.81	3028830.97	0.00
25	10131547.10	3028356.55	0.00
26	10131503.67	3028329.21	0.00
27	10131447.03	3028340.04	0.00
28	10131449.06	3028348.97	0.00
29	10131499.34	3028352.84	710.83
30	10131536.86	3028372.81	710.16

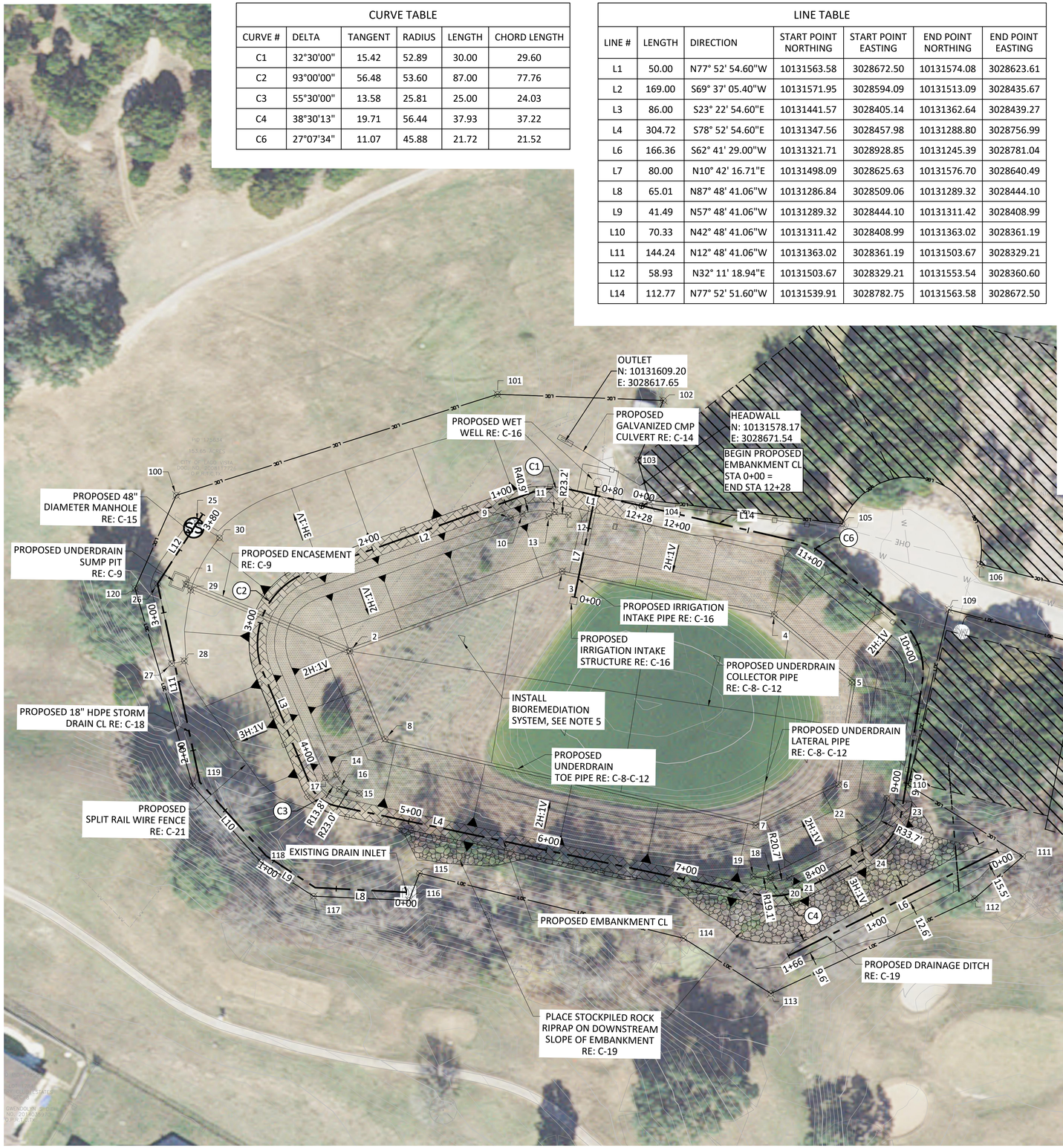

NOTES:

1. THE HORIZONTAL CONTROL AND COORDINATES SHOWN ON THE DRAWINGS ARE BASED UPON TEXAS COORDINATE SYSTEM CENTRAL ZONE, NAD 83/2011 (CORS), GRID.
2. VERTICAL CONTROL AND ELEVATION SHOWN ON THIS SURVEY ARE REFERENCED TO NAVD 1988, GEOID 18.
3. THE SUBSTANTIAL PLANIMETRIC FEATURES AS SHOWN HEREON WERE COMPILED FROM CONVENTIONAL SURVEY METHODS.
4. ALL ELEVATIONS ON THIS SHEET REPRESENT TOP OF IMPROVED SURFACE (HDPE LINER, EMBANKMENT, OR SLOPE PROTECTION) WITH THE EXCEPTION OF THE SHOTCRETE TOE BLOCK.
5. CONTRACTOR SHALL INSTALL A BIOREMEDIATION, SYSTEM (BIOBOBOST NEST OR APPROVED EQUAL). CONTRACTOR SHALL COORDINATE WITH THE MANUFACTURER TO DETERMINE THE NUMBER OF UNITS REQUIRED AS WELL AS ANY ADDITIONAL REQUIREMENTS FOR INSTALLATION.

NORTH

0 40' 80'
SCALE IN FEET

ISSUED FOR BID

Freese and Nichols, Inc.
Texas Registered Engineering Firm F-2144

STATE OF TEXAS · 145856 · REGISTERED PROFESSIONAL ENGINEER · JOHN G. VOLD · 08/13/2024

FREESE NICHOLS
10431 Morado Circle, Suite 300
Austin, Texas 78759
Phone - (512) 617-3100
Web - www.freese.com

CITY OF LAGO VISTA
EFFLUENT POND #17 REPAIRS AND
POND #2 IMPROVEMENTS
CIVIL
POND #2 DIMENSION CONTROL

F&N JOB NO.	LGV23021
DATE	8/13/2024
DESIGNED	BET
DRAWN	MG
CHECKED	JJG
APPROVED	HGO

NO.	ISSUE	BY	DATE

FILE NAME

VERIFY SCALE Bar is one inch on original drawing. If not one inch on this sheet, adjust scale.
0 1"

SHEET C-3

SEQ. 7 OF 37

ACAD Rel: 24.2s (LMS Tech)
Filename: N:\WRD\Drawings\CV-PD2-DIM-CNTRL.dwg
Last Saved: 8/5/2024 8:13 AM Saved By: 03675

Plot Date: 8/13/2024 1:09 PM Plot By: 02945 Filename: N:\WRD\Drawings\CV-PD2-DIM-CNTRL.dwg

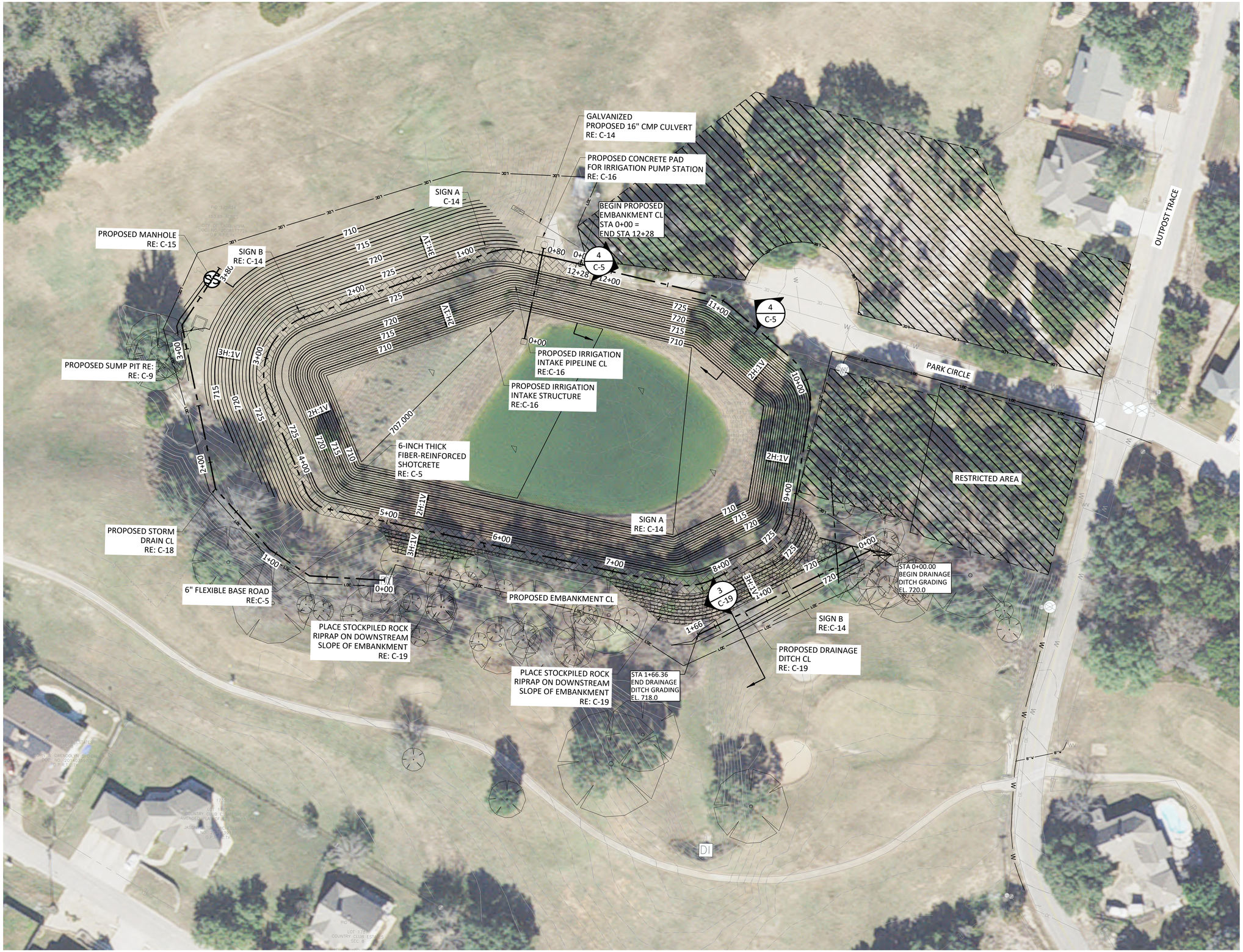

NOTES:

1. FROM STATION 0+00 TO STATION 4+50 INSTALL A 3' THICK LAYER OF ZONE 1 COMPACTED EARTHFILL ON THE INTERIOR SLOPE FROM ELEVATION 724' TO THE BOTTOM OF THE POND. SEE SHEET C-5 FOR DETAILS.

NORTH

0 40' 80'
SCALE IN FEET

ISSUED FOR BID

Freese and Nichols, Inc.
Texas Registered Engineering Firm F-2144

STATE OF TEXAS
BRYCE EARL TODD
145856
LICENSED
PROFESSIONAL ENGINEER
08/13/2024

FREESE AND NICHOLS
10431 Morado Circle, Suite 300
Austin, Texas 78759
Phone - (512) 617-3100
Web - www.freese.com

CITY OF LAGO VISTA
EFLLUENT POND #17 REPAIRS AND
POND #2 IMPROVEMENTS
CIVIL
POND #2 PROPOSED GRADING PLAN

F&N JOB NO.	LGV23021
DATE	8/13/2024
DESIGNED	BET
DRAWN	MG
CHECKED	JJG
APPROVED	HGO

NO.	ISSUE	BY	DATE

FILE NAME

VERIFY SCALE 0 1
Bar is one inch on original drawing. If not one inch on this sheet, adjust scale.

SHEET C-4
SEQ. 8 OF 37

ACAD Rel: 24.2s (LMS Tech)
Filename: N:\WRD\Drawings\CV-PD2-PL-PROP.dwg
Last Saved: 7/30/2024 7:46 AM Saved By: 08354

Plot Date: 8/13/2024 1:09 PM Plot By: 02945 Filename: N:\WRD\Drawings\CV-PD2-PL-PROP.dwg

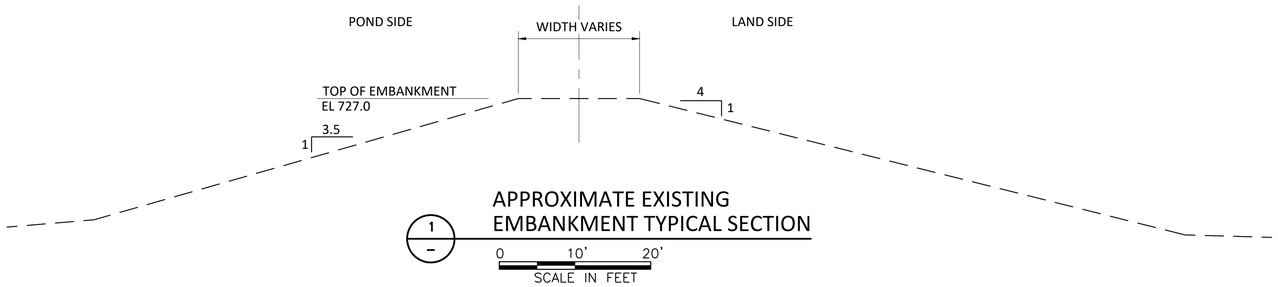

1 — APPROXIMATE EXISTING EMBANKMENT TYPICAL SECTION

0 10' 20'
SCALE IN FEET

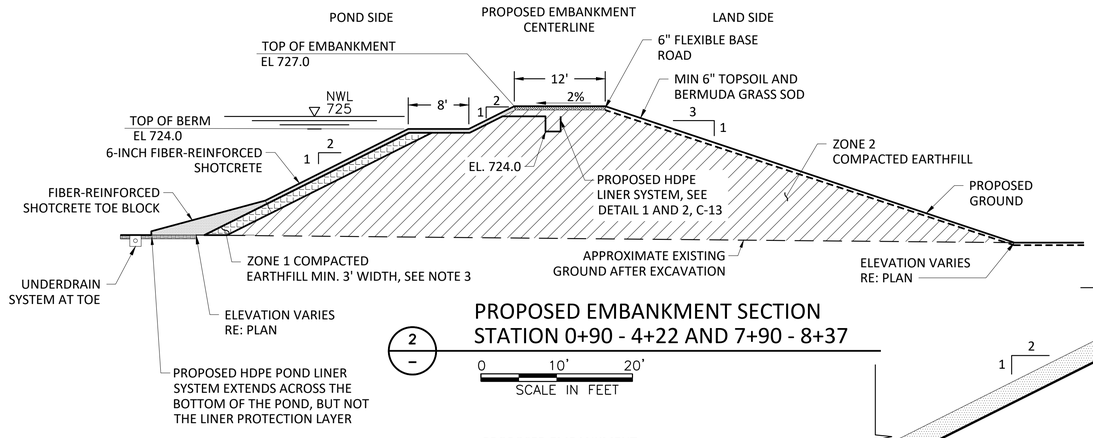

2 — PROPOSED EMBANKMENT SECTION STATION 0+90 - 4+22 AND 7+90 - 8+37

0 10' 20'
SCALE IN FEET

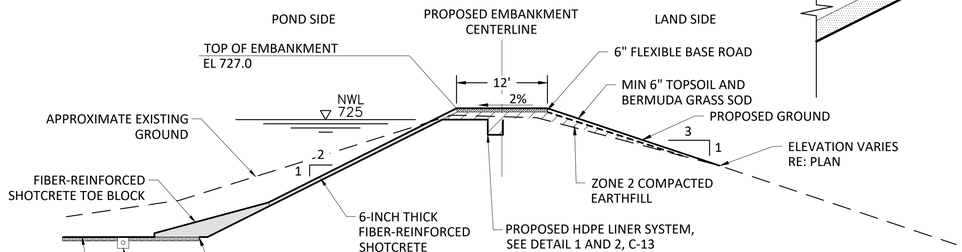

3 — PROPOSED EMBANKMENT SECTION STATION 0+00 - 0+50 AND 4+61 - 7+44

0 10' 20'
SCALE IN FEET

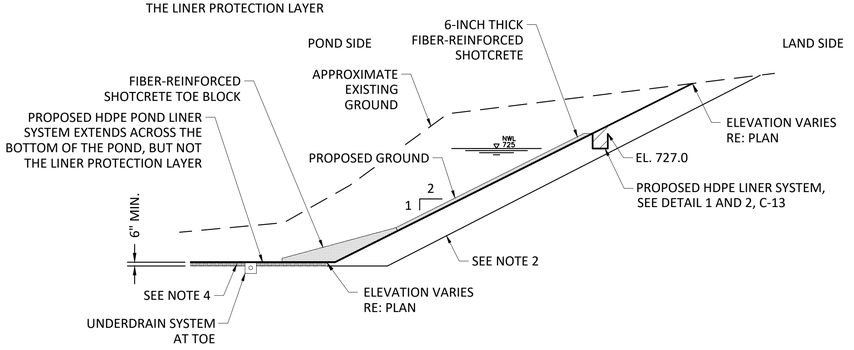

4 — TYPICAL SECTION SLOPE EXCAVATION

0 10' 20'
SCALE IN FEET

NOTES:
1. STATION 0+50 - 0+90, 4+22 - 4+61, 7+44 - 7+90, AND 8+37 - 8+87 CONTAIN THE EMBANKMENT TRANSITION SECTION. RE C-4 FOR THE TRANSITION OF THE EMBANKMENT BERM.
2. LIMESTONE SURFACES EXPOSED ON CUT SLOPES AND ACROSS THE BOTTOM OF THE POND SHALL BE OVER EXCAVATED 8' HORIZONTAL WIDTH ON THE SIDE SLOPES AND 6" ON THE BOTTOM, AND REPLACED WITH ZONE 2 COMPACTED EARTHFILL PRIOR TO LINER SYSTEM PLACEMENT.
3. ZONE 1 COMPACTED EARTHFILL APPLIES TO THE PROPOSED EMBANKMENT FROM STATION 0+00 TO STATION 4+50.
4. EXCAVATE AREAS WITHIN THE PROPOSED BOTTOM OF POND IN ORDER TO PLACE A MINIMUM OF 6" THICK ZONE 2 COMPACTED EARTHFILL.

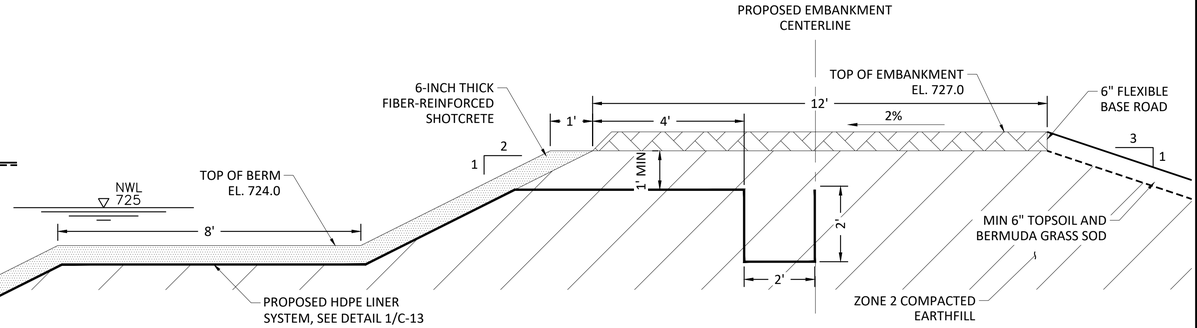

5 — EMBANKMENT CREST AND BERM DETAIL

0 2 4
SCALE IN FEET

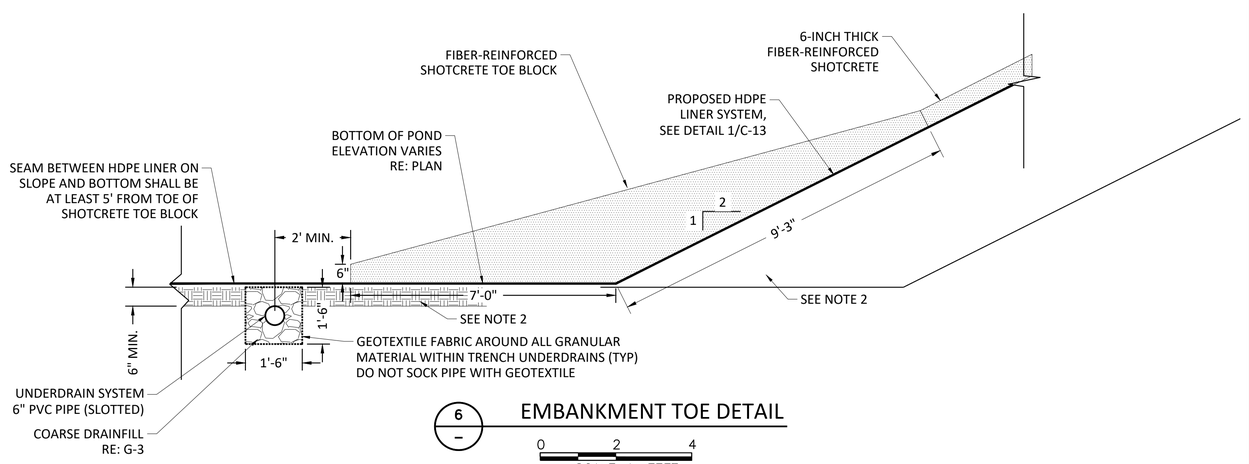

6 — EMBANKMENT TOE DETAIL

0 2 4
SCALE IN FEET

ISSUED FOR BID

Freese and Nichols, Inc.
Texas Registered Engineering Firm F-2144
STATE OF TEXAS — 145856 — LICENSED PROFESSIONAL ENGINEER — 08/13/2024
FREESE NICHOLS
10431 Morado Circle, Suite 300
Austin, Texas 78759
Phone - (512) 617-3100
Web - www.freese.com

CITY OF LAGO VISTA
EFFLUENT POND #17 REPAIRS AND POND #2 IMPROVEMENTS
CIVIL

POND #2 TYPICAL SECTIONS

NO.	ISSUE	BY	DATE	FILE NAME

F&N JOB NO.	LGV23021
DATE	8/13/2024
DESIGNED	BET
DRAWN	MG
CHECKED	JJG
APPROVED	HGO

VERIFY SCALE — Bar is one inch on original drawing, if not one inch on this sheet, adjust scale. 0 1"

SHEET C-5
SEQ. 9 OF 37

ACAD Rel: 24.2s (LMS Tech)
Filename: N:\WRD\Drawings\CV-PD2-TYP-SECT.dwg
Last Saved: 7/29/2024 10:47 AM Saved By: 08354
Plot Date: 8/13/2024 1:09 PM Plot By: 02945 Filename: N:\WRD\Drawings\CV-PD2-TYP-SECT.dwg

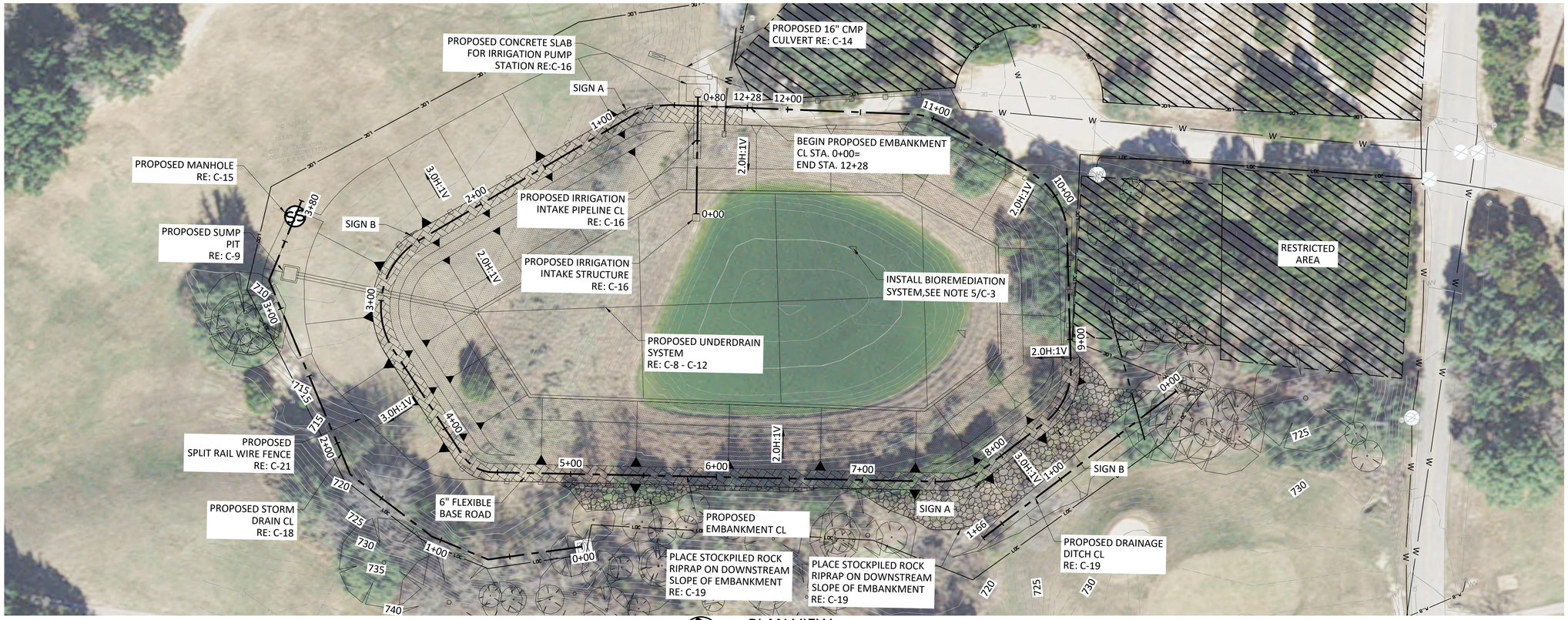

PLAN VIEW

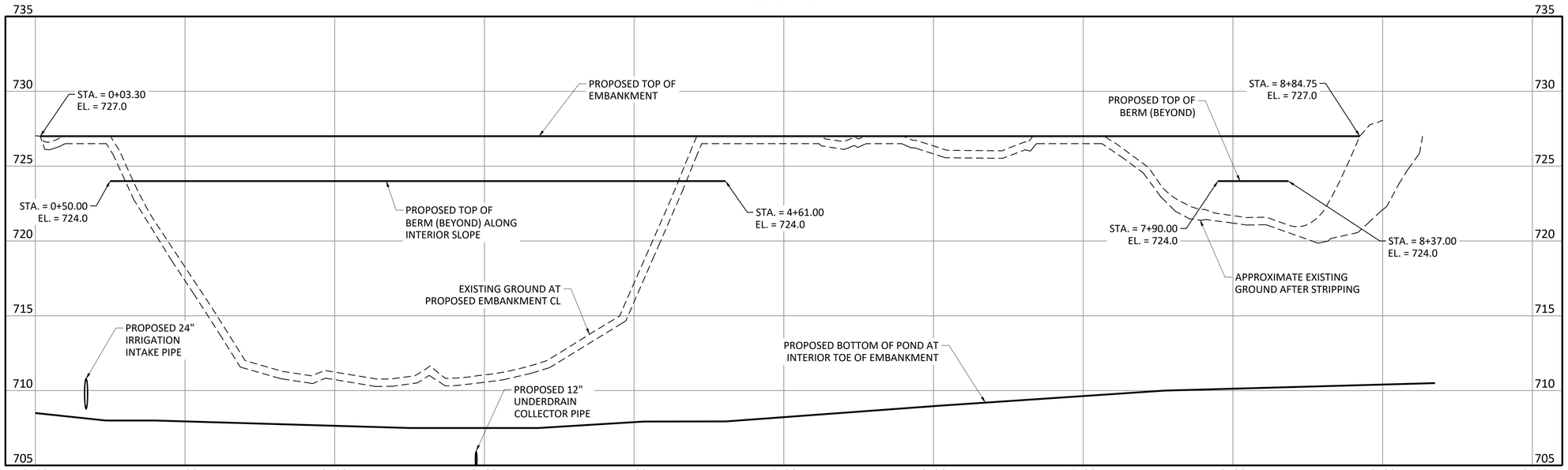

PROFILE

0 40' 80' SCALE IN FEET HORIZONTAL

0 4 8 SCALE IN FEET VERTICAL

NOTE:
1. ALL ELEVATIONS ON THIS SHEET REPRESENT TOP OF IMPROVED SURFACE (HDPE LINER, EMBANKMENT, OR SLOPE PROTECTION) WITH THE EXCEPTION OF THE SHOTCRETE TOE BLOCK.

ISSUED FOR BID

Freese and Nichols, Inc.
Texas Registered Engineering Firm F-2144
STATE OF TEXAS JOHN G. CHRISTIANSEN 145856 LICENSED PROFESSIONAL ENGINEER
JOHN G. CHRISTIANSEN 08/13/2024
FREESE NICHOLS
10431 Morado Circle, Suite 300
Austin, Texas 78759
Phone - (512) 617-3100
Web - www.freese.com

CITY OF LAGO VISTA
EFFLUENT POND #17 REPAIRS AND POND #2 IMPROVEMENTS
CIVIL

POND #2 EMBANKMENT PLAN AND PROFILE

F&N JOB NO.	LGV23021
DATE	8/13/2024
DESIGNED	BET
DRAWN	MG
CHECKED	JJG
APPROVED	HGO

NO. | ISSUE | BY | DATE | FILE NAME

VERIFY SCALE Bar is one inch on original drawing. If not one inch on this sheet, adjust scale. 0 1

SHEET C-6

SEQ. 10 OF 37

ACAD Rel: 24.2s (LMS Tech)
Filename: N:\WRD\Drawings\CV-PD2 PL-PROF.dwg
Last Saved: 8/5/2024 8:15 AM Saved By: 03675
Plot Date: 8/13/2024 1:10 PM Plot By: 02945 Filename: N:\WRD\Drawings\CV-PD2 PL-PROF.dwg

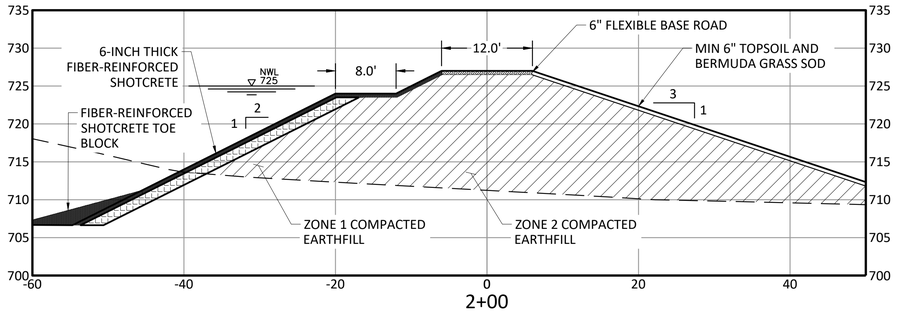

PROPOSED EMBANKMENT
STATION 2+00

1

SCALE IN FEET 0 10' 20'

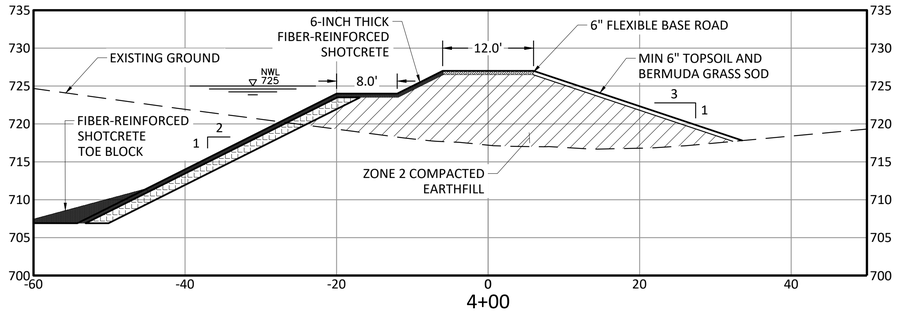

PROPOSED EMBANKMENT
STATION 4+00

2

SCALE IN FEET 0 10' 20'

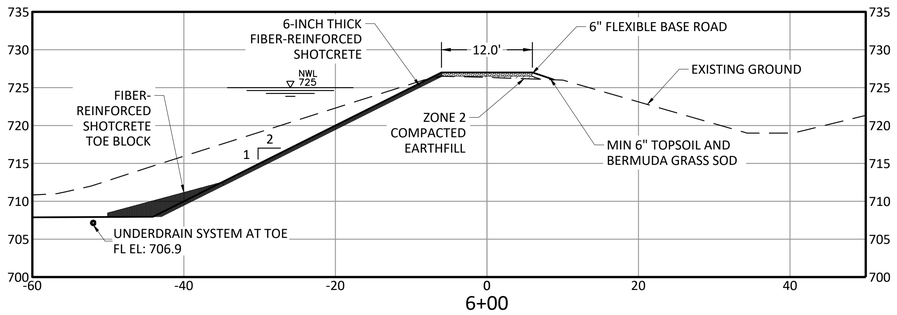

PROPOSED EMBANKMENT
STATION 6+00

3

SCALE IN FEET 0 10' 20'

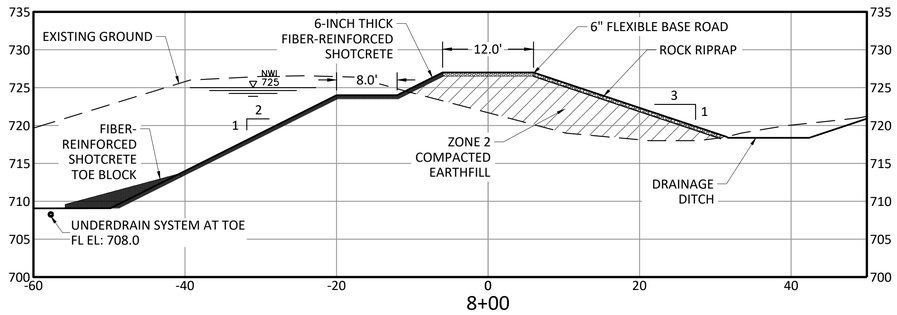

PROPOSED EMBANKMENT
STATION 8+00

4

SCALE IN FEET 0 10' 20'

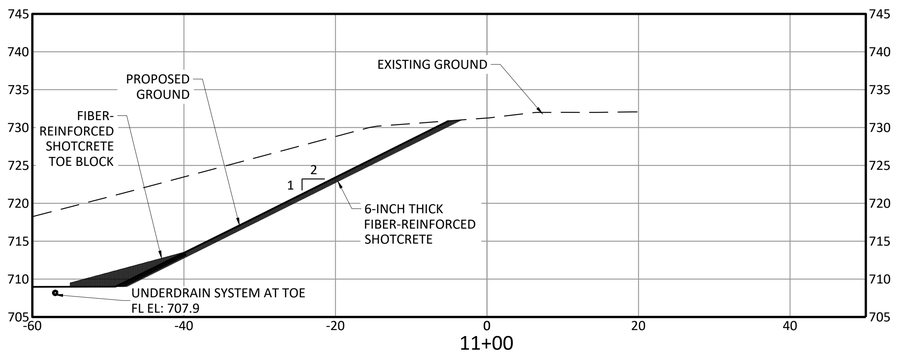

PROPOSED EMBANKMENT
STATION 11+00

5

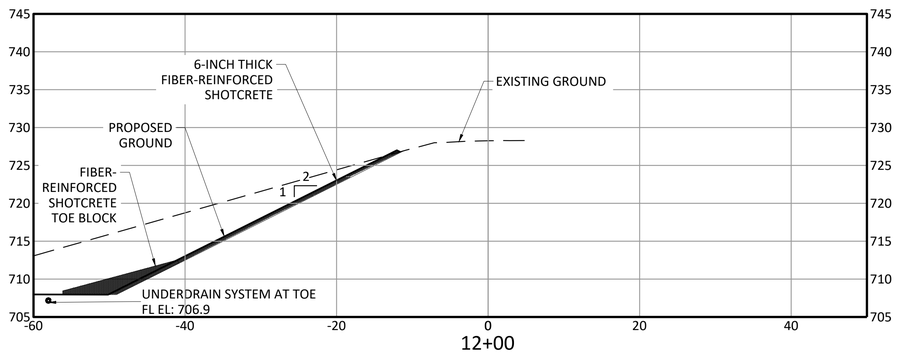

PROPOSED EMBANKMENT
STATION 12+00

6

ISSUED FOR BID

Freese and Nichols, Inc.
Texas Registered Engineering Firm F-2144

FREESE NICHOLS
10431 Morado Circle, Suite 300
Austin, Texas 78759
Phone - (512) 617-3100
Web - www.freese.com

CITY OF LAGO VISTA
EFFLUENT POND #17 REPAIRS AND
POND #2 IMPROVEMENTS
CIVIL

POND #2 EMBANKMENT CROSS SECTIONS

F&N JOB NO.	LGV23021
DATE	8/13/2024
DESIGNED	BET
DRAWN	MG
CHECKED	JJG
APPROVED	HGO

NO. | ISSUE | BY | DATE | FILE NAME

VERIFY SCALE Bar is one inch on original drawing, if not one inch on this sheet, adjust scale.
0 1"

SHEET C-7
SEQ. 11 OF 37

ACAD Rel: 24.2s (LMS Tech)
Filename: N:\WRD\Drawings\CV-PD2-EMB-CRSEC.dwg
Last Saved: 7/29/2024 11:01 AM Saved By: 08354

Plot Date: 8/13/2024 1:10 PM Plot By: 02945 Filename: N:\WRD\Drawings\CV-PD2-EMB-CRSEC.dwg

NOTES:

1. THE 8" SANITARY LINE IS DRAWN ACCORDING TO RECORD DATA. NO ELECTRONIC INFORMATION WAS OBTAINED IN THE FIELD. FLOW LINE ELEVATIONS, IF THE PIPE REMAINS, ARE UNKNOWN. IF THE PIPE IS DISCOVERED TO BE IN PLACE DURING THE EXCAVATION OF THE UNDERDRAIN SYSTEM, IMMEDIATELY HALT CONSTRUCTION ACTIVITIES NEAR THE PIPE. COORDINATE WITH THE CITY OF LAGO VISTA TO DISCOVER THE SOURCE AND STATUS OF THE PIPE. IF THE PIPE IS ABANDONED, REMOVE 10 FEET (5 FEET ON EITHER SIDE OF THE UNDERDRAIN COLLECTOR PIPE, AND PLUG WITH LEAN CONCRETE. IF THE PIPE IS ACTIVE, COORDINATE WITH THE CITY OF LAGO VISTA ABOUT REROUTING THE UTILITY.

POINT TABLE			
PNT	DESCRIPTION	NORTHING	EASTING
1	A1	10131408.76	3028819.06
2	A2	10131415.57	3028769.83
3	A3	10131429.32	3028670.54
4	A4	10131442.24	3028577.25
5	A5	10131457.56	3028466.60
6	A6	10131504.04	3028348.46
7	A7	10131341.13	3028758.94
8	A8	10131360.10	3028660.40
9	A9	10131379.62	3028568.10
10	A10	10131395.61	3028492.50
11	A11	10131476.42	3028778.72
12	A12	10131486.01	3028766.83
13	A13	10131502.20	3028681.18
15	A14	10131514.36	3028616.83
16	A15	10131502.74	3028586.10

NOTES:

1. POINT A1 IS STATION 0+00 FOR THE UNDERDRAIN COLLECTOR, LEFT TOE, AND RIGHT TOE.
2. AFTER AT LEAST 3 FEET OF COMPACTED EARTHFILL IS PLACED OF THE EMBANKMENT, PERFORM A CCTV INSPECTION OF THE UNDERDRAIN SYSTEM. IF ANY PIPES ARE DAMAGED CONTRACTOR SHALL PERFORM REPAIRS TO THE UNDERDRAIN SYSTEM.

NORTH

0 40' 80'

SCALE IN FEET

ISSUED FOR BID

Freese and Nichols, Inc.
Texas Registered Engineering Firm F-2144

STATE OF TEXAS
JAMES G. GRAY
145856
LICENSED PROFESSIONAL ENGINEER
08/13/2024

FREESE NICHOLS
10431 Morado Circle, Suite 300
Austin, Texas 78759
Phone - (512) 617-3100
Web - www.freese.com

CITY OF LAGO VISTA
EFFLUENT POND #17 REPAIRS AND
POND #2 IMPROVEMENTS
CIVIL

POND #2 UNDERDRAIN PLAN

NO.	ISSUE	BY	DATE

VERIFY SCALE Bar is one inch on original drawing, if not one inch on this sheet, adjust scale.
0 1

F&N JOB NO.	LGV23021
DATE	8/13/2024
DESIGNED	BET
DRAWN	MG
CHECKED	JJG
APPROVED	HGO
FILE NAME	

SHEET C-8

SEQ. 12 OF 37

ACAD Rel: 24.2s (LMS Tech)
Filename: N:\WRD\Drawings\CV-PD2-PL-UNDRN.dwg
Last Saved: 7/30/2024 8:05 AM Saved By: 08354

Plot Date: 8/13/2024 1:10 PM Plot By: 02945 Filename: N:\WRD\Drawings\CV-PD2-PL-UNDRN.dwg

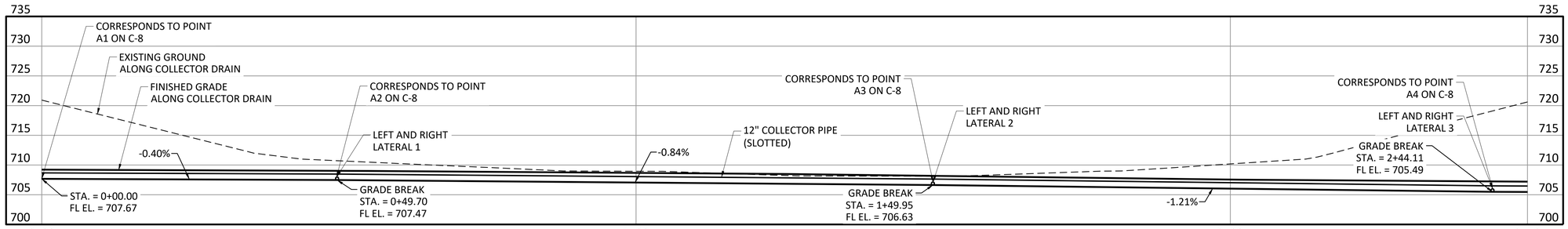

COLLECTOR DRAIN STA 0+00 - 2+50

0 10' 20'

SCALE IN FEET

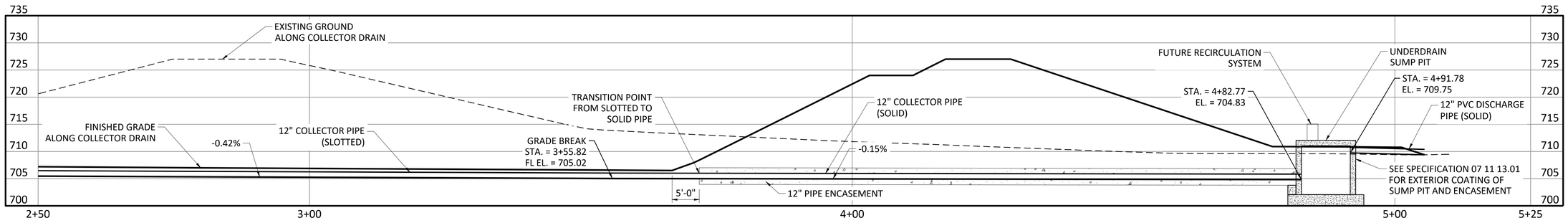

COLLECTOR DRAIN STA 2+50 - END

0 10' 20'

SCALE IN FEET

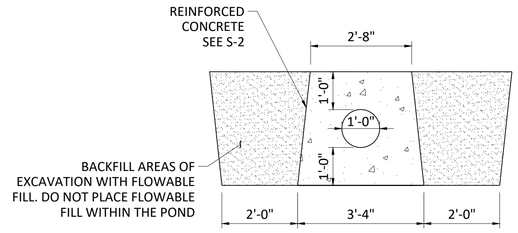

1 – 12" ENCASEMENT

0 2 4

SCALE IN FEET

ISSUED FOR BID

Freese and Nichols, Inc.
Texas Registered Engineering Firm F-2144

STATE OF TEXAS 145856 LICENSED PROFESSIONAL ENGINEER
08/13/2024

FREESE NICHOLS
10431 Morado Circle, Suite 300
Austin, Texas 78759
Phone - (512) 617-3100
Web - www.freese.com

CITY OF LAGO VISTA
EFFLUENT POND #1 AND POND #2 REPAIRS AND POND #2 IMPROVEMENTS
CIVIL

POND #2 UNDERDRAIN PROFILE COLLECTOR DRAIN

F&N JOB NO.	LGV23021
DATE	8/13/2024
DESIGNED	BET
DRAWN	MG
CHECKED	JJG
APPROVED	HGO

NO.	ISSUE	BY	DATE

FILE NAME

VERIFY SCALE Bar is one inch on original drawing. If not one inch on this sheet, adjust scale.

0 1

SHEET C-9

SEQ. 13 OF 37

ACAD Rel: 24.2s (LMS Tech)
Filename: N:\WRD\Drawings\CV-PD2-PROF-UNDRN.dwg
Last Saved: 7/30/2024 8:13 AM Saved By: 08354

Plot Date: 8/13/2024 1:10 PM Plot By: 02945 Filename: N:\WRD\Drawings\CV-PD2-PROF-UNDRN.dwg

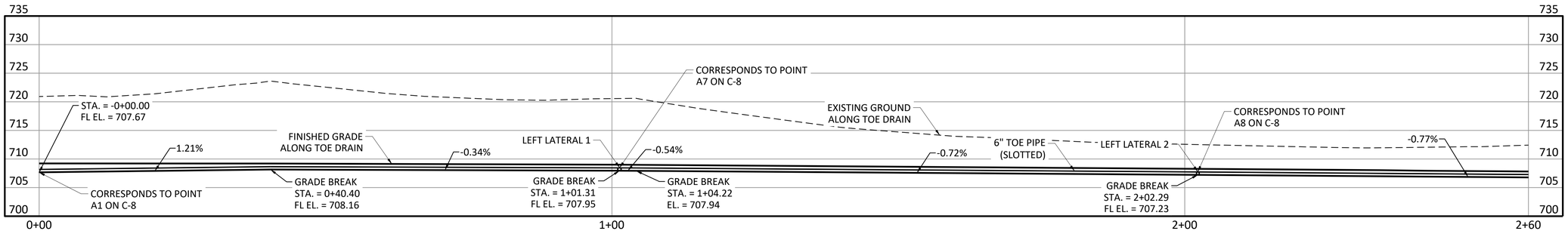

LEFT TOE STA 0+00 - 2+60

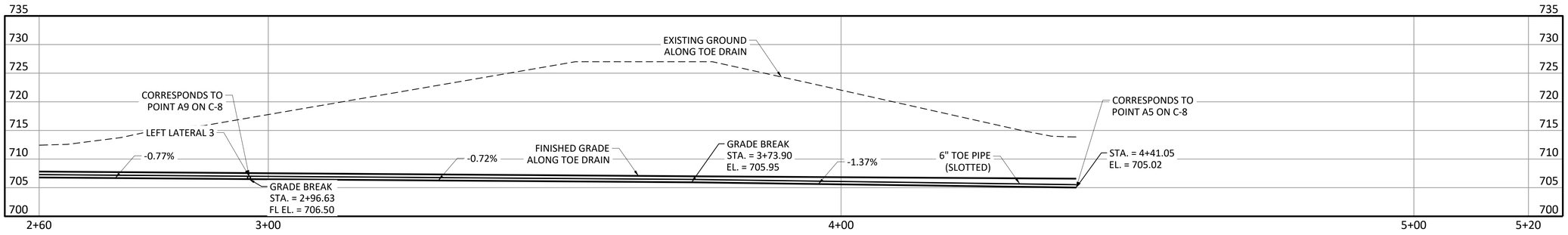

LEFT TOE STA 2+60 - END

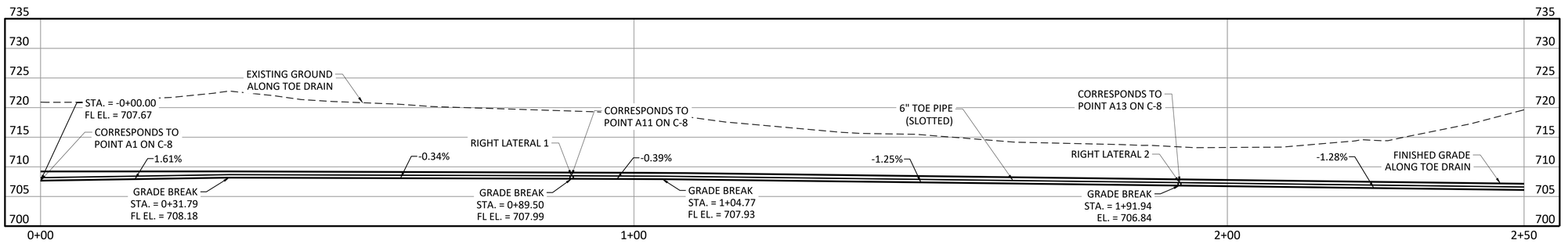

RIGHT TOE STA 0+00 - 2+50

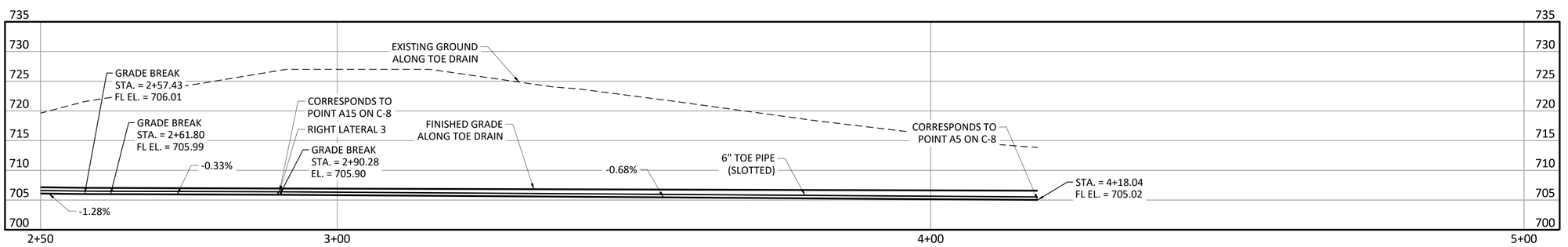

RIGHT TOE STA 2+50 - END

0 10 20
SCALE IN FEET

ISSUED FOR BID

Freese and Nichols, Inc.
Texas Registered Engineering Firm F-2144

STATE OF TEXAS
BRYCE EARL TODD
145856
LICENSED
PROFESSIONAL ENGINEER
08/13/2024

FREESE AND NICHOLS
10431 Morado Circle, Suite 300
Austin, Texas 78759
Phone - (512) 617-3100
Web - www.freese.com

CITY OF LAGO VISTA
EFLLUENT POND #17 REPAIRS AND
POND #2 IMPROVEMENTS
CIVIL
POND #2 UNDERDRAIN PROFILE TOE DRAINS

NO.	ISSUE	BY	DATE

F&N JOB NO. LGV23021
DATE 8/13/2024
DESIGNED BET
DRAWN MG
CHECKED JJG
APPROVED HGO
FILE NAME

VERIFY SCALE 0 1
Bar is one inch on original drawing. If not one inch on this sheet, adjust scale.

SHEET C-10
SEQ. 14 OF 37

ACAD Rel: 24.2s (LMS Tech)
Filename: N:\WRD\Drawings\CV-PD2-PROF-UNDRN2.dwg
Last Saved: 7/19/2024 11:01 AM Saved By: 03675

Plot Date: 8/13/2024 1:10 PM Plot By: 02945 Filename: N:\WRD\Drawings\CV-PD2-PROF-UNDRN2.dwg

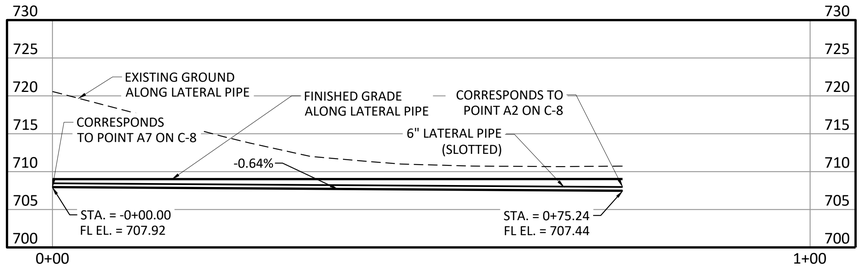

LEFT LATERAL 1

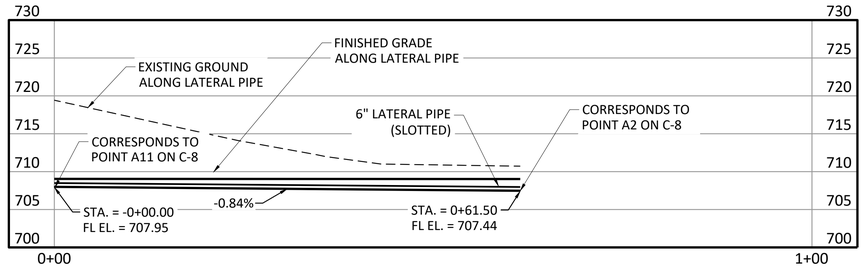

RIGHT LATERAL 1

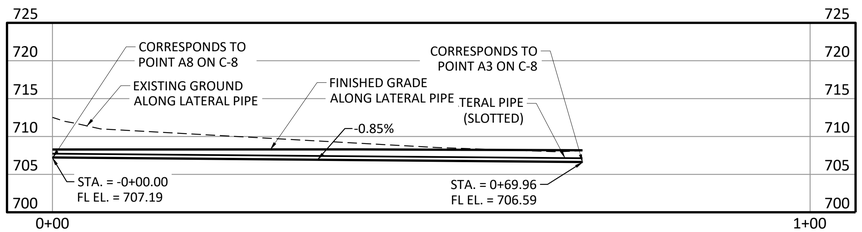

LEFT LATERAL 2

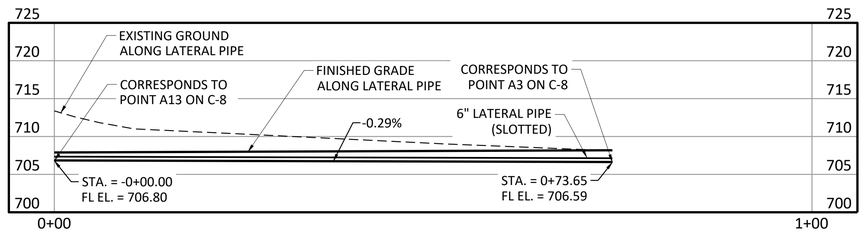

RIGHT LATERAL 2

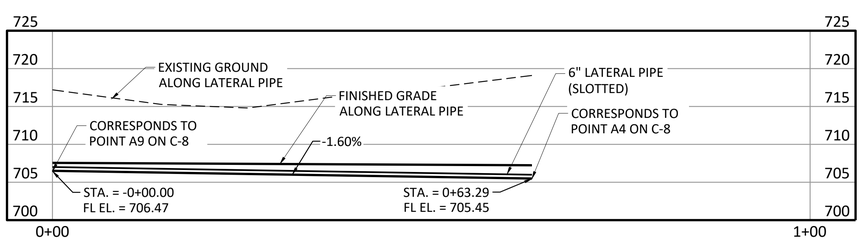

LEFT LATERAL 3

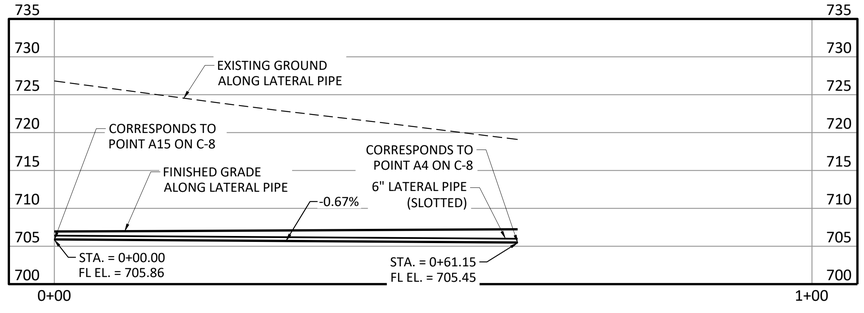

RIGHT LATERAL 3

0 10 20
SCALE IN FEET

ISSUED FOR BID

Freese and Nichols, Inc.
Texas Registered Engineering Firm F-2144

STATE OF TEXAS
BRYCE EARL TODD
145856
LICENSED
PROFESSIONAL ENGINEER
08/13/2024

FREESE AND NICHOLS
10431 Morado Circle, Suite 300
Austin, Texas 78759
Phone - (512) 617-3100
Web - www.freese.com

CITY OF LAGO VISTA
EFLLUENT POND #17 REPAIRS AND
POND #2 IMPROVEMENTS
CIVIL
POND #2 UNDERDRAIN PROFILE LATERAL DRAINS

NO.	ISSUE	BY	DATE

F&N JOB NO. LGV23021
DATE 8/13/2024
DESIGNED BET
DRAWN MG
CHECKED JJG
APPROVED HGO
FILE NAME

VERIFY SCALE 0 1
Bar is one inch on original drawing. If not one inch on this sheet, adjust scale.

SHEET C-11
SEQ. 15 OF 37

ACAD Rel: 24.2s (LMS Tech)
Filename: N:\WRD\Drawings\CV-PD2-PROF-LATDR.dwg
Last Saved: 7/17/2024 4:11 PM Saved By: 08354

Plot Date: 8/13/2024 1:11 PM Plot By: 02945 Filename: N:\WRD\Drawings\CV-PD2-PROF-LATDR.dwg

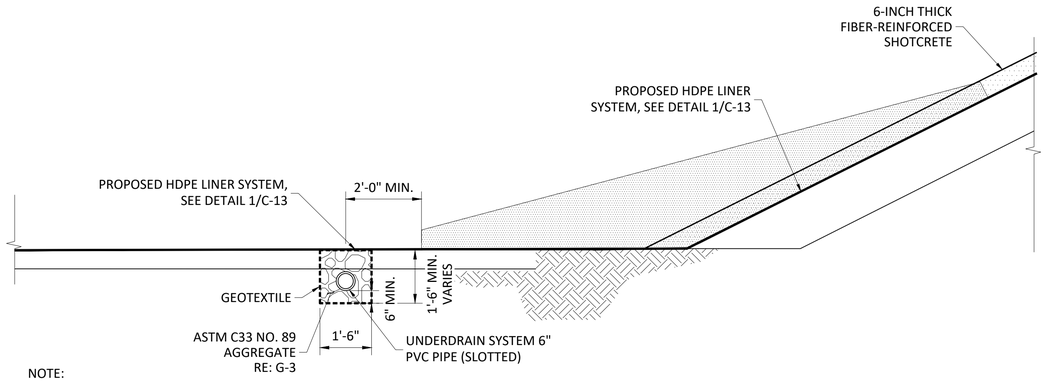

NOTE:
SEAM BETWEEN HDPE GEOMEMBRANE ON SLOPE AND BOTTOM SHALL BE AT LEAST 5' FROM TOE OF SLOPE

1 UNDERDRAIN SYSTEM TOE DRAIN - DETAIL
NOT TO SCALE

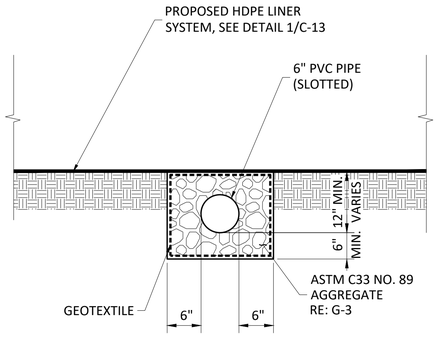

2 UNDERDRAIN SYSTEM LATERAL DRAIN LINES - DETAIL
NOT TO SCALE

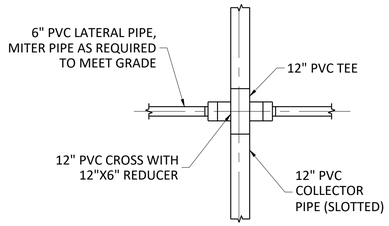

3 UNDERDRAIN SYSTEM CROSS CONNECTION - PLAN VIEW
NOT TO SCALE

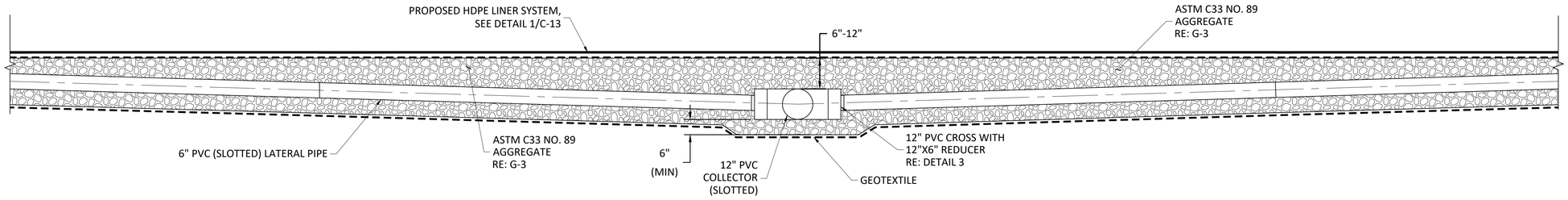

4 UNDERDRAIN CROSS CONNECTIONS
NOT TO SCALE

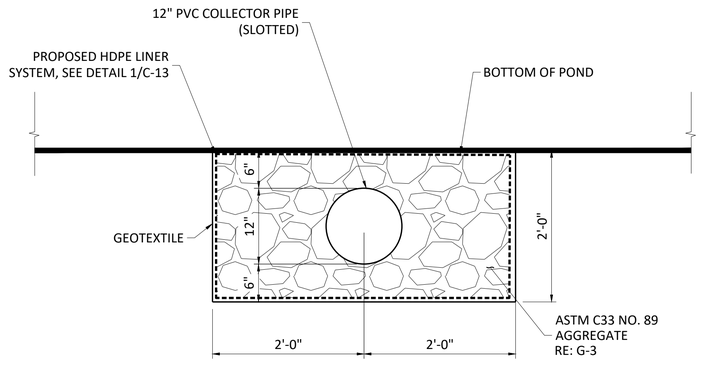

5 UNDERDRAIN SYSTEM COLLECTOR PIPE - DETAIL
1"=1'-0"

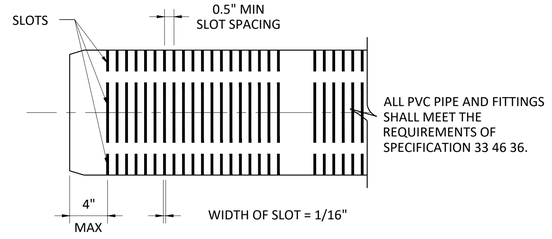

NOTES:

1. SLOT SPACING SHALL BE 0.5".
2. SLOTS SHALL BE PLACED IN NO MORE THAN SIX (6) ROWS SYMMETRICALLY ABOUT THE PIPE CENTERLINE. THE SOLID SPACING BETWEEN EACH ROW SHALL BE AS RECOMMENDED BY THE MANUFACTURER.
3. SLOTTED PIPE SHALL PROVIDE A MINIMUM OF ONE (1) SQ. IN. OF OPEN AREA PER FOOT OF PIPE.
4. REFER TO SPECIFICATION SECTION 33 46 36 FOR DETAILS.

6 SLOTTED PIPE DETAIL
NOT TO SCALE

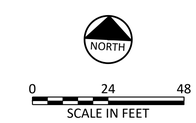

ISSUED FOR BID

Freese and Nichols, Inc.
Texas Registered Engineering Firm F-2144

STATE OF TEXAS
BRYCE EARL TODD
145856
LICENSED
PROFESSIONAL ENGINEER
08/13/2024

FREESE AND NICHOLS
10431 Morado Circle, Suite 300
Austin, Texas 78759
Phone - (512) 617-3100
Web - www.freese.com

CITY OF LAGO VISTA
EFLLUENT POND #17 REPAIRS AND
POND #2 IMPROVEMENTS
CIVIL
POND #2 UNDERDRAIN DETAILS

F&N JOB NO.	LGV23021
DATE	8/13/2024
DESIGNED	BET
DRAWN	MG
CHECKED	JJG
APPROVED	HGO
FILE NAME	

NO.	ISSUE	BY	DATE

VERIFY SCALE 0 1
Bar is one inch on original drawing. If not one inch on this sheet, adjust scale.

SHEET C-12
SEQ. 16 OF 37

ACAD Rel: 24.2s (LMS Tech)
Filename: N:\WRD\Drawings\CV-PD2-DET-UNDRN.dwg
Last Saved: 7/29/2024 11:06 AM Saved By: 08354

Plot Date: 8/13/2024 1:11 PM Plot By: 02945 Filename: N:\WRD\Drawings\CV-PD2-DET-UNDRN.dwg

NOTES:

1. THE CONTRACTOR RESPONSIBLE FOR INSTALLING THE LINER PROTECTION LAYER SHALL UTILIZE A SEPARATION MECHANISM (E.G., A RUB SHEET) BETWEEN THE LINER SYSTEM AND THE FORMWORK OR OTHER EQUIPMENT REQUIRED TO INSTALL THE LINER PROTECTION LAYER, IN ORDER TO AVOID DIRECT CONTACT BETWEEN THESE ITEMS WHICH MAY LEAD TO DEFECTS IN THE LINER SYSTEM.

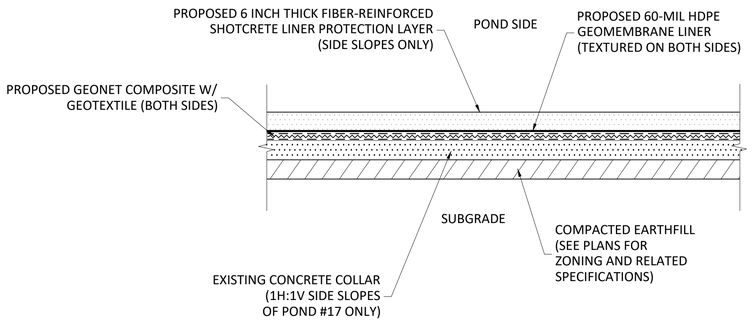

1 LINER SYSTEM DETAIL
1/2"=1'-0"

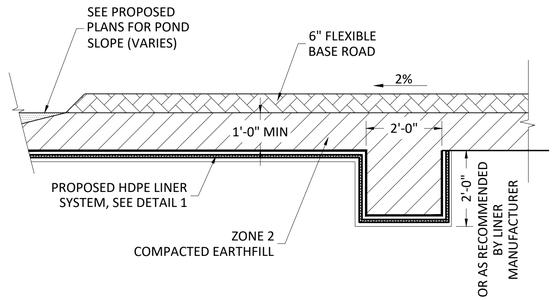

2 ANCHOR TRENCH DETAIL FOR PROPOSED POND LINER SYSTEM
1/2"=1'-0"

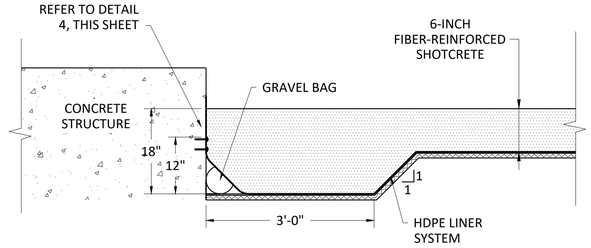

NOTES:
1. DETAIL IS AN ACCEPTABLE METHOD OF ATTACHING LINER TO CONCRETE. ATTACHMENT WITH AN EMBEDDED POLYETHYLENE CHANNEL AS PER MANUFACTURER'S RECOMMENDATIONS IS ACCEPTABLE. CONTRACTOR MAY SUBMIT AN ALTERNATE PLAN FOR APPROVAL.
2. NOTE APPLIES TO THE OUTLET HEADWALL OF THE BYPASS LINE AT POND #2 AND THE CONCRETE STAIR CASES AT POND #17. LINER SHALL BE CONTINUOUS UNDER ALL OTHER STRUCTURES AND SLOPE PAVING.
3. SILICON SEALANT SHALL BE APPLIED TO SEAM BETWEEN THE TWO NEOPRENE GASKETS PRIOR TO PLACEMENT OF LINER AND BATTEN BAR. SILICON SEALANT SHALL BE APPLIED AROUND EACH BOLT AFTER INSTALLATION AND TIGHTENING. APPLY SEALANT ALONG TOP EDGE OF LINER.
4. PARTIALLY FILL GRAVEL BAGS TO FACILITATE TRANSITION OF LINER FROM HORIZONTAL TO VERTICAL. USE PEA GRAVEL.

3 ATTACHMENT OF LINER TO CONCRETE
3/4"=1'-0"

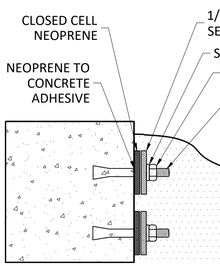

4 - BOLT DETAIL
NOT TO SCALE

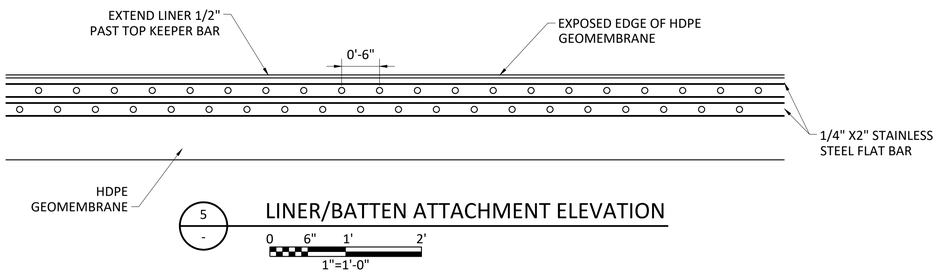

5 - LINER/BATTEN ATTACHMENT ELEVATION

ISSUED FOR BID

Freese and Nichols, Inc.
Texas Registered Engineering Firm F-2144

STATE OF TEXAS 145856 LICENSED PROFESSIONAL ENGINEER
08/13/2024

FREESE NICHOLS
10431 Morado Circle, Suite 300
Austin, Texas 78759
Phone - (512) 617-3100
Web - www.freese.com

CITY OF LAGO VISTA
EFFLUENT POND #17 REPAIRS AND POND #2 IMPROVEMENTS
CIVIL

GEOSYNTHETIC POND LINER DETAILS

F&N JOB NO.	LGV23021
DATE	8/13/2024
DESIGNED	BET
DRAWN	MG
CHECKED	JJG
APPROVED	HGO

NO.	ISSUE	BY	DATE

FILE NAME

VERIFY SCALE Bar is one inch on original drawing. If not one inch on this sheet, adjust scale.
0 1"

SHEET C-13
SEQ. 17 OF 37

ACAD Rel: 24.2s (LMS Tech)
Filename: N:\WRD\Drawings\CV-PD2- DET-LNR.dwg
Last Saved: 7/17/2024 3:55 PM Saved By: 08354

Plot Date: 8/13/2024 1:11 PM Plot By: 02945 Filename: N:\WRD\Drawings\CV-PD2- DET-LNR.dwg

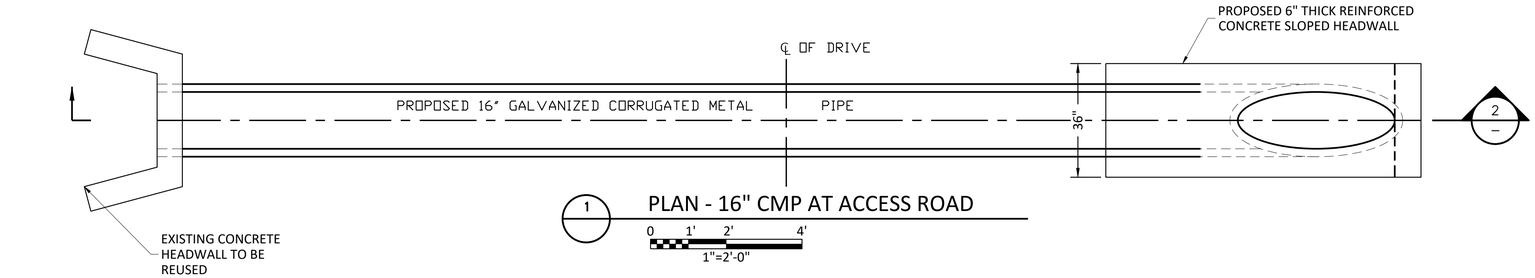

1 PLAN - 16" CMP AT ACCESS ROAD

0 1' 2' 4'

1"=2'-0"

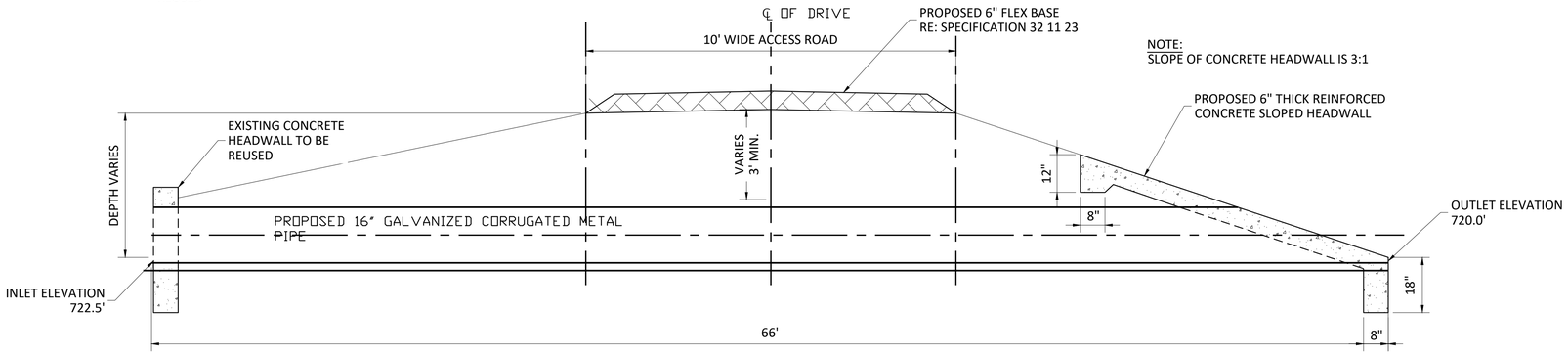

2 SECTION - 16" GALVANIZED CMP AT ACCESS ROAD

0 1' 2' 4'

1"=2'-0"

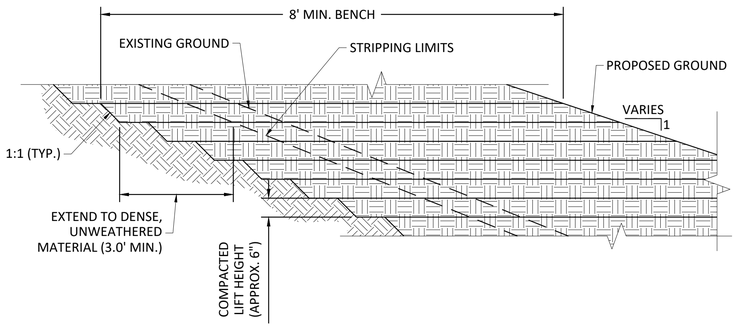

3 TYPICAL BENCHING ON EXISTING EMBANKMENT SLOPE

0 1' 2' 4'

1"=2'-0"

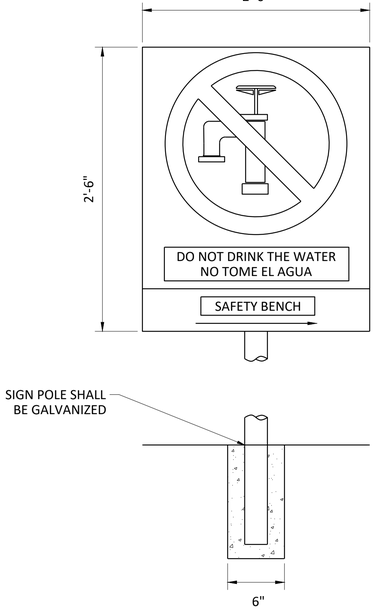

NOTE:
1. CONTRACTOR TO SUBMIT SHOP DRAWINGS CONTAINING THE FONT, SIZE, COLOR, AND SPACING OF THE MARKING SHOWN AS WELL AS THE CONNECTION DETAILS OF THE SIGN TO THE POLE.
2. LETTERING SHALL BE BLACK AND THE WARNING STRIKETHROUGH SHALL BE SAFETY RED.
3. CUSTOM SIGNS SHALL FOLLOW THE GUIDELINES FOR REGULATORY SIGNS IN THE STANDARD HIGHWAY SIGN DESIGNS FOR TEXAS MANUAL

4 CUSTOM SIGN A

0 4" 8" 1'

1-1/2"=1'-0"

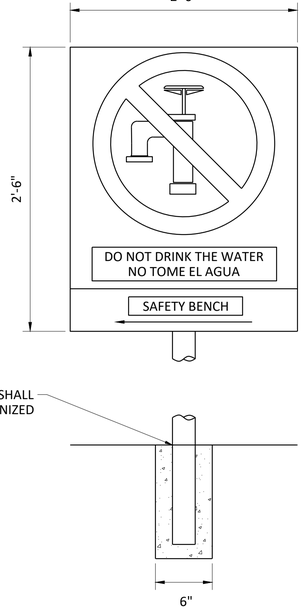

NOTE:
1. CONTRACTOR TO SUBMIT SHOP DRAWINGS CONTAINING THE FONT, SIZE, COLOR, AND SPACING OF THE MARKING SHOWN AS WELL AS THE CONNECTION DETAILS OF THE SIGN TO THE POLE.
2. LETTERING SHALL BE BLACK AND THE WARNING STRIKETHROUGH SHALL BE SAFETY RED.
3. CUSTOM SIGNS SHALL FOLLOW THE GUIDELINES FOR REGULATORY SIGNS IN THE STANDARD HIGHWAY SIGN DESIGNS FOR TEXAS MANUAL

5 CUSTOM SIGN B

0 4" 8" 1'

1-1/2"=1'-0"

ISSUED FOR BID

Freese and Nichols, Inc.
Texas Registered Engineering Firm F-2144

FREESE NICHOLS
10431 Morado Circle, Suite 300
Austin, Texas 78759
Phone - (512) 617-3100
Web - www.freese.com

CITY OF LAGO VISTA
EFFLUENT POND #1 AND #17 REPAIRS AND
POND #2 IMPROVEMENTS
CIVIL
POND #2 MISC. DETAILS 1 OF 2

F&N JOB NO.	LGV23021
DATE	8/13/2024
DESIGNED	BET
DRAWN	MG
CHECKED	JJG
APPROVED	HGO

NO.	ISSUE	BY	DATE	FILE NAME

VERIFY SCALE Bar is one inch on original drawing. If not one inch on this sheet, adjust scale.

0 1

SHEET C-14

SEQ. 18 OF 37

ACAD Rel: 24.2s (LMS Tech)
Filename: N:\WRD\Drawings\CV-PD2- DET-MISC.dwg
Last Saved: 7/19/2024 10:33 AM Saved By: 02945

Plot Date: 8/13/2024 1:11 PM Plot By: 02945 Filename: N:\WRD\Drawings\CV-PD2- DET-MISC.dwg

DISCLAIMER:
The use of this standard is governed by the "Texas Engineering Practice Act." No warranty of any kind is made by TxDOT for any purpose whatsoever. TxDOT assumes no responsibility for the conversion of this standard to other formats or for incorrect results or damages resulting from its use.

DATE:
FILE:

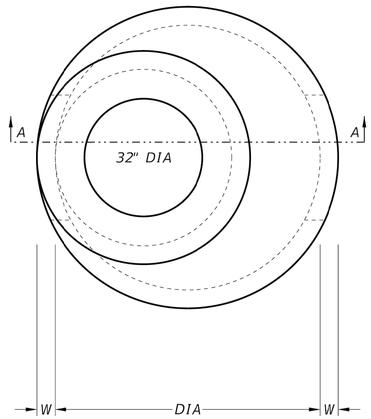

PLAN VIEW "A"

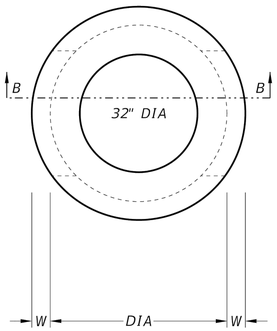

PLAN VIEW "B"

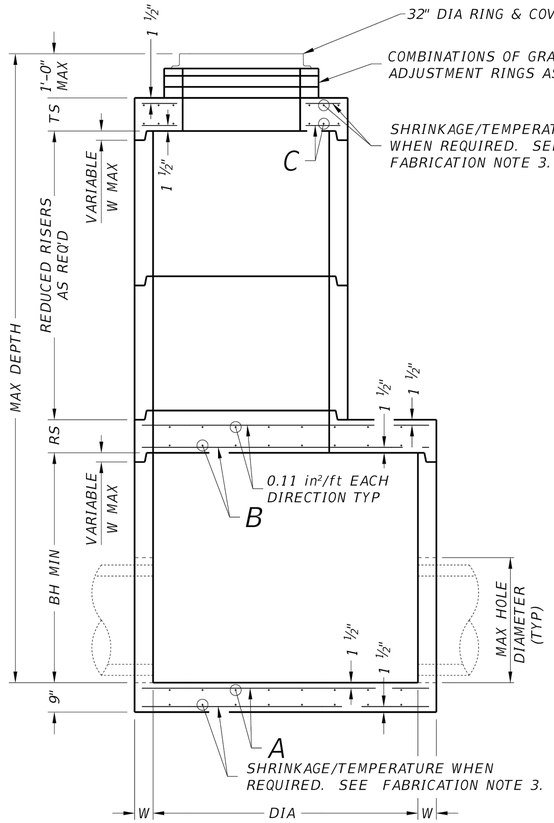

SECTION A-A

ROUND REDUCED RISER OPTION
SHOWING FLAT SLAB TOP

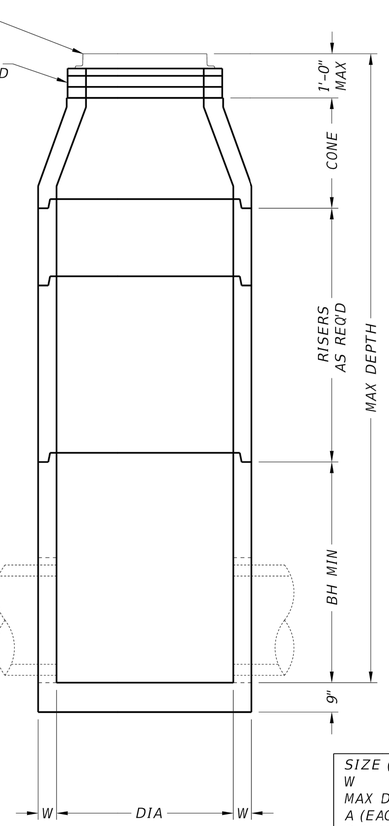

SECTION B-B

ROUND RISER OPTION
SHOWING CONE

FABRICATION NOTES:

1. Provide Class "H" concrete in accordance with Item 421 and having a minimum compressive strength of 5,000 psi.
2. Provide Grade 60 reinforcing steel or equivalent area of WWR. Provide circumferential reinforcing steel in vertical walls of base, riser and cone in accordance with ASTM C478.
3. Slabs with a thickness of 8" or greater require shrinkage and temperature reinforcing steel. Provide steel area = 0.11 in²/ft each way.
4. Manufacture base and risers to nearest 3" increment.
5. Design tongue and groove joints for full closure on both shoulders. Minimum spigot depth is ¾".
6. Provide lifting devices in conformance with Manufacturer's recommendations.
7. Provide cast iron solid cover, unless noted otherwise elsewhere in the plans.

INSTALLATION NOTES:

1. Cones may be concentric or eccentric. Reduction cones are acceptable. See Manufacturer for cone dimensions.
2. Inverts (benching) to be provided by Contractor. Concrete or mortar used for invert is subsidiary to this item.
3. Seal tongue and groove joints with preformed or bulk mastic in conformance with Manufacturer's recommendations. Tongue and groove joints may be grouted no more than 1" between each section, or ½ the joint depth, whichever is greater.
4. Do not grout rubber gasket joints without Manufacturer's recommendation.
5. Initial installation of grade adjustment rings is limited to 1'-0" Max as shown.
6. Grade adjustment rings may be increased to 2'-0" Max when future construction affects final grade of structure. Make adjustments greater than 2'-0" with additional risers. Adjustments may be made up to the Max depth shown. Structure must be evaluated if Max depth will be exceeded.

GENERAL NOTES:

1. Designed according to ASTM C478.
2. Payment for manhole is per Item 465, "Junction Boxes, Manholes, and Inlets" by type and size.
3. Pipe OD + placement tolerance must be equal or less than Max hole diameter. For rigid pipe, placement tolerance is 4" Max, 2" Min. For flexible pipe, consult boot/seal manufacturer's specification for placement tolerance.

Cover dimensions are clear dimensions, unless noted otherwise.

SIZE (DIA)	48 in	60 in	72 in
W	5 in	6 in	7 in
MAX DEPTH	25 ft	25 ft	25 ft
A (EACH WAY)	0.22 in²/ft	0.30 in²/ft	0.45 in²/ft
B (EACH WAY)	N/A	0.37 in²/ft	0.62 in²/ft
C (EACH WAY)	0.24 in²/ft	0.46 in²/ft	0.46 in²/ft
BH MIN	12 in	36 in	36 in
TS	9 in	9 in	9 in
RS	N/A	9 in	12 in
REDUCED RISER DIA	N/A	48 in	48/60 in
MAX HOLE DIA	32 in	40 in	54 in

HL93 LOADING

Texas Department of Transportation — Bridge Division Standard

PRECAST ROUND MANHOLE

PRM

FILE: CD-PRM-23.dgn	DN: TxDOT	CK: TxDOT	DW: TxDOT	CK: TxDOT
©TxDOT February 2020	CONT	SECT	JOB	HIGHWAY
REVISIONS 3/2023 – Corrected TS and RS callout	DIST	COUNTY		SHEET NO.

NOTES:
1. CONTRACTOR SHALL USE MANHOLE STYLE B, WITH A DIAMETER OF 48 INCHES, FOR THE PROPOSED STORM DRAIN. SEEC-18.

ISSUED FOR BID

Freese and Nichols, Inc.
Texas Registered Engineering Firm F-2144

STATE OF TEXAS — 145856 — LICENSED PROFESSIONAL ENGINEER — 08/13/2024

FREESE NICHOLS
10431 Morado Circle, Suite 300
Austin, Texas 78759
Phone - (512) 617-3100
Web - www.freese.com

CITY OF LAGO VISTA
EFFLUENT PONDS #1 REPAIRS AND POND #2 IMPROVEMENTS
CIVIL
POND #2 MISC. DETAILS 2 OF 2

NO.	ISSUE	BY	DATE

F&N JOB NO.	LGV23021
DATE	8/13/2024
DESIGNED	BET
DRAWN	MG
CHECKED	JJG
APPROVED	HGO

FILE NAME

VERIFY SCALE Bar is one inch on original drawing. If not one inch on this sheet, adjust scale.
0 1"

SHEET C-15
SEQ. 19 OF 37

ACAD Rel: 24.2s (LMS Tech)
Filename: N:\WRD\Drawings\CV-PD2- DET-MISC2.dwg
Last Saved: 8/13/2024 11:08 AM Saved By: 02945
Plot Date: 8/13/2024 1:11 PM Plot By: 02945 Filename: N:\WRD\Drawings\CV-PD2- DET-MISC2.dwg

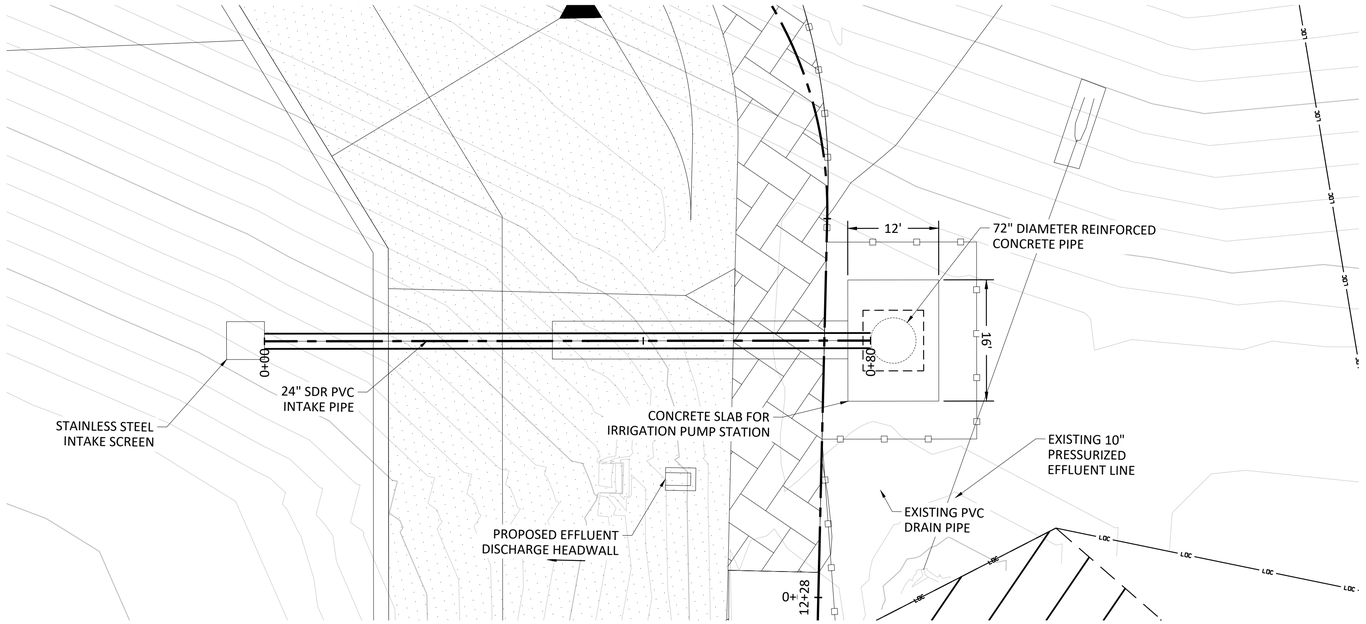

PLAN VIEW

0 10 20

SCALE IN FEET

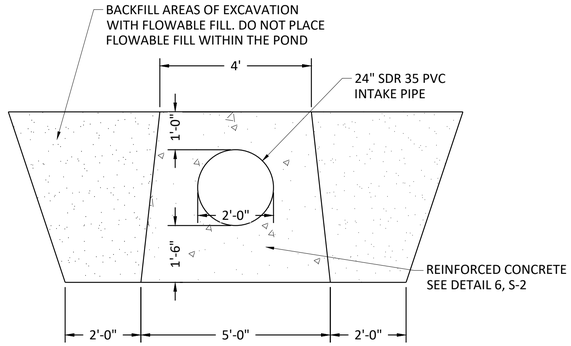

1 – 24" PVC PIPE ENCASEMENT

0 2 4

SCALE IN FEET

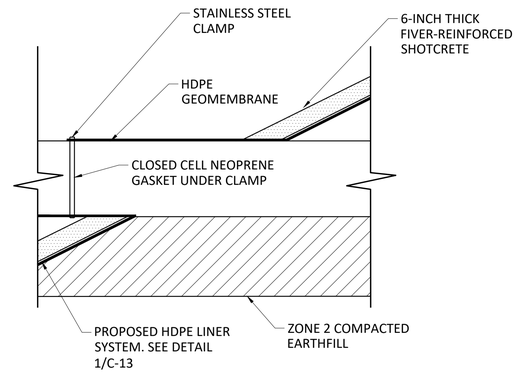

PROFILE VIEW

0 10' 20'

SCALE IN FEET

2 – 24" PVC PIPE PENETRATION

0 2 4

SCALE IN FEET

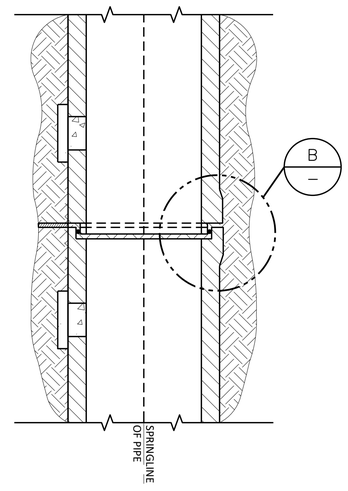

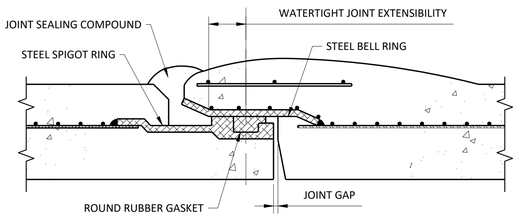

B – DETAIL B

0 10' 20'

SCALE IN FEET

3 – DETAIL OF PIPE JOINT

0 10' 20'

SCALE IN FEET

NOTES:

1. STAINLESS STEEL INTAKE SCREEN SHALL BE STAINLESS STEEL WELDED WIRE MESS AND BE IN ACCORDANCE WITH THE STAINLESS STEEL NOTES ON SHEET S-1. DIMENSIONS ARE 3' WIDTH X 3' DEPTH X 3' HEIGHT. MESH OPENINGS SHALL BE 1"X1".
2. CONTRACTOR SHALL DESIGN THE CONNECTION OF THE INTAKE SCREEN TO THE 24" SDR PVC INTAKE PIPE AND SUBMIT FOR APPROVAL. CONNECTION SHALL CONTAIN SIMILAR METALS.
3. CONTRACTOR SHALL EITHER DRILL THROUGH THE PRECAST PIPE OR ORDER A PRECAST PIPE WITH A PRE-FORMED HOLE TO CONNECT THE 24" SDR 35 PIPE.
4. REINFORCED CONCRETE PIPE SHALL HAVE A 72" INNER DIAMETER AND CONFORM TO AWWA SPEC C-301. THE PIPE SHALL PROTRUDE THROUGH THE TOP CONCRETE SLAB. THE TOP OF PIPE SHALL BE FLUSH WITH THE TOP OF SLAB.

Freese and Nichols, Inc.
Texas Registered Engineering Firm F-2144

STATE OF TEXAS
145856
LICENSED PROFESSIONAL ENGINEER
BRYCE E. BETH, 12/2023
08/13/2024

FREESE NICHOLS
10431 Morado Circle, Suite 300
Austin, Texas 78759
Phone - (512) 617-3100
Web - www.freese.com

CITY OF LAGO VISTA
EFFLUENT POND #17 REPAIRS AND POND #2 IMPROVEMENTS
CIVIL

POND #2 INTAKE STRUCTURE AND PIPE DETAILS

F&N JOB NO.	LGV23021
DATE	8/13/2024
DESIGNED	BET
DRAWN	MG
CHECKED	JJG
APPROVED	HGO

NO.	ISSUE	BY	DATE	FILE NAME

VERIFY SCALE 0 1
Bar is one inch on original drawing. If not one inch on this sheet, adjust scale.

SHEET C-16

SEQ. 20 OF 37

ISSUED FOR BID

ACAD Rel: 24.2s (LMS Tech)
Filename: N:\WRD\Drawings\CV-PD2- ST-PIPEDET.dwg
Last Saved: 8/13/2024 1:04 PM Saved By: 02945

Plot Date: 8/13/2024 1:11 PM Plot By: 02945 Filename: N:\WRD\Drawings\CV-PD2- ST-PIPEDET.dwg

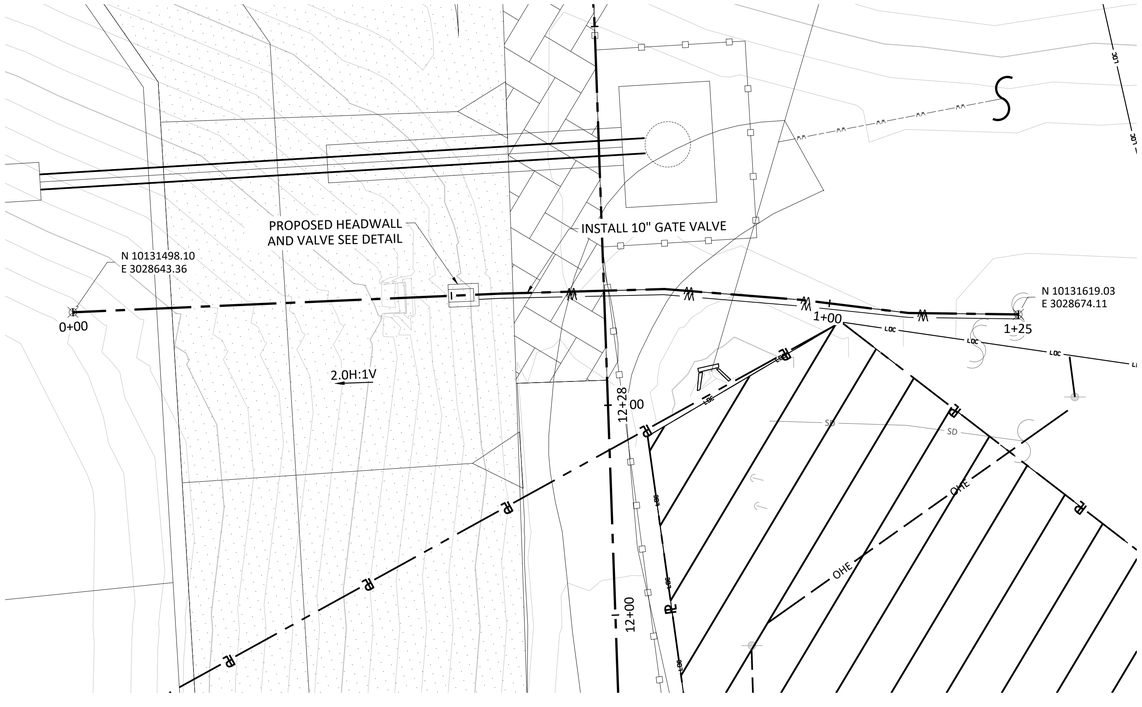

PLAN VIEW

0 10 20
SCALE IN FEET

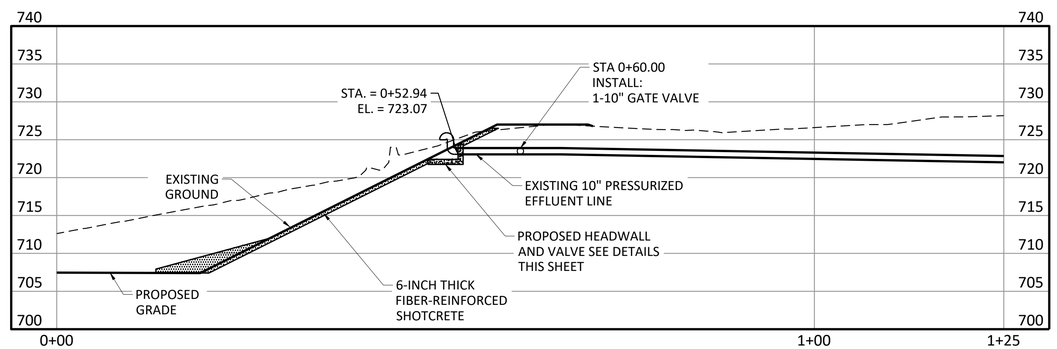

PROFILE VIEW

0 10 20
SCALE IN FEET

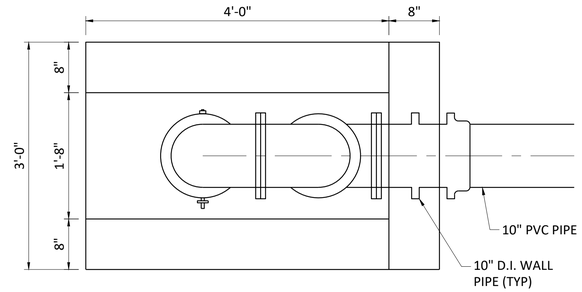

1 DISCHARGE HEADWALL PLAN

0 1 2
SCALE IN FEET

NOTES:

1. CONTRACTOR SHALL VERIFY ELEVATIONS OF THE EXISTING BYPASS LINE. ELEVATIONS MAY VARY FROM WHAT IS SHOWN IN THE PROFILE VIEW

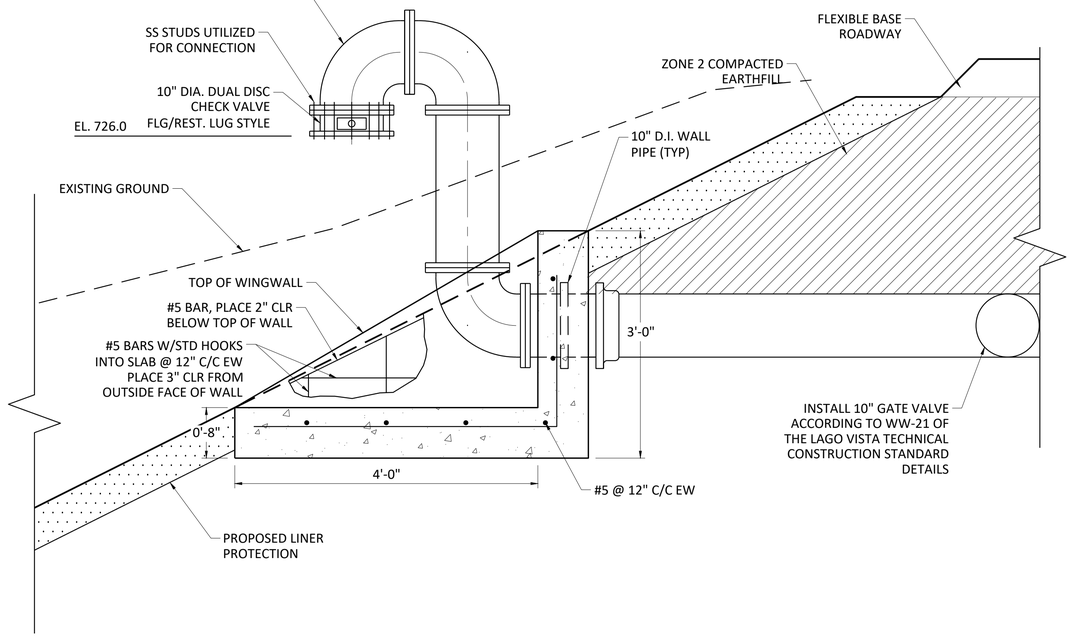

2 DISCHARGE HEADWALL SECTION

0 1 2
SCALE IN FEET

ISSUED FOR BID

Freese and Nichols, Inc.
Texas Registered Engineering Firm F-2144

STATE OF TEXAS — 145856 — LICENSED PROFESSIONAL ENGINEER — 08/13/2024

FREESE NICHOLS
10431 Morado Circle, Suite 300
Austin, Texas 78759
Phone - (512) 617-3100
Web - www.freese.com

CITY OF LAGO VISTA
EFFLUENT POND #17 REPAIRS AND
POND #2 IMPROVEMENTS
CIVIL

POND #2 EFFLUENT PIPELINE PLAN AND PROFILE

F&N JOB NO.	LGV23021
DATE	8/13/2024
DESIGNED	BET
DRAWN	MG
CHECKED	JJG
APPROVED	HGO

NO.	ISSUE	BY	DATE

FILE NAME

VERIFY SCALE Bar is one inch on original drawing. If not one inch on this sheet, adjust scale.
0 1"

SHEET C-17

SEQ. 21 OF 37

ACAD Rel: 24.2s (LMS Tech)
Filename: N:\WRD\Drawings\CV-PD2- BYPASS-PLPRO.dwg
Last Saved: 7/19/2024 4:57 PM Saved By: 03675

Plot Date: 8/13/2024 1:12 PM Plot By: 02945 Filename: N:\WRD\Drawings\CV-PD2- BYPASS-PLPRO.dwg

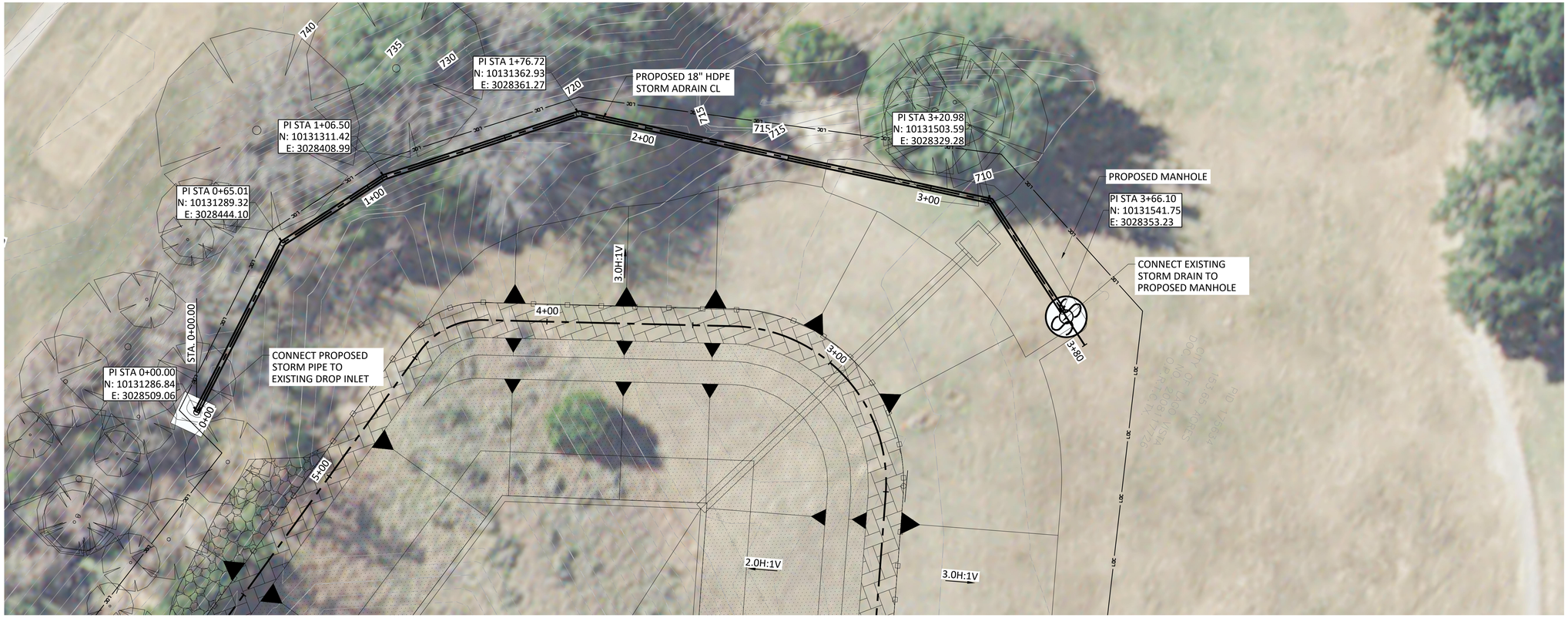

PLAN VIEW

0 20 40
SCALE IN FEET

NOTE:
1. ALL ELEVATIONS ON THIS SHEET REPRESENT TOP OF IMPROVED SURFACE (HDPE LINER, EMBANKMENT, OR SLOPE PROTECTION).

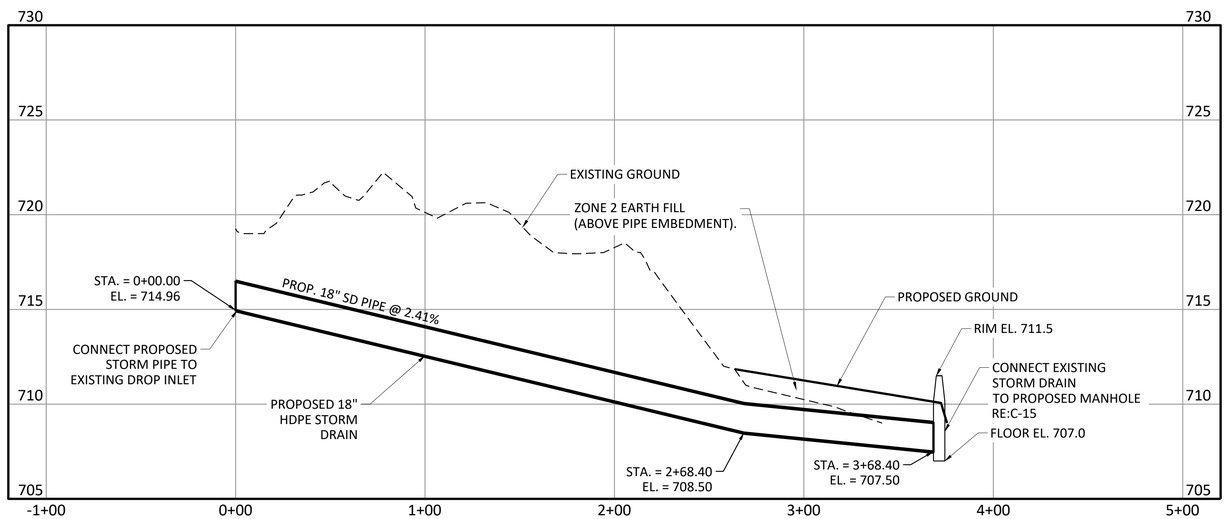

PROFILE

0 40' 80'
SCALE IN FEET
HORIZONTAL

0 4 8
SCALE IN FEET
VERTICAL

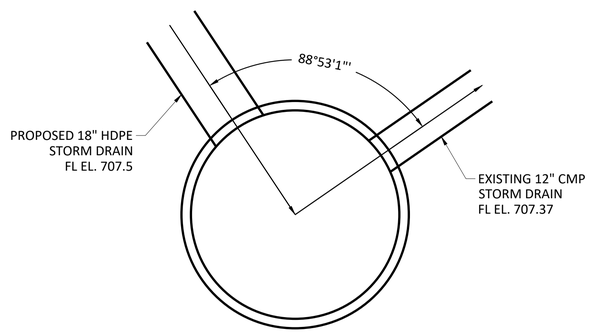

1 MANHOLE INVERT

0 1' 2' 4'
1"=2'-0"

Freese and Nichols, Inc.
Texas Registered Engineering Firm F-2144

STATE OF TEXAS
BRYCE EARL TODD
145856
LICENSED
PROFESSIONAL ENGINEER
08/13/2024

FREESE AND NICHOLS
10431 Morado Circle, Suite 300
Austin, Texas 78759
Phone - (512) 617-3100
Web - www.freese.com

CITY OF LAGO VISTA
EFLLUENT POND #17 REPAIRS AND
POND #2 IMPROVEMENTS
CIVIL
POND #2 STORM DRAIN PLAN AND PROFILE

F&N JOB NO.	LGV23021
DATE	8/13/2024
DESIGNED	BET
DRAWN	MG
CHECKED	JJG
APPROVED	HGO

NO.	ISSUE	BY	DATE

FILE NAME

VERIFY SCALE 0 1
Bar is one inch on original drawing. If not one inch on this sheet, adjust scale.

SHEET C-18
SEQ. 22 OF 37

ISSUED FOR BID

ACAD Rel: 24.2s (LMS Tech)
Filename: N:\WRD\Drawings\CV-PD2-PLPR- STDRN.dwg
Last Saved: 6/14/2024 11:19 AM Saved By: 08354

Plot Date: 8/13/2024 1:12 PM Plot By: 02945 Filename: N:\WRD\Drawings\CV-PD2-PLPR- STDRN.dwg

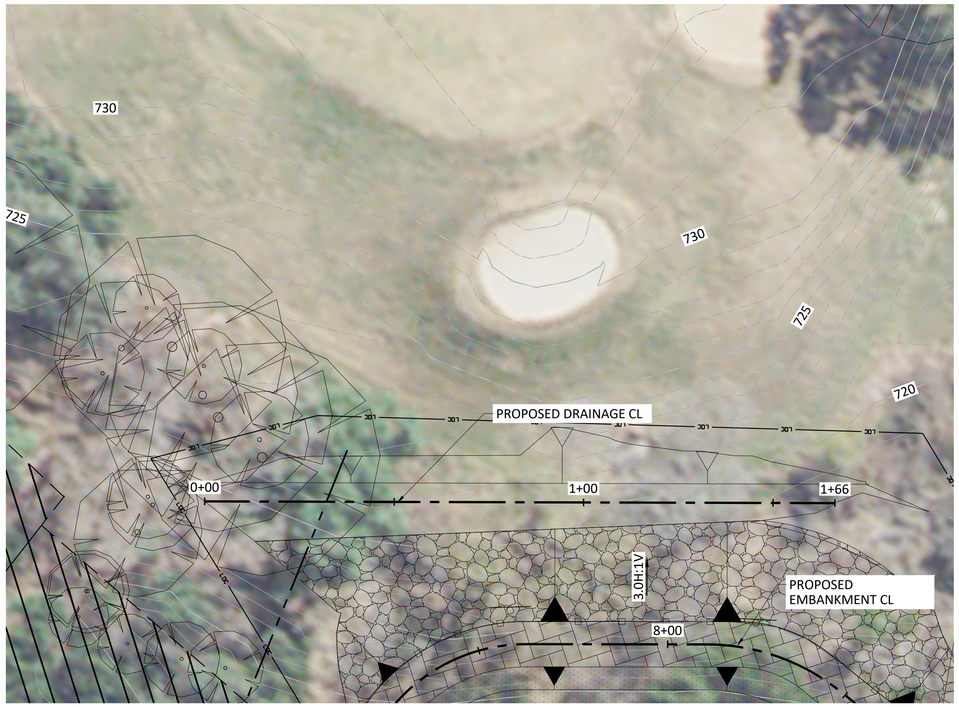

NORTH

PLAN VIEW

0 65.62 131.23
SCALE IN FEET

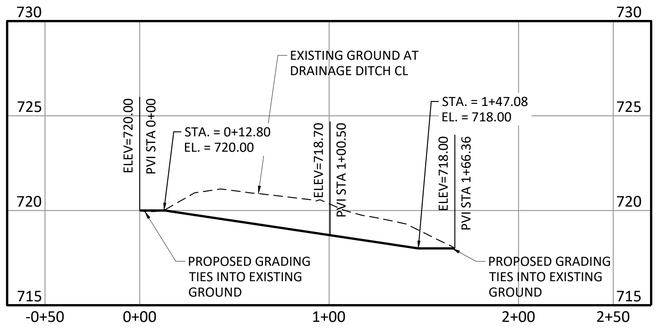

PROFILE

0 20' 40'
SCALE IN FEET
HORIZONTAL

0 4 8
SCALE IN FEET
VERTICAL

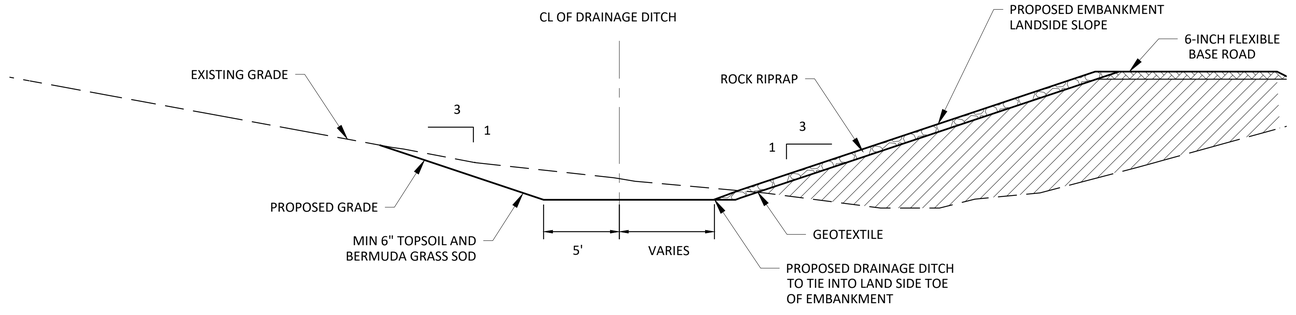

3
C-4

SECTION - DRAINAGE DITCH

0 5' 10'
SCALE IN FEET

ISSUED FOR BID

Freese and Nichols, Inc.
Texas Registered Engineering Firm F-2144

STATE OF TEXAS
BRYCE EARL TODD
145856
LICENSED
PROFESSIONAL ENGINEER
08/13/2024

FREESE AND NICHOLS
10431 Morado Circle, Suite 300
Austin, Texas 78759
Phone - (512) 617-3100
Web - www.freese.com

CITY OF LAGO VISTA
EFLLUENT POND #17 REPAIRS AND
POND #2 IMPROVEMENTS

CIVIL

POND #2 DRAINAGE DITCH PLAN AND PROFILE

F&N JOB NO.	LGV23021
DATE	8/13/2024
DESIGNED	BET
DRAWN	MG
CHECKED	JJG
APPROVED	HGO

NO.	ISSUE	BY	DATE

FILE NAME

VERIFY SCALE 0 1
Bar is one inch on original drawing. If not one inch on this sheet, adjust scale.

SHEET C-19

SEQ. 23 OF 37

ACAD Rel: 24.2s (LMS Tech)
Filename: N:\WRD\Drawings\CV-PD2-PROP-DRDITCH.dwg
Last Saved: 7/29/2024 12:19 PM Saved By: 08354

Plot Date: 8/13/2024 1:12 PM Plot By: 02945 Filename: N:\WRD\Drawings\CV-PD2-PROP-DRDITCH.dwg

NOTES:
1. ALL DISTURBED AREAS SHALL RECEIVE A MINIMUM 6" THICK LAYER OF TOPSOIL AND A TOP LAYER OF BERMUDA GRASS SOD. EXCLUSIONS INCLUDE AREAS TO RECEIVE LINER PROTECTION, THE BOTTOM OF POND #2, AND THE EMBANKMENT CREST.

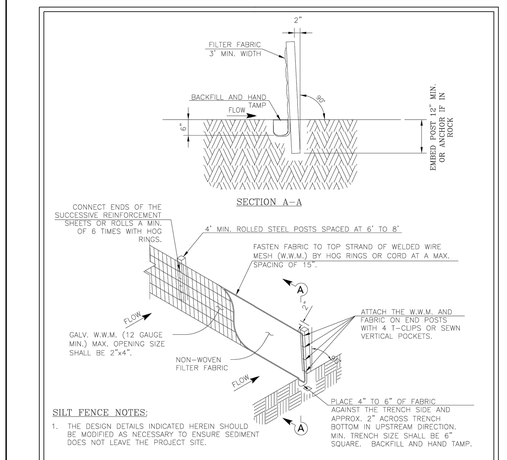

SCALE: NOT TO SCALE

The City of LagoVista, Texas

CITY OF LAGO VISTA
5803 THUNDERBIRD
LAGO VISTA, TX 78645
Phn (512) 267-1155

These documents were prepared by, or under the supervision of:
ERIC BELAJ 107148 February 3, 2019
Engineer's Name PE# Date
Engineer's Signature

SECTION: EROSION CONTROL
DETAIL NO.: EC-2
TITLE: SILT FENCE

0 40' 80'
SCALE IN FEET

ISSUED FOR BID

Freese and Nichols, Inc.
Texas Registered Engineering Firm F-2144

FREESE NICHOLS
10431 Morado Circle, Suite 300
Austin, Texas 78759
Phone - (512) 617-3100
Web - www.freese.com

CITY OF LAGO VISTA
EFFLUENT POND #17 REPAIRS AND
POND #2 IMPROVEMENTS
CIVIL
POND #2 SWPPP

NO.	ISSUE	BY	DATE

F&N JOB NO. LGV23021
DATE 8/13/2024
DESIGNED BET
DRAWN MG
CHECKED JJG
APPROVED HGO
FILE NAME

VERIFY SCALE Bar is one inch on original drawing. If not one inch on this sheet, adjust scale.
0 1

SHEET C-20
SEQ. 24 OF 37

ACAD Rel: 24.2s (LMS Tech)
Filename: N:\WRD\Drawings\CV-PD2-SWPPP.dwg
Last Saved: 8/5/2024 8:16 AM Saved By: 03675
Plot Date: 8/13/2024 1:12 PM Plot By: 02945 Filename: N:\WRD\Drawings\CV-PD2-SWPPP.dwg

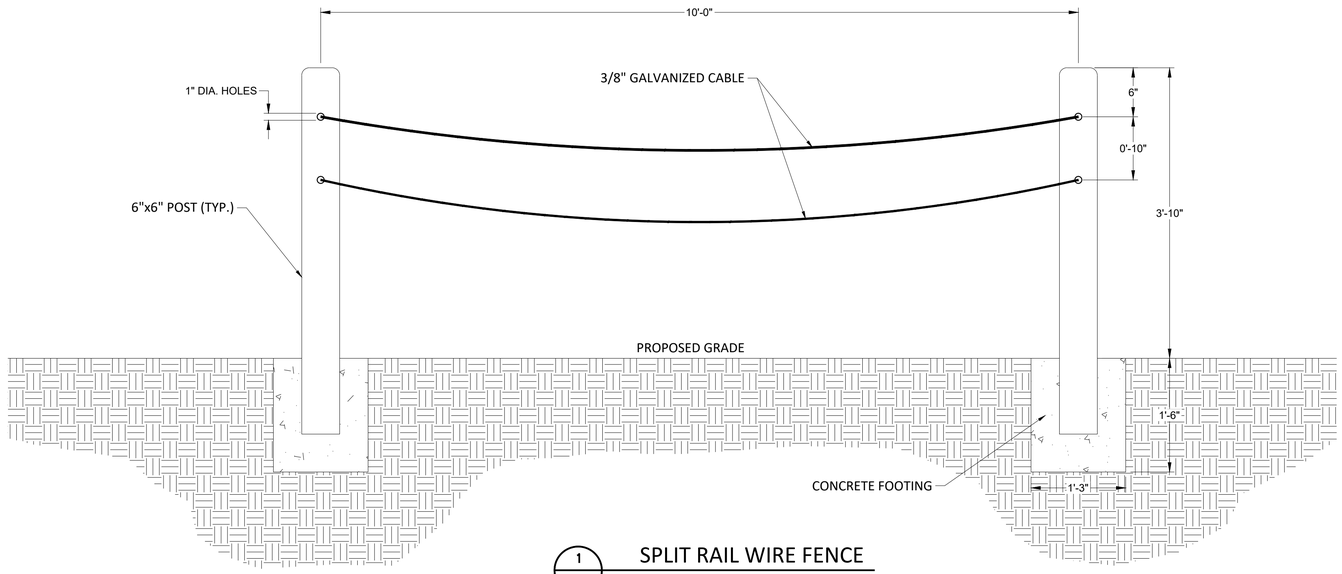

1 – SPLIT RAIL WIRE FENCE
NTS

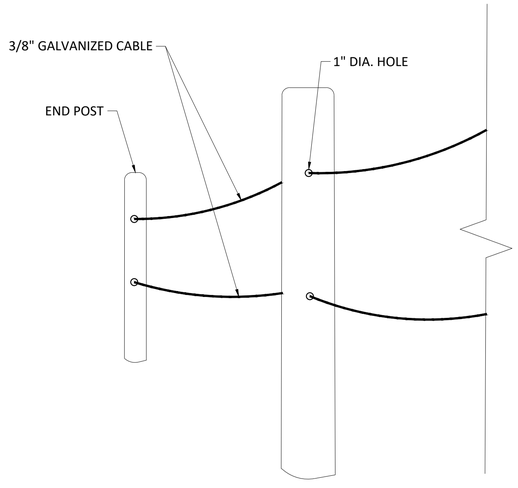

2 – ISOMETRIC VIEW
NTS

NOTES:
1. ALL WOOD FOR SPLIT RAIL WIRE FENCE SHALL BE PRESSURE TREATED.
2. END POST SHALL BE TERMINAL POST.

ISSUED FOR BID

Freese and Nichols, Inc.
Texas Registered Engineering Firm F-2144

STATE OF TEXAS
BRYCE EARL TODD
145856
LICENSED
PROFESSIONAL ENGINEER
08/13/2024

FREESE AND NICHOLS
10431 Morado Circle, Suite 300
Austin, Texas 78759
Phone - (512) 617-3100
Web - www.freese.com

CITY OF LAGO VISTA
EFLLUENT POND #17 REPAIRS AND
POND #2 IMPROVEMENTS
CIVIL
FENCE DETAILS

F&N JOB NO.	LGV23021
DATE	8/13/2024
DESIGNED	BET
DRAWN	MG
CHECKED	JJG
APPROVED	HGO
FILE NAME	

NO.	ISSUE	BY	DATE

VERIFY SCALE 0 1
Bar is one inch on original drawing. If not one inch on this sheet, adjust scale.

SHEET C-21
SEQ. 25 OF 37

ACAD Rel: 24.2s (LMS Tech)
Filename: N:\WRD\Drawings\CV-DET-FENCE.dwg
Last Saved: 8/5/2024 8:39 AM Saved By: 03675

Plot Date: 8/13/2024 1:13 PM Plot By: 02945 Filename: N:\WRD\Drawings\CV-DET-FENCE.dwg

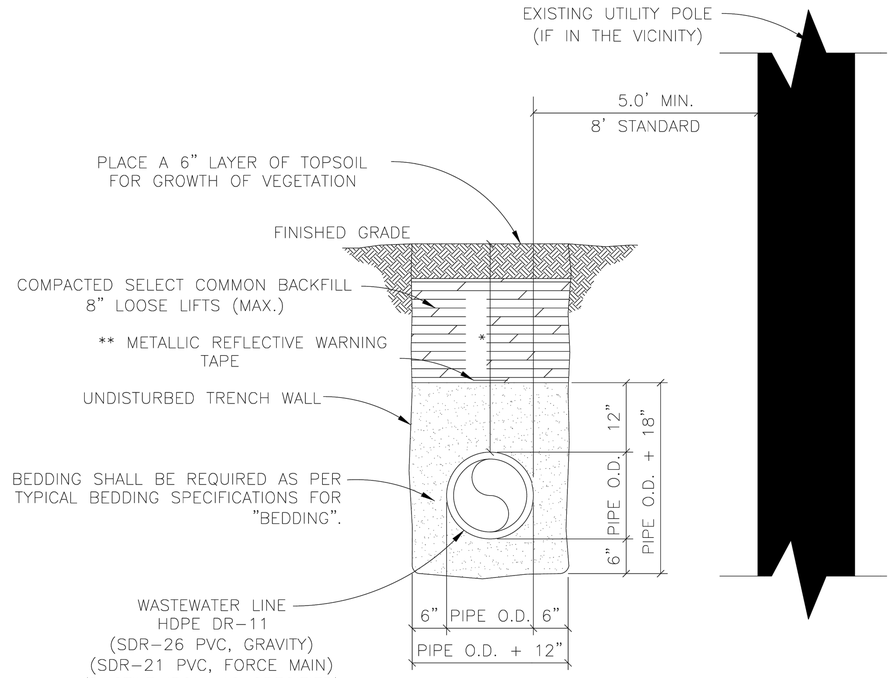

* SEWER PIPE LESS THAN 4" DIA. DEPTH: 30"
PIPES MORE THAN 6" DIA DEPTH: 36".

** REFLECTIVE WARNING TAPE SHALL INDICATE "PRESSURIZED WASTEWATER" FOR PRESSURE LINES IN AT LEAST 1.5" LETTERS CONTINUOUSLY REPEATED. REFLECTIVE WARNING TAPE SHALL INDICATE "BURIED SEWER LINE BELOW" FOR GRAVITY SEWER LINES.

SCALE: NOT TO SCALE

The City of Lago Vista, Texas

CITY OF LAGO VISTA
5803 THUNDERBIRD
LAGO VISTA, TX 78645
PH: (512) 267-1155

These documents were prepared by, or under the supervision of:

ERIC BELAJ 107148 February 3, 2019
Engineer's Name PE# Date

Engineer's Signature

SECTION
WASTEWATER

DETAIL NO.
WW-1

TITLE
EMBEDMENT UNDER UNPAVED AREAS

NOTES:
1. BEDDING MATERIAL SHALL CONFORM TO THE GRADATION REQUIREMENTS OF NO. 57 OR NO. 67 STONE AS SHOWN IN SPECIFICATION 03 30 00.

Freese and Nichols, Inc.
Texas Registered Engineering Firm F-2144

STATE OF TEXAS · ERIC BELAJ · 145856 · LICENSED PROFESSIONAL ENGINEER · 08/13/2024

FREESE NICHOLS
10431 Morado Circle, Suite 300
Austin, Texas 78759
Phone - (512) 617-3100
Web - www.freese.com

CITY OF LAGO VISTA
EFFLUENT POND #17 REPAIRS AND POND #2 IMPROVEMENTS
CIVIL
TRENCH DETAILS

F&N JOB NO.	LGV23021	APPROVED	HGO
DATE	8/13/2024	CHECKED	JJG
DESIGNED	BET	DRAWN	MG

NO.	ISSUE	BY	DATE

FILE NAME

VERIFY SCALE 0 1 — Bar is one inch on original drawing. If not one inch on this sheet, adjust scale.

SHEET C-22

SEQ. 26 OF 37

ISSUED FOR BID

ACAD Rel: 24.2s (LMS Tech)
Filename: N:\WRD\Drawings\CV-DET-TRENCH.dwg
Last Saved: 8/2/2024 4:33 PM Saved By: 02945

Plot Date: 8/13/2024 1:13 PM Plot By: 02945 Filename: N:\WRD\Drawings\CV-DET-TRENCH.dwg

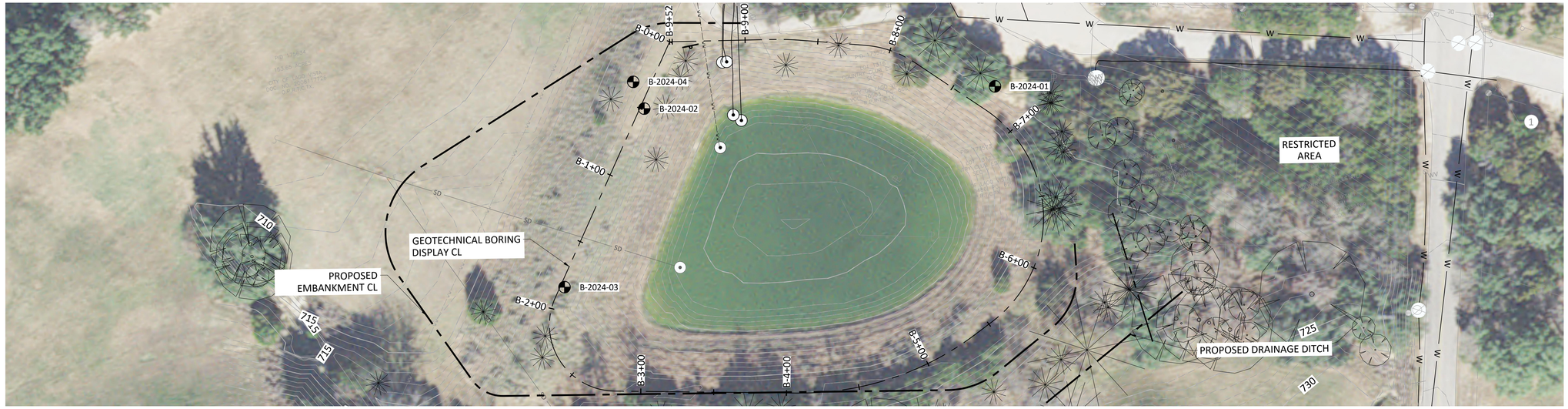

GEOTECHNICAL BORING PLAN VIEW

NORTH

0 40 80
SCALE IN FEET

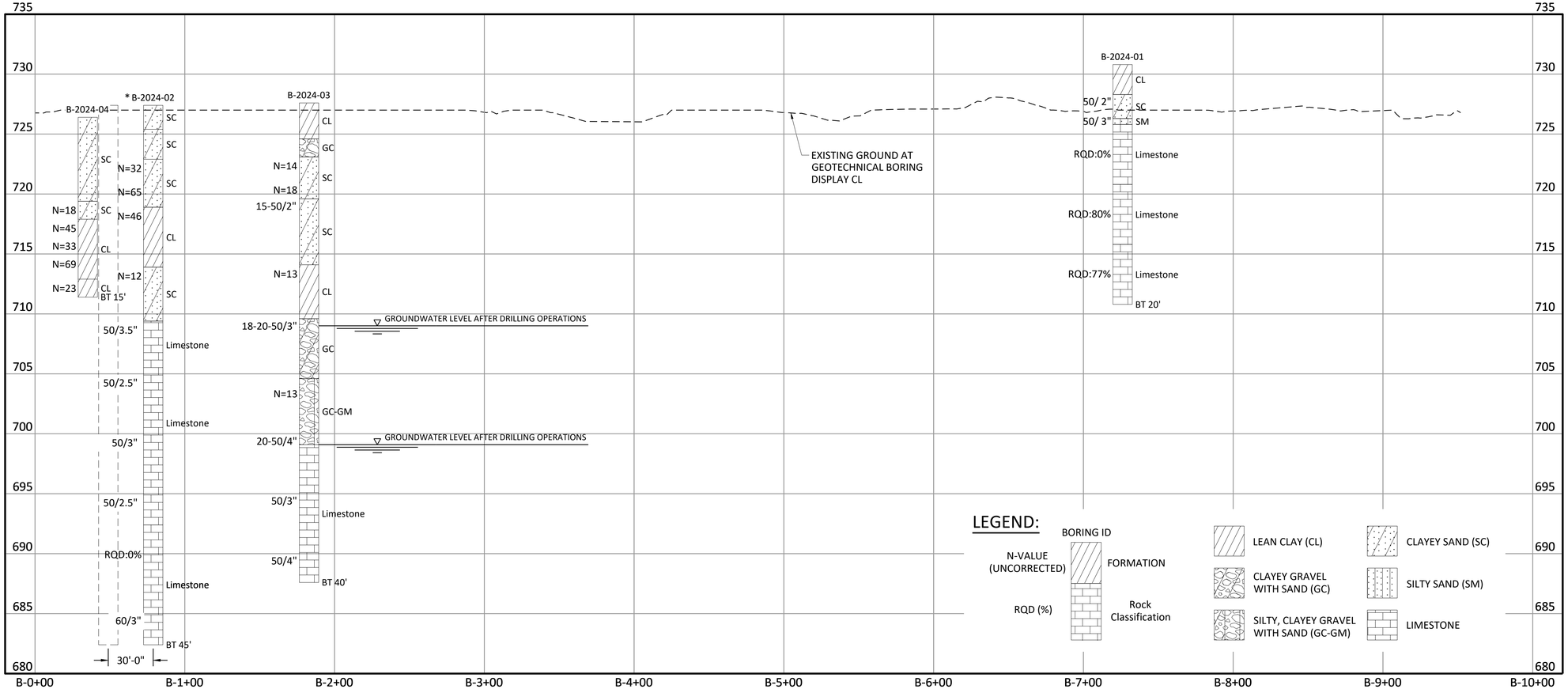

* NOTE: BORING B-2024-02 OFFSET 30' RIGHT IN PROFILE FOR CLARITY.

PROFILE ALONG GEOTECHNICAL BORING DISPLAY CENTERLINE

0 40' 80'
SCALE IN FEET
HORIZONTAL

0 5' 10'
SCALE IN FEET
VERTICAL

NOTES:

1. REFER TO REPORT NO. AG 23 10155 PRODUCED BY HVJ SOUTH CENTRAL TEXAS - M&J, INC. IN JUNE 2024 FOR DETAILED INFORMATION ABOUT THE BORING LOGS SHOWN ON THIS SHEET.

ISSUED FOR BID

Freese and Nichols, Inc.
Texas Registered Engineering Firm F-2144

STATE OF TEXAS
BRYCE EARL TODD
145856
LICENSED
PROFESSIONAL ENGINEER
08/13/2024

FREESE AND NICHOLS
10431 Morado Circle, Suite 300
Austin, Texas 78759
Phone - (512) 617-3100
Web - www.freese.com

CITY OF LAGO VISTA
EFLLUENT POND #17 REPAIRS AND POND #2 IMPROVEMENTS
CIVIL
POND #2 GEOTECHNICAL BORING PLAN AND PROFILE

F&N JOB NO.	LGV23021
DATE	8/13/2024
DESIGNED	BET
DRAWN	MG
CHECKED	JJG
APPROVED	HGO

NO.	ISSUE	BY	DATE

FILE NAME

VERIFY SCALE 0 1
Bar is one inch on original drawing. If not one inch on this sheet, adjust scale.

SHEET C-23
SEQ. 27 OF 37

ACAD Rel: 24.2s (LMS Tech)
Filename: N:\WRD\Drawings\CV-PD2 PLPR-BORING.dwg
Last Saved: 7/17/2024 7:25 AM Saved By: 08354

Plot Date: 8/13/2024 1:13 PM Plot By: 02945 Filename: N:\WRD\Drawings\CV-PD2 PLPR-BORING.dwg

CONTROL POINT TABLE (GRID)				
POINT ID	DESCRIPTION	NORTHING	EASTING	ELEVATION
3	5/8" REBAR W/ ALUMINUM CAP SET	10135428.2470	3032032.2440	729.1430
4	5/8" REBAR W/ ALUMINUM CAP SET	10135284.7300	3031956.0630	735.4180

CANYON OAKS DR
EXISTING CULVERT
SLOPE TRANSITIONS FROM 1H:1V TO 2.5H:1V
1 C-26
EXISTING 16" DIP BYPASS LINE TO REMAIN
EXISTING 30" LINE TO REMAIN
EXISTING 10" FILL LINE TO REMAIN
EXISTING DRAINAGE DITCH TO REMAIN
APPROXIMATE TOE OF INTERIOR SLOPE
2.5H:1V
EXISTING TOP OF EMBANKMENT EL. 721.0
715
720
EXISTING INTAKE TOWER TO REMAIN
SLOPE TRANSITIONS FROM 1H:1V TO 2.5H:1V
EXISTING ELECTRICAL EQUIPMENT
TERMINATION OF 16" DIP BYPASS LINE. SEE NOTE 5.
EXISTING PUMP STATION TO REMAIN
EXISTING 12" DISCHARGE LINE TO REMAIN
2 C-26
REMOVE AND DISPOSE OF THE EXISTING POND LINER SYSTEM. SEE NOTE 2, THIS SHEET.
EXISTING FENCELINE TO REMAIN
1H:1V
EXISTING CONCRETE STAIRCASE WITH BOLTED CONNECTIONS FOR THE LINER
EXISTING CULVERT
LIMITS OF DEMOLITION
EXISTING CONCRETE STAIRCASE WITH BOLTED CONNECTIONS FOR THE LINER
EXISTING 8" PRESSURE LINE TO REMAIN
SITE ACCESS POINT
COUNTRY CLUB DR
3
4

NOTES:

1. BEFORE ANY WORK CAN BEGIN AT POND #2 OR POND #17, CONTRACTOR SHALL COORDINATE WITH THE CITY OF LAGO VISTA TO FIELD VERIFY AND TEST THE BYPASS PIPING SYSTEM SURROUNDING POND #17. THIS SYSTEM SHOULD TRANSFER FLOW BETWEEN POND #17, POND #2, AND THE EXISTING CEDAR BREAKS EFFLUENT HOLDING POND.
2. BASED ON BEST AVAILABLE INFORMATION, EXISTING REINFORCED CONCRETE SLOPE PAVING ("CONCRETE COLLAR") MATERIAL IS PRESENT ON THE STEEPEST (1H:1V) SLOPES OF POND #17. THE SLOPE PAVING IS UNDERSTOOD TO BE BENEATH THE EXISTING POND LINER SYSTEM ON THE STEEPEST SLOPES, AND TO EXTEND FROM THE CREST OF THE POND TO ITS TOE. THE PAVING IS 4" THICK AND CONTAINS NO. 3 REINFORCEMENT BARS ON 18" CENTERS EACH WAY.
3. DEMOLITION WORK AT POND #17 CONSISTS OF THE REMOVAL AND DISPOSAL, AT A LANDFILL, OF THE ENTIRE EXISTING POND LINER SYSTEM. BASED ON AVAILABLE INFORMATION, THE EXISTING LINER SYSTEM AT POND #17 CONSISTS OF A 40-MIL THICK SCRIM-REINFORCED GEOMEMBRANE OVER A 6-OZ FABRIC. THE EXISTING CONCRETE SLOPE PAVING IS TO REMAIN. SEE NOTES ON POND #17 TYPICAL SECTIONS SHEET FOR MORE INFORMATION ABOUT THE EXISTING SLOPE PAVING.
4. REMOVE THE STAINLESS STEEL BAR AT THE CONCRETE STAIRCASES WHEN REMOVING THE HDPE LINER.
5. 16" BYPASS LINE IS ASSUMED TO TERMINATE AT THE WET WELL UNDERNEATH THE PUMP HOUSE. CONTRACTOR SHALL FIELD VERIFY THE SYSTEM IS OPERATIONAL AND PROVIDE RECOMMENDATIONS IF A DIFFERENT CONDITION IS ENCOUNTERED.
6. 6. CONTRACTOR SHALL BE RESPONSIBLE FOR REMOVING AND DISPOSING OF ALL TREES, SHRUBS, AND OTHER WOODED VEGETATION ON THE EMBANKMENT AND BETWEEN THE EMBANKMENT AND THE FENCE LINE.

NORTH
0 40' 80'
SCALE IN FEET

ISSUED FOR BID

Freese and Nichols, Inc.
Texas Registered Engineering Firm F-2144

STATE OF TEXAS · 145856 · LICENSED PROFESSIONAL ENGINEER · 08/13/2024

FREESE NICHOLS
10431 Morado Circle, Suite 300
Austin, Texas 78759
Phone - (512) 617-3100
Web - www.freese.com

CITY OF LAGO VISTA
EFFLUENT POND #17 REPAIRS AND
POND #2 IMPROVEMENTS
CIVIL
POND #17 EXISTING CONDITIONS

F&N JOB NO.	LGV23021
DATE	8/13/2024
DESIGNED	BET
DRAWN	MG
CHECKED	JJG
APPROVED	HGO

NO.	ISSUE	BY	DATE

FILE NAME

VERIFY SCALE Bar is one inch on original drawing. If not one inch on this sheet, adjust scale.
0 1

SHEET C-24
SEQ. 28 OF 37

ACAD Rel: 24.2s (LMS Tech)
Filename: N:\WRD\Drawings\CV-PD17- EX-COND.dwg
Last Saved: 7/29/2024 1:19 PM Saved By: 08354

Plot Date: 8/13/2024 1:13 PM Plot By: 02945 Filename: N:\WRD\Drawings\CV-PD17- EX-COND.dwg

NOTES/SEQUENCE OF WORK:

1. DRAIN POND #17 BY BYPASSING EFFLUENT FLOWS FROM THE WASTE WATER TREATMENT PLANT TO THE COMPLETED POND #2 AND THE EXISTING CEDAR BREAKS EFFLUENT HOLDING POND. POND #17 SHALL BE DRAINED SLOWLY TO AVOID DIFFERENTIAL HEAD BUILDUP IN THE SIDE SLOPES. THIS SHOULD BE COORDINATED WITH THE CITY OF LAGO VISTA. THE CITY WILL RETAIN CONTROL OF THE WASTE WATER TREATMENT PLANT.
2. REMOVE AND DISPOSE OF SOLID WASTE, IF ANY, REMAINING IN POND #17 AFTER IT HAS BEEN DRAINED.
3. REMOVE AND DISPOSE OF THE EXISTING POND LINER SYSTEM.
4. INSPECT AND REPAIR (IF NECESSARY) THE EXISTING UNDERDRAIN SYSTEM OF POND #17. CONTRACTOR SHALL PERFORM A CCTV SURVEY OF THE UNDERDRAIN PIPES TO DETERMINE WHERE REPAIRS MAY BE NECESSARY.
5. INSPECT AND REPAIR (IF NECESSARY) THE REINFORCED CONCRETE SLOPE PAVING.
6. INSPECT AND REPAIR (IF NECESSARY) SUBGRADE ALONG SIDE SLOPES AND THE BOTTOM OF THE POND.
7. INSTALL PROPOSED HDPE GEONET AND GEOMEMBRANE LINER SYSTEM (SEE LINER DETAILS SHEET).
8. AT THE EXISTING STAIRCASES, CUT THE BOLTS FLUSH WITH THE EXISTING CONCRETE. INSTALL NEW BOLTS AND STAINLESS STEEL PLATES IN ACCORDANCE WITH THE DETAILS ON C-13. BOLTS SHALL BE DRILLED IN MINIMUM OF 2" AND SECURED WITH HILTI EPOXY RE 500.
9. INSTALL FIBER-REINFORCED SHOTCRETE ACCORDING TO DETAILS ON C-26.

NORTH

0 40' 80'

SCALE IN FEET

ISSUED FOR BID

Freese and Nichols, Inc.
Texas Registered Engineering Firm F-2144

STATE OF TEXAS — 145856 — LICENSED PROFESSIONAL ENGINEER — JOSEPH G. GOLD
Released for Construction 08/13/2024

FREESE NICHOLS
10431 Morado Circle, Suite 300
Austin, Texas 78759
Phone - (512) 617-3100
Web - www.freese.com

CITY OF LAGO VISTA
EFFLUENT POND #17 REPAIRS AND POND #2 IMPROVEMENTS
CIVIL
POND #17 PROPOSED PLAN

F&N JOB NO.	LGV23021
DATE	8/13/2024
DESIGNED	BET
DRAWN	MG
CHECKED	JJG
APPROVED	HGO

NO.	ISSUE	BY	DATE

FILE NAME

VERIFY SCALE 0 1
Bar is one inch on original drawing. If not one inch on this sheet, adjust scale.

SHEET C-25

SEQ. 29 OF 37

ACAD Rel: 24.2s (LMS Tech)
Filename: N:\WRD\Drawings\CV-PD17-PL-PROP.dwg
Last Saved: 7/29/2024 1:54 PM Saved By: 08354

Plot Date: 8/13/2024 1:13 PM Plot By: 02945 Filename: N:\WRD\Drawings\CV-PD17-PL-PROP.dwg

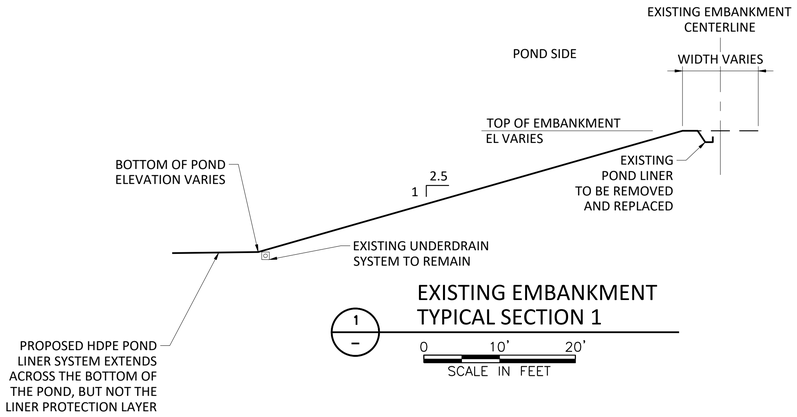

1 – EXISTING EMBANKMENT TYPICAL SECTION 1

0 10' 20'

SCALE IN FEET

EXISTING EMBANKMENT NOTES:

1. ELEVATION OF THE TOP OF EMBANKMENT VARIES BETWEEN 721.3' AND 722.2'. ELEVATION OF THE POND BOTTOM VARIES BETWEEN 699.0' AND 703.0'
2. RECORD DRAWINGS INDICATE A TOP OF EMBANKMENT WIDTH OF 10', FIELD CONDITIONS MAY VARY.
3. INTERIOR SLOPE VARIES BETWEEN 1H:1V AND 2.5H:1V. BASED ON BEST AVAILABLE INFORMATION, THE APPROXIMATELY 4" THICK CONCRETE SLOPE PAVING ("CONCRETE COLLAR") ONLY EXISTS ON 1H:1V SLOPES.
4. CONTRACTOR SHALL REMOVE ALL EXISTING POND LINER SYSTEM FROM POND #17.
5. THE CONCRETE SLOPE PAVING ON 1H:1V SLOPES IS TO REMAIN. UPON REMOVAL OF THE EXISTING POND LINER SYSTEM, CONTRACTOR SHALL INSPECT THE CONCRETE SLOPE PAVING FOR DAMAGE. ANY CONCRETE SLOPE PAVING DAMAGED BY THE CONTRACTOR DURING THE REMOVAL OF THE GEOMEMBRANE SHALL BE REPAIRED BY THE CONTRACTOR AT NO ADDITIONAL COST TO THE CITY OF LAGO VISTA. ALL OTHER CONCRETE SLOPE PAVING REPAIRS WILL BE PAID AT THE AGREED UPON BID PRICE.
6. THE UNDERDRAIN SYSTEM FOR POND #17 IS TO REMAIN. CONTRACTOR SHALL PERFORM A VIDEO SURVEY OF THE SYSTEM. IF THERE ARE DAMAGED SECTIONS OF THE UNDERDRAIN SYSTEM, PERFORM REPAIRS ACCORDING TO THE DETAILS ON SHEET C-27.
7. SEE SHEET R-1 FOR LOCATIONS, DIMENSIONS, AND MATERIAL TYPE OF THE GEOCOMPOSITE STRIP DRAINS. IF STRIP DRAINS ARE DAMAGED BY THE CONTRACTOR DURING THE REMOVAL OF THE EXISTING POND LINER SYSTEM, CONTRACTOR SHALL REPLACE THE STRIP DRAIN(S) OF THE SAME OR SIMILAR MATERIAL AT NO COST TO THE CITY OF LAGO VISTA.

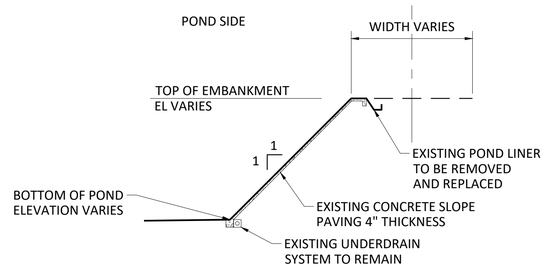

2 – EXISTING EMBANKMENT TYPICAL SECTION 2

0 10' 20'

SCALE IN FEET

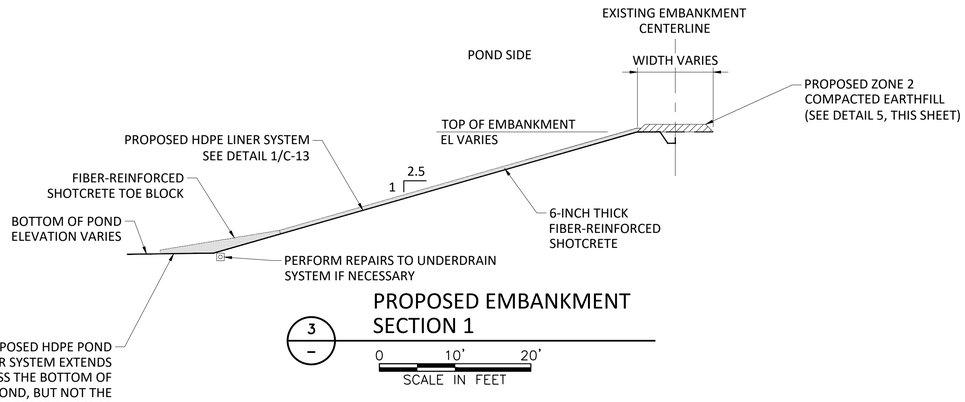

3 – PROPOSED EMBANKMENT SECTION 1

0 10' 20'

SCALE IN FEET

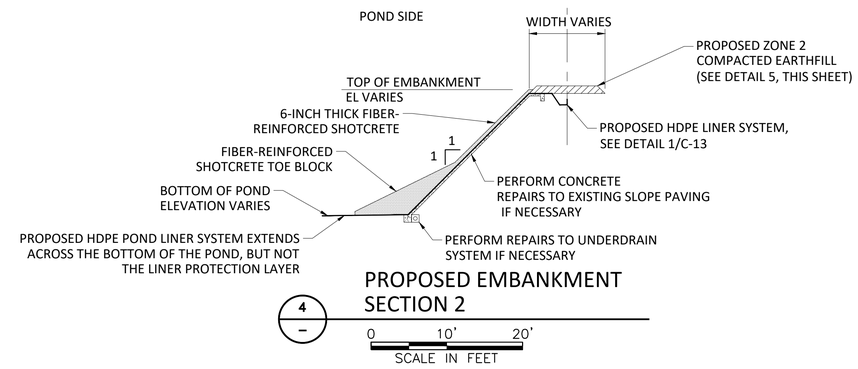

4 – PROPOSED EMBANKMENT SECTION 2

0 10' 20'

SCALE IN FEET

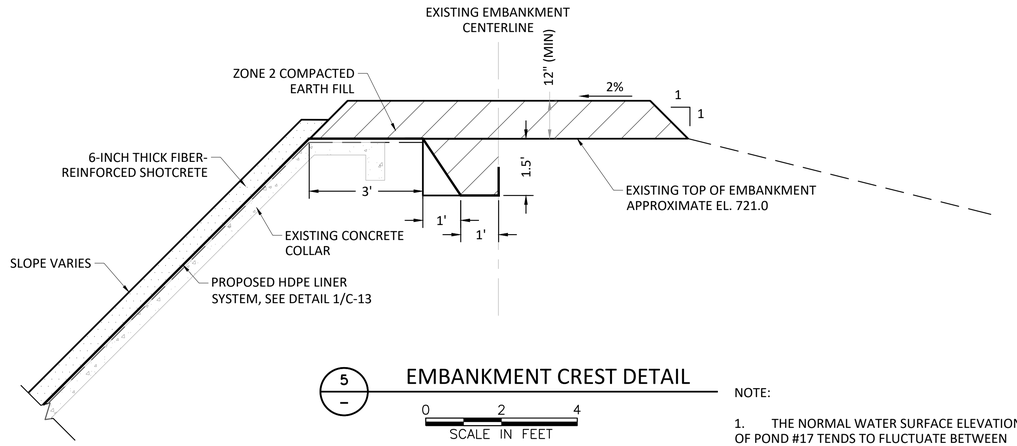

5 – EMBANKMENT CREST DETAIL

0 2 4

SCALE IN FEET

NOTE:

1. THE NORMAL WATER SURFACE ELEVATION OF POND #17 TENDS TO FLUCTUATE BETWEEN 710-FEET AND 718-FEET.

ISSUED FOR BID

Freese and Nichols, Inc.
Texas Registered Engineering Firm F-2144
STATE OF TEXAS
145856
LICENSED PROFESSIONAL ENGINEER
08/13/2024
FREESE NICHOLS
10431 Morado Circle, Suite 300
Austin, Texas 78759
Phone - (512) 617-3100
Web - www.freese.com

CITY OF LAGO VISTA
EFFLUENT POND #17 REPAIRS AND POND #2 IMPROVEMENTS
CIVIL

POND #17 TYPICAL SECTIONS

NO.	ISSUE	BY	DATE	FILE NAME

F&N JOB NO. LGV23021
DATE 8/13/2024
DESIGNED BET
DRAWN MG
CHECKED JJG
APPROVED HGO

VERIFY SCALE Bar is one inch on original drawing. If not one inch on this sheet, adjust scale.
0 1

SHEET C-26
SEQ. 30 OF 37

ACAD Rel: 24.2s (LMS Tech)
Filename: N:\WRD\Drawings\CV-PD17-DET-LNR.dwg
Last Saved: 8/5/2024 8:28 AM Saved By: 03675
Plot Date: 8/13/2024 1:13 PM Plot By: 02945 Filename: N:\WRD\Drawings\CV-PD17-DET-LNR.dwg

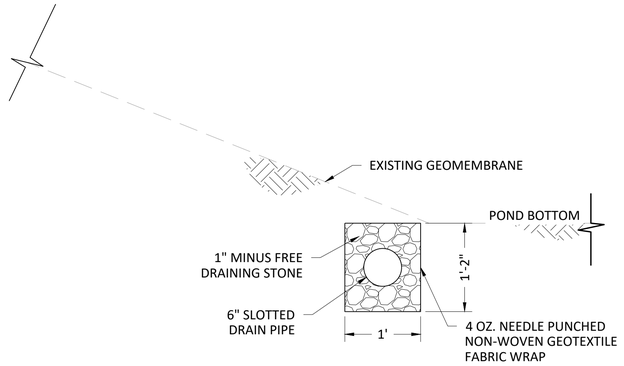

1 - POND #17 EXISTING UNDERDRAIN AT 2.5H:1V

0 1' 2'
SCALE IN FEET

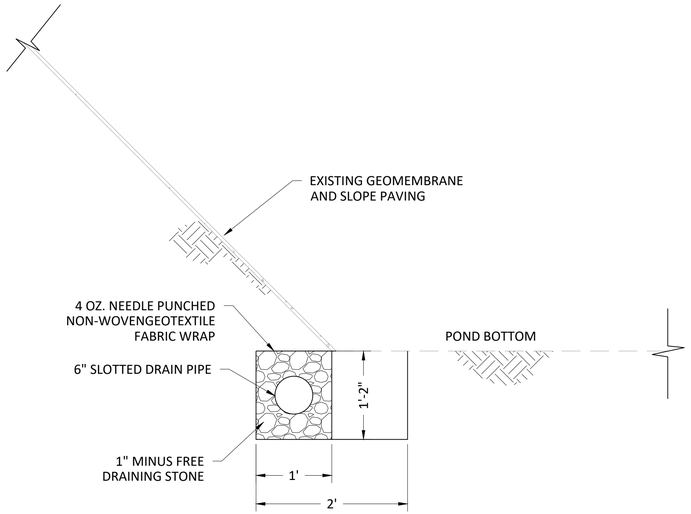

2 - POND #17 EXISTING UNDERDRAIN AT 1H:1V

0 1' 2'
SCALE IN FEET

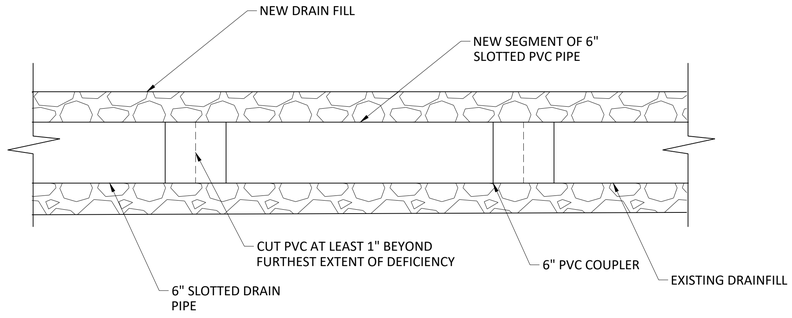

3 - POND #17 UNDERDRAIN REPAIR-BROKEN PIPE (PLAN)

NOT TO SCALE

NOTES:

1. REFER TO SHEET G-2 FOR CONSTRUCTION SEQUENCING NOTES AND THE UNDERDRAIN CCTV INSPECTION.
2. UNCOVER AREAS OF THE UNDERDRAIN SYSTEM WHERE A BROKEN PVC PIPE IS LOCATED.
3. REMOVE THE EXISTING EARTHFILL, GEOTEXTILE, AND DRAINFILL MATERIAL AROUND THE AREA OF THE BROKEN PIPE. STOCKPILE EARTHFILL AND DRAINFILL FOR REUSE. REMOVE ENOUGH MATERIAL TO PERFORM THE WORK IN NOTE 6 AND 7.
4. CUT THE PVC PIPE 1", AT A MINIMUM, BEYOND THE FURTHEST EXTENT OF THE DEFICIENCY (CRACKED PIPE, BROKEN OR MISSING PIECE OF PIPE, ETC.).
5. REMOVE AND DISPOSE OF THE DEFICIENT PIPE.
6. INSERT A 6" PVC COUPLER AT EACH CUT LOCATION. COUPLERS SHALL BE INSTALLED WITH PVC PURPLE PRIMER AND PVC CEMENT.
7. INSERT A NEW 6" SLOTTED PVC PIPE (CUT TO SIZE) INTO THE PVC COUPLERS. 6" SLOTTED PVC PIPE SHALL BE THE SAME MATERIAL SHOWN IN DETAIL 6 ON SHEET C-11. PVC PIPE SHALL BE INSTALLED WITH PVC PURPLE PRIMER AND PVC CEMENT.
8. INSTALL A NEW GEOTEXTILE AT THE EXPOSED LOCATIONS OF DRAINFILL.
9. COMPACT DRAINFILL ON TOP OF REPAIRED PIPE SECTION AND ANY OTHER AREAS WHERE DRAINFILL WAS REMOVED. REPAIRED SECTIONS OF THE UNDERDRAIN SHALL RESEMBLE DETAILS 1 AND 2.
10. COMPACT EARTHFILL ON TOP OF REPAIRED AREA. REPAIRED AREAS SHALL RESEMBLE DETAILS 1 AND 2.
11. DETAIL APPLIES TO ALL OF POND #17. IF AN UNDERDRAIN REPAIR IS NEEDED ON THE 1H:1V SLOPE, CONTRACTOR SHALL PARTIALLY DEMOLISH THE CONCRETE SLOPE PAVING, PERFORM THE REPAIR, AND REPLACE THE CONCRETE SLOPE PAVING.

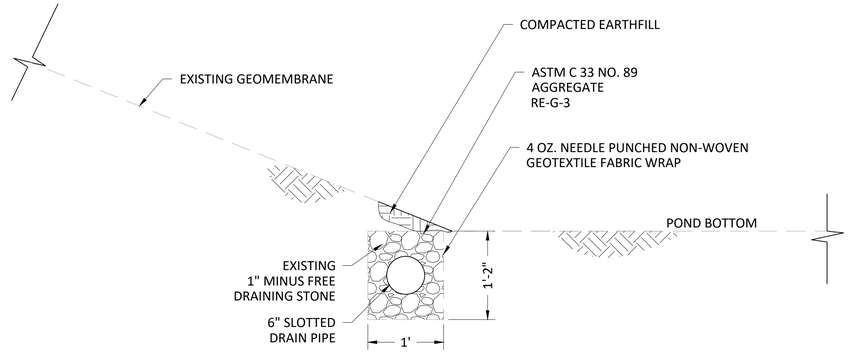

4 - POND #17 UNDERDRAIN REPAIR-DRAINFILL VOID (PROFILE)

0 1' 2'
SCALE IN FEET

NOTES:

1. REFER TO SHEET G-2 FOR CONSTRUCTION SEQUENCING NOTES AND THE UNDERDRAIN CCTV INSPECTION.
2. IF VOIDS ARE PRESENT AFTER THE REMOVAL OF THE EXISTING GEOMEMBRANE, COMPACT DRAINFILL AND/OR EARTHFILL TO RESEMBLE DETAILS 1 AND 2.

ISSUED FOR BID

Freese and Nichols, Inc.
Texas Registered Engineering Firm F-2144

STATE OF TEXAS
145856
ENGINEER
JOSHUA GOLD
08/13/2024

FREESE NICHOLS
10431 Morado Circle, Suite 300
Austin, Texas 78759
Phone - (512) 617-3100
Web - www.freese.com

CITY OF LAGO VISTA
EFFLUENT POND #17 REPAIRS AND
POND #2 IMPROVEMENTS
CIVIL

POND #17 UNDERDRAIN REPAIR DETAILS

NO.	ISSUE	BY	DATE

FILE NAME

F&N JOB NO.	LGV23021
DATE	8/13/2024
DESIGNED	BET
DRAWN	MG
CHECKED	JJG
APPROVED	HGO

Bar is one inch on original drawing. If not one inch on this sheet, adjust scale.
VERIFY SCALE 0 1

SHEET C-27
SEQ. 31 OF 37

ACAD Rel: 24.2s (LMS Tech)
Filename: N:\WRD\Drawings\CV-PD17-DET-UNDRN-REP.dwg
Last Saved: 7/17/2024 7:45 AM Saved By: 08354

Plot Date: 8/13/2024 1:14 PM Plot By: 02945 Filename: N:\WRD\Drawings\CV-PD17-DET-UNDRN-REP.dwg

GENERAL NOTES

1. DESIGN IS IN ACCORDANCE WITH 2015 INTERNATIONAL BUILDING CODE (IBC), LOCAL AMENDMENTS, AND APPLICABLE CODE REFERENCED STANDARDS.

2. CONSTRUCTION ACTIVITIES SHALL BE IN ACCORDANCE WITH APPLICABLE OSHA, STATE, AND LOCAL REGULATIONS. THIS DESIGN IS NOT INTENDED TO CONFLICT WITH SAFETY OR APPLICABLE REGULATIONS OR TO RELIEVE THE CONTRACTOR OF COMPLIANCE WITH THESE REQUIREMENTS. IN CASE OF CONFLICT WITH SAFETY OR APPLICABLE REGULATIONS, CONTACT THE ENGINEER FOR GUIDANCE BEFORE PROCEEDING WITH FABRICATION OR CONSTRUCTION.

3. PRIOR TO FABRICATION OR CONSTRUCTION:
   A. REVIEW OTHER DISCIPLINE DRAWINGS FOR SIZE AND LOCATION OF ALL OPENINGS, DEPRESSIONS, OFFSETS, SLEEVES, CURBS, PADS, INSERTS, EQUIPMENT REQUIREMENTS, ETC., WHICH ARE NOT SHOWN ON STRUCTURAL DRAWINGS.
   B. VERIFY DIMENSIONS AND LOCATIONS OF ALL OPENINGS, DEPRESSIONS, OFFSETS, SLEEVES, CURBS, PADS, INSERTS, EQUIPMENT REQUIREMENTS, ETC.
   C. FIELD VERIFY ALL EXISTING CONDITIONS, INCLUDING LOCATION AND DIMENSIONS OF ALL EXISTING CONSTRUCTION AND UTILITIES.
   D. NOTIFY OWNER'S REPRESENTATIVE OF ANY DISCREPANCIES BETWEEN DISCIPLINES, CONSTRUCTABILITY ISSUES, OR EXISTING CONDITIONS.

4. REMOVE ALL ABANDONED FOUNDATIONS, UTILITIES, PIPELINES, ETC. THAT INTERFERE WITH NEW CONSTRUCTION.

5. PROVIDE EXCAVATION SHORING TO PROTECT AND SUPPORT FOUNDATION SOILS UNDER EXISTING STRUCTURES.

6. THE STRUCTURES ARE DESIGNED FOR STABILITY IN THE FINAL CONDITION ONLY. PROVIDE TEMPORARY BRACING AND SHORING AS REQUIRED FOR STABILITY DURING CONSTRUCTION.

7. PLANS, SECTIONS, AND DETAILS ARE NOT TO BE SCALED FOR DETERMINATION OF QUANTITIES, LENGTHS, OR FIT OF MATERIALS.

8. THE GENERAL NOTES AND TYPICAL DETAILS ARE GENERAL AND APPLY TO THE ENTIRE PROJECT EXCEPT WHERE THERE ARE SPECIFIC INDICATIONS TO THE CONTRARY.

9. SUBSTITUTION OF EXPANSION ANCHORS FOR CAST-IN-PLACE ANCHORS OR POST-INSTALLED ADHESIVE ANCHORS SHOWN ON THE DRAWINGS WILL NOT BE PERMITTED UNLESS APPROVED BY THE ENGINEER IN ADVANCE.

10. SUPPLY ALL ITEMS FOR ATTACHING MECHANICAL AND ELECTRICAL EQUIPMENT TO THE STRUCTURE TO RESIST ALL LOADS INCLUDING SEISMIC FORCES. ATTACHMENT SHALL BE MADE SO AS NOT TO OVERSTRESS STRUCTURAL MEMBERS. COORDINATE THE ATTACHMENTS AND LOCATIONS OF THE EQUIPMENT WITH THE STRUCTURAL SHOP DRAWINGS.

FOUNDATION

1. EXCAVATION DESIGN AND SAFETY IS THE RESPONSIBILITY OF THE CONTRACTOR. ANY SLOPES SHOWN ARE A MAXIMUM AND SHALL BE DECREASED AS REQUIRED FOR SAFETY OR TO MEET OSHA REQUIREMENTS.

2. EXCAVATION, SUBGRADE PREPARATION, AND BACKFILL FOR CONCRETE PIPE ENCASEMENT, INLET STRUCTURE, AND OUTLET STRUCTURE:
   A. EXCAVATE THE SITE TO THE PROPOSED FINISHED SUBGRADE WHERE CUTTING TO SUBGRADE IS REQUIRED. EXTEND THE LATERAL LIMITS OF THE EXCAVATION 2'-0" MINIMUM BEYOND THE PERIMETER OF THE FOUNDATION, UNLESS NOTED OTHERWISE.
   B. THE FOUNDATIONS WILL BEAR ON OR WITHIN THE HARD, WEATHERED TO SLIGHTLY WEATHERED LIMESTONE. PLACE A MINIMUM 3" MUD SLAB THE SAME DAY THE FINAL EXCAVATION IS COMPLETED. IF THE TOP OF THE WEATHERED TO SLIGHTLY WEATHERED LIMESTONE IS BELOW THE BOTTOM OF THE FOUNDATION, THEN OVER EXCAVATE TO EXPOSE TOP OF LIMESTONE, PLACE MUD SLAB, AND BACKFILL WITH FLOWABLE FILL (CLSM) TO BOTTOM OF FOUNDATION.
   C. BACKFILL MATERIAL SHALL BE IN ACCORDANCE WITH THE PROJECT SPECIFICATIONS. BACKFILL MATERIAL SHALL BE PLACED IN ACCORDANCE WITH THE PROJECT SPECIFICATIONS.
   D. CONTROLLED LOW STRENGTH MATERIAL (CLSM) FILL SHALL BE PLACED IN ACCORDANCE WITH THE PROJECT SPECIFICATIONS.
   E. IN-PLACE FIELD DENSITY TESTS SHALL BE PERFORMED IN ACCORDANCE WITH THE PROJECT SPECIFICATIONS.
   F. THE SUBGRADE MOISTURE CONTENT AND DENSITY SHALL BE MAINTAINED DURING CONSTRUCTION.

3. ALLOWABLE DESIGN BEARING PRESSURE IS 15,000 PSF FOR FOUNDATIONS BEARING ON UNDISTURBED, HARD, WEATHERED TO SLIGHTLY WEATHERED LIMESTONE. FOUNDATIONS SHALL BEAR ON SOUND AND LEVEL EXCAVATIONS. REMOVE ANY AND ALL LOOSE DEBRIS FROM EXPOSED BEARING SURFACE. SUITABLE BEARING MATERIALS SHALL BE VERIFIED BY A LICENSED GEOTECHNICAL ENGINEER.

4. DO NOT BACKFILL FOUNDATION WALLS UNTIL CONCRETE HAS REACHED ITS SPECIFIED 28-DAY COMPRESSIVE STRENGTH OR 7 DAYS, WHICHEVER IS LONGER, OR UNTIL THE RESTRAINING SLABS OR ADEQUATE BRACING ARE IN PLACE. DO NOT PERMIT ROLLERS TO OPERATE WITHIN 3'-0" OF THE STRUCTURES.

5. MUD SLABS, WHERE INDICATED, SHALL BE PLACED THE SAME DAY EXCAVATION IS COMPLETED. THE GEOTECHNICAL ENGINEER SHALL VERIFY THAT THE BEARING SURFACE IS FREE OF LOOSE AND/OR DELETERIOUS MATERIAL BEFORE PLACEMENT OF MUD SLAB.

CONCRETE AND REINFORCEMENT

1. CONCRETE CONSTRUCTION SHALL CONFORM TO THE LATEST EDITIONS OF ACI 350 AND ACI 318 AND US ARMY CORPS OF ENGINEERS EM 1110-2-2104.
2. ALL DETAILING, FABRICATION AND ERECTION OF REINFORCING BARS, UNLESS NOTED OTHERWISE, SHALL BE IN ACCORDANCE WITH THE MANUAL OF STANDARD PRACTICE FOR DETAILING REINFORCED CONCRETE STRUCTURES (ACI 315), LATEST EDITION.
3. CONCRETE SHALL HAVE A MINIMUM 28-DAY COMPRESSIVE STRENGTH OF 4,500 PSI UNLESS SPECIFIED OTHERWISE.

4. ALL REINFORCING SHALL BE IN ACCORDANCE WITH ASTM A615, GRADE 60, DEFORMED.

5. CONCRETE CLEAR COVER OVER REINFORCING SHALL BE AS NOTED BELOW, UNLESS NOTED OTHERWISE.
   A. CAST AGAINST AND PERMANENTLY EXPOSED TO EARTH: 3"
   B. ALL OTHER: 2"
   C. SEE DRAWINGS FOR EXCEPTIONS.

6. ALL EXPOSED EDGES OF CONCRETE SHALL BE CHAMFERED 3/4" INSIDE FORMS OR TOOLED TO 3/4" RADIUS ON SLABS UNLESS NOTED OTHERWISE.

7. ALL CONSTRUCTION JOINTS (CJ) SHALL BE THOROUGHLY CLEANED AND PURPOSELY ROUGHENED TO 1/4" AMPLITUDE PRIOR TO PLACING ADJACENT CONCRETE.

8. JOINTS IN EXPOSED CONCRETE, EXCEPT SLABS, SHALL BE USED WITH A MAXIMUM SPACING OF 45'-0". JOINTS IN BURIED AND UNEXPOSED CONCRETE, SHALL BE USED WITH A MAXIMUM SPACING OF 90 FEET.

9. ADDITIONAL CONSTRUCTION JOINTS SHALL HAVE PRIOR APPROVAL OF THE ENGINEER.

10. PENETRATIONS OTHER THAN SHOWN SHALL NOT BE ALLOWED WITHOUT PRIOR APPROVAL FROM THE ENGINEER.

11. IN CASES WHERE REINFORCING BARS CANNOT BE EXTENDED AS FAR AS REQUIRED DUE TO THE LIMITED EXTENT OF THE ADJACENT CONCRETE STRUCTURE, THE BARS SHALL EXTEND AS FAR AS POSSIBLE AND END IN STANDARD HOOKS.

12. HOOKS SHOWN ON DRAWINGS SHALL BE ASSUMED TO BE STANDARD HOOKS PER ACI 318 UNLESS NOTED OTHERWISE.

13. LAP SPLICES IN WALLS SHALL BE STAGGERED UNLESS NOTED OTHERWISE.

14. ALL REINFORCING SHALL BE CONTINUOUS. CONTINUOUS BARS SHALL LAP 48 BAR DIAMETERS OF SMALLER BAR LAPPED, UNLESS NOTED OTHERWISE. ALL REBAR EMBEDMENT LENGTHS SHALL BE 36 BAR DIAMETERS, UNLESS NOTED OTHERWISE.

15. THE CONTRACTOR SHALL BE RESPONSIBLE FOR THE DESIGN OF ALL FORMING, TEMPORARY BRACING AND SHORING.

16. THE OWNER OR THE OWNER'S REPRESENTATIVE SHALL CONDUCT ISOLATION TESTS BETWEEN THE STEEL PIPE AND THE REINFORCING BARS ON THE INLET AND OUTLET PIPES PRIOR TO PLACEMENT OF CONCRETE. THE CONTRACTOR IS REQUIRED TO ENABLE THE INSPECTION AND TESTING TO OCCUR BY PROVIDING ACCESS TO THE ELEMENTS. IN ADDITION, THE CONTRACTOR SHALL PROVIDE 48 HOURS ADVANCE NOTICE TO THE OWNER OR THE OWNER'S REPRESENTATIVE REGARDING ALL CONSTRUCTION ACTIVITIES RELATED TO THE INSPECTION AND TESTING.

17. ALL REINFORCING SHALL BE CONTINUOUS. CONTINUOUS BARS SHALL LAP IN ACCORDANCE WITH THE FOLLOWING TABLE, UNLESS NOTED OTHERWISE. "TOP BARS " ARE HORIZONTAL REINFORCEMENT PLACED SO THAT MORE THAN 12" OF FRESH CONCRETE IS CAST IN THE MEMBER BELOW THE BARS (INCLUDING WALLS). "OTHER BARS" ARE ALL BARS OTHER THAN TOP BARS.

REBAR LAP SPLICE LENGTHS (INCHES)			
BAR SIZE	MIN CONCRETE CLEAR COVER	4,500 PSI	
		TOP BARS	OTHER BARS
#3	1.0"	16	16
#4	1.0"	20	16
#5	1.0"	28	22
	1.5"	24	19
#6	1.0"	38	30
	1.5"	28	22
#7	1.5"	46	36
	2.0"	41	32
#8	1.5"	58	45
	2.0"	46	36

REBAR LAP SPLICE LENGTHS (INCHES)			
BAR SIZE	MIN CONCRETE CLEAR COVER	4,500 PSI	
		TOP BARS	OTHER BARS
#9	1.5"	71	55
	2.0"	58	45
	2.5"	52	40
#10	1.5"	86	67
	2.0"	71	55
	2.5"	62	48
#11	1.5"	110	85
	2.0"	85	66
	2.5"	76	59

18. THE SYMBOL —⌒— INDICATES A LAPPED SPLICE, NOT A BEND IN THE BAR.
19. UNLESS INDICATED OTHER WISE, LAP SPLICES IN BEAMS AND WALLS SHALL BE STAGGERED.
20. ALL SPLICES SHALL BE CLASS "B" SPLICES WITH THE APPROPRIATE ALLOWANCES FOR BAR SPACING AND DEPTH OF CONCRETE CAST BELOW THE REINFORCEMENT UNLESS OTHER WISED NOTED.

21. SPLICES SHALL BE LOCATED WHERE INDICATED ON THE DRAWINGS OR AS AUTHORIZED BY THE ENGINEER.

22. WHEN REINFORCING BARS OF DIFFERENT SIZE ARE TO BE SPLICED, THE LENGTH OF LAP SHALL BE GOVERNED BY THE SMALLER DIAMETER BAR.

23. SPLICES SHALL BE STAGGERED TO GIVE 12 INCHES CLEAR BETWEEN ENDS OF ADJACENT SPLICES, IF BARS ARE SPACED CLOSER THAN 6 INCHES OR 6 BAR DIAMETERS.

24. SPLICES IN REINFORCEMENT AT VERTICAL CONSTRUCTION JOINTS MAY BE SHIFTED TO AGREE WITH THE SEQUENCE OF CONSTRUCTION, UNLESS OTHERWISE SPECIFIED.

25. NON-CONTACT LAP SPLICES SHALL NOT BE SPACED FARTHER APART THAN ONE-FIFTH OF THE REQUIRED LENGTH OF LAP OR 6 INCHES.

26. REINFORCEMENT PARALLELING CONSTRUCTION JOINTS SHALL HAVE A MINIMUM OF 2" CONCRETE COVER.

27. IN CASES WHERE REINFORCING BARS CANNOT BE EXTENDED AS FAR AS REQUIRED DUE TO THE LIMITED EXTENT OF THE ADJACENT CONCRETE STRUCTURE, THE BARS SHALL EXTEND AS FAR AS POSSIBLE AND END IN STANDARD HOOKS.

28. UNLESS NOTED OTHERWISE, HOOKS SHOWN ON DRAWINGS SHALL BE ASSUMED TO BE STANDARD HOOKS PER ACI 318.

29. THE CONTRACTOR SHALL BE RESPONSIBLE FO THTE DESIGN OF ALL FORMING, TEMPORARY BRACING AND SHORING.

30. CONDUITS AND PIPING EMBEDDED IN CONCRETE SHALL BE SPACED A MINIMUM OF FOUR DIAMETERS AND THE OUTSIDE DIAMETER SHALL BE LESS THAN 30% OF THE MEMBER THICKNESS PLACED BETWEEN LAYERS OF REINFORCING.

31. BUNDLED BARS ARE BARS PLACED IN CONTACT WITH EACH OTHER IN GROUPS OF TWO, THREE, OR FOUR. INDIVIDUAL BAR SPLICES WITHIN A BUNDLE SHALL NOT OVERLAP. ENTIRE BUNDLES SHALL NOT BE LAP SPLICED.

32. AN OPEN CIRCLE (O) AT THE END OF A BAR INDICATES A BEND TURNED AWAY FROM OBSERVER A CLOSED CIRCLE () AT THE END OF A BAR INDICATES A BEND TURNED TOWARDS THE OBSERVER.

33. IN NO CASE SHALL BARS BE BENT TURNED TOWARDS THE OBSERVER.

34. IN NO CASE SHALL BARS BE BENT TO GREATER THAN TURNED TOWARDS THE OBSERVER.

35. IN NO CASE SHALL BARS BE BENT TO GREAT THAN 6 TO 1 SLOPE.

36. REINFORCEMENT MAY BE ADJUSTED LATERALLY TO MAINTAIN A CLEAR DISTANCE OF A T LEAST 1" BETWEEN THE REINFORCEMENT AND KEYS, WATER STOPS, ANCHOR BOLTS, FORM TIES, CONDUITS, AND OTHER EMBEDDED MATERIAL. IN HEAVILY REINFORCED AREAS RELOCATION OF THE EMBEDDED MATERIAL MUST BE CONSIDERED.

POST-INSTALLED ANCHORS (EXPANSION OR ADHESIVE)

1. INSTALL IN ACCORDANCE WITH MANUFACTURER'S PRINTED INSTALLATION INSTRUCTIONS (MPII), BUT NOT LESS THAN THAT INDICATED BELOW.

2. ADHESIVE ANCHORS SHALL ONLY BE INSTALLED BY CONSTRUCTION PERSONNEL CERTIFIED UNDER ACI/CRSI ADHESIVE ANCHOR INSTALLER CERTIFICATION PROGRAM OR APPROVED EQUAL. SUBMIT CERTIFICATIONS AS RECORD DATA PRIOR TO ANCHOR INSTALLATION.

3. ANCHOR DIAMETER AND EMBEDMENT SHALL BE AS INDICATED.

4. HOLES SHALL BE DRILLED USING ROTARY HAMMER DRILLS WITH ANSI MATCHED TOLERANCE CARBIDE-TIPPED DRILL BITS. DRILL BIT DIAMETER SHALL MATCH DIAMETER RECOMMENDED BY MANUFACTURER. DRILL HOLES USING HILTI SAFESET TECHNOLOGY, SIMPSON STRONG-TIE SPEED CLEAN DXS DUST EXTRACTION SYSTEM, OR APPROVED EQUAL.

5. USE CARE AND CAUTION WHEN INSTALLING TO AVOID CUTTING OR DAMAGING EXISTING REINFORCING STEEL. FIELD VERIFY EXISTING REINFORCING LOCATIONS PRIOR TO FABRICATION OR CONSTRUCTION, AND THEN COORDINATE REBAR LOCATIONS WITH SHOP DRAWINGS.

6. EXPANSION ANCHORS SHALL BE A STUD BOLT TYPE WITH HEX HEAD NUT AND SHALL BE STAINLESS STEEL 316 UNLESS NOTED OTHERWISE, AND AS NOTED BELOW:
   A. ANCHORS SHALL BE HILTI KWIK BOLT TZ2, SIMPSON STRONG-TIE STRONG-BOLT 2, OR AN APPROVED EQUAL. SUBMIT PUBLISHED COMPARISONS BETWEEN EACH SPECIFIED AND EACH ALTERNATE ANCHOR.
   B. VERIFY HOLE IS CLEAR OF DUST AND DEBRIS.
   C. DRIVE ANCHOR INTO HOLE WITH A HAMMER AND THEN TIGHTEN TO SPECIFIED TORQUE.

7. ADHESIVE ANCHORS SHALL BE DEFORMED REINFORCING BARS, ASTM A615, GR 60, OR STAINLESS STEEL 316 THREADED ROD UNLESS NOTED OTHERWISE, AND AS NOTED BELOW:
   A. ADHESIVE SHALL BE HILTI HIT-RE 500 V3, SIMPSON STRONG-TIE SET 3G, OR AN APPROVED EQUAL. SUBMIT PUBLISHED COMPARISONS BETWEEN EACH SPECIFIED AND EACH ALTERNATE ANCHOR.
   B. PRIOR TO INSTALLATION: ALL DEFORMED BARS AND THREADED ROD SHALL BE CLEAN, FREE OF OIL, GREASE, OR OTHER RESIDUE, IN ACCORDANCE WITH MPII.
   C. VERIFY HOLE IS CLEAR OF DUST AND DEBRIS.
   D. INSTALL ADHESIVE STARTING AT BACK OF HOLE. AS REQUIRED BY MPII, USE MANUFACTURER SUPPLIED PISTON PLUG INJECTION SYSTEM FOR ALL HORIZONTAL AND VERTICALLY INCLINED HOLES.
   E. INSTALL ANCHOR BY SIMULTANEOUSLY TWISTING AND INSERTING INTO HOLE.
   F. ALLOW ANCHOR TO SET REQUIRED TIME. DO NOT DISTURB.
   G. TIGHTEN NUT. DO NOT OVER-TORQUE.
   H. MINIMUM CONCRETE AGE AT TIME OF INSTALLATION: 28 DAYS
   I. CONCRETE TEMPERATURE RANGE AT TIME OF INSTALLATION SHALL BE: 41 DEG F TO 104 DEG F.
   J. CONCRETE MOISTURE CONDITION AT TIME OF INSTALLATION: DRY.

STAINLESS STEEL

1. STAINLESS STEEL MATERIAL SHALL BE IN ACCORDANCE WITH:
   A. PLATES: ASTM A240, S30403 OR S31603, WHERE INDICATED, Fy = 25 KSI, Fu = 70 KSI
   B. BOLTS: ASTM F593, ALLOY GROUP 2, CONDITION CW

IBC CHAPTER 17 SPECIAL INSPECTION REQUIREMENTS

1. THE OWNER OR THE OWNER'S REPRESENTATIVE IS REQUIRED TO PERFORM SPECIAL INSPECTIONS IN ACCORDANCE WITH 2015 IBC AND AS OUTLINED IN THE STATEMENT OF SPECIAL INSPECTIONS.
2. THE CONTRACTOR IS REQUIRED TO ACCOMMODATE THE ABOVE INSPECTIONS AND PROVIDE ACCESS TO THE ELEMENTS REQUIRING INSPECTIONS. IN ADDITION, THE CONTRACTOR SHALL PROVIDE 48 HOURS ADVANCED NOTICE TO THE OWNER'S REPRESENTATIVE REGARDING ALL CONSTRUCTION ACTIVITIES RELATED TO AND/OR AFFECTING THE REQUIRED SPECIAL INSPECTIONS.

ISSUED FOR BID

Freese and Nichols, Inc.
Texas Registered Engineering Firm F-2144

FREESE NICHOLS
10431 Morado Circle, Suite 300
Austin, Texas 78759
Phone - (512) 617-3100
Web - www.freese.com

CITY OF LAGO VISTA
EFFLUENT POND #1 AND #17 REPAIRS AND
POND #2 IMPROVEMENTS
STRUCTURAL
STRUCTURAL NOTES

NO.	ISSUE	BY	DATE

F&N JOB NO. LGV23021
DATE 8/13/2024
DESIGNED BET
DRAWN MG
CHECKED JJG
APPROVED HGO
FILE NAME

VERIFY SCALE Bar is one inch on original drawing. If not one inch on this sheet, adjust scale.
0 1

SHEET S-1
SEQ. 32 OF 37

ACAD Rel: 24.2s (LMS Tech)
Filename: N:\WRD\Drawings\ST-ALL-NOTES.dwg
Last Saved: 7/17/2024 7:45 AM Saved By: 08354

Plot Date: 8/13/2024 1:14 PM Plot By: 02945 Filename: N:\WRD\Drawings\ST-ALL-NOTES.dwg

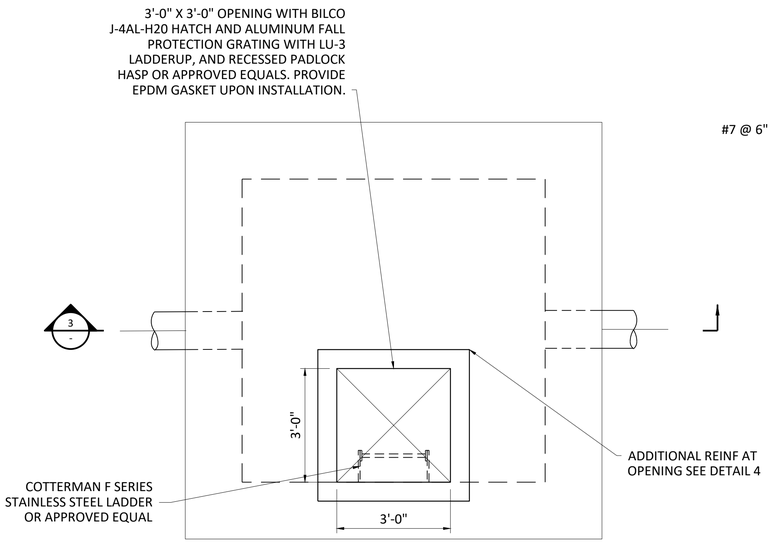

1 - SUMP PIT TOP PLAN

0 1' 2' 4'

1/2"=1'-0"

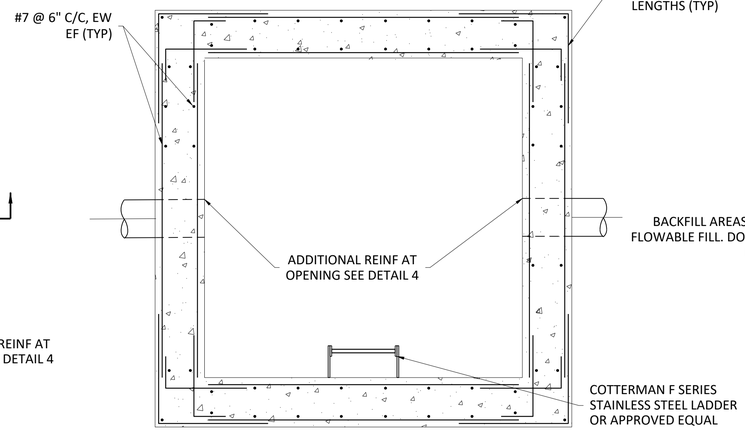

2 - SUMP PIT SECTIONAL PLAN

0 1' 2' 4'

1/2"=1'-0"

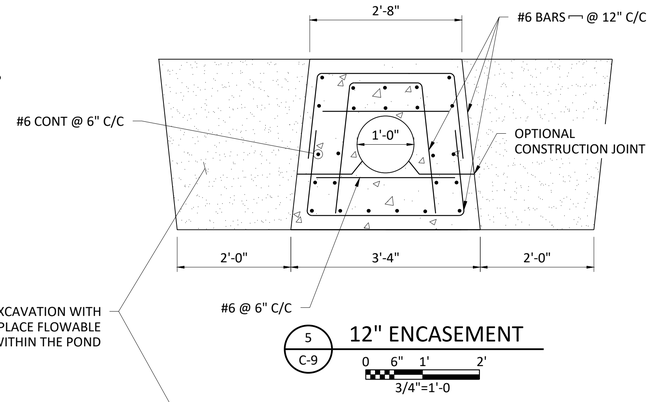

5 C-9 12" ENCASEMENT

0 6" 1' 2'

3/4"=1'-0

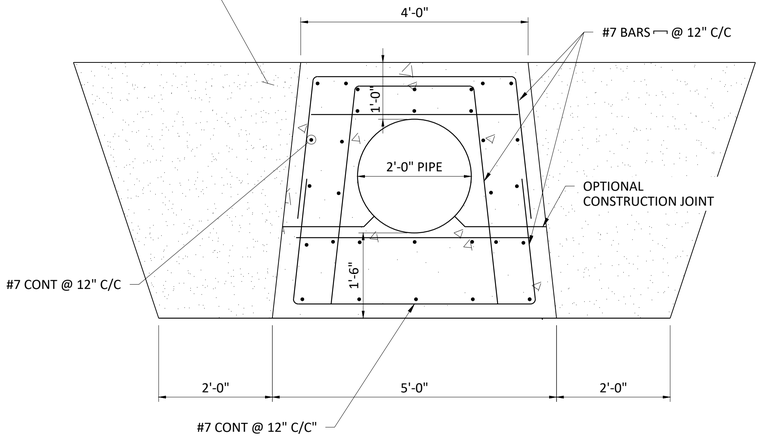

6 C-16 24" ENCASEMENT

0 6" 1' 2'

3/4"=1'-0

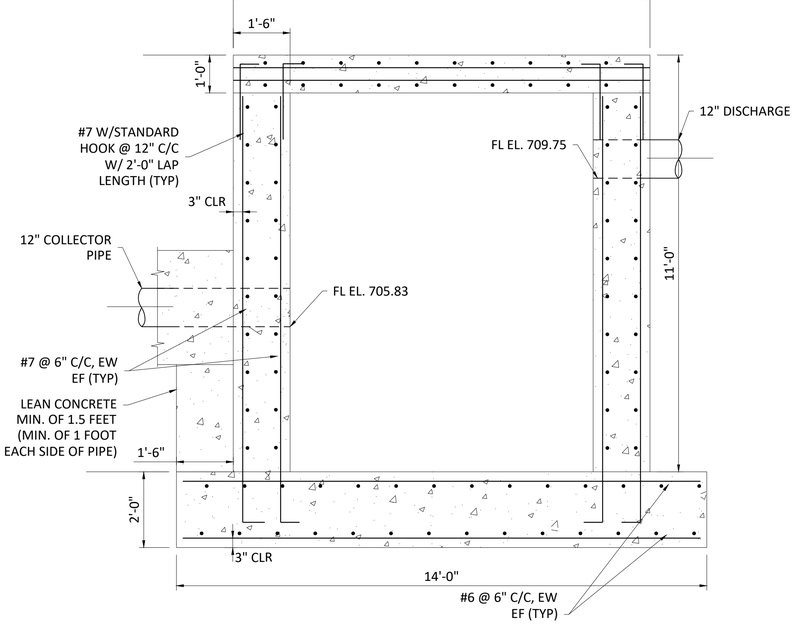

1 - SUMP PIT REINFORCEMENT

0 1' 2' 4'

1/2"=1'-0"

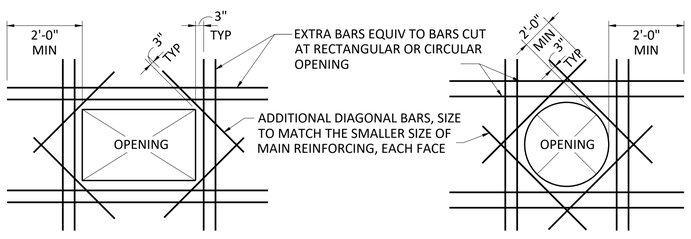

NOTES:
1. DISCONTINUE TYPICAL REINFORCING AT OPENING.
2. PLACE ADDITIONAL BARS IN SAME ORIENTATION AND POSITION AS BARS CUT BY OPENING. PROVIDE ONE SET OF BARS FOR EACH LAYER OF REINFORCING CUT.
3. "REINFORCING STEEL IS TO BE CARRIED ACROSS ALL CONSTRUCTION JOINTS.
4. ADDITIONAL REINFORCING NOT REQUIRED WHEN SPECIFIED REINFORCING IS NOT CUT.
5. ALL REINFORCING SPACING SHALL BE GREATER THAN 3" CENTER TO CENTER.

4 TYPICAL OPENING ADDITIONAL REINFORCEMENT

NOT TO SCALE

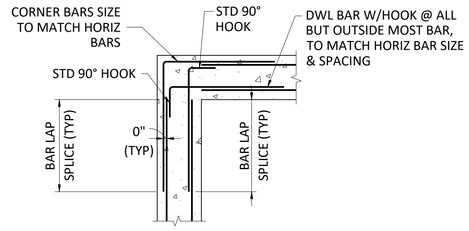

DETAIL NOTES:
1. REINFORCING SHOWN APPLIES TO ALL TOP, BOTTOM AND SIDE BARS. ALL REQUIRED BARS ARE NOT SHOWN IN DETAIL.
2. AT CONTRACTOR'S OPTION, UNLESS NOTED OTHERWISE, ELIMINATE DOWELS AND CORNER BAR AND TERMINATE HORIZONTAL BARS WITH STANDARD HOOKS.

7 - CORNER REINFORCEMENT

NTS

ISSUED FOR BID

Freese and Nichols, Inc.
Texas Registered Engineering Firm F-2144

STATE OF TEXAS 145856 LICENSED PROFESSIONAL ENGINEER
Brian E. Tietz
08/13/2024

FREESE NICHOLS
10431 Morado Circle, Suite 300
Austin, Texas 78759
Phone - (512) 617-3100
Web - www.freese.com

CITY OF LAGO VISTA
EFFLUENT POND #17 REPAIRS AND POND #2 IMPROVEMENTS
STRUCTURAL
MISCELLANEOUS SECTIONS AND DETAILS

F&N JOB NO.	LGV23021
DATE	8/13/2024
DESIGNED	BET
DRAWN	MG
CHECKED	JIG
APPROVED	HGO

NO.	ISSUE	BY	DATE	FILE NAME

Bar is one inch on original drawing. If not one inch on this sheet, adjust scale.

VERIFY SCALE 0 1

SHEET S-2

SEQ. 33 OF 37

ACAD Rel: 24.2s (LMS Tech)
Filename: N:\WRD\Drawings\ST-PD2-DET-PIPEPRO.dwg
Last Saved: 8/5/2024 8:33 AM Saved By: 03675

Plot Date: 8/13/2024 1:14 PM Plot By: 02945 Filename: N:\WRD\Drawings\ST-PD2-DET-PIPEPRO.dwg

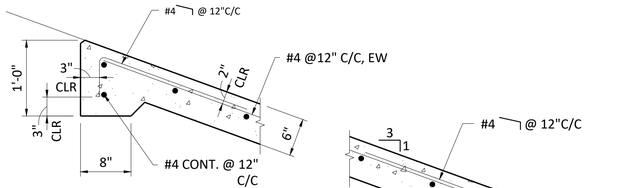

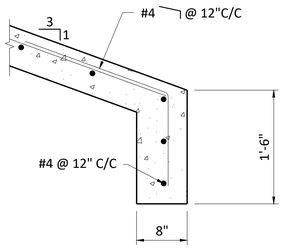

DETAIL NOTES:

1. REFER TO CIVIL DRAWINGS, 1 &2/C-14, FOR HEADWALLS.
2. REFER TO TYPICAL WALL OR SLAB OPENING ADD'L REINFORCEMENT DETAIL FOR ADD'L REINFORCING AROUND PIPE OPENINGS.

1 / - CULVERT SLOPED HEADWALL DETAIL

0 6" 1' 2'

1"=1'-0"

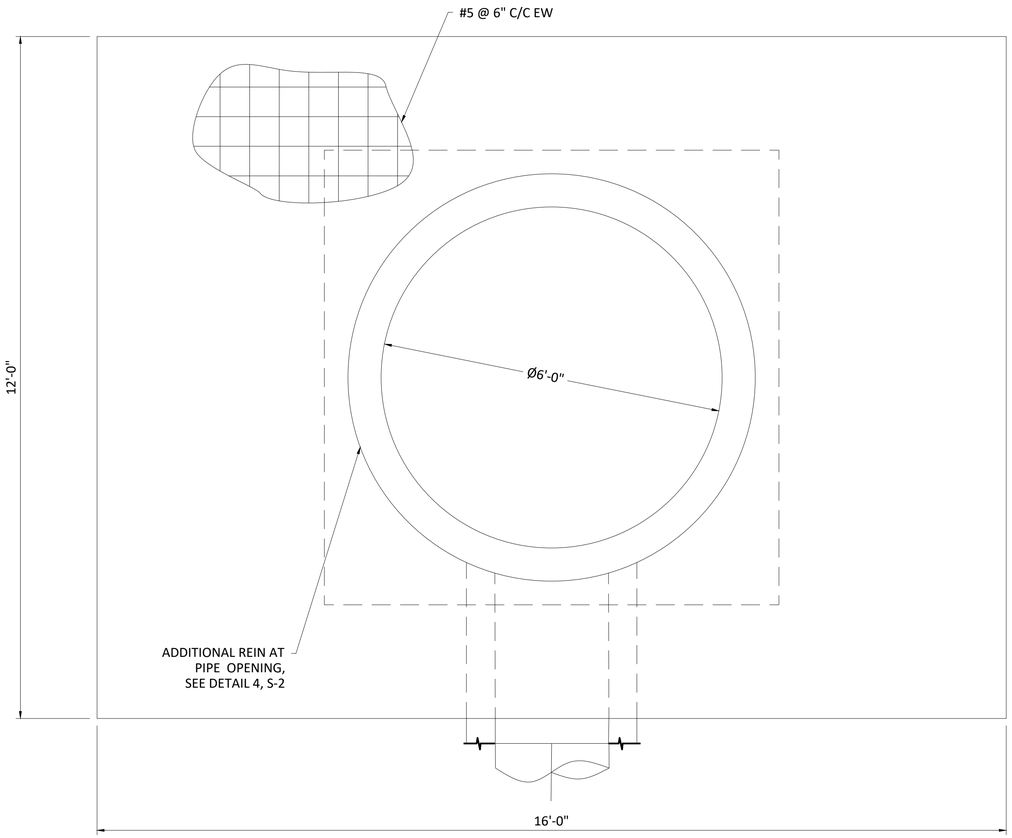

3 / C-16 CONCRETE SLAB FOR IRRICATION PUMP STATION PLAN

0 6" 1' 2'

3/4"=1'-0

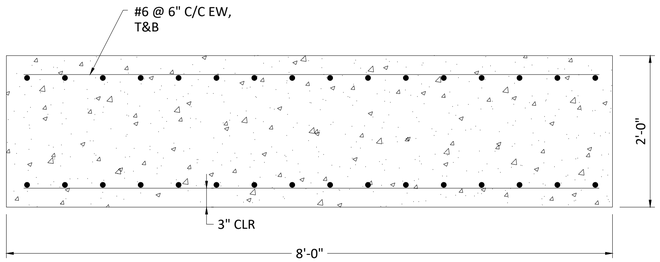

2 / - INTAKE STRUCTURE SLAB FOOTING REINFORCEMENT DETAIL

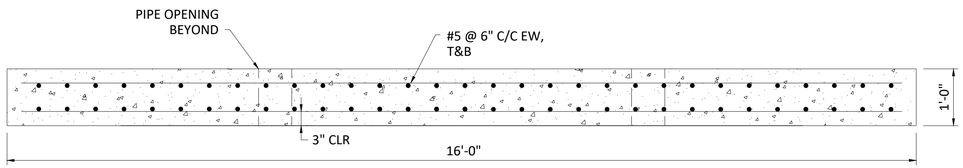

4 / - CONCRETE SLAB FOR IRRIGATION PUMP STATION REINFORCEMENT DETAIL

0 6" 1' 2'

3/4"=1'-0

Freese and Nichols, Inc.
Texas Registered Engineering Firm F-2144

STATE OF TEXAS — 145856 — LICENSED PROFESSIONAL ENGINEER — 08/13/2024

FREESE NICHOLS
10431 Morado Circle, Suite 300
Austin, Texas 78759
Phone - (512) 617-3100
Web - www.freese.com

CITY OF LAGO VISTA
EFFLUENT POND #17 REPAIRS AND POND #2 IMPROVEMENTS
STRUCTURAL

MISC. CONCRETE REINFORCEMENT DETAILS

F&N JOB NO.	LGV23021
DATE	8/13/2024
DESIGNED	BET
DRAWN	MG
CHECKED	JJG
APPROVED	HGO

NO.	ISSUE	BY	DATE

FILE NAME

VERIFY SCALE Bar is one inch on original drawing. If not one inch on this sheet, adjust scale.

0 1

SHEET S-3

SEQ. 34 OF 37

ISSUED FOR BID

ACAD Rel: 24.2s (LMS Tech)
Filename: N:\WRD\Drawings\ST-PD17-DET-ARMOR.dwg
Last Saved: 8/13/2024 11:07 AM Saved By: 02945

Plot Date: 8/13/2024 1:14 PM Plot By: 02945 Filename: N:\WRD\Drawings\ST-PD17-DET-ARMOR.dwg

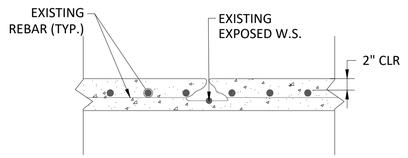

(BEFORE)

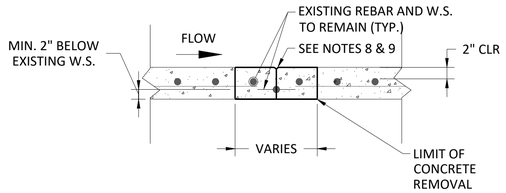

(AFTER)

DELAMINATION/ERODED CONTRACTION JOINT

N.T.S.

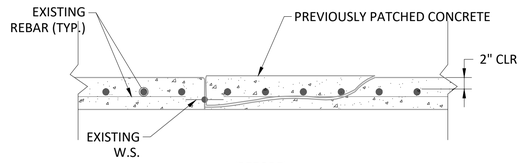

(BEFORE)

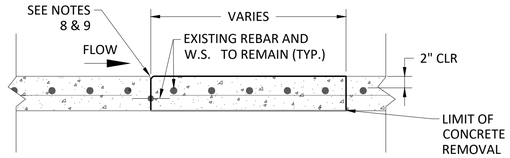

(AFTER)

DELAMINATION/PATCHED CONCRETE

N.T.S.

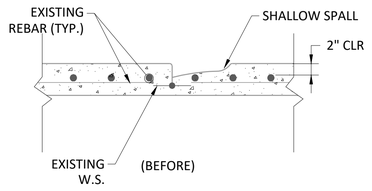

(BEFORE)

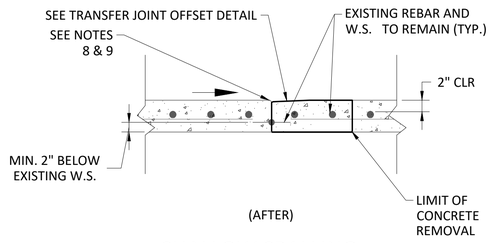

(AFTER)

SHALLOW SPALLING ALONG JOINT

N.T.S.

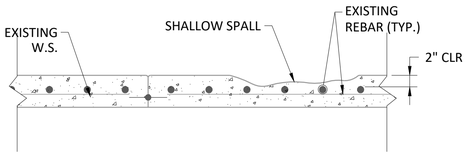

(BEFORE)

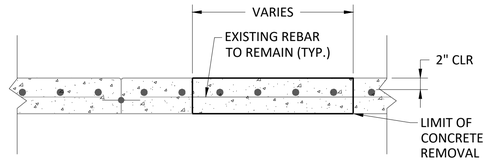

(AFTER)

SHALLOW SPALLING ON SLAB

N.T.S.

NOTES:

1. ALL CONCRETE CUTTING SHALL BE PERFORMED BY A CONCRETE CUTTING SPECIALIST EXPERIENCED IN SIMILAR WORK. CONCRETE CUTTING SPECIALIST SHALL DEMONSTRATE METHOD FOR CUTTING CONCRETE INCLUDING ANGLE AND DEPTH ON ONE AREA TO THE SATISFACTION OF THE OWNER'S REPRESENTATIVE BEFORE PROCEEDING WITH ANY OTHER DEMOLITION OR CUTTING WORK.
2. SAW CUTS SHALL BE ½" DEEP.
3. CORNERS SHALL BE MADE AT 90° , DO NOT OVER CUT THE CORNERS.
4. SAW CUTS SHALL EXTEND BEYOND THE LIMITS OF DAMAGED CONCRETE BY 2" MIN.
5. PROVIDE A ¾"R TOOLED EDGE AT ALL NEWLY FORMED LONGITUDINAL CONTRACTION JOINT EDGES.
6. ALL NEWLY FORMED CONTRACTION JOINTS SHALL BE TREATED WITH A COATING TO BREAK THE CONCRETE BOND. THIS APPLIES TO NEW CONCRETE TO NEW CONCRETE AND NEW CONCRETE TO EXISTING CONCRETE VERTICAL SURFACES. REFER TO SPECIFICATIONS FOR DETAILS.
7. PROTECT EXISTING REBAR AND WATERSTOPS TO REMAIN IN PLACE FROM DAMAGE DURING CONCRETE REMOVAL PROCESS.
8. CLEAN ALL EXPOSED EXISTING CONCRETE SURFACES (HORIZONTAL AND VERTICAL) PRIOR TO PLACING NEW CONCRETE.
9. PLACE BONDING AGENT ON THE CLEANED EXISTING CONCRETE SURFACE. COAT EXPOSED REINFORCEMENT WITH AN ANTI-CORROSION COATING. USE SIKA ARMATEX 110 EPOCEM OR APPROVED EQUAL FOR BONDING AGENT AND REINFORCEMENT PROTECTION.
10. WHERE WATERSTOPS ARE TORN, USE ADEKA ULTRA SEAL P-201. REFER MANUFACTURER INSTRUCTION FOR PREPARATION AND APPLICATION OF THE PRODUCT.
11. CONTRACTOR SHALL MARK THE AREAS PROPOSED FOR CONCRETE REPAIR. ENGINEER AND THE OWNER SHALL INSPECT THE PROPOSED AREAS AND SHALL ACCEPT OR MODIFY THE QUANTITY BEFORE THE CONTRACTOR PROCEEDS WITH THE REPAIRS.

ISSUED FOR BID

Freese and Nichols, Inc.
Texas Registered Engineering Firm F-2144

STATE OF TEXAS · 145856 · LICENSED PROFESSIONAL ENGINEER · 11/05/2024

FREESE NICHOLS
10431 Morado Circle, Suite 300
Austin, Texas 78759
Phone - (512) 617-3100
Web - www.freese.com

CITY OF LAGO VISTA
EFFLUENT POND #17 REPAIRS AND
POND #2 IMPROVEMENTS
STRUCTURAL

POND #17 CONCRETE REPAIR DETAILS

NO.	ISSUE	BY	DATE	FILE NAME

F&N JOB NO.	LGV23021
DATE	8/13/2024
DESIGNED	BET
DRAWN	MG
CHECKED	JJG
APPROVED	HGO

VERIFY SCALE Bar is one inch on original drawing. If not one inch on this sheet, adjust scale.
0 1

SHEET S-4
SEQ. 35 OF 37

ACAD Rel: 24.2s (LMS Tech)
Filename: N:\WRD\Drawings\ST-PD17-DET-CONREP.dwg
Last Saved: 11/4/2024 5:00 PM Saved By: 08354

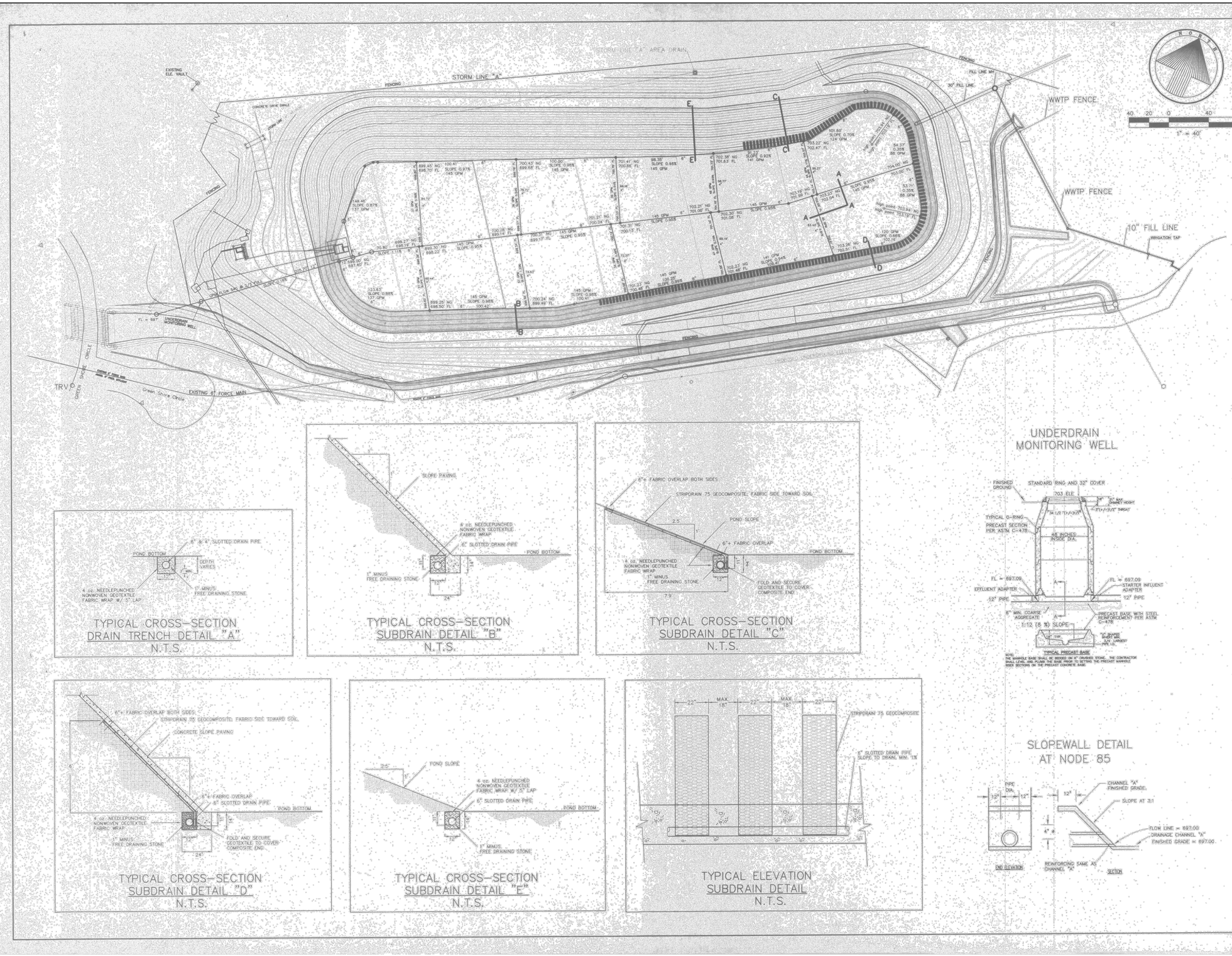

TYPICAL CROSS-SECTION
DRAIN TRENCH DETAIL "A"
N.T.S.

TYPICAL CROSS-SECTION
SUBDRAIN DETAIL "B"
N.T.S.

TYPICAL CROSS-SECTION
SUBDRAIN DETAIL "C"
N.T.S.

TYPICAL CROSS-SECTION
SUBDRAIN DETAIL "D"
N.T.S.

TYPICAL CROSS-SECTION
SUBDRAIN DETAIL "E"
N.T.S.

TYPICAL ELEVATION
SUBDRAIN DETAIL
N.T.S.

SLOPEWALL DETAIL
AT NODE 85

EFFLUENT HOLDING POND
AT THE WASTEWATER
TREATMENT PLANT

EFFLUENT POND
UNDERDRAIN PLAN

OWNER: THE CITY OF LAGO VISTA, TEXAS

TIMOTHY E. HAYNIE
87983
LICENSED
PROFESSIONAL
ENGINEER
STATE OF TEXAS

DATE: MAY 30, 2001

SHEET NUMBER
14R OF 31

REVISED

NO.	BY:	DATE:	REVISION:

PLOT DATE: 05-03-01

PROJECT NO.	98-151
FILE NAME:	R14
DATE:	05-03-01
SCALE:	1" = 40'

DESIGNED BY: T.E.H. JF
DRAWN BY: T.E.H. JF
CHECKED BY: T.E.H.
REVISED BY: T.E.H. JF

HAYNIE CONSULTING, INC.
Civil Engineers and Land Surveyors
1010 Provident Lane
Round Rock, Texas 78664-3276
Ph: 512-837-2446 Fax: 512-837-9463

Freese and Nichols, Inc.
Texas Registered Engineering Firm F-2144

FREESE NICHOLS
10431 Morado Circle, Suite 300
Austin, Texas 78759
Phone - (512) 617-3100
Web - www.freese.com

CITY OF LAGO VISTA
EFFLUENT POND #17 REPAIRS AND
POND #2 IMPROVEMENTS
REFERENCE
EFFLUENT POND #17 EXISTING UNDERDRAIN PLAN

NO.	ISSUE	BY	DATE	FILE NAME

F&N JOB NO.	LGV23021
DATE	8/13/2024
DESIGNED	BET
DRAWN	MG
CHECKED	JJG
APPROVED	HGO

VERIFY SCALE
Bar is one inch on original drawing, if not one inch on this sheet, adjust scale.
0 1"

SHEET
R-1
SEQ.
36 OF 37

ISSUED FOR BID

ACAD Rel: 24.2s (LMS Tech)
Filename: N:\WRD\Drawings\RF-UNDRPL.dwg
Last Saved: 7/30/2024 9:33 AM Saved By: 08354

Plot Date: 8/13/2024 1:14 PM Plot By: 02945 Filename: N:\WRD\Drawings\RF-UNDRPL.dwg

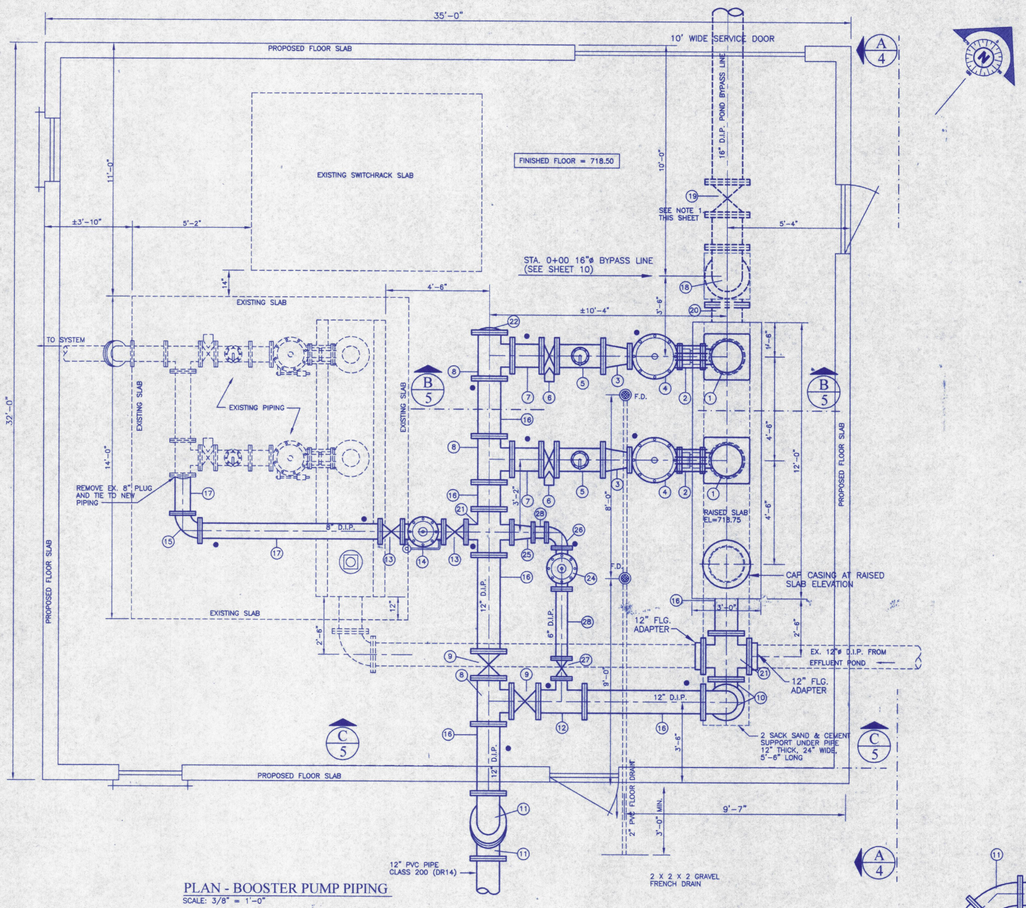

PLAN - BOOSTER PUMP PIPING
SCALE: 3/8" = 1'-0"

PIPING SCHEDULE		
ITEM NO.	DESCRIPTION	QUANTITY
1	VERTICAL TURBINE PUMP, 5-STAGE, 700 GPM, 7.67" DIA., 1770 RPM, 270' TDH, 75 HP MOTOR, FAIRBANKS MORSE, MODEL 11M, 8" DISCHARGE	2 EACH
2	8"ø X 12" DRESSER COUPLING W/4 ALL THREADS	2 EACH
3	12" X 8" D.I.P. ECCENTRIC REDUCER	3 EACH
4	8" CONTROL VALVES, CLA-VAL MODEL 60-31	2 EACH
5	12" X 4" D.I.P. TAPPED TEE W/1" AIR RELIEF	2 EACH
6	12" BUTTERFLY VALVE	2 EACH
7	12"ø D.I.P. SPOOL PIECE	2 EACH
8	12" X 12" D.I.P. TEE	2 EACH
9	12" GATE VALVE	2 EACH
10	12" 90° D.I.P. BEND	2 EACH
11	12" 45° PVC CLASS 200 BEND	2 EACH
12	12" X 6" D.I.P. TEE	1 EACH
13	6" GATE VALVE	4 EACH
14	8" PRESSURE REDUCING/CHECK VALVE CLA-VAL MODEL 690-01D	1 EACH
15	8" 90° D.I.P. BEND	1 EACH
16	12" D.I.P. PIPE (VARIABLE LENGTHS)	
17	8" D.I.P. PIPE (VARIABLE LENGTHS)	
18	16" 90° D.I.P. BEND	2 EACH
19	16" GATE VALVE	1 EACH
20	16" D.I.P. PIPE (VARIABLE LENGTHS)	
21	12" x 12" D.I.P. CROSS	1 EACH
22	12" D.I.P. PLUG	1 EACH
23	8" x 8" D.I.P. TEE	1 EACH
24	6" PRESSURE RELIEF VALVE CLA-VAL MODEL 50-01	1 EACH
25	8" x 6" D.I.P. REDUCER	1 EACH
26	6" 90° D.I.P. BEND	1 EACH
27	6" GATE VALVE	1 EACH
28	6" D.I.P. PIPE (VARIABLE LENGTHS)	
●	2"ø WELDED STEEL PIPE SUPPORT	13 EACH

NOTES:
1. EXTEND VALVE BOX FROM TOP OF VALVE TO FINISHED FLOOR ELEVATION. PROVIDE VALVE OPERATOR EXTENSION ARMS AS NECESSARY.
2. EXISTING PUMPS ARE BYRON-JACKSON 400 GPM, 3 STAGE, 20 HP MOTOR; 120' TDH, MODEL 10 "G" H.
3. EXISTING PUMPS TO REMAIN IN SERVICE DURING CONSTRUCTION.

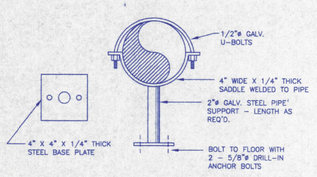

TYPICAL PIPE SUPPORT DETAIL
NOT TO SCALE

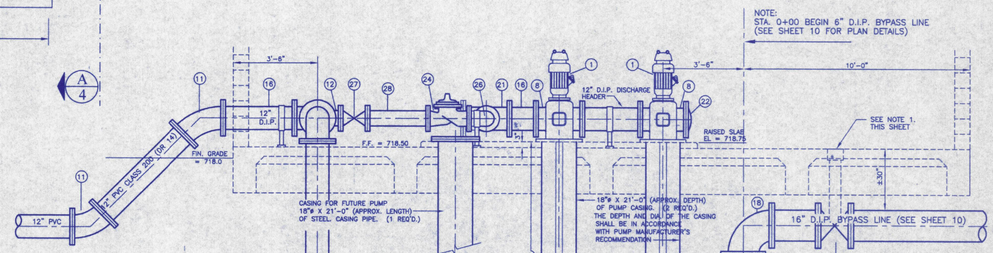

A-A ELEVATION VIEW
SCALE: 3/8" = 1'-0"

NO.	BY:	DATE:	REVISION

PLOT DATE: 10-28-03

PROJECT: CEDAR BREAKS EFFLUENT DISPOSAL SYSTEM EFFLUENT PUMP STATION

SHEET TITLE: PUMP STATION PIPING SHEET 1 OF 2

DWNER: THE CITY OF LAGO VISTA, TEXAS 78645

STATE OF TEXAS — TIMOTHY E. HAYNIE — 36982 — LICENSED PROFESSIONAL ENGINEER

DATE: 11-3-03

SHEET NUMBER: 4 OF 21

PROJECT NO.	101-187
FILE NAME:	CB-4.DWG
DATE:	
SCALE:	3/8"=1'-0"
DESIGNED BY:	JLM
DRAWN BY:	JLM
CHECKED BY:	TEH
REVISED BY:	

HAYNIE CONSULTING, INC.
Civil Engineers and Land Surveyors
1010 Provident Lane
Round Rock, Texas 78664-3276
Ph: 512-807-2446 Fax: 512-837-9463

Freese and Nichols, Inc.
Texas Registered Engineering Firm F-2144

FREESE NICHOLS
10431 Morado Circle, Suite 300
Austin, Texas 78759
Phone - (512) 617-3100
Web - www.freese.com

CITY OF LAGO VISTA
EFFLUENT POND #17 REPAIRS AND POND #2 IMPROVEMENTS
REFERENCE
EFFLUENT POND #17
EXISITING PUMP STATION INFORMATION

NO.	ISSUE	BY	DATE	F&N JOB NO. LGV23021
				DATE 8/13/2024
				DESIGNED BET
				DRAWN MG
				CHECKED JJG
				APPROVED HGO

FILE NAME

VERIFY SCALE Bar is one inch on original drawing. If not one inch on this sheet, adjust scale.
0 1"

SHEET R-2
SEQ. 37 OF 37

ISSUED FOR BID

ACAD Rel: 24.2s (LMS Tech)
Filename: N:\WRD\Drawings\RF-PUMP-STAT.dwg
Last Saved: 7/29/2024 3:29 PM Saved By: 08354

Plot Date: 8/13/2024 1:14 PM Plot By: 02945 Filename: N:\WRD\Drawings\RF-PUMP-STAT.dwg

65% DESIGN DRAWINGS
FOR
EFFLUENT POND #14 IMPROVEMENTS AND HDPE PRESSURED PIPELINE INSTALLATION BETWEEN POND #2 AND POND #17
MARCH 2025

CITY OF
LAGO VISTA
TEXAS

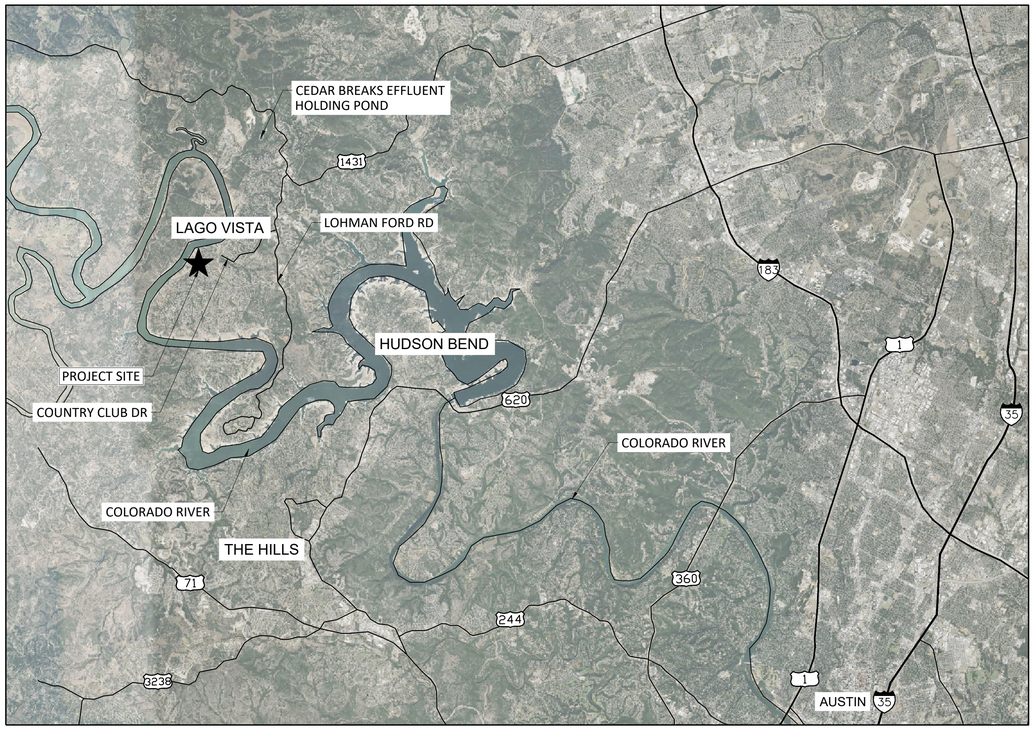

NORTH

LOCATION MAP
1"=10,000'

SHEET INDEX	
Sheet Number	Sheet Title
GENERAL	
G-1	COVER SHEET
G-2	GENERAL NOTES
G-3	GENERAL NOTES-WATERLINE
G-4	LEGEND, ABBREVIATIONS, & MATERIAL NOTES
G-5	OVERALL PROJECT LAYOUT
G-6	OVERALL WATER LINE LAYOUT
CIVIL	
C-1	POND #14 EXISTING CONDITIONS
C-2	POND #14 DEMOLITION PLAN
C-3	POND #14 DIMENSION CONTROL
C-4	POND #14 PROPOSED GRADING PLAN
C-5	POND #14 TYPICAL SECTIONS
C-6	POND #14 UNDERDRAIN PLAN & PROFILE
C-7	GEOSYNTHETIC POND LINER DETAILS
C-8	POND #14 MISC. DETAILS
C-9	POND #14 SWPPP
C-10	POND #17 EXISTING CONDITIONS
C-11	POND #17 UNDERDRAIN OUTLET PLAN
C-12	POND #17 UNDERDRAIN OUTLET PROFILE & DETAILS
C-13	POND #2 EXISTING CONDITIONS
C-14	POND #2 RECIRCULATION SYSTEM PLAN
C-15	STA 00+60 TO STA 18+00
C-16	STA 18+00 TO STA 36+00
C-17	STA 36+00 TO STA 50+64
C-18	CROSSING PLAN AND PROFILE STA 12+00 TO ST 15+00
C-19	CROSSING PLAN AND PROFILE STA 27+00 TO ST 30+00
C-20	CROSSING PLAN AND PROFILE STA 35+00 TO ST 39+50
STRUCTURAL	
S-1	STRUCTURAL NOTES
S-2	POND #14 SUMP PIT
S-3	POND #14 SHOTCRETE LINER REINFORCEMENT
STANDARD DETAILS	
DT-1	STANDARD DETAILS I
DT-2	STANDARD DETAILS II

OWNER:
CITY OF LAGO VISTA
5803 THUNDERBIRD ST.
LAGO VISTA, TEXAS 78645
TELEPHONE: (512) 599-4179

CAUTION!!!
EXISTING UNDERGROUND UTILITIES IN THE AREA. CALL TEXAS 811 48 HOURS PRIOR TO CONSTRUCTION

FREESE AND NICHOLS
10431 Morado Circle, Suite 300
Austin, Texas 78759
Phone – (512) 617-3100
Web – www.freese.com

NOT FOR CONSTRUCTION
THIS DOCUMENT IS RELEASED FOR THE PURPOSE OF INTERIM REVIEW UNDER THE AUTHORITY OF: BRYCE EARL TODD P.E.
TEXAS NO: 145856 ON DATE:03/21/2025
IT IS NOT TO BE USED FOR CONSTRUCTION, BIDDING OR PERMIT PURPOSES.

GENERAL NOTES

1. THE FOLLOWING GENERAL NOTES APPLY TO ALL SHEETS OF THESE CONTRACT DOCUMENTS AS IF THEY WERE WRITTEN IN THEIR ENTIRETY ON EACH SHEET.
2. CONTRACTOR TO ADD THE ENGINEER OF RECORD (EOR) AND ANY SUBCONTRACTORS AS ADDITIONAL INSURED PARTIES.
3. COORDINATE ALL WORK WITH THE CITY OF LAGO VISTA'S CONSTRUCTION MANAGER.
4. CONTRACTOR SHALL BE RESPONSIBLE FOR OBTAINING ALL NECESSARY PERMITS, BONDS, AND INSURANCE PRIOR TO START OF CONSTRUCTION.
5. ALL CONSTRUCTION IS TO BE IN ACCORDANCE WITH THE CONTRACT DOCUMENTS. THE PROJECT IS SUBJECT TO INSPECTION BY CITY OF LAGO VISTA CONSTRUCTION MANAGER, PROJECT INSPECTOR, CITY OF LAGO VISTA STAFF, AND THE ENGINEER OF RECORD, AT ANY TIME.
6. STAGING AREA FOR CONTRACTOR'S USE AND ACCESS/ENTRY POINTS TO PROJECT SITE WILL BE CONTRACTOR'S RESPONSIBILITY TO SECURE. LOCATIONS SECURED SHALL BE COORDINATED WITH CITY OF LAGO VISTA CONSTRUCTION MANAGER PRIOR TO THE START OF CONSTRUCTION. SURROUNDING AREA AND ROADS ARE PRIVATE PROPERTY.
7. IN ACCORDANCE WITH THE TEXAS LAW, CONTRACTOR SHALL VERIFY LOCATIONS OF UNDERGROUND UTILITY LINES PRIOR TO COMMENCING CONSTRUCTION. CONTRACTOR SHALL NOTIFY TEXAS ONE CALL AT 800-245-4545, OR ANOTHER TEXAS REGISTERED NOTIFICATION CENTER, AT LEAST 48 HOURS BEFORE PROCEEDING WITH ANY EXCAVATION. CONTRACTOR SHALL IMMEDIATELY NOTIFY CITY OF LAGO VISTA CONSTRUCTION MANAGER OF ANY POTENTIAL CONFLICTS PRIOR TO COMMENCING EXCAVATION.
8. CONTRACTOR SHALL BE RESPONSIBLE FOR PROTECTING THE EXISTING STRUCTURES, GATES, UTILITIES, TREES, SHRUBS, FENCES, AND OTHER ADJOINING PROPERTIES THAT ARE OUTSIDE THE WORK LIMITS. ANY OF THESE ITEMS DAMAGED BY THE CONTRACTOR SHALL BE REPAIRED OR REPLACED- IN- KIND BY THE CONTRACTOR TO THE ORIGINAL OR BETTER CONDITION AT NO COST TO CITY OF LAGO VISTA.
9. CONTRACTOR SHALL COMPLY WITH ALL APPLICABLE OSHA RULES AND REGULATIONS THROUGHOUT THE PROJECT, INCLUDING BUT NOT LIMITED TO: PROVIDING ADEQUATE TEMPORARY SLOPE PROTECTION OR EARTH RETENTION SYSTEM (E.G., SHEET PILING, TRENCH BOX, EARTHEN DIKES, ETC.) NECESSARY TO PREVENT THE EXISTING LEVEE EMBANKMENTS FROM SLOUGHING DURING CONSTRUCTION OR DURING TRENCH EXCAVATION. THESE TEMPORARY MEASURES ARE TO BE SAFELY REMOVED WHEN CONSTRUCTION IS COMPLETED OR THE MEASURE HAS MET ITS INTENDED PURPOSE.
10. CONTRACTOR SHALL BE RESPONSIBLE FOR DAILY CLEAN-UP OF THE PROJECT SITE AND ALL ACCESS ROADS INCLUDING BUT NOT LIMITED TO: ALL PRIVATE, LOCAL, COUNTY, AND STATE ROADS USED AS CONSTRUCTION ROUTES. ALL DAMAGED ROADS, PARKING LOTS, STAGING AREAS, ETC. ARE TO BE RESTORED TO ORIGINAL OR BETTER CONDITION TO THE SATISFACTION OF CITY OF LAGO VISTA AND ALL PRIVATE, LOCAL, COUNTY, STATE, AND FEDERAL AGENCIES WHERE APPLICABLE.
11. CONTRACTOR SHALL BE RESPONSIBLE FOR PROVIDING MEASURES TO PROTECT THEIR PROPERTY, PERSONNEL, EQUIPMENT, WORK-IN-PROGRESS AND COMPLETED WORK THROUGHOUT THE PROJECT. ANY DAMAGE TO WORK-IN-PROGRESS AND/OR ANY COMPLETED WORK PRIOR TO PROJECT COMPLETION SHALL BE REPLACED ACCORDING TO THESE CONTRACT DOCUMENTS, AT NO COST TO CITY OF LAGO VISTA.
12. CLEARING PROJECT SITE USING FIRE OR CHEMICALS IS NOT ALLOWED.
13. NO FIREARMS OR ILLEGAL WEAPONS SHALL BE PERMITTED ON THE PROJECT SITE.
14. THE GOLF COURSE WILL REMAIN OPEN DURING THE COURSE OF CONSTRUCTION.
    - 14.a. HOLE NUMBER 14 WILL BE CLOSED UNTIL CONSTRUCTION OF POND #14 HAS REACHED FINAL COMPLETION. THE GOLF CART PATHWAY WILL REMAIN OPEN FOR THE DURATION OF CONSTRUCTION. THE GOLF CART PATHWAY SHALL BE PROTECTED FROM CONSTRUCTION ACTIVITIES FOR THE DURATION OF THE PROJECT. IF ANY DAMAGE OCCURS THE CONTRACTOR SHALL REPLACE THE DAMAGED SIDEWALK AT NO ADDITIONAL COST TO THE OWNER.
    - 14.b. CONSTRUCTION OF THE PRESSURIZED EFFLUENT PIPELINE WILL IMPACT HOLE NUMBERS 17, 18, 1, 2, AND THE DRIVING RANGE. EACH OF THESE WILL BE CLOSED ONE AT A TIME FOLLOWING THE PROGRESS OF CONSTRUCTION. THE CONTRACTOR SHALL MAINTAIN CONSTANT COMMUNICATION WITH THE CITY OF LAGO VISTA REGARDING SCHEDULE. THE CONTRACTOR SHALL PROVIDE THE CITY OF LAGO VISTA WITH A WRITTEN REQUEST TO CLOSE THE SUCCEEDING HOLE AT LEAST TWO WEEKS BEFORE PERFORMING WORK IN THE VICINITY OF SAID HOLE. THE CONTRACTOR SHALL ESTABLISH GRASS ACCEPTABLE TO THE OWNER AT THE CURRENT CONSTRUCTION ZONE PRIOR TO BEGINNING WORK AT A NEW GOLF HOLE..
15. THE PROPOSED STAGING AREAS ARE GRASSED. CONTRACTOR SHALL RESTORE THE GRASS ACCORDING TO THE SPECIFICATIONS AND SHEET C-9.
16. IF NECESSARY, CONTRACTOR IS RESPONSIBLE FOR SOURCING THEIR OWN BORROW MATERIAL AT NO ADDITIONAL COST TO THE OWNER.
17. CONTRACTOR SHALL HIRE AN INDEPENDENT 3RD PARTY CONSTRUCTION MATERIALS TESTING LAB. TESTING REQUIREMENTS AND STANDARDS ARE LISTED IN THE SPECIFICATIONS. ALL TESTING REPORTS SHALL BE MADE AVAILABLE TO THE EOR AND THE CITY OF LAGO VISTA.

STORMWATER POLLUTION PREVENTION PLAN

1. THE EROSION CONTROL PLAN PROVIDED IN THE PLAN SET (SHEET C-9) SHALL BE CONSIDERED THE MINIMUM EROSION CONTROL MEASURES FOR THE PROJECT. THE CONTRACTOR SHALL BE RESPONSIBLE FOR DEVELOPING A SWPPP IN ACCORDANCE WITH THE STATE AND LOCAL REGULATIONS.
2. THE CONTRACTOR SHALL CONTROL EROSION AND SEDIMENTATION PER APPLICABLE JURISDICTIONAL PERMITS, LAWS, REGULATIONS, AND STORM WATER PROTECTION AND POLLUTION PREVENTION (SWPPP) DETAILS.
3. CONTRACTOR SHALL MAINTAIN FLOW IN DRAINAGE DITCHES AND SWALES AT ALL TIMES AND PROVIDE TEMPORARY STRUCTURAL OR NON-STRUCTURAL SWPPP MEASURES THROUGHOUT THE PROJECT SITE AND PROJECT DURATION WHERE REQUIRED. METHODS USED BY CONTRACTOR TO MAINTAIN FLOW IN DITCHES AND PROVIDED SWPPP MEASURES MUST BE APPROVED BY THE CONSTRUCTION MANAGER, CITY OF LAGO VISTA, AND THE ENGINEER PRIOR TO INSTALLATION.
4. THE CONTRACTOR SHALL MINIMIZE TURBIDITY IN WATERWAYS DURING ALL PHASES OF THE PROJECT. THE CONTRACTOR SHALL EMPLOY METHODS TO ENSURE MINIMUM TURBIDITY FROM NEAR AND LONG-TERM EROSION FROM FILLS, AND SPOIL, AND DEVASTATED AREAS DURING AND FOLLOWING CONSTRUCTION.
5. THE CONTRACTOR SHALL NOT BE ALLOWED TO EXCAVATE POND/EMBANKMENT MATERIAL TO INSTALL EROSION AND SEDIMENT CONTROL MEASURES WITHOUT APPROVAL BY THE CONSTRUCTION MANAGER FOR THE CITY OF LAGO VISTA.

EMBANKMENT SLOPE PROTECTION NOTES

1. THE FOLLOWING NOTE APPLIES TO ALL WORK PERTAINING TO THE EXISTING EMBANKMENT.
   - 1a. EXISTING EMBANKMENT/LEVEES SHALL BE STRIPPED OF LOOSE SOILS AND VEGETATION. THE NEW/IMPROVED EMBANKMENT/LEVEE OR EMBANKMENT/LEVEE BACKFILL SHALL BE BENCHED INTO EXISTING EMBANKMENT/LEVEE. THE BENCHES SHALL BE FORMED BY CUTTING INTO THE EXISTING EMBANKMENT/LEVEE BY MAXIMUM OF 8 INCHES HIGH AND A MINIMUM OF 3' WIDE.
2. DEWATERING AND REMOVAL OF SEDIMENT AND OTHER WET MATERIALS WITHIN THE CONSTRUCTION LIMITS OF THE POND WILL BE REQUIRED.

CLEARING AND GRUBBING NOTES

1. CLEAR AND GRUB ALL AREAS WITHIN THE PROPOSED POND #14 LAYOUT AND WITHIN 10 FEET OF THE PROPOSED EMBANKMENT. THE USE OF THE CHEMICALS FOR CLEARING AND GRUBBING IS NOT ALLOWED. SEE SPECIFICATION 31 11 00.13.
2. ALL TREES AND VEGETATION LOCATED WITHIN AREAS RECEIVING EMBANKMENT FILL AND/OR RIPRAP SHALL BE REMOVED. ALL TREES DESIGNATED FOR REMOVAL SHALL BE CUT 2-3 FEET BELOW GRADE. THE ROOT BALL & BASE ROOTS SHALL BE MULCHED AND TREATED TO KILL THE ROOT SYSTEM. SEE TCEQ'S ACCEPTED LIST OF APPROVED PRODUCTS. HTTPS://WWW.TCEQ.TEXAS.GOV/ASSETS/PUBLIC/COMM_EXEC/PUBS/GI/GI357/GI-357.PDF. THE CONTRACTOR SHALL PLACE APPROVED EARTHFILL WITHIN VOID AND TO GRADE AND COMPACT PER REQUIREMENTS WITHIN THE PROJECT SPECIFICATIONS.

CONTROL OF WATER

1. CONTROL OF WATER FOR THE PURPOSES OF THESE CONTRACT DOCUMENTS MEANS:
   - 1.a. GROUNDWATER (PRESSURIZED OR STATIC)
   - 1.b. SURFACE WATER (PONDS, RESERVOIRS, CANALS, EXISTING CONDUITS, TEMPORARY CONDUITS)
   - 1.c. WAVES, SPLASHES, OR RUNUP FROM THE POND
   - 1.d. WATER RESULTING FROM METEOROLOGICAL EVENTS
2. GROUNDWATER LEVELS BELOW GROUND SURFACE ELEVATION (PRESSURIZED AND STATIC) AS WELL AS SURFACE WATER LEVELS CAN VARY. CONTRACTOR SHALL INCORPORATE ADEQUATE MEANS AND METHODOLOGIES TO ENSURE THAT WATER DOES NOT NEGATIVELY AFFECT THE FOUNDATION SOILS BENEATH THE FOUNDATION OF ANY STRUCTURE SHOWN ON THESE CONSTRUCTION DRAWINGS. 3" THICK MUD SLABS ARE REQUIRED AT FINAL EXCAVATED SUBGRADE BELOW CONCRETE STRUCTURES. CONTRACTOR SHALL EXCAVATE AS NECESSARY TO ENSURE THE PROPER ELEVATIONS OF THE STRUCTURES ARE MET. MUD SLABS WILL BE REQUIRED TO BE PLACED WITHIN 24 HOURS OF EXCAVATION FOR A GIVEN FOUNDATION.
3. CONTRACTOR SHALL REMOVE ANY TEMPORARY MEASURES EMPLOYED FOR CONSTRUCTION PURPOSES AFTER CONSTRUCTION (OR WHEN THE TEMPORARY MEASURE HAS FULFILLED ITS INTENDED PURPOSE).

SITE SECURITY

1. THE CONSTRUCTION SITE AT POND #14 SHALL BE PROTECTED WITH A TEMPORARY SECURITY FENCE, BUILT IN ACCORDANCE WITH CITY OF LAGO VISTA SPECIFICATIONS.

CONSTRUCTION SEQUENCING

1.

LANDSCAPING PLAN

1. CONTRACTOR SHALL SUBMIT A LANDSCAPING PLAN TO THE CITY OF LAGO VISTA'S DIRECTOR OF PUBLIC WORKS AND DIRECTOR OF PARKS & RECREATION FOR REVIEW AND APPROVAL PRIOR TO THE START OF CONSTRUCTION. THIS PLAN SHALL, AT A MINIMUM, SHOW THE LOCATION OF ALL PROTECTED TREES, LOCATION OF ALL TREES TO BE REMOVED, AND PROPOSED LOCATIONS FOR REPLANTING AS REQUIRED BY THE TREE PRESERVATION ORDINANCE. THE DIRECTOR OF PUBLIC WORKS WILL OBTAIN THE NECESSARY TREE REMOVAL PERMIT BASED ON THIS PLAN.

Freese and Nichols, Inc.
Texas Registered Engineering Firm F-2144

NOT FOR CONSTRUCTION
THIS DOCUMENT IS RELEASED FOR THE PURPOSE OF INTERIM REVIEW UNDER THE AUTHORITY OF BRYCE E. MILLER, P.E. TEXAS NO. 145856 ON DATE 03/21/2025 IT IS NOT TO BE USED FOR CONSTRUCTION, BIDDING OR PERMIT PURPOSES.

FREESE NICHOLS
10431 Morado Circle, Suite 300
Austin, Texas 78759
Phone - (512) 617-3100
Web - www.freese.com

CITY OF LAGO VISTA
EFFLUENT POND #14 LINER REPLACEMENT AND PRESSURIZED PIPELINE TO POND #2
GENERAL
GENERAL NOTES

F&N JOB NO. LGV23021
DATE 3/21/2025
DESIGNED BET
DRAWN SRL
CHECKED JJG
APPROVED HGO

NO.	ISSUE	BY	DATE

FILE NAME

VERIFY SCALE Bar is one inch on original drawing. If not one inch on this sheet, adjust scale.
0 1

SHEET G-2
SEQ. 2 OF 31

65% SUBMITTAL

ACAD Rel: 25.0s (LMS Tech)
Filename: N:\WRD\Drawings\AMENDMENT 1\GN-ALL-NOTES.dwg
Last Saved: 3/18/2025 1:11 PM Saved By: 08354

Plot Date: 3/21/2025 2:38 PM Plot By: 08354 Filename: N:\WRD\Drawings\AMENDMENT 1\GN-ALL-NOTES.dwg

GENERAL CONSTRUCTION NOTES:

1. THE CONTRACTOR IS TO CONTACT ONE OF THE FOLLOWING:
   TEXAS811 811
   LONE STAR 1-800-669-8344
   FOR LOCATION OF EXISTING FACILITIES AT LEAST 48 HOURS PRIOR TO COMMENCEMENT OF ANY CONSTRUCTION ACTIVITIES.
2. PRIOR TO ANY CONSTRUCTION, THE DESIGN ENGINEER SHALL CONVENE A PRE-CONSTRUCTION CONFERENCE BETWEEN THE CITY OF LAGO VISTA, HIMSELF, THE CONTRACTOR, OTHER UTILITY COMPANIES, ANY AFFECTED PARTIES AND ANY OTHER ENTITY THE CITY OR ENGINEER MAY REQUIRE. IF CONSTRUCTION IS NOT STARTED ON THE SITE WITHIN 30 CALENDAR DAYS AFTER THE PRE-CONSTRUCTION CONFERENCE, THE ENGINEER SHALL CONVENE A NEW PRECONSTRUCTION CONFERENCE BETWEEN THE CITY OF LAGO VISTA, HIMSELF, AND ALL THE ABOVE MENTIONED ENTITIES.
3. PRIOR TO ANY CHANGES TO THE CONSTRUCTION SITE, VIDEO OF THE SITE MUST BE TAKEN AND PROVIDED TO THE CITY BEFORE CONSTRUCTION COMMENCES.
4. ALL CONSTRUCTION OPERATIONS SHALL BE PERFORMED IN ACCORDANCE WITH CITY OF LAGO VISTA ENGINEERING MANUAL AND STANDARD CONSTRUCTION SPECIFICATIONS AND DETAILS. IF CITY OF LAGO VISTA ENGINEERING MANUAL UNAVAILABLE, OR NOT APPLICABLE, REFER TO TXDOT AND/OR CITY OF GEORGETOWN MANUAL, STANDARDS AND/OR SPECIFICATIONS.
5. ALL CONSTRUCTION OPERATIONS SHALL BE ACCOMPLISHED IN ACCORDANCE WITH APPLICABLE REGULATIONS OF THE U.S. OCCUPATIONAL SAFETY AND HEALTH ADMINISTRATION. OSHA STANDARDS MAY BE PURCHASED FROM THE GOVERNMENT PRINTING OFFICE; INFORMATION AND RELATED REFERENCE MATERIALS MAY BE PURCHASED FROM OSHA, 611 E. 6TH STREET, AUSTIN, TEXAS.
6. CONTRACTOR SHALL TAKE ALL DUE PRECAUTIONS TO PROTECT EXISTING FACILITIES FROM DAMAGE. ANY DAMAGE INCURRED TO EXISTING FACILITIES AS A RESULT OF CONSTRUCTION OPERATIONS TO BE REPAIRED IMMEDIATELY BY THE CONTRACTOR, AT NO ADDITIONAL COST TO OWNER.
7. CONTRACTOR TO GIVE NOTICE TO ALL AUTHORIZED INSPECTORS, SUPERINTENDENTS OR PERSONS IN CHARGE OF PUBLIC AND PRIVATE UTILITIES AFFECTED BY HIS OPERATIONS AT LEAST 48 HOURS PRIOR TO COMMENCEMENT OF WORK.
8. CONTRACTOR TO COMPLY WITH ALL APPLICABLE LOCAL, STATE, AND FEDERAL REQUIREMENTS REGARDING EXCESS AND WASTE MATERIAL, INCLUDING METHODS OF HANDLING AND DISPOSAL.
9. CONTRACTOR TO COORDINATE INTERRUPTIONS OF ALL UTILITIES AND SERVICES. ALL WORK TO BE IN ACCORDANCE WITH THE REQUIREMENTS OF THE APPLICABLE UTILITY COMPANY OR AGENCY INVOLVED.
10. WHEN UN-LOCATED OR INCORRECTLY LOCATED, A BREAK IN UTILITY LINES, OR OTHER UTILITIES AND SERVICES ARE ENCOUNTERED DURING SITE WORK OPERATIONS, CONTRACTOR SHALL NOTIFY THE APPLICABLE UTILITY COMPANY IMMEDIATELY TO OBTAIN PROCEDURE DIRECTIONS. CONTRACTOR SHALL COOPERATE WITH THE APPLICABLE UTILITY COMPANY IN MAINTAINING ACTIVE SERVICES IN OPERATION.
11. CONTRACTOR TO LOCATE, PROTECT, AND MAINTAIN BENCHMARKS, MONUMENTS, CONTROL POINTS AND PROJECT ENGINEERING REFERENCE POINTS. RE-ESTABLISH DISTURBED OR DESTROYED ITEMS BY REGISTERED PROFESSIONAL LAND SURVEYOR IN THE STATE OF TEXAS, AT NO ADDITIONAL COST TO WHEN CONSTRUCTION IS BEING CARRIED OUT WITHIN EASEMENTS, THE CONTRACTOR SHALL CONFINE HIS WORK TO WITHIN THE PERMANENT AND TEMPORARY EASEMENTS. PRIOR TO FINAL ACCEPTANCE, THE CONTRACTOR SHALL BE RESPONSIBLE FOR REMOVING ALL TRASH AND DEBRIS WITHIN THE PERMANENT AND TEMPORARY EASEMENTS. CLEAN-UP SHALL BE TO THE SATISFACTION OF THE ENGINEER.
12. THE CONTRACTOR AND THE ENGINEER SHALL KEEP ACCURATE RECORDS OF ALL CONSTRUCTION THAT DEVIATES FROM THE PLANS. ACCURATE "RECORD" DRAWINGS WILL BE PROVIDED TO THE CITY OF LAGO VISTA, ALONG WITH A LETTER CERTIFICATION FROM A REGISTERED PROFESSIONAL ENGINEER LICENSED IN THE STATE OF TEXAS, STATING THAT SAID PROJECT APPEARS TO HAVE BEEN CONSTRUCTED IN ACCORDANCE WITH THESE PLANS, PRIOR TO THE OWNER BEING ISSUED A CERTIFICATION OF COMPLETION AND FINAL ACCEPTANCE. THESE "RECORD" DRAWINGS SHALL MEET WITH THE SATISFACTION OF THE ENGINEERING AND DEVELOPMENT SERVICES DEPARTMENTS PRIOR TO FINAL ACCEPTANCE.
13. CONTRACTOR SHALL STRIP SIX (6) INCHES OF TOPSOIL FROM ALL AREAS SUBJECT TO GRADE MODIFICATION. REMOVE ALL AREAS OF WEAK SOIL.
14. THE CONTRACTOR SHALL PROTECT ALL EXISTING FENCES. IN THE EVENT THAT A FENCE MUST BE REMOVED, THE CONTRACTOR SHALL REPLACE SAID FENCE OR PORTION THEREOF WITH THE SAME TYPE OF FENCING TO A QUALITY OF EQUAL OR BETTER THAN THE ORIGINAL FENCE.
15. UPON COMPLETION OF THE PROJECT, THE SITE(S) AS DEFINED HEREIN SHALL BE CLEANED OF ALL DEBRIS AND LEFT IN A NEAT AND PRESENTABLE CONDITION.
16. ALL ADJOINING PAVEMENT SECTIONS SHALL BE PROTECTED DURING ALL PHASES OF CONSTRUCTION AND ANY DAMAGES INCURRED DUE TO CONTRACTOR'S OPERATION SHALL BE REPAIRED AND/OR REPLACED AT THE CONTRACTOR'S EXPENSE.
17. CONTRACTOR TO CONTROL DUST CAUSED BY THE WORK AND COMPLY WITH POLLUTION CONTROL REGULATIONS OF GOVERNING AUTHORITIES (NO SEPARATE PAY).
18. CONTRACTOR TO SUBMIT A TRAFFIC CONTROL PLAN TO BE APPROVED BY THE CITY. TRAFFIC CONTROLS TO BE INSTALLED IN ACCORDANCE WITH THE CURRENT TXDOT MANUAL ON UNIFORM TRAFFIC CONTROL DEVICES AND TXDOT BARRICADE AND CONSTRUCTION STANDARDS.
19. REVEGETATE ALL DISTURBED AREAS UPON COMPLETION OF THE WORK PER CITY OF LAGO VISTA CONSTRUCTION STANDARDS.
20. CONTRACTOR TO EXERCISE CAUTION DURING CONSTRUCTION NEAR AND AROUND GAS LINES AND POWER LINES.
25. NO WORK IS TO BE PERFORMED BETWEEN THE HOURS OF 6:00 P.M. AND 7:00 A.M. ALL WORK REQUIRING CITY INSPECTION SHALL BE PERFORMED MONDAY THRU FRIDAY. THE CITY RESERVES THE RIGHT TO REQUIRE THE CONTRACTOR TO UNCOVER ALL WORK PERFORMED WITHOUT INSPECTION.
26. THE CONTRACTOR SHALL DETERMINE THE EXACT LOCATION VERTICALLY AND HORIZONTALLY OF ALL EXISTING UTILITIES PRIOR TO COMMENCING WORK, AND SHALL NOTIFY THE ENGINEER AND THE CITY IF THE EXISTING UTILITY LOCATION AND DEPTHS ARE DIFFERENT FROM WHAT IS SHOWN ON THE PLANS. THE CONTRACTOR AGREES TO BE FULLY RESPONSIBLE FOR ANY AND ALL DAMAGES WHICH MIGHT BE ASSOCIATED BY THE CONTRACTOR'S FAILURE TO EXACTLY LOCATE AND PRESERVE ANY AND ALL UNDERGROUND UTILITIES.
27. DETECTABLE TAPE SHALL BE USED FOR ALL UNDERGROUND UTILITIES. TAPE MUST BE 12" WIDE 5 MIL WITH APPLICABLE COLOR AND LABEL.
28. CONTRACTOR WILL BE RESPONSIBLE FOR KEEPING ROADS AND DRIVES ADJACENT TO AND NEAR THE SITE FREE FROM SOIL, SEDIMENT AND DEBRIS. CONTRACTOR WILL NOT REMOVE SOIL, SEDIMENT OR DEBRIS FROM ANY AREA OR VEHICLE BY MEANS OF WATER, ONLY SHOVELING AND SWEEPING WILL BE ALLOWED. CONTRACTOR WILL BE RESPONSIBLE FOR DUST CONTROL FROM THE SITE.
29. THE CONTRACTOR SHALL BE RESPONSIBLE FOR ALL DAMAGE TO PRIVATE PROPERTY WHICH OCCURS AS A RESULT OF ANY PORTION OF THIS PROJECT. ANY DAMAGE TO PRIVATE PROPERTY SHALL BE REPAIRED TO EQUAL OR BETTER CONDITION. THE CONTRACTOR SHALL PAY AND/OR SETTLE WITH PRIVATE PROPERTY OWNER(S) FOR ALL COST RELATED TO DAMAGE. THE CITY WILL NOT PROVIDE SEPARATE PAY FOR REPAIR OF DAMAGES, REIMBURSEMENTS OR SETTLEMENTS.

EROSION, SEDIMENTATION AND TREE PROTECTION NOTES:

1. THE CONTRACTOR TO INSTALL AND MAINTAIN EROSION/SEDIMENTATION CONTROLS AND TREE/NATURAL AREA PROTECTIVE FENCING PRIOR TO ANY SITE PREPARATION WORK (CLEARING, GRUBBING, GRADING, OR EXCAVATION). CONTRACTOR TO REMOVE EROSION/SEDIMENTATION CONTROLS AT THE COMPLETION OF THE PROJECT AND GRASS RESTORATION.
2. THE PLACEMENT OF EROSION/SEDIMENTATION CONTROLS TO BE IN ACCORDANCE WITH THE APPROVED EROSION AND SEDIMENTATION CONTROL PLAN AND STORMWATER POLLUTION PREVENTION PLAN. DEVIATIONS FROM THE APPROVED PLAN MUST BE SUBMITTED TO AND APPROVED BY THE OWNER'S REPRESENTATIVE.
3. ALL PLANTING SHALL BE DONE BETWEEN MAY 1ST AND SEPTEMBER 15TH EXCEPT AS SPECIFICALLY AUTHORIZED IN WRITING. IF PLANTING IS AUTHORIZED TO BE DONE OUTSIDE THE DATE SPECIFIED, THE SEED SHALL BE PLANTED WITH THE ADDITION OF WINTER FESCUE (KENTUCKY 31) AT A RATE OF 100 LBS/ACRE. GRASS SHALL BE COMMON BERMUDA GRASS, HULLED, MINIMUM 82% PURE LIVE SEED. ALL GRASS SEED SHALL BE FREE FROM NOXIOUS WEED, GRAD "A" RECENT CROP, CLEANED AND TREATED WITH APPROPRIATE FUNGICIDE AT TIME OF MIXING. SEED SHALL BE FURNISHED IN SEALED, STANDARD CONTAINERS WITH DEALER'S GUARANTEED ANALYSIS.
4. ALL DISTURBED AREAS TO BE RESTORED AS NOTED IN THE STORMWATER POLLUTION PREVENTION PLAN.
5. THE PLANTED AREA TO BE IRRIGATED OR SPRINKLED IN A MANNER THAT WILL NOT ERODE THE TOPSOIL, BUT WILL SUFFICIENTLY SOAK THE SOIL TO A DEPTH OF FOUR INCHES (4"). THE IRRIGATION TO OCCUR AT 10-DAY INTERVALS DURING THE FIRST TWO MONTHS TO INSURE GERMINATION AND ESTABLISHMENT OF THE GRASS. RAINFALL OCCURRENCES OF ONE HALF AND INCH (1/2") OR GREATER TO POSTPONE THE WATER SCHEDULE ONE WEEK.
6. RESTORATION TO BE ACCEPTABLE WHEN THE GRASS HAS GROWN AT LEAST ONE AND ONE HALF INCHES (1.5") HIGH WITH 95% COVERAGE, PROVIDED NO BARE SPOTS LARGER THAN TWENTY-FIVE SQUARE FEET EXIST.
7. A MINIMUM OF FOUR INCHES (4") OF TOPSOIL TO BE PLACE IN ALL AREA DISTURBED BY CONSTRUCTION.
8. THE CONTRACTOR TO HYDRO MULCH OR SOD ALL EXPOSED CUTS AND FILLS UPON COMPLETION OF CONSTRUCTION.
9. EROSION AND SEDIMENTATION CONTROLS TO BE INSTALLED OR MAINTAINED IN A MANNER WHICH DOES NOT RESULT IN SOIL BUILDUP WITHIN TREE DRIP LINE.
10. TO AVOID SOIL COMPACTION, CONTRACTOR SHALL NOT ALLOW VEHICULAR TRAFFIC, PARKING, OR STORAGE OF EQUIPMENT OR MATERIALS IN THE TREE DRIP LINE AREA.
11. WHERE A FENCE IS CLOSER THAN FOUR FEET (4') TO A TREE TRUCK, PROTECT THE TRUNK WITH STRAPPED-ON PLANKING TO A HEIGHT OF EIGHT FEET (8'), OR THE LIMITS OF LOWER BRANCHING, IN ADDITION TO THE FENCING.
12. TREES TO BE REMOVED IN A MANNER WHICH DOES NOT IMPACT TREES TO BE PRESERVED.
13. ANY ROOT EXPOSED BY THE CONSTRUCTION ACTIVITY TO BE PRUNED FLUSH WITH THE SOIL. BACKFILL ROOT AREA WITH GOOD QUALITY TOPSOIL AS SOON AS POSSIBLE. IF EXPOSED ROOT AREAS ARE NOT BACKFILLED WITHIN TWO DAYS, COVER THEM WITH ORGANIC MATTER IN A MANNER WHICH REDUCES SOIL TEMPERATURE AND MINIMIZES WATER LOSS DUE TO EVAPORATION.
14. CONTRACTOR TO PRUNE VEGETATION TO PROVIDE CLEARANCE FOR STRUCTURE, VEHICULAR TRAFFIC, AND EQUIPMENT BEFORE DAMAGE OCCURS (RIPPING OF BRANCHES, ETC.). ALL FINISHED PRUNING TO BE DONE ACCORDING TO RECOGNIZED, APPROVED STANDARDS OF THE INDUSTRY (REFERENCE THE "NATIONAL ARBORIST ASSOCIATION PRUNING STANDARDS FOR SHADE TREES").
15. THE CONTRACTOR IS TO INSPECT THE CONTROLS AT WEEKLY INTERVALS AND AFTER EVERY RAINFALL EXCEEDING ONE-QUARTER INCH (1/4") TO VERIFY THAT THEY HAVE NOT BEEN SIGNIFICANTLY DISTURBED. ANY ACCUMULATED SEDIMENT AFTER A SIGNIFICANT RAINFALL TO BE REMOVED AND PLACED IN THE OWNER DESIGNATED SPOIL DISPOSAL SITE. THE CONTRACTOR TO CONDUCT PERIODIC INSPECTIONS OF ALL EROSION/SEDIMENTATION CONTROLS AND TO MAKE ANY REPAIRS OR MODIFICATIONS NECESSARY TO ASSURE CONTINUED EFFECTIVE OPERATION OF EACH DEVICE. WHERE THERE IS TO BE AN APPROVED GRADE CHANGE, IMPERMEABLE PAVING SURFACE, TREE WELL, OR OTHER SUCH SITE DEVELOPMENT IMMEDIATELY ADJACENT TO A PROTECTED TREE, ERECT THE FENCE APPROXIMATELY TWO TO FOUR FEET (2'-4') BEHIND THE AREA IN QUESTION.
16. NO ABOVE AND/OR BELOW GROUND TEMPORARY FUEL STORAGE FACILITIES TO BE STORED ON THE PROJECT SITE.
17. IF EROSION AND SEDIMENTATION CONTROL SYSTEMS ARE EXISTING FROM PRIOR CONTRACTS, OWNER'S REPRESENTATIVE AND THE CONTRACTOR TO EXAMINE THE EXISTING EROSION AND SEDIMENTATION CONTROL SYSTEMS FOR DAMAGE PRIOR TO CONSTRUCTION. ANY DAMAGE TO PREEXISTING EROSION AND SEDIMENTATION CONTROLS NOTED TO BE REPAIRED AT OWNER'S EXPENSE.
18. INTENTIONAL RELEASE OF VEHICLE OR EQUIPMENT FLUIDS ONTO THE GROUND IS NOT ALLOWED. CONTAMINATED SOIL RESULTING FROM ACCIDENTAL SPILL TO BE REMOVED AND DISPOSED OF PROPERLY.

WATER NOTES:

1. WATER SYSTEMS SHALL BE CONSTRUCTED IN ACCORDANCE WITH CITY OF LAGO VISTA ENGINEERING MANUAL, STANDARD SPECIFICATIONS AND STANDARD DETAILS.
2. FIRE HYDRANTS ON MAINS UNDER CONSTRUCTION SHALL BE SECURELY WRAPPED WITH A POLY WRAP BAG AND TAPED INTO PLACE. THE POLY WRAP SHALL BE REMOVED WHEN THE MAINS ARE ACCEPTED AND BROUGHT INTO SERVICE. ALL FIRE LINES SHALL BE DUCTILE IRON.
3. ALL WATER SERVICE, WASTEWATER SERVICE, AND VALVE LOCATIONS SHALL BE APPROPRIATELY MARKED AS FOLLOWS:
   A. WATER SERVICE "W" ON TOP OF CURB
   B. VALVE "V" ON TOP OF CURB OR VALVE SIGN AS INSTRUCTED BY CITY ENGINEER
4. TOOLS FOR MARKING CURBS SHALL BE PROVIDED BY THE CONTRACTOR. OTHER APPROPRIATE MEANS OF MARKING SERVICE AND VALVE LOCATIONS SHALL BE PROVIDED IN AREAS WITHOUT CURBS. SUCH MEANS OF MARKING SHALL BE SPECIFIED BY THE ENGINEER AND APPROVED BY THE CITY OF LAGO VISTA.
5. THRUST BLOCKING AND RESTRAINTS SHALL BE IN ACCORDANCE WITH CITY OF LAGO VISTA STANDARD SPECIFICATIONS.
6. HYDROSTATIC PRESSURE AND LEAKAGE TESTS SHALL BE PERFORMED ON ALL PRESSURE PIPELINES CARRYING WATER.
7. ALL NEWLY INSTALLED PIPES AND RELATED PRODUCTS MUST CONFORM TO AMERICAN NATIONAL STANDARDS INSTITUTE MUST BE CERTIFIED BY AN ORGANIZATION ACCREDITED BY ANSI.
8. PIPE MATERIAL FOR WATER MAINS SHALL BE PVC (AWWA C900/C905, MIN. DR 18), OR DUCTILE IRON (AWWA C151, MIN. CLASS 350). WATER SERVICES (2" OR SMALLER) SHALL BE POLYETHYLENE TUBING (BLACK, 200 PSI, DR 9).
9. ALL DUCTILE IRON PIPE (D.I.P) SHALL BE WRAPPED WITH EIGHT (8) MIL, BLACK VIRGIN POLYETHYLENE WRAP AS SPECIFIED IN ANSI/AWWA C105/A21.5.
10. ALL D.I.P. SHALL BE LINED WITH VIRGIN POLYETHYLENE CONFORMING TO ASTM D-1248; 40 MIL THICKNESS (NOMINAL), 35 MILS (MINIMUM). LINER TO BE POLYBOND OR EQUAL. AT ANY POINT WHERE CANNOT BE WRAPPED IN POLYETHYLENE, COAT THE EXTERIOR WITH POLYBOND OR APPROVED EQUAL.
11. ALL PVC PIPE (ALL TYPES AND SDR/DR WALL THICKNESS TO BE USED) SHALL HAVE RUBBER GASKET EQUIPPED BELL AND SPIGOT JOINTS CONFORMING TO ASTM D-3212. THE GASKET MATERIAL SHALL CONFORM TO ASTM F-477. SOLVENT WELDED JOINTS WILL NOT BE APPROVED FOR THIS PROJECT.
12. ALL POTABLE WATERLINES AND SANITARY SEWER FACILITIES MUST BE INSTALLED SO AS TO PROVIDE A MINIMUM OF NINE FEET OF CLEARANCE IN ANY DIRECTION BETWEEN THEM. WHERE THE NINE FOOT SEPARATION DISTANCE CANNOT BE ACHIEVED, FOLLOW THESE SPECIAL PROCEDURES.

   A. IF A COLLECTION SYSTEM PIPE PARALLELS A PUBLIC WATER SUPPLY PIPE THE FOLLOWING REQUIREMENTS APPLY:

   - A COLLECTION SYSTEM PIPE MUST BE CONSTRUCTED OF CAST IRON, DUCTILE IRON, OR PVC MEETING ASTM SPECIFICATIONS WITH AT LEAST 150 POUNDS PER SQUARE INCH (PSI) PRESSURE RATING FOR BOTH THE PIPE AND JOINTS
   - VERTICAL SEPARATION MUST BE AT LEAST TWO FEET BETWEEN THE OUTSIDE DIAMETERS OF THE PIPES.
   - HORIZONTAL SEPARATION MUST BE AT LEAST FOUR FEET BETWEEN OUTSIDE DIAMETERS OF THE PIPES.
   - COLLECTION SYSTEM PIPE MUST BE BELOW WATER SUPPLY PIPE.

   B. IF A COLLECTION SYSTEM PIPE CROSSES A PUBLIC WATER SUPPLY PIPE, THE FOLLOWING REQUIREMENTS APPLY:

   - IF A COLLECTION SYSTEM IS CONSTRUCTED OF CAST IRON, DUCTILE IRON, OR PVC WITH A MINIMUM PRESSURE RATING OF 150 PSI, THE FOLLOWING REQUIREMENTS APPLY:

     a. A MINIMUM DISTANCE OF SIX (6) INCHES BETWEEN OUTSIDE DIAMETERS OF THE PIPES.
     b. A COLLECTION SYSTEM PIPE MUST BE BELOW A PUBLIC WATER SUPPLY PIPE.
     c. COLLECTION SYSTEM PIPE JOINTS MUST BE LOCATED AS FAR AS POSSIBLE FROM AN INTERSECTION WITH A PUBLIC WATER SUPPLY LINE.

   C. IF A COLLECTION SYSTEM CROSSES OVER A PUBLIC WATER SUPPLY PIPE, EACH PORTION OF A COLLECTION SYSTEM PIPE WITHIN NINE FEET OF A PUBLIC WATER SUPPLY PIPE MUST BE CONSTRUCTED OF CAST IRON, DUCTILE IRON, OR PVC PIPE WITH A PRESSURE RATING OF AT LEAST 150 PSI USING APPROPRIATE ADAPTERS.

13. THE CONTRACTOR MUST OBTAIN A TEMPORARY WATER METER FROM THE CITY OF LAGO VISTA UTILITY BILLING DEPARTMENT FOR ALL WATER USED DURING CONSTRUCTION.
14. CONTRACTOR TO SCHEDULE WATER VALVE CLOSURE THROUGH CITY OF LAGO VISTA: DEPARTMENT OF PUBLIC WORKS - UTILITY DIVISION WITH ADVANCE NOTICE OF 7 DAYS. CONTRACTOR TO CONTACT PUBLIC WORKS AT PHONE #XXX-XXX-XXXX. WATER VALVE CLOSURE WILL ONLY BE SCHEDULED FOR TUESDAY THROUGH THURSDAY. CONTRACTOR TO NOTIFY ALL BUSINESSES AND RESIDENTS AFFECTED BY VALVE CLOSURES. CLOSURES MUST BE COORDINATED TO MINIMIZE EFFECTS ON EXISTING CUSTOMERS WITH CONSIDERATIONS GIVEN TO BUSINESSES THAT REQUIRE WATER TO MAINTAIN OPERATIONS.
15. LINE FLUSHING OR ANY ACTIVITY USING A LARGE QUANTITY OF WATER MUST BE SCHEDULED WITH THE CITY OF LAGO VISTA. CONTRACTOR WILL BE RESPONSIBLE FOR TRACKING THE AMOUNT OF WATER USED DURING FLUSHING AND BE REQUIRED TO REIMBURSE THE CITY FOR WATER USE, IF NOT ALREADY METERED.
16. THE CONTRACTOR, AT HIS EXPENSE, SHALL PERFORM STERILIZATION OF ALL POTABLE WATER LINES AND SHALL PROVIDE ALL EQUIPMENT NECESSARY (INCLUDING TEST GAGES), SUPPLIES (INCLUDING CONCENTRATED CHLORINE DISINFECTION MATERIAL) AND NECESSARY LABOR REQUIRED FOR THE STERILIZATION PROCEDURE. THE STERILIZATION PROCEDURE SHALL BE MONITORED BY THE ENGINEER AND A CITY OF LAGO VISTA CONSTRUCTION INSPECTOR. WATER SAMPLES WILL BE COLLECTED TO VERIFY EACH TREATED LINE HAS ATTAINED AN INITIAL CHLORINE CONCENTRATION OF 50 PPM.
17. AN INDEPENDENT QUALIFIED LAB, AT THE CONTRACTOR'S EXPENSE, SHALL PERFORM QUALITY TESTING FOR ALL WASTEWATER PIPE INSTALLED AND PRESSURE HYDROSTATIC TESTING OF ALL WATER LINES CONSTRUCTED. THE CONTRACTOR SHALL PROVIDE ALL EQUIPMENT (INCLUDING PUMPS AND GAGES), SUPPLIES, AND LABOR NECESSARY TO PERFORM THE TESTS. A CITY OF LAGO VISTA CONSTRUCTION INSPECTOR MUST BE PRESENT FOR ALL TESTING.
18. THE CONTRACTOR SHALL PROVIDE THE ENGINEER AND THE CITY NOT LESS THAN 24 HOURS NOTICE PRIOR TO PERFORMING STERILIZATION, QUALITY TESTING, OR PRESSURE TESTING.
19. THE CONTRACTOR SHALL NOT OPEN OR CLOSE ANY VALVES UNLESS AUTHORIZED BY THE CITY OF LAGO VISTA.
20. ALL VALVE BOXES AND COVERS SHALL BE CAST IRON PER CITY OF LAGO VISTA STANDARD DETAILS.
21. ALL FIRE LINES SHALL BE DUCTILE IRON PIPE (AWWA C-100, CLASS 200).
22. ALL FIRE HYDRANTS SHALL BE SILVER IN COLOR INCLUDING BONNET AND INSTALLED PER CITY OF LAGO VISTA STANDARD DETAIL.
23. ALL WATER PIPING AND FITTINGS SHALL BE VIRGIN STOCK.
24. ALL MECHANICAL RESTRAINTS SHALL BE INSTALLED PER MANUFACTURER'S SPECIFICATIONS.
25. ALONG STATE HIGHWAYS, WATER LINES ARE REQUIRED ON BOTH SIDES OF THE ROADWAY. NEW WATER LINES CROSSING EXISTING STREETS SHALL BE PLACED BY BORING. A STEEL CASING SHALL BE REQUIRED UNDER MAJOR AND MINOR COLLECTOR ROADWAYS, ARTERIAL ROADWAYS AND STATE HIGHWAY. OPEN CUT EXCAVATION WILL NOT BE ALLOWED TO CROSS EXISTING STREETS, UNLESS APPROVED BY THE CITY ENGINEER.
26. ALL NEW WATER PIPES MUST HAVE DETECTABLE TAPE PER CITY OF LAGO VISTA STANDARD DETAIL.
27. ALL AUTOMATIC FLUSH VALVES MUST USE A METER TO MEASURE WATER LOSS.
28. TRACER WIRE WILL BE TESTED AND MUST WORK CORRECTLY BEFORE CITY ACCEPTANCE OF INFRASTRUCTURE. TRACER WIRE MUST BE ENCASED IN PIPE.
29. ALL REDUCED SIZE TAPS SHALL BE MADE USING AN EPOXY COATED FABRICATED STEEL TAPPING SLEEVE WITH STAINLESS STEEL BOLTS, OR A STAINLESS STEEL FULL CIRCLE TAPPING SLEEVE WITH DUCTILE IRON FLANGE.

TCEQ WATER DISTRIBUTION SYSTEM GENERAL CONSTRUCTION NOTES

1. THIS WATER DISTRIBUTION SYSTEM MUST BE CONSTRUCTED IN ACCORDANCE WITH THE CURRENT TEXAS COMMISSION ON ENVIRONMENTAL QUALITY (TCEQ) RULES AND REGULATIONS FOR PUBLIC WATER SYSTEMS 30 TEXAS ADMINISTRATIVE CODE (TAC) CHAPTER 290 SUBCHAPTER D. WHEN CONFLICTS ARE NOTED WITH LOCAL STANDARDS, THE MORE STRINGENT REQUIREMENT SHALL BE APPLIED. AT A MINIMUM, CONSTRUCTION FOR PUBLIC WATER SYSTEMS MUST ALWAYS MEET TCEQ'S "RULES AND REGULATIONS FOR PUBLIC WATER SYSTEMS."
2. ALL NEWLY INSTALLED PIPES AND RELATED PRODUCTS MUST CONFORM TO AMERICAN NATIONAL STANDARDS INSTITUTE (ANSI)/NSF INTERNATIONAL STANDARD 61 AND MUST BE CERTIFIED BY AN ORGANIZATION ACCREDITED BY ANSI.
3. PLASTIC PIPE FOR USE IN PUBLIC WATER SYSTEMS MUST BEAR THE NSF INTERNATIONAL SEAL OF APPROVAL (NSF-PW) AND HAVE AN ASTM DESIGN PRESSURE RATING OF AT LEAST 150 PSI OR A STANDARD DIMENSION RATIO OF 26 OR LESS.
4. NO PIPE WHICH HAS BEEN USED FOR ANY PURPOSE OTHER THAN THE CONVEYANCE OF DRINKING WATER SHALL BE ACCEPTED OR RELOCATED FOR USE IN ANY PUBLIC DRINKING WATER SUPPLY.
5. ALL WATER LINE CROSSINGS OF WASTEWATER MAINS SHALL BE PERPENDICULAR.
6. WATER TRANSMISSION AND DISTRIBUTION LINES SHALL BE INSTALLED IN ACCORDANCE WITH THE MANUFACTURER'S INSTRUCTIONS. HOWEVER, THE TOP OF THE WATER LINE MUST BE LOCATED BELOW THE FROST LINE AND IN NO CASE SHALL THE TOP OF THE WATER LINE BE LESS THAN 24 INCHES BELOW GROUND SURFACE.
7. THE MAXIMUM ALLOWABLE LEAD CONTENT OF PIPES, PIPE FITTINGS, PLUMBING FITTINGS, AND FIXTURES IS 0.25 PERCENT.
8. THE CONTRACTOR SHALL INSTALL APPROPRIATE AIR RELEASE DEVICES WITH VENT OPENINGS TO THE ATMOSPHERE COVERED WITH 16-MESH OR FINER, CORROSION RESISTANT SCREENING MATERIAL OR AN ACCEPTABLE EQUIVALENT.
9. THE CONTRACTOR SHALL NOT PLACE THE PIPE IN WATER OR WHERE IT CAN BE FLOODED WITH WATER OR SEWAGE DURING ITS STORAGE OR INSTALLATION.
10. WHEN WATERLINES ARE LAID UNDER ANY FLOWING OR INTERMITTENT STREAM OR SEMI-PERMANENT BODY OF WATER THE WATERLINE SHALL BE INSTALLED IN A SEPARATE WATERTIGHT PIPE ENCASEMENT. VALVES MUST BE PROVIDED ON EACH SIDE OF THE CROSSING WITH FACILITIES TO ALLOW THE UNDERWATER PORTION OF THE SYSTEM TO BE ISOLATED AND TESTED.
11. PURSUANT TO 30 TAC §290.44(A)(5), THE HYDROSTATIC LEAKAGE RATE SHALL NOT EXCEED THE AMOUNT ALLOWED OR RECOMMENDED BY THE MOST CURRENT AWWA FORMULAS FOR PVC PIPE, CAST IRON AND DUCTILE IRON PIPE. INCLUDE THE FORMULAS IN THE NOTES ON THE PLANS.
    - THE HYDROSTATIC LEAKAGE RATE FOR POLYVINYL CHLORIDE (PVC) PIPE AND APPURTENANCES SHALL NOT EXCEED THE AMOUNT ALLOWED OR RECOMMENDED BY FORMULAS IN AMERICA WATER WORKS ASSOCIATION (AWWA) C-605 AS REQUIRED IN 30 TAC §290.44(A)(5). PLEASE ENSURE THAT THE FORMULA FOR THIS CALCULATION IS CORRECT AND MOST CURRENT FORMULA IS IN USE;

      $$Q = \frac{LD\sqrt{P}}{148{,}000}$$

      WHERE:
      - Q = THE QUANTITY OF MAKEUP WATER IN GALLONS PER HOUR,
      - L = THE LENGTH OF THE PIPE SECTION BEING TESTED, IN FEET,
      - D = THE NOMINAL DIAMETER OF THE PIPE IN INCHES, AND
      - P = THE AVERAGE TEST PRESSURE DURING THE HYDROSTATIC TEST IN POUNDS PER SQUARE INCH (PSI).
    - THE HYDROSTATIC LEAKAGE RATE FOR DUCTILE IRON (DI) PIPE AND APPURTENANCES SHALL NOT EXCEED THE AMOUNT ALLOWED OR RECOMMENDED BY FORMULAS IN AMERICA WATER WORKS ASSOCIATION (AWWA) C-600 AS REQUIRED IN 30 TAC §290.44(A)(5). PLEASE ENSURE THAT THE FORMULA FOR THIS CALCULATION IS CORRECT AND MOST CURRENT FORMULA IS IN USE;

      $$L = \frac{SD\sqrt{P}}{148{,}000}$$

      WHERE:
      - L = THE QUANTITY OF MAKEUP WATER IN GALLONS PER HOUR,
      - S = THE LENGTH OF THE PIPE SECTION BEING TESTED, IN FEET,
      - D = THE NOMINAL DIAMETER OF THE PIPE IN INCHES, AND
      - P = THE AVERAGE TEST PRESSURE DURING THE HYDROSTATIC TEST IN POUNDS PER SQUARE INCH (PSI).
12. THE CONTRACTOR SHALL MAINTAIN A MINIMUM SEPARATION DISTANCE IN ALL DIRECTIONS OF NINE FEET BETWEEN THE PROPOSED WATERLINE AND WASTEWATER COLLECTION FACILITIES INCLUDING MANHOLES. IF THIS DISTANCE CANNOT BE MAINTAINED, THE CONTRACTOR MUST IMMEDIATELY NOTIFY THE PROJECT ENGINEER FOR FURTHER DIRECTION. SEPARATION DISTANCES, INSTALLATION METHODS, AND MATERIALS UTILIZED MUST MEET.
13. THE SEPARATION DISTANCE FROM A POTABLE WATERLINE TO A WASTEWATER MAIN OR LATERAL MANHOLE OR CLEANOUT SHALL BE A MINIMUM OF NINE FEET. WHERE THE NINE-FOOT SEPARATION DISTANCE CANNOT BE ACHIEVED, THE POTABLE WATERLINE SHALL BE ENCASED IN A JOINT OF AT LEAST 150 PSI PRESSURE CLASS PIPE AT LEAST 18 FEET LONG AND TWO NOMINAL SIZES LARGER THAN THE NEW CONVEYANCE. THE SPACE AROUND THE CARRIER PIPE SHALL BE SUPPORTED AT FIVE-FOOT INTERVALS WITH SPACERS OR BE FILLED TO THE SPRINGLINE WITH WASHED SAND. THE ENCASEMENT PIPE SHALL BE CENTERED ON THE CROSSING AND BOTH ENDS SEALED WITH CEMENT GROUT OR MANUFACTURED SEALANT.
14. FIRE HYDRANTS SHALL NOT BE INSTALLED WITHIN NINE FEET VERTICALLY OR HORIZONTALLY OF ANY WASTEWATER LINE, WASTEWATER LATERAL, OR WASTEWATER SERVICE LINE REGARDLESS OF CONSTRUCTION.
15. SUCTION MAINS TO PUMPING EQUIPMENT SHALL NOT CROSS WASTEWATER MAINS, WASTEWATER LATERALS, OR WASTEWATER SERVICE LINES. RAW WATER SUPPLY LINES SHALL NOT BE INSTALLED WITHIN FIVE FEET OF ANY TILE OR CONCRETE WASTEWATER MAIN, WASTEWATER LATERAL, OR WASTEWATER SERVICE LINE.
16. WATERLINES SHALL NOT BE INSTALLED CLOSER THAN TEN FEET TO SEPTIC TANK DRAINFIELDS.
17. THE CONTRACTOR SHALL DISINFECT THE NEW WATERLINES IN ACCORDANCE WITH AWWA.
18. STANDARD C-651-14 OR MOST RECENT, THE

LEGEND

SYMBOL	DESCRIPTION
	PIPE WIDTH & FLOWLINE
	OVERHEAD ELECTRIC
	PROPERTY LINE
	CONTROL POINT
	REBAR SET
	REBAR FOUND
	80D NAIL FOUND
	SIGN
	WOOD BOLLARD POST
	GUY WIRE ANCHOR
	UTILITY POLE
	FIRE HYDRANT
WW	SANITARY MANHOLE
WOV	SANITARY VALVE
	TREE
W	WATER MANHOLE
W	WATER METER
W	WATER VALVE
SS	STORM SEWER MANHOLE
500	EXISTING CONTOUR
500	PROPOSED CONTOUR
	HDPE GEOMEMBRANE
	GEOTEXTILE
	GEONET COMPOSITE WITH GEOTEXTLE BOTH SIDES
W	WATERLINE
LOC	LIMITS OF CONSTRUCTION
SF	SILT FENCE
	SPLIT RAIL WIRE FENCE
EFF	EFFLUENT WATER LINE
G	GAS
SS	SANITARY SEWER
LOC	LIMITS OF CONSTRUCTION
WW	WASTE WATER

	STAGING AREA
	RESTRICTED AREA
	DEMOLITION/CLEARING AND GRUBBING LIMITS
	CONCRETE
	STEEL-REINFORCED SHOTCRETE
	HDPE SYSTEM LINER (PLAN)
	EXTENTS OF BERMUDA GRASS SOD
	IN-SITU MATERIAL

ABBREVIATIONS

BLDG.	BUILDING
C/C	CENTER TO CENTER
CLR	CLEAR COVER
CMP	CORRUGATE METAL PIPE
CONT	CONTINUOUS
DWL	DOWEL
E/A	EDGE OF ASPHALT
EF	EACH FACE
EW	EACH WAY
FL	FLOW LINE
M/P	METAL PIPE (UNKNOWN)
NOM	NOMINAL
PRV	PRESSURE RELEASE VALVE
REINF	REINFORCEMENT
STD	STANDARD
S/P	SANITARY PIPE
S/W	CONC. SIDEWALK
T&B	TOP AND BOTTOM
TYP	TYPICAL
W/S	WALL (STONE)

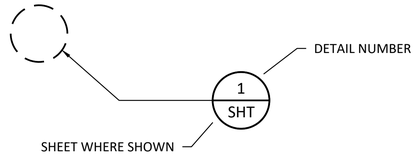

NORTH ARROW

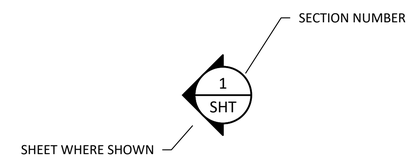

SECTION CUT

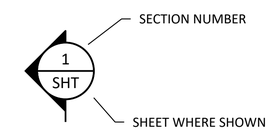

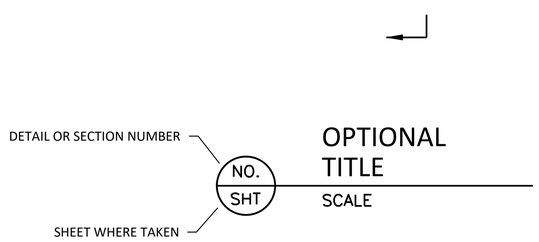

DETAIL OR SECTION TITLE

65% SUBMITTAL

Freese and Nichols, Inc.
Texas Registered Engineering Firm F-2144

NOT FOR CONSTRUCTION
THIS DOCUMENT IS RELEASED FOR THE PURPOSE OF INTERIM REVIEW UNDER THE AUTHORITY OF: BRYCE EARL TODD P.E. TEXAS NO: 145856 ON DATE: 03/21/2025 IT IS NOT TO BE USED FOR CONSTRUCTION, BIDDING OR PERMIT PURPOSES.

FREESE AND NICHOLS
10431 Morado Circle, Suite 300
Austin, Texas 78759
Phone - (512) 617-3100
Web - www.freese.com

CITY OF LAGO VISTA
EFLLUENT POND #14 LINER REPLACEMENT AND PRESSURIZED PIPELINE TO POND #2
GENERAL
LEGEND, ABBREVIATIONS, AND MATERIAL NOTES

NO.	ISSUE	BY	DATE

F&N JOB NO. LGV23021
DATE 3/21/2025
DESIGNED BET
DRAWN SRL
CHECKED JJG
APPROVED HGO
FILE NAME

VERIFY SCALE 0 1
Bar is one inch on original drawing. If not one inch on this sheet, adjust scale.

SHEET G-4
SEQ. 4 OF 31

ACAD Rel: 25.0s (LMS Tech)
Filename: N:\WRD\Drawings\AMENDMENT 1\GN-LEGEND.dwg
Last Saved: 3/21/2025 2:24 PM Saved By: 08354

Plot Date: 3/21/2025 2:42 PM Plot By: 08354 Filename: N:\WRD\Drawings\AMENDMENT 1\GN-LEGEND.dwg

MAJOR COMPONENTS OF WORK:

1. INSTALL 250 LF OF 12" HDPE WATERLINE
2. INSTALL 4274 LF OF 10" HDPE WATERLINE
3. INSTALL RECIRCULATION SYSTEM TO POND #2
4. INSTALL RECIRCULATION SYSTEM TO POND #17
5. DEMO AND HAUL EXISTING LINER AND CONCRETE COLLAR AT POND #14
6. INSTALL HDPE LINER SYSTEM AND SHOTCRETE LINER PROTECTION AT POND #14
7. INSTALL RECIRCULATION SYSTEM TO POND #14
8. TOPSOIL AND SODDING

NORTH

0 300' 600'
SCALE IN FEET

65% SUBMITTAL

Freese and Nichols, Inc.
Texas Registered Engineering Firm F-2144

NOT FOR CONSTRUCTION
THIS DOCUMENT IS RELEASED FOR THE PURPOSE OF INTERIM REVIEW UNDER THE AUTHORITY OF: BRYCE EARL TODD P.E. TEXAS NO: 145856 ON DATE: 03/21/2025 IT IS NOT TO BE USED FOR CONSTRUCTION, BIDDING OR PERMIT PURPOSES.

FREESE AND NICHOLS
10431 Morado Circle, Suite 300
Austin, Texas 78759
Phone - (512) 617-3100
Web - www.freese.com

CITY OF LAGO VISTA
EFLLUENT POND #14 LINER REPLACEMENT AND PRESSURIZED PIPELINE TO POND #2
GENERAL
OVERALL PROJECT LAYOUT

NO.	ISSUE	BY	DATE

F&N JOB NO. LGV23021
DATE 3/21/2025
DESIGNED BET
DRAWN SRL
CHECKED JJG
APPROVED HGO
FILE NAME

VERIFY SCALE 0 1
Bar is one inch on original drawing. If not one inch on this sheet, adjust scale.

SHEET G-5
SEQ. 5 OF 31

ACAD Rel: 25.0s (LMS Tech)
Filename: N:\WRD\Drawings\AMENDMENT 1\GN-OVALL-LAYOUT.dwg
Last Saved: 3/20/2025 7:33 AM Saved By: 08354

Plot Date: 3/21/2025 2:44 PM Plot By: 08354 Filename: N:\WRD\Drawings\AMENDMENT 1\GN-OVALL-LAYOUT.dwg

NORTH

0 300 600
SCALE IN FEET

65% SUBMITTAL

Freese and Nichols, Inc.
Texas Registered Engineering Firm F-2144

NOT FOR CONSTRUCTION
THIS DOCUMENT IS RELEASED FOR THE PURPOSE OF INTERIM REVIEW UNDER THE AUTHORITY OF: ANNE C. HOSKINS P.E. TEXAS NO: 103447 ON DATE: 03/21/2025 IT IS NOT TO BE USED FOR CONSTRUCTION, BIDDING OR PERMIT PURPOSES.

FREESE AND NICHOLS
10431 Morado Circle, Suite 300
Austin, Texas 78759
Phone - (512) 617-3100
Web - www.freese.com

CITY OF LAGO VISTA
EFLLUENT POND #14 LINER REPLACEMENT AND PRESSURIZED PIPELINE TO POND #2

GENERAL

OVERALL WATER LINE LAYOUT

NO.	ISSUE	BY	DATE

F&N JOB NO. LGV23021
DATE 3/21/2025
DESIGNED BET
DRAWN SRL
CHECKED JJG
APPROVED HGO
FILE NAME

VERIFY SCALE 0 1
Bar is one inch on original drawing. If not one inch on this sheet, adjust scale.

SHEET G-6
SEQ. 6 OF 31

ACAD Rel: 25.0s (LMS Tech)
Filename: N:\STANDARD\AMENDMENT 1\WATER LINE\GN-OVERALL.dwg
Last Saved: 3/21/2025 1:22 PM Saved By: 02568

Plot Date: 3/21/2025 2:48 PM Plot By: 08354 Filename: N:\STANDARD\AMENDMENT 1\WATER LINE\GN-OVERALL.dwg

NOTES:
1. PIPE AND HEADWALL IS NOT SHOWN IN AVAILABLE RECORD DATA AND WAS NOT SURVEYED. LOCATION SHOWN IN PLAN VIEW IS APPROXIMATE AND MUST BE FIELD VERIFIED BY CONTRACTOR.

NORTH

0 20' 40'
SCALE IN FEET

Freese and Nichols, Inc.
Texas Registered Engineering Firm F-2144

NOT FOR CONSTRUCTION
THIS DOCUMENT IS RELEASED FOR THE PURPOSE OF INTERIM REVIEW UNDER THE AUTHORITY OF: BRYCE EARL TODD P.E. TEXAS NO: 145856 ON DATE: 03/21/2025 IT IS NOT TO BE USED FOR CONSTRUCTION, BIDDING OR PERMIT PURPOSES.

FREESE AND NICHOLS
10431 Morado Circle, Suite 300
Austin, Texas 78759
Phone - (512) 617-3100
Web - www.freese.com

CITY OF LAGO VISTA
EFLLUENT POND #14 LINER REPLACEMENT AND PRESSURIZED PIPELINE TO POND #2
CIVIL
POND #14 EXISTING CONDITIONS

NO.	ISSUE	BY	DATE

F&N JOB NO. LGV23021
DATE 3/21/2025
DESIGNED BET
DRAWN SRL
CHECKED JJG
APPROVED HGO
FILE NAME

VERIFY SCALE 0 1
Bar is one inch on original drawing. If not one inch on this sheet, adjust scale.

65% SUBMITTAL

SHEET C-1
SEQ. 7 OF 31

ACAD Rel: 25.0s (LMS Tech)
Filename: N:\WRD\Drawings\AMENDMENT 1\CV-PD14-EX-COND.dwg
Last Saved: 3/20/2025 7:40 AM Saved By: 08354

Plot Date: 3/21/2025 2:50 PM Plot By: 08354 Filename: N:\WRD\Drawings\AMENDMENT 1\CV-PD14-EX-COND.dwg

NOTES:
1. STRUCTURE IS NOT SHOWN IN AVAILABLE RECORD DATA AND WAS NOT SURVEYED. LOCATION SHOWN IN PLAN VIEW IS APPROXIMATE AND MUST BE FIELD VERIFIED BY CONTRACTOR. STRUCTURES MUST BE PROTECTED DURING DEMOLITION EFFORTS AND INCORPORATED IN TO THE FINAL PROPOSED CONDITION.
2. THE EXISTING FOUNTAIN HAS TWO WIRE CABLES THAT ATTACH TO WOODEN BOLLARDS OF THE SPLIT RAIL FENCE. THE CABLES AND FOUNTAIN MUST BE REMOVED AND TEMPORARILY STORED. AFTER INSTALLATION OF THE PROPOSED LINER AND SHOTCRETE THE FOUNTAIN MUST BE INSTALLED IN THE SAME CONFIGURATION PRIOR TO REMOVAL.
3. EXCAVATION TO REMOVE THE EXISTING UNDERDRAIN OBSERVATION STRUCTURE WILL IMPACT THE EXISTING CART PATH. CONTRACTOR SHALL REPLACE ANY IMPACTED CART PATH WITH TYPE II SIDEWALK ACCORDING TO DETAIL PV-15 OF THE LAGO VISTA TECHNICAL CONSTRUCTION STANDARD DETAILS.

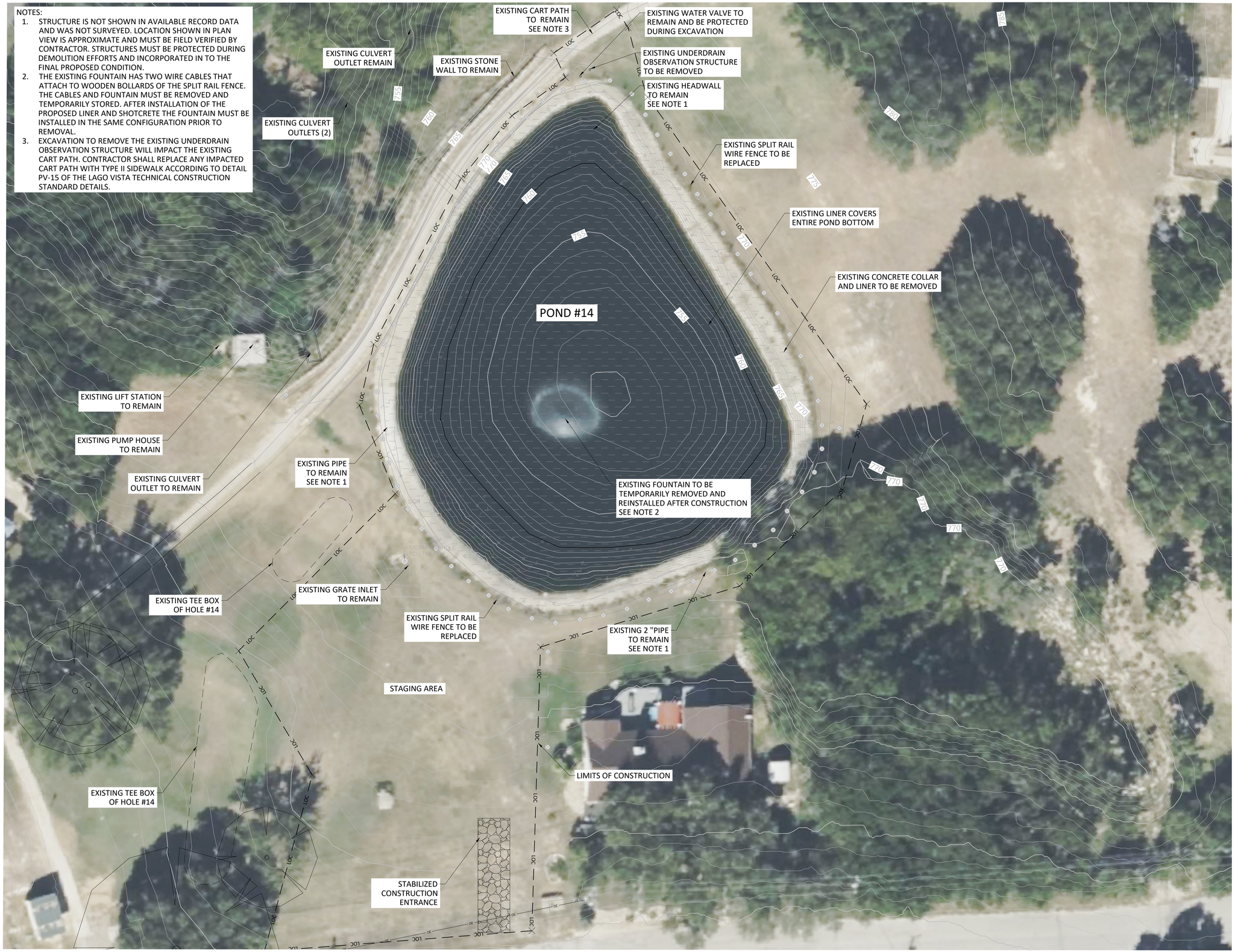

65% SUBMITTAL

Freese and Nichols, Inc.
Texas Registered Engineering Firm F-2144

NOT FOR CONSTRUCTION
THIS DOCUMENT IS RELEASED FOR THE PURPOSE OF INTERIM REVIEW UNDER THE AUTHORITY OF: BRYCE EARL TODD P.E. TEXAS NO: 145856 ON DATE: 03/21/2025 IT IS NOT TO BE USED FOR CONSTRUCTION, BIDDING OR PERMIT PURPOSES.

FREESE AND NICHOLS
10431 Morado Circle, Suite 300
Austin, Texas 78759
Phone - (512) 617-3100
Web - www.freese.com

CITY OF LAGO VISTA
EFLLUENT POND #14 LINER REPLACEMENT AND PRESSURIZED PIPELINE TO POND #2

CIVIL

POND #14 DEMOLITION PLAN

F&N JOB NO.	LGV23021
DATE	3/21/2025
DESIGNED	BET
DRAWN	SRL
CHECKED	JJG
APPROVED	HGO

NO.	ISSUE	BY	DATE

FILE NAME

VERIFY SCALE 0 1
Bar is one inch on original drawing. If not one inch on this sheet, adjust scale.

SHEET C-2

SEQ. 8 OF 31

ACAD Rel: 25.0s (LMS Tech)
Filename: N:\WRD\Drawings\AMENDMENT 1\CV-PD14-DEMO-PL.dwg
Last Saved: 3/20/2025 7:41 AM Saved By: 08354

Plot Date: 3/21/2025 2:52 PM Plot By: 08354 Filename: N:\WRD\Drawings\AMENDMENT 1\CV-PD14-DEMO-PL.dwg

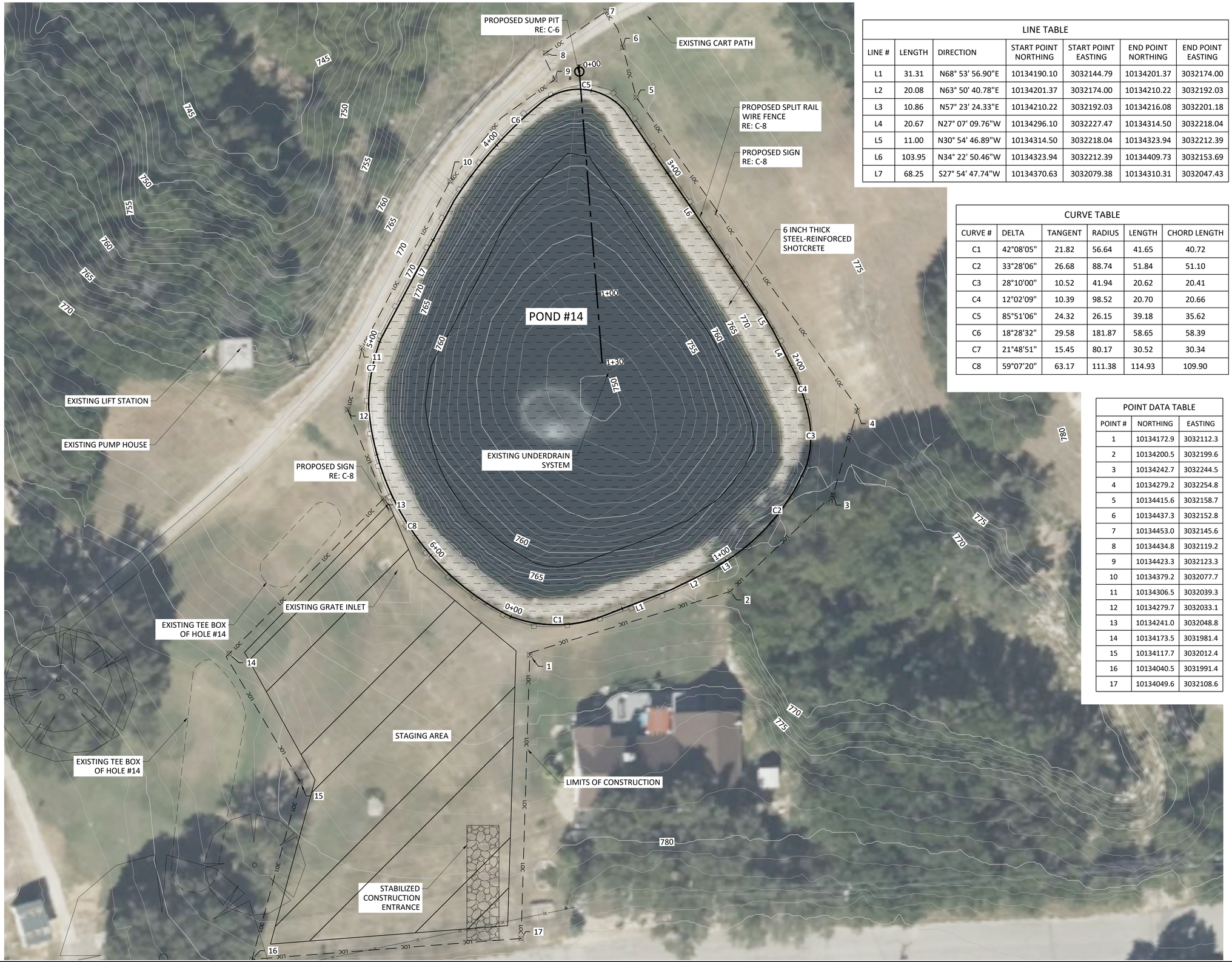

LINE TABLE						
LINE #	LENGTH	DIRECTION	START POINT NORTHING	START POINT EASTING	END POINT NORTHING	END POINT EASTING
L1	31.31	N68° 53' 56.90"E	10134190.10	3032144.79	10134201.37	3032174.00
L2	20.08	N63° 50' 40.78"E	10134201.37	3032174.00	10134210.22	3032192.03
L3	10.86	N57° 23' 24.33"E	10134210.22	3032192.03	10134216.08	3032201.18
L4	20.67	N27° 07' 09.76"W	10134296.10	3032227.47	10134314.50	3032218.04
L5	11.00	N30° 54' 46.89"W	10134314.50	3032218.04	10134323.94	3032212.39
L6	103.95	N34° 22' 50.46"W	10134323.94	3032212.39	10134409.73	3032153.69
L7	68.25	S27° 54' 47.74"W	10134370.63	3032079.38	10134310.31	3032047.43

CURVE TABLE					
CURVE #	DELTA	TANGENT	RADIUS	LENGTH	CHORD LENGTH
C1	42°08'05"	21.82	56.64	41.65	40.72
C2	33°28'06"	26.68	88.74	51.84	51.10
C3	28°10'00"	10.52	41.94	20.62	20.41
C4	12°02'09"	10.39	98.52	20.70	20.66
C5	85°51'06"	24.32	26.15	39.18	35.62
C6	18°28'32"	29.58	181.87	58.65	58.39
C7	21°48'51"	15.45	80.17	30.52	30.34
C8	59°07'20"	63.17	111.38	114.93	109.90

POINT DATA TABLE		
POINT #	NORTHING	EASTING
1	10134172.9	3032112.3
2	10134200.5	3032199.6
3	10134242.7	3032244.5
4	10134279.2	3032254.8
5	10134415.6	3032158.7
6	10134437.3	3032152.8
7	10134453.0	3032145.6
8	10134434.8	3032119.2
9	10134423.3	3032123.3
10	10134379.2	3032077.7
11	10134306.5	3032039.3
12	10134279.7	3032033.1
13	10134241.0	3032048.8
14	10134173.5	3031981.4
15	10134117.7	3032012.4
16	10134040.5	3031991.4
17	10134049.6	3032108.6

NORTH

0 20' 40'
SCALE IN FEET

65% SUBMITTAL

Freese and Nichols, Inc.
Texas Registered Engineering Firm F-2144

NOT FOR CONSTRUCTION
THIS DOCUMENT IS RELEASED FOR THE PURPOSE OF INTERIM REVIEW UNDER THE AUTHORITY OF BRENT E. BET, P.E. TEXAS NO. 145856 ON DATE 03/21/2025 IT IS NOT TO BE USED FOR CONSTRUCTION, BIDDING OR PERMIT PURPOSES.

FREESE NICHOLS
10431 Morado Circle, Suite 300
Austin, Texas 78759
Phone - (512) 617-3100
Web - www.freese.com

CITY OF LAGO VISTA
EFFLUENT POND #14 LINER REPLACEMENT AND PRESSURIZED PIPELINE TO POND #2
CIVIL
POND #14 DIMENSION CONTROL

NO.	ISSUE	BY	DATE

F&N JOB NO.	LGV23021
DATE	3/21/2025
DESIGNED	BET
DRAWN	SRL
CHECKED	JJG
APPROVED	HGO
FILE NAME	

Bar is one inch on original drawing. If not one inch on this sheet, adjust scale.
VERIFY SCALE 1 0

SHEET C-3
SEQ. 9 OF 31

ACAD Rel: 25.0s (LMS Tech)
Filename: N:\WRD\Drawings\AMENDMENT 1\CV-PD14-DIM-CNTRL.dwg
Last Saved: 3/20/2025 1:44 PM Saved By: 03675
Plot Date: 3/21/2025 2:54 PM Plot By: 08354 Filename: N:\WRD\Drawings\AMENDMENT 1\CV-PD14-DIM-CNTRL.dwg

ACAD Rel: 25.0s (LMS Tech)
Filename: N:\WRD\Drawings\AMENDMENT 1\CV-PD14-PL-PROP.dwg
Last Saved: 3/20/2025 8:21 AM Saved By: 08354

Plot Date: 3/21/2025 2:57 PM Plot By: 08354 Filename: N:\WRD\Drawings\AMENDMENT 1\CV-PD14-PL-PROP.dwg

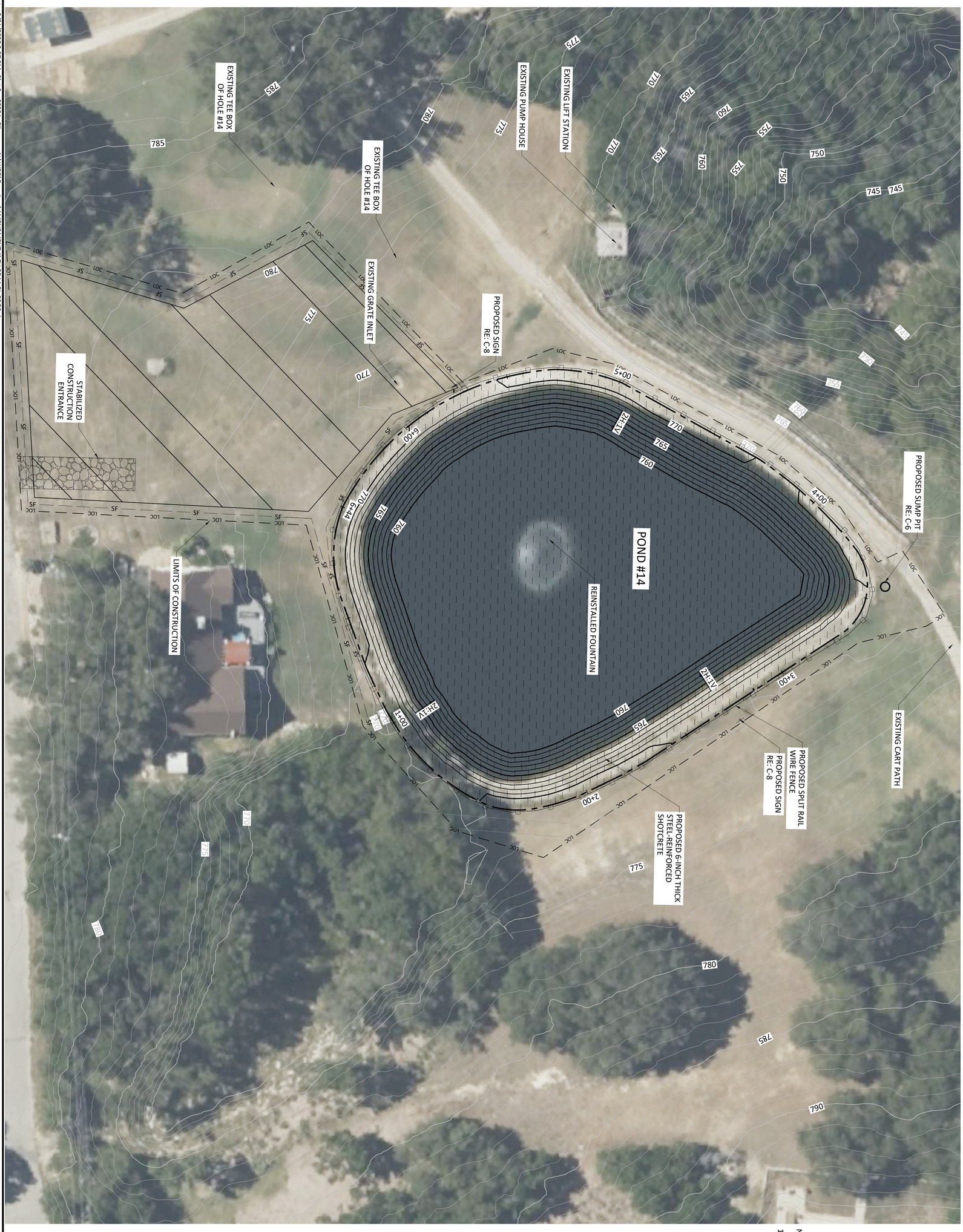

NOTES:

1. PROPOSED SIGNS MUST BE PLACED IN THE SAME LOCATION AS THE EXISTING SIGNS PRIOR TO REMOVAL.

0 20' 40'
SCALE IN FEET

NORTH

65% SUBMITTAL

Freese and Nichols, Inc.
Texas Registered Engineering Firm F-2144

NO.	ISSUE	BY	DATE

VERIFY SCALE 0 1 Bar is one inch on original drawing. If not one inch on this sheet, adjust scale.

FILE NAME

F&N JOB NO.	LGV23021
DATE	3/21/2025
DESIGNED	BET
DRAWN	SRL
CHECKED	JJG
APPROVED	HGO

CITY OF LAGO VISTA
EFLLUENT POND #14 LINER REPLACEMENT AND PRESSURIZED PIPELINE TO POND #2

CIVIL

POND #14 PROPOSED GRADING PLAN

FREESE AND NICHOLS
10431 Morado Circle, Suite 300
Austin, Texas 78759
Phone - (512) 617-3100
Web - www.freese.com

NOT FOR CONSTRUCTION

THIS DOCUMENT IS RELEASED FOR THE PURPOSE OF INTERIM REVIEW UNDER THE AUTHORITY OF: BRYCE EARL TODD P.E. TEXAS NO: 145856 ON DATE:03/21/2025 IT IS NOT TO BE USED FOR CONSTRUCTION, BIDDING OR PERMIT PURPOSES.

SHEET C-4

SEQ. 10 OF 31

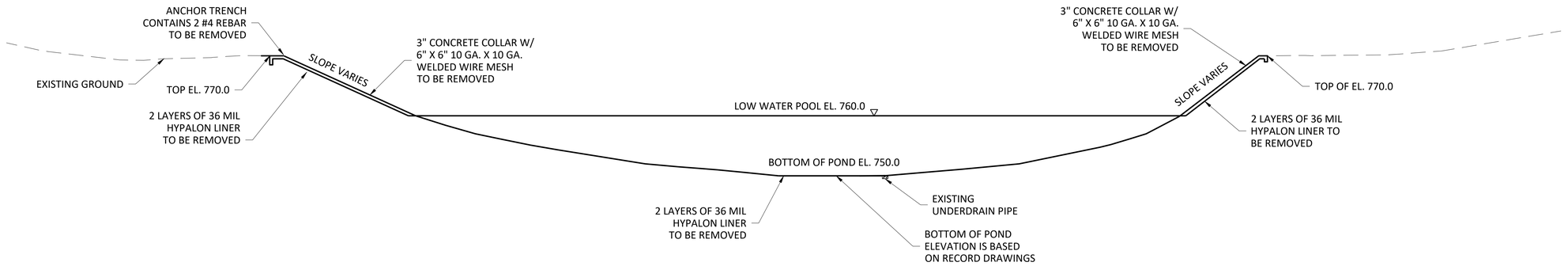

1 – EXISTING POND #14 TYPICAL SECTION

0 10' 20'
SCALE IN FEET
HORIZONTAL

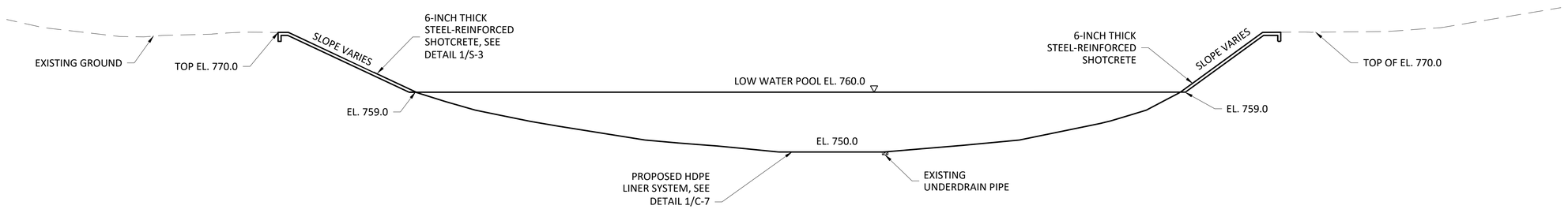

2 – PROPOSED POND #14 TYPICAL SECTION

0 10' 20'
SCALE IN FEET
HORIZONTAL

65% SUBMITTAL

Freese and Nichols, Inc.
Texas Registered Engineering Firm F-2144

NOT FOR CONSTRUCTION
THIS DOCUMENT IS RELEASED FOR THE PURPOSE OF INTERIM REVIEW UNDER THE AUTHORITY OF BRYCE E. TOOD, P.E. TEXAS NO: 145856 ON DATE 03/21/2025 IT IS NOT TO BE USED FOR CONSTRUCTION, BIDDING OR PERMIT PURPOSES.

FREESE NICHOLS
10431 Morado Circle, Suite 300
Austin, Texas 78759
Phone - (512) 617-3100
Web - www.freese.com

CITY OF LAGO VISTA
EFFLUENT POND #14 LINER REPLACEMENT AND PRESSURIZED PIPELINE TO POND #2
CIVIL
POND #14 TYPICAL SECTIONS

R&N JOB NO.	LGV23021
DATE	3/21/2025
DESIGNED	BET
DRAWN	SRL
CHECKED	JJG
APPROVED	HGO

NO.	ISSUE	BY	DATE

FILE NAME

VERIFY SCALE Bar is one inch on original drawing. If not one inch on this sheet, adjust scale.
0 1

SHEET C-5
SEQ. 11 OF 31

ACAD Rel: 25.0s (LMS Tech)
Filename: N:\WRD\Drawings\AMENDMENT 1\CV-PD14-TYP-SECT.dwg
Last Saved: 3/20/2025 8:27 AM Saved By: 08354
Plot Date: 3/21/2025 2:59 PM Plot By: 08354 Filename: N:\WRD\Drawings\AMENDMENT 1\CV-PD14-TYP-SECT.dwg

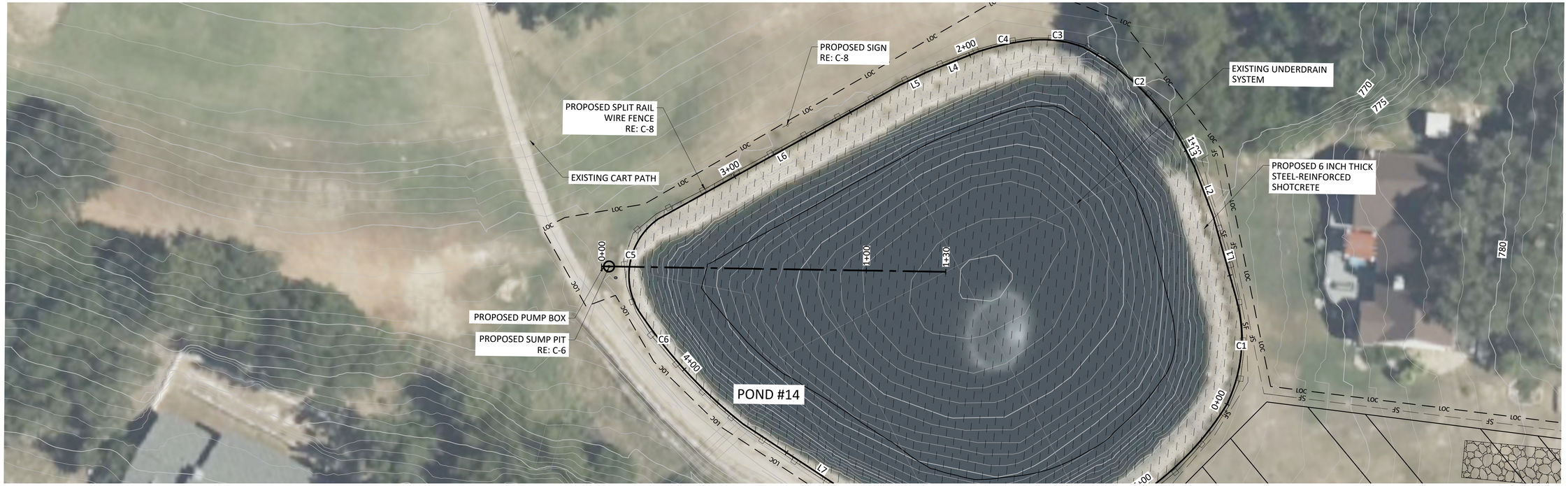

1 - POND #14 UNDERDRAIN PLAN

0 20' 40'
SCALE IN FEET

VICTOR - PLEASE NOTE, BASED ON THE CONVERSATION FROM 3/19, THIS PAGE WILL BE AMENDED TO SHOW A CONCRETE BOX THAT IS ADJACENT TO THE EXISTING OBSERVATION STRUCTURE. THE BOX WILL HOUSE A PUMP AND A VERTICAL SUCTION PIPE WILL BE PLACED IN THE EXISTING OBSERVATION STRUCTURE.

THE EXISTING OBSERVATION STRUCTURE IS AN APPROXIMATELY 20' TALL, 12" DIAMETER PVC SDR 21 PIPE.

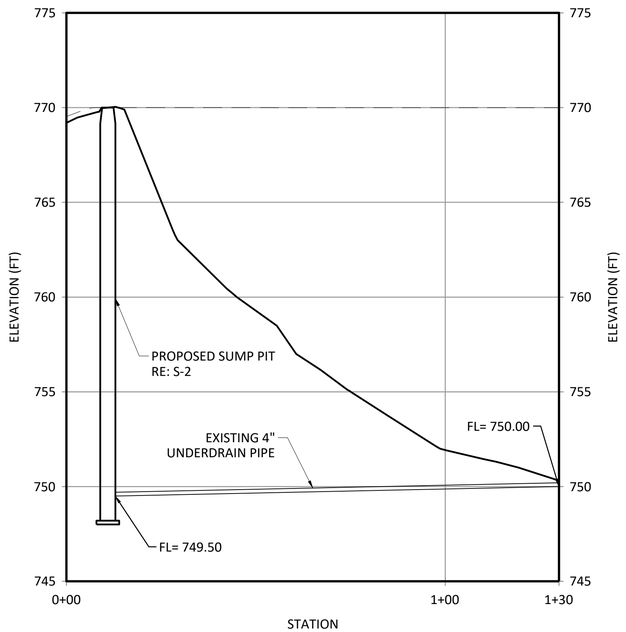

2 - POND #14 UNDERDRAIN PROFILE

0 5' 10'
SCALE IN FEET
VERTICAL

0 20' 40'
SCALE IN FEET
HORIZONTAL

Freese and Nichols, Inc.
Texas Registered Engineering Firm F-2144

NOT FOR CONSTRUCTION
THIS DOCUMENT IS RELEASED FOR THE PURPOSE OF INTERIM REVIEW UNDER THE AUTHORITY OF: BRYCE EARL TODD P.E. TEXAS NO: 145856 ON DATE: 03/21/2025 IT IS NOT TO BE USED FOR CONSTRUCTION, BIDDING OR PERMIT PURPOSES.

FREESE AND NICHOLS
10431 Morado Circle, Suite 300
Austin, Texas 78759
Phone - (512) 617-3100
Web - www.freese.com

CITY OF LAGO VISTA
EFLLUENT POND #14 LINER REPLACEMENT AND PRESSURIZED PIPELINE TO POND #2

CIVIL
POND #14 UNDERDRAIN PLAN AND PROFILE

F&N JOB NO.	LGV23021
DATE	3/21/2025
DESIGNED	BET
DRAWN	SRL
CHECKED	JJG
APPROVED	HGO

NO.	ISSUE	BY	DATE

FILE NAME

VERIFY SCALE 0 1
Bar is one inch on original drawing. If not one inch on this sheet, adjust scale.

SHEET C-6

SEQ. 12 OF 31

65% SUBMITTAL

ACAD Rel: 25.0s (LMS Tech)
Filename: N:\WRD\Drawings\AMENDMENT 1\CV-PD14-PLPR-UNDRN.dwg
Last Saved: 3/20/2025 8:28 AM Saved By: 08354

Plot Date: 3/21/2025 3:45 PM Plot By: 08354 Filename: N:\WRD\Drawings\AMENDMENT 1\CV-PD14-PLPR-UNDRN.dwg

NOTES:

1. THE CONTRACTOR RESPONSIBLE FOR INSTALLING THE LINER PROTECTION LAYER SHALL UTILIZE A SEPARATION MECHANISM (E.G., A RUB SHEET) BETWEEN THE LINER SYSTEM AND THE FORMWORK OR OTHER EQUIPMENT REQUIRED TO INSTALL THE LINER PROTECTION LAYER, IN ORDER TO AVOID DIRECT CONTACT BETWEEN THESE ITEMS WHICH MAY LEAD TO DEFECTS IN THE LINER SYSTEM.

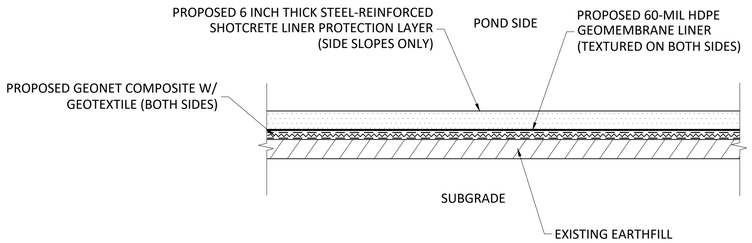

1 LINER SYSTEM DETAIL

0 1' 2' 4'

1/2"=1'-0"

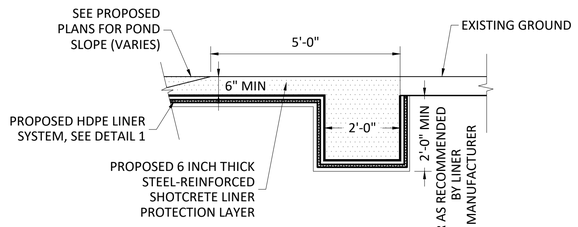

2 ANCHOR TRENCH DETAIL FOR PROPOSED POND LINER SYSTEM

0 1' 2' 4'

1/2"=1'-0"

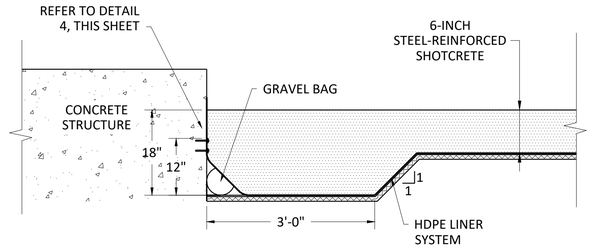

NOTES:

1. DETAIL IS AN ACCEPTABLE METHOD OF ATTACHING LINER TO CONCRETE. ATTACHMENT WITH AN EMBEDDED POLYETHYLENE CHANNEL AS PER MANUFACTURER'S RECOMMENDATIONS IS ACCEPTABLE. CONTRACTOR MAY SUBMIT AN ALTERNATE PLAN FOR APPROVAL.
2. NOTE APPLIES TO THE OUTLET HEADWALL OF POND #14. LINER SHALL BE CONTINUOUS UNDER ALL SLOPE PAVING.
3. SILICON SEALANT SHALL BE APPLIED TO SEAM BETWEEN THE TWO NEOPRENE GASKETS PRIOR TO PLACEMENT OF LINER AND BATTEN BAR. SILICON SEALANT SHALL BE APPLIED AROUND EACH BOLT AFTER INSTALLATION AND TIGHTENING. APPLY SEALANT ALONG TOP EDGE OF LINER.
4. PARTIALLY FILL GRAVEL BAGS TO FACILITATE TRANSITION OF LINER FROM HORIZONTAL TO VERTICAL. USE PEA GRAVEL. FORMER GROUT MAY ALSO BE USED.

3 ATTACHMENT OF LINER TO CONCRETE

0 6" 1' 2'

3/4"=1'-0

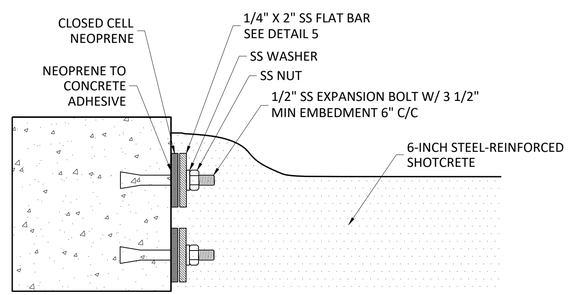

1 BOLT DETAIL

NOT TO SCALE

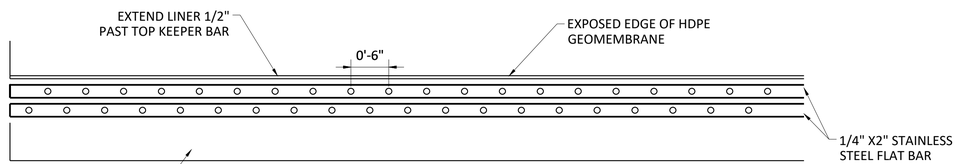

5 LINER/BATTEN ATTACHMENT ELEVATION

0 6" 1' 2'

1"=1'-0"

Freese and Nichols, Inc.
Texas Registered Engineering Firm F-2144

NOT FOR CONSTRUCTION

THIS DOCUMENT IS RELEASED FOR THE PURPOSE OF INTERIM REVIEW UNDER THE AUTHORITY OF BRENT E. TOOD, P.E. TEXAS NO. 145856 ON DATE 03/21/2025 IT IS NOT TO BE USED FOR CONSTRUCTION, BIDDING OR PERMIT PURPOSES.

FREESE NICHOLS
10431 Morado Circle, Suite 300
Austin, Texas 78759
Phone - (512) 617-3100
Web - www.freese.com

CITY OF LAGO VISTA
EFFLUENT POND #14 LINER REPLACEMENT AND PRESSURIZED PIPELINE TO POND #2
CIVIL
GEOSYNTHETIC POND LINER DETAILS

F&N JOB NO.	LGV23021
DATE	3/21/2025
DESIGNED	BET
DRAWN	SRL
CHECKED	JJG
APPROVED	HGO

NO.	ISSUE	BY	DATE	FILE NAME

VERIFY SCALE Bar is one inch on original drawing. If not one inch on this sheet, adjust scale.

0 1

SHEET C-7

SEQ. 13 OF 31

65% SUBMITTAL

ACAD Rel: 25.0s (LMS Tech)
Filename: N:\WRD\Drawings\AMENDMENT 1\CV-PD14- DET-LNR.dwg
Last Saved: 3/20/2025 8:38 AM Saved By: 08354

Plot Date: 3/21/2025 3:00 PM Plot By: 08354 Filename: N:\WRD\Drawings\AMENDMENT 1\CV-PD14- DET-LNR.dwg

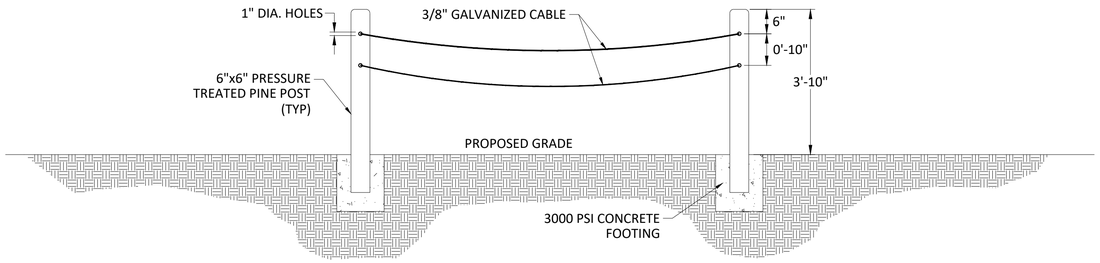

1 – SPLIT RAIL WIRE FENCE

NTS

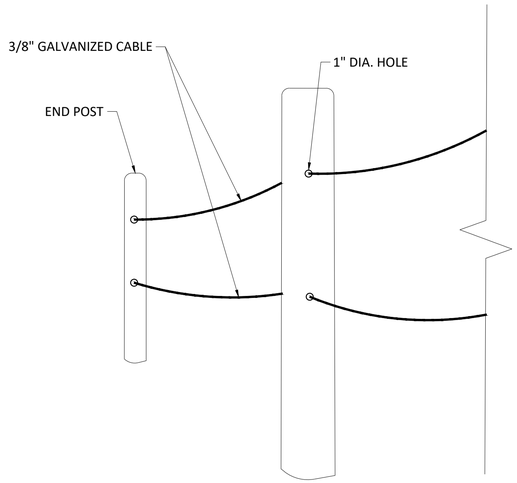

2 – ISOMETRIC VIEW

NTS

NOTES:
1. ALL WOOD FOR SPLIT RAIL WIRE FENCE SHALL BE PRESSURE TREATED PINE.
2. END POST SHALL BE TERMINAL POST.

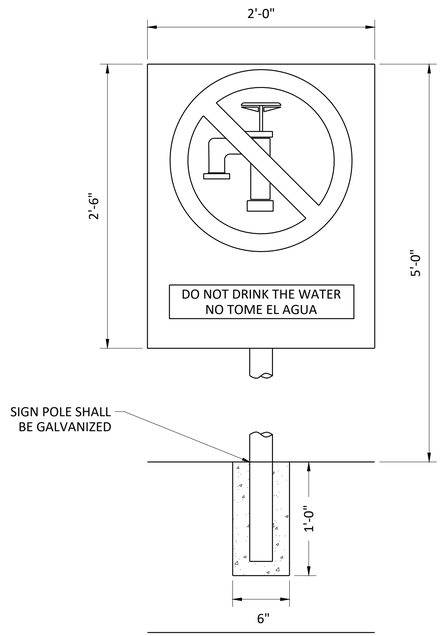

NOTE:
1. CONTRACTOR TO SUBMIT SHOP DRAWINGS CONTAINING THE FONT, SIZE, COLOR, AND SPACING OF THE MARKING SHOWN AS WELL AS THE CONNECTION DETAILS OF THE SIGN TO THE POLE.
2. LETTERING SHALL BE BLACK AND THE WARNING STRIKETHROUGH SHALL BE SAFETY RED.
3. CUSTOM SIGNS SHALL FOLLOW THE GUIDELINES FOR REGULATORY SIGNS IN THE STANDARD HIGHWAY SIGN DESIGNS FOR TEXAS MANUAL

3 – CUSTOM SIGN

0 4" 8" 1'
1-1/2"=1'-0"

65% SUBMITTAL

Freese and Nichols, Inc.
Texas Registered Engineering Firm F-2144

NOT FOR CONSTRUCTION
THIS DOCUMENT IS RELEASED FOR THE PURPOSE OF INTERIM REVIEW UNDER THE AUTHORITY OF BRENT E. TOOLE, P.E. TEXAS NO. 145856 ON DATE 03/21/2025 IT IS NOT TO BE USED FOR CONSTRUCTION, BIDDING OR PERMIT PURPOSES.

FREESE NICHOLS
10431 Morado Circle, Suite 300
Austin, Texas 78759
Phone - (512) 617-3100
Web - www.freese.com

CITY OF LAGO VISTA
EFFLUENT POND #14 LINER REPLACEMENT AND PRESSURIZED PIPELINE TO POND #2
CIVIL
POND #14 MISC. DETAILS

F&N JOB NO.	LGV23021
DATE	3/21/2025
DESIGNED	BET
DRAWN	SRL
CHECKED	JJG
APPROVED	HGO
FILE NAME	

NO.	ISSUE	BY	DATE

VERIFY SCALE Bar is one inch on original drawing. If not one inch on this sheet adjust scale.
0 1

SHEET C-8
SEQ. 14 OF 31

ACAD Rel:: 25.0s (LMS Tech)
Filename: N:\WRD\Drawings\AMENDMENT 1\CV-PD14- DET-MISC.dwg
Last Saved: 3/20/2025 8:39 AM Saved By: 08354
Plot Date: 3/21/2025 3:01 PM Plot By: 08354 Filename: N:\WRD\Drawings\AMENDMENT 1\CV-PD14- DET-MISC.dwg

NOTES:
1. ALL DISTURBED AREAS SHALL RECEIVE A MINIMUM 6" THICK LAYER OF TOPSOIL AND A TOP LAYER OF BERMUDA GRASS SOD. EXCLUSIONS INCLUDE AREAS TO RECEIVE LINER PROTECTION, THE BOTTOM OF POND #2, AND THE EMBANKMENT CREST.

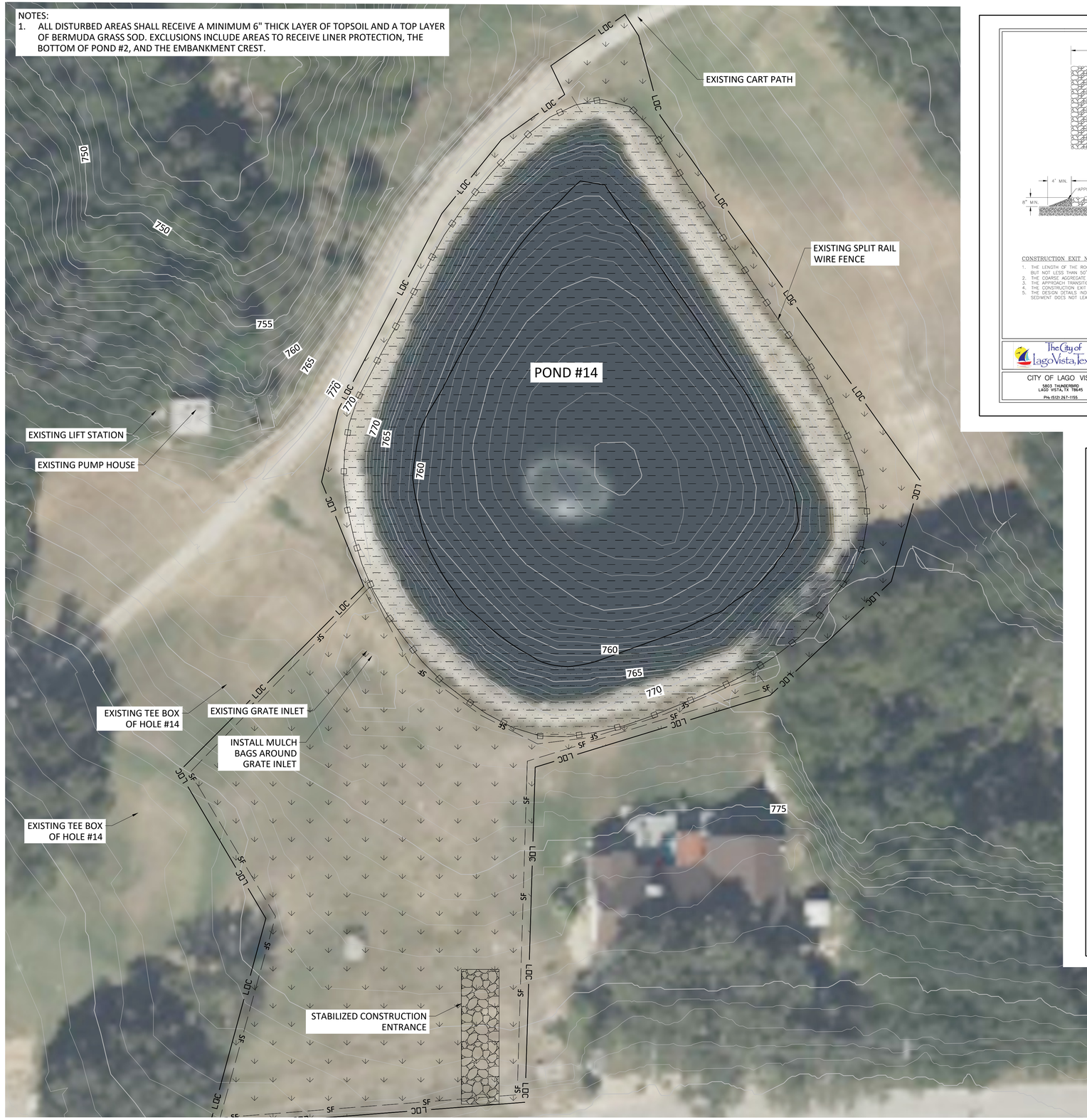

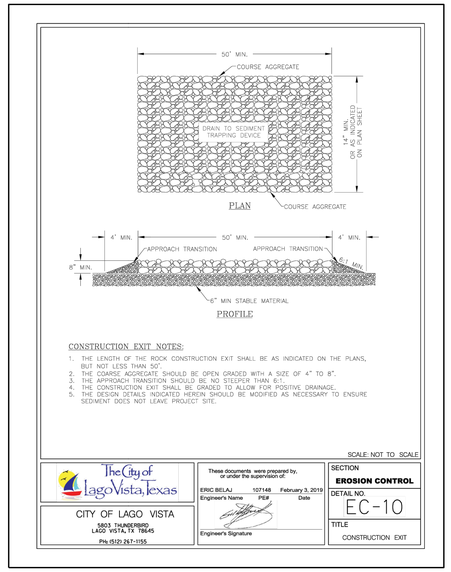

CONSTRUCTION EXIT NOTES:
1. THE LENGTH OF THE ROCK CONSTRUCTION EXIT SHALL BE AS INDICATED ON THE PLANS, BUT NOT LESS THAN 50'.
2. THE COARSE AGGREGATE SHOULD BE OPEN GRADED WITH A SIZE OF 4" TO 8".
3. THE APPROACH TRANSITION SHOULD BE NO STEEPER THAN 6:1.
4. THE CONSTRUCTION EXIT SHALL BE GRADED TO ALLOW FOR POSITIVE DRAINAGE.
5. THE DESIGN DETAILS INDICATED HEREIN SHOULD BE MODIFIED AS NECESSARY TO ENSURE SEDIMENT DOES NOT LEAVE PROJECT SITE.

SCALE: NOT TO SCALE

The City of LagoVista, Texas

CITY OF LAGO VISTA
5803 THUNDERBIRD
LAGO VISTA, TX 78645
Ph: (512) 267-1155

These documents were prepared by, or under the supervision of:
ERIC BELAJ 107148 February 3, 2019
Engineer's Name PE# Date
Engineer's Signature

SECTION: EROSION CONTROL
DETAIL NO.: EC-10
TITLE: CONSTRUCTION EXIT

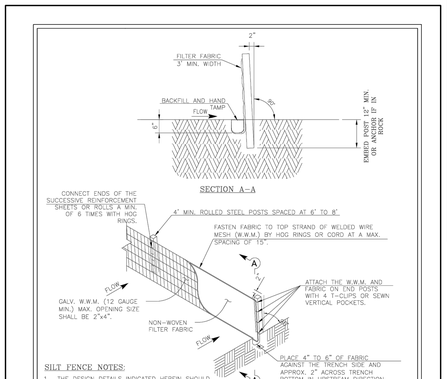

SILT FENCE NOTES:
1. THE DESIGN DETAILS INDICATED HEREIN SHOULD BE MODIFIED AS NECESSARY TO ENSURE SEDIMENT DOES NOT LEAVE THE PROJECT SITE.

SILT FENCE USAGE GUIDELINES
A SILT FENCE MAY BE CONSTRUCTED NEAR THE DOWNSTREAM PERIMETER OF A DISTURBED AREA ALONG A CONTOUR TO INTERCEPT SEDIMENT FROM OVERLAND RUNOFF.

SCALE: NOT TO SCALE

The City of LagoVista, Texas

CITY OF LAGO VISTA
5803 THUNDERBIRD
LAGO VISTA, TX 78645
Ph: (512) 267-1155

These documents were prepared by, or under the supervision of:
ERIC BELAJ 107148 February 3, 2019
Engineer's Name PE# Date
Engineer's Signature

SECTION: EROSION CONTROL
DETAIL NO.: EC-2
TITLE: SILT FENCE

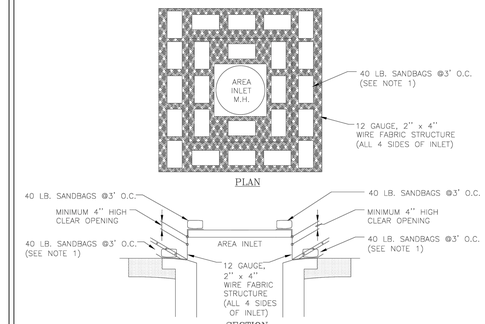

AREA/GRATE INLET PROTECTION:
1. WHERE MINIMUM CLEARANCES CAUSE TRAFFIC TO DRIVE IN THE GUTTER, THE CONTRACTOR MAY SUBSTITUTE A 1"x4" BOARD SECURED WITH CONCRETE NAILS 3' O.C. NAILED INTO THE GUTTER IN LIEU OF SANDBAGS TO HOLD THE FILTER DIKE IN PLACE. UPON REMOVAL, CLEAN ANY DIRT/DEBRIS FROM NAILING LOCATIONS, APPLY CHEMICAL SANDING AGENT AND APPLY NON-SHRINK GROUT FLUSH WITH SURFACE OF GUTTER.
2. A SECTION OF FILTER FABRIC SHALL BE REMOVED AS SHOWN ON THIS DETAIL OR AS DIRECTED BY THE ENGINEER OR DESIGNATED REPRESENTATIVE. FABRIC MUST BE SECURED TO WIRE BACKING WITH CLIPS OR HOG RINGS AT THIS LOCATION.
3. DAILY INSPECTION SHALL BE MADE BY THE CONTRACTOR AND SILT ACCUMULATION MUST BE REMOVED WHEN DEPTH REACHES 2".
4. CONTRACTOR SHALL MONITOR THE PERFORMANCE OF INLET PROTECTION DURING EACH RAINFALL EVENT AND IMMEDIATELY REMOVE THE INLET PROTECTIONS IF THE STORM-WATER BEGINS TO OVERTOP THE CURB.
5. INLET PROTECTIONS SHALL BE REMOVED AS SOON AS THE SOURCE OF SEDIMENT IS STABILIZED.

SCALE: NOT TO SCALE

The City of LagoVista, Texas

CITY OF LAGO VISTA
5803 THUNDERBIRD
LAGO VISTA, TX 78645
Ph: (512) 267-1155

These documents were prepared by, or under the supervision of:
ERIC BELAJ 107148 February 3, 2019
Engineer's Name PE# Date
Engineer's Signature

SECTION: EROSION CONTROL
DETAIL NO.: EC-8
TITLE: AREA INLET PROTECTION

NORTH

0 20' 40'
SCALE IN FEET

65% SUBMITTAL

Freese and Nichols, Inc.
Texas Registered Engineering Firm F-2144

NOT FOR CONSTRUCTION
THIS DOCUMENT IS RELEASED FOR THE PURPOSE OF INTERIM REVIEW UNDER THE AUTHORITY OF ERIC BELAJ, P.E. 107148 TEXAS. ON DATE 03/21/2025 IT IS NOT TO BE USED FOR CONSTRUCTION, BIDDING OR PERMIT PURPOSES.

FREESE NICHOLS
10431 Morado Circle, Suite 300
Austin, Texas 78759
Phone - (512) 617-3100
Web - www.freese.com

CITY OF LAGO VISTA
EFFLUENT POND #14 LINER REPLACEMENT AND PRESSURIZED PIPELINE TO POND #2
CIVIL
POND #14 SWPPP

NO.	ISSUE	BY	DATE	FILE NAME

F&N JOB NO. LGV23021
DATE 3/21/2025
DESIGNED BET
DRAWN SRL
CHECKED JJG
APPROVED HGO

VERIFY SCALE Bar is one inch on original drawing. If not one inch on this sheet, adjust scale.
0 1"

SHEET C-9
SEQ. 15 OF 31

ACAD Rel.: 25.0s (LMS Tech)
Filename: N:\WRD\Drawings\AMENDMENT 1\CV-PD14-SWPPP.dwg
Last Saved: 3/20/2025 8:40 AM Saved By: 08354

Plot Date: 3/21/2025 3:04 PM Plot By: 08354 Filename: N:\WRD\Drawings\AMENDMENT 1\CV-PD14-SWPPP.dwg

ACAD Rel: 25.0s (LMS Tech)
Filename: N:\WRD\Drawings\AMENDMENT 1\CV-PD17- EX-COND.dwg
Last Saved: 3/21/2025 4:18 PM Saved By: 08354

Plot Date: 3/21/2025 4:20 PM Plot By: 08354 Filename: N:\WRD\Drawings\AMENDMENT 1\CV-PD17- EX-COND.dwg

SCALE IN FEET 0 40' 80'

NORTH

65% SUBMITTAL

NO.	ISSUE	BY	DATE

VERIFY SCALE 0 1 Bar is one inch on original drawing. If not one inch on this sheet, adjust scale.

FILE NAME

F&N JOB NO.	LGV23021
DATE	3/21/2025
DESIGNED	BET
DRAWN	SRL
CHECKED	JJG
APPROVED	HGO

CITY OF LAGO VISTA
EFLLUENT POND #14 LINER REPLACEMENT AND PRESSURIZED PIPELINE TO POND #2

CIVIL

POND #17 EXISTING CONDITIONS

FREESE AND NICHOLS
10431 Morado Circle, Suite 300
Austin, Texas 78759
Phone - (512) 617-3100
Web - www.freese.com

Freese and Nichols, Inc.
Texas Registered Engineering Firm F-2144

NOT FOR CONSTRUCTION

THIS DOCUMENT IS RELEASED FOR THE PURPOSE OF INTERIM REVIEW UNDER THE AUTHORITY OF: BRYCE EARL TODD P.E. TEXAS NO: 145856 ON DATE:03/21/2025 IT IS NOT TO BE USED FOR CONSTRUCTION, BIDDING OR PERMIT PURPOSES.

SHEET C-10

SEQ. 16 OF 31

NORTH

0 40' 80'

SCALE IN FEET

65% SUBMITTAL

Freese and Nichols, Inc.
Texas Registered Engineering Firm F-2144

NOT FOR CONSTRUCTION

THIS DOCUMENT IS RELEASED FOR THE PURPOSE OF INTERIM REVIEW UNDER THE AUTHORITY OF BRYCE E. BENDER, P.E. TEXAS NO: 145856 ON DATE: 03/21/2025 IT IS NOT TO BE USED FOR CONSTRUCTION, BIDDING OR PERMIT PURPOSES.

FREESE NICHOLS
10431 Morado Circle, Suite 300
Austin, Texas 78759
Phone - (512) 617-3100
Web - www.freese.com

CITY OF LAGO VISTA
EFFLUENT POND #14 LINER REPLACEMENT AND PRESSURIZED PIPELINE TO POND #2
CIVIL

POND #17 UNDERDRAIN OUTLET PLAN

NO.	ISSUE	BY	DATE

F&N JOB NO. LGV23021
DATE 3/21/2025
DESIGNED BET
DRAWN SRL
CHECKED JIG
APPROVED HGO
FILE NAME

VERIFY SCALE Bar is one inch on original drawing. If not one inch on this sheet, adjust scale.
0 1

SHEET C-11
SEQ. 17 OF 31

ACAD Rel: 25.0s (LMS Tech)
Filename: N:\WRD\Drawings\AMENDMENT 1\CV-PD17-PL-UNDRN.dwg
Last Saved: 3/20/2025 8:42 AM Saved By: 08354

Plot Date: 3/21/2025 3:09 PM Plot By: 08354 Filename: N:\WRD\Drawings\AMENDMENT 1\CV-PD17-PL-UNDRN.dwg

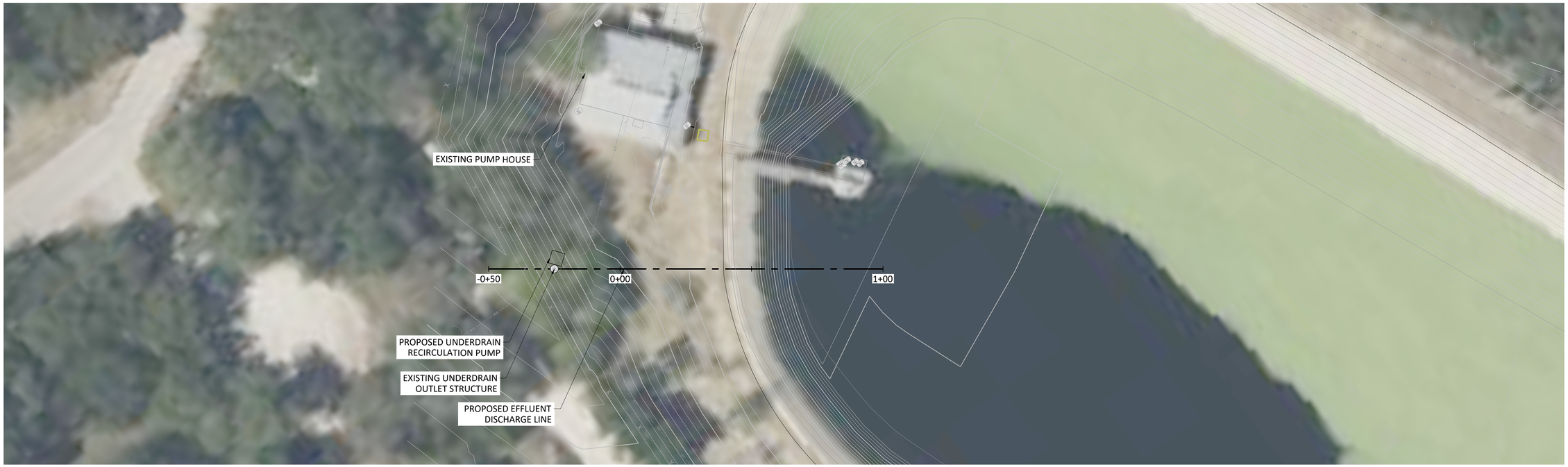

NORTH

1 POND #17 UNDERDRAIN PLAN

0 20' 40'
SCALE IN FEET
HORIZONTAL

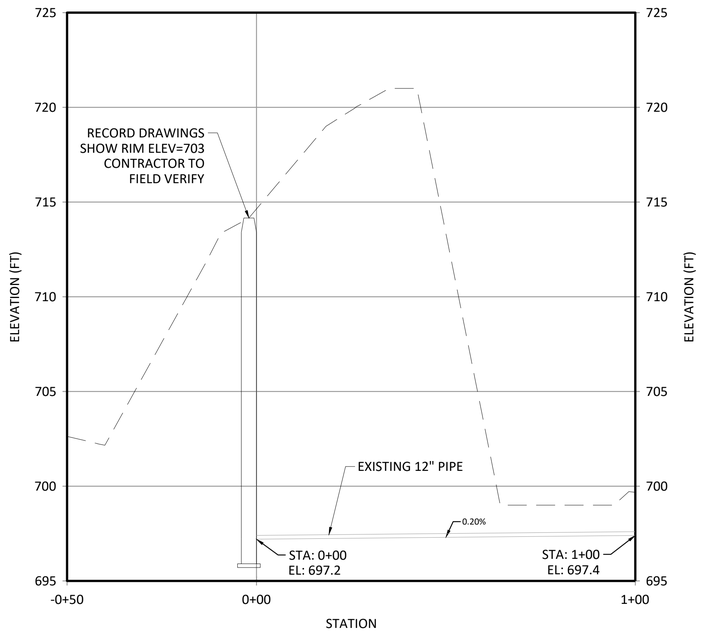

2 POND #17 UNDERDRAIN PROFILE

0 5' 10'
SCALE IN FEET
VERTICAL

0 20' 40'
SCALE IN FEET
HORIZONTAL

Freese and Nichols, Inc.
Texas Registered Engineering Firm F-2144

NOT FOR CONSTRUCTION
THIS DOCUMENT IS RELEASED FOR THE PURPOSE OF INTERIM REVIEW UNDER THE AUTHORITY OF: BRYCE EARL TODD P.E. TEXAS NO: 145856 ON DATE: 03/21/2025 IT IS NOT TO BE USED FOR CONSTRUCTION, BIDDING OR PERMIT PURPOSES.

FREESE AND NICHOLS
10431 Morado Circle, Suite 300
Austin, Texas 78759
Phone - (512) 617-3100
Web - www.freese.com

CITY OF LAGO VISTA
EFLLUENT POND #14 LINER REPLACEMENT AND PRESSURIZED PIPELINE TO POND #2

CIVIL

POND #17 UNDERDRAIN OUTLET PROFILE AND DETAILS

F&N JOB NO.	LGV23021
DATE	3/21/2025
DESIGNED	BET
DRAWN	SRL
CHECKED	JJG
APPROVED	HGO

NO.	ISSUE	BY	DATE

FILE NAME

VERIFY SCALE 0 1
Bar is one inch on original drawing. If not one inch on this sheet, adjust scale.

SHEET C-12

SEQ. 18 OF 31

65% SUBMITTAL

ACAD Rel: 25.0s (LMS Tech)
Filename: N:\WRD\Drawings\AMENDMENT 1\CV-PD17-PR-DET-UD.dwg
Last Saved: 3/20/2025 8:43 AM Saved By: 08354

Plot Date: 3/21/2025 3:11 PM Plot By: 08354 Filename: N:\WRD\Drawings\AMENDMENT 1\CV-PD17-PR-DET-UD.dwg

NOTES:
1. CONSTRUCTION OF POND #2 STARTED ON 3/31/2025. IT IS ANTICIPATED THAT POND #2 WILL COMPLETE AT THE START OF CONSTRUCTION FOR THIS SET OF SHEETS

65% SUBMITTAL

Freese and Nichols, Inc.
Texas Registered Engineering Firm F-2144

NOT FOR CONSTRUCTION
THIS DOCUMENT IS RELEASED FOR THE PURPOSE OF INTERIM REVIEW UNDER THE AUTHORITY OF BRENT E. THOMAS, P.E. TEXAS NO. 145856 ON DATE 03/21/2025 IT IS NOT TO BE USED FOR CONSTRUCTION, BIDDING OR PERMIT PURPOSES.

FREESE NICHOLS
10431 Morado Circle, Suite 300
Austin, Texas 78759
Phone - (512) 617-3100
Web - www.freese.com

CITY OF LAGO VISTA
EFFLUENT POND #14 LINER REPLACEMENT AND PRESSURIZED PIPELINE TO POND #2
CIVIL
POND #2 EXISTING CONDITIONS

F&N JOB NO.	LGV23021
DATE	3/21/2025
DESIGNED	BET
DRAWN	SRL
CHECKED	JJG
APPROVED	HGO

NO.	ISSUE	BY	DATE

FILE NAME

VERIFY SCALE Bar is one inch on original drawing. If not one inch on this sheet, adjust scale.
0 1"

SHEET C-13
SEQ. 19 OF 31

ACAD Rel: 25.0s (LMS Tech)
Filename: N:\WRD\Drawings\AMENDMENT 1\CV-PD2-EX-COND.dwg
Last Saved: 3/20/2025 8:44 AM Saved By: 08354

Plot Date: 3/21/2025 3:13 PM Plot By: 08354 Filename: N:\WRD\Drawings\AMENDMENT 1\CV-PD2-EX-COND.dwg

NOTES:
1. CONSTRUCTION OF POND #2 STARTED ON 3/31/2025. IT IS ANTICIPATED THAT POND #2 WILL BE COMPLETE AT THE START OF CONSTRUCTION FOR THIS SET OF SHEETS.

NORTH

0 20' 40'
SCALE IN FEET

65% SUBMITTAL

Freese and Nichols, Inc.
Texas Registered Engineering Firm F-2144

NOT FOR CONSTRUCTION
THIS DOCUMENT IS RELEASED FOR THE PURPOSE OF INTERIM REVIEW UNDER THE AUTHORITY OF: BRYCE EARL TODD P.E. TEXAS NO: 145856 ON DATE: 03/21/2025 IT IS NOT TO BE USED FOR CONSTRUCTION, BIDDING OR PERMIT PURPOSES.

FREESE AND NICHOLS
10431 Morado Circle, Suite 300
Austin, Texas 78759
Phone - (512) 617-3100
Web - www.freese.com

CITY OF LAGO VISTA
EFLLUENT POND #14 LINER REPLACEMENT AND PRESSURIZED PIPELINE TO POND #2
CIVIL
POND #2 RECIRCULATION SYSTEM PLAN

NO.	ISSUE	BY	DATE

F&N JOB NO. LGV23021
DATE 3/21/2025
DESIGNED BET
DRAWN SRL
CHECKED JJG
APPROVED HGO
FILE NAME

VERIFY SCALE 0 1
Bar is one inch on original drawing. If not one inch on this sheet, adjust scale.

SHEET C-14
SEQ. 20 OF 31

ACAD Rel: 25.0s (LMS Tech)
Filename: N:\WRD\Drawings\AMENDMENT 1\CV-PD2-PL-CIRC-SYST.dwg
Last Saved: 3/20/2025 8:45 AM Saved By: 08354

Plot Date: 3/21/2025 3:16 PM Plot By: 08354 Filename: N:\WRD\Drawings\AMENDMENT 1\CV-PD2-PL-CIRC-SYST.dwg

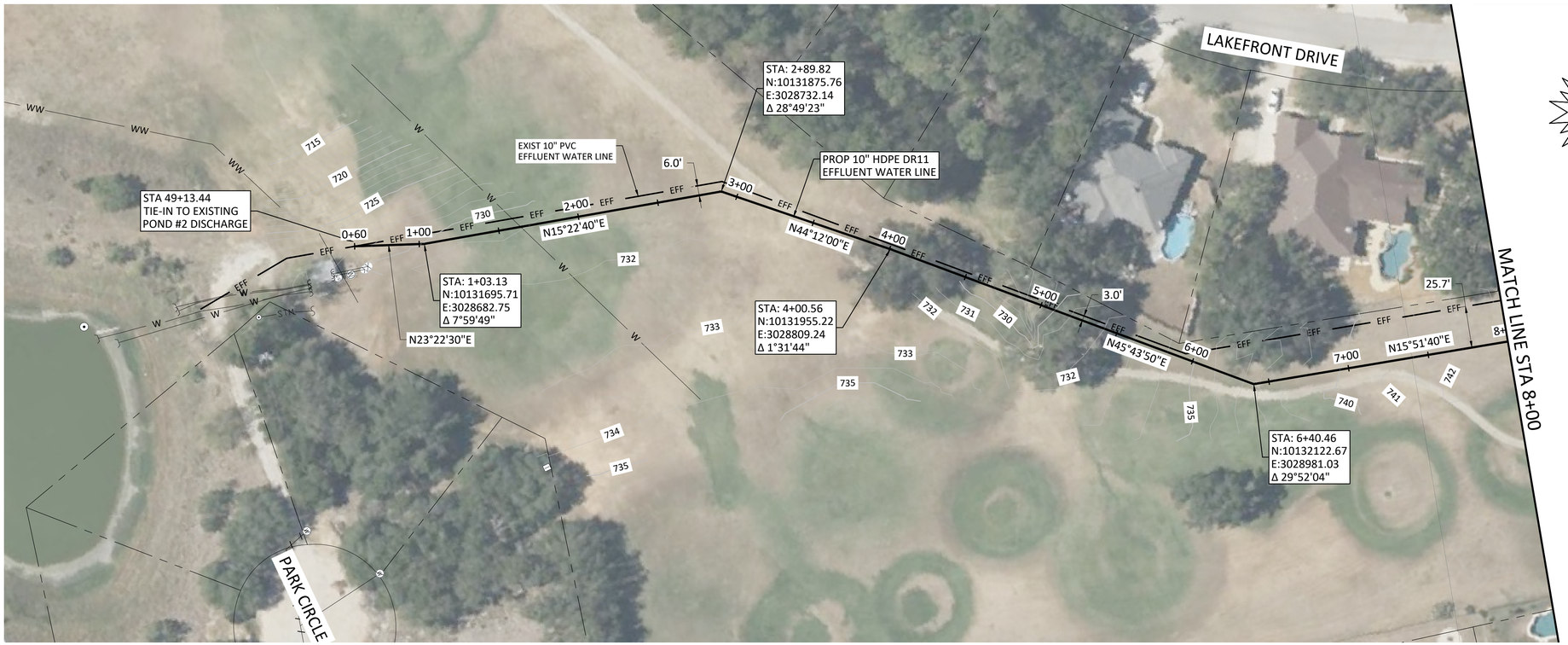

CAUTION!!!
EXISTING UNDERGROUND
UTILITIES IN THE AREA.
CALL TEXAS 811
48 HOURS PRIOR
TO CONSTRUCTION

NOTES:

1. CONTRACTOR SHALL VERIFY LOCATION AND DEPTH OF ALL UTILITIES PRIOR TO BEGINNING OF CONSTRUCTION.

NORTH

0 40 80
SCALE IN FEET

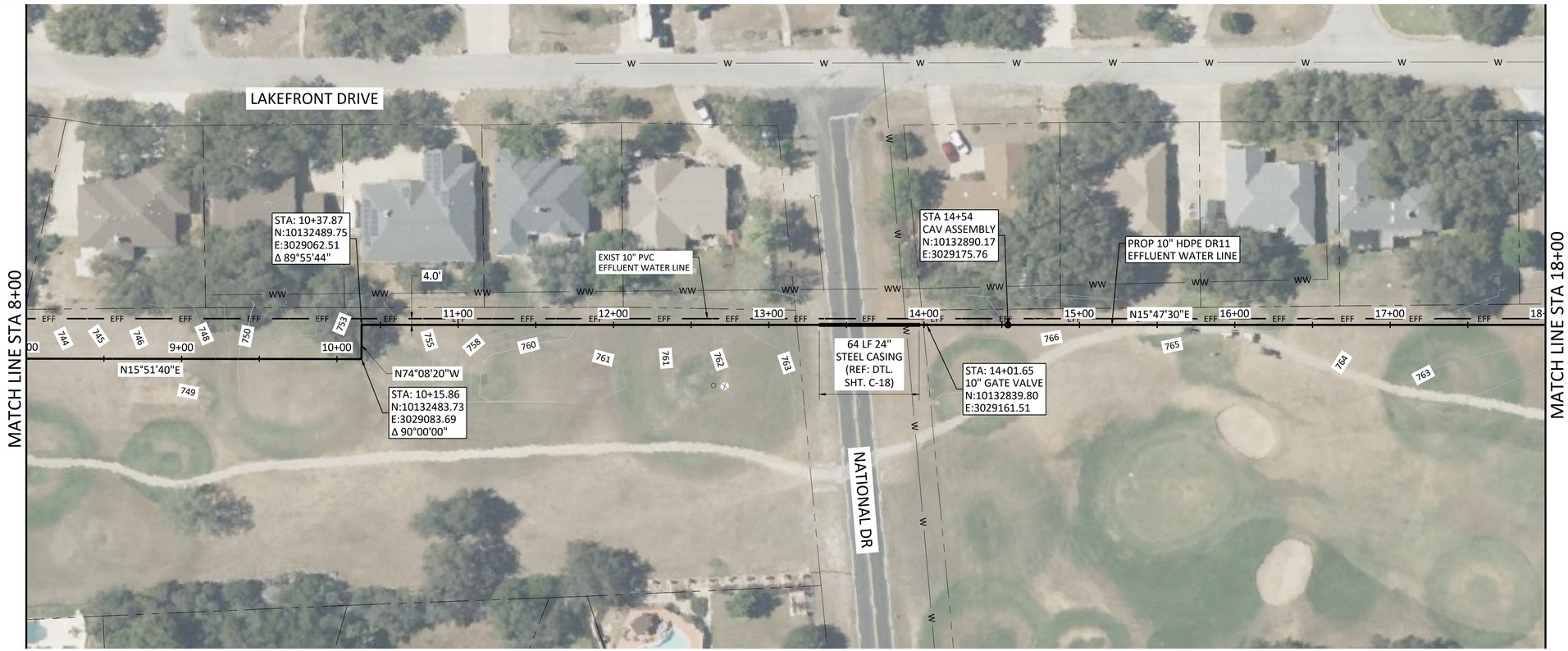

NORTH

0 40 80
SCALE IN FEET

65% SUBMITTAL

Freese and Nichols, Inc.
Texas Registered Engineering Firm F-2144

NOT FOR CONSTRUCTION
THIS DOCUMENT IS RELEASED FOR THE PURPOSE OF INTERIM REVIEW UNDER THE AUTHORITY OF AMBER L. GOINES, P.E. TEXAS NO. 103447 ON DATE 03/21/2025 IT IS NOT TO BE USED FOR CONSTRUCTION, BIDDING OR PERMIT PURPOSES.

FREESE NICHOLS
10431 Morado Circle, Suite 300
Austin, Texas 78759
Phone - (512) 617-3100
Web - www.freese.com

CITY OF LAGO VISTA
EFFLUENT POND #14 LINER REPLACEMENT AND
PRESSURIZED PIPELINE TO POND #2
CIVIL

STA 00+60 TO STA 18+00

F&N JOB NO.	LGV23021
DATE	3/21/2025
DESIGNED	BET
DRAWN	SRL
CHECKED	JJG
APPROVED	HGO

NO.	ISSUE	BY	DATE	FILE NAME

VERIFY SCALE Bar is one inch on original drawing. If not one inch on this sheet, adjust scale.
0 1

SHEET
C-15
SEQ.
21 OF 31

ACAD Rel: 25.0s (LMS Tech)
Filename: N:\WTU\Drawings\CV-WAT-PL-WTRL01.dwg
Last Saved: 3/21/2025 1:03 PM Saved By: 02568

Plot Date: 3/21/2025 1:04 PM Plot By: 02568 Filename: N:\WTU\Drawings\CV-WAT-PL-WTRL01.dwg

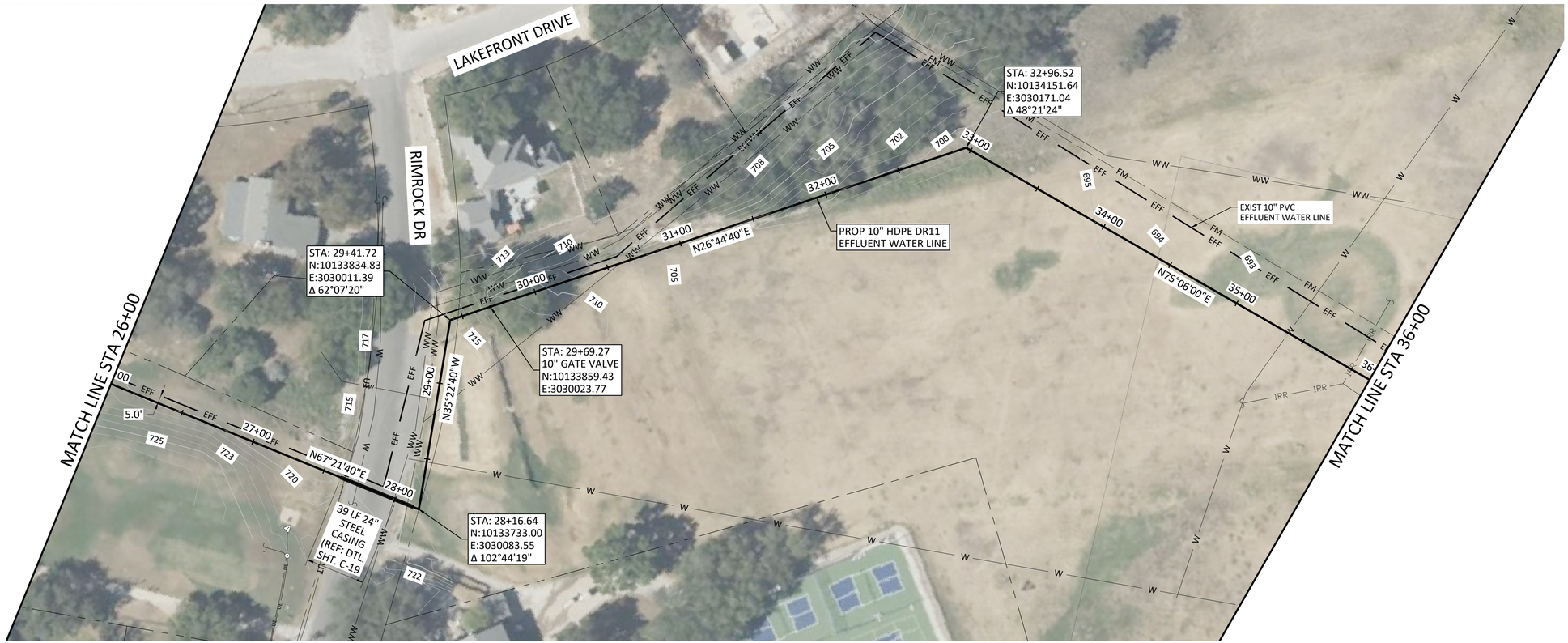

CAUTION!!!
EXISTING UNDERGROUND UTILITIES IN THE AREA.
CALL TEXAS 811
48 HOURS PRIOR
TO CONSTRUCTION

NOTES:

1. CONTRACTOR SHALL VERIFY LOCATION AND DEPTH OF ALL UTILITIES PRIOR TO BEGINNING OF CONSTRUCTION.

NORTH
0 40 80
SCALE IN FEET

65% SUBMITTAL

Freese and Nichols, Inc.
Texas Registered Engineering Firm F-2144

NOT FOR CONSTRUCTION
THIS DOCUMENT IS RELEASED FOR THE PURPOSE OF INTERIM REVIEW UNDER THE AUTHORITY OF MARK SCHLEIF, P.E. TEXAS NO: 103447 ON DATE: 03/21/2025 IT IS NOT TO BE USED FOR CONSTRUCTION, BIDDING OR PERMIT PURPOSES.

FREESE NICHOLS
10431 Morado Circle, Suite 300
Austin, Texas 78759
Phone - (512) 617-3100
Web - www.freese.com

CITY OF LAGO VISTA
EFFLUENT POND #14 LINER REPLACEMENT AND
PRESSURIZED PIPELINE TO POND #2
CIVIL

STA 18+00 TO STA 36+00

F&N JOB NO. LGV23021
DATE 3/21/2025
DESIGNED BET
DRAWN SRL
CHECKED JJG
APPROVED HGO

NO.	ISSUE	BY	DATE
1			

FILE NAME

VERIFY SCALE Bar is one inch on original drawing. If not one inch on this sheet, adjust scale.
0 1"

SHEET C-16
SEQ. 22 OF 31

ACAD Rel: 25.0s (LMS Tech)
Filename: N:\WTU\Drawings\CV-WAT-PL-WTRL01.dwg
Last Saved: 3/21/2025 1:03 PM Saved By: 02568

Plot Date: 3/21/2025 1:04 PM Plot By: 02568 Filename: N:\WTU\Drawings\CV-WAT-PL-WTRL01.dwg

CAUTION!!!
EXISTING UNDERGROUND UTILITIES IN THE AREA.
CALL TEXAS 811
48 HOURS PRIOR TO CONSTRUCTION

NOTES:

1. CONTRACTOR SHALL VERIFY LOCATION AND DEPTH OF ALL UTILITIES PRIOR TO BEGINNING OF CONSTRUCTION.

NORTH

0 40 80
SCALE IN FEET

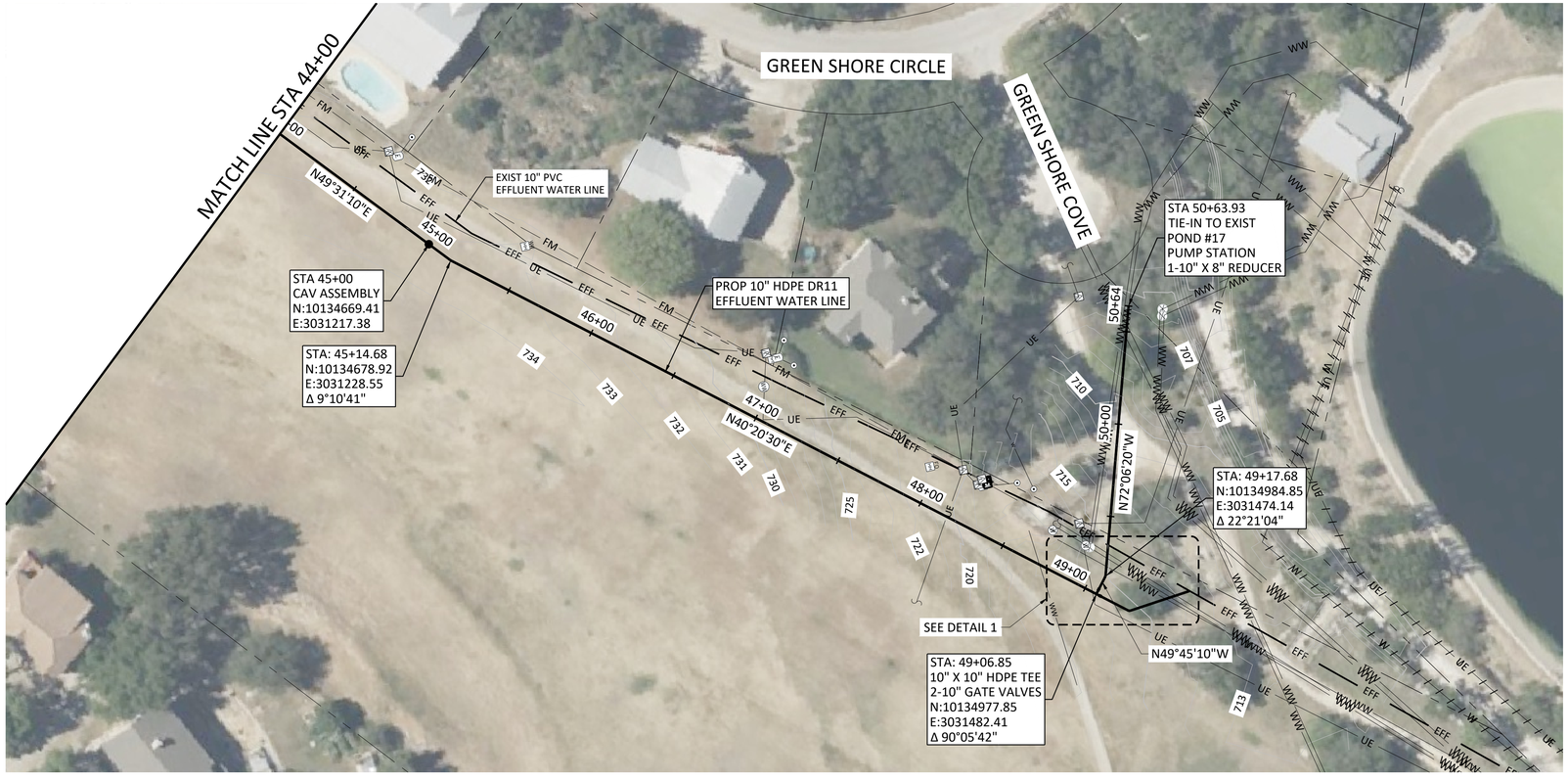

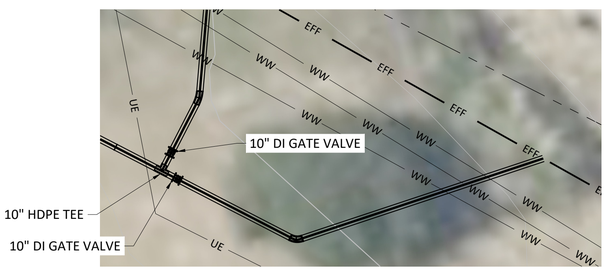

1 DETAIL
1"=10'

NORTH

0 40 80
SCALE IN FEET

65% SUBMITTAL

Freese and Nichols, Inc.
Texas Registered Engineering Firm F-2144

NOT FOR CONSTRUCTION
THIS DOCUMENT IS RELEASED FOR THE PURPOSE OF INTERIM REVIEW UNDER THE AUTHORITY OF: ANNE C. HOSKINS P.E. TEXAS NO: 103447 ON DATE: 03/21/2025 IT IS NOT TO BE USED FOR CONSTRUCTION, BIDDING OR PERMIT PURPOSES.

FREESE AND NICHOLS
10431 Morado Circle, Suite 300
Austin, Texas 78759
Phone - (512) 617-3100
Web - www.freese.com

CITY OF LAGO VISTA
EFLLUENT POND #14 LINER REPLACEMENT AND PRESSURIZED PIPELINE TO POND #2

CIVIL

STA 36+00 TO STA 50+64

NO.	ISSUE	BY	DATE

F&N JOB NO. LGV23021
DATE 3/21/2025
DESIGNED BET
DRAWN SRL
CHECKED JJG
APPROVED HGO
FILE NAME

VERIFY SCALE 0 1
Bar is one inch on original drawing. If not one inch on this sheet, adjust scale.

SHEET C-17
SEQ. 23 OF 31

ACAD Rel: 25.0s (LMS Tech)
Filename: N:\WTU\Drawings\CV-WAT-PL-WTRL01.dwg
Last Saved: 3/21/2025 1:03 PM Saved By: 02568

Plot Date: 3/21/2025 1:04 PM Plot By: 02568 Filename: N:\WTU\Drawings\CV-WAT-PL-WTRL01.dwg

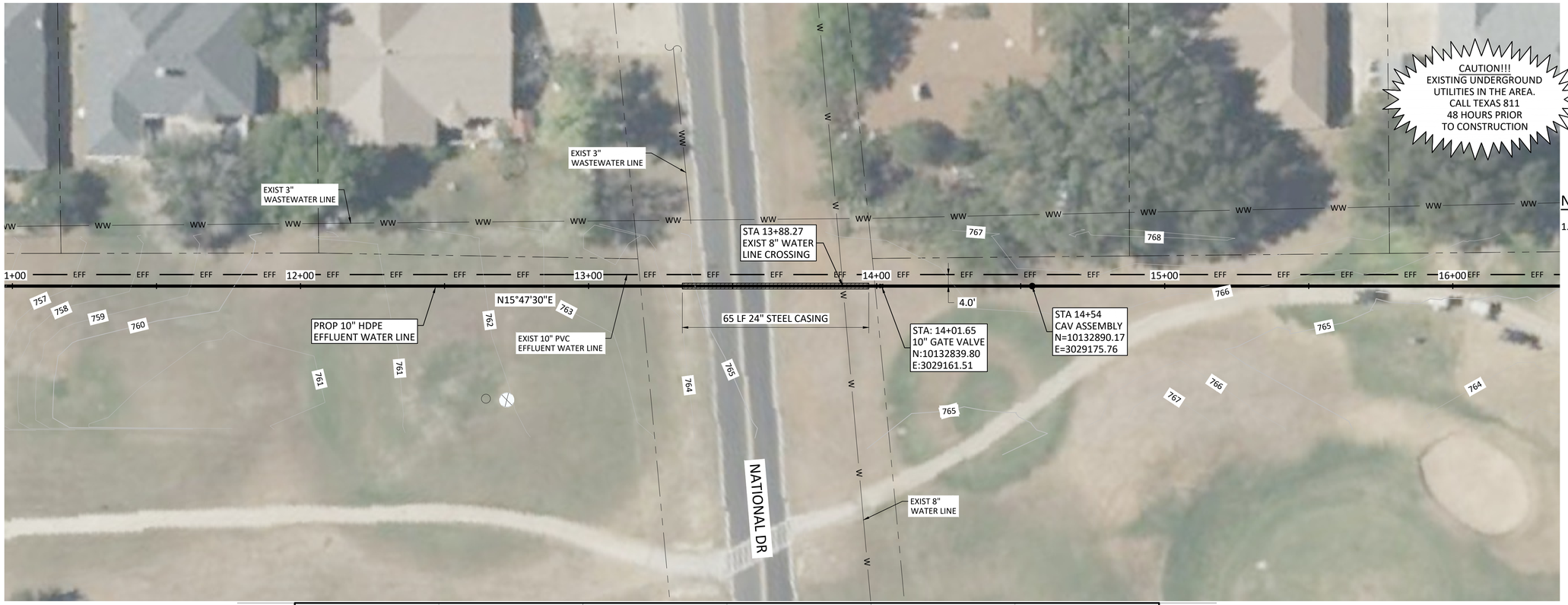

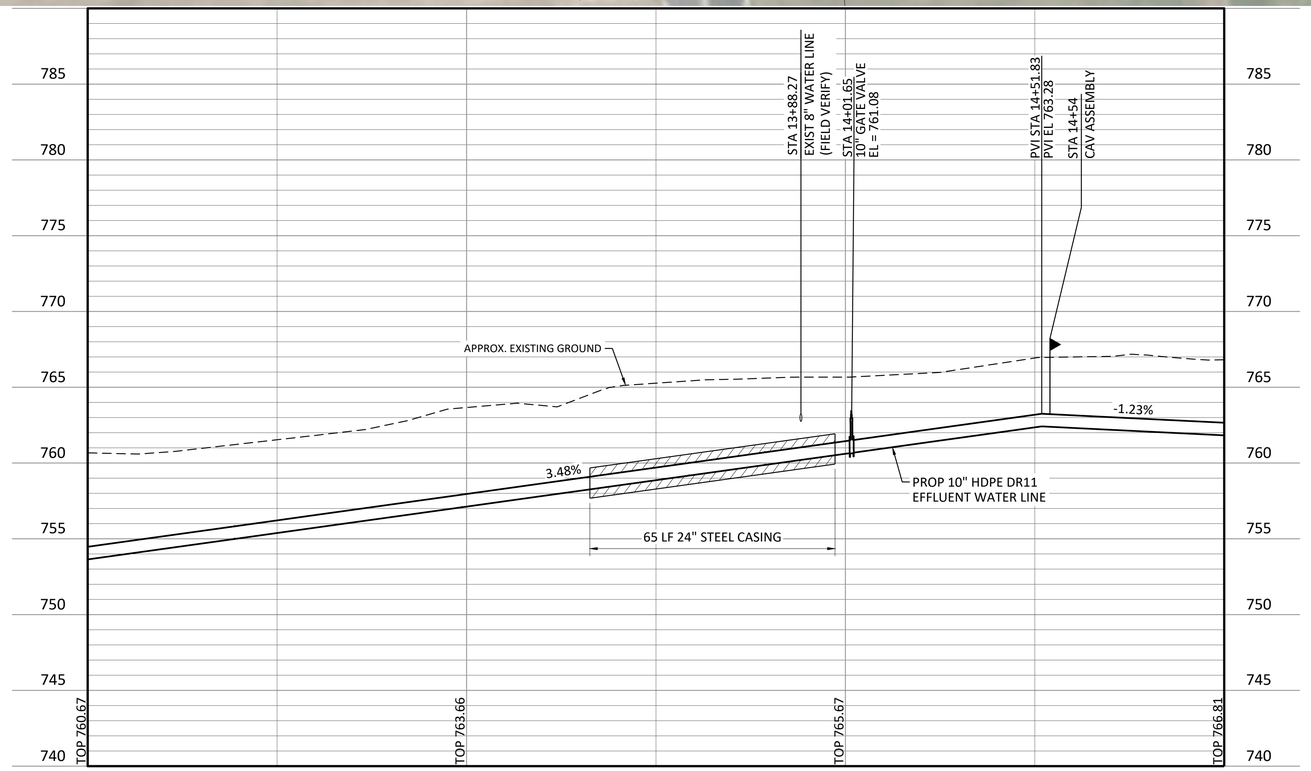

NOTES:

1. CONTRACTOR SHALL VERIFY LOCATION AND DEPTH OF ALL UTILITIES PRIOR TO BEGINNING OF CONSTRUCTION.

NORTH

0 20' 40'
SCALE IN FEET
HORIZONTAL

0 5' 10'
SCALE IN FEET
VERTICAL

65% SUBMITTAL

Freese and Nichols, Inc.
Texas Registered Engineering Firm F-2144

NOT FOR CONSTRUCTION
THIS DOCUMENT IS RELEASED FOR THE PURPOSE OF INTERIM REVIEW UNDER THE AUTHORITY OF: ANNE C. HOSKINS P.E. TEXAS NO: 103447 ON DATE: 03/21/2025 IT IS NOT TO BE USED FOR CONSTRUCTION, BIDDING OR PERMIT PURPOSES.

FREESE AND NICHOLS
10431 Morado Circle, Suite 300
Austin, Texas 78759
Phone - (512) 617-3100
Web - www.freese.com

CITY OF LAGO VISTA
EFLLUENT POND #14 LINER REPLACEMENT AND PRESSURIZED PIPELINE TO POND #2

CIVIL

CROSSINGS PLAN AND PROFILE
STA 12+00 TO STA 15+00

F&N JOB NO.	LGV23021
DATE	3/21/2025
DESIGNED	BET
DRAWN	SRL
CHECKED	JJG
APPROVED	HGO

NO.	ISSUE	BY	DATE

FILE NAME

VERIFY SCALE 0 1
Bar is one inch on original drawing. If not one inch on this sheet, adjust scale.

SHEET C-18

SEQ. 24 OF 31

ACAD Rel: 25.0s (LMS Tech)
Filename: N:\WTU\Drawings\CV-WAT-PP-WTRL01.dwg
Last Saved: 3/21/2025 2:26 PM Saved By: 02568

Plot Date: 3/21/2025 3:26 PM Plot By: 08354 Filename: N:\WTU\Drawings\CV-WAT-PP-WTRL01.dwg

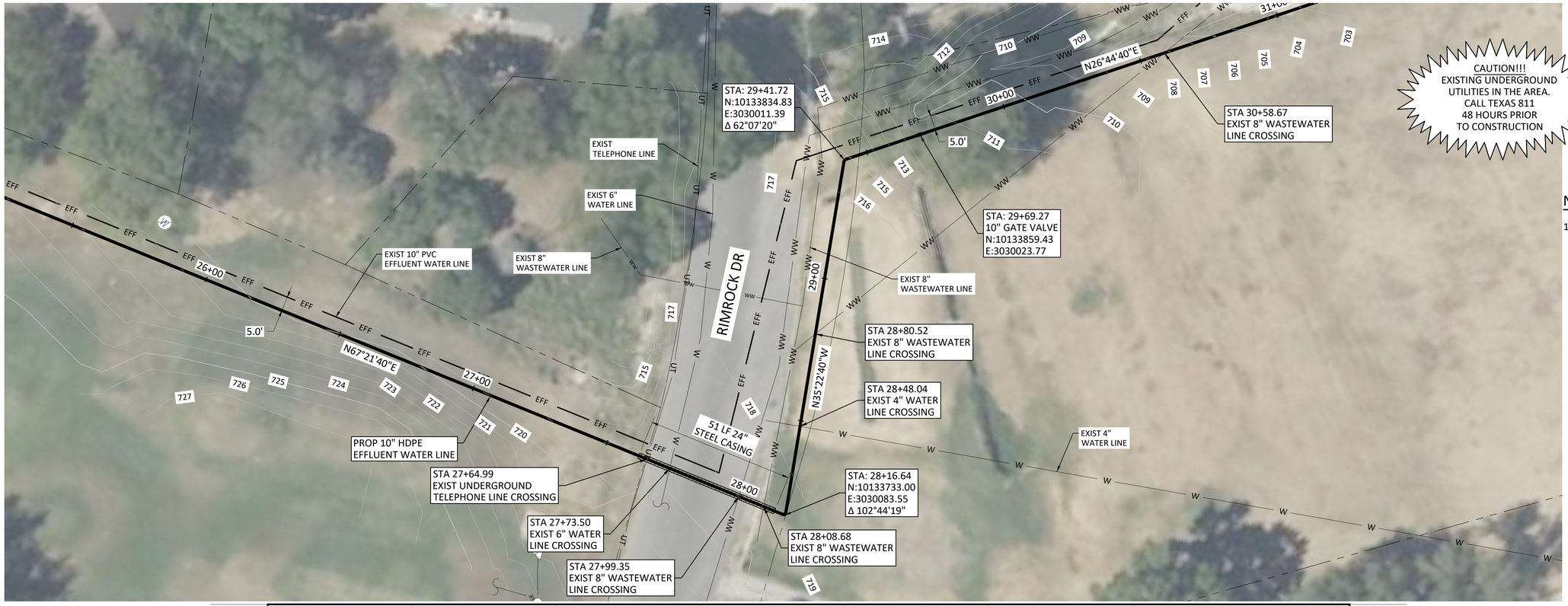

CAUTION!!!
EXISTING UNDERGROUND UTILITIES IN THE AREA.
CALL TEXAS 811
48 HOURS PRIOR TO CONSTRUCTION

NOTES:

1. CONTRACTOR SHALL VERIFY LOCATION AND DEPTH OF ALL UTILITIES PRIOR TO BEGINNING OF CONSTRUCTION.

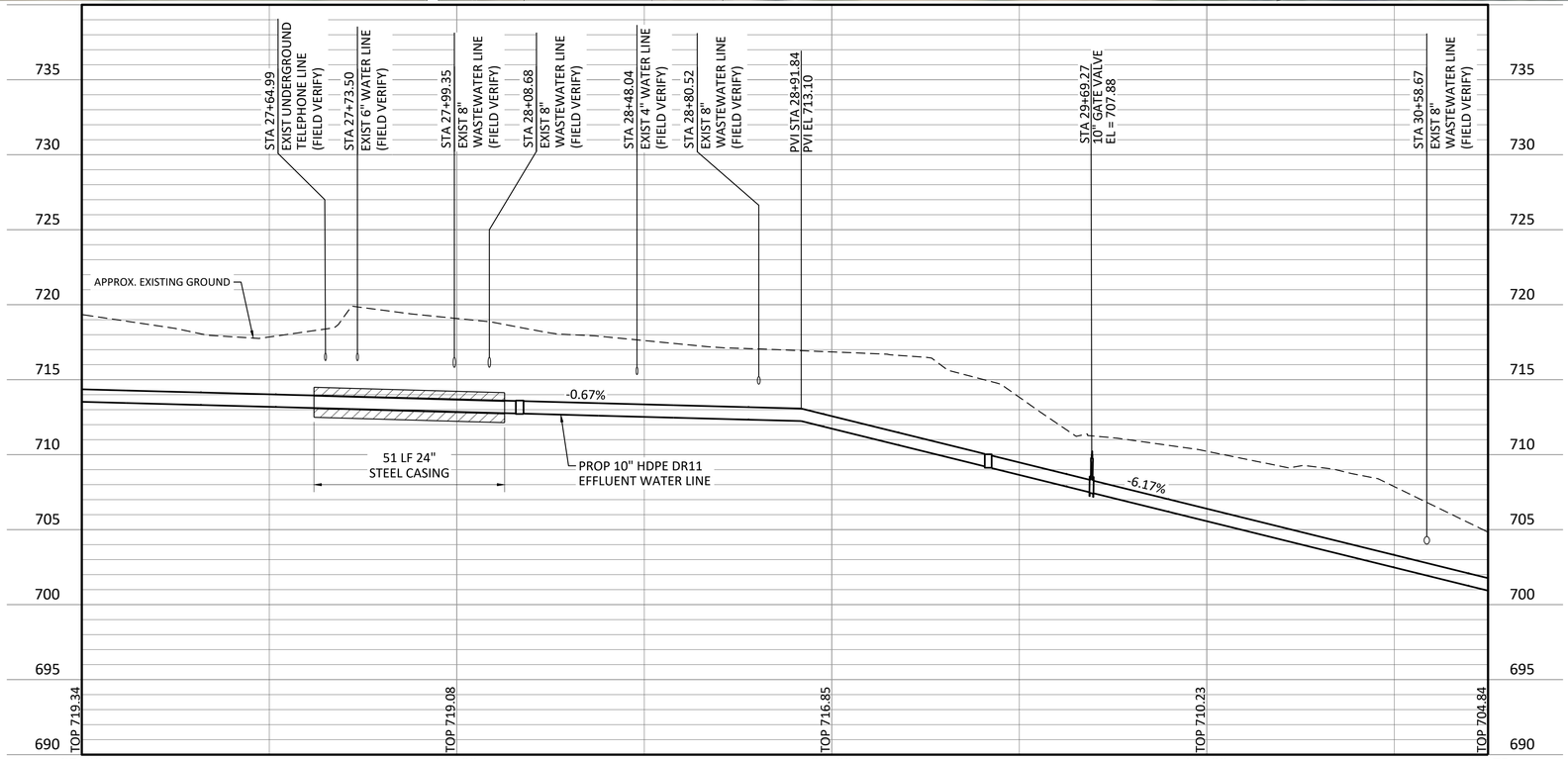

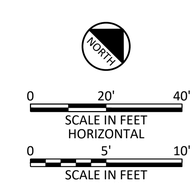

65% SUBMITTAL

Freese and Nichols, Inc.
Texas Registered Engineering Firm F-2144

NOT FOR CONSTRUCTION
THIS DOCUMENT IS RELEASED FOR THE PURPOSE OF INTERIM REVIEW UNDER THE AUTHORITY OF: ANNE C. HOSKINS P.E. TEXAS NO: 103447 ON DATE: 03/21/2025 IT IS NOT TO BE USED FOR CONSTRUCTION, BIDDING OR PERMIT PURPOSES.

FREESE AND NICHOLS
10431 Morado Circle, Suite 300
Austin, Texas 78759
Phone - (512) 617-3100
Web - www.freese.com

CITY OF LAGO VISTA
EFLLUENT POND #14 LINER REPLACEMENT AND PRESSURIZED PIPELINE TO POND #2

CIVIL

CROSSINGS PLAN AND PROFILE
STA 27+00 TO STA 30+00

F&N JOB NO.	LGV23021
DATE	3/21/2025
DESIGNED	BET
DRAWN	SRL
CHECKED	JJG
APPROVED	HGO

NO.	ISSUE	BY	DATE

FILE NAME

VERIFY SCALE 0 1
Bar is one inch on original drawing. If not one inch on this sheet, adjust scale.

SHEET C-19

SEQ. 25 OF 31

ACAD Rel: 25.0s (LMS Tech)
Filename: N:\WTU\Drawings\CV-WAT-PP-WTRL01.dwg
Last Saved: 3/21/2025 2:26 PM Saved By: 02568

Plot Date: 3/21/2025 3:27 PM Plot By: 08354 Filename: N:\WTU\Drawings\CV-WAT-PP-WTRL01.dwg

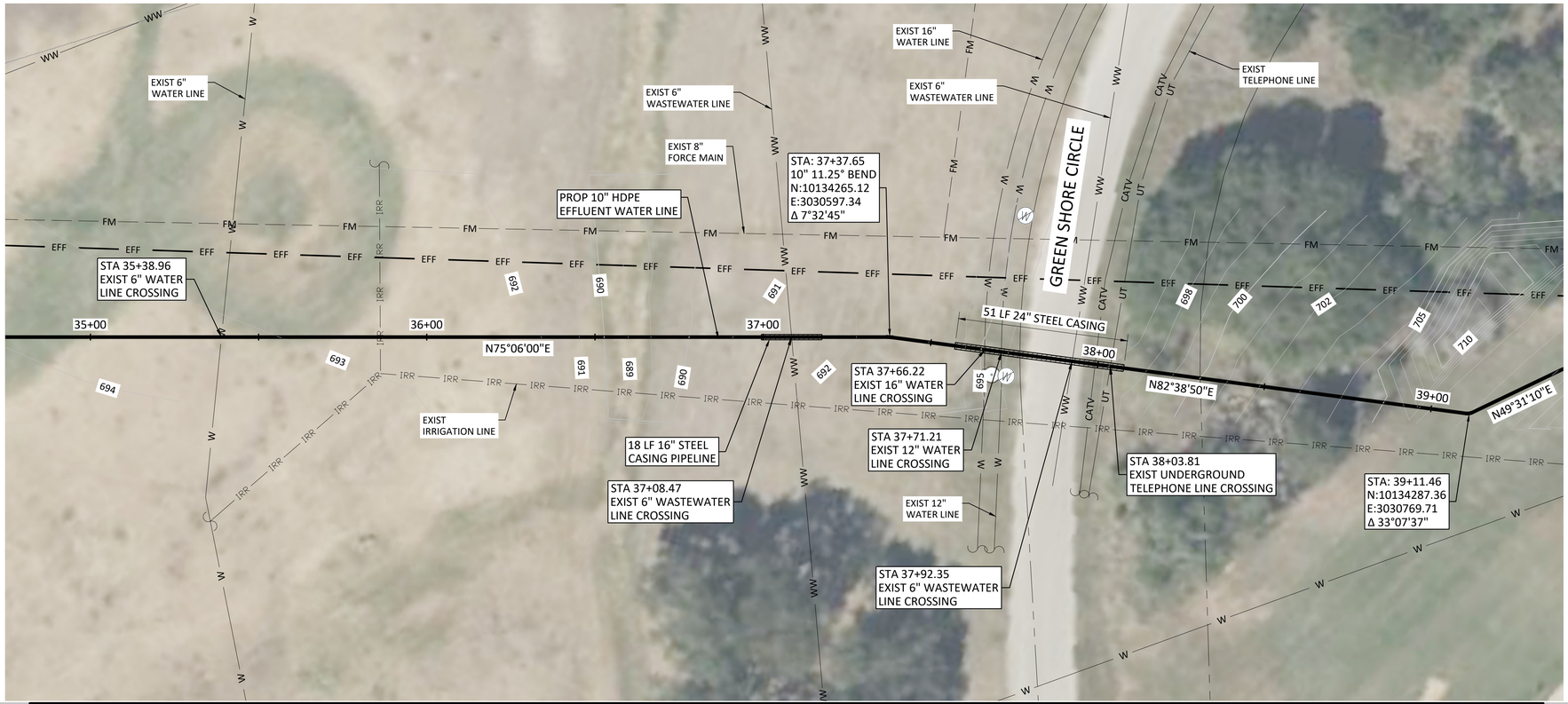

CAUTION!!!
EXISTING UNDERGROUND UTILITIES IN THE AREA.
CALL TEXAS 811
48 HOURS PRIOR TO CONSTRUCTION

NOTES:

1. CONTRACTOR SHALL VERIFY LOCATION AND DEPTH OF ALL UTILITIES PRIOR TO BEGINNING OF CONSTRUCTION.

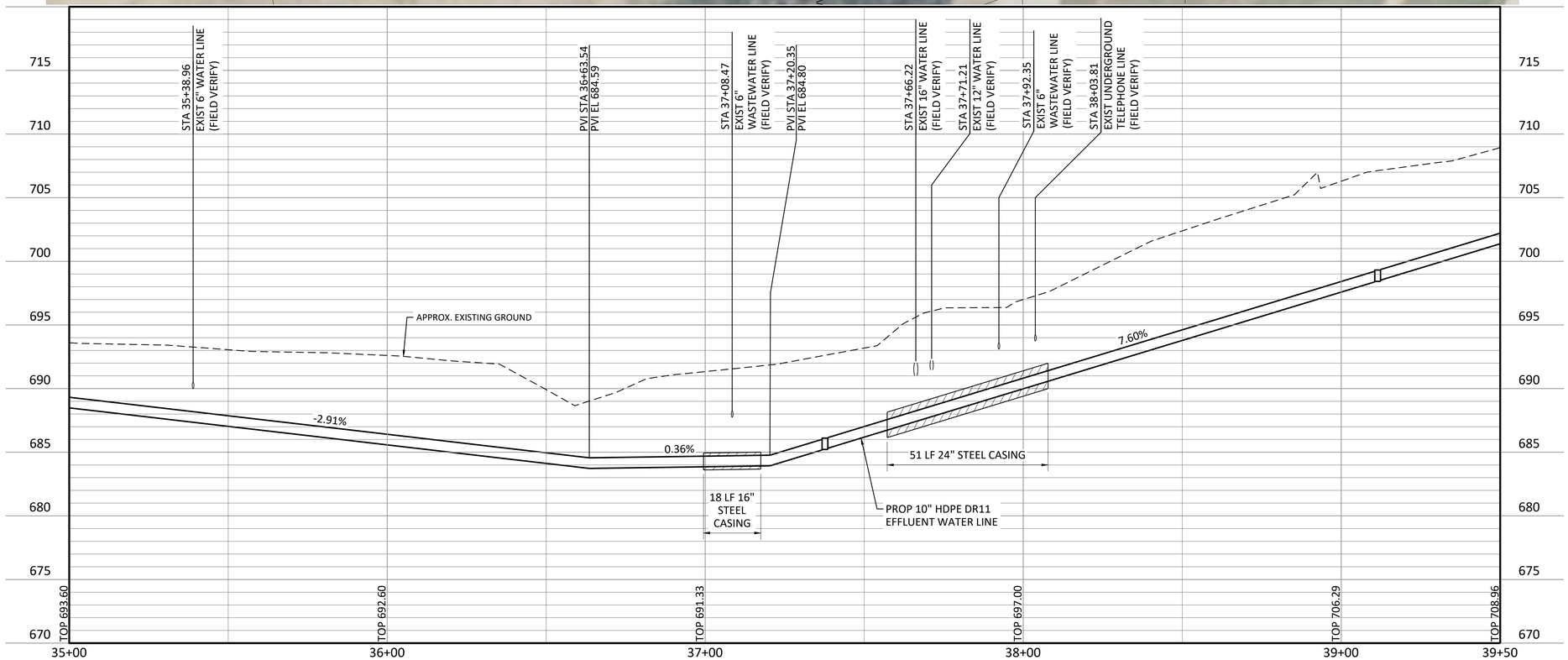

NORTH

0 20' 40'
SCALE IN FEET HORIZONTAL

0 5' 10'
SCALE IN FEET VERTICAL

65% SUBMITTAL

Freese and Nichols, Inc.
Texas Registered Engineering Firm F-2144

NOT FOR CONSTRUCTION
THIS DOCUMENT IS RELEASED FOR THE PURPOSE OF INTERIM REVIEW UNDER THE AUTHORITY OF: ANNE C. HOSKINS P.E. TEXAS NO: 103447 ON DATE: 03/21/2025 IT IS NOT TO BE USED FOR CONSTRUCTION, BIDDING OR PERMIT PURPOSES.

FREESE AND NICHOLS
10431 Morado Circle, Suite 300
Austin, Texas 78759
Phone - (512) 617-3100
Web - www.freese.com

CITY OF LAGO VISTA
EFLLUENT POND #14 LINER REPLACEMENT AND PRESSURIZED PIPELINE TO POND #2

CIVIL

CROSSINGS PLAN AND PROFILE
STA 35+00 TO STA 39+50

NO.	ISSUE	BY	DATE

F&N JOB NO.	LGV23021
DATE	3/21/2025
DESIGNED	BET
DRAWN	SRL
CHECKED	JJG
APPROVED	HGO
FILE NAME	

VERIFY SCALE 0 1
Bar is one inch on original drawing. If not one inch on this sheet, adjust scale.

SHEET C-20

SEQ. 26 OF 31

ACAD Rel: 25.0s (LMS Tech)
Filename: N:\WTU\Drawings\CV-WAT-PP-WTRL01.dwg
Last Saved: 3/21/2025 2:26 PM Saved By: 02568

Plot Date: 3/21/2025 3:27 PM Plot By: 08354 Filename: N:\WTU\Drawings\CV-WAT-PP-WTRL01.dwg

GENERAL NOTES

1. DESIGN IS IN ACCORDANCE WITH 2015 INTERNATIONAL BUILDING CODE (IBC), LOCAL AMENDMENTS, AND APPLICABLE CODE REFERENCED STANDARDS.

2. CONSTRUCTION ACTIVITIES SHALL BE IN ACCORDANCE WITH APPLICABLE OSHA, STATE, AND LOCAL REGULATIONS. THIS DESIGN IS NOT INTENDED TO CONFLICT WITH SAFETY OR APPLICABLE REGULATIONS OR TO RELIEVE THE CONTRACTOR OF COMPLIANCE WITH THESE REQUIREMENTS. IN CASE OF CONFLICT WITH SAFETY OR APPLICABLE REGULATIONS, CONTACT THE ENGINEER FOR GUIDANCE BEFORE PROCEEDING WITH FABRICATION OR CONSTRUCTION.

3. PRIOR TO FABRICATION OR CONSTRUCTION:
   A. REVIEW OTHER DISCIPLINE DRAWINGS FOR SIZE AND LOCATION OF ALL OPENINGS, DEPRESSIONS, OFFSETS, SLEEVES, CURBS, PADS, INSERTS, EQUIPMENT REQUIREMENTS, ETC., WHICH ARE NOT SHOWN ON STRUCTURAL DRAWINGS.
   B. VERIFY DIMENSIONS AND LOCATIONS OF ALL OPENINGS, DEPRESSIONS, OFFSETS, SLEEVES, CURBS, PADS, INSERTS, EQUIPMENT REQUIREMENTS, ETC.
   C. FIELD VERIFY ALL EXISTING CONDITIONS, INCLUDING LOCATION AND DIMENSIONS OF ALL EXISTING CONSTRUCTION AND UTILITIES.
   D. NOTIFY OWNER'S REPRESENTATIVE OF ANY DISCREPANCIES BETWEEN DISCIPLINES, CONSTRUCTABILITY ISSUES, OR EXISTING CONDITIONS.

4. REMOVE ALL ABANDONED FOUNDATIONS, UTILITIES, PIPELINES, ETC. THAT INTERFERE WITH NEW CONSTRUCTION.

5. PROVIDE EXCAVATION SHORING TO PROTECT AND SUPPORT FOUNDATION SOILS UNDER EXISTING STRUCTURES.

6. THE STRUCTURES ARE DESIGNED FOR STABILITY IN THE FINAL CONDITION ONLY. PROVIDE TEMPORARY BRACING AND SHORING AS REQUIRED FOR STABILITY DURING CONSTRUCTION.

7. PLANS, SECTIONS, AND DETAILS ARE NOT TO BE SCALED FOR DETERMINATION OF QUANTITIES, LENGTHS, OR FIT OF MATERIALS.

8. THE GENERAL NOTES AND TYPICAL DETAILS ARE GENERAL AND APPLY TO THE ENTIRE PROJECT EXCEPT WHERE THERE ARE SPECIFIC INDICATIONS TO THE CONTRARY.

9. SUBSTITUTION OF EXPANSION ANCHORS FOR CAST-IN-PLACE ANCHORS OR POST-INSTALLED ADHESIVE ANCHORS SHOWN ON THE DRAWINGS WILL NOT BE PERMITTED UNLESS APPROVED BY THE ENGINEER IN ADVANCE.

10. SUPPLY ALL ITEMS FOR ATTACHING MECHANICAL AND ELECTRICAL EQUIPMENT TO THE STRUCTURE TO RESIST ALL LOADS INCLUDING SEISMIC FORCES. ATTACHMENT SHALL BE MADE SO AS NOT TO OVERSTRESS STRUCTURAL MEMBERS. COORDINATE THE ATTACHMENTS AND LOCATIONS OF THE EQUIPMENT WITH THE STRUCTURAL SHOP DRAWINGS.

FOUNDATION

1. EXCAVATION DESIGN AND SAFETY IS THE RESPONSIBILITY OF THE CONTRACTOR. ANY SLOPES SHOWN ARE A MAXIMUM AND SHALL BE DECREASED AS REQUIRED FOR SAFETY OR TO MEET OSHA REQUIREMENTS.

2. EXCAVATION, SUBGRADE PREPARATION, AND BACKFILL FOR CONCRETE PIPE ENCASEMENT, INLET STRUCTURE, AND OUTLET STRUCTURE:
   A. EXCAVATE THE SITE TO THE PROPOSED FINISHED SUBGRADE WHERE CUTTING TO SUBGRADE IS REQUIRED. EXTEND THE LATERAL LIMITS OF THE EXCAVATION 2'-0" MINIMUM BEYOND THE PERIMETER OF THE FOUNDATION, UNLESS NOTED OTHERWISE.
   B. THE FOUNDATIONS WILL BEAR ON OR WITHIN THE HARD, WEATHERED TO SLIGHTLY WEATHERED LIMESTONE. PLACE A MINIMUM 3" MUD SLAB THE SAME DAY THE FINAL EXCAVATION IS COMPLETED. IF THE TOP OF THE WEATHERED TO SLIGHTLY WEATHERED LIMESTONE IS BELOW THE BOTTOM OF THE FOUNDATION, THEN OVER EXCAVATE TO EXPOSE TOP OF LIMESTONE, PLACE MUD SLAB, AND BACKFILL WITH FLOWABLE FILL (CLSM) TO BOTTOM OF FOUNDATION.
   C. BACKFILL MATERIAL SHALL BE IN ACCORDANCE WITH THE PROJECT SPECIFICATIONS. BACKFILL MATERIAL SHALL BE PLACED IN ACCORDANCE WITH THE PROJECT SPECIFICATIONS.
   D. CONTROLLED LOW STRENGTH MATERIAL (CLSM) FILL SHALL BE PLACED IN ACCORDANCE WITH THE PROJECT SPECIFICATIONS.
   E. IN-PLACE FIELD DENSITY TESTS SHALL BE PERFORMED IN ACCORDANCE WITH THE PROJECT SPECIFICATIONS.
   F. THE SUBGRADE MOISTURE CONTENT AND DENSITY SHALL BE MAINTAINED DURING CONSTRUCTION.

3. ALLOWABLE DESIGN BEARING PRESSURE IS 15,000 PSF FOR FOUNDATIONS BEARING ON UNDISTURBED, HARD, WEATHERED TO SLIGHTLY WEATHERED LIMESTONE. FOUNDATIONS SHALL BEAR ON SOUND AND LEVEL EXCAVATIONS. REMOVE ANY AND ALL LOOSE DEBRIS FROM EXPOSED BEARING SURFACE. SUITABLE BEARING MATERIALS SHALL BE VERIFIED BY A LICENSED GEOTECHNICAL ENGINEER.

4. DO NOT BACKFILL FOUNDATION WALLS UNTIL CONCRETE HAS REACHED ITS SPECIFIED 28-DAY COMPRESSIVE STRENGTH OR 7 DAYS, WHICHEVER IS LONGER, OR UNTIL THE RESTRAINING SLABS OR ADEQUATE BRACING ARE IN PLACE. DO NOT PERMIT ROLLERS TO OPERATE WITHIN 3'-0" OF THE STRUCTURES.

5. MUD SLABS, WHERE INDICATED, SHALL BE PLACED THE SAME DAY EXCAVATION IS COMPLETED. THE GEOTECHNICAL ENGINEER SHALL VERIFY THAT THE BEARING SURFACE IS FREE OF LOOSE AND/OR DELETERIOUS MATERIAL BEFORE PLACEMENT OF MUD SLAB.

CONCRETE AND REINFORCEMENT

1. CONCRETE CONSTRUCTION SHALL CONFORM TO THE LATEST EDITIONS OF ACI 350 AND ACI 318 AND US ARMY CORPS OF ENGINEERS EM 1110-2-2104.
2. ALL DETAILING, FABRICATION AND ERECTION OF REINFORCING BARS, UNLESS NOTED OTHERWISE, SHALL BE IN ACCORDANCE WITH THE MANUAL OF STANDARD PRACTICE FOR DETAILING REINFORCED CONCRETE STRUCTURES (ACI 315), LATEST EDITION.
3. CONCRETE SHALL HAVE A MINIMUM 28-DAY COMPRESSIVE STRENGTH OF 4,500 PSI UNLESS SPECIFIED OTHERWISE.

4. ALL REINFORCING SHALL BE IN ACCORDANCE WITH ASTM A615, GRADE 60, DEFORMED.

5. CONCRETE CLEAR COVER OVER REINFORCING SHALL BE AS NOTED BELOW, UNLESS NOTED OTHERWISE.
   A. CAST AGAINST AND PERMANENTLY EXPOSED TO EARTH: 3"
   B. ALL OTHER: 2"
   C. SEE DRAWINGS FOR EXCEPTIONS.

6. ALL EXPOSED EDGES OF CONCRETE SHALL BE CHAMFERED 3/4" INSIDE FORMS OR TOOLED TO 3/4" RADIUS ON SLABS UNLESS NOTED OTHERWISE.

7. ALL CONSTRUCTION JOINTS (CJ) SHALL BE THOROUGHLY CLEANED AND PURPOSELY ROUGHENED TO 1/4" AMPLITUDE PRIOR TO PLACING ADJACENT CONCRETE.

8. JOINTS IN EXPOSED CONCRETE, EXCEPT SLABS, SHALL BE USED WITH A MAXIMUM SPACING OF 45'-0". JOINTS IN BURIED AND UNEXPOSED CONCRETE, SHALL BE USED WITH A MAXIMUM SPACING OF 90 FEET.

9. ADDITIONAL CONSTRUCTION JOINTS SHALL HAVE PRIOR APPROVAL OF THE ENGINEER.

10. PENETRATIONS OTHER THAN SHOWN SHALL NOT BE ALLOWED WITHOUT PRIOR APPROVAL FROM THE ENGINEER.

11. IN CASES WHERE REINFORCING BARS CANNOT BE EXTENDED AS FAR AS REQUIRED DUE TO THE LIMITED EXTENT OF THE ADJACENT CONCRETE STRUCTURE, THE BARS SHALL EXTEND AS FAR AS POSSIBLE AND END IN STANDARD HOOKS.

12. HOOKS SHOWN ON DRAWINGS SHALL BE ASSUMED TO BE STANDARD HOOKS PER ACI 318 UNLESS NOTED OTHERWISE.

13. LAP SPLICES IN WALLS SHALL BE STAGGERED UNLESS NOTED OTHERWISE.

14. ALL REINFORCING SHALL BE CONTINUOUS. CONTINUOUS BARS SHALL LAP 48 BAR DIAMETERS OF SMALLER BAR LAPPED, UNLESS NOTED OTHERWISE. ALL REBAR EMBEDMENT LENGTHS SHALL BE 36 BAR DIAMETERS, UNLESS NOTED OTHERWISE.

15. THE CONTRACTOR SHALL BE RESPONSIBLE FOR THE DESIGN OF ALL FORMING, TEMPORARY BRACING AND SHORING.

16. THE OWNER OR THE OWNER'S REPRESENTATIVE SHALL CONDUCT ISOLATION TESTS BETWEEN THE STEEL PIPE AND THE REINFORCING BARS ON THE INLET AND OUTLET PIPES PRIOR TO PLACEMENT OF CONCRETE. THE CONTRACTOR IS REQUIRED TO ENABLE THE INSPECTION AND TESTING TO OCCUR BY PROVIDING ACCESS TO THE ELEMENTS. IN ADDITION, THE CONTRACTOR SHALL PROVIDE 48 HOURS ADVANCE NOTICE TO THE OWNER OR THE OWNER'S REPRESENTATIVE REGARDING ALL CONSTRUCTION ACTIVITIES RELATED TO THE INSPECTION AND TESTING.

17. ALL REINFORCING SHALL BE CONTINUOUS. CONTINUOUS BARS SHALL LAP IN ACCORDANCE WITH THE FOLLOWING TABLE, UNLESS NOTED OTHERWISE. "TOP BARS " ARE HORIZONTAL REINFORCEMENT PLACED SO THAT MORE THAN 12" OF FRESH CONCRETE IS CAST IN THE MEMBER BELOW THE BARS (INCLUDING WALLS). "OTHER BARS" ARE ALL BARS OTHER THAN TOP BARS.

REBAR LAP SPLICE LENGTHS (INCHES)			
BAR SIZE	MIN CONCRETE CLEAR COVER	4,500 PSI	
		TOP BARS	OTHER BARS
#3	1.0"	16	16
#4	1.0"	20	16
#5	1.0"	28	22
	1.5"	24	19
#6	1.0"	38	30
	1.5"	28	22
#7	1.5"	46	36
	2.0"	41	32
#8	1.5"	58	45
	2.0"	46	36

REBAR LAP SPLICE LENGTHS (INCHES)			
BAR SIZE	MIN CONCRETE CLEAR COVER	4,500 PSI	
		TOP BARS	OTHER BARS
#9	1.5"	71	55
	2.0"	58	45
	2.5"	52	40
#10	1.5"	86	67
	2.0"	71	55
	2.5"	62	48
#11	1.5"	110	85
	2.0"	85	66
	2.5"	76	59

18. THE SYMBOL —⌒— INDICATES A LAPPED SPLICE, NOT A BEND IN THE BAR.
19. UNLESS INDICATED OTHER WISE, LAP SPLICES IN BEAMS AND WALLS SHALL BE STAGGERED.
20. ALL SPLICES SHALL BE CLASS "B" SPLICES WITH THE APPROPRIATE ALLOWANCES FOR BAR SPACING AND DEPTH OF CONCRETE CAST BELOW THE REINFORCEMENT UNLESS OTHER WISED NOTED.

21. SPLICES SHALL BE LOCATED WHERE INDICATED ON THE DRAWINGS OR AS AUTHORIZED BY THE ENGINEER.

22. WHEN REINFORCING BARS OF DIFFERENT SIZE ARE TO BE SPLICED, THE LENGTH OF LAP SHALL BE GOVERNED BY THE SMALLER DIAMETER BAR.

23. SPLICES SHALL BE STAGGERED TO GIVE 12 INCHES CLEAR BETWEEN ENDS OF ADJACENT SPLICES, IF BARS ARE SPACED CLOSER THAN 6 INCHES OR 6 BAR DIAMETERS.

24. SPLICES IN REINFORCEMENT AT VERTICAL CONSTRUCTION JOINTS MAY BE SHIFTED TO AGREE WITH THE SEQUENCE OF CONSTRUCTION, UNLESS OTHERWISE SPECIFIED.

25. NON-CONTACT LAP SPLICES SHALL NOT BE SPACED FARTHER APART THAN ONE-FIFTH OF THE REQUIRED LENGTH OF LAP OR 6 INCHES.

26. REINFORCEMENT PARALLELING CONSTRUCTION JOINTS SHALL HAVE A MINIMUM OF 2" CONCRETE COVER.

27. IN CASES WHERE REINFORCING BARS CANNOT BE EXTENDED AS FAR AS REQUIRED DUE TO THE LIMITED EXTENT OF THE ADJACENT CONCRETE STRUCTURE, THE BARS SHALL EXTEND AS FAR AS POSSIBLE AND END IN STANDARD HOOKS.

28. UNLESS NOTED OTHERWISE, HOOKS SHOWN ON DRAWINGS SHALL BE ASSUMED TO BE STANDARD HOOKS PER ACI 318.

29. THE CONTRACTOR SHALL BE RESPONSIBLE FO THTE DESIGN OF ALL FORMING, TEMPORARY BRACING AND SHORING.

30. CONDUITS AND PIPING EMBEDDED IN CONCRETE SHALL BE SPACED A MINIMUM OF FOUR DIAMETERS AND THE OUTSIDE DIAMETER SHALL BE LESS THAN 30% OF THE MEMBER THICKNESS PLACED BETWEEN LAYERS OF REINFORCING.

31. BUNDLED BARS ARE BARS PLACED IN CONTACT WITH EACH OTHER IN GROUPS OF TWO, THREE, OR FOUR. INDIVIDUAL BAR SPLICES WITHIN A BUNDLE SHALL NOT OVERLAP. ENTIRE BUNDLES SHALL NOT BE LAP SPLICED.

32. AN OPEN CIRCLE (O) AT THE END OF A BAR INDICATES A BEND TURNED AWAY FROM OBSERVER A CLOSED CIRCLE () AT THE END OF A BAR INDICATES A BEND TURNED TOWARDS THE OBSERVER.

33. IN NO CASE SHALL BARS BE BENT TURNED TOWARDS THE OBSERVER.

34. IN NO CASE SHALL BARS BE BENT TO GREATER THAN TURNED TOWARDS THE OBSERVER.

35. IN NO CASE SHALL BARS BE BENT TO GREAT THAN 6 TO 1 SLOPE.

36. REINFORCEMENT MAY BE ADJUSTED LATERALLY TO MAINTAIN A CLEAR DISTANCE OF A T LEAST 1" BETWEEN THE REINFORCEMENT AND KEYS, WATER STOPS, ANCHOR BOLTS, FORM TIES, CONDUITS, AND OTHER EMBEDDED MATERIAL. IN HEAVILY REINFORCED AREAS RELOCATION OF THE EMBEDDED MATERIAL MUST BE CONSIDERED.

POST-INSTALLED ANCHORS (EXPANSION OR ADHESIVE)

1. INSTALL IN ACCORDANCE WITH MANUFACTURER'S PRINTED INSTALLATION INSTRUCTIONS (MPII), BUT NOT LESS THAN THAT INDICATED BELOW.

2. ADHESIVE ANCHORS SHALL ONLY BE INSTALLED BY CONSTRUCTION PERSONNEL CERTIFIED UNDER ACI/CRSI ADHESIVE ANCHOR INSTALLER CERTIFICATION PROGRAM OR APPROVED EQUAL. SUBMIT CERTIFICATIONS AS RECORD DATA PRIOR TO ANCHOR INSTALLATION.

3. ANCHOR DIAMETER AND EMBEDMENT SHALL BE AS INDICATED.

4. HOLES SHALL BE DRILLED USING ROTARY HAMMER DRILLS WITH ANSI MATCHED TOLERANCE CARBIDE-TIPPED DRILL BITS. DRILL BIT DIAMETER SHALL MATCH DIAMETER RECOMMENDED BY MANUFACTURER. DRILL HOLES USING HILTI SAFESET TECHNOLOGY, SIMPSON STRONG-TIE SPEED CLEAN DXS DUST EXTRACTION SYSTEM, OR APPROVED EQUAL.

5. USE CARE AND CAUTION WHEN INSTALLING TO AVOID CUTTING OR DAMAGING EXISTING REINFORCING STEEL. FIELD VERIFY EXISTING REINFORCING LOCATIONS PRIOR TO FABRICATION OR CONSTRUCTION, AND THEN COORDINATE REBAR LOCATIONS WITH SHOP DRAWINGS.

6. EXPANSION ANCHORS SHALL BE A STUD BOLT TYPE WITH HEX HEAD NUT AND SHALL BE STAINLESS STEEL 316 UNLESS NOTED OTHERWISE, AND AS NOTED BELOW:
   A. ANCHORS SHALL BE HILTI KWIK BOLT TZ2, SIMPSON STRONG-TIE STRONG-BOLT 2, OR AN APPROVED EQUAL. SUBMIT PUBLISHED COMPARISONS BETWEEN EACH SPECIFIED AND EACH ALTERNATE ANCHOR.
   B. VERIFY HOLE IS CLEAR OF DUST AND DEBRIS.
   C. DRIVE ANCHOR INTO HOLE WITH A HAMMER AND THEN TIGHTEN TO SPECIFIED TORQUE.

7. ADHESIVE ANCHORS SHALL BE DEFORMED REINFORCING BARS, ASTM A615, GR 60, OR STAINLESS STEEL 316 THREADED ROD UNLESS NOTED OTHERWISE, AND AS NOTED BELOW:
   A. ADHESIVE SHALL BE HILTI HIT-RE 500 V3, SIMPSON STRONG-TIE SET 3G, OR AN APPROVED EQUAL. SUBMIT PUBLISHED COMPARISONS BETWEEN EACH SPECIFIED AND EACH ALTERNATE ANCHOR.
   B. PRIOR TO INSTALLATION: ALL DEFORMED BARS AND THREADED ROD SHALL BE CLEAN, FREE OF OIL, GREASE, OR OTHER RESIDUE, IN ACCORDANCE WITH MPII.
   C. VERIFY HOLE IS CLEAR OF DUST AND DEBRIS.
   D. INSTALL ADHESIVE STARTING AT BACK OF HOLE. AS REQUIRED BY MPII, USE MANUFACTURER SUPPLIED PISTON PLUG INJECTION SYSTEM FOR ALL HORIZONTAL AND VERTICALLY INCLINED HOLES.
   E. INSTALL ANCHOR BY SIMULTANEOUSLY TWISTING AND INSERTING INTO HOLE.
   F. ALLOW ANCHOR TO SET REQUIRED TIME. DO NOT DISTURB.
   G. TIGHTEN NUT. DO NOT OVER-TORQUE.
   H. MINIMUM CONCRETE AGE AT TIME OF INSTALLATION: 28 DAYS
   I. CONCRETE TEMPERATURE RANGE AT TIME OF INSTALLATION SHALL BE: 41 DEG F TO 104 DEG F.
   J. CONCRETE MOISTURE CONDITION AT TIME OF INSTALLATION: DRY.

STAINLESS STEEL

1. STAINLESS STEEL MATERIAL SHALL BE IN ACCORDANCE WITH:
   A. PLATES: ASTM A240, S30403 OR S31603, WHERE INDICATED, Fy = 25 KSI, Fu = 70 KSI
   B. BOLTS: ASTM F593, ALLOY GROUP 2, CONDITION CW

IBC CHAPTER 17 SPECIAL INSPECTION REQUIREMENTS

1. THE OWNER OR THE OWNER'S REPRESENTATIVE IS REQUIRED TO PERFORM SPECIAL INSPECTIONS IN ACCORDANCE WITH 2015 IBC AND AS OUTLINED IN THE STATEMENT OF SPECIAL INSPECTIONS.
2. THE CONTRACTOR IS REQUIRED TO ACCOMMODATE THE ABOVE INSPECTIONS AND PROVIDE ACCESS TO THE ELEMENTS REQUIRING INSPECTIONS. IN ADDITION, THE CONTRACTOR SHALL PROVIDE 48 HOURS ADVANCED NOTICE TO THE OWNER'S REPRESENTATIVE REGARDING ALL CONSTRUCTION ACTIVITIES RELATED TO AND/OR AFFECTING THE REQUIRED SPECIAL INSPECTIONS.

65% SUBMITTAL

Freese and Nichols, Inc.
Texas Registered Engineering Firm F-2144

NOT FOR CONSTRUCTION
THIS DOCUMENT IS RELEASED FOR THE PURPOSE OF INTERIM REVIEW UNDER THE AUTHORITY OF BRYCE E. SILVEY, P.E. 03/21/2025 TEXAS NO: 145856 ON DATE 03/21/2025 IT IS NOT TO BE USED FOR CONSTRUCTION, BIDDING OR PERMIT PURPOSES.

FREESE NICHOLS
10431 Morado Circle, Suite 300
Austin, Texas 78759
Phone - (512) 617-3100
Web - www.freese.com

CITY OF LAGO VISTA
EFFLUENT POND #14 LINER REPLACEMENT AND PRESSURIZED PIPELINE TO POND #2
STRUCTURAL
STRUCTURAL NOTES

FAN JOB NO.	LGV23021				
DATE	3/21/2025				
DESIGNED	BET				
DRAWN	SRL				
CHECKED	JJG				
APPROVED	HGO				

NO.	ISSUE	BY	DATE	FILE NAME

Bar is one inch on original drawing. If not one inch on this sheet, adjust scale.
VERIFY SCALE 0 1

SHEET S-1
SEQ. 27 OF 31

ACAD Rel: 25.0s (LMS Tech)
Filename: N:\WRD\Drawings\AMENDMENT 1\ST-ALL-NOTES.dwg
Last Saved: 3/20/2025 8:47 AM Saved By: 08354

Plot Date: 3/21/2025 3:28 PM Plot By: 08354 Filename: N:\WRD\Drawings\AMENDMENT 1\ST-ALL-NOTES.dwg

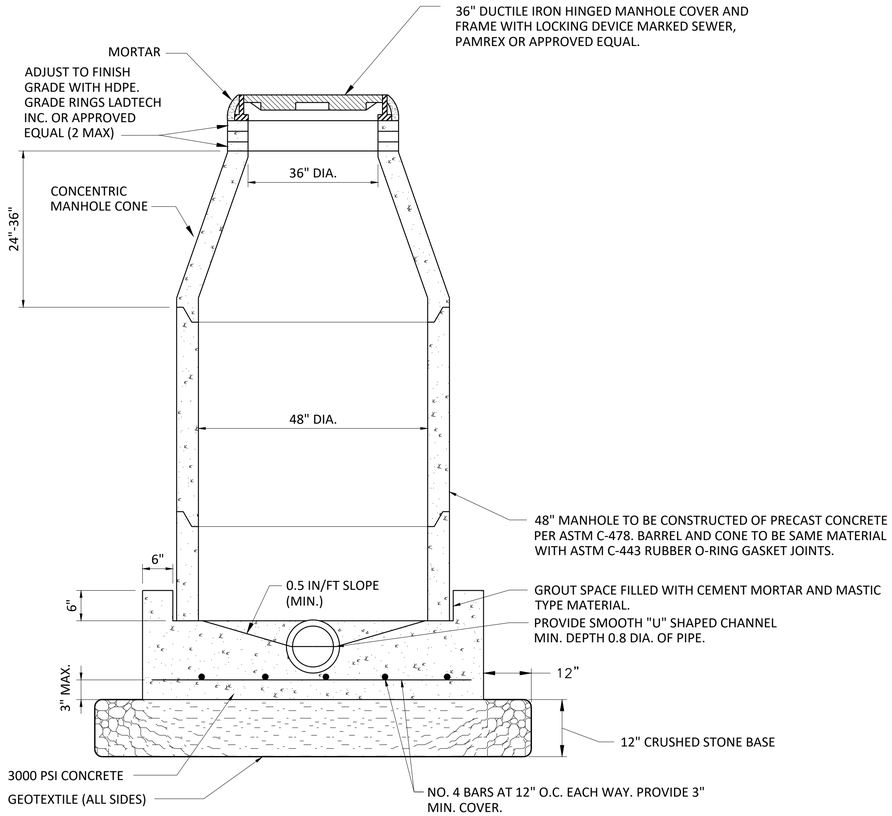

302
TYPE C

48" PRECAST CONCRETE MANHOLE DETAIL

NOT TO SCALE

GENERAL NOTES FOR MANHOLE CONSTRUCTION

1. CONSTRUCT MANHOLE FLUSH WITH FINISHED GRADE ON STREET AND HIGHWAY R.O.W. UNLESS OTHERWISE INDICATED ON PLANS.
2. TOP ELEVATION OF MANHOLE CONSTRUCTED IN DRAINAGE DITCHES SHALL BE AT LEAST 1.0' ABOVE DRAIN FLOWLINE.
3. MANHOLES ADJACENT TO STREETS AND BUILDINGS SHALL BE NO MORE THAN 6" ABOVE FINISHED GRADE.
4. WATERTIGHT, SIZE-ON-SIZE RESILIENT CONNECTORS ALLOWING FOR DIFFERENTIAL SETTLEMENT SHALL BE USED TO CONNECT PIPE TO MANHOLES.
5. PIPE TO MANHOLE CONNECTORS SHALL CONFORM TO ASTM C-923.
6. IN MANHOLES WITH PIPES OF DIFFERENT SIZES, THE TOPS OF THE PIPES SHALL BE PLACED AT THE SAME ELEVATION AND FLOW CHANNELS IN THE INVERT SLOPED ON AN EVEN SLOPE FROM PIPE TO PIPE.
7. THE BENCH PROVIDED ABOVE THE CHANNEL SHALL BE SLOPED AT A MINIMUM OF 0.5 INCH PER FOOT.
8. MAXIMUM PIPE OD FOR 48" DIAMETER MANHOLE IS 18" PIPE. REFER TO SPECIFICATION 02601 FOR LARGER PIPE DIAMETERS.

Freese and Nichols, Inc.
Texas Registered Engineering Firm F-2144

NOT FOR CONSTRUCTION
THIS DOCUMENT IS RELEASED FOR THE PURPOSE OF INTERIM REVIEW UNDER THE AUTHORITY OF: BRYCE EARL TODD P.E. TEXAS NO: 145856 ON DATE: 03/21/2025 IT IS NOT TO BE USED FOR CONSTRUCTION, BIDDING OR PERMIT PURPOSES.

FREESE AND NICHOLS
10431 Morado Circle, Suite 300
Austin, Texas 78759
Phone - (512) 617-3100
Web - www.freese.com

CITY OF LAGO VISTA
EFLLUENT POND #14 LINER REPLACEMENT AND PRESSURIZED PIPELINE TO POND #2

STRUCTURAL
POND #14 SUMP PIT

F&N JOB NO.	LGV23021
DATE	3/21/2025
DESIGNED	BET
DRAWN	SRL
CHECKED	JJG
APPROVED	HGO

NO.	ISSUE	BY	DATE

FILE NAME

VERIFY SCALE 0 1
Bar is one inch on original drawing. If not one inch on this sheet, adjust scale.

SHEET S-2

SEQ. 28 OF 31

65% SUBMITTAL

ACAD Rel: 25.0s (LMS Tech)
Filename: N:\WRD\Drawings\AMENDMENT 1\ST-PD14-SUMPPIT.dwg
Last Saved: 3/20/2025 8:47 AM Saved By: 08354

Plot Date: 3/21/2025 3:30 PM Plot By: 08354 Filename: N:\WRD\Drawings\AMENDMENT 1\ST-PD14-SUMPPIT.dwg

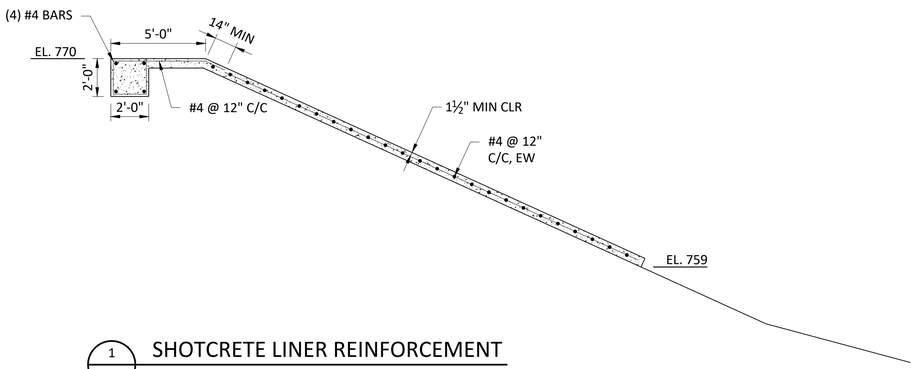

1 SHOTCRETE LINER REINFORCEMENT
-

0 1' 2' 4' 8'
1/4"=1'-0"

65% SUBMITTAL

Freese and Nichols, Inc.
Texas Registered Engineering Firm F-2144

NOT FOR CONSTRUCTION
THIS DOCUMENT IS RELEASED FOR THE PURPOSE OF INTERIM REVIEW UNDER THE AUTHORITY OF: BRYCE EARL TODD P.E. TEXAS NO: 145856 ON DATE: 03/21/2025 IT IS NOT TO BE USED FOR CONSTRUCTION, BIDDING OR PERMIT PURPOSES.

FREESE AND NICHOLS
10431 Morado Circle, Suite 300
Austin, Texas 78759
Phone - (512) 617-3100
Web - www.freese.com

CITY OF LAGO VISTA
EFLLUENT POND #14 LINER REPLACEMENT AND PRESSURIZED PIPELINE TO POND #2
STRUCTURAL
POND #14 SHOTCRETE LINER REINFORCEMENT

NO.	ISSUE	BY	DATE

F&N JOB NO. LGV23021
DATE 3/21/2025
DESIGNED BET
DRAWN SRL
CHECKED JJG
APPROVED HGO
FILE NAME

VERIFY SCALE 0 1
Bar is one inch on original drawing. If not one inch on this sheet, adjust scale.

SHEET S-3
SEQ. 29 OF 31

ACAD Rel: 25.0s (LMS Tech)
Filename: N:\WRD\Drawings\AMENDMENT 1\ST-PD2-SUMPPIT.dwg
Last Saved: 3/20/2025 8:46 AM Saved By: 08354

Plot Date: 3/21/2025 3:31 PM Plot By: 08354 Filename: N:\WRD\Drawings\AMENDMENT 1\ST-PD2-SUMPPIT.dwg

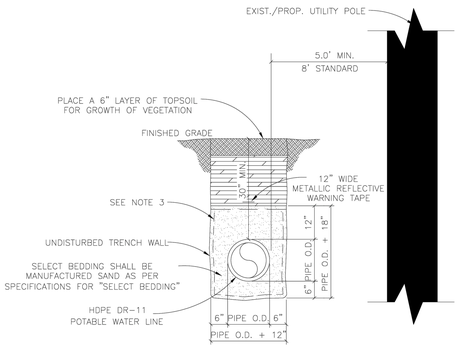

NOTES:

1. ALL CONDUITS TO INCLUDE A 1500 LB CONTINUOUS MULE TAPE IN PLACE BETWEEN PULL BOXES.
2. ALL INSTALLED CONDUITS MUST PASS A PULL TEST WITH A FULL SIZED MANDREL.
3. FILTER FABRIC ALONG THE TRENCH IS REQUIRED WHEN GROUNDWATER IS PRESENT
4. CONTRACTOR HAS THE OPTION, AT CONTRACTOR'S COST, TO PLACE BEDDING MATERIAL UP TO 6" FROM FINISHED GRADE.

SCALE: NOT TO SCALE

The City of LagoVista, Texas

CITY OF LAGO VISTA
5803 THUNDERBIRD
LAGO VISTA, TX 78645
PH: (512) 267-1155

These documents were prepared by, or under the supervision of:
ERIC BELAJ 107148 February 3, 2019
Engineer's Name PE# Date
Engineer's Signature

SECTION **WATER**
DETAIL NO. WT-1
TITLE EMBEDMENT UNDER UNPAVED AREAS

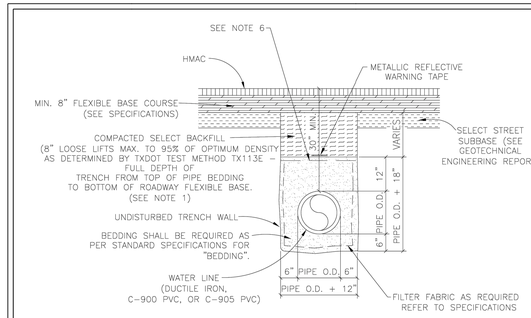

NOTES:

1. A MINIMUM OF ONE DENSITY TEST SHALL BE TAKEN EVERY TWO HUNDRED (200) FEET FOR EACH EIGHT (8) INCH LIFT OF SELECT BACKFILL. PROCTORS FOR MATERIALS USED IN BACKFILLING SHALL BE OBTAINED BY A CERTIFIED LABORATORY. DENSITY TESTS SHALL BE CONDUCTED BY A CERTIFIED LABORATORY OR THE PERMITTEE'S CONSULTANTS. ALL DENSITY TESTS SHALL BE COMPLETED AND ACCEPTED ON EACH LAYER PRIOR TO ADDITIONAL BACKFILLING. A COPY OF ALL COMPLETED AND ACCEPTED DENSITY TESTS SHALL BE FURNISHED TO THE OWNER. BACKFILL COMPACTION SHALL BE A MINIMUM 95% OF OPTIMUM DENSITY AS DETERMINED BY TxDOT 113E TEST METHOD.
2. CONTRACTOR OR ENGINEER MAY REQUEST FOR USE OF ALTERNATE BACKFILL MATERIAL. ALTERNATE MATERIALS AND TESTING PROTOCOL MUST BE SUBMITTED TO AND APPROVED BY THE CITY ENGINEER PRIOR TO USE.
3. REFER TO GEOTECHNICAL REPORT FOR ADDITIONAL SUBGRADE, FLEXIBLE BASE AND PAVEMENT REQUIREMENTS.
4. ALL COMMUNICATION CONDUIT TO INCLUDE A 1500 LB CONTINUOUS MULE TAPE IN PLACE BETWEEN PULL BOXES.
5. ALL INSTALLED CONDUITS MUST PASS A PULL TEST WITH A FULL SIZED MANDREL.
6. FILTER FABRIC ALONG THE TOP OF THE TRENCH IS REQUIRED REGARDLESS OF SUBSURFACE CONDITIONS.

SCALE: NOT TO SCALE

The City of LagoVista, Texas

CITY OF LAGO VISTA
5803 THUNDERBIRD
LAGO VISTA, TX 78645
PH: (512) 267-1155

These documents were prepared by, or under the supervision of:
ERIC BELAJ 107148 February 3, 2019
Engineer's Name PE# Date
Engineer's Signature

SECTION **WATER**
DETAIL NO. WT-2
TITLE EMBEDMENT UNDER PROPOSED PAVEMENT

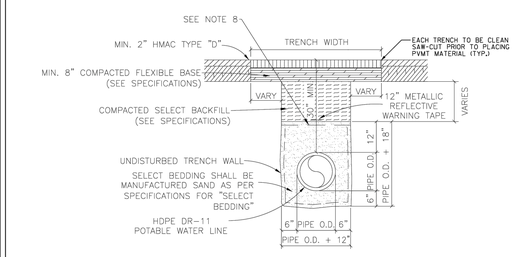

NOTES:

1. REPLACED BASE MATERIAL OVER DITCH SHALL BE A MINIMUM OF TWICE THE THICKNESS OF THE ORIGINAL BASE AND IN NO CASE LESS THAN 8".
2. BASE MATERIAL SHALL BE PLACED IN MAXIMUM 6" LIFTS AND EACH LIFT COMPACTED TO SPECIFIED DENSITY.
3. ASPHALT CONCRETE PAVEMENT JOINTS SHALL BE MECHANICALLY SAWED.
4. A MINIMUM OF ONE DENSITY TEST SHALL BE TAKEN EVERY TWO HUNDRED (200) FEET FOR EACH EIGHT (8) INCH LOOSE LIFT OF SUBGRADE AND EACH OPEN CUT CROSSING. ADDITIONAL TESTS MAY BE REQUIRED AT THE ENGINEER'S DISCRETION. ALL DENSITY TESTS SHALL BE COMPLETED AND ACCEPTED ON EACH LAYER PRIOR TO ADDITIONAL BACKFILLING. A COPY OF ALL COMPLETED AND ACCEPTED DENSITY TESTS SHALL BE FURNISHED TO THE OWNER.
5. CONTRACTOR OR ENGINEER MAY REQUEST FOR USE OF ALTERNATE BACKFILL MATERIAL. ALTERNATE MATERIALS AND TESTING PROTOCOL MUST BE SUBMITTED TO AND APPROVED BY THE CITY ENGINEER PRIOR TO USE.
6. ALL COMMUNICATION CONDUIT TO INCLUDE A 1500 LB CONTINUOUS MULE TAPE IN PLACE BETWEEN PULL BOXES.
7. ALL INSTALLED CONDUITS MUST PASS A PULL TEST WITH A FULL SIZED MANDREL.
8. FILTER FABRIC ALONG THE TRENCH IS REQUIRED WHEN GROUNDWATER IS PRESENT
9. CONTRACTOR HAS THE OPTION, AT CONTRACTOR'S COST, TO PLACE BEDDING MATERIAL UP TO 6" FROM FINISHED GRADE.

SCALE: NOT TO SCALE

The City of LagoVista, Texas

CITY OF LAGO VISTA
5803 THUNDERBIRD
LAGO VISTA, TX 78645
PH: (512) 267-1155

These documents were prepared by, or under the supervision of:
ERIC BELAJ 107148 February 3, 2019
Engineer's Name PE# Date
Engineer's Signature

SECTION **WATER**
DETAIL NO. WT-3
TITLE EMBEDMENT UNDER EXISTING PAVEMENT

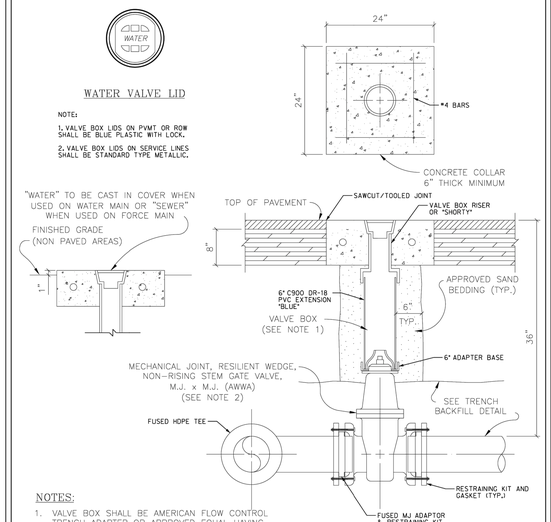

NOTES:

1. VALVE BOX SHALL BE AMERICAN FLOW CONTROL TRENCH ADAPTER OR APPROVED EQUAL HAVING AN ADJUSTABLE RANGE OF + OR – 6 INCHES FROM INSTALLED FINISH GRADE.
2. ACCEPTABLE GATE VALVES ARE:
   A. AMERICAN FLOW CONTROL – SERIES 2550
   B. MUELLER – 2360 SERIES
   C. EAST JORDAN

SCALE: NOT TO SCALE

The City of LagoVista, Texas

CITY OF LAGO VISTA
5803 THUNDERBIRD
LAGO VISTA, TX 78645
PH: (512) 267-1155

These documents were prepared by, or under the supervision of:
ERIC BELAJ 107148 February 3, 2019
Engineer's Name PE# Date
Engineer's Signature

SECTION **WATER**
DETAIL NO. WT-17
TITLE WATER VALVE

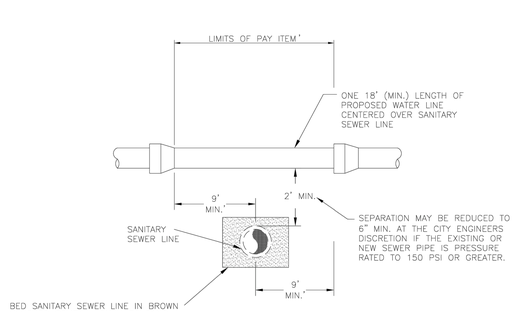

NOTES:

1. PIPE CENTERED WITH 2' SEPARATION, CENTER CROSSING OVER SEGMENT OF WASTE WATER LINE WHEN POSSIBLE. IF EXISTING WASTE WATER MAIN IS DISTURBED OR SHOW SIGNS OF LEAKAGE NOTIFY ENGINEER IMMEDIATELY.

* ALL CROSSINGS SHALL COMPLY WITH CURRENT TCEQ REQUIREMENTS AND IN ACCORDANCE WITH AWWA AND/OR ASTM STANDARDS.

SCALE: NOT TO SCALE

The City of LagoVista, Texas

CITY OF LAGO VISTA
5803 THUNDERBIRD
LAGO VISTA, TX 78645
PH: (512) 267-1155

These documents were prepared by, or under the supervision of:
ERIC BELAJ 107148 February 3, 2019
Engineer's Name PE# Date
Engineer's Signature

SECTION **WATER**
DETAIL NO. WT-33
TITLE WASTEWATER LINE UNDER WATER MAIN CROSSING

Freese and Nichols, Inc.
Texas Registered Engineering Firm F-2144

NOT FOR CONSTRUCTION
THIS DOCUMENT IS RELEASED FOR THE PURPOSE OF INTERIM REVIEW UNDER THE AUTHORITY OF MARK WILSON P.E. TEXAS NO: 103447 ON DATE 03/21/2025 IT IS NOT TO BE USED FOR CONSTRUCTION, BIDDING OR PERMIT PURPOSES.

FREESE NICHOLS
10431 Morado Circle, Suite 300
Austin, Texas 78759
Phone - (512) 617-3100
Web - www.freese.com

CITY OF LAGO VISTA
EFFLUENT POND #14 LINER REPLACEMENT AND PRESSURIZED PIPELINE TO POND #2
STANDARD DETAILS

STANDARD DETAILS I

NO.	ISSUE	BY	DATE

F&N JOB NO. LGV23021
DATE 3/21/2025
DESIGNED BET
DRAWN SRL
CHECKED JJG
APPROVED HGO
FILE NAME

VERIFY SCALE Bar is one inch on original drawing. If not one inch on this sheet adjust scale.
0 1"

SHEET DT-1
SEQ. 30 OF 31

65% SUBMITTAL

ACAD Rel: 25.0s (LMS Tech)
Filename: N:\WTU\Drawings\CV-DTL-MISC01.dwg
Last Saved: 3/20/2025 4:30 PM Saved By: 02568

Plot Date: 3/21/2025 3:31 PM Plot By: 08354 Filename: N:\WTU\Drawings\CV-DTL-MISC01.dwg

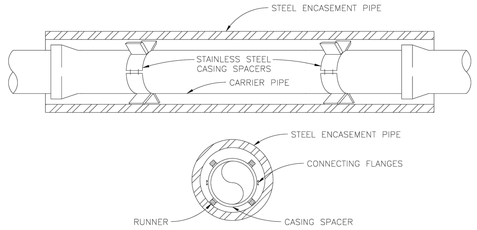

NOTES:

1. CASING SPACERS SHALL BE BOLT ON STYLE WITH A SHELL MADE IN TWO SECTIONS OF HEAVY T-304 STAINLESS STEEL. CONNECTING FLANGES SHALL BE RIBBED FOR EXTRA STRENGTH. SEE SPECIFICATIONS FOR APPROVED CASING SPACERS.
2. CASING SPACERS SHALL HAVE RUNNERS MADE OF ULTRA HIGH MOLECULAR WEIGHT POLYMER, WITH A MINIMUM HEIGHT OF 2 INCHES.
3. DO NOT USE WEDGES BETWEEN TOP OF CARRIER PIPE AND INSIDE OF CASING TO KEEP PIPE FROM MOVING.
4. PRIOR TO INSERTING CARRIER PIPE, ANY WATER SHOULD BE PUMPED OUT OF THE CASING PIPE SO THAT NO MORE THAN A FEW INCHES OF WATER REMAINS.
5. SPACERS WILL BE REQUIRED WITHIN AT LEAST 3 FEET FROM BOTH OPENINGS OF THE ENCASEMENT PIPE AND SPACED NO GREATER THAN 1' SPACING FOR HDPE CARRIER PIPE, AND 6 FEET SPACING THROUGHOUT THE ENCASEMENT PIPEFOR ALL OTHER PIPE MATERIAL. IN ADDITION, SPACERS SHALL BE REQUIRED WITHIN 2 FEET OF ALL PIPE JOINTS.
6. ENCASEMENT PIPE SHALL BE SMOOTH STEEL 35,000 PSI YIELD STRENGTH WITH THICKNESS ACCORDING TO THE FOLLOWING TABLE:

PIPE SIZE–CARRIER (DIAMETER)	PIPE SIZE–CASING (DIAMETER)(MIN.)	MINIMUM PIPE THICKNESS (INCHES)	
4"	12"	1/4	0.2500
6"	16"	1/4	0.2500
8"	18"	5/16	0.3125
10"	20"	3/8	0.3750
12" – 14"	24"	7/16	0.4375
16" – 18"	30"	1/2	0.5000
20"	36"	1/2	0.5000
24"	42"	1/2	0.5000
30"	48"		

SCALE: NOT TO SCALE

The City of LagoVista, Texas

CITY OF LAGO VISTA
5803 THUNDERBIRD
LAGO VISTA, TX 78645
PH: (512) 267-1155

These documents were prepared by, or under the supervision of:
ERIC BELAJ 107148 February 3, 2019
Engineer's Name PE# Date
Engineer's Signature

SECTION: WASTEWATER
DETAIL NO.: WW-32
TITLE: PIPE CASING

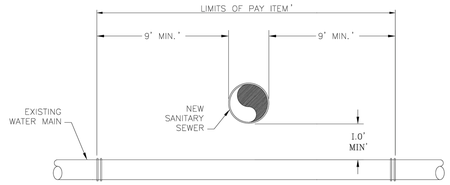

** NOTE:

1. SEWER PIPE SHALL BE HDPE DR-11 21 W/ PRESSURE RATING OF 200 PSI WITH BUTT FUSED JOINTS.
2. 1' MIN. SEPARATION, SEPERATE JOINTS AS FAR AS POSSIBLE FROM CROSSING.
3. CENTER ONE 18' MIN. JOINT OF SEWER LINE OVER CROSSING.
4. ALL CROSSINGS SHALL COMPLY WITH CURRENT TCEQ REQUIREMENTS AND IN ACCORDANCE W/AWWA & ASTM STANDARDS.
5. WHEN POSSIBLE, ALL SEWER LINES SHALL BE ROUTED BELOW WATER LINES.

SCALE: NOT TO SCALE

The City of LagoVista, Texas

CITY OF LAGO VISTA
5803 THUNDERBIRD
LAGO VISTA, TX 78645
PH: (512) 267-1155

These documents were prepared by, or under the supervision of:
ERIC BELAJ 107148 February 3, 2019
Engineer's Name PE# Date
Engineer's Signature

SECTION: WASTEWATER
DETAIL NO.: WW-35
TITLE: PROPOSED WW OVER WATER MAIN CROSSING

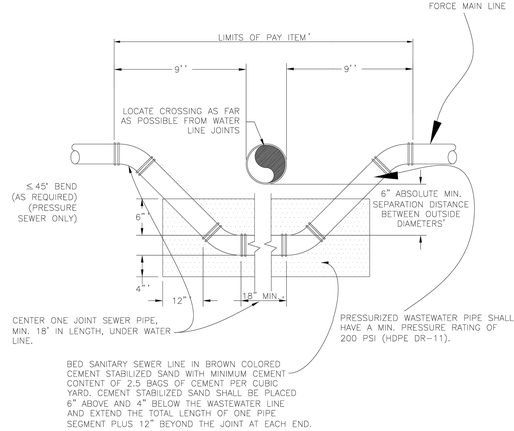

* ALL CROSSINGS SHALL COMPLY WITH CURRENT TCEQ REQUIREMENTS AND IN ACCORDANCE WITH AWWA AND/OR ASTM STANDARDS.

SCALE: NOT TO SCALE

The City of LagoVista, Texas

CITY OF LAGO VISTA
5803 THUNDERBIRD
LAGO VISTA, TX 78645
PH: (512) 267-1155

These documents were prepared by, or under the supervision of:
ERIC BELAJ 107148 February 3, 2019
Engineer's Name PE# Date
Engineer's Signature

SECTION: WASTEWATER
DETAIL NO.: WW-36
TITLE: PROPOSED FM UNDER WATER MAIN CROSSING

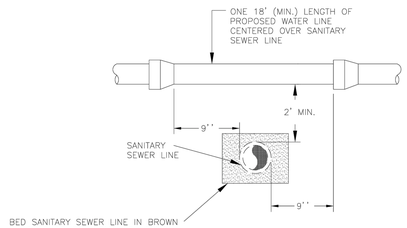

*ALL CROSSINGS SHALL COMPLY WITH CURRENT TCEQ REQUIREMENTS.

SCALE: NOT TO SCALE

The City of LagoVista, Texas

CITY OF LAGO VISTA
5803 THUNDERBIRD
LAGO VISTA, TX 78645
PH: (512) 267-1155

These documents were prepared by, or under the supervision of:
ERIC BELAJ 107148 February 3, 2019
Engineer's Name PE# Date
Engineer's Signature

SECTION: WASTEWATER
DETAIL NO.: WW-43
TITLE: PROPOSED WW LINE UNDER PROPOSED WATER

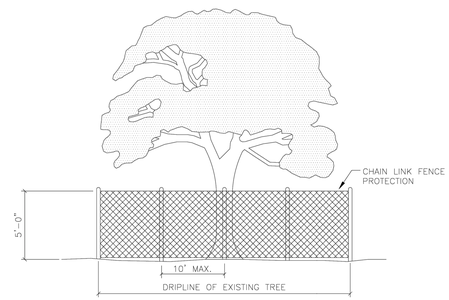

TREE PROTECTION NOTES:

1. TREE PROTECTION FENCES SHALL BE INSTALLED PRIOR TO THE COMMENCEMENT OF ANY SITE PREPARATION WORK (CLEARING, GRUBBING OR GRADING).
2. FENCES SHALL COMPLETELY SURROUND THE TREE, OR CLUSTERS OF TREES; WILL BE LOCATED AT THE OUTERMOST LIMIT OF THE TREE BRANCHES (DRIPLINE), AND WILL BE MAINTAINED THROUGHOUT THE CONSTRUCTION PROJECT IN ORDER TO PREVENT THE FOLLOWING:
   A. SOIL COMPACTION IN THE ROOT ZONE AREA RESULTING FROM VEHICULAR TRAFFIC, OR STORAGE OF EQUIPMENT OR MATERIALS.
   B. ROOT ZONE DISTURBANCES DUE TO GRADE CHANGES (GREATER THAN SIX INCHES (6") CUT OR FILL, OR TRENCHING NOT REVIEWED AND AUTHORIZED BY THE CITY.
   C. WOUNDS TO EXPOSED ROOTS, TRUNKS OR LIMBS BY MECHANICAL EQUIPMENT.
   D. OTHER ACTIVITIES DETRIMENTAL TO TREES, SUCH AS CHEMICAL STORAGE, CEMENT TRUCK CLEANING AND FIRE.
3. EXCEPTIONS TO INSTALLING FENCES AT TREE DRIPLINES MAY BE PERMITTED IN THE FOLLOWING CASES:
   A. WHERE PERMEABLE PAVING IS TO BE INSTALLED, ERECT THE FENCE AT THE OUTER LIMITS OF THE PERMEABLE PAVING AREA.
   B. WHERE TREES ARE CLOSE TO PROPOSED BUILDINGS, ERECT THE FENCE NO CLOSER THAN SIX FEET (6'-0") TO BUILDING.

SCALE: NOT TO SCALE

The City of LagoVista, Texas

CITY OF LAGO VISTA
5803 THUNDERBIRD
LAGO VISTA, TX 78645
PH: (512) 267-1155

These documents were prepared by, or under the supervision of:
ERIC BELAJ 107148 February 3, 2019
Engineer's Name PE# Date
Engineer's Signature

SECTION: EROSION CONTROL
DETAIL NO.: TP-1
TITLE: TREE PROTECTION CHAIN LINK FENCE

Freese and Nichols, Inc.
Texas Registered Engineering Firm F-2144

NOT FOR CONSTRUCTION
THIS DOCUMENT IS RELEASED FOR THE PURPOSE OF INTERIM REVIEW UNDER THE AUTHORITY OF AMBER LEE WOOLF, P.E. TEXAS NO: 103447 ON DATE: 03/21/2025 IT IS NOT TO BE USED FOR CONSTRUCTION, BIDDING OR PERMIT PURPOSES.

FREESE NICHOLS
10431 Morado Circle, Suite 300
Austin, Texas 78759
Phone - (512) 617-3100
Web - www.freese.com

CITY OF LAGO VISTA
EFLLUENT POND #14 LINER REPLACEMENT AND PRESSURIZED PIPELINE TO POND #2
STANDARD DETAILS

STANDARD DETAILS II

NO.	ISSUE	BY	DATE

F&N JOB NO. LGV23021
DATE 3/21/2025
DESIGNED BET
DRAWN SRL
CHECKED JJG
APPROVED HGO
FILE NAME

VERIFY SCALE Bar is one inch on original drawing. If not one inch on this sheet, adjust scale. 0 1"

SHEET DT-2
SEQ. 31 OF 31

65% SUBMITTAL

ACAD Rel: 25.0s (LMS Tech)
Filename: N:\WTU\Drawings\CV-DTL-MISC01.dwg
Last Saved: 3/20/2025 4:30 PM Saved By: 02568

Plot Date: 3/21/2025 3:32 PM Plot By: 08354 Filename: N:\WTU\Drawings\CV-DTL-MISC01.dwg

Attachment O

Liner Certification for Cedar Breaks Pond

GSE

Shipping Order - Packing List - Original - Not Negotiable

GSE Lining Technology, Inc. at HOUSTON, TEXAS

Shippers No. 47811

Received at Houston, Texas from GSE Lining Technology, Inc. the property described below, in apparent good order, except as noted (contents and condition of packages unknown), marked, consigned, and destined as indicated below, which said Carrier agrees to carry to the place of delivery at said destination. It is mutually agreed as to each Carrier of all or any said property, over all or any portion of said route to destination, and as to each party at any time interested in all or any of said property, that every service performed hereunder shall be subject to the rates and contract agreed to in writing by GSE Lining Technology and Carrier. GSE Lining Technology's obligation to pay freight charges for the shipment is conditioned on (1) the existence of a separate written contract with the carrier transporting the freight and (2) the carrier's name appearing on this Bill of Lading, and other carriers must look solely to a party other than GSE Lining Technology, Inc. for payment.

Ship To: Cedar Breaks Effluent Pond
C/O City of Lago Vista/In-Line Plas
1 mi. West of Lago Vista on
State Hwy 1431, site is on left sid
the rd, across from church
Lago Vista TX 78645

Roll Certifications Included

Date: 02/25/05

Branch Plant: 1500 621811

Shipping Instructions:
call Jennifer@281-272-1660 24 hrs before delivery

Sales Order
38199 SO

No. Line	Roll #	QTY Shipped	UM	Kind of Package, Description of Articles, Special Marks and Exceptions	Weight
1	101111793	19575	SF	HDE040A000 40 mil Avg GSE HD Blk, HD, Smooth, 22.5'	3,918.00
2	101111794	19575	SF	HDE040A000 40 mil Avg GSE HD Blk, HD, Smooth, 22.5'	3,916.00
3	101111795	19575	SF	HDE040A000 40 mil Avg GSE HD Blk, HD, Smooth, 22.5'	3,912.00
4	101111797	19575	SF	HDE040A000 40 mil Avg GSE HD Blk, HD, Smooth, 22.5'	3,914.00
5	101111798	19575	SF	HDE040A000 40 mil Avg GSE HD Blk, HD, Smooth, 22.5'	3,914.00
6	101111799	19575	SF	HDE040A000 40 mil Avg GSE HD Blk, HD, Smooth, 22.5'	3,914.00
7	101111800	19575	SF	HDE040A000 40 mil Avg GSE HD Blk, HD, Smooth, 22.5'	3,926.00
8	101111801	19575	SF	HDE040A000 40 mil Avg GSE HD Blk, HD, Smooth, 22.5'	3,920.00
9	101111802	19575	SF	HDE040A000 40 mil Avg GSE HD Blk, HD, Smooth, 22.5'	3,930.00
10	101111803	19575	SF	HDE040A000 40 mil Avg GSE HD Blk, HD, Smooth, 22.5'	3,960.00
11	101111804	19575	SF	HDE040A000 40 mil Avg GSE HD Blk, HD, Smooth, 22.5'	3,925.00

Total Quantity 215,325

Total Weight: 43,149.00

Project# 516618

Freight charges are prepaid unless marked collect.

Check box if collect ☐

Customer P.O. Number: 3344

If this shipment is to be delivered to consignor, consignor shall sign the following statement.

Carrier may decline to deliver this shipment without payment of freight and all other lawful charges.

Signature of Consignor

Local Verification Signed:

X

Pick Up # 7890RR

Seal #

Trucker's P.O. #

Driver Requirements:

1) Driver must pre call 24 hrs prior to delivery and on Friday for Monday delivery.
2) Driver must call (281) 230-6781 when unloaded.
3) Driver must call and advise any delay in transit.
4) A copy of this bill of lading must accompany Freight Invoice.

Carrier Name:

Carrier Signature:

Date:

Chevron Phillips

CoA Date: 01/11/2005

Certificate of Analysis

Shipped To: GSE LINING TECHNOLOGY INC HC
19103 GUNDLE ROAD
WESTFIELD TX 77090
USA

Recipient: DON BOHAC
Fax:

CPC Delivery #: 86801733
PO #: 60130
Weight: 186900 LB
Ship Date: 01/11/2005
Package: BULK
Mode: Hopper Car
Car #: PLCX042839
Seal No: 152494

Product:
MARLEX POLYETHYLENE K306 BULK

Lot Number: 8241697

Property	Test Method	Value	Unit
Melt Index	ASTM D1238	0.11	g/10ml
HLMI Flow Rate	ASTM D1238	13.2	g/10ml
Density	ASTM D1505	0.937	g/cm3
Production Date		11/18/2004	

The data set forth herein have been carefully compiled by Chevron Phillips Chemical Company LP. However, there is no warranty of any kind, either expressed or implied, applicable to its use, and the user assumes all risk and liability in connection therewith.

Jackie Edwards
Certification Systems Specialist

For CoA questions contact Peter Scheirman at 713-289-4799

GSE Lining Technology, Inc.

Roll Test Data Report

Roll No. 101111793

ROLL IDENTIFICATION

Roll Number	101111793	
Product Name	HDE040A000	
Production Date	1/26/2006	
Length ≈(+/- 1%)	870	feet
	265	meters
Width (Nominal)	22.5	feet
	6.9	meters
Sheet Area	19,575	sq. feet
	1,818	sq. meters
Weight	3,918	pounds
	1,777	kilograms

RESIN INFORMATION

Lot Number	8241697
Type	K306
Supplier	Chevron Phillips

GSE RESIN TEST DATA

Property	Test Method	Results
Density, g/cc	ASTM D 1505	0.937
Melt index, g/10 min.	ASTM D 1238 (190/2.16)	0.11

Physical Property	Test Method	Test Frequency	Customer Minimum English	Customer Minimum Metric	Test Results English	Test Results Metric
Thickness, mil (mm)	ASTM D 5199					
Average		every roll	40	(1.00)	41	(1.04)
Minimum		every roll	36	(0.90)	38	(0.96)
Tensile Properties:	ASTM D638,Type IV / D6693					
Yield Strength, ppi (N/cm) - TD		every 2nd	84	(147)	97	(170)
- MD		every 2nd	84	(147)	91	(159)
Break Strength, ppi (N/cm) - TD		every 2nd	152	(266)	216	(377)
- MD		every 2nd	152	(266)	211	(370)
Yield Elongation, % - TD	gauge length = 1.3"	every 2nd	12		16	
- MD	(33 mm)	every 2nd	12		19	
Break Elongation, % - TD	gauge length = 2.0"	every 2nd	700		902	
- MD	(51 mm)	every 2nd	700		798	
Tear Resistance, lb. (N)	ASTM D 1004					
- TD		every 2nd	28	(125)	31	(138)
- MD		every 2nd	28	(125)	34	(150)
Puncture Resistance, lb. (N)	ASTM D 4833	every 2nd	72	(320)	107	(476)
Density, g/cc	ASTM D 1505	every 2nd	0.940		0.943	
Carbon Black Content, %	ASTM D 1603*	every 2nd	2.0		2.6	
Carbon Black Dispersion	ASTM D 5596					
Views in Cat1 - Cat2		every 2nd	9		10	

Order No.	38199
Customer Name	In-Line Plastics
Project Name	In-Line Plastics P.O. 3344
Location	Austin, TX

*Modified

APPROVED v.g. 1/26/2006 QA

GSE Lining Technology, Inc.

Roll Test Data Report

Roll No. 101111794

ROLL IDENTIFICATION

Roll Number	101111794	
Product Name	HDE040A000	
Production Date	1/25/2005	
Length ≈(+/- 1%)	870 265	feet meters
Width (Nominal)	22.5 6.9	feet meters
Sheet Area	19,575 1,818	sq. feet sq. meters
Weight	3,916 1,776	pounds kilograms

RESIN INFORMATION

Lot Number	8241697
Type	K306
Supplier	Chevron Phillips

GSE RESIN TEST DATA

Property	*Test Method*	*Results*
Density, g/cc	*ASTM D 1505*	0.937
Melt index, g/10 min.	*ASTM D 1238 (190/2.16)*	0.11

Physical Property	*Test Method*	*Test Frequency*	*Customer Minimum* English	Metric	*Test Results* English	Metric
Thickness, mil (mm)	ASTM D 5199					
Average		every roll	40	(1.00)	41	(1.04)
Minimum		every roll	36	(0.90)	38	(0.95)
Tensile Properties:	ASTM D638,Type IV / D6693					
Yield Strength, ppi (N/cm) - TD		every 2nd	84	(147)	102	(179)
- MD		every 2nd	84	(147)	94	(165)
Break Strength, ppi (N/cm) - TD		every 2nd	152	(266)	221	(386)
- MD		every 2nd	152	(266)	213	(372)
Yield Elongation, % - TD	gauge length = 1.3"	every 2nd	12		16	
- MD	(33 mm)	every 2nd	12		19	
Break Elongation, % - TD	gauge length = 2.0"	every 2nd	700		896	
- MD	(51 mm)	every 2nd	700		787	
Tear Resistance, lb. (N)	ASTM D 1004					
- TD		every 2nd	28	(125)	30	(133)
- MD		every 2nd	28	(125)	34	(151)
Puncture Resistance, lb. (N)	ASTM D 4833					
		every 2nd	72	(320)	105	(467)
Density, g/cc	ASTM D 1505					
		every 2nd	0.940		0.942	
Carbon Black Content, %	ASTM D 1603*					
		every 2nd	2.0		2.7	
Carbon Black Dispersion	ASTM D 5596					
Views In Cat1 - Cat2		every 2nd	9		10	

Order No.	58199
Customer Name	In-Line Plastics
Project Name	In-Line Plastics P.O. 3344
Location	Austin, TX
Modified	

APPROVED D.G. 1/25/2005 QA

GSE Lining Technology, Inc.

Roll Test Data Report

Roll No. 101111795

ROLL IDENTIFICATION

Roll Number	101111795	
Product Name	HDE040A000	
Production Date	1/25/2005	
Length ≈(+/- 1%)	870	feet
	265	meters
Width (Nominal)	22.6	feet
	6.9	meters
Sheet Area	19,675	sq. feet
	1,818	sq. meters
Weight	3,912	pounds
	1,774	kilograms

RESIN INFORMATION

Lot Number	6241097
Type	K306
Supplier	Chevron Phillips

GSE RESIN TEST DATA

Property	Test Method	Results
Density, g/cc	ASTM D 1505	0.937
Melt index, g/10 min.	ASTM D 1238 (190/2.16)	0.11

Physical Property	Test Method	Test Frequency	Customer Minimum English	Customer Minimum Metric	Test Results English	Test Results Metric
Thickness, mil (mm)	ASTM D 5199					
Average		every roll	40	(1.00)	41	(1.04)
Minimum		every roll	36	(0.90)	38	(0.97)
Tensile Properties:	ASTM D638,Type IV / D6693					
Yield Strength, ppi (N/cm) - TD		every 2nd	84	(147)	102	(179)
- MD		every 2nd	84	(147)	94	(165)
Break Strength, ppi (N/cm) - TD		every 2nd	152	(266)	221	(386)
- MD		every 2nd	152	(266)	213	(372)
Yield Elongation, % - TD	gauge length = 1.3"	every 2nd	12		16	
- MD	(33 mm)	every 2nd	12		19	
Break Elongation, % - TD	gauge length = 2.0"	every 2nd	700		896	
- MD	(51 mm)	every 2nd	700		787	
Tear Resistance, lb. (N)	ASTM D 1004					
- TD		every 2nd	26	(125)	30	(133)
- MD		every 2nd	28	(125)	34	(151)
Puncture Resistance, lb. (N)	ASTM D 4833	every 2nd	72	(320)	105	(467)
Density, g/cc	ASTM D 1505	every 2nd	0.940		0.942	
Carbon Black Content, %	ASTM D 1603*	every 2nd	2.0		2.7	
Carbon Black Dispersion	ASTM D 5596					
Views In Cat1 - Cat2		every 2nd	9		10	

Order No.	38199
Customer Name	In-Line Plastics
Project Name	In-Line Plastics P.O. 3344
Location	Austin, TX

*Modified

APPROVED D.G. 1/25/2005 QA

GSE Lining Technology, Inc.

Roll Test Data Report

Roll No. 101111797

ROLL IDENTIFICATION

Roll Number	101111797	
Product Name	HDE040A000	
Production Date	1/25/2005	
Length ≈(+/- 1%)	870	feet
	265	meters
Width (Nominal)	22.5	feet
	6.9	meters
Sheet Area	19,575	sq. feet
	1,818	sq. meters
Weight	3,914	pounds
	1,775	kilograms

RESIN INFORMATION

Lot Number	8241697
Type	K306
Supplier	Chevron Phillips

GSE RESIN TEST DATA

Property	Test Method	Results
Density, g/cc	ASTM D 1505	0.937
Melt index, g/10 min.	ASTM D 1238 (190/2.16)	0.11

Physical Property	Test Method	Test Frequency	Customer Minimum English	Customer Minimum Metric	Test Results English	Test Results Metric
Thickness, mil (mm)	ASTM D 5199					
Average		every roll	40	(1.00)	41	(1.04)
Minimum		every roll	36	(0.90)	38	(0.97)
Tensile Properties:	ASTM D638,Type IV / D6693					
Yield Strength, ppi (N/cm) - TD		every 2nd	84	(147)	103	(180)
- MD		every 2nd	84	(147)	96	(169)
Break Strength, ppi (N/cm) - TD		every 2nd	152	(266)	222	(388)
- MD		every 2nd	152	(266)	217	(380)
Yield Elongation, % - TD	gauge length = 1.3"	every 2nd	12		16	
- MD	(33 mm)	every 2nd	12		19	
Break Elongation, % - TD	gauge length = 2.0"	every 2nd	700		912	
- MD	(51 mm)	every 2nd	700		822	
Tear Resistance, lb. (N)	ASTM D 1004					
- TD		every 2nd	28	(125)	31	(140)
- MD		every 2nd	28	(125)	34	(152)
Puncture Resistance, lb. (N)	ASTM D 4833	every 2nd	72	(320)	109	(485)
Density, g/cc	ASTM D 1505	every 2nd	0.940		0.942	
Carbon Black Content, %	ASTM D 1603*	every 2nd	2.0		2.6	
Carbon Black Dispersion	ASTM D 5596					
Views in Cat1 - Cat2		every 2nd	9		10	

Order No.	38199
Customer Name	In-Line Plastics
Project Name	In-Line Plastics P.O. 3344
Location	Austin, TX

APPROVED
D.G.
1/26/2005
QA

*Modified

GSE Lining Technology, Inc.

Roll Test Data Report

Roll No. 101111798

ROLL IDENTIFICATION

Roll Number	101111798
Product Name	HDE040A000
Production Date	1/25/2005

Length ≈(+/- 1%)	870 265	feet meters
Width (Nominal)	22.5 6.9	feet meters
Sheet Area	19,575 1,818	sq. feet sq. meters
Weight	3,914 1,775	pounds kilograms

RESIN INFORMATION

Lot Number	8241697
Type	K306
Supplier	Chevron Phillips

GSE RESIN TEST DATA

Property	Test Method	Results
Density, g/cc	ASTM D 1505	0.937
Melt index, g/10 min.	ASTM D 1238 (190/2.16)	0.11

Physical Property	Test Method	Test Frequency	Customer Minimum English	Customer Minimum Metric	Test Results English	Test Results Metric
Thickness, mil (mm)	ASTM D 5199					
Average		every roll	40	(1.00)	41	(1.03)
Minimum		every roll	36	(0.90)	38	(0.97)
Tensile Properties:	ASTM D638,Type IV / D6693					
Yield Strength, ppi (N/cm) - TD		every 2nd	84	(147)	100	(174)
- MD		every 2nd	84	(147)	93	(162)
Break Strength, ppi (N/cm) - TD		every 2nd	152	(266)	221	(386)
- MD		every 2nd	152	(266)	206	(360)
Yield Elongation, % - TD	gauge length = 1.3"	every 2nd	12		17	
- MD	(33 mm)	every 2nd	12		19	
Break Elongation, % - TD	gauge length = 2.0"	every 2nd	700		923	
- MD	(51 mm)	every 2nd	700		760	
Tear Resistance, lb. (N)	ASTM D 1004					
- TD		every 2nd	28	(125)	31	(138)
- MD		every 2nd	28	(125)	33	(147)
Puncture Resistance, lb. (N)	ASTM D 4833	every 2nd	72	(320)	103	(458)
Density, g/cc	ASTM D 1505	every 2nd	0.940		0.942	
Carbon Black Content, %	ASTM D 1603*	every 2nd	2.0		2.6	
Carbon Black Dispersion	ASTM D 5596					
Views in Cat1 - Cat2		every 2nd	9		10	

Order No.	38199
Customer Name	In-Line Plastics
Project Name	In-Line Plastics P.O. 3344
Location	Austin, TX

*Modified

APPROVED D.G. 1/25/2005 QA

GSE Lining Technology, Inc.

Roll Test Data Report

Roll No. 101111799

ROLL IDENTIFICATION

Roll Number	101111799	
Product Name	HDE040A000	
Production Date	1/25/2006	
Length ≈(+/- 1%)	870	feet
	265	meters
Width (Nominal)	22.5	feet
	6.9	meters
Sheet Area	19,575	sq. feet
	1,818	sq. meters
Weight	3,914	pounds
	1,775	kilograms

RESIN INFORMATION

Lot Number	8241697
Type	K306
Supplier	Chevron Phillips

GSE RESIN TEST DATA

Property	Test Method	Results
Density, g/cc	ASTM D 1505	0.937
Melt Index, g/10 min.	ASTM D 1238 (190/2.16)	0.11

Physical Property	Test Method	Test Frequency	Customer Minimum English	Customer Minimum Metric	Test Results English	Test Results Metric
Thickness, mil (mm):	ASTM D 5199					
Average		every roll	40	(1.00)	41	(1.05)
Minimum		every roll	36	(0.90)	38	(0.97)
Tensile Properties:	ASTM D638,Type IV / D6693					
Yield Strength, ppi (N/cm) - TD		every 2nd	84	(147)	100	(174)
- MD		every 2nd	84	(147)	93	(162)
Break Strength, ppi (N/cm) - TD		every 2nd	152	(266)	221	(386)
- MD		every 2nd	152	(266)	206	(360)
Yield Elongation, % - TD	gauge length = 1.3"	every 2nd	12		17	
- MD	(33 mm)	every 2nd	12		19	
Break Elongation, % - TD	gauge length = 2.0"	every 2nd	700		923	
- MD	(51 mm)	every 2nd	700		790	
Tear Resistance, lb. (N)	ASTM D 1004					
- TD		every 2nd	28	(126)	31	(138)
- MD		every 2nd	28	(125)	33	(147)
Puncture Resistance, lb. (N)	ASTM D 4833	every 2nd	72	(320)	103	(458)
Density, g/cc	ASTM D 1505	every 2nd	0.940		0.942	
Carbon Black Content, %	ASTM D 1603*	every 2nd	2.0		2.6	
Carbon Black Dispersion	ASTM D 5596					
Views in Cat1 - Cat2		every 2nd	9		10	

Order No.	38199
Customer Name	In-Line Plastics
Project Name	In-Line Plastics P.O. 3344
Location	Austin, TX

*Modified

APPROVED D.G. 1/25/2005 QA

GSE Lining Technology, Inc.

Roll Test Data Report

Roll No, 101111800

ROLL IDENTIFICATION

Roll Number	101111800
Product Name	HDE040A000
Production Date	1/26/2005
Length ≈(+/- 1%)	870 feet / 265 meters
Width (Nominal)	22.5 feet / 6.9 meters
Sheet Area	19,575 sq. feet / 1,818 sq. meters
Weight	3,926 pounds / 1,781 kilograms

RESIN INFORMATION

Lot Number	8241697
Type	K306
Supplier	Chevron Phillips

GSE RESIN TEST DATA

Property	Test Method	Results
Density, g/cc	ASTM D 1505	0.937
Melt index, g/10 min.	ASTM D 1238 (190/2.16)	0.11

Physical Property	Test Method	Test Frequency	Customer Minimum English	Customer Minimum Metric	Test Results English	Test Results Metric
Thickness, mil (mm)	ASTM D 5199					
Average		every roll	40	(1.00)	42	(1.06)
Minimum		every roll	36	(0.90)	39	(0.98)
Tensile Properties:	ASTM D638,Type IV / D6693					
Yield Strength, ppi (N/cm) - TD		every 2nd	84	(147)	102	(179)
- MD		every 2nd	84	(147)	90	(158)
Break Strength, ppi (N/cm) - TD		every 2nd	152	(266)	182	(319)
- MD		every 2nd	152	(266)	195	(341)
Yield Elongation, % - TD	gauge length = 1.3"	every 2nd	12		16	
- MD	(33 mm)	every 2nd	12		22	
Break Elongation, % - TD	gauge length = 2.0"	every 2nd	700		792	
- MD	(51 mm)	every 2nd	700		778	
Tear Resistance, lb (N)	ASTM D 1004					
- TD		every 2nd	28	(125)	31	(139)
- MD		every 2nd	28	(125)	33	(147)
Puncture Resistance, lb. (N)	ASTM D 4833	every 2nd	72	(320)	101	(451)
Density, g/cc	ASTM D 1505	every 2nd	0.940		0.942	
Carbon Black Content, %	ASTM D 1603*	every 2nd	2.0		2.5	
Carbon Black Dispersion	ASTM D 5596					
Views in Cat1 - Cat2		every 2nd	9		10	

Order No.	38199
Customer Name	In-Line Plastics
Project Name	In-Line Plastics P.O. 3344
Location	Austin, TX

*Modified

APPROVED K.A. 1/25/2005 QA

GSE Lining Technology, Inc.

Roll Test Data Report

Roll No. 101111801

ROLL IDENTIFICATION

Roll Number	101111801
Product Name	HDE040A000
Production Date	1/25/2005

Length ≈(+/- 1%)	870 265	feet meters
Width (Nominal)	22.5 6.9	feet meters
Sheet Area	19,575 1,818	sq. feet sq. meters
Weight	3,920 1,778	pounds kilograms

RESIN INFORMATION

Lot Number	8241697
Type	K306
Supplier	Chevron Phillips

GSE RESIN TEST DATA

Property	Test Method	Results
Density, g/cc	ASTM D 1505	0.937
Melt index, g/10 min.	ASTM D 1238 (190/2.16)	0.11

Physical Property	Test Method	Test Frequency	Customer Minimum English	Customer Minimum Metric	Test Results English	Test Results Metric
Thickness, mil (mm)	ASTM D 5199					
Average		every roll	40	(1.00)	42	(1.06)
Minimum		every roll	36	(0.90)	39	(0.98)
Tensile Properties:	ASTM D638,Type IV / D6693					
Yield Strength, ppi (N/cm) - TD		every 2nd	84	(147)	102	(179)
- MD		every 2nd	84	(147)	90	(158)
Break Strength, ppi (N/cm) - TD		every 2nd	152	(266)	182	(319)
- MD		every 2nd	152	(266)	195	(341)
Yield Elongation, % - TD	gauge length = 1.3"	every 2nd	12		16	
- MD	(33 mm)	every 2nd	12		22	
Break Elongation, % - TD	gauge length = 2.0"	every 2nd	700		792	
- MD	(51 mm)	every 2nd	700		778	
Tear Resistance, lb. (N)	ASTM D 1004					
- TD		every 2nd	28	(125)	31	(139)
- MD		every 2nd	28	(125)	33	(147)
Puncture Resistance, lb. (N)	ASTM D 4833	every 2nd	72	(320)	101	(451)
Density, g/cc	ASTM D 1505	every 2nd	0.940		0.942	
Carbon Black Content, %	ASTM D 1603*	every 2nd	2.0		2.5	
Carbon Black Dispersion	ASTM D 5596					
Views In Cat1 - Cat2		every 2nd	9		10	

Order No.	38199
Customer Name	In-Line Plastics
Project Name	In-Line Plastics P.O. 3344
Location	Austin, TX

*Modified

APPROVED Z.A. 1/25/2005 QA

GSE Lining Technology, Inc.

Roll Test Data Report

Roll No. 101111802

ROLL IDENTIFICATION

Roll Number	101111802	
Product Name	HDE040A000	
Production Date	1/26/2005	
Length ≈(+/- 1%)	870	feet
	266	meters
Width (Nominal)	22.5	feet
	6.9	meters
Sheet Area	19,575	sq. feet
	1,818	sq. meters
Weight	3,930	pounds
	1,783	kilograms

RESIN INFORMATION

Lot Number	8241697
Type	K306
Supplier	Chevron Phillips

GSE RESIN TEST DATA

Property	Test Method	Results
Density, g/cc	ASTM D 1505	0.937
Melt index, g/10 min.	ASTM D 1238 (190/2.16)	0.11

Physical Property	Test Method	Test Frequency	Customer Minimum English	Customer Minimum Metric	Test Results English	Test Results Metric
Thickness, mil (mm).	ASTM D 5199					
Average		every roll	40	(1.00)	42	(1.06)
Minimum		every roll	36	(0.90)	38	(0.97)
Tensile Properties:	ASTM D638,Type IV / D6693					
Yield Strength, ppi (N/cm) - TD		every 2nd	84	(147)	117	(204)
- MD		every 2nd	84	(147)	94	(165)
Break Strength, ppi (N/cm) - TD		every 2nd	152	(266)	196	(342)
- MD		every 2nd	152	(266)	198	(347)
Yield Elongation, % - TD	gauge length = 1.3"	every 2nd	12		22	
- MD	(33 mm)	every 2nd	12		16	
Break Elongation, % - TD	gauge length = 2.0"	every 2nd	700		862	
- MD	(51 mm)	every 2nd	700		746	
Tear Resistance, lb. (N)	ASTM D 1004					
- TD		every 2nd	28	(125)	29	(131)
- MD		every 2nd	28	(125)	32	(146)
Puncture Resistance, lb. (N)	ASTM D 4833	every 2nd	72	(320)	104	(465)
Density, g/cc	ASTM D 1505	every 2nd	0.940		0.943	
Carbon Black Content, %	ASTM D 1603*	every 2nd	2.0		2.7	
Carbon Black Dispersion	ASTM D 5596					
Views in Cat1 - Cat2		every 2nd	9		10	

Order No.	38199
Customer Name	In-Line Plastics
Project Name	In-Line Plastics P.O. 3344
Location	Austin, TX
*Modified	

APPROVED K.K. 1/26/2005 QA

GSE Lining Technology, Inc.

Roll Test Data Report

Roll No. 101111803

ROLL IDENTIFICATION

Roll Number	101111803
Product Name	HDE040A000
Production Date	1/26/2005

Length ≈(+/- 1%)	870 265	feet meters
Width (Nominal)	22.5 6.9	feet meters
Sheet Area	19,575 1,818	sq. feet sq. meters
Weight	3,960 1,796	pounds kilograms

RESIN INFORMATION

Lot Number	8241697
Type	K308
Supplier	Chevron Phillips

GSE RESIN TEST DATA

Property	Test Method	Results
Density, g/cc	ASTM D 1505	0.937
Melt index, g/10 min.	ASTM D 1238 (190/2.16)	0.11

Physical Property	Test Method	Test Frequency	Customer Minimum English	Customer Minimum Metric	Test Results English	Test Results Metric
Thickness, mil (mm)	ASTM D 5199					
Average		every roll	40	(1.00)	42	(1.05)
Minimum		every roll	36	(0.90)	38	(0.97)
Tensile Properties:	ASTM D638,Type IV / D6693					
Yield Strength, ppi (N/cm) - TD		every 2nd	84	(147)	117	(204)
- MD		every 2nd	84	(147)	94	(165)
Break Strength, ppi (N/cm) - TD		every 2nd	152	(266)	196	(342)
- MD		every 2nd	152	(266)	198	(347)
Yield Elongation, % - TD	gauge length = 1.3"	every 2nd	12		22	
- MD	(33 mm)	every 2nd	12		16	
Break Elongation, % - TD	gauge length = 2.0"	every 2nd	700		862	
- MD	(51 mm)	every 2nd	700		746	
Tear Resistance, lb. (N)	ASTM D 1004					
- TD		every 2nd	28	(125)	29	(131)
- MD		every 2nd	28	(125)	32	(145)
Puncture Resistance, lb. (N)	ASTM D 4833					
		every 2nd	72	(320)	104	(465)
Density, g/cc	ASTM D 1505					
		every 2nd	0.940		0.943	
Carbon Black Content, %	ASTM D 1603*					
		every 2nd	2.0		2.7	
Carbon Black Dispersion	ASTM D 5596					
Views In Cat1 - Cat2		every 2nd	9		10	

Order No.	38199
Customer Name	In-Line Plastics
Project Name	In-Line Plastics P.O. 8344
Location	Austin, TX

*Modified

APPROVED
K.A.
1/26/2005
QA

GSE Lining Technology, Inc.

Roll Test Data Report

Roll No. 101111804

ROLL IDENTIFICATION

Roll Number	101111804	
Product Name	HDE040A000	
Production Date	1/26/2005	
Length ≈(+/- 1%)	870	feet
	266	meters
Width (Nominal)	22.8	feet
	6.9	meters
Sheet Area	19,575	sq. feet
	1,818	sq. meters
Weight	3,925	pounds
	1,780	kilograms

RESIN INFORMATION

Lot Number	8241697
Type	K306
Supplier	Chevron Phillips

GSE RESIN TEST DATA

Property	Test Method	Results
Density, g/cc	ASTM D 1505	0.937
Melt index, g/10 min.	ASTM D 1238 (190/2.16)	0.11

Physical Property	Test Method	Test Frequency	Customer Minimum English	Customer Minimum Metric	Test Results English	Test Results Metric
Thickness, mil (mm)	ASTM D 5199					
Average		every roll	40	(1.00)	41	(1.05)
Minimum		every roll	36	(0.90)	38	(0.97)
Tensile Properties:	ASTM D638,Type IV / D6693					
Yield Strength, ppi (N/cm) - TD		every 2nd	84	(147)	104	(182)
- MD		every 2nd	84	(147)	93	(163)
Break Strength, ppi (N/cm) - TD		every 2nd	152	(266)	206	(361)
- MD		every 2nd	152	(266)	189	(331)
Yield Elongation, % - TD	gauge length = 1.3"	every 2nd	12		16	
- MD	(33 mm)	every 2nd	12		22	
Break Elongation, % - TD	gauge length = 2.0"	every 2nd	700		869	
- MD	(51 mm)	every 2nd	700		729	
Tear Resistance, lb. (N)	ASTM D 1004					
- TD		every 2nd	28	(125)	32	(143)
- MD		every 2nd	28	(125)	33	(146)
Puncture Resistance, lb. (N)	ASTM D 4833	every 2nd	72	(320)	103	(457)
Density, g/cc	ASTM D 1505	every 2nd	0.940		0.942	
Carbon Black Content, %	ASTM D 1603*	every 2nd	2.0		2.6	
Carbon Black Dispersion	ASTM D 5596					
Views in Cat1 - Cat2		every 2nd	9		10	

Order No.	38199
Customer Name	In-Line Plastics
Project Name	In-Line Plastics P.O. 3344
Location	Austin, TX

*Modified

APPROVED K.A. 1/26/2005 QA

GSE Lining Technology, Inc.

Roll Test Data Report

Roll No. 101111796

ROLL IDENTIFICATION

Roll Number	101111796
Product Name	HDE040A000
Production Date	1/25/2005

Length ≈(+/- 1%)	870 265	feet meters
Width (Nominal)	22.5 6.9	feet meters
Sheet Area	19,575 1,818	sq. feet sq. meters
Weight	3,914 1,775	pounds kilograms

RESIN INFORMATION

Lot Number	8241697
Type	K306
Supplier	Chevron Phillips

GSE RESIN TEST DATA

Property	Test Method	Results
Density, g/cc	ASTM D 1505	0.937
Melt Index, g/10 min.	ASTM D 1238 (190/2.16)	0.11

Physical Property	Test Method	Test Frequency	Customer Minimum English	Customer Minimum Metric	Test Results English	Test Results Metric
Thickness, mil (mm)	ASTM D 5199					
Average		every roll	40	(1.00)	41	(1.05)
Minimum		every roll	36	(0.90)	38	(0.96)
Tensile Properties:	ASTM D638,Type IV / D6693					
Yield Strength, ppi (N/cm) - TD		every 2nd	84	(147)	103	(180)
- MD		every 2nd	84	(147)	96	(169)
Break Strength, ppi (N/cm) - TD		every 2nd	152	(266)	222	(389)
- MD		every 2nd	152	(266)	217	(380)
Yield Elongation, % - TD	gauge length = 1.3"	every 2nd	12		16	
- MD	(33 mm)	every 2nd	12		19	
Break Elongation, % - TD	gauge length = 2.0"	every 2nd	700		912	
- MD	(51 mm)	every 2nd	700		822	
Tear Resistance, lb. (N)	ASTM D 1004					
- TD		every 2nd	28	(125)	31	(140)
- MD		every 2nd	28	(125)	34	(152)
Puncture Resistance, lb. (N)	ASTM D 4833	every 2nd	72	(320)	109	(486)
Density, g/cc	ASTM D 1505	every 2nd	0.940		0.942	
Carbon Black Content, %	ASTM D 1603*	every 2nd	2.0		2.6	
Carbon Black Dispersion	ASTM D 5596					
Views In Cat1 - Cat2		every 2nd	9		10	

Order No.	38199
Customer Name	In-Line Plastics
Project Name	In-Line Plastics P.O. 3344
Location	Austin, TX

*Modified

APPROVED
P.G.
1/25/2005
QA

Shipping Order - Packing List - Original - Not Negotiable

GSE Lining Technology, Inc. at HOUSTON, TEXAS

Shippers No. 47810

Page 1 of 1

Received at Houston, Texas from GSE Lining Technology, Inc. the property described below, in apparent good order, except as noted (contents and condition of packages unknown), marked, consigned, and destined as indicated below, which said Carrier agrees to carry to the place of delivery at said destination. It is mutually agreed as to each Carrier of all or any said property, over all or any portion of said route to destination, and as to each party at any time interested in all or any of said property, that every service performed hereunder shall be subject to the rates and contract agreed to in writing by GSE Lining Technology and Carrier. GSE Lining Technology's obligation to pay freight charges for the shipment is conditioned on (1) the existence of a separate written contract with the carrier transporting the freight and (2) the carrier's name appearing on this Bill of Lading, and other carriers must look solely to a party other than GSE Lining Technology, Inc. for payment.

Ship To: Cedar Breaks Effluent Pond
C/O City of Lago Vista/In-Line Plas
1 mi. West of Lago Vista on
State Hwy 1431, site is on left sid
the rd. across from church
Lago Vista TX 78645

Roll Certifications Included

Date: 02/25/05

Branch Plant: 1500 621811

Shipping Instructions:

call Jennifer@281-272-1660 24 hrs before delivery

Sales Order 38199 SO

No. Line	Roll #	QTY Shipped	UM	Kind of Package, Description of Articles, Special Marks and Exceptions	Weight
1	101111792	19575	SF	HDE040A000 40 mil Avg GSE HD Blk, HD, Smooth, 22.5'	3,930.00
2	101111796	19575	SF	HDE040A000 40 mil Avg GSE HD Blk, HD, Smooth, 22.5'	3,914.00

Project# 516618

Freight charges are prepaid unless marked collect.

Check box if collect ☐

Customer P.O. Number: 3344

If this shipment is to be delivered to consignor, consignor shall sign the following statement.

Carrier may decline to deliver this shipment without payment of freight and all other lawful charges.

Signature of Consignor

Local Verification Signed:

X

Pick Up # 7891RR

Seal #

Total Quantity 39,150

Total Weight: 7,844.00

Truckers P.O. # PO68196

Driver Requirements:

1) Driver must pre call 24 hrs prior to delivery and on Friday for Monday delivery.
2) Driver must call (281) 230-6781 when unloaded.
3) Driver must call and advise any delay in transit.
4) A copy of this bill of lading must accompany Freight Invoice.

Carrier Name: TBI

Carrier Signature:

Date:

Chevron Phillips Chemical Company LP

CoA Date: 03/11/2006

Certificate of Analysis

Shipped To: GSE LINING TECHNOLOGY INC HC
19103 GUNDLE ROAD
WESTFIELD TX 77090
USA

Recipient: DON BOHAC
Fax:

CPC Delivery #: 86801133
PO #: 80130
Weight: 188900 LB
Ship Date: 03/11/2006
Package: BULK
Mode: Hopper Car
Car #: PLCX042839
Seal No: 152494

Product:
MARLEX POLYETHYLENE K306 BULK

Lot Number: 8241697

Property	Test Method	Value	Unit
Melt Index	ASTM D1238	0.11	g/10ml
HLMI Flow Rate	ASTM D1238	13.2	g/10ml
Density	ASTM D1505	0.937	g/cm3
Production Date		11/18/2004	

The data set forth herein have been carefully compiled by Chevron Phillips Chemical Company LP. However, there is no warranty of any kind, either expressed or implied, applicable to its use, and the user assumes all risk and liability in connection therewith.

Jackie Edwards
Certification Systems Specialist

For CoA questions contact Peter Scheirman at 713-289-4799

GSE Lining Technology, Inc.

Roll Test Data Report

Roll No. 101111792

ROLL IDENTIFICATION

Roll Number	101111792	
Product Name	HDE040A000	
Production Date	1/25/2005	
Length ≈(+/- 1%)	870	feet
	265	meters
Width (Nominal)	22.5	feet
	6.9	meters
Sheet Area	19,575	sq. feet
	1,818	sq. meters
Weight	3,930	pounds
	1,783	kilograms

RESIN INFORMATION

Lot Number	8241697
Type	K306
Supplier	Chevron Phillips

GSE RESIN TEST DATA

Property	Test Method	Results
Density, g/cc	ASTM D 1505	0.937
Melt index, g/10 min.	ASTM D 1238 (190/2.16)	0.11

Physical Property	Test Method	Test Frequency	Customer Minimum English	Customer Minimum Metric	Test Results English	Test Results Metric
Thickness, mil (mm)	ASTM D 5199					
Average		every roll	40	(1.00)	41	(1.03)
Minimum		every roll	36	(0.90)	39	(0.98)
Tensile Properties:	ASTM D638,Type IV / D6693					
Yield Strength, ppi (N/cm) - TD		every 2nd	84	(147)	97	(170)
- MD		every 2nd	84	(147)	91	(159)
Break Strength, ppi (N/cm) - TD		every 2nd	152	(266)	216	(377)
- MD		every 2nd	152	(266)	211	(370)
Yield Elongation, % - TD	gauge length = 1.3"	every 2nd	12		16	
- MD	(33 mm)	every 2nd	12		19	
Break Elongation, % - TD	gauge length = 2.0"	every 2nd	700		802	
- MD	(51 mm)	every 2nd	700		798	
Tear Resistance, lb. (N)	ASTM D 1004					
- TD		every 2nd	28	(126)	31	(138)
- MD		every 2nd	28	(125)	34	(150)
Puncture Resistance, lb. (N)	ASTM D 4833	every 2nd	72	(320)	107	(476)
Density, g/cc	ASTM D 1505	every 2nd	0.940		0.943	
Carbon Black Content, %	ASTM D 1603*	every 2nd	2.0		2.6	
Carbon Black Dispersion	ASTM D 5596					
Views in Cat1 - Cat2		every 2nd	9		10	

Order No.	38199
Customer Name	In-Line Plastics
Project Name	In-Line Plastics P.O. 3844
Location	Austin, TX

*Modified

APPROVED D.G. 1/25/2005 QA

Attachment P

Annual Cropping Plan

1.0 Annual Cropping Plan

a. Soils Map: See Attachment R.

b. Types of Crops and Acreage:

- Turf – Bermuda and Winter Rye 140 ac.
- Cedar Trees – Ashe Juniper 113 ac.

c. Growing Seasons for Each Crop:

- Turf – Bermuda – April through October
- Winter Rye – October through April
- Cedar Trees – Grow year-round in Central Texas Hill Country

d. Nutrient Requirements for Each Crop:

- Turf – Bermuda – N = 220 lb/ac
- Winter Rye – N = 220 lb/ac
- Cedar Trees – N/A

e. Additional Fertilizer Requirements for Each Crop:

- Turf – Additional nitrogen at a rate of approximately 170 lbs/ac/yr. when Bermuda is over-seeded with Winter Rye.
- Cedar Trees – N/A

f. Proposed Additional Fertilizer Applications for Each Crop:

- Turf – Additional nitrogen at a rate of approximately 170 lbs/ac/yr.
- Cedar Trees – N/A

g. Method of Fertilizer Application for Each Crop:

- Turf – Dry, granular, broadcast by large spreader.
- Cedar Trees – N/A

f. Supplemental Watering Requirements for Each Crop:

- Turf – No supplemental watering proposed.
- Cedar Trees – No supplemental watering proposed.

g. Salt Tolerances for Each Crop:

- Turf – Bermuda – 8.0 - 12.0 mmhos/cm @ 25 degrees C
- Winter Rye – 6.0 - 8.0 mmhos/cm @ 25 degrees C
- Cedar Trees – Specific salt tolerance has not been determined, therefore as a conservative measure the salt tolerance should be considered as relatively salt tolerant 6.0 - 8.0 mmhos/cm @ 25 degrees C.

h. Harvesting Method and Number of Harvest Per Year for Each Crop:

- Turf – Bermuda & Winter Rye – Turf is cut with a specialized power mower designed specifically for golf course maintenance. Typically, the golf course is mowed once a week during the summer months and once every two weeks during the winter months.
- Cedar Trees – No annual harvesting will occur.

2.0 References

1. USDA, NRCS. 2023. The PLANTS Database (http://plants.usda.gov, 09/18/2023). National Plant Data Team, Greensboro, NC USA.
2. Texas A&M AgriLife's s-crop table: *https://nutrientmanagement.tamu.edu/planning.html*
3. Texas A&M Agrilife Extension: *The Texas Nutrient Management Website (tamu.edu)*

Attachment Q

Water Well Data

Texas Water Development Board (TWDB)
Groundwater Database (GWDB)
Well Information Report for State Well Number 57-40-602

GWDB Reports and Downloads

Well Basic Details

Scanned Documents

State Well Number	5740602
County	Travis
River Basin	Colorado
Groundwater Management Area	8
Regional Water Planning Area	K - Lower Colorado
Groundwater Conservation District	GCD Does Not Exist
Latitude (decimal degrees)	30.450278
Latitude (degrees minutes seconds)	30° 27' 01" N
Longitude (decimal degrees)	-98.003056
Longitude (degrees minutes seconds)	098° 00' 11" W
Coordinate Source	+/- 5 Seconds
Aquifer Code	218GLRSL - Glen Rose Limestone, Lower Member
Aquifer	Trinity
Aquifer Pick Method	
Land Surface Elevation (feet above sea level)	665
Land Surface Elevation Method	Interpolated From Topo Map
Well Depth (feet below land surface)	
Well Depth Source	
Drilling Start Date	
Drilling End Date	
Drilling Method	
Borehole Completion	

Well Type	Withdrawal of Water
Well Use	Unused
Water Level Observation	None
Water Quality Available	No
Pump	None
Pump Depth (feet below land surface)	
Power Type	
Annular Seal Method	
Surface Completion	
Owner	Lower Colorado River Authority
Driller	
Other Data Available	
Well Report Tracking Number	
Plugging Report Tracking Number	
U.S. Geological Survey Site Number	
Texas Commission on Environmental Quality Source Id	
Groundwater Conservation District Well Number	
Owner Well Number	
Other Well Number	
Previous State Well Number	
Reporting Agency	
Created Date	
Last Update Date	3/4/2020

Remarks	Reported flow 200 GPM in 1973.

Casing - No Data

Well Tests - No Data

Lithology - No Data

Annular Seal Range - No Data

Borehole - No Data

Plugged Back - No Data

Filter Pack - No Data

Packers - No Data

Water Level Measurements

No Data Available

Water Quality Analysis - No Data Available

GWDB DISCLAIMER: Except where noted, all of the information provided in the Texas Water Development Board (TWDB) Groundwater Database (https://www.twdb.texas.gov/groundwater/data/gwdbrpt.asp) is believed to be accurate and reliable; however, the TWDB assumes no responsibility for any errors appearing in rules or otherwise. Further, TWDB assumes no responsibility for the use of the information provided. PLEASE NOTE that users of these data are responsible for checking the accuracy, completeness, currency and/or suitability of all information themselves. TWDB makes no guarantees or warranties as to the accuracy, completeness, currency, or suitability of the information provided via the Groundwater Database (GWDB). TWDB specifically disclaims any and all liability for any claims or damages that may result from providing GWDB data or the information it contains. For additional information or answers to questions concerning the TWDB GWDB, contact the Groundwater Data Team at GroundwaterData@twdb.texas.gov.

Texas Water Development Board (TWDB)
Groundwater Database (GWDB)
Well Information Report for State Well Number 58-33-101

GWDB Reports and Downloads

Well Basic Details

Scanned Documents

State Well Number	5833101
County	Travis
River Basin	Colorado
Groundwater Management Area	8
Regional Water Planning Area	K - Lower Colorado
Groundwater Conservation District	GCD Does Not Exist
Latitude (decimal degrees)	30.483055
Latitude (degrees minutes seconds)	30° 28' 59" N
Longitude (decimal degrees)	-97.979167
Longitude (degrees minutes seconds)	097° 58' 45" W
Coordinate Source	+/- 10 Seconds
Aquifer Code	218GLRSL - Glen Rose Limestone, Lower Member
Aquifer	Trinity
Aquifer Pick Method	
Land Surface Elevation (feet above sea level)	930
Land Surface Elevation Method	Interpolated From Topo Map
Well Depth (feet below land surface)	513
Well Depth Source	Unknown
Drilling Start Date	
Drilling End Date	0/0/1947
Drilling Method	
Borehole Completion	

Well Type	Withdrawal of Water
Well Use	Domestic
Water Level Observation	Miscellaneous Measurements
Water Quality Available	No
Pump	Piston
Pump Depth (feet below land surface)	
Power Type	Windmill
Annular Seal Method	
Surface Completion	
Owner	J.S. Wheless
Driller	A.C. Clements and J.D. Henderson
Other Data Available	
Well Report Tracking Number	
Plugging Report Tracking Number	
U.S. Geological Survey Site Number	
Texas Commission on Environmental Quality Source Id	
Groundwater Conservation District Well Number	
Owner Well Number	
Other Well Number	
Previous State Well Number	
Reporting Agency	
Created Date	
Last Update Date	3/4/2020

Remarks	Depth 330ft before 1942. Well C-6 in 1957 Travis County report.

Casing - No Data

Well Tests - No Data

Lithology - No Data

Annular Seal Range - No Data

Borehole - No Data

Plugged Back - No Data

Filter Pack - No Data

Packers - No Data

Water Level Measurements

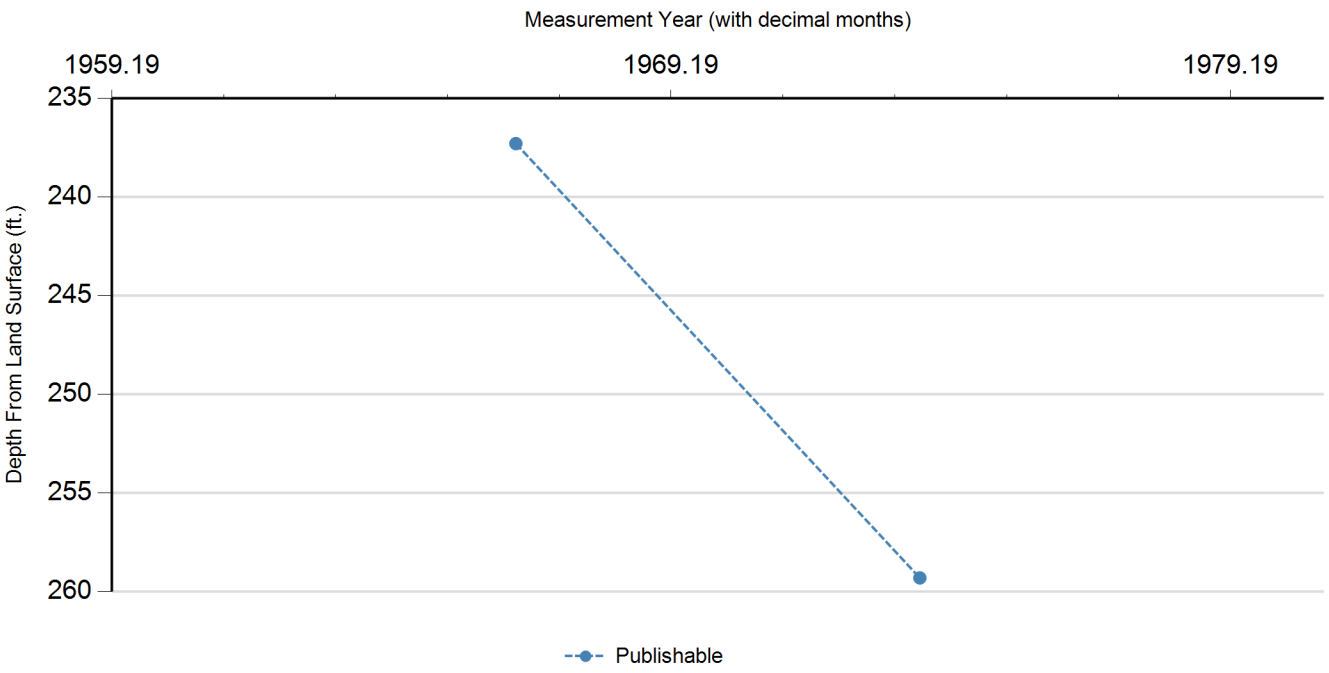

Status Code	Date	Time	Water Level (ft. below land surface)	Change value in ( ) indicates rise in level	Water Elevation (ft. above sea level)	Meas #	Measuring Agency	Method	Remark ID	Comments
P	6/2/1966		237.3		692.7	1	Other or Source of Measurement Unknown	Unknown		
P	8/24/1973		259.3	22.00	670.7	1	Other or Source of Measurement Unknown	Unknown		

Code Descriptions

Status Code	Status Description
P	Publishable

Water Quality Analysis - No Data Available

GWDB DISCLAIMER: Except where noted, all of the information provided in the Texas Water Development Board (TWDB) Groundwater Database (https://www.twdb.texas.gov/groundwater/data/gwdbrpt.asp) is believed to be accurate and reliable; however, the TWDB assumes no responsibility for any errors appearing in rules or otherwise. Further, TWDB assumes no responsibility for the use of the information provided. PLEASE NOTE that users of these data are responsible for checking the accuracy, completeness, currency and/or suitability of all information themselves. TWDB makes no guarantees or warranties as to the accuracy, completeness, currency, or suitability of the information provided via the Groundwater Database (GWDB). TWDB specifically disclaims any and all liability for any claims or damages that may result from providing GWDB data or the information it contains. For additional information or answers to questions concerning the TWDB GWDB, contact the Groundwater Data Team at GroundwaterData@twdb.texas.gov.

Texas Water Development Board (TWDB)
Groundwater Database (GWDB)
Well Information Report for State Well Number 58-33-102

GWDB Reports and Downloads

Well Basic Details

Scanned Documents

State Well Number	5833102
County	Travis
River Basin	Colorado
Groundwater Management Area	8
Regional Water Planning Area	K - Lower Colorado
Groundwater Conservation District	GCD Does Not Exist
Latitude (decimal degrees)	30.462778
Latitude (degrees minutes seconds)	30° 27' 46" N
Longitude (decimal degrees)	-97.976944
Longitude (degrees minutes seconds)	097° 58' 37" W
Coordinate Source	+/- 10 Seconds
Aquifer Code	218GLRSL - Glen Rose Limestone, Lower Member
Aquifer	Trinity
Aquifer Pick Method	
Land Surface Elevation (feet above sea level)	961
Land Surface Elevation Method	Digital Elevation Model -DEM
Well Depth (feet below land surface)	600
Well Depth Source	Owner
Drilling Start Date	
Drilling End Date	
Drilling Method	
Borehole Completion	

Well Type	Withdrawal of Water
Well Use	Public Supply
Water Level Observation	None
Water Quality Available	Yes
Pump	Submersible
Pump Depth (feet below land surface)	
Power Type	Electric Motor
Annular Seal Method	
Surface Completion	
Owner	C.P. Harris
Driller	Dick Sanders Drilling
Other Data Available	
Well Report Tracking Number	
Plugging Report Tracking Number	
U.S. Geological Survey Site Number	
Texas Commission on Environmental Quality Source Id	
Groundwater Conservation District Well Number	
Owner Well Number	
Other Well Number	
Previous State Well Number	
Reporting Agency	Texas Water Development Board
Created Date	6/1/1966
Last Update Date	3/4/2020

Remarks	

Casing - No Data

Well Tests - No Data

Lithology - No Data

Annular Seal Range - No Data

Borehole - No Data

Plugged Back - No Data

Filter Pack - No Data

Packers - No Data

Water Level Measurements

No Data Available

Water Quality Analysis

Sample Date: 6/1/1966 **Sample Time:** 0000 **Sample Number:** 1 **Collection Entity:** Texas Water Development Board

Sampled Aquifer: Glen Rose Limestone, Lower Member

Analyzed Lab: Texas Department of Health **Reliability:** From well not sufficiently pumped; not filtered or preserved

Collection Remarks: distribution

Parameter Code	Parameter Description	Flag	Value*	Units	Plus/Minus
00415	ALKALINITY, PHENOLPHTHALEIN (MG/L)		0	mg/L	
00410	ALKALINITY, TOTAL (MG/L AS CACO3)		268	mg/L as CACO3	
00440	BICARBONATE ION, CALCULATED (MG/L AS HCO3)		327.05	mg/L	
00910	CALCIUM (MG/L)		79	mg/L	
00445	CARBONATE ION, CALCULATED (MG/L AS CO3)		0	mg/L	
00940	CHLORIDE, TOTAL (MG/L AS CL)		20	mg/L	
00950	FLUORIDE, DISSOLVED (MG/L AS F)		1	mg/L	
00900	HARDNESS, TOTAL, CALCULATED (MG/L AS CACO3)		410	mg/L as CACO3	
01045	IRON, TOTAL (UG/L AS FE)	<	20	ug/L	
00920	MAGNESIUM (MG/L)		52	mg/L	
71851	NITRATE NITROGEN, DISSOLVED, CALCULATED (MG/L AS NO3)	<	0.4	mg/L as NO3	
00400	PH (STANDARD UNITS), FIELD		7.7	SU	
71860	RESIDUAL SODIUM CARBONATE, CALCULATED		0		
00955	SILICA, DISSOLVED (MG/L AS SI02)		16	mg/L as SIO2	
00931	SODIUM ADSORPTION RATIO, CALCULATED (SAR)		0.97		
00932	SODIUM, CALCULATED, PERCENT		19	PCT	
00929	SODIUM, TOTAL (MG/L AS NA)		45	mg/L	
00094	SPECIFIC CONDUCTANCE, FIELD (UMHOS/CM AT 25C)		1085	MICR	
00945	SULFATE, TOTAL (MG/L AS SO4)		211	mg/L as SO4	
00010	TEMPERATURE, WATER (CELSIUS)		29	C	
70301	TOTAL DISSOLVED SOLIDS , SUM OF CONSTITUENTS (MG/L)		585	mg/L	

** Value may not display all significant digits for parameter in results, check Scanned Documents for laboratory paperwork..*

GWDB DISCLAIMER: Except where noted, all of the information provided in the Texas Water Development Board (TWDB) Groundwater Database (https://www.twdb.texas.gov/groundwater/data/gwdbrpt.asp) is believed to be accurate and reliable; however, the TWDB assumes no responsibility for any errors appearing in rules or otherwise. Further, TWDB assumes no responsibility for the use of the information provided. PLEASE NOTE that users of these data are responsible for checking the accuracy, completeness, currency and/or suitability of all information themselves. TWDB makes no guarantees or warranties as to the accuracy, completeness, currency, or suitability of the information provided via the Groundwater Database (GWDB). TWDB specifically disclaims any and all liability for any claims or damages that may result from providing GWDB data or the information it contains. For additional information or answers to questions concerning the TWDB GWDB, contact the Groundwater Data Team at GroundwaterData@twdb.texas.gov.

Texas Water Development Board (TWDB)
Groundwater Database (GWDB)
Well Information Report for State Well Number 58-33-103

GWDB Reports and Downloads

Well Basic Details

Scanned Documents

State Well Number	5833103
County	Travis
River Basin	Colorado
Groundwater Management Area	8
Regional Water Planning Area	K - Lower Colorado
Groundwater Conservation District	GCD Does Not Exist
Latitude (decimal degrees)	30.483889
Latitude (degrees minutes seconds)	30° 29' 02" N
Longitude (decimal degrees)	-97.971944
Longitude (degrees minutes seconds)	097° 58' 19" W
Coordinate Source	+/- 10 Seconds
Aquifer Code	218HNHS - Hensell Sand and Hosston Formation
Aquifer	Trinity
Aquifer Pick Method	
Land Surface Elevation (feet above sea level)	1168
Land Surface Elevation Method	Digital Elevation Model -DEM
Well Depth (feet below land surface)	926
Well Depth Source	Unknown
Drilling Start Date	
Drilling End Date	0/0/1962
Drilling Method	
Borehole Completion	

Well Type	Withdrawal of Water
Well Use	Domestic
Water Level Observation	Miscellaneous Measurements
Water Quality Available	Yes
Pump	Submersible
Pump Depth (feet below land surface)	
Power Type	Electric Motor
Annular Seal Method	
Surface Completion	
Owner	J.S. Wheless
Driller	Sterzing Drilling
Other Data Available	
Well Report Tracking Number	
Plugging Report Tracking Number	
U.S. Geological Survey Site Number	
Texas Commission on Environmental Quality Source Id	
Groundwater Conservation District Well Number	
Owner Well Number	
Other Well Number	
Previous State Well Number	
Reporting Agency	
Created Date	
Last Update Date	3/4/2020

Remarks	Perforated from 526 to 631 to 799 ft. Reported yield 36 gal/min. Cemented from 20 ft to surface.

Casing - No Data

Well Tests - No Data

Lithology - No Data

Annular Seal Range - No Data

Borehole - No Data

Plugged Back - No Data

Filter Pack - No Data

Packers - No Data

Water Level Measurements

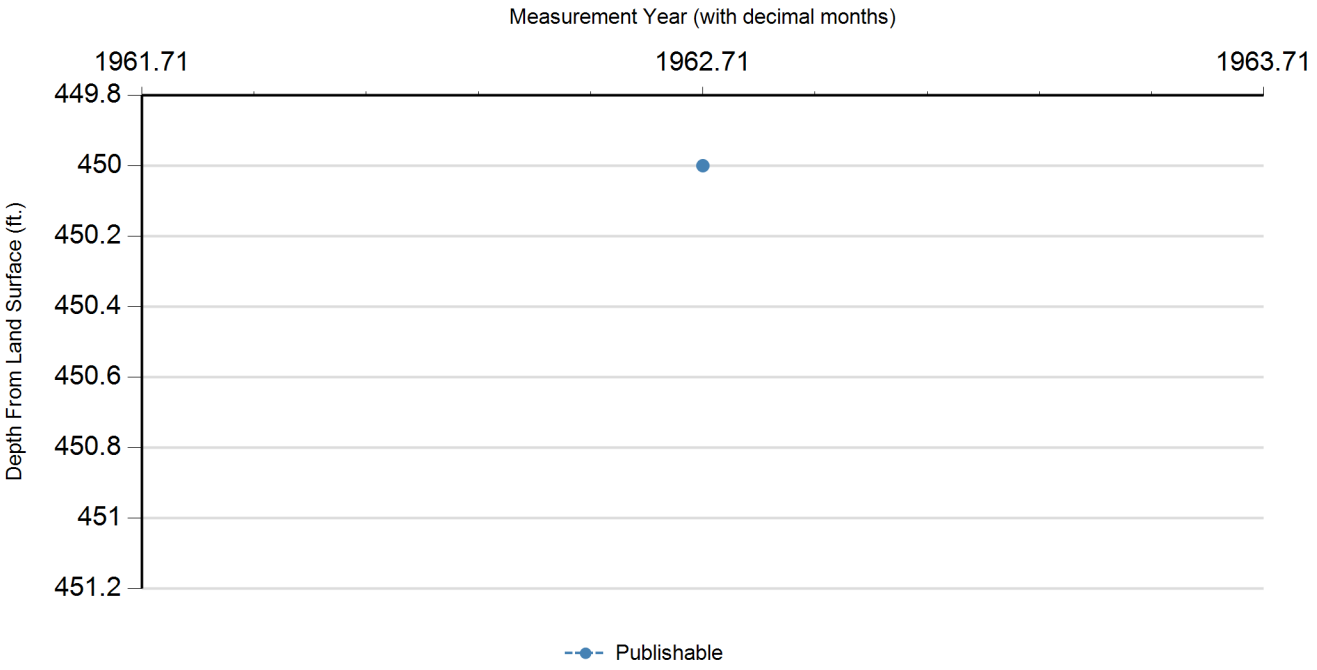

Status Code	Date	Time	Water Level (ft. below land surface)	Change value in ( ) indicates rise in level	Water Elevation (ft. above sea level)	Meas #	Measuring Agency	Method	Remark ID	Comments
P	9/20/1962		450		718	1	Other or Source of Measurement Unknown	Unknown		

Code Descriptions

Status Code	Status Description
P	Publishable

Water Quality Analysis

Sample Date: 11/10/1966 **Sample Time:** 0000 **Sample Number:** 1 **Collection Entity:** Texas Water Development Board

Sampled Aquifer: Hensell Sand and Hosston Formation

Analyzed Lab: Texas Department of Health **Reliability:** From well not sufficiently pumped; not filtered or preserved

Collection Remarks: pressure tank

Parameter Code	Parameter Description	Flag	Value*	Units	Plus/Minus
00415	ALKALINITY, PHENOLPHTHALEIN (MG/L)		0	mg/L	
00410	ALKALINITY, TOTAL (MG/L AS CACO3)		296	mg/L as CACO3	
00440	BICARBONATE ION, CALCULATED (MG/L AS HCO3)		361.22	mg/L	
00910	CALCIUM (MG/L)		52	mg/L	
00445	CARBONATE ION, CALCULATED (MG/L AS CO3)		0	mg/L	
00940	CHLORIDE, TOTAL (MG/L AS CL)		37	mg/L	
00950	FLUORIDE, DISSOLVED (MG/L AS F)		1.3	mg/L	
00900	HARDNESS, TOTAL, CALCULATED (MG/L AS CACO3)		310	mg/L as CACO3	
01045	IRON, TOTAL (UG/L AS FE)		80	ug/L	
00920	MAGNESIUM (MG/L)		44	mg/L	
71851	NITRATE NITROGEN, DISSOLVED, CALCULATED (MG/L AS NO3)	<	0.4	mg/L as NO3	
00400	PH (STANDARD UNITS), FIELD		7.7	SU	
71860	RESIDUAL SODIUM CARBONATE, CALCULATED		0		
00955	SILICA, DISSOLVED (MG/L AS SI02)		13	mg/L as SIO2	
00931	SODIUM ADSORPTION RATIO, CALCULATED (SAR)		1.9		
00932	SODIUM, CALCULATED, PERCENT		35	PCT	
00929	SODIUM, TOTAL (MG/L AS NA)		77	mg/L	
00094	SPECIFIC CONDUCTANCE, FIELD (UMHOS/CM AT 25C)		1020	MICR	
00945	SULFATE, TOTAL (MG/L AS SO4)		133	mg/L as SO4	
70301	TOTAL DISSOLVED SOLIDS , SUM OF CONSTITUENTS (MG/L)		535	mg/L	

** Value may not display all significant digits for parameter in results, check Scanned Documents for laboratory paperwork..*

GWDB DISCLAIMER: Except where noted, all of the information provided in the Texas Water Development Board (TWDB) Groundwater Database (https://www.twdb.texas.gov/groundwater/data/gwdbrpt.asp) is believed to be accurate and reliable; however, the TWDB assumes no responsibility for any errors appearing in rules or otherwise. Further, TWDB assumes no responsibility for the use of the information provided. PLEASE NOTE that users of these data are responsible for checking the accuracy, completeness, currency and/or suitability of all information themselves. TWDB makes no guarantees or warranties as to the accuracy, completeness, currency, or suitability of the information provided via the Groundwater Database (GWDB). TWDB specifically disclaims any and all liability for any claims or damages that may result from providing GWDB data or the information it contains. For additional information or answers to questions concerning the TWDB GWDB, contact the Groundwater Data Team at GroundwaterData@twdb.texas.gov.

Texas Water Development Board (TWDB)
Groundwater Database (GWDB)
Well Information Report for State Well Number 58-33-104

GWDB Reports and Downloads

Well Basic Details

Scanned Documents

State Well Number	5833104
County	Travis
River Basin	Colorado
Groundwater Management Area	8
Regional Water Planning Area	K - Lower Colorado
Groundwater Conservation District	GCD Does Not Exist
Latitude (decimal degrees)	30.484445
Latitude (degrees minutes seconds)	30° 29' 04" N
Longitude (decimal degrees)	-97.983055
Longitude (degrees minutes seconds)	097° 58' 59" W
Coordinate Source	+/- 10 Seconds
Aquifer Code	218GLRSL - Glen Rose Limestone, Lower Member
Aquifer	Trinity
Aquifer Pick Method	
Land Surface Elevation (feet above sea level)	840
Land Surface Elevation Method	Digital Elevation Model -DEM
Well Depth (feet below land surface)	455
Well Depth Source	Unknown
Drilling Start Date	
Drilling End Date	0/0/1975
Drilling Method	
Borehole Completion	

Well Type	Withdrawal of Water
Well Use	Irrigation
Water Level Observation	Miscellaneous Measurements
Water Quality Available	No
Pump	Submersible
Pump Depth (feet below land surface)	
Power Type	Electric Motor
Annular Seal Method	
Surface Completion	
Owner	N.R.C. Inc.
Driller	M.J. Powell
Other Data Available	
Well Report Tracking Number	
Plugging Report Tracking Number	
U.S. Geological Survey Site Number	
Texas Commission on Environmental Quality Source Id	
Groundwater Conservation District Well Number	
Owner Well Number	
Other Well Number	
Previous State Well Number	
Reporting Agency	
Created Date	
Last Update Date	3/4/2020

Remarks	

Casing - No Data

Well Tests - No Data

Lithology - No Data

Annular Seal Range - No Data

Borehole - No Data

Plugged Back - No Data

Filter Pack - No Data

Packers - No Data

Water Level Measurements

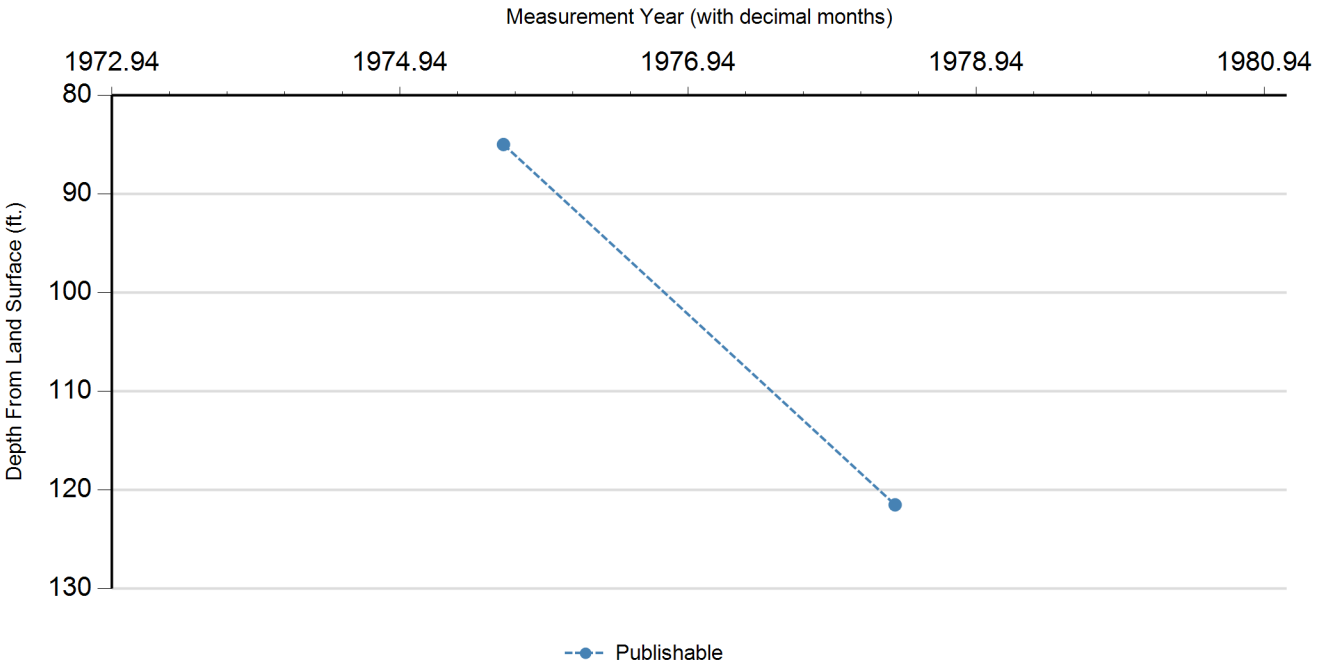

Status Code	Date	Time	Water Level (ft. below land surface)	Change value in ( ) indicates rise in level	Water Elevation (ft. above sea level)	Meas #	Measuring Agency	Method	Remark ID	Comments
P	7/0/1975		85		755	1	Other or Source of Measurement Unknown	Unknown		
P	5/16/1978		121.5	36.50	718.5	1	Other or Source of Measurement Unknown	Unknown		

Code Descriptions

Status Code	Status Description
P	Publishable

Water Quality Analysis - No Data Available

GWDB DISCLAIMER: Except where noted, all of the information provided in the Texas Water Development Board (TWDB) Groundwater Database (https://www.twdb.texas.gov/groundwater/data/gwdbrpt.asp) is believed to be accurate and reliable; however, the TWDB assumes no responsibility for any errors appearing in rules or otherwise. Further, TWDB assumes no responsibility for the use of the information provided. PLEASE NOTE that users of these data are responsible for checking the accuracy, completeness, currency and/or suitability of all information themselves. TWDB makes no guarantees or warranties as to the accuracy, completeness, currency, or suitability of the information provided via the Groundwater Database (GWDB). TWDB specifically disclaims any and all liability for any claims or damages that may result from providing GWDB data or the information it contains. For additional information or answers to questions concerning the TWDB GWDB, contact the Groundwater Data Team at GroundwaterData@twdb.texas.gov.

Texas Water Development Board (TWDB)
Groundwater Database (GWDB)
Well Information Report for State Well Number 58-33-401

GWDB Reports and Downloads

Well Basic Details

Scanned Documents

State Well Number	5833401
County	Travis
River Basin	Colorado
Groundwater Management Area	8
Regional Water Planning Area	K - Lower Colorado
Groundwater Conservation District	GCD Does Not Exist
Latitude (decimal degrees)	30.449722
Latitude (degrees minutes seconds)	30° 26' 59" N
Longitude (decimal degrees)	-97.979722
Longitude (degrees minutes seconds)	097° 58' 47" W
Coordinate Source	+/- 10 Seconds
Aquifer Code	218GLRSL - Glen Rose Limestone, Lower Member
Aquifer	Trinity
Aquifer Pick Method	
Land Surface Elevation (feet above sea level)	970
Land Surface Elevation Method	Interpolated From Topo Map
Well Depth (feet below land surface)	422
Well Depth Source	Unknown
Drilling Start Date	
Drilling End Date	0/0/1938
Drilling Method	
Borehole Completion	

Well Type	Withdrawal of Water
Well Use	Stock
Water Level Observation	Miscellaneous Measurements
Water Quality Available	Yes
Pump	Piston
Pump Depth (feet below land surface)	
Power Type	Windmill
Annular Seal Method	
Surface Completion	
Owner	Frank De Groot
Driller	S.W. Glass
Other Data Available	
Well Report Tracking Number	
Plugging Report Tracking Number	
U.S. Geological Survey Site Number	
Texas Commission on Environmental Quality Source Id	
Groundwater Conservation District Well Number	
Owner Well Number	
Other Well Number	
Previous State Well Number	
Reporting Agency	
Created Date	
Last Update Date	3/4/2020

Remarks	Reported 80 ft. drawdown after bailing 5 gal/min for 40 minutes. Well C-31 in 1957 Travis County report.

Casing - No Data

Well Tests - No Data

Lithology - No Data

Annular Seal Range - No Data

Borehole - No Data

Plugged Back - No Data

Filter Pack - No Data

Packers - No Data

Water Level Measurements

Status Code	Date	Time	Water Level (ft. below land surface)	Change value in ( ) indicates rise in level	Water Elevation (ft. above sea level)	Meas #	Measuring Agency	Method	Remark ID	Comments
P	11/9/1938		342		628	1	Other or Source of Measurement Unknown	Unknown		

Code Descriptions

Status Code	Status Description
P	Publishable

Water Quality Analysis

Sample Date: 11/9/1938 **Sample Time:** 0000 **Sample Number:** 1 **Collection Entity:** U.S. Geological Survey

Sampled Aquifer: Glen Rose Limestone, Lower Member

Analyzed Lab: WPA **Reliability:** From a report; unknown sample collection & preservation

Collection Remarks: No Data

Parameter Code	Parameter Description	Flag	Value*	Units	Plus/Minus
00415	ALKALINITY, PHENOLPHTHALEIN (MG/L)		0	mg/L	
00410	ALKALINITY, TOTAL (MG/L AS CACO3)		290.16	mg/L as CACO3	
00440	BICARBONATE ION, CALCULATED (MG/L AS HCO3)		354.1	mg/L	
00910	CALCIUM (MG/L)		459	mg/L	
00445	CARBONATE ION, CALCULATED (MG/L AS CO3)		0	mg/L	
00940	CHLORIDE, TOTAL (MG/L AS CL)		27	mg/L	
00900	HARDNESS, TOTAL, CALCULATED (MG/L AS CACO3)		1642	mg/L as CACO3	
00920	MAGNESIUM (MG/L)		121	mg/L	
71851	NITRATE NITROGEN, DISSOLVED, CALCULATED (MG/L AS NO3)		0.2	mg/L as NO3	
71860	RESIDUAL SODIUM CARBONATE, CALCULATED		0		
00931	SODIUM ADSORPTION RATIO, CALCULATED (SAR)		0.26		
00932	SODIUM, CALCULATED, PERCENT		3	PCT	
00929	SODIUM, TOTAL (MG/L AS NA)	calculated	24	mg/L	
00945	SULFATE, TOTAL (MG/L AS SO4)		1310	mg/L as SO4	
00010	TEMPERATURE, WATER (CELSIUS)		23	C	
70301	TOTAL DISSOLVED SOLIDS , SUM OF CONSTITUENTS (MG/L)		2115	mg/L	

** Value may not display all significant digits for parameter in results, check Scanned Documents for laboratory paperwork..*

GWDB DISCLAIMER: Except where noted, all of the information provided in the Texas Water Development Board (TWDB) Groundwater Database (https://www.twdb.texas.gov/groundwater/data/gwdbrpt.asp) is believed to be accurate and reliable; however, the TWDB assumes no responsibility for any errors appearing in rules or otherwise. Further, TWDB assumes no responsibility for the use of the information provided. PLEASE NOTE that users of these data are responsible for checking the accuracy, completeness, currency and/or suitability of all information themselves. TWDB makes no guarantees or warranties as to the accuracy, completeness, currency, or suitability of the information provided via the Groundwater Database (GWDB). TWDB specifically disclaims any and all liability for any claims or damages that may result from providing GWDB data or the information it contains. For additional information or answers to questions concerning the TWDB GWDB, contact the Groundwater Data Team at GroundwaterData@twdb.texas.gov.

Texas Water Development Board (TWDB)
Groundwater Database (GWDB)
Well Information Report for State Well Number 58-33-402

GWDB Reports and Downloads

Well Basic Details

Scanned Documents

State Well Number	5833402
County	Travis
River Basin	Colorado
Groundwater Management Area	8
Regional Water Planning Area	K - Lower Colorado
Groundwater Conservation District	GCD Does Not Exist
Latitude (decimal degrees)	30.4425
Latitude (degrees minutes seconds)	30° 26' 33" N
Longitude (decimal degrees)	-97.975555
Longitude (degrees minutes seconds)	097° 58' 32" W
Coordinate Source	+/- 10 Seconds
Aquifer Code	218GLRS - Glen Rose Limestone
Aquifer	Trinity
Aquifer Pick Method	
Land Surface Elevation (feet above sea level)	950
Land Surface Elevation Method	Interpolated From Topo Map
Well Depth (feet below land surface)	535
Well Depth Source	Unknown
Drilling Start Date	
Drilling End Date	0/0/1964
Drilling Method	
Borehole Completion	

Well Type	Withdrawal of Water
Well Use	Stock
Water Level Observation	Miscellaneous Measurements
Water Quality Available	Yes
Pump	Piston
Pump Depth (feet below land surface)	
Power Type	Windmill
Annular Seal Method	
Surface Completion	
Owner	Ivan Pearson
Driller	Audrey E. Sanford
Other Data Available	
Well Report Tracking Number	
Plugging Report Tracking Number	
U.S. Geological Survey Site Number	
Texas Commission on Environmental Quality Source Id	
Groundwater Conservation District Well Number	
Owner Well Number	
Other Well Number	
Previous State Well Number	
Reporting Agency	
Created Date	
Last Update Date	3/4/2020

Remarks	

Casing - No Data

Well Tests - No Data

Lithology - No Data

Annular Seal Range - No Data

Borehole - No Data

Plugged Back - No Data

Filter Pack - No Data

Packers - No Data

Water Level Measurements

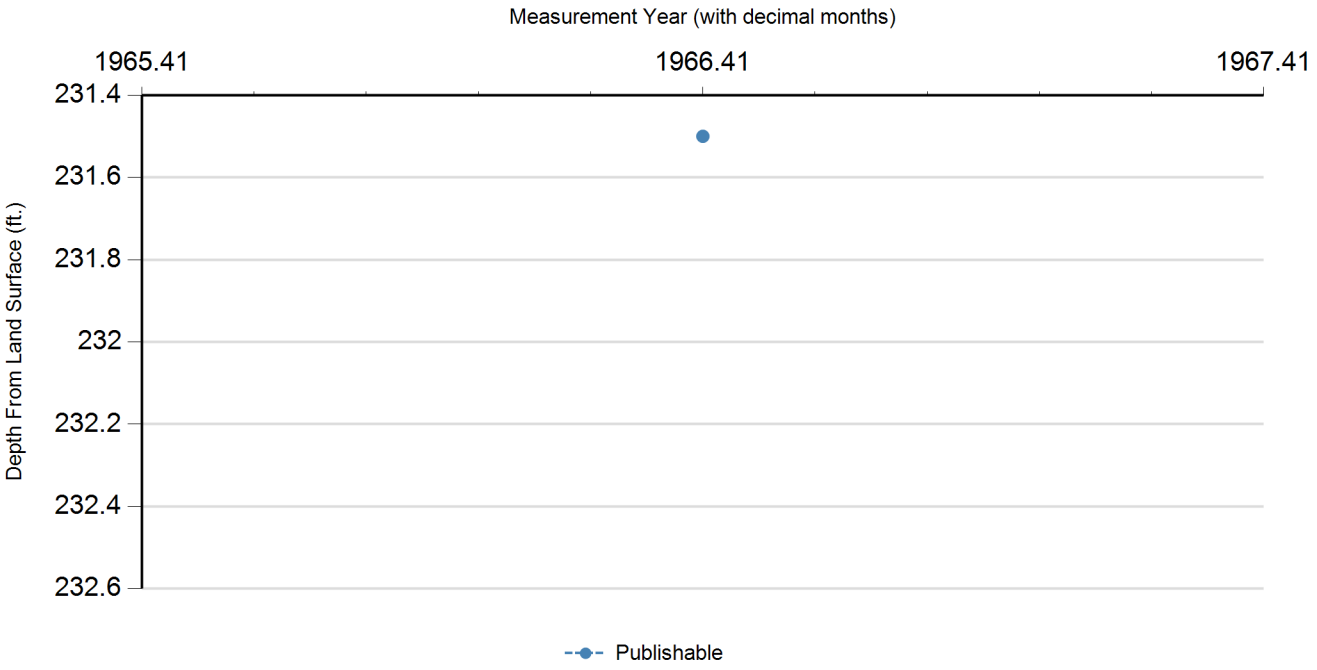

Status Code	Date	Time	Water Level (ft. below land surface)	Change value in ( ) indicates rise in level	Water Elevation (ft. above sea level)	Meas #	Measuring Agency	Method	Remark ID	Comments
P	6/1/1966		231.5		718.5	1	Other or Source of Measurement Unknown	Unknown		

Code Descriptions

Status Code	Status Description
P	Publishable

Water Quality Analysis

Sample Date: 6/1/1966 **Sample Time:** 0000 **Sample Number:** 1 **Collection Entity:** Texas Water Development Board

Sampled Aquifer: Glen Rose Limestone

Analyzed Lab: Texas Department of Health **Reliability:** From well not sufficiently pumped; not filtered or preserved

Collection Remarks: mill not pumping

Parameter Code	Parameter Description	Flag	Value*	Units	Plus/Minus
00415	ALKALINITY, PHENOLPHTHALEIN (MG/L)		0	mg/L	
00410	ALKALINITY, TOTAL (MG/L AS CACO3)		283	mg/L as CACO3	
00440	BICARBONATE ION, CALCULATED (MG/L AS HCO3)		345.36	mg/L	
00910	CALCIUM (MG/L)		67	mg/L	
00445	CARBONATE ION, CALCULATED (MG/L AS CO3)		0	mg/L	
00940	CHLORIDE, TOTAL (MG/L AS CL)		14	mg/L	
00950	FLUORIDE, DISSOLVED (MG/L AS F)		0.6	mg/L	
00900	HARDNESS, TOTAL, CALCULATED (MG/L AS CACO3)		311	mg/L as CACO3	
01045	IRON, TOTAL (UG/L AS FE)		820	ug/L	
00920	MAGNESIUM (MG/L)		35	mg/L	
71851	NITRATE NITROGEN, DISSOLVED, CALCULATED (MG/L AS NO3)	<	0.4	mg/L as NO3	
00400	PH (STANDARD UNITS), FIELD		7.3	SU	
71860	RESIDUAL SODIUM CARBONATE, CALCULATED		0		
00955	SILICA, DISSOLVED (MG/L AS SI02)		10	mg/L as SIO2	
00931	SODIUM ADSORPTION RATIO, CALCULATED (SAR)		0.2		
00932	SODIUM, CALCULATED, PERCENT		5	PCT	
00929	SODIUM, TOTAL (MG/L AS NA)		8	mg/L	
00094	SPECIFIC CONDUCTANCE, FIELD (UMHOS/CM AT 25C)		639	MICR	
00945	SULFATE, TOTAL (MG/L AS SO4)		12	mg/L as SO4	
70301	TOTAL DISSOLVED SOLIDS , SUM OF CONSTITUENTS (MG/L)		316	mg/L	

** Value may not display all significant digits for parameter in results, check Scanned Documents for laboratory paperwork..*

GWDB DISCLAIMER: Except where noted, all of the information provided in the Texas Water Development Board (TWDB) Groundwater Database (https://www.twdb.texas.gov/groundwater/data/gwdbrpt.asp) is believed to be accurate and reliable; however, the TWDB assumes no responsibility for any errors appearing in rules or otherwise. Further, TWDB assumes no responsibility for the use of the information provided. PLEASE NOTE that users of these data are responsible for checking the accuracy, completeness, currency and/or suitability of all information themselves. TWDB makes no guarantees or warranties as to the accuracy, completeness, currency, or suitability of the information provided via the Groundwater Database (GWDB). TWDB specifically disclaims any and all liability for any claims or damages that may result from providing GWDB data or the information it contains. For additional information or answers to questions concerning the TWDB GWDB, contact the Groundwater Data Team at GroundwaterData@twdb.texas.gov.

Texas Water Development Board (TWDB)
Groundwater Database (GWDB)
Well Information Report for State Well Number 58-33-403

GWDB Reports and Downloads

Well Basic Details

Scanned Documents

State Well Number	5833403
County	Travis
River Basin	Colorado
Groundwater Management Area	8
Regional Water Planning Area	K - Lower Colorado
Groundwater Conservation District	GCD Does Not Exist
Latitude (decimal degrees)	30.421389
Latitude (degrees minutes seconds)	30° 25' 17" N
Longitude (decimal degrees)	-97.960278
Longitude (degrees minutes seconds)	097° 57' 37" W
Coordinate Source	+/- 1 Second
Aquifer Code	217HSTN - Hosston Formation
Aquifer	Trinity
Aquifer Pick Method	
Land Surface Elevation (feet above sea level)	770
Land Surface Elevation Method	Interpolated From Topo Map
Well Depth (feet below land surface)	459
Well Depth Source	Measured
Drilling Start Date	
Drilling End Date	10/0/1965
Drilling Method	Mud (Hydraulic) Rotary
Borehole Completion	Screened

Well Type	Withdrawal of Water
Well Use	Unused
Water Level Observation	Historical
Water Quality Available	Yes
Pump	None
Pump Depth (feet below land surface)	
Power Type	
Annular Seal Method	
Surface Completion	
Owner	J.H. Shepler
Driller	Layne-Texas Drilling
Other Data Available	Aquifer Test; Electric Log
Well Report Tracking Number	
Plugging Report Tracking Number	
U.S. Geological Survey Site Number	
Texas Commission on Environmental Quality Source Id	
Groundwater Conservation District Well Number	
Owner Well Number	
Other Well Number	
Previous State Well Number	
Reporting Agency	Texas Water Development Board
Created Date	2/14/1991
Last Update Date	3/4/2020

Remarks	Historical observation well. Former recorder well. Measured yield 23.5 GPM with 106.3 feet drawdown after pumping 4 hours in 1967. Geophysic- al log. Aquifer test in TWDB R-98. Specific capacity 0.3 GPM/ft. Test data in TWDB files.

Casing

Diameter (in.)	Casing Type	Casing Material	Schedule	Gauge	Top Depth (ft.)	Bottom Depth (ft.)
9	Blank	Steel			0	446
7	Screen	Steel			446	459

Well Tests - No Data

Lithology - No Data

Annular Seal Range - No Data

Borehole - No Data

Plugged Back - No Data

Filter Pack - No Data

Packers - No Data

Water Level Measurements

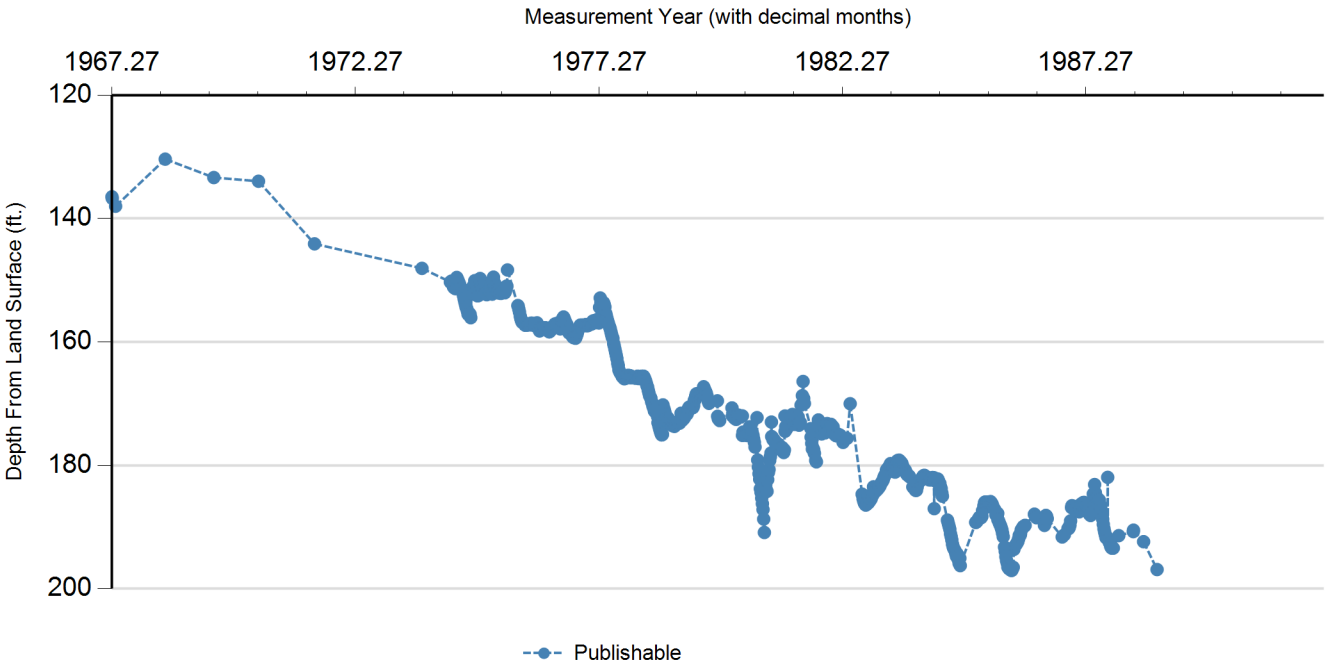

Status Code	Date	Time	Water Level (ft. below land surface)	Change value in ( ) indicates rise in level	Water Elevation (ft. above sea level)	Meas #	Measuring Agency	Method	Remark ID	Comments
P	4/11/1967		136.47		633.53	1	Texas Water Development Board	Steel Tape		
P	4/13/1967		136.73	0.26	633.27	1	Texas Water Development Board	Steel Tape		
P	5/8/1967		138	1.27	632	1	Texas Water Development Board	Steel Tape		
P	5/15/1968		130.37	(7.63)	639.63	1	Texas Water Development Board	Steel Tape		
P	5/14/1969		133.35	2.98	636.65	1	Texas Water Development Board	Steel Tape		
P	4/14/1970		133.95	0.60	636.05	1	Texas Water Development Board	Steel Tape		
P	6/9/1971		144.1	10.15	625.9	1	Texas Water Development Board	Steel Tape		
P	8/24/1973		148.07	3.97	621.93	1	Texas Water Development Board	Steel Tape		
P	3/22/1974		150.28	2.21	619.72	1	Texas Water Development Board	Steel Tape		
P	3/25/1974		150.35	0.07	619.65	1	Texas Water Development Board	Recorder (Float or Transducer)		
P	3/30/1974		150.13	(0.22)	619.87	1	Texas Water Development Board	Recorder (Float or Transducer)		
P	4/5/1974		150.51	0.38	619.49	1	Texas Water Development Board	Recorder (Float or Transducer)		
P	4/10/1974		150.65	0.14	619.35	1	Texas Water Development Board	Recorder (Float or Transducer)		
P	4/15/1974		151.07	0.42	618.93	1	Texas Water Development Board	Recorder (Float or Transducer)		
P	4/19/1974		151.19	0.12	618.81	1	Texas Water Development Board	Steel Tape		

Status Code	Date	Time	Water Level (ft. below land surface)	Change value in ( ) indicates rise in level	Water Elevation (ft. above sea level)	Meas #	Measuring Agency	Method	Remark ID	Comments
P	4/20/1974		151.11	(0.08)	618.89	1	Texas Water Development Board	Recorder (Float or Transducer)		
P	4/25/1974		151.27	0.16	618.73	1	Texas Water Development Board	Recorder (Float or Transducer)		
P	4/30/1974		151.36	0.09	618.64	1	Texas Water Development Board	Recorder (Float or Transducer)		
P	5/5/1974		150.51	(0.85)	619.49	1	Texas Water Development Board	Recorder (Float or Transducer)		
P	5/10/1974		149.54	(0.97)	620.46	1	Texas Water Development Board	Recorder (Float or Transducer)		
P	5/15/1974		149.8	0.26	620.2	1	Texas Water Development Board	Recorder (Float or Transducer)		
P	5/20/1974		150.07	0.27	619.93	1	Texas Water Development Board	Recorder (Float or Transducer)		
P	5/25/1974		150.35	0.28	619.65	1	Texas Water Development Board	Recorder (Float or Transducer)		
P	5/30/1974		150.58	0.23	619.42	1	Texas Water Development Board	Recorder (Float or Transducer)		
P	6/5/1974		150.97	0.39	619.03	1	Texas Water Development Board	Recorder (Float or Transducer)		
P	6/10/1974		151.18	0.21	618.82	1	Texas Water Development Board	Recorder (Float or Transducer)		
P	6/15/1974		151.4	0.22	618.6	1	Texas Water Development Board	Recorder (Float or Transducer)		
P	6/20/1974		151.76	0.36	618.24	1	Texas Water Development Board	Steel Tape		
P	6/25/1974		152.02	0.26	617.98	1	Texas Water Development Board	Recorder (Float or Transducer)		
P	6/30/1974		152.49	0.47	617.51	1	Texas Water Development Board	Recorder (Float or Transducer)		
P	7/5/1974		153.03	0.54	616.97	1	Texas Water Development Board	Recorder (Float or Transducer)		
P	7/10/1974		153.48	0.45	616.52	1	Texas Water Development Board	Recorder (Float or Transducer)		
P	7/15/1974		153.93	0.45	616.07	1	Texas Water Development Board	Recorder (Float or Transducer)		
P	7/20/1974		154.38	0.45	615.62	1	Texas Water Development Board	Recorder (Float or Transducer)		
P	7/25/1974		154.6	0.22	615.4	1	Texas Water Development Board	Recorder (Float or Transducer)		

Status Code	Date	Time	Water Level (ft. below land surface)	Change value in ( ) indicates rise in level	Water Elevation (ft. above sea level)	Meas #	Measuring Agency	Method	Remark ID	Comments
P	7/30/1974		155.02	0.42	614.98	1	Texas Water Development Board	Recorder (Float or Transducer)		
P	8/5/1974		155.54	0.52	614.46	1	Texas Water Development Board	Recorder (Float or Transducer)		
P	8/10/1974		155.36	(0.18)	614.64	1	Texas Water Development Board	Recorder (Float or Transducer)		
P	8/15/1974		155.37	0.01	614.63	1	Texas Water Development Board	Recorder (Float or Transducer)		
P	8/20/1974		155.51	0.14	614.49	1	Texas Water Development Board	Recorder (Float or Transducer)		
P	8/25/1974		156.07	0.56	613.93	1	Texas Water Development Board	Recorder (Float or Transducer)		
P	8/30/1974		152.11	(3.96)	617.89	1	Texas Water Development Board	Recorder (Float or Transducer)		
P	9/5/1974		151.19	(0.92)	618.81	1	Texas Water Development Board	Recorder (Float or Transducer)		
P	9/10/1974		151.73	0.54	618.27	1	Texas Water Development Board	Recorder (Float or Transducer)		
P	9/13/1974		152.18	0.45	617.82	1	Texas Water Development Board	Steel Tape		
P	9/15/1974		152.24	0.06	617.76	1	Texas Water Development Board	Recorder (Float or Transducer)		
P	9/20/1974		150.68	(1.56)	619.32	1	Texas Water Development Board	Recorder (Float or Transducer)		
P	9/25/1974		150.07	(0.61)	619.93	1	Texas Water Development Board	Recorder (Float or Transducer)		
P	10/1/1974		150.6	0.53	619.4	1	Texas Water Development Board	Recorder (Float or Transducer)		
P	10/5/1974		151.13	0.53	618.87	1	Texas Water Development Board	Recorder (Float or Transducer)		
P	10/10/1974		151.65	0.52	618.35	1	Texas Water Development Board	Recorder (Float or Transducer)		
P	10/15/1974		152.52	0.87	617.48	1	Texas Water Development Board	Recorder (Float or Transducer)		
P	10/20/1974		152.47	(0.05)	617.53	1	Texas Water Development Board	Recorder (Float or Transducer)		
P	10/25/1974		152.45	(0.02)	617.55	1	Texas Water Development Board	Recorder (Float or Transducer)		
P	11/1/1974		149.82	(2.63)	620.18	1	Texas Water Development Board	Recorder (Float or Transducer)		

Status Code	Date	Time	Water Level (ft. below land surface)	Change value in ( ) indicates rise in level	Water Elevation (ft. above sea level)	Meas #	Measuring Agency	Method	Remark ID	Comments
P	11/5/1974		149.71	(0.11)	620.29	1	Texas Water Development Board	Recorder (Float or Transducer)		
P	11/10/1974		150.53	0.82	619.47	1	Texas Water Development Board	Recorder (Float or Transducer)		
P	11/15/1974		150.87	0.34	619.13	1	Texas Water Development Board	Recorder (Float or Transducer)		
P	11/20/1974		150.99	0.12	619.01	1	Texas Water Development Board	Recorder (Float or Transducer)		
P	11/25/1974		151.51	0.52	618.49	1	Texas Water Development Board	Recorder (Float or Transducer)		
P	12/1/1974		151.51	0.00	618.49	1	Texas Water Development Board	Recorder (Float or Transducer)		
P	12/5/1974		151.49	(0.02)	618.51	1	Texas Water Development Board	Recorder (Float or Transducer)		
P	12/10/1974		151.73	0.24	618.27	1	Texas Water Development Board	Recorder (Float or Transducer)		
P	12/15/1974		152	0.27	618	1	Texas Water Development Board	Recorder (Float or Transducer)		
P	12/18/1974		152.12	0.12	617.88	1	Texas Water Development Board	Steel Tape		
P	12/20/1974		152.25	0.13	617.75	1	Texas Water Development Board	Recorder (Float or Transducer)		
P	12/25/1974		152.33	0.08	617.67	1	Texas Water Development Board	Recorder (Float or Transducer)		
P	1/1/1975		151.72	(0.61)	618.28	1	Texas Water Development Board	Recorder (Float or Transducer)		
P	1/5/1975		151.53	(0.19)	618.47	1	Texas Water Development Board	Recorder (Float or Transducer)		
P	1/10/1975		151.5	(0.03)	618.5	1	Texas Water Development Board	Recorder (Float or Transducer)		
P	1/15/1975		151.73	0.23	618.27	1	Texas Water Development Board	Recorder (Float or Transducer)		
P	1/16/1975		151.89	0.16	618.11	1	Texas Water Development Board	Steel Tape		
P	1/20/1975		152.07	0.18	617.93	1	Texas Water Development Board	Recorder (Float or Transducer)		
P	1/25/1975		152.14	0.07	617.86	1	Texas Water Development Board	Recorder (Float or Transducer)		
P	2/1/1975		152.25	0.11	617.75	1	Texas Water Development Board	Recorder (Float or Transducer)		

Status Code	Date	Time	Water Level (ft. below land surface)	Change value in ( ) indicates rise in level	Water Elevation (ft. above sea level)	Meas #	Measuring Agency	Method	Remark ID	Comments
P	2/5/1975		150.03	(2.22)	619.97	1	Texas Water Development Board	Recorder (Float or Transducer)		
P	2/10/1975		149.49	(0.54)	620.51	1	Texas Water Development Board	Recorder (Float or Transducer)		
P	2/15/1975		150.33	0.84	619.67	1	Texas Water Development Board	Recorder (Float or Transducer)		
P	2/20/1975		150.53	0.20	619.47	1	Texas Water Development Board	Recorder (Float or Transducer)		
P	2/25/1975		150.9	0.37	619.1	1	Texas Water Development Board	Recorder (Float or Transducer)		
P	2/28/1975		151.1	0.20	618.9	1	Texas Water Development Board	Recorder (Float or Transducer)		
P	3/1/1975		151.17	0.07	618.83	1	Texas Water Development Board	Recorder (Float or Transducer)		
P	3/5/1975		151.65	0.48	618.35	1	Texas Water Development Board	Recorder (Float or Transducer)		
P	3/10/1975		151.93	0.28	618.07	1	Texas Water Development Board	Recorder (Float or Transducer)		
P	3/15/1975		152.05	0.12	617.95	1	Texas Water Development Board	Recorder (Float or Transducer)		
P	3/20/1975		152.01	(0.04)	617.99	1	Texas Water Development Board	Steel Tape		
P	3/25/1975		152.03	0.02	617.97	1	Texas Water Development Board	Recorder (Float or Transducer)		
P	4/1/1975		151.94	(0.09)	618.06	1	Texas Water Development Board	Recorder (Float or Transducer)		
P	4/5/1975		152.13	0.19	617.87	1	Texas Water Development Board	Recorder (Float or Transducer)		
P	4/10/1975		151.67	(0.46)	618.33	1	Texas Water Development Board	Recorder (Float or Transducer)		
P	4/15/1975		151.48	(0.19)	618.52	1	Texas Water Development Board	Recorder (Float or Transducer)		
P	4/20/1975		151.5	0.02	618.5	1	Texas Water Development Board	Recorder (Float or Transducer)		
P	4/25/1975		151.67	0.17	618.33	1	Texas Water Development Board	Recorder (Float or Transducer)		
P	5/1/1975		151.97	0.30	618.03	1	Texas Water Development Board	Recorder (Float or Transducer)		
P	5/5/1975		152.03	0.06	617.97	1	Texas Water Development Board	Recorder (Float or Transducer)		

Status Code	Date	Time	Water Level (ft. below land surface)	Change value in ( ) indicates rise in level	Water Elevation (ft. above sea level)	Meas #	Measuring Agency	Method	Remark ID	Comments
P	5/10/1975		151.78	(0.25)	618.22	1	Texas Water Development Board	Recorder (Float or Transducer)		
P	5/15/1975		151.02	(0.76)	618.98	1	Texas Water Development Board	Recorder (Float or Transducer)		
P	5/19/1975		151.06	0.04	618.94	1	Texas Water Development Board	Steel Tape		
P	5/20/1975		150.93	(0.13)	619.07	1	Texas Water Development Board	Recorder (Float or Transducer)		
P	5/25/1975		148.33	(2.60)	621.67	1	Texas Water Development Board	Recorder (Float or Transducer)		
P	8/13/1975		154.1	5.77	615.9	1	Texas Water Development Board	Steel Tape		
P	8/15/1975		154.2	0.10	615.8	1	Texas Water Development Board	Recorder (Float or Transducer)		
P	8/20/1975		154.69	0.49	615.31	1	Texas Water Development Board	Recorder (Float or Transducer)		
P	8/25/1975		155.17	0.48	614.83	1	Texas Water Development Board	Recorder (Float or Transducer)		
P	9/1/1975		155.84	0.67	614.16	1	Texas Water Development Board	Recorder (Float or Transducer)		
P	9/5/1975		156.23	0.39	613.77	1	Texas Water Development Board	Recorder (Float or Transducer)		
P	9/10/1975		156.57	0.34	613.43	1	Texas Water Development Board	Recorder (Float or Transducer)		
P	9/15/1975		156.83	0.26	613.17	1	Texas Water Development Board	Recorder (Float or Transducer)		
P	9/20/1975		156.72	(0.11)	613.28	1	Texas Water Development Board	Recorder (Float or Transducer)		
P	9/25/1975		156.87	0.15	613.13	1	Texas Water Development Board	Recorder (Float or Transducer)		
P	10/1/1975		157	0.13	613	1	Texas Water Development Board	Recorder (Float or Transducer)		
P	10/5/1975		157.24	0.24	612.76	1	Texas Water Development Board	Recorder (Float or Transducer)		
P	10/10/1975		157.3	0.06	612.7	1	Texas Water Development Board	Recorder (Float or Transducer)		
P	10/15/1975		157.17	(0.13)	612.83	1	Texas Water Development Board	Recorder (Float or Transducer)		
P	10/20/1975		157.27	0.10	612.73	1	Texas Water Development Board	Recorder (Float or Transducer)		
P	10/22/1975		157.05	(0.22)	612.95	1	Texas Water Development Board	Steel Tape		

Status Code	Date	Time	Water Level (ft. below land surface)	Change value in ( ) indicates rise in level	Water Elevation (ft. above sea level)	Meas #	Measuring Agency	Method	Remark ID	Comments
P	10/25/1975		157.24	0.19	612.76	1	Texas Water Development Board	Recorder (Float or Transducer)		
P	11/1/1975		157.18	(0.06)	612.82	1	Texas Water Development Board	Recorder (Float or Transducer)		
P	11/5/1975		157.18	0.00	612.82	1	Texas Water Development Board	Recorder (Float or Transducer)		
P	11/10/1975		157.03	(0.15)	612.97	1	Texas Water Development Board	Recorder (Float or Transducer)		
P	11/15/1975		157.18	0.15	612.82	1	Texas Water Development Board	Recorder (Float or Transducer)		
P	11/20/1975		157.24	0.06	612.76	1	Texas Water Development Board	Steel Tape		
P	11/25/1975		156.95	(0.29)	613.05	1	Texas Water Development Board	Recorder (Float or Transducer)		
P	12/1/1975		157.15	0.20	612.85	1	Texas Water Development Board	Recorder (Float or Transducer)		
P	12/5/1975		157.01	(0.14)	612.99	1	Texas Water Development Board	Recorder (Float or Transducer)		
P	12/10/1975		157.12	0.11	612.88	1	Texas Water Development Board	Recorder (Float or Transducer)		
P	12/15/1975		157.18	0.06	612.82	1	Texas Water Development Board	Recorder (Float or Transducer)		
P	12/20/1975		157.37	0.19	612.63	1	Texas Water Development Board	Recorder (Float or Transducer)		
P	12/25/1975		157.04	(0.33)	612.96	1	Texas Water Development Board	Recorder (Float or Transducer)		
P	1/1/1976		156.9	(0.14)	613.1	1	Texas Water Development Board	Recorder (Float or Transducer)		
P	1/5/1976		157.22	0.32	612.78	1	Texas Water Development Board	Recorder (Float or Transducer)		
P	1/10/1976		157.44	0.22	612.56	1	Texas Water Development Board	Recorder (Float or Transducer)		
P	1/15/1976		157.88	0.44	612.12	1	Texas Water Development Board	Recorder (Float or Transducer)		
P	1/20/1976		158.22	0.34	611.78	1	Texas Water Development Board	Recorder (Float or Transducer)		
P	1/25/1976		157.89	(0.33)	612.11	1	Texas Water Development Board	Recorder (Float or Transducer)		
P	2/1/1976		157.99	0.10	612.01	1	Texas Water Development Board	Recorder (Float or Transducer)		

Status Code	Date	Time	Water Level (ft. below land surface)	Change value in ( ) indicates rise in level	Water Elevation (ft. above sea level)	Meas #	Measuring Agency	Method	Remark ID	Comments
P	2/5/1976		157.98	(0.01)	612.02	1	Texas Water Development Board	Recorder (Float or Transducer)		
P	2/10/1976		157.95	(0.03)	612.05	1	Texas Water Development Board	Recorder (Float or Transducer)		
P	2/15/1976		157.88	(0.07)	612.12	1	Texas Water Development Board	Recorder (Float or Transducer)		
P	2/20/1976		157.72	(0.16)	612.28	1	Texas Water Development Board	Recorder (Float or Transducer)		
P	2/25/1976		157.93	0.21	612.07	1	Texas Water Development Board	Recorder (Float or Transducer)		
P	2/29/1976		157.72	(0.21)	612.28	1	Texas Water Development Board	Recorder (Float or Transducer)		
P	3/1/1976		157.72	0.00	612.28	1	Texas Water Development Board	Recorder (Float or Transducer)		
P	3/5/1976		157.7	(0.02)	612.3	1	Texas Water Development Board	Recorder (Float or Transducer)		
P	3/29/1976		158.12	0.42	611.88	1	Texas Water Development Board	Steel Tape		
P	4/1/1976		158.35	0.23	611.65	1	Texas Water Development Board	Recorder (Float or Transducer)		
P	4/5/1976		158.35	0.00	611.65	1	Texas Water Development Board	Recorder (Float or Transducer)		
P	4/10/1976		158.18	(0.17)	611.82	1	Texas Water Development Board	Recorder (Float or Transducer)		
P	4/15/1976		158.1	(0.08)	611.9	1	Texas Water Development Board	Recorder (Float or Transducer)		
P	4/20/1976		157.61	(0.49)	612.39	1	Texas Water Development Board	Recorder (Float or Transducer)		
P	4/25/1976		157.61	0.00	612.39	1	Texas Water Development Board	Recorder (Float or Transducer)		
P	5/1/1976		157.52	(0.09)	612.48	1	Texas Water Development Board	Recorder (Float or Transducer)		
P	5/5/1976		157.6	0.08	612.4	1	Texas Water Development Board	Recorder (Float or Transducer)		
P	5/10/1976		157.32	(0.28)	612.68	1	Texas Water Development Board	Recorder (Float or Transducer)		
P	5/15/1976		157.09	(0.23)	612.91	1	Texas Water Development Board	Recorder (Float or Transducer)		
P	5/20/1976		157.29	0.20	612.71	1	Texas Water Development Board	Recorder (Float or Transducer)		

Status Code	Date	Time	Water Level (ft. below land surface)	Change value in ( ) indicates rise in level	Water Elevation (ft. above sea level)	Meas #	Measuring Agency	Method	Remark ID	Comments
P	5/25/1976		157.3	0.01	612.7	1	Texas Water Development Board	Steel Tape		
P	6/1/1976		156.98	(0.32)	613.02	1	Texas Water Development Board	Recorder (Float or Transducer)		
P	6/5/1976		157.02	0.04	612.98	1	Texas Water Development Board	Recorder (Float or Transducer)		
P	6/10/1976		157.17	0.15	612.83	1	Texas Water Development Board	Recorder (Float or Transducer)		
P	6/15/1976		157.4	0.23	612.6	1	Texas Water Development Board	Recorder (Float or Transducer)		
P	6/20/1976		157.73	0.33	612.27	1	Texas Water Development Board	Recorder (Float or Transducer)		
P	6/25/1976		157.88	0.15	612.12	1	Texas Water Development Board	Recorder (Float or Transducer)		
P	7/1/1976		157.75	(0.13)	612.25	1	Texas Water Development Board	Recorder (Float or Transducer)		
P	7/5/1976		156.52	(1.23)	613.48	1	Texas Water Development Board	Recorder (Float or Transducer)		
P	7/10/1976		156.55	0.03	613.45	1	Texas Water Development Board	Recorder (Float or Transducer)		
P	7/15/1976		156.16	(0.39)	613.84	1	Texas Water Development Board	Recorder (Float or Transducer)		
P	7/20/1976		155.95	(0.21)	614.05	1	Texas Water Development Board	Recorder (Float or Transducer)		
P	7/25/1976		156.2	0.25	613.8	1	Texas Water Development Board	Recorder (Float or Transducer)		
P	8/1/1976		156.56	0.36	613.44	1	Texas Water Development Board	Recorder (Float or Transducer)		
P	8/5/1976		156.85	0.29	613.15	1	Texas Water Development Board	Recorder (Float or Transducer)		
P	8/6/1976		157	0.15	613	1	Texas Water Development Board	Steel Tape		
P	8/10/1976		156.97	(0.03)	613.03	1	Texas Water Development Board	Recorder (Float or Transducer)		
P	8/15/1976		157.18	0.21	612.82	1	Texas Water Development Board	Recorder (Float or Transducer)		
P	8/20/1976		157.67	0.49	612.33	1	Texas Water Development Board	Recorder (Float or Transducer)		
P	8/25/1976		158.07	0.40	611.93	1	Texas Water Development Board	Recorder (Float or Transducer)		

Status Code	Date	Time	Water Level (ft. below land surface)	Change value in ( ) indicates rise in level	Water Elevation (ft. above sea level)	Meas #	Measuring Agency	Method	Remark ID	Comments
P	9/1/1976		158.54	0.47	611.46	1	Texas Water Development Board	Recorder (Float or Transducer)		
P	9/5/1976		158.02	(0.52)	611.98	1	Texas Water Development Board	Recorder (Float or Transducer)		
P	9/10/1976		158.19	0.17	611.81	1	Texas Water Development Board	Recorder (Float or Transducer)		
P	9/15/1976		158.46	0.27	611.54	1	Texas Water Development Board	Recorder (Float or Transducer)		
P	9/20/1976		158.72	0.26	611.28	1	Texas Water Development Board	Recorder (Float or Transducer)		
P	9/25/1976		158.97	0.25	611.03	1	Texas Water Development Board	Recorder (Float or Transducer)		
P	9/27/1976		159.12	0.15	610.88	1	Texas Water Development Board	Steel Tape		
P	10/1/1976		159.19	0.07	610.81	1	Texas Water Development Board	Recorder (Float or Transducer)		
P	10/5/1976		159.3	0.11	610.7	1	Texas Water Development Board	Recorder (Float or Transducer)		
P	10/10/1976		159.28	(0.02)	610.72	1	Texas Water Development Board	Recorder (Float or Transducer)		
P	10/15/1976		159.26	(0.02)	610.74	1	Texas Water Development Board	Recorder (Float or Transducer)		
P	10/20/1976		159.4	0.14	610.6	1	Texas Water Development Board	Recorder (Float or Transducer)		
P	10/25/1976		159.13	(0.27)	610.87	1	Texas Water Development Board	Recorder (Float or Transducer)		
P	11/1/1976		158.77	(0.36)	611.23	1	Texas Water Development Board	Recorder (Float or Transducer)		
P	11/5/1976		158.38	(0.39)	611.62	1	Texas Water Development Board	Recorder (Float or Transducer)		
P	11/10/1976		157.92	(0.46)	612.08	1	Texas Water Development Board	Recorder (Float or Transducer)		
P	11/15/1976		157.72	(0.20)	612.28	1	Texas Water Development Board	Recorder (Float or Transducer)		
P	11/20/1976		157.5	(0.22)	612.5	1	Texas Water Development Board	Recorder (Float or Transducer)		
P	11/25/1976		157.28	(0.22)	612.72	1	Texas Water Development Board	Recorder (Float or Transducer)		
P	12/1/1976		157.5	0.22	612.5	1	Texas Water Development Board	Recorder (Float or Transducer)		

Status Code	Date	Time	Water Level (ft. below land surface)	Change value in ( ) indicates rise in level	Water Elevation (ft. above sea level)	Meas #	Measuring Agency	Method	Remark ID	Comments
P	12/5/1976		157.25	(0.25)	612.75	1	Texas Water Development Board	Recorder (Float or Transducer)		
P	12/10/1976		157.42	0.17	612.58	1	Texas Water Development Board	Recorder (Float or Transducer)		
P	12/15/1976		157.35	(0.07)	612.65	1	Texas Water Development Board	Recorder (Float or Transducer)		
P	12/20/1976		157.35	0.00	612.65	1	Texas Water Development Board	Recorder (Float or Transducer)		
P	12/25/1976		157.24	(0.11)	612.76	1	Texas Water Development Board	Recorder (Float or Transducer)		
P	1/1/1977		157.24	0.00	612.76	1	Texas Water Development Board	Recorder (Float or Transducer)		
P	1/5/1977		157.18	(0.06)	612.82	1	Texas Water Development Board	Recorder (Float or Transducer)		
P	1/10/1977		157.38	0.20	612.62	1	Texas Water Development Board	Recorder (Float or Transducer)		
P	1/15/1977		157.17	(0.21)	612.83	1	Texas Water Development Board	Recorder (Float or Transducer)		
P	1/20/1977		157.32	0.15	612.68	1	Texas Water Development Board	Recorder (Float or Transducer)		
P	1/25/1977		157.14	(0.18)	612.86	1	Texas Water Development Board	Recorder (Float or Transducer)		
P	2/1/1977		157.17	0.03	612.83	1	Texas Water Development Board	Recorder (Float or Transducer)		
P	2/5/1977		157.14	(0.03)	612.86	1	Texas Water Development Board	Recorder (Float or Transducer)		
P	2/10/1977		156.94	(0.20)	613.06	1	Texas Water Development Board	Recorder (Float or Transducer)		
P	2/15/1977		157.09	0.15	612.91	1	Texas Water Development Board	Recorder (Float or Transducer)		
P	2/20/1977		156.88	(0.21)	613.12	1	Texas Water Development Board	Recorder (Float or Transducer)		
P	2/25/1977		156.6	(0.28)	613.4	1	Texas Water Development Board	Recorder (Float or Transducer)		
P	2/28/1977		156.94	0.34	613.06	1	Texas Water Development Board	Recorder (Float or Transducer)		
P	3/1/1977		156.78	(0.16)	613.22	1	Texas Water Development Board	Recorder (Float or Transducer)		

Status Code	Date	Time	Water Level (ft. below land surface)	Change value in ( ) indicates rise in level	Water Elevation (ft. above sea level)	Meas #	Measuring Agency	Method	Remark ID	Comments
P	3/5/1977		156.83	0.05	613.17	1	Texas Water Development Board	Recorder (Float or Transducer)		
P	3/10/1977		156.52	(0.31)	613.48	1	Texas Water Development Board	Recorder (Float or Transducer)		
P	3/15/1977		156.59	0.07	613.41	1	Texas Water Development Board	Recorder (Float or Transducer)		
P	3/16/1977		156.75	0.16	613.25	1	Texas Water Development Board	Steel Tape		
P	3/20/1977		156.73	(0.02)	613.27	1	Texas Water Development Board	Recorder (Float or Transducer)		
P	3/25/1977		156.87	0.14	613.13	1	Texas Water Development Board	Recorder (Float or Transducer)		
P	4/1/1977		156.32	(0.55)	613.68	1	Texas Water Development Board	Recorder (Float or Transducer)		
P	4/5/1977		156.53	0.21	613.47	1	Texas Water Development Board	Recorder (Float or Transducer)		
P	4/10/1977		156.92	0.39	613.08	1	Texas Water Development Board	Recorder (Float or Transducer)		
P	4/15/1977		154.4	(2.52)	615.6	1	Texas Water Development Board	Recorder (Float or Transducer)		
P	4/20/1977		152.87	(1.53)	617.13	1	Texas Water Development Board	Recorder (Float or Transducer)		
P	4/25/1977		153.59	0.72	616.41	1	Texas Water Development Board	Recorder (Float or Transducer)		
P	5/1/1977		153.47	(0.12)	616.53	1	Texas Water Development Board	Recorder (Float or Transducer)		
P	5/5/1977		153.65	0.18	616.35	1	Texas Water Development Board	Recorder (Float or Transducer)		
P	5/10/1977		153.8	0.15	616.2	1	Texas Water Development Board	Recorder (Float or Transducer)		
P	5/15/1977		153.62	(0.18)	616.38	1	Texas Water Development Board	Recorder (Float or Transducer)		
P	5/20/1977		153.92	0.30	616.08	1	Texas Water Development Board	Steel Tape		
P	5/25/1977		154.34	0.42	615.66	1	Texas Water Development Board	Recorder (Float or Transducer)		
P	6/1/1977		155.34	1.00	614.66	1	Texas Water Development Board	Recorder (Float or Transducer)		
P	6/5/1977		155.68	0.34	614.32	1	Texas Water Development Board	Recorder (Float or Transducer)		

Status Code	Date	Time	Water Level (ft. below land surface)	Change value in ( ) indicates rise in level	Water Elevation (ft. above sea level)	Meas #	Measuring Agency	Method	Remark ID	Comments
P	6/10/1977		156.15	0.47	613.85	1	Texas Water Development Board	Recorder (Float or Transducer)		
P	6/15/1977		156.53	0.38	613.47	1	Texas Water Development Board	Recorder (Float or Transducer)		
P	6/20/1977		156.88	0.35	613.12	1	Texas Water Development Board	Recorder (Float or Transducer)		
P	6/25/1977		157.28	0.40	612.72	1	Texas Water Development Board	Recorder (Float or Transducer)		
P	7/1/1977		157.6	0.32	612.4	1	Texas Water Development Board	Recorder (Float or Transducer)		
P	7/5/1977		157.88	0.28	612.12	1	Texas Water Development Board	Recorder (Float or Transducer)		
P	7/10/1977		158.34	0.46	611.66	1	Texas Water Development Board	Recorder (Float or Transducer)		
P	7/15/1977		158.78	0.44	611.22	1	Texas Water Development Board	Recorder (Float or Transducer)		
P	7/20/1977		159.16	0.38	610.84	1	Texas Water Development Board	Recorder (Float or Transducer)		
P	7/21/1977		159.26	0.10	610.74	1	Texas Water Development Board	Steel Tape		
P	7/25/1977		159.44	0.18	610.56	1	Texas Water Development Board	Recorder (Float or Transducer)		
P	8/1/1977		160.28	0.84	609.72	1	Texas Water Development Board	Recorder (Float or Transducer)		
P	8/5/1977		160.63	0.35	609.37	1	Texas Water Development Board	Recorder (Float or Transducer)		
P	8/10/1977		161.16	0.53	608.84	1	Texas Water Development Board	Recorder (Float or Transducer)		
P	8/15/1977		161.66	0.50	608.34	1	Texas Water Development Board	Recorder (Float or Transducer)		
P	8/20/1977		162.17	0.51	607.83	1	Texas Water Development Board	Recorder (Float or Transducer)		
P	8/25/1977		162.7	0.53	607.3	1	Texas Water Development Board	Recorder (Float or Transducer)		
P	9/1/1977		163.46	0.76	606.54	1	Texas Water Development Board	Recorder (Float or Transducer)		
P	9/5/1977		163.84	0.38	606.16	1	Texas Water Development Board	Recorder (Float or Transducer)		
P	9/10/1977		164.54	0.70	605.46	1	Texas Water Development Board	Recorder (Float or Transducer)		

Status Code	Date	Time	Water Level (ft. below land surface)	Change value in ( ) indicates rise in level	Water Elevation (ft. above sea level)	Meas #	Measuring Agency	Method	Remark ID	Comments
P	9/15/1977		164.78	0.24	605.22	1	Texas Water Development Board	Recorder (Float or Transducer)		
P	9/20/1977		165.02	0.24	604.98	1	Texas Water Development Board	Recorder (Float or Transducer)		
P	9/25/1977		165.18	0.16	604.82	1	Texas Water Development Board	Recorder (Float or Transducer)		
P	10/1/1977		165.31	0.13	604.69	1	Texas Water Development Board	Recorder (Float or Transducer)		
P	10/5/1977		165.62	0.31	604.38	1	Texas Water Development Board	Recorder (Float or Transducer)		
P	10/10/1977		165.58	(0.04)	604.42	1	Texas Water Development Board	Recorder (Float or Transducer)		
P	10/15/1977		165.84	0.26	604.16	1	Texas Water Development Board	Recorder (Float or Transducer)		
P	10/20/1977		165.96	0.12	604.04	1	Texas Water Development Board	Recorder (Float or Transducer)		
P	10/25/1977		165.92	(0.04)	604.08	1	Texas Water Development Board	Recorder (Float or Transducer)		
P	10/26/1977		165.91	(0.01)	604.09	1	Texas Water Development Board	Steel Tape		
P	11/1/1977		165.58	(0.33)	604.42	1	Texas Water Development Board	Recorder (Float or Transducer)		
P	11/5/1977		165.65	0.07	604.35	1	Texas Water Development Board	Recorder (Float or Transducer)		
P	11/10/1977		165.78	0.13	604.22	1	Texas Water Development Board	Recorder (Float or Transducer)		
P	11/15/1977		165.45	(0.33)	604.55	1	Texas Water Development Board	Recorder (Float or Transducer)		
P	11/20/1977		165.42	(0.03)	604.58	1	Texas Water Development Board	Recorder (Float or Transducer)		
P	11/25/1977		165.45	0.03	604.55	1	Texas Water Development Board	Recorder (Float or Transducer)		
P	12/1/1977		165.58	0.13	604.42	1	Texas Water Development Board	Recorder (Float or Transducer)		
P	12/5/1977		165.48	(0.10)	604.52	1	Texas Water Development Board	Recorder (Float or Transducer)		
P	12/10/1977		165.81	0.33	604.19	1	Texas Water Development Board	Recorder (Float or Transducer)		
P	12/15/1977		165.58	(0.23)	604.42	1	Texas Water Development Board	Recorder (Float or Transducer)		

Status Code	Date	Time	Water Level (ft. below land surface)	Change value in ( ) indicates rise in level	Water Elevation (ft. above sea level)	Meas #	Measuring Agency	Method	Remark ID	Comments
P	12/20/1977		165.78	0.20	604.22	1	Texas Water Development Board	Recorder (Float or Transducer)		
P	12/25/1977		165.81	0.03	604.19	1	Texas Water Development Board	Recorder (Float or Transducer)		
P	1/1/1978		165.81	0.00	604.19	1	Texas Water Development Board	Recorder (Float or Transducer)		
P	1/5/1978		165.75	(0.06)	604.25	1	Texas Water Development Board	Recorder (Float or Transducer)		
P	1/10/1978		165.88	0.13	604.12	1	Texas Water Development Board	Recorder (Float or Transducer)		
P	1/15/1978		165.75	(0.13)	604.25	1	Texas Water Development Board	Recorder (Float or Transducer)		
P	1/20/1978		165.75	0.00	604.25	1	Texas Water Development Board	Recorder (Float or Transducer)		
P	1/25/1978		165.55	(0.20)	604.45	1	Texas Water Development Board	Recorder (Float or Transducer)		
P	2/1/1978		165.71	0.16	604.29	1	Texas Water Development Board	Recorder (Float or Transducer)		
P	2/5/1978		165.94	0.23	604.06	1	Texas Water Development Board	Recorder (Float or Transducer)		
P	2/10/1978		165.68	(0.26)	604.32	1	Texas Water Development Board	Recorder (Float or Transducer)		
P	2/15/1978		165.61	(0.07)	604.39	1	Texas Water Development Board	Recorder (Float or Transducer)		
P	2/20/1978		165.58	(0.03)	604.42	1	Texas Water Development Board	Recorder (Float or Transducer)		
P	2/25/1978		165.55	(0.03)	604.45	1	Texas Water Development Board	Recorder (Float or Transducer)		
P	3/1/1978		165.61	0.06	604.39	1	Texas Water Development Board	Recorder (Float or Transducer)		
P	3/5/1978		165.68	0.07	604.32	1	Texas Water Development Board	Recorder (Float or Transducer)		
P	3/8/1978		165.88	0.20	604.12	1	Texas Water Development Board	Steel Tape		
P	3/10/1978		165.55	(0.33)	604.45	1	Texas Water Development Board	Recorder (Float or Transducer)		
P	3/15/1978		165.75	0.20	604.25	1	Texas Water Development Board	Recorder (Float or Transducer)		
P	3/20/1978		166.04	0.29	603.96	1	Texas Water Development Board	Recorder (Float or Transducer)		

Status Code	Date	Time	Water Level (ft. below land surface)	Change value in ( ) indicates rise in level	Water Elevation (ft. above sea level)	Meas #	Measuring Agency	Method	Remark ID	Comments
P	3/25/1978		166.3	0.26	603.7	1	Texas Water Development Board	Recorder (Float or Transducer)		
P	4/1/1978		166.73	0.43	603.27	1	Texas Water Development Board	Recorder (Float or Transducer)		
P	4/5/1978		167.09	0.36	602.91	1	Texas Water Development Board	Recorder (Float or Transducer)		
P	4/10/1978		167.32	0.23	602.68	1	Texas Water Development Board	Recorder (Float or Transducer)		
P	4/15/1978		167.85	0.53	602.15	1	Texas Water Development Board	Recorder (Float or Transducer)		
P	4/20/1978		168.27	0.42	601.73	1	Texas Water Development Board	Recorder (Float or Transducer)		
P	4/25/1978		168.73	0.46	601.27	1	Texas Water Development Board	Recorder (Float or Transducer)		
P	5/1/1978		168.96	0.23	601.04	1	Texas Water Development Board	Recorder (Float or Transducer)		
P	5/5/1978		169.16	0.20	600.84	1	Texas Water Development Board	Recorder (Float or Transducer)		
P	5/10/1978		169.68	0.52	600.32	1	Texas Water Development Board	Recorder (Float or Transducer)		
P	5/15/1978		169.95	0.27	600.05	1	Texas Water Development Board	Recorder (Float or Transducer)		
P	5/20/1978		170.4	0.45	599.6	1	Texas Water Development Board	Recorder (Float or Transducer)		
P	5/25/1978		170.7	0.30	599.3	1	Texas Water Development Board	Recorder (Float or Transducer)		
P	6/1/1978		171.19	0.49	598.81	1	Texas Water Development Board	Recorder (Float or Transducer)		
P	6/5/1978		171.26	0.07	598.74	1	Texas Water Development Board	Recorder (Float or Transducer)		
P	6/10/1978		170.93	(0.33)	599.07	1	Texas Water Development Board	Recorder (Float or Transducer)		
P	6/15/1978		171.22	0.29	598.78	1	Texas Water Development Board	Recorder (Float or Transducer)		
P	6/20/1978		171.68	0.46	598.32	1	Texas Water Development Board	Recorder (Float or Transducer)		
P	6/25/1978		172.11	0.43	597.89	1	Texas Water Development Board	Recorder (Float or Transducer)		
P	6/28/1978		173.06	0.95	596.94	1	Texas Water Development Board	Steel Tape		

Status Code	Date	Time	Water Level (ft. below land surface)	Change value in ( ) indicates rise in level	Water Elevation (ft. above sea level)	Meas #	Measuring Agency	Method	Remark ID	Comments
P	6/30/1978		173.16	0.10	596.84	1	Texas Water Development Board	Recorder (Float or Transducer)		
P	7/1/1978		173.23	0.07	596.77	1	Texas Water Development Board	Recorder (Float or Transducer)		
P	7/5/1978		173.65	0.42	596.35	1	Texas Water Development Board	Recorder (Float or Transducer)		
P	7/10/1978		174.08	0.43	595.92	1	Texas Water Development Board	Recorder (Float or Transducer)		
P	7/15/1978		174.47	0.39	595.53	1	Texas Water Development Board	Recorder (Float or Transducer)		
P	7/20/1978		174.8	0.33	595.2	1	Texas Water Development Board	Recorder (Float or Transducer)		
P	7/25/1978		175.06	0.26	594.94	1	Texas Water Development Board	Recorder (Float or Transducer)		
P	7/30/1978		175.03	(0.03)	594.97	1	Texas Water Development Board	Recorder (Float or Transducer)		
P	8/1/1978		174.93	(0.10)	595.07	1	Texas Water Development Board	Recorder (Float or Transducer)		
P	8/5/1978		170.2	(4.73)	599.8	1	Texas Water Development Board	Recorder (Float or Transducer)		
P	8/10/1978		170.67	0.47	599.33	1	Texas Water Development Board	Recorder (Float or Transducer)		
P	8/15/1978		171	0.33	599	1	Texas Water Development Board	Recorder (Float or Transducer)		
P	8/20/1978		171.39	0.39	598.61	1	Texas Water Development Board	Recorder (Float or Transducer)		
P	8/25/1978		171.78	0.39	598.22	1	Texas Water Development Board	Recorder (Float or Transducer)		
P	8/30/1978		172.15	0.37	597.85	1	Texas Water Development Board	Recorder (Float or Transducer)		
P	9/1/1978		172.5	0.35	597.5	1	Texas Water Development Board	Recorder (Float or Transducer)		
P	9/5/1978		172.9	0.40	597.1	1	Texas Water Development Board	Recorder (Float or Transducer)		
P	9/10/1978		172.37	(0.53)	597.63	1	Texas Water Development Board	Recorder (Float or Transducer)		
P	9/14/1978		172.47	0.10	597.53	1	Texas Water Development Board	Steel Tape		
P	9/15/1978		172.37	(0.10)	597.63	1	Texas Water Development Board	Recorder (Float or Transducer)		

Status Code	Date	Time	Water Level (ft. below land surface)	Change value in ( ) indicates rise in level	Water Elevation (ft. above sea level)	Meas #	Measuring Agency	Method	Remark ID	Comments
P	9/20/1978		172.64	0.27	597.36	1	Texas Water Development Board	Recorder (Float or Transducer)		
P	9/25/1978		172.93	0.29	597.07	1	Texas Water Development Board	Recorder (Float or Transducer)		
P	9/30/1978		173.16	0.23	596.84	1	Texas Water Development Board	Recorder (Float or Transducer)		
P	10/1/1978		173.16	0.00	596.84	1	Texas Water Development Board	Recorder (Float or Transducer)		
P	10/5/1978		173.32	0.16	596.68	1	Texas Water Development Board	Recorder (Float or Transducer)		
P	10/10/1978		173.36	0.04	596.64	1	Texas Water Development Board	Recorder (Float or Transducer)		
P	10/15/1978		173.55	0.19	596.45	1	Texas Water Development Board	Recorder (Float or Transducer)		
P	10/20/1978		173.55	0.00	596.45	1	Texas Water Development Board	Recorder (Float or Transducer)		
P	10/25/1978		173.46	(0.09)	596.54	1	Texas Water Development Board	Recorder (Float or Transducer)		
P	10/30/1978		173.62	0.16	596.38	1	Texas Water Development Board	Recorder (Float or Transducer)		
P	11/1/1978		173.69	0.07	596.31	1	Texas Water Development Board	Recorder (Float or Transducer)		
P	11/5/1978		173.36	(0.33)	596.64	1	Texas Water Development Board	Recorder (Float or Transducer)		
P	11/10/1978		173.36	0.00	596.64	1	Texas Water Development Board	Recorder (Float or Transducer)		
P	11/15/1978		173.19	(0.17)	596.81	1	Texas Water Development Board	Recorder (Float or Transducer)		
P	11/20/1978		173.32	0.13	596.68	1	Texas Water Development Board	Recorder (Float or Transducer)		
P	11/25/1978		172.96	(0.36)	597.04	1	Texas Water Development Board	Recorder (Float or Transducer)		
P	11/30/1978		173.03	0.07	596.97	1	Texas Water Development Board	Recorder (Float or Transducer)		
P	12/1/1978		172.9	(0.13)	597.1	1	Texas Water Development Board	Recorder (Float or Transducer)		
P	12/5/1978		172.87	(0.03)	597.13	1	Texas Water Development Board	Recorder (Float or Transducer)		

Status Code	Date	Time	Water Level (ft. below land surface)	Change value in ( ) indicates rise in level	Water Elevation (ft. above sea level)	Meas #	Measuring Agency	Method	Remark ID	Comments
P	12/10/1978		173.16	0.29	596.84	1	Texas Water Development Board	Recorder (Float or Transducer)		
P	12/15/1978		172.96	(0.20)	597.04	1	Texas Water Development Board	Recorder (Float or Transducer)		
P	12/20/1978		172.8	(0.16)	597.2	1	Texas Water Development Board	Recorder (Float or Transducer)		
P	12/21/1978		171.55	(1.25)	598.45	1	Texas Water Development Board	Steel Tape		
P	12/25/1978		172.57	1.02	597.43	1	Texas Water Development Board	Recorder (Float or Transducer)		
P	12/30/1978		172.7	0.13	597.3	1	Texas Water Development Board	Recorder (Float or Transducer)		
P	1/5/1979		172.44	(0.26)	597.56	1	Texas Water Development Board	Recorder (Float or Transducer)		
P	1/10/1979		172.31	(0.13)	597.69	1	Texas Water Development Board	Recorder (Float or Transducer)		
P	1/15/1979		171.85	(0.46)	598.15	1	Texas Water Development Board	Recorder (Float or Transducer)		
P	1/20/1979		171.52	(0.33)	598.48	1	Texas Water Development Board	Recorder (Float or Transducer)		
P	1/25/1979		171.52	0.00	598.48	1	Texas Water Development Board	Recorder (Float or Transducer)		
P	1/30/1979		171.72	0.20	598.28	1	Texas Water Development Board	Recorder (Float or Transducer)		
P	2/5/1979		171.39	(0.33)	598.61	1	Texas Water Development Board	Recorder (Float or Transducer)		
P	2/10/1979		170.83	(0.56)	599.17	1	Texas Water Development Board	Recorder (Float or Transducer)		
P	2/15/1979		170.57	(0.26)	599.43	1	Texas Water Development Board	Recorder (Float or Transducer)		
P	2/20/1979		170.57	0.00	599.43	1	Texas Water Development Board	Recorder (Float or Transducer)		
P	2/25/1979		170.67	0.10	599.33	1	Texas Water Development Board	Recorder (Float or Transducer)		
P	3/5/1979		170.54	(0.13)	599.46	1	Texas Water Development Board	Recorder (Float or Transducer)		
P	3/10/1979		170.54	0.00	599.46	1	Texas Water Development Board	Recorder (Float or Transducer)		
P	3/15/1979		170.64	0.10	599.36	1	Texas Water Development Board	Recorder (Float or Transducer)		

Status Code	Date	Time	Water Level (ft. below land surface)	Change value in ( ) indicates rise in level	Water Elevation (ft. above sea level)	Meas #	Measuring Agency	Method	Remark ID	Comments
P	3/20/1979		170.28	(0.36)	599.72	1	Texas Water Development Board	Recorder (Float or Transducer)		
P	3/25/1979		169.46	(0.82)	600.54	1	Texas Water Development Board	Recorder (Float or Transducer)		
P	3/29/1979		169.45	(0.01)	600.55	1	Texas Water Development Board	Steel Tape		
P	3/30/1979		169.23	(0.22)	600.77	1	Texas Water Development Board	Recorder (Float or Transducer)		
P	4/5/1979		168.77	(0.46)	601.23	1	Texas Water Development Board	Recorder (Float or Transducer)		
P	4/10/1979		168.41	(0.36)	601.59	1	Texas Water Development Board	Recorder (Float or Transducer)		
P	4/15/1979		168.76	0.35	601.24	1	Texas Water Development Board	Recorder (Float or Transducer)		
P	4/20/1979		168.57	(0.19)	601.43	1	Texas Water Development Board	Recorder (Float or Transducer)		
P	4/25/1979		168.34	(0.23)	601.66	1	Texas Water Development Board	Recorder (Float or Transducer)		
P	4/30/1979		168.44	0.10	601.56	1	Texas Water Development Board	Recorder (Float or Transducer)		
P	5/5/1979		168.37	(0.07)	601.63	1	Texas Water Development Board	Recorder (Float or Transducer)		
P	5/10/1979		168.37	0.00	601.63	1	Texas Water Development Board	Recorder (Float or Transducer)		
P	5/15/1979		168.4	0.03	601.6	1	Texas Water Development Board	Recorder (Float or Transducer)		
P	5/20/1979		168.37	(0.03)	601.63	1	Texas Water Development Board	Recorder (Float or Transducer)		
P	5/25/1979		168.24	(0.13)	601.76	1	Texas Water Development Board	Recorder (Float or Transducer)		
P	5/30/1979		167.98	(0.26)	602.02	1	Texas Water Development Board	Recorder (Float or Transducer)		
P	6/5/1979		167.26	(0.72)	602.74	1	Texas Water Development Board	Recorder (Float or Transducer)		
P	6/10/1979		167.55	0.29	602.45	1	Texas Water Development Board	Recorder (Float or Transducer)		
P	6/15/1979		167.85	0.30	602.15	1	Texas Water Development Board	Recorder (Float or Transducer)		
P	6/20/1979		168.04	0.19	601.96	1	Texas Water Development Board	Recorder (Float or Transducer)		

Status Code	Date	Time	Water Level (ft. below land surface)	Change value in ( ) indicates rise in level	Water Elevation (ft. above sea level)	Meas #	Measuring Agency	Method	Remark ID	Comments
P	6/25/1979		168.31	0.27	601.69	1	Texas Water Development Board	Recorder (Float or Transducer)		
P	6/30/1979		168.73	0.42	601.27	1	Texas Water Development Board	Recorder (Float or Transducer)		
P	7/5/1979		169.23	0.50	600.77	1	Texas Water Development Board	Recorder (Float or Transducer)		
P	7/10/1979		169.65	0.42	600.35	1	Texas Water Development Board	Recorder (Float or Transducer)		
P	7/15/1979		169.95	0.30	600.05	1	Texas Water Development Board	Recorder (Float or Transducer)		
P	9/18/1979		169.54	(0.41)	600.46	1	Texas Water Development Board	Steel Tape		
P	9/20/1979		172.05	2.51	597.95	1	Texas Water Development Board	Recorder (Float or Transducer)		
P	9/25/1979		172.47	0.42	597.53	1	Texas Water Development Board	Recorder (Float or Transducer)		
P	9/30/1979		172.54	0.07	597.46	1	Texas Water Development Board	Recorder (Float or Transducer)		
P	10/5/1979		172.74	0.20	597.26	1	Texas Water Development Board	Recorder (Float or Transducer)		
P	1/2/1980		170.69	(2.05)	599.31	1	Texas Water Development Board	Steel Tape		
P	1/5/1980		171.98	1.29	598.02	1	Texas Water Development Board	Recorder (Float or Transducer)		
P	1/10/1980		171.88	(0.10)	598.12	1	Texas Water Development Board	Recorder (Float or Transducer)		
P	1/15/1980		172.05	0.17	597.95	1	Texas Water Development Board	Recorder (Float or Transducer)		
P	1/20/1980		172.34	0.29	597.66	1	Texas Water Development Board	Recorder (Float or Transducer)		
P	1/25/1980		172.21	(0.13)	597.79	1	Texas Water Development Board	Recorder (Float or Transducer)		
P	1/30/1980		172.51	0.30	597.49	1	Texas Water Development Board	Recorder (Float or Transducer)		
P	2/5/1980		172.54	0.03	597.46	1	Texas Water Development Board	Recorder (Float or Transducer)		
P	2/10/1980		172.31	(0.23)	597.69	1	Texas Water Development Board	Recorder (Float or Transducer)		
P	2/15/1980		172.05	(0.26)	597.95	1	Texas Water Development Board	Recorder (Float or Transducer)		

Status Code	Date	Time	Water Level (ft. below land surface)	Change value in ( ) indicates rise in level	Water Elevation (ft. above sea level)	Meas #	Measuring Agency	Method	Remark ID	Comments
P	2/20/1980		171.85	(0.20)	598.15	1	Texas Water Development Board	Recorder (Float or Transducer)		
P	2/25/1980		172.05	0.20	597.95	1	Texas Water Development Board	Recorder (Float or Transducer)		
P	3/5/1980		172.05	0.00	597.95	1	Texas Water Development Board	Recorder (Float or Transducer)		
P	3/10/1980		172.01	(0.04)	597.99	1	Texas Water Development Board	Recorder (Float or Transducer)		
P	3/15/1980		172.05	0.04	597.95	1	Texas Water Development Board	Recorder (Float or Transducer)		
P	3/20/1980		171.98	(0.07)	598.02	1	Texas Water Development Board	Recorder (Float or Transducer)		
P	3/21/1980		175.15	3.17	594.85	1	Texas Water Development Board	Steel Tape		
P	3/25/1980		174.61	(0.54)	595.39	1	Texas Water Development Board	Recorder (Float or Transducer)		
P	3/30/1980		174.67	0.06	595.33	1	Texas Water Development Board	Recorder (Float or Transducer)		
P	4/5/1980		174.8	0.13	595.2	1	Texas Water Development Board	Recorder (Float or Transducer)		
P	4/10/1980		175.1	0.30	594.9	1	Texas Water Development Board	Recorder (Float or Transducer)		
P	4/15/1980		174.87	(0.23)	595.13	1	Texas Water Development Board	Recorder (Float or Transducer)		
P	4/20/1980		174.97	0.10	595.03	1	Texas Water Development Board	Recorder (Float or Transducer)		
P	4/25/1980		175.16	0.19	594.84	1	Texas Water Development Board	Recorder (Float or Transducer)		
P	4/30/1980		174.77	(0.39)	595.23	1	Texas Water Development Board	Recorder (Float or Transducer)		
P	5/5/1980		174.54	(0.23)	595.46	1	Texas Water Development Board	Recorder (Float or Transducer)		
P	5/10/1980		173.98	(0.56)	596.02	1	Texas Water Development Board	Recorder (Float or Transducer)		
P	5/15/1980		173.75	(0.23)	596.25	1	Texas Water Development Board	Recorder (Float or Transducer)		
P	5/20/1980		173.88	0.13	596.12	1	Texas Water Development Board	Recorder (Float or Transducer)		
P	5/25/1980		174.15	0.27	595.85	1	Texas Water Development Board	Recorder (Float or Transducer)		

Status Code	Date	Time	Water Level (ft. below land surface)	Change value in ( ) indicates rise in level	Water Elevation (ft. above sea level)	Meas #	Measuring Agency	Method	Remark ID	Comments
P	5/30/1980		174.48	0.33	595.52	1	Texas Water Development Board	Recorder (Float or Transducer)		
P	6/5/1980		174.84	0.36	595.16	1	Texas Water Development Board	Recorder (Float or Transducer)		
P	6/10/1980		175.16	0.32	594.84	1	Texas Water Development Board	Recorder (Float or Transducer)		
P	6/15/1980		175.75	0.59	594.25	1	Texas Water Development Board	Recorder (Float or Transducer)		
P	6/20/1980		176.28	0.53	593.72	1	Texas Water Development Board	Recorder (Float or Transducer)		
P	6/25/1980		177.03	0.75	592.97	1	Texas Water Development Board	Recorder (Float or Transducer)		
P	7/10/1980		172.26	(4.77)	597.74	1	Texas Water Development Board	Steel Tape		
P	7/15/1980		179.13	6.87	590.87	1	Texas Water Development Board	Recorder (Float or Transducer)		
P	7/20/1980		180.28	1.15	589.72	1	Texas Water Development Board	Recorder (Float or Transducer)		
P	7/25/1980		181.36	1.08	588.64	1	Texas Water Development Board	Recorder (Float or Transducer)		
P	7/30/1980		182.25	0.89	587.75	1	Texas Water Development Board	Recorder (Float or Transducer)		
P	8/5/1980		183.79	1.54	586.21	1	Texas Water Development Board	Recorder (Float or Transducer)		
P	8/10/1980		184.38	0.59	585.62	1	Texas Water Development Board	Recorder (Float or Transducer)		
P	8/15/1980		185.3	0.92	584.7	1	Texas Water Development Board	Recorder (Float or Transducer)		
P	8/20/1980		186.22	0.92	583.78	1	Texas Water Development Board	Recorder (Float or Transducer)		
P	8/25/1980		187.17	0.95	582.83	1	Texas Water Development Board	Recorder (Float or Transducer)		
P	8/30/1980		188.71	1.54	581.29	1	Texas Water Development Board	Recorder (Float or Transducer)		
P	9/5/1980		190.88	2.17	579.12	1	Texas Water Development Board	Recorder (Float or Transducer)		
P	9/10/1980		182.55	(8.33)	587.45	1	Texas Water Development Board	Recorder (Float or Transducer)		
P	9/15/1980		183.33	0.78	586.67	1	Texas Water Development Board	Recorder (Float or Transducer)		

Status Code	Date	Time	Water Level (ft. below land surface)	Change value in ( ) indicates rise in level	Water Elevation (ft. above sea level)	Meas #	Measuring Agency	Method	Remark ID	Comments
P	9/20/1980		183.99	0.66	586.01	1	Texas Water Development Board	Recorder (Float or Transducer)		
P	9/25/1980		184.22	0.23	585.78	1	Texas Water Development Board	Recorder (Float or Transducer)		
P	9/30/1980		182.32	(1.90)	587.68	1	Texas Water Development Board	Recorder (Float or Transducer)		
P	10/5/1980		181.17	(1.15)	588.83	1	Texas Water Development Board	Recorder (Float or Transducer)		
P	10/10/1980		180.68	(0.49)	589.32	1	Texas Water Development Board	Recorder (Float or Transducer)		
P	10/15/1980		179.2	(1.48)	590.8	1	Texas Water Development Board	Recorder (Float or Transducer)		
P	10/20/1980		178.58	(0.62)	591.42	1	Texas Water Development Board	Recorder (Float or Transducer)		
P	10/25/1980		177.99	(0.59)	592.01	1	Texas Water Development Board	Recorder (Float or Transducer)		
P	10/28/1980		172.98	(5.01)	597.02	1	Texas Water Development Board	Steel Tape		
P	10/30/1980		175.33	2.35	594.67	1	Texas Water Development Board	Recorder (Float or Transducer)		
P	11/5/1980		175.46	0.13	594.54	1	Texas Water Development Board	Recorder (Float or Transducer)		
P	11/10/1980		175.85	0.39	594.15	1	Texas Water Development Board	Recorder (Float or Transducer)		
P	11/15/1980		175.85	0.00	594.15	1	Texas Water Development Board	Recorder (Float or Transducer)		
P	11/20/1980		175.89	0.04	594.11	1	Texas Water Development Board	Recorder (Float or Transducer)		
P	11/25/1980		176.15	0.26	593.85	1	Texas Water Development Board	Recorder (Float or Transducer)		
P	11/30/1980		176.51	0.36	593.49	1	Texas Water Development Board	Recorder (Float or Transducer)		
P	12/5/1980		176.67	0.16	593.33	1	Texas Water Development Board	Recorder (Float or Transducer)		
P	12/10/1980		176.54	(0.13)	593.46	1	Texas Water Development Board	Recorder (Float or Transducer)		
P	12/15/1980		176.93	0.39	593.07	1	Texas Water Development Board	Recorder (Float or Transducer)		
P	12/20/1980		176.54	(0.39)	593.46	1	Texas Water Development Board	Recorder (Float or Transducer)		

Status Code	Date	Time	Water Level (ft. below land surface)	Change value in ( ) indicates rise in level	Water Elevation (ft. above sea level)	Meas #	Measuring Agency	Method	Remark ID	Comments
P	12/25/1980		176.67	0.13	593.33	1	Texas Water Development Board	Recorder (Float or Transducer)		
P	12/30/1980		177.13	0.46	592.87	1	Texas Water Development Board	Recorder (Float or Transducer)		
P	1/5/1981		177.1	(0.03)	592.9	1	Texas Water Development Board	Recorder (Float or Transducer)		
P	1/10/1981		177.17	0.07	592.83	1	Texas Water Development Board	Recorder (Float or Transducer)		
P	1/15/1981		177.13	(0.04)	592.87	1	Texas Water Development Board	Recorder (Float or Transducer)		
P	1/20/1981		177.76	0.63	592.24	1	Texas Water Development Board	Recorder (Float or Transducer)		
P	1/25/1981		177.92	0.16	592.08	1	Texas Water Development Board	Recorder (Float or Transducer)		
P	1/30/1981		177.49	(0.43)	592.51	1	Texas Water Development Board	Recorder (Float or Transducer)		
P	2/4/1981		172	(5.49)	598	1	Texas Water Development Board	Steel Tape		
P	2/5/1981		174.48	2.48	595.52	1	Texas Water Development Board	Recorder (Float or Transducer)		
P	2/10/1981		173.72	(0.76)	596.28	1	Texas Water Development Board	Recorder (Float or Transducer)		
P	2/15/1981		174.15	0.43	595.85	1	Texas Water Development Board	Recorder (Float or Transducer)		
P	2/20/1981		173.92	(0.23)	596.08	1	Texas Water Development Board	Recorder (Float or Transducer)		
P	3/5/1981		172.67	(1.25)	597.33	1	Texas Water Development Board	Recorder (Float or Transducer)		
P	3/10/1981		173.43	0.76	596.57	1	Texas Water Development Board	Recorder (Float or Transducer)		
P	3/15/1981		172.37	(1.06)	597.63	1	Texas Water Development Board	Recorder (Float or Transducer)		
P	3/20/1981		171.98	(0.39)	598.02	1	Texas Water Development Board	Recorder (Float or Transducer)		
P	3/25/1981		172.21	0.23	597.79	1	Texas Water Development Board	Recorder (Float or Transducer)		
P	3/30/1981		171.75	(0.46)	598.25	1	Texas Water Development Board	Recorder (Float or Transducer)		
P	4/5/1981		173.2	1.45	596.8	1	Texas Water Development Board	Recorder (Float or Transducer)		

Status Code	Date	Time	Water Level (ft. below land surface)	Change value in ( ) indicates rise in level	Water Elevation (ft. above sea level)	Meas #	Measuring Agency	Method	Remark ID	Comments
P	4/6/1981		171.93	(1.27)	598.07	1	Texas Water Development Board	Steel Tape		
P	4/10/1981		172.9	0.97	597.1	1	Texas Water Development Board	Recorder (Float or Transducer)		
P	4/15/1981		173.36	0.46	596.64	1	Texas Water Development Board	Recorder (Float or Transducer)		
P	4/20/1981		172.8	(0.56)	597.2	1	Texas Water Development Board	Recorder (Float or Transducer)		
P	4/25/1981		172.7	(0.10)	597.3	1	Texas Water Development Board	Recorder (Float or Transducer)		
P	4/30/1981		172.87	0.17	597.13	1	Texas Water Development Board	Recorder (Float or Transducer)		
P	5/5/1981		172.74	(0.13)	597.26	1	Texas Water Development Board	Recorder (Float or Transducer)		
P	5/10/1981		173.03	0.29	596.97	1	Texas Water Development Board	Recorder (Float or Transducer)		
P	5/13/1981		172.13	(0.90)	597.87	1	Texas Water Development Board	Steel Tape		
P	5/15/1981		173.16	1.03	596.84	1	Texas Water Development Board	Recorder (Float or Transducer)		
P	5/20/1981		173.49	0.33	596.51	1	Texas Water Development Board	Recorder (Float or Transducer)		
P	5/25/1981		173.1	(0.39)	596.9	1	Texas Water Development Board	Recorder (Float or Transducer)		
P	5/30/1981		173.06	(0.04)	596.94	1	Texas Water Development Board	Recorder (Float or Transducer)		
P	6/5/1981		170.24	(2.82)	599.76	1	Texas Water Development Board	Recorder (Float or Transducer)		
P	6/10/1981		170.11	(0.13)	599.89	1	Texas Water Development Board	Recorder (Float or Transducer)		
P	6/15/1981		168.7	(1.41)	601.3	1	Texas Water Development Board	Recorder (Float or Transducer)		
P	6/20/1981		166.4	(2.30)	603.6	1	Texas Water Development Board	Recorder (Float or Transducer)		
P	6/25/1981		169.16	2.76	600.84	1	Texas Water Development Board	Recorder (Float or Transducer)		
P	6/30/1981		169.98	0.82	600.02	1	Texas Water Development Board	Recorder (Float or Transducer)		
P	8/19/1981		174.04	4.06	595.96	1	Texas Water Development Board	Recorder (Float or Transducer)		

Status Code	Date	Time	Water Level (ft. below land surface)	Change value in ( ) indicates rise in level	Water Elevation (ft. above sea level)	Meas #	Measuring Agency	Method	Remark ID	Comments
P	8/20/1981		175.43	1.39	594.57	1	Texas Water Development Board	Recorder (Float or Transducer)		
P	8/25/1981		176.44	1.01	593.56	1	Texas Water Development Board	Recorder (Float or Transducer)		
P	8/30/1981		177.36	0.92	592.64	1	Texas Water Development Board	Recorder (Float or Transducer)		
P	9/5/1981		177.23	(0.13)	592.77	1	Texas Water Development Board	Recorder (Float or Transducer)		
P	9/10/1981		177.49	0.26	592.51	1	Texas Water Development Board	Recorder (Float or Transducer)		
P	9/15/1981		178.05	0.56	591.95	1	Texas Water Development Board	Recorder (Float or Transducer)		
P	9/25/1981		179.2	1.15	590.8	1	Texas Water Development Board	Recorder (Float or Transducer)		
P	9/30/1981		179.43	0.23	590.57	1	Texas Water Development Board	Recorder (Float or Transducer)		
P	10/15/1981		172.64	(6.79)	597.36	1	Texas Water Development Board	Recorder (Float or Transducer)		
P	10/20/1981		173.52	0.88	596.48	1	Texas Water Development Board	Recorder (Float or Transducer)		
P	10/25/1981		173.29	(0.23)	596.71	1	Texas Water Development Board	Recorder (Float or Transducer)		
P	10/30/1981		173.69	0.40	596.31	1	Texas Water Development Board	Recorder (Float or Transducer)		
P	11/5/1981		173.43	(0.26)	596.57	1	Texas Water Development Board	Recorder (Float or Transducer)		
P	11/10/1981		174.9	1.47	595.1	1	Texas Water Development Board	Recorder (Float or Transducer)		
P	11/15/1981		174.34	(0.56)	595.66	1	Texas Water Development Board	Recorder (Float or Transducer)		
P	11/20/1981		174.74	0.40	595.26	1	Texas Water Development Board	Recorder (Float or Transducer)		
P	11/25/1981		174.34	(0.40)	595.66	1	Texas Water Development Board	Recorder (Float or Transducer)		
P	11/30/1981		173.88	(0.46)	596.12	1	Texas Water Development Board	Recorder (Float or Transducer)		
P	12/5/1981		174.74	0.86	595.26	1	Texas Water Development Board	Recorder (Float or Transducer)		

Texas Water Development Board (TWDB)
Groundwater Database (GWDB)
Well Information Report for State Well Number 58-33-403

Status Code	Date	Time	Water Level (ft. below land surface)	Change value in ( ) indicates rise in level	Water Elevation (ft. above sea level)	Meas #	Measuring Agency	Method	Remark ID	Comments
P	12/10/1981		174.05	(0.69)	595.95	1	Texas Water Development Board	Recorder (Float or Transducer)		
P	12/15/1981		173.36	(0.69)	596.64	1	Texas Water Development Board	Recorder (Float or Transducer)		
P	12/20/1981		173.23	(0.13)	596.77	1	Texas Water Development Board	Recorder (Float or Transducer)		
P	12/25/1981		173.29	0.06	596.71	1	Texas Water Development Board	Recorder (Float or Transducer)		
P	12/30/1981		173.56	0.27	596.44	1	Texas Water Development Board	Recorder (Float or Transducer)		
P	1/5/1982		173.56	0.00	596.44	1	Texas Water Development Board	Recorder (Float or Transducer)		
P	1/10/1982		173.75	0.19	596.25	1	Texas Water Development Board	Recorder (Float or Transducer)		
P	1/15/1982		173.36	(0.39)	596.64	1	Texas Water Development Board	Recorder (Float or Transducer)		
P	1/20/1982		173.69	0.33	596.31	1	Texas Water Development Board	Recorder (Float or Transducer)		
P	1/25/1982		173.75	0.06	596.25	1	Texas Water Development Board	Recorder (Float or Transducer)		
P	1/30/1982		173.75	0.00	596.25	1	Texas Water Development Board	Recorder (Float or Transducer)		
P	2/5/1982		174.61	0.86	595.39	1	Texas Water Development Board	Recorder (Float or Transducer)		
P	2/10/1982		174.97	0.36	595.03	1	Texas Water Development Board	Recorder (Float or Transducer)		
P	2/15/1982		174.83	(0.14)	595.17	1	Texas Water Development Board	Recorder (Float or Transducer)		
P	2/20/1982		175.16	0.33	594.84	1	Texas Water Development Board	Recorder (Float or Transducer)		
P	2/25/1982		175.2	0.04	594.8	1	Texas Water Development Board	Recorder (Float or Transducer)		
P	3/5/1982		174.93	(0.27)	595.07	1	Texas Water Development Board	Recorder (Float or Transducer)		
P	3/10/1982		175.13	0.20	594.87	1	Texas Water Development Board	Recorder (Float or Transducer)		
P	3/15/1982		175.07	(0.06)	594.93	1	Texas Water Development Board	Recorder (Float or Transducer)		

Status Code	Date	Time	Water Level (ft. below land surface)	Change value in ( ) indicates rise in level	Water Elevation (ft. above sea level)	Meas #	Measuring Agency	Method	Remark ID	Comments
P	3/20/1982		175.26	0.19	594.74	1	Texas Water Development Board	Recorder (Float or Transducer)		
P	3/23/1982		175.1	(0.16)	594.9	1	Texas Water Development Board	Recorder (Float or Transducer)		
P	4/15/1982		176.28	1.18	593.72	1	Texas Water Development Board	Recorder (Float or Transducer)		
P	5/15/1982		175.62	(0.66)	594.38	1	Texas Water Development Board	Recorder (Float or Transducer)		
P	6/8/1982		170.01	(5.61)	599.99	1	Texas Water Development Board	Steel Tape		
P	9/8/1982		184.67	14.66	585.33	1	Texas Water Development Board	Steel Tape		
P	9/10/1982		184.75	0.08	585.25	1	Texas Water Development Board	Recorder (Float or Transducer)		
P	9/15/1982		185.42	0.67	584.58	1	Texas Water Development Board	Recorder (Float or Transducer)		
P	9/20/1982		185.83	0.41	584.17	1	Texas Water Development Board	Recorder (Float or Transducer)		
P	9/25/1982		186.14	0.31	583.86	1	Texas Water Development Board	Recorder (Float or Transducer)		
P	9/30/1982		186.32	0.18	583.68	1	Texas Water Development Board	Recorder (Float or Transducer)		
P	10/5/1982		186.44	0.12	583.56	1	Texas Water Development Board	Recorder (Float or Transducer)		
P	10/10/1982		186.35	(0.09)	583.65	1	Texas Water Development Board	Recorder (Float or Transducer)		
P	10/15/1982		186.26	(0.09)	583.74	1	Texas Water Development Board	Recorder (Float or Transducer)		
P	10/20/1982		186.15	(0.11)	583.85	1	Texas Water Development Board	Recorder (Float or Transducer)		
P	10/25/1982		186.08	(0.07)	583.92	1	Texas Water Development Board	Recorder (Float or Transducer)		
P	10/30/1982		185.88	(0.20)	584.12	1	Texas Water Development Board	Recorder (Float or Transducer)		
P	11/5/1982		185.77	(0.11)	584.23	1	Texas Water Development Board	Recorder (Float or Transducer)		
P	11/10/1982		185.57	(0.20)	584.43	1	Texas Water Development Board	Recorder (Float or Transducer)		
P	11/15/1982		185.45	(0.12)	584.55	1	Texas Water Development Board	Recorder (Float or Transducer)		

Status Code	Date	Time	Water Level (ft. below land surface)	Change value in ( ) indicates rise in level	Water Elevation (ft. above sea level)	Meas #	Measuring Agency	Method	Remark ID	Comments
P	11/20/1982		184.92	(0.53)	585.08	1	Texas Water Development Board	Recorder (Float or Transducer)		
P	11/25/1982		184.93	0.01	585.07	1	Texas Water Development Board	Recorder (Float or Transducer)		
P	11/30/1982		184.41	(0.52)	585.59	1	Texas Water Development Board	Recorder (Float or Transducer)		
P	12/3/1982		183.48	(0.93)	586.52	1	Texas Water Development Board	Steel Tape		
P	12/5/1982		184.46	0.98	585.54	1	Texas Water Development Board	Recorder (Float or Transducer)		
P	12/10/1982		184.39	(0.07)	585.61	1	Texas Water Development Board	Recorder (Float or Transducer)		
P	12/15/1982		184.25	(0.14)	585.75	1	Texas Water Development Board	Recorder (Float or Transducer)		
P	12/20/1982		184.17	(0.08)	585.83	1	Texas Water Development Board	Recorder (Float or Transducer)		
P	12/25/1982		183.88	(0.29)	586.12	1	Texas Water Development Board	Recorder (Float or Transducer)		
P	12/30/1982		183.98	0.10	586.02	1	Texas Water Development Board	Recorder (Float or Transducer)		
P	1/5/1983		183.72	(0.26)	586.28	1	Texas Water Development Board	Recorder (Float or Transducer)		
P	1/10/1983		183.4	(0.32)	586.6	1	Texas Water Development Board	Recorder (Float or Transducer)		
P	1/15/1983		183.41	0.01	586.59	1	Texas Water Development Board	Recorder (Float or Transducer)		
P	1/20/1983		183.09	(0.32)	586.91	1	Texas Water Development Board	Recorder (Float or Transducer)		
P	1/25/1983		182.9	(0.19)	587.1	1	Texas Water Development Board	Recorder (Float or Transducer)		
P	1/30/1983		182.72	(0.18)	587.28	1	Texas Water Development Board	Recorder (Float or Transducer)		
P	2/5/1983		182.59	(0.13)	587.41	1	Texas Water Development Board	Recorder (Float or Transducer)		
P	2/10/1983		182.38	(0.21)	587.62	1	Texas Water Development Board	Recorder (Float or Transducer)		
P	2/15/1983		181.98	(0.40)	588.02	1	Texas Water Development Board	Recorder (Float or Transducer)		
P	2/20/1983		181.72	(0.26)	588.28	1	Texas Water Development Board	Recorder (Float or Transducer)		

Status Code	Date	Time	Water Level (ft. below land surface)	Change value in ( ) indicates rise in level	Water Elevation (ft. above sea level)	Meas #	Measuring Agency	Method	Remark ID	Comments
P	2/25/1983		181.58	(0.14)	588.42	1	Texas Water Development Board	Recorder (Float or Transducer)		
P	2/28/1983		181.43	(0.15)	588.57	1	Texas Water Development Board	Recorder (Float or Transducer)		
P	3/5/1983		180.75	(0.68)	589.25	1	Texas Water Development Board	Recorder (Float or Transducer)		
P	3/10/1983		180.77	0.02	589.23	1	Texas Water Development Board	Recorder (Float or Transducer)		
P	3/15/1983		180.45	(0.32)	589.55	1	Texas Water Development Board	Recorder (Float or Transducer)		
P	3/18/1983		180.46	0.01	589.54	1	Texas Water Development Board	Steel Tape		
P	3/20/1983		180.43	(0.03)	589.57	1	Texas Water Development Board	Recorder (Float or Transducer)		
P	3/25/1983		180.22	(0.21)	589.78	1	Texas Water Development Board	Recorder (Float or Transducer)		
P	3/30/1983		180.03	(0.19)	589.97	1	Texas Water Development Board	Recorder (Float or Transducer)		
P	4/5/1983		179.72	(0.31)	590.28	1	Texas Water Development Board	Recorder (Float or Transducer)		
P	4/10/1983		179.95	0.23	590.05	1	Texas Water Development Board	Recorder (Float or Transducer)		
P	4/15/1983		180.15	0.20	589.85	1	Texas Water Development Board	Recorder (Float or Transducer)		
P	4/20/1983		180.12	(0.03)	589.88	1	Texas Water Development Board	Recorder (Float or Transducer)		
P	4/25/1983		180.42	0.30	589.58	1	Texas Water Development Board	Recorder (Float or Transducer)		
P	4/30/1983		180.68	0.26	589.32	1	Texas Water Development Board	Recorder (Float or Transducer)		
P	5/5/1983		181.03	0.35	588.97	1	Texas Water Development Board	Recorder (Float or Transducer)		
P	5/10/1983		181.09	0.06	588.91	1	Texas Water Development Board	Recorder (Float or Transducer)		
P	5/15/1983		179.98	(1.11)	590.02	1	Texas Water Development Board	Recorder (Float or Transducer)		
P	5/20/1983		179.96	(0.02)	590.04	1	Texas Water Development Board	Recorder (Float or Transducer)		
P	5/25/1983		179.3	(0.66)	590.7	1	Texas Water Development Board	Recorder (Float or Transducer)		

Status Code	Date	Time	Water Level (ft. below land surface)	Change value in ( ) indicates rise in level	Water Elevation (ft. above sea level)	Meas #	Measuring Agency	Method	Remark ID	Comments
P	5/30/1983		179.2	(0.10)	590.8	1	Texas Water Development Board	Recorder (Float or Transducer)		
P	6/5/1983		179.45	0.25	590.55	1	Texas Water Development Board	Recorder (Float or Transducer)		
P	6/10/1983		179.16	(0.29)	590.84	1	Texas Water Development Board	Recorder (Float or Transducer)		
P	6/13/1983		179.27	0.11	590.73	1	Texas Water Development Board	Steel Tape		
P	6/15/1983		179.35	0.08	590.65	1	Texas Water Development Board	Recorder (Float or Transducer)		
P	6/20/1983		179.38	0.03	590.62	1	Texas Water Development Board	Recorder (Float or Transducer)		
P	6/25/1983		179.55	0.17	590.45	1	Texas Water Development Board	Recorder (Float or Transducer)		
P	6/30/1983		179.63	0.08	590.37	1	Texas Water Development Board	Recorder (Float or Transducer)		
P	7/5/1983		179.98	0.35	590.02	1	Texas Water Development Board	Recorder (Float or Transducer)		
P	7/10/1983		180.36	0.38	589.64	1	Texas Water Development Board	Recorder (Float or Transducer)		
P	7/15/1983		180.63	0.27	589.37	1	Texas Water Development Board	Recorder (Float or Transducer)		
P	7/20/1983		180.74	0.11	589.26	1	Texas Water Development Board	Recorder (Float or Transducer)		
P	7/25/1983		180.73	(0.01)	589.27	1	Texas Water Development Board	Recorder (Float or Transducer)		
P	7/30/1983		180.99	0.26	589.01	1	Texas Water Development Board	Recorder (Float or Transducer)		
P	8/5/1983		181.33	0.34	588.67	1	Texas Water Development Board	Recorder (Float or Transducer)		
P	8/10/1983		181.52	0.19	588.48	1	Texas Water Development Board	Recorder (Float or Transducer)		
P	8/15/1983		181.58	0.06	588.42	1	Texas Water Development Board	Recorder (Float or Transducer)		
P	8/20/1983		181.63	0.05	588.37	1	Texas Water Development Board	Recorder (Float or Transducer)		
P	8/25/1983		181.73	0.10	588.27	1	Texas Water Development Board	Recorder (Float or Transducer)		
P	8/30/1983		181.89	0.16	588.11	1	Texas Water Development Board	Recorder (Float or Transducer)		

Status Code	Date	Time	Water Level (ft. below land surface)	Change value in ( ) indicates rise in level	Water Elevation (ft. above sea level)	Meas #	Measuring Agency	Method	Remark ID	Comments
P	9/23/1983		183.5	1.61	586.5	1	Texas Water Development Board	Steel Tape		
P	9/25/1983		183.52	0.02	586.48	1	Texas Water Development Board	Recorder (Float or Transducer)		
P	9/30/1983		183.54	0.02	586.46	1	Texas Water Development Board	Recorder (Float or Transducer)		
P	10/5/1983		183.7	0.16	586.3	1	Texas Water Development Board	Recorder (Float or Transducer)		
P	10/10/1983		183.97	0.27	586.03	1	Texas Water Development Board	Recorder (Float or Transducer)		
P	10/15/1983		184.07	0.10	585.93	1	Texas Water Development Board	Recorder (Float or Transducer)		
P	10/20/1983		184.03	(0.04)	585.97	1	Texas Water Development Board	Recorder (Float or Transducer)		
P	10/25/1983		183.52	(0.51)	586.48	1	Texas Water Development Board	Recorder (Float or Transducer)		
P	10/30/1983		182.96	(0.56)	587.04	1	Texas Water Development Board	Recorder (Float or Transducer)		
P	11/5/1983		182.58	(0.38)	587.42	1	Texas Water Development Board	Recorder (Float or Transducer)		
P	11/10/1983		182.65	0.07	587.35	1	Texas Water Development Board	Recorder (Float or Transducer)		
P	11/15/1983		182.56	(0.09)	587.44	1	Texas Water Development Board	Recorder (Float or Transducer)		
P	11/20/1983		182.49	(0.07)	587.51	1	Texas Water Development Board	Recorder (Float or Transducer)		
P	11/25/1983		182.37	(0.12)	587.63	1	Texas Water Development Board	Recorder (Float or Transducer)		
P	11/30/1983		182.2	(0.17)	587.8	1	Texas Water Development Board	Recorder (Float or Transducer)		
P	12/5/1983		181.9	(0.30)	588.1	1	Texas Water Development Board	Recorder (Float or Transducer)		
P	12/10/1983		181.72	(0.18)	588.28	1	Texas Water Development Board	Recorder (Float or Transducer)		
P	12/11/1983		181.8	0.08	588.2	1	Texas Water Development Board	Steel Tape		
P	12/15/1983		181.65	(0.15)	588.35	1	Texas Water Development Board	Recorder (Float or Transducer)		
P	12/20/1983		181.62	(0.03)	588.38	1	Texas Water Development Board	Recorder (Float or Transducer)		

Status Code	Date	Time	Water Level (ft. below land surface)	Change value in ( ) indicates rise in level	Water Elevation (ft. above sea level)	Meas #	Measuring Agency	Method	Remark ID	Comments
P	12/25/1983		181.75	0.13	588.25	1	Texas Water Development Board	Recorder (Float or Transducer)		
P	12/30/1983		181.83	0.08	588.17	1	Texas Water Development Board	Recorder (Float or Transducer)		
P	1/5/1984		181.92	0.09	588.08	1	Texas Water Development Board	Recorder (Float or Transducer)		
P	1/10/1984		182.03	0.11	587.97	1	Texas Water Development Board	Recorder (Float or Transducer)		
P	1/15/1984		182.17	0.14	587.83	1	Texas Water Development Board	Recorder (Float or Transducer)		
P	1/20/1984		182.35	0.18	587.65	1	Texas Water Development Board	Recorder (Float or Transducer)		
P	1/25/1984		182.18	(0.17)	587.82	1	Texas Water Development Board	Recorder (Float or Transducer)		
P	1/30/1984		182.26	0.08	587.74	1	Texas Water Development Board	Recorder (Float or Transducer)		
P	2/5/1984		182.36	0.10	587.64	1	Texas Water Development Board	Recorder (Float or Transducer)		
P	2/10/1984		182.12	(0.24)	587.88	1	Texas Water Development Board	Recorder (Float or Transducer)		
P	2/15/1984		181.97	(0.15)	588.03	1	Texas Water Development Board	Recorder (Float or Transducer)		
P	2/20/1984		182.02	0.05	587.98	1	Texas Water Development Board	Recorder (Float or Transducer)		
P	2/25/1984		182	(0.02)	588	1	Texas Water Development Board	Recorder (Float or Transducer)		
P	2/28/1984		187.02	5.02	582.98	1	Texas Water Development Board	Recorder (Float or Transducer)		
P	2/29/1984		182.35	(4.67)	587.65	1	Texas Water Development Board	Recorder (Float or Transducer)		
P	3/5/1984		182.1	(0.25)	587.9	1	Texas Water Development Board	Recorder (Float or Transducer)		
P	3/10/1984		182.55	0.45	587.45	1	Texas Water Development Board	Recorder (Float or Transducer)		
P	3/13/1984		182.6	0.05	587.4	1	Texas Water Development Board	Steel Tape		
P	3/15/1984		182.49	(0.11)	587.51	1	Texas Water Development Board	Recorder (Float or Transducer)		
P	3/20/1984		182.32	(0.17)	587.68	1	Texas Water Development Board	Recorder (Float or Transducer)		

Status Code	Date	Time	Water Level (ft. below land surface)	Change value in ( ) indicates rise in level	Water Elevation (ft. above sea level)	Meas #	Measuring Agency	Method	Remark ID	Comments
P	3/25/1984		182.21	(0.11)	587.79	1	Texas Water Development Board	Recorder (Float or Transducer)		
P	3/30/1984		182.49	0.28	587.51	1	Texas Water Development Board	Recorder (Float or Transducer)		
P	4/5/1984		182.8	0.31	587.2	1	Texas Water Development Board	Recorder (Float or Transducer)		
P	4/10/1984		182.92	0.12	587.08	1	Texas Water Development Board	Recorder (Float or Transducer)		
P	4/15/1984		183.47	0.55	586.53	1	Texas Water Development Board	Recorder (Float or Transducer)		
P	4/20/1984		183.77	0.30	586.23	1	Texas Water Development Board	Recorder (Float or Transducer)		
P	4/25/1984		184.48	0.71	585.52	1	Texas Water Development Board	Recorder (Float or Transducer)		
P	4/29/1984		185	0.52	585	1	Texas Water Development Board	Recorder (Float or Transducer)		
P	6/7/1984		188.87	3.87	581.13	1	Texas Water Development Board	Recorder (Float or Transducer)		
P	6/10/1984		189.12	0.25	580.88	1	Texas Water Development Board	Recorder (Float or Transducer)		
P	6/15/1984		189.55	0.43	580.45	1	Texas Water Development Board	Recorder (Float or Transducer)		
P	6/20/1984		189.95	0.40	580.05	1	Texas Water Development Board	Recorder (Float or Transducer)		
P	6/25/1984		190.37	0.42	579.63	1	Texas Water Development Board	Recorder (Float or Transducer)		
P	6/30/1984		191.11	0.74	578.89	1	Texas Water Development Board	Steel Tape		
P	7/5/1984		191.55	0.44	578.45	1	Texas Water Development Board	Recorder (Float or Transducer)		
P	7/10/1984		192.1	0.55	577.9	1	Texas Water Development Board	Recorder (Float or Transducer)		
P	7/15/1984		192.79	0.69	577.21	1	Texas Water Development Board	Recorder (Float or Transducer)		
P	7/20/1984		193.23	0.44	576.77	1	Texas Water Development Board	Recorder (Float or Transducer)		
P	7/25/1984		193.5	0.27	576.5	1	Texas Water Development Board	Recorder (Float or Transducer)		
P	7/30/1984		193.67	0.17	576.33	1	Texas Water Development Board	Recorder (Float or Transducer)		

Status Code	Date	Time	Water Level (ft. below land surface)	Change value in ( ) indicates rise in level	Water Elevation (ft. above sea level)	Meas #	Measuring Agency	Method	Remark ID	Comments
P	8/5/1984		193.9	0.23	576.1	1	Texas Water Development Board	Recorder (Float or Transducer)		
P	8/10/1984		194.34	0.44	575.66	1	Texas Water Development Board	Recorder (Float or Transducer)		
P	8/15/1984		194.78	0.44	575.22	1	Texas Water Development Board	Recorder (Float or Transducer)		
P	8/16/1984		194.29	(0.49)	575.71	1	Texas Water Development Board	Steel Tape		
P	8/20/1984		194.34	0.05	575.66	1	Texas Water Development Board	Recorder (Float or Transducer)		
P	8/25/1984		194.77	0.43	575.23	1	Texas Water Development Board	Recorder (Float or Transducer)		
P	8/30/1984		195.35	0.58	574.65	1	Texas Water Development Board	Recorder (Float or Transducer)		
P	9/5/1984		195.91	0.56	574.09	1	Texas Water Development Board	Recorder (Float or Transducer)		
P	9/10/1984		195.05	(0.86)	574.95	1	Texas Water Development Board	Recorder (Float or Transducer)		
P	9/13/1984		196.25	1.20	573.75	1	Texas Water Development Board	Recorder (Float or Transducer)		
P	1/4/1985		189.23	(7.02)	580.77	1	Texas Water Development Board	Steel Tape		
P	1/5/1985		189.25	0.02	580.75	1	Texas Water Development Board	Recorder (Float or Transducer)		
P	1/10/1985		189.15	(0.10)	580.85	1	Texas Water Development Board	Recorder (Float or Transducer)		
P	1/15/1985		189.02	(0.13)	580.98	1	Texas Water Development Board	Recorder (Float or Transducer)		
P	1/20/1985		188.84	(0.18)	581.16	1	Texas Water Development Board	Recorder (Float or Transducer)		
P	1/25/1985		188.7	(0.14)	581.3	1	Texas Water Development Board	Recorder (Float or Transducer)		
P	1/30/1985		188.43	(0.27)	581.57	1	Texas Water Development Board	Recorder (Float or Transducer)		
P	2/5/1985		188.45	0.02	581.55	1	Texas Water Development Board	Recorder (Float or Transducer)		
P	2/10/1985		188.5	0.05	581.5	1	Texas Water Development Board	Recorder (Float or Transducer)		
P	2/15/1985		188.48	(0.02)	581.52	1	Texas Water Development Board	Recorder (Float or Transducer)		

Status Code	Date	Time	Water Level (ft. below land surface)	Change value in ( ) indicates rise in level	Water Elevation (ft. above sea level)	Meas #	Measuring Agency	Method	Remark ID	Comments
P	2/20/1985		188.25	(0.23)	581.75	1	Texas Water Development Board	Recorder (Float or Transducer)		
P	2/25/1985		187.33	(0.92)	582.67	1	Texas Water Development Board	Recorder (Float or Transducer)		
P	3/5/1985		186.55	(0.78)	583.45	1	Texas Water Development Board	Recorder (Float or Transducer)		
P	3/10/1985		186.05	(0.50)	583.95	1	Texas Water Development Board	Recorder (Float or Transducer)		
P	3/13/1985		185.96	(0.09)	584.04	1	Texas Water Development Board	Steel Tape		
P	3/15/1985		185.96	0.00	584.04	1	Texas Water Development Board	Recorder (Float or Transducer)		
P	3/20/1985		185.96	0.00	584.04	1	Texas Water Development Board	Recorder (Float or Transducer)		
P	3/25/1985		185.96	0.00	584.04	1	Texas Water Development Board	Recorder (Float or Transducer)		
P	3/30/1985		185.96	0.00	584.04	1	Texas Water Development Board	Recorder (Float or Transducer)		
P	4/5/1985		185.96	0.00	584.04	1	Texas Water Development Board	Recorder (Float or Transducer)		
P	4/10/1985		185.96	0.00	584.04	1	Texas Water Development Board	Recorder (Float or Transducer)		
P	4/15/1985		185.96	0.00	584.04	1	Texas Water Development Board	Recorder (Float or Transducer)		
P	4/20/1985		185.97	0.01	584.03	1	Texas Water Development Board	Recorder (Float or Transducer)		
P	4/25/1985		185.87	(0.10)	584.13	1	Texas Water Development Board	Recorder (Float or Transducer)		
P	4/30/1985		186.05	0.18	583.95	1	Texas Water Development Board	Recorder (Float or Transducer)		
P	5/5/1985		186.18	0.13	583.82	1	Texas Water Development Board	Recorder (Float or Transducer)		
P	5/10/1985		186.47	0.29	583.53	1	Texas Water Development Board	Recorder (Float or Transducer)		
P	5/15/1985		186.9	0.43	583.1	1	Texas Water Development Board	Recorder (Float or Transducer)		
P	5/20/1985		186.97	0.07	583.03	1	Texas Water Development Board	Recorder (Float or Transducer)		
P	5/25/1985		187.13	0.16	582.87	1	Texas Water Development Board	Recorder (Float or Transducer)		

Status Code	Date	Time	Water Level (ft. below land surface)	Change value in ( ) indicates rise in level	Water Elevation (ft. above sea level)	Meas #	Measuring Agency	Method	Remark ID	Comments
P	5/30/1985		187.34	0.21	582.66	1	Texas Water Development Board	Recorder (Float or Transducer)		
P	6/5/1985		188.03	0.69	581.97	1	Texas Water Development Board	Recorder (Float or Transducer)		
P	6/10/1985		187.74	(0.29)	582.26	1	Texas Water Development Board	Recorder (Float or Transducer)		
P	6/15/1985		188.21	0.47	581.79	1	Texas Water Development Board	Recorder (Float or Transducer)		
P	6/19/1985		187.79	(0.42)	582.21	1	Texas Water Development Board	Steel Tape		
P	6/20/1985		188.81	1.02	581.19	1	Texas Water Development Board	Recorder (Float or Transducer)		
P	6/25/1985		188.97	0.16	581.03	1	Texas Water Development Board	Recorder (Float or Transducer)		
P	6/30/1985		189.29	0.32	580.71	1	Texas Water Development Board	Recorder (Float or Transducer)		
P	7/5/1985		189.57	0.28	580.43	1	Texas Water Development Board	Recorder (Float or Transducer)		
P	7/10/1985		189.77	0.20	580.23	1	Texas Water Development Board	Recorder (Float or Transducer)		
P	7/15/1985		190.1	0.33	579.9	1	Texas Water Development Board	Recorder (Float or Transducer)		
P	7/20/1985		190.45	0.35	579.55	1	Texas Water Development Board	Recorder (Float or Transducer)		
P	7/25/1985		190.98	0.53	579.02	1	Texas Water Development Board	Recorder (Float or Transducer)		
P	7/30/1985		191.57	0.59	578.43	1	Texas Water Development Board	Recorder (Float or Transducer)		
P	8/10/1985		193.24	1.67	576.76	1	Texas Water Development Board	Recorder (Float or Transducer)		
P	8/15/1985		193.95	0.71	576.05	1	Texas Water Development Board	Recorder (Float or Transducer)		
P	8/20/1985		194.8	0.85	575.2	1	Texas Water Development Board	Recorder (Float or Transducer)		
P	8/25/1985		195.43	0.63	574.57	1	Texas Water Development Board	Recorder (Float or Transducer)		
P	8/30/1985		195.85	0.42	574.15	1	Texas Water Development Board	Recorder (Float or Transducer)		
P	9/5/1985		196.49	0.64	573.51	1	Texas Water Development Board	Recorder (Float or Transducer)		

Status Code	Date	Time	Water Level (ft. below land surface)	Change value in ( ) indicates rise in level	Water Elevation (ft. above sea level)	Meas #	Measuring Agency	Method	Remark ID	Comments
P	9/10/1985		196.65	0.16	573.35	1	Texas Water Development Board	Recorder (Float or Transducer)		
P	9/15/1985		196.8	0.15	573.2	1	Texas Water Development Board	Recorder (Float or Transducer)		
P	9/20/1985		196.8	0.00	573.2	1	Texas Water Development Board	Recorder (Float or Transducer)		
P	9/25/1985		196.86	0.06	573.14	1	Texas Water Development Board	Recorder (Float or Transducer)		
P	9/30/1985		197.03	0.17	572.97	1	Texas Water Development Board	Recorder (Float or Transducer)		
P	10/5/1985		197.02	(0.01)	572.98	1	Texas Water Development Board	Recorder (Float or Transducer)		
P	10/10/1985		196.76	(0.26)	573.24	1	Texas Water Development Board	Recorder (Float or Transducer)		
P	10/15/1985		196.52	(0.24)	573.48	1	Texas Water Development Board	Recorder (Float or Transducer)		
P	10/20/1985		193.63	(2.89)	576.37	1	Texas Water Development Board	Recorder (Float or Transducer)		
P	10/25/1985		193.19	(0.44)	576.81	1	Texas Water Development Board	Recorder (Float or Transducer)		
P	10/30/1985		193.01	(0.18)	576.99	1	Texas Water Development Board	Recorder (Float or Transducer)		
P	11/5/1985		192.88	(0.13)	577.12	1	Texas Water Development Board	Recorder (Float or Transducer)		
P	11/10/1985		192.73	(0.15)	577.27	1	Texas Water Development Board	Recorder (Float or Transducer)		
P	11/15/1985		192.52	(0.21)	577.48	1	Texas Water Development Board	Recorder (Float or Transducer)		
P	11/20/1985		192.34	(0.18)	577.66	1	Texas Water Development Board	Recorder (Float or Transducer)		
P	11/25/1985		191.95	(0.39)	578.05	1	Texas Water Development Board	Recorder (Float or Transducer)		
P	11/30/1985		191.36	(0.59)	578.64	1	Texas Water Development Board	Recorder (Float or Transducer)		
P	12/5/1985		191.43	0.07	578.57	1	Texas Water Development Board	Recorder (Float or Transducer)		
P	12/9/1985		191.21	(0.22)	578.79	1	Texas Water Development Board	Steel Tape		
P	12/10/1985		191	(0.21)	579	1	Texas Water Development Board	Recorder (Float or Transducer)		

Status Code	Date	Time	Water Level (ft. below land surface)	Change value in ( ) indicates rise in level	Water Elevation (ft. above sea level)	Meas #	Measuring Agency	Method	Remark ID	Comments
P	12/15/1985		190.46	(0.54)	579.54	1	Texas Water Development Board	Recorder (Float or Transducer)		
P	12/20/1985		190.32	(0.14)	579.68	1	Texas Water Development Board	Recorder (Float or Transducer)		
P	12/25/1985		190.14	(0.18)	579.86	1	Texas Water Development Board	Recorder (Float or Transducer)		
P	12/30/1985		189.93	(0.21)	580.07	1	Texas Water Development Board	Recorder (Float or Transducer)		
P	1/5/1986		189.85	(0.08)	580.15	1	Texas Water Development Board	Recorder (Float or Transducer)		
P	1/9/1986		189.72	(0.13)	580.28	1	Texas Water Development Board	Recorder (Float or Transducer)		
P	3/19/1986		187.91	(1.81)	582.09	1	Texas Water Development Board	Steel Tape		
P	3/20/1986		187.99	0.08	582.01	1	Texas Water Development Board	Recorder (Float or Transducer)		
P	3/25/1986		188.13	0.14	581.87	1	Texas Water Development Board	Recorder (Float or Transducer)		
P	3/30/1986		188.33	0.20	581.67	1	Texas Water Development Board	Recorder (Float or Transducer)		
P	4/4/1986		188.49	0.16	581.51	1	Texas Water Development Board	Recorder (Float or Transducer)		
P	6/4/1986		189.73	1.24	580.27	1	Texas Water Development Board	Steel Tape		
P	6/5/1986		189.6	(0.13)	580.4	1	Texas Water Development Board	Recorder (Float or Transducer)		
P	6/10/1986		188.6	(1.00)	581.4	1	Texas Water Development Board	Recorder (Float or Transducer)		
P	6/15/1986		188.11	(0.49)	581.89	1	Texas Water Development Board	Recorder (Float or Transducer)		
P	6/20/1986		188.25	0.14	581.75	1	Texas Water Development Board	Recorder (Float or Transducer)		
P	6/25/1986		188.63	0.38	581.37	1	Texas Water Development Board	Recorder (Float or Transducer)		
P	10/17/1986		191.61	2.98	578.39	1	Texas Water Development Board	Steel Tape		
P	11/3/1986		191.27	(0.34)	578.73	1	Texas Water Development Board	Steel Tape		
P	12/1/1986		190.21	(1.06)	579.79	1	Texas Water Development Board	Recorder (Float or Transducer)		
P	12/5/1986		190.27	0.06	579.73	1	Texas Water Development Board	Recorder (Float or Transducer)		

Status Code	Date	Time	Water Level (ft. below land surface)	Change value in ( ) indicates rise in level	Water Elevation (ft. above sea level)	Meas #	Measuring Agency	Method	Remark ID	Comments
P	12/10/1986		190.1	(0.17)	579.9	1	Texas Water Development Board	Recorder (Float or Transducer)		
P	12/15/1986		189.7	(0.40)	580.3	1	Texas Water Development Board	Recorder (Float or Transducer)		
P	12/20/1986		189	(0.70)	581	1	Texas Water Development Board	Recorder (Float or Transducer)		
P	12/27/1986		186.84	(2.16)	583.16	1	Texas Water Development Board	Recorder (Float or Transducer)		
P	12/30/1986		186.54	(0.30)	583.46	1	Texas Water Development Board	Recorder (Float or Transducer)		
P	1/5/1987		186.63	0.09	583.37	1	Texas Water Development Board	Recorder (Float or Transducer)		
P	1/10/1987		186.71	0.08	583.29	1	Texas Water Development Board	Recorder (Float or Transducer)		
P	1/15/1987		186.94	0.23	583.06	1	Texas Water Development Board	Recorder (Float or Transducer)		
P	1/20/1987		187.23	0.29	582.77	1	Texas Water Development Board	Recorder (Float or Transducer)		
P	1/25/1987		186.94	(0.29)	583.06	1	Texas Water Development Board	Recorder (Float or Transducer)		
P	1/30/1987		186.94	0.00	583.06	1	Texas Water Development Board	Recorder (Float or Transducer)		
P	2/5/1987		187.2	0.26	582.8	1	Texas Water Development Board	Recorder (Float or Transducer)		
P	2/10/1987		187.48	0.28	582.52	1	Texas Water Development Board	Recorder (Float or Transducer)		
P	2/15/1987		187.43	(0.05)	582.57	1	Texas Water Development Board	Recorder (Float or Transducer)		
P	2/20/1987		187.53	0.10	582.47	1	Texas Water Development Board	Recorder (Float or Transducer)		
P	2/25/1987		187.04	(0.49)	582.96	1	Texas Water Development Board	Recorder (Float or Transducer)		
P	2/28/1987		186.4	(0.64)	583.6	1	Texas Water Development Board	Recorder (Float or Transducer)		
P	3/4/1987		186.25	(0.15)	583.75	1	Texas Water Development Board	Recorder (Float or Transducer)		
P	3/5/1987		186.32	0.07	583.68	1	Texas Water Development Board	Recorder (Float or Transducer)		

Status Code	Date	Time	Water Level (ft. below land surface)	Change value in ( ) indicates rise in level	Water Elevation (ft. above sea level)	Meas #	Measuring Agency	Method	Remark ID	Comments
P	3/10/1987		186.44	0.12	583.56	1	Texas Water Development Board	Recorder (Float or Transducer)		
P	3/15/1987		186.3	(0.14)	583.7	1	Texas Water Development Board	Recorder (Float or Transducer)		
P	3/16/1987		186.1	(0.20)	583.9	1	Texas Water Development Board	Recorder (Float or Transducer)		
P	3/20/1987		186.03	(0.07)	583.97	1	Texas Water Development Board	Recorder (Float or Transducer)		
P	3/25/1987		186	(0.03)	584	1	Texas Water Development Board	Recorder (Float or Transducer)		
P	3/30/1987		186.27	0.27	583.73	1	Texas Water Development Board	Recorder (Float or Transducer)		
P	4/5/1987		186.38	0.11	583.62	1	Texas Water Development Board	Recorder (Float or Transducer)		
P	4/10/1987		186.7	0.32	583.3	1	Texas Water Development Board	Recorder (Float or Transducer)		
P	4/14/1987		186.84	0.14	583.16	1	Texas Water Development Board	Recorder (Float or Transducer)		
P	4/15/1987		186.76	(0.08)	583.24	1	Texas Water Development Board	Recorder (Float or Transducer)		
P	4/20/1987		186.95	0.19	583.05	1	Texas Water Development Board	Recorder (Float or Transducer)		
P	4/25/1987		187.31	0.36	582.69	1	Texas Water Development Board	Recorder (Float or Transducer)		
P	4/30/1987		187.51	0.20	582.49	1	Texas Water Development Board	Recorder (Float or Transducer)		
P	5/5/1987		187.89	0.38	582.11	1	Texas Water Development Board	Recorder (Float or Transducer)		
P	5/10/1987		188.01	0.12	581.99	1	Texas Water Development Board	Recorder (Float or Transducer)		
P	5/15/1987		188.13	0.12	581.87	1	Texas Water Development Board	Recorder (Float or Transducer)		
P	5/20/1987		187.75	(0.38)	582.25	1	Texas Water Development Board	Recorder (Float or Transducer)		
P	5/25/1987		187.7	(0.05)	582.3	1	Texas Water Development Board	Recorder (Float or Transducer)		
P	6/5/1987		184.63	(3.07)	585.37	1	Texas Water Development Board	Recorder (Float or Transducer)		

Status Code	Date	Time	Water Level (ft. below land surface)	Change value in ( ) indicates rise in level	Water Elevation (ft. above sea level)	Meas #	Measuring Agency	Method	Remark ID	Comments
P	6/10/1987		185.62	0.99	584.38	1	Texas Water Development Board	Recorder (Float or Transducer)		
P	6/15/1987		183.11	(2.51)	586.89	1	Texas Water Development Board	Recorder (Float or Transducer)		
P	6/20/1987		184.4	1.29	585.6	1	Texas Water Development Board	Recorder (Float or Transducer)		
P	6/25/1987		185.22	0.82	584.78	1	Texas Water Development Board	Recorder (Float or Transducer)		
P	6/30/1987		185.15	(0.07)	584.85	1	Texas Water Development Board	Recorder (Float or Transducer)		
P	7/5/1987		185.3	0.15	584.7	1	Texas Water Development Board	Recorder (Float or Transducer)		
P	7/10/1987		185.82	0.52	584.18	1	Texas Water Development Board	Recorder (Float or Transducer)		
P	7/15/1987		186.27	0.45	583.73	1	Texas Water Development Board	Recorder (Float or Transducer)		
P	7/20/1987		185.61	(0.66)	584.39	1	Texas Water Development Board	Recorder (Float or Transducer)		
P	7/25/1987		186.31	0.70	583.69	1	Texas Water Development Board	Recorder (Float or Transducer)		
P	7/30/1987		186.76	0.45	583.24	1	Texas Water Development Board	Recorder (Float or Transducer)		
P	8/5/1987		187.3	0.54	582.7	1	Texas Water Development Board	Recorder (Float or Transducer)		
P	8/10/1987		188.22	0.92	581.78	1	Texas Water Development Board	Recorder (Float or Transducer)		
P	8/15/1987		188.7	0.48	581.3	1	Texas Water Development Board	Recorder (Float or Transducer)		
P	8/20/1987		189.57	0.87	580.43	1	Texas Water Development Board	Recorder (Float or Transducer)		
P	8/25/1987		190.27	0.70	579.73	1	Texas Water Development Board	Recorder (Float or Transducer)		
P	8/30/1987		190.78	0.51	579.22	1	Texas Water Development Board	Recorder (Float or Transducer)		
P	9/5/1987		191.25	0.47	578.75	1	Texas Water Development Board	Recorder (Float or Transducer)		
P	9/10/1987		191.73	0.48	578.27	1	Texas Water Development Board	Recorder (Float or Transducer)		

Texas Water Development Board

Texas Water Development Board (TWDB)
Groundwater Database (GWDB)
Well Information Report for State Well Number 58-33-403

groundwater division

Status Code	Date	Time	Water Level (ft. below land surface)	Change value in ( ) indicates rise in level	Water Elevation (ft. above sea level)	Meas #	Measuring Agency	Method	Remark ID	Comments
P	9/15/1987		191.76	0.03	578.24	1	Texas Water Development Board	Recorder (Float or Transducer)		
P	9/20/1987		191.69	(0.07)	578.31	1	Texas Water Development Board	Recorder (Float or Transducer)		
P	9/23/1987		181.94	(9.75)	588.06	1	Texas Water Development Board	Steel Tape		
P	9/25/1987		191.93	9.99	578.07	1	Texas Water Development Board	Recorder (Float or Transducer)		
P	9/30/1987		192.07	0.14	577.93	1	Texas Water Development Board	Recorder (Float or Transducer)		
P	10/5/1987		192.5	0.43	577.5	1	Texas Water Development Board	Recorder (Float or Transducer)		
P	10/10/1987		192.63	0.13	577.37	1	Texas Water Development Board	Recorder (Float or Transducer)		
P	10/15/1987		193.1	0.47	576.9	1	Texas Water Development Board	Recorder (Float or Transducer)		
P	10/20/1987		193.34	0.24	576.66	1	Texas Water Development Board	Recorder (Float or Transducer)		
P	10/25/1987		193.42	0.08	576.58	1	Texas Water Development Board	Recorder (Float or Transducer)		
P	10/30/1987		193.43	0.01	576.57	1	Texas Water Development Board	Recorder (Float or Transducer)		
P	11/5/1987		193.4	(0.03)	576.6	1	Texas Water Development Board	Recorder (Float or Transducer)		
P	12/16/1987		191.39	(2.01)	578.61	1	Texas Water Development Board	Recorder (Float or Transducer)		
P	3/30/1988		190.74	(0.65)	579.26	1	Texas Water Development Board	Recorder (Float or Transducer)		
P	4/1/1988		190.5	(0.24)	579.5	1	Texas Water Development Board	Recorder (Float or Transducer)		
P	6/17/1988		192.37	1.87	577.63	1	Texas Water Development Board	Recorder (Float or Transducer)		
P	9/28/1988		196.89	4.52	573.11	1	Texas Water Development Board	Steel Tape		
X	1/18/1989					1	Texas Water Development Board		30	
X	3/5/1990					1	Texas Water Development Board		30	
X	2/12/1991					1	Texas Water Development Board		30	
X	2/27/1992					1	Texas Water Development Board		30	

Code Descriptions

Status Code	Status Description
P	Publishable
X	No Measurement

Remark ID	Remark Description
30	Well temporarily inaccessible due to impassable roads, locked gate, etc.

Water Quality Analysis

Sample Date: 2/10/1966 **Sample Time:** 0000 **Sample Number:** 1 **Collection Entity:** Registered Water Well Driller

Sampled Aquifer: Hosston Formation

Analyzed Lab: Pope Testing Lab **Reliability:** Reliability unknown or not available

Collection Remarks: No Data

Parameter Code	Parameter Description	Flag	Value*	Units	Plus/Minus
00415	ALKALINITY, PHENOLPHTHALEIN (MG/L)		10	mg/L	
00410	ALKALINITY, TOTAL (MG/L AS CACO3)		259	mg/L as CACO3	
00440	BICARBONATE ION, CALCULATED (MG/L AS HCO3)		291.66	mg/L	
00910	CALCIUM (MG/L)		27	mg/L	
00445	CARBONATE ION, CALCULATED (MG/L AS CO3)		12	mg/L	
00940	CHLORIDE, TOTAL (MG/L AS CL)		630	mg/L	
00900	HARDNESS, TOTAL, CALCULATED (MG/L AS CACO3)		125	mg/L as CACO3	
01045	IRON, TOTAL (UG/L AS FE)		650	ug/L	
00920	MAGNESIUM (MG/L)		14	mg/L	
71851	NITRATE NITROGEN, DISSOLVED, CALCULATED (MG/L AS NO3)	<	0.4	mg/L as NO3	
00400	PH (STANDARD UNITS), FIELD		8.3	SU	
71860	RESIDUAL SODIUM CARBONATE, CALCULATED		2.68		
00955	SILICA, DISSOLVED (MG/L AS SI02)		8	mg/L as SIO2	
00931	SODIUM ADSORPTION RATIO, CALCULATED (SAR)		22.53		
00932	SODIUM, CALCULATED, PERCENT		90	PCT	
00929	SODIUM, TOTAL (MG/L AS NA)		579	mg/L	
00094	SPECIFIC CONDUCTANCE, FIELD (UMHOS/CM AT 25C)		3010	MICR	
00945	SULFATE, TOTAL (MG/L AS SO4)		228	mg/L as SO4	
70301	TOTAL DISSOLVED SOLIDS , SUM OF CONSTITUENTS (MG/L)		1641	mg/L	

Water Quality Analysis

Sample Date: 4/11/1967 **Sample Time:** 0000 **Sample Number:** 1 **Collection Entity:** Texas Water Development Board

Sampled Aquifer: Hosston Formation

Analyzed Lab: Texas Department of Health **Reliability:** Collected from pumped well, but not filtered or preserved

Collection Remarks: pumping 40 min.

Parameter Code	Parameter Description	Flag	Value*	Units	Plus/Minus
00415	ALKALINITY, PHENOLPHTHALEIN (MG/L)		0	mg/L	
00410	ALKALINITY, TOTAL (MG/L AS CACO3)		243	mg/L as CACO3	
00440	BICARBONATE ION, CALCULATED (MG/L AS HCO3)		296.54	mg/L	
01020	BORON, DISSOLVED (UG/L AS B)		4500	ug/L	
00910	CALCIUM (MG/L)		22	mg/L	
00445	CARBONATE ION, CALCULATED (MG/L AS CO3)		0	mg/L	
00940	CHLORIDE, TOTAL (MG/L AS CL)		660	mg/L	
00950	FLUORIDE, DISSOLVED (MG/L AS F)		3.2	mg/L	
00900	HARDNESS, TOTAL, CALCULATED (MG/L AS CACO3)		124	mg/L as CACO3	
01045	IRON, TOTAL (UG/L AS FE)		1300	ug/L	
00920	MAGNESIUM (MG/L)		17	mg/L	
71851	NITRATE NITROGEN, DISSOLVED, CALCULATED (MG/L AS NO3)	<	0.4	mg/L as NO3	
00400	PH (STANDARD UNITS), FIELD		8.1	SU	
00937	POTASSIUM, TOTAL (MG/L AS K)		26	mg/L	
71860	RESIDUAL SODIUM CARBONATE, CALCULATED		2.36		
00955	SILICA, DISSOLVED (MG/L AS SI02)		9	mg/L as SIO2	
00931	SODIUM ADSORPTION RATIO, CALCULATED (SAR)		22.58		
00932	SODIUM, CALCULATED, PERCENT		90	PCT	
00929	SODIUM, TOTAL (MG/L AS NA)		580	mg/L	
00094	SPECIFIC CONDUCTANCE, FIELD (UMHOS/CM AT 25C)		3402	MICR	
00945	SULFATE, TOTAL (MG/L AS SO4)		214	mg/L as SO4	
70301	TOTAL DISSOLVED SOLIDS , SUM OF CONSTITUENTS (MG/L)		1677	mg/L	

Water Quality Analysis

Sample Date: 4/13/1967 **Sample Time:** 0000 **Sample Number:** 1 **Collection Entity:** Texas Water Development Board

Sampled Aquifer: Hosston Formation

Analyzed Lab: Texas Department of Health **Reliability:** Collected from pumped well, but not filtered or preserved

Collection Remarks: pumping 4 hours

Parameter Code	Parameter Description	Flag	Value*	Units	Plus/Minus
00415	ALKALINITY, PHENOLPHTHALEIN (MG/L)		0	mg/L	
00410	ALKALINITY, TOTAL (MG/L AS CACO3)		255	mg/L as CACO3	
00440	BICARBONATE ION, CALCULATED (MG/L AS HCO3)		311.19	mg/L	
01020	BORON, DISSOLVED (UG/L AS B)		4700	ug/L	
00910	CALCIUM (MG/L)		34	mg/L	
00445	CARBONATE ION, CALCULATED (MG/L AS CO3)		0	mg/L	
00940	CHLORIDE, TOTAL (MG/L AS CL)		680	mg/L	
00950	FLUORIDE, DISSOLVED (MG/L AS F)		3.4	mg/L	
00900	HARDNESS, TOTAL, CALCULATED (MG/L AS CACO3)		146	mg/L as CACO3	
01045	IRON, TOTAL (UG/L AS FE)		100	ug/L	
00920	MAGNESIUM (MG/L)		15	mg/L	
71851	NITRATE NITROGEN, DISSOLVED, CALCULATED (MG/L AS NO3)	<	0.4	mg/L as NO3	
00400	PH (STANDARD UNITS), FIELD		7.9	SU	
00937	POTASSIUM, TOTAL (MG/L AS K)		26	mg/L	
71860	RESIDUAL SODIUM CARBONATE, CALCULATED		2.17		
00955	SILICA, DISSOLVED (MG/L AS SI02)		10	mg/L as SIO2	
00931	SODIUM ADSORPTION RATIO, CALCULATED (SAR)		21.2		
00932	SODIUM, CALCULATED, PERCENT		89	PCT	
00929	SODIUM, TOTAL (MG/L AS NA)		590	mg/L	
00094	SPECIFIC CONDUCTANCE, FIELD (UMHOS/CM AT 25C)		3486	MICR	
00945	SULFATE, TOTAL (MG/L AS SO4)		217	mg/L as SO4	
70301	TOTAL DISSOLVED SOLIDS , SUM OF CONSTITUENTS (MG/L)		1728	mg/L	

** Value may not display all significant digits for parameter in results, check Scanned Documents for laboratory paperwork..*

GWDB DISCLAIMER: Except where noted, all of the information provided in the Texas Water Development Board (TWDB) Groundwater Database (https://www.twdb.texas.gov/groundwater/data/gwdbrpt.asp) is believed to be accurate and reliable; however, the TWDB assumes no responsibility for any errors appearing in rules or otherwise. Further, TWDB assumes no responsibility for the use of the information provided. PLEASE NOTE that users of these data are responsible for checking the accuracy, completeness, currency and/or suitability of all information themselves. TWDB makes no guarantees or warranties as to the accuracy, completeness, currency, or suitability of the information provided via the Groundwater Database (GWDB). TWDB specifically disclaims any and all liability for any claims or damages that may result from providing GWDB data or the information it contains. For additional information or answers to questions concerning the TWDB GWDB, contact the Groundwater Data Team at GroundwaterData@twdb.texas.gov.

Texas Water Development Board (TWDB)
Groundwater Database (GWDB)
Well Information Report for State Well Number 58-33-404

GWDB Reports and Downloads

Well Basic Details

Scanned Documents

State Well Number	5833404
County	Travis
River Basin	Colorado
Groundwater Management Area	8
Regional Water Planning Area	K - Lower Colorado
Groundwater Conservation District	GCD Does Not Exist
Latitude (decimal degrees)	30.448889
Latitude (degrees minutes seconds)	30° 26' 56" N
Longitude (decimal degrees)	-97.975
Longitude (degrees minutes seconds)	097° 58' 30" W
Coordinate Source	+/- 1 Second
Aquifer Code	218GLRS - Glen Rose Limestone
Aquifer	Trinity
Aquifer Pick Method	
Land Surface Elevation (feet above sea level)	906
Land Surface Elevation Method	Digital Elevation Model -DEM
Well Depth (feet below land surface)	305
Well Depth Source	Unknown
Drilling Start Date	
Drilling End Date	0/0/1943
Drilling Method	
Borehole Completion	

Well Type	Withdrawal of Water
Well Use	Domestic
Water Level Observation	None
Water Quality Available	Yes
Pump	Submersible
Pump Depth (feet below land surface)	
Power Type	Electric Motor
Annular Seal Method	
Surface Completion	
Owner	Harris
Driller	
Other Data Available	
Well Report Tracking Number	
Plugging Report Tracking Number	
U.S. Geological Survey Site Number	
Texas Commission on Environmental Quality Source Id	
Groundwater Conservation District Well Number	
Owner Well Number	
Other Well Number	
Previous State Well Number	
Reporting Agency	
Created Date	
Last Update Date	3/4/2020

Remarks	Well C-4 in 1957 Travis County report.

Casing - No Data

Well Tests - No Data

Lithology - No Data

Annular Seal Range - No Data

Borehole - No Data

Plugged Back - No Data

Filter Pack - No Data

Packers - No Data

Water Level Measurements

No Data Available

Water Quality Analysis

Sample Date: 10/15/1949 **Sample Time:** 0000 **Sample Number:** 1 **Collection Entity:** U.S. Geological Survey

Sampled Aquifer: Glen Rose Limestone

Analyzed Lab: U.S. Geological Survey Lab **Reliability:** Collected from pumped well, but not filtered or preserved

Collection Remarks: No Data

Parameter Code	Parameter Description	Flag	Value*	Units	Plus/Minus
00415	ALKALINITY, PHENOLPHTHALEIN (MG/L)		0	mg/L	
00410	ALKALINITY, TOTAL (MG/L AS CACO3)		290.16	mg/L as CACO3	
00440	BICARBONATE ION, CALCULATED (MG/L AS HCO3)		354.1	mg/L	
00910	CALCIUM (MG/L)		94	mg/L	
00445	CARBONATE ION, CALCULATED (MG/L AS CO3)		0	mg/L	
00940	CHLORIDE, TOTAL (MG/L AS CL)		38	mg/L	
00900	HARDNESS, TOTAL, CALCULATED (MG/L AS CACO3)		485	mg/L as CACO3	
00920	MAGNESIUM (MG/L)		61	mg/L	
71851	NITRATE NITROGEN, DISSOLVED, CALCULATED (MG/L AS NO3)		1	mg/L as NO3	
00400	PH (STANDARD UNITS), FIELD		7.8	SU	
71860	RESIDUAL SODIUM CARBONATE, CALCULATED		0		
00955	SILICA, DISSOLVED (MG/L AS SI02)		18	mg/L as SIO2	
00931	SODIUM ADSORPTION RATIO, CALCULATED (SAR)		1.74		
00932	SODIUM, CALCULATED, PERCENT		28	PCT	
00929	SODIUM, TOTAL (MG/L AS NA)	calculated	88	mg/L	
00094	SPECIFIC CONDUCTANCE, FIELD (UMHOS/CM AT 25C)		1200	MICR	
00945	SULFATE, TOTAL (MG/L AS SO4)		319	mg/L as SO4	
70301	TOTAL DISSOLVED SOLIDS , SUM OF CONSTITUENTS (MG/L)		793	mg/L	

Water Quality Analysis

Sample Date: 8/27/1970 **Sample Time:** 0000 **Sample Number:** 1 **Collection Entity:** Texas Water Development Board

Sampled Aquifer: Glen Rose Limestone

Analyzed Lab: Texas Department of Health **Reliability:** Collected from pumped well, but not filtered or preserved

Collection Remarks: No Data

Parameter Code	Parameter Description	Flag	Value*	Units	Plus/Minus
00415	ALKALINITY, PHENOLPHTHALEIN (MG/L)		0	mg/L	
00410	ALKALINITY, TOTAL (MG/L AS CACO3)		271	mg/L as CACO3	
00440	BICARBONATE ION, CALCULATED (MG/L AS HCO3)		330.71	mg/L	
00910	CALCIUM (MG/L)		75	mg/L	
00445	CARBONATE ION, CALCULATED (MG/L AS CO3)		0	mg/L	
00940	CHLORIDE, TOTAL (MG/L AS CL)		20	mg/L	
00950	FLUORIDE, DISSOLVED (MG/L AS F)		0.9	mg/L	
00900	HARDNESS, TOTAL, CALCULATED (MG/L AS CACO3)		368	mg/L as CACO3	
00920	MAGNESIUM (MG/L)		44	mg/L	
71851	NITRATE NITROGEN, DISSOLVED, CALCULATED (MG/L AS NO3)	<	0.4	mg/L as NO3	
00400	PH (STANDARD UNITS), FIELD		7.6	SU	
71860	RESIDUAL SODIUM CARBONATE, CALCULATED		0		
00955	SILICA, DISSOLVED (MG/L AS SI02)		17	mg/L as SIO2	
00931	SODIUM ADSORPTION RATIO, CALCULATED (SAR)		0.91		
00932	SODIUM, CALCULATED, PERCENT		19	PCT	
00929	SODIUM, TOTAL (MG/L AS NA)		40	mg/L	
00094	SPECIFIC CONDUCTANCE, FIELD (UMHOS/CM AT 25C)		966	MICR	
00945	SULFATE, TOTAL (MG/L AS SO4)		158	mg/L as SO4	
00010	TEMPERATURE, WATER (CELSIUS)		27	C	
70301	TOTAL DISSOLVED SOLIDS , SUM OF CONSTITUENTS (MG/L)		517	mg/L	

** Value may not display all significant digits for parameter in results, check Scanned Documents for laboratory paperwork..*

GWDB DISCLAIMER: Except where noted, all of the information provided in the Texas Water Development Board (TWDB) Groundwater Database (https://www.twdb.texas.gov/groundwater/data/gwdbrpt.asp) is believed to be accurate and reliable; however, the TWDB assumes no responsibility for any errors appearing in rules or otherwise. Further, TWDB assumes no responsibility for the use of the information provided. PLEASE NOTE that users of these data are responsible for checking the accuracy, completeness, currency and/or suitability of all information themselves. TWDB makes no guarantees or warranties as to the accuracy, completeness, currency, or suitability of the information provided via the Groundwater Database (GWDB). TWDB specifically disclaims any and all liability for any claims or damages that may result from providing GWDB data or the information it contains. For additional information or answers to questions concerning the TWDB GWDB, contact the Groundwater Data Team at GroundwaterData@twdb.texas.gov.

Texas Water Development Board (TWDB)
Groundwater Database (GWDB)
Well Information Report for State Well Number 58-33-405

GWDB Reports and Downloads

Well Basic Details

Scanned Documents

State Well Number	5833405
County	Travis
River Basin	Colorado
Groundwater Management Area	8
Regional Water Planning Area	K - Lower Colorado
Groundwater Conservation District	GCD Does Not Exist
Latitude (decimal degrees)	30.429722
Latitude (degrees minutes seconds)	30° 25' 47" N
Longitude (decimal degrees)	-97.991667
Longitude (degrees minutes seconds)	097° 59' 30" W
Coordinate Source	+/- 10 Seconds
Aquifer Code	218GLRSL - Glen Rose Limestone, Lower Member
Aquifer	Trinity
Aquifer Pick Method	
Land Surface Elevation (feet above sea level)	910
Land Surface Elevation Method	Interpolated From Topo Map
Well Depth (feet below land surface)	388
Well Depth Source	Measured
Drilling Start Date	
Drilling End Date	1/0/1972
Drilling Method	Cable Tool
Borehole Completion	Perforated or Slotted

Well Type	Withdrawal of Water
Well Use	Unused
Water Level Observation	Miscellaneous Measurements
Water Quality Available	No
Pump	None
Pump Depth (feet below land surface)	
Power Type	
Annular Seal Method	
Surface Completion	
Owner	Chuck Van Cleave
Driller	Powell Drilling
Other Data Available	Electric Log
Well Report Tracking Number	
Plugging Report Tracking Number	
U.S. Geological Survey Site Number	
Texas Commission on Environmental Quality Source Id	
Groundwater Conservation District Well Number	
Owner Well Number	
Other Well Number	
Previous State Well Number	
Reporting Agency	Texas Water Development Board
Created Date	1/27/1972
Last Update Date	3/4/2020

Remarks	Measured yield 20 GPM wth 74 feet drawdown after pumping 1 hour in 1972. Cemented from 0 to 30 feet. Pump set at 336 feet.

Casing

Diameter (in.)	Casing Type	Casing Material	Schedule	Gauge	Top Depth (ft.)	Bottom Depth (ft.)
5	Blank	Steel			0	388

Well Tests - No Data

Lithology - No Data

Annular Seal Range - No Data

Borehole - No Data

Plugged Back - No Data

Filter Pack - No Data

Packers - No Data

Water Level Measurements

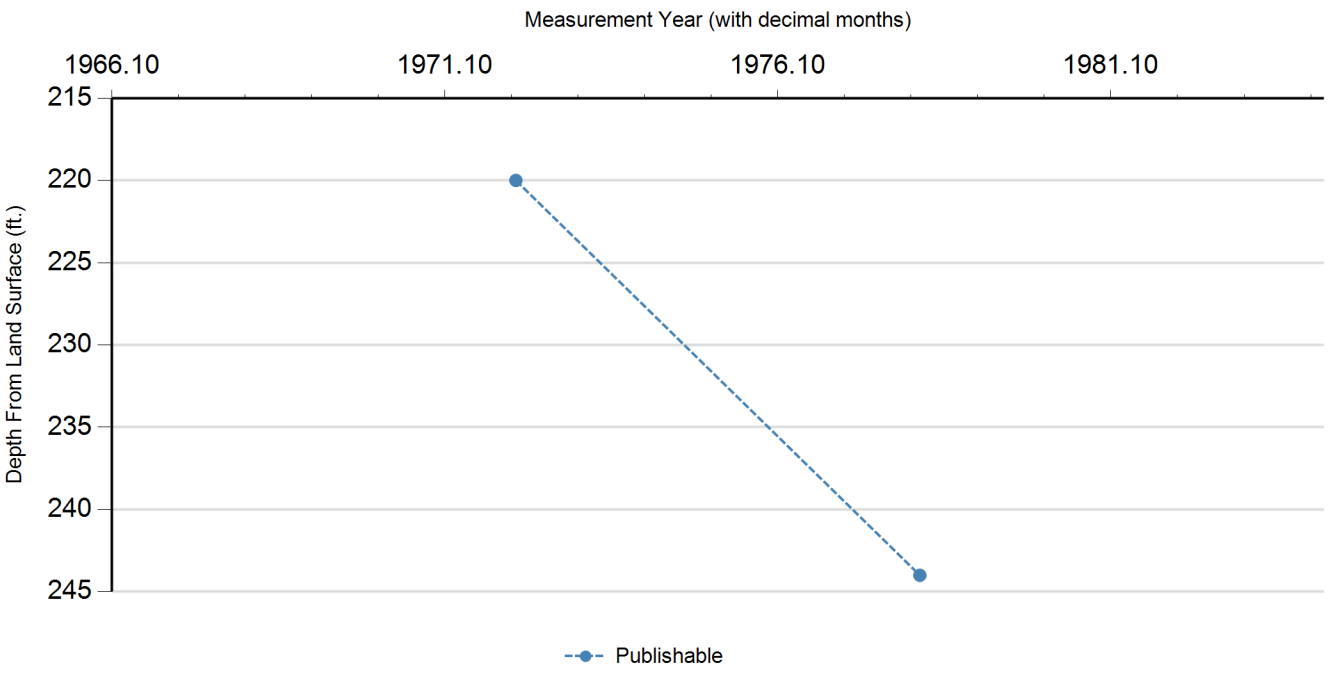

Status Code	Date	Time	Water Level (ft. below land surface)	Change value in ( ) indicates rise in level	Water Elevation (ft. above sea level)	Meas #	Measuring Agency	Method	Remark ID	Comments
P	1/0/1972		220		690	1	Other or Source of Measurement Unknown	Unknown		
P	3/23/1978		244	24.00	666	1	Other or Source of Measurement Unknown	Unknown		

Code Descriptions

Status Code	Status Description
P	Publishable

Water Quality Analysis - No Data Available

GWDB DISCLAIMER: Except where noted, all of the information provided in the Texas Water Development Board (TWDB) Groundwater Database (https://www.twdb.texas.gov/groundwater/data/gwdbrpt.asp) is believed to be accurate and reliable; however, the TWDB assumes no responsibility for any errors appearing in rules or otherwise. Further, TWDB assumes no responsibility for the use of the information provided. PLEASE NOTE that users of these data are responsible for checking the accuracy, completeness, currency and/or suitability of all information themselves. TWDB makes no guarantees or warranties as to the accuracy, completeness, currency, or suitability of the information provided via the Groundwater Database (GWDB). TWDB specifically disclaims any and all liability for any claims or damages that may result from providing GWDB data or the information it contains. For additional information or answers to questions concerning the TWDB GWDB, contact the Groundwater Data Team at GroundwaterData@twdb.texas.gov.

Texas Water Development Board (TWDB)
Groundwater Database (GWDB)
Well Information Report for State Well Number 58-33-406

GWDB Reports and Downloads

Well Basic Details

Scanned Documents

State Well Number	5833406
County	Travis
River Basin	Colorado
Groundwater Management Area	8
Regional Water Planning Area	K - Lower Colorado
Groundwater Conservation District	GCD Does Not Exist
Latitude (decimal degrees)	30.433889
Latitude (degrees minutes seconds)	30° 26' 02" N
Longitude (decimal degrees)	-97.9825
Longitude (degrees minutes seconds)	097° 58' 57" W
Coordinate Source	+/- 1 Second
Aquifer Code	217HSTN - Hosston Formation
Aquifer	Trinity
Aquifer Pick Method	
Land Surface Elevation (feet above sea level)	976
Land Surface Elevation Method	Digital Elevation Model -DEM
Well Depth (feet below land surface)	550
Well Depth Source	Owner
Drilling Start Date	
Drilling End Date	0/0/1993
Drilling Method	
Borehole Completion	

Well Type	Withdrawal of Water
Well Use	Domestic
Water Level Observation	None
Water Quality Available	Yes
Pump	Submersible
Pump Depth (feet below land surface)	
Power Type	Electric Motor
Annular Seal Method	
Surface Completion	
Owner	Travis Oaks Baptist Church
Driller	Tom Arnold
Other Data Available	
Well Report Tracking Number	
Plugging Report Tracking Number	
U.S. Geological Survey Site Number	
Texas Commission on Environmental Quality Source Id	
Groundwater Conservation District Well Number	
Owner Well Number	
Other Well Number	
Previous State Well Number	
Reporting Agency	Texas Water Development Board
Created Date	9/13/1994
Last Update Date	3/4/2020

Remarks	

Casing - No Data

Well Tests - No Data

Lithology - No Data

Annular Seal Range - No Data

Borehole - No Data

Plugged Back - No Data

Filter Pack - No Data

Packers - No Data

Water Level Measurements

No Data Available

Water Quality Analysis

Sample Date: 9/13/1994 **Sample Time:** 1055 **Sample Number:** 1 **Collection Entity:** Texas Water Development Board

Sampled Aquifer: Hosston Formation

Analyzed Lab: Texas Department of Health **Reliability:** Sampled using TWDB protocols

Collection Remarks: No Data

Parameter Code	Parameter Description	Flag	Value*	Units	Plus/Minus
39086	ALKALINITY FIELD DISSOLVED AS CACO3		320	mg/L as CACO3	
00415	ALKALINITY, PHENOLPHTHALEIN (MG/L)		0	mg/L	
00410	ALKALINITY, TOTAL (MG/L AS CACO3)		250	mg/L as CACO3	
01503	ALPHA, DISSOLVED (PC/L)	<	2	PC/L	
01106	ALUMINUM, DISSOLVED (UG/L AS AL)		23	ug/L	
01095	ANTIMONY, DISSOLVED (UG/L AS SB)	<	2	ug/L	
01000	ARSENIC, DISSOLVED (UG/L AS AS)		1	ug/L	
01005	BARIUM, DISSOLVED (UG/L AS BA)		25.9	ug/L	
01010	BERYLLIUM, DISSOLVED (UG/L AS BE)	<	2	ug/L	
03503	BETA, DISSOLVED (PC/L)		19	PC/L	5
00440	BICARBONATE ION, CALCULATED (MG/L AS HCO3)		305.09	mg/L	
71870	BROMIDE, DISSOLVED, (MG/L AS BR)		2.62	mg/L	
01025	CADMIUM, DISSOLVED (UG/L AS CD)	<	0.5	ug/L	
00915	CALCIUM, DISSOLVED (MG/L AS CA)		70	mg/L	
00445	CARBONATE ION, CALCULATED (MG/L AS CO3)		0	mg/L	
00941	CHLORIDE, DISSOLVED (MG/L AS CL)		569	mg/L	
01030	CHROMIUM, DISSOLVED (UG/L AS CR)	<	10	ug/L	
01035	COBALT, DISSOLVED (UG/L AS CO)	<	10	ug/L	
01040	COPPER, DISSOLVED (UG/L AS CU)		6.4	ug/L	
00950	FLUORIDE, DISSOLVED (MG/L AS F)		3.36	mg/L	
00900	HARDNESS, TOTAL, CALCULATED (MG/L AS CACO3)		397	mg/L as CACO3	
01046	IRON, DISSOLVED (UG/L AS FE)		55.2	ug/L	
01049	LEAD, DISSOLVED (UG/L AS PB)	<	5	ug/L	
01130	LITHIUM, DISSOLVED (UG/L AS LI)		203	ug/L	
00925	MAGNESIUM, DISSOLVED (MG/L AS MG)		49	mg/L	
01056	MANGANESE, DISSOLVED (UG/L AS MN)		5.9	ug/L	
71890	MERCURY, DISSOLVED (UG/L AS HG)	<	0.13	ug/L	
01060	MOLYBDENUM, DISSOLVED (UG/L AS MO)	<	50	ug/L	
01065	NICKEL, DISSOLVED (UG/L AS NI)	<	10	ug/L	

Texas Water Development Board

Texas Water Development Board (TWDB) Groundwater Database (GWDB) Well Information Report for State Well Number 58-33-406

groundwater division

Parameter Code	Parameter Description	Flag	Value*	Units	Plus/Minus
00618	NITRATE NITROGEN, DISSOLVED (MG/L AS N)		0.05	mg/L as N	
71851	NITRATE NITROGEN, DISSOLVED, CALCULATED (MG/L AS NO3)		0.22	mg/L as NO3	
00613	NITRITE NITROGEN, DISSOLVED (MG/L AS N)	<	0.01	mg/L as N	
00608	NITROGEN, AMMONIA, DISSOLVED (MG/L AS N)		1.11	mg/L as N	
00623	NITROGEN, KJELDAHL, DISSOLVED (MG/L AS N)		1.9	mg/L as N	
00090	OXIDATION REDUCTION POTENTIAL (ORP), MILLIVOLTS		-16.1	MV	
00400	PH (STANDARD UNITS), FIELD		7.59	SU	
00935	POTASSIUM, DISSOLVED (MG/L AS K)		30	mg/L	
71860	RESIDUAL SODIUM CARBONATE, CALCULATED		0		
01145	SELENIUM, DISSOLVED (UG/L AS SE)	<	4	ug/L	
00955	SILICA, DISSOLVED (MG/L AS SI02)		13	mg/L as SIO2	
01075	SILVER, DISSOLVED (UG/L AS AG)	<	10	ug/L	
00931	SODIUM ADSORPTION RATIO, CALCULATED (SAR)		5.9		
00932	SODIUM, CALCULATED, PERCENT		60	PCT	
00930	SODIUM, DISSOLVED (MG/L AS NA)		263	mg/L	
00094	SPECIFIC CONDUCTANCE, FIELD (UMHOS/CM AT 25C)		1654	MICR	
01080	STRONTIUM, DISSOLVED (UG/L AS SR)		18700	ug/L	
00946	SULFATE, DISSOLVED (MG/L AS SO4)		269	mg/L as SO4	
00010	TEMPERATURE, WATER (CELSIUS)		24.5	C	
01057	THALLIUM, DISSOLVED (UG/L AS TL)	<	2	ug/L	
70301	TOTAL DISSOLVED SOLIDS , SUM OF CONSTITUENTS (MG/L)		1435	mg/L	
01085	VANADIUM, DISSOLVED (UG/L AS V)	<	10	ug/L	
01090	ZINC, DISSOLVED (UG/L AS ZN)		38.6	ug/L	

** Value may not display all significant digits for parameter in results, check Scanned Documents for laboratory paperwork..*

GWDB DISCLAIMER: Except where noted, all of the information provided in the Texas Water Development Board (TWDB) Groundwater Database (https://www.twdb.texas.gov/groundwater/data/gwdbrpt.asp) is believed to be accurate and reliable; however, the TWDB assumes no responsibility for any errors appearing in rules or otherwise. Further, TWDB assumes no responsibility for the use of the information provided. PLEASE NOTE that users of these data are responsible for checking the accuracy, completeness, currency and/or suitability of all information themselves. TWDB makes no guarantees or warranties as to the accuracy, completeness, currency, or suitability of the information provided via the Groundwater Database (GWDB). TWDB specifically disclaims any and all liability for any claims or damages that may result from providing GWDB data or the information it contains. For additional information or answers to questions concerning the TWDB GWDB, contact the Groundwater Data Team at GroundwaterData@twdb.texas.gov.

Texas Water Development Board (TWDB)
Groundwater Database (GWDB)
Well Information Report for State Well Number 58-33-407

GWDB Reports and Downloads

Well Basic Details

Scanned Documents

State Well Number	5833407
County	Travis
River Basin	Colorado
Groundwater Management Area	8
Regional Water Planning Area	K - Lower Colorado
Groundwater Conservation District	GCD Does Not Exist
Latitude (decimal degrees)	30.423611
Latitude (degrees minutes seconds)	30° 25' 25" N
Longitude (decimal degrees)	-97.987222
Longitude (degrees minutes seconds)	097° 59' 14" W
Coordinate Source	+/- 1 Second
Aquifer Code	218GLRS - Glen Rose Limestone
Aquifer	Trinity
Aquifer Pick Method	Provided by Third Party
Land Surface Elevation (feet above sea level)	826
Land Surface Elevation Method	Digital Elevation Model -DEM
Well Depth (feet below land surface)	450
Well Depth Source	Owner
Drilling Start Date	
Drilling End Date	10/4/1972
Drilling Method	
Borehole Completion	

Well Type	Withdrawal of Water
Well Use	Public Supply
Water Level Observation	Historical
Water Quality Available	No
Pump	Submersible
Pump Depth (feet below land surface)	440
Power Type	Electric Motor
Annular Seal Method	
Surface Completion	
Owner	Draper Estates
Driller	M. J. Powell
Other Data Available	
Well Report Tracking Number	
Plugging Report Tracking Number	
U.S. Geological Survey Site Number	
Texas Commission on Environmental Quality Source Id	G2270058A
Groundwater Conservation District Well Number	
Owner Well Number	
Other Well Number	
Previous State Well Number	
Reporting Agency	Texas Water Development Board
Created Date	10/24/2011
Last Update Date	3/4/2020

Remarks	Well deepened by Calhoun to 480 feet.

Casing - No Data

Well Tests - No Data

Lithology - No Data

Annular Seal Range - No Data

Borehole - No Data

Plugged Back - No Data

Filter Pack - No Data

Packers - No Data

Texas Water Development Board

Texas Water Development Board (TWDB)
Groundwater Database (GWDB)
Well Information Report for State Well Number 58-33-407

groundwater division

Water Level Measurements

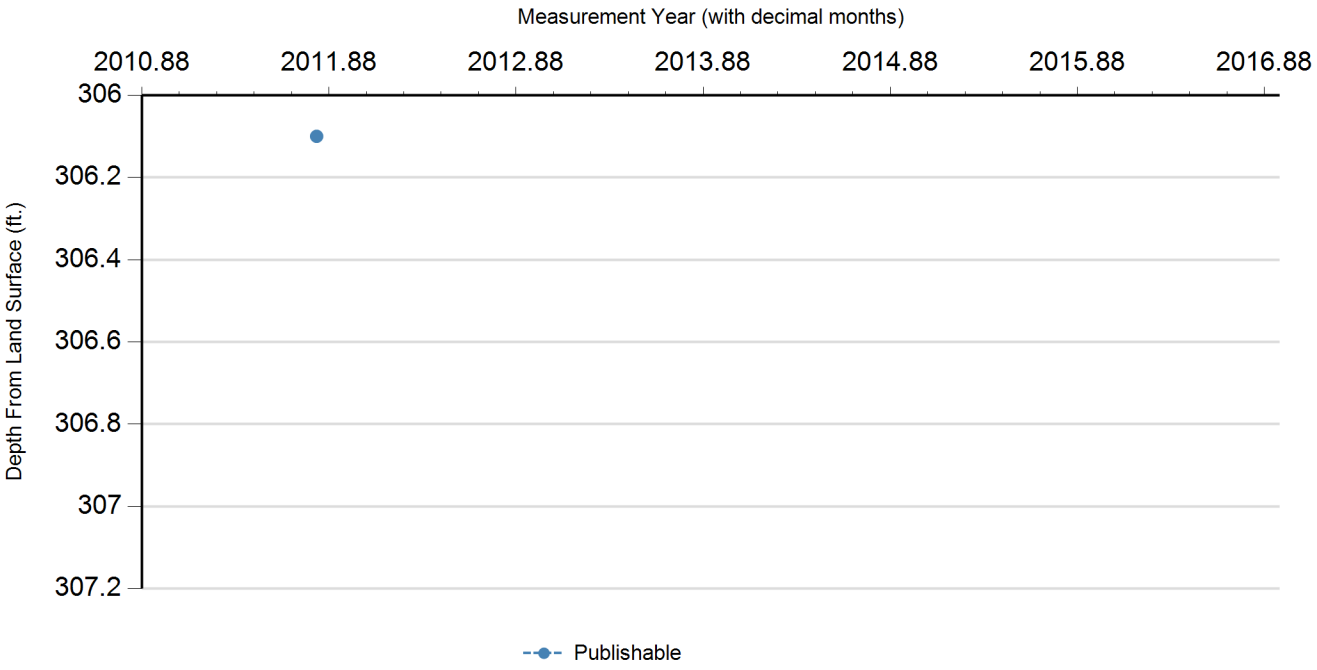

Status Code	Date	Time	Water Level (ft. below land surface)	Change value in ( ) indicates rise in level	Water Elevation (ft. above sea level)	Meas #	Measuring Agency	Method	Remark ID	Comments
P	10/26/2011		306.1		519.9	1	Texas Water Development Board	Steel Tape		
X	10/2/2012					1	Texas Water Development Board	Steel Tape	22	
X	10/7/2013					1	Texas Water Development Board	Steel Tape	22	
X	10/7/2014					1	Texas Water Development Board	Steel Tape	22	
X	1/8/2016					1	Texas Water Development Board	Steel Tape	22	

Code Descriptions

Status Code	Status Description
P	Publishable
X	No Measurement

Remark ID	Remark Description
22	Unable to measure because tape hangs before reaching water level

Water Quality Analysis - No Data Available

GWDB DISCLAIMER: Except where noted, all of the information provided in the Texas Water Development Board (TWDB) Groundwater Database (https://www.twdb.texas.gov/groundwater/data/gwdbrpt.asp) is believed to be accurate and reliable; however, the TWDB assumes no responsibility for any errors appearing in rules or otherwise. Further, TWDB assumes no responsibility for the use of the information provided. PLEASE NOTE that users of these data are responsible for checking the accuracy, completeness, currency and/or suitability of all information themselves. TWDB makes no guarantees or warranties as to the accuracy, completeness, currency, or suitability of the information provided via the Groundwater Database (GWDB). TWDB specifically disclaims any and all liability for any claims or damages that may result from providing GWDB data or the information it contains. For additional information or answers to questions concerning the TWDB GWDB, contact the Groundwater Data Team at GroundwaterData@twdb.texas.gov.

Attachment R

Soil Maps

Soil Map—Travis County, Texas
(Lago Vista Golf Course Land Application Area)

Map Scale: 1:17,500 if printed on A portrait (8.5" x 11") sheet.

N

Meters: 0 250 500 1000 1500

Feet: 0 500 1000 2000 3000

Map projection: Web Mercator Corner coordinates: WGS84 Edge tics: UTM Zone 14N WGS84

MAP LEGEND

Area of Interest (AOI)
- Area of Interest (AOI)

Soils
- Soil Map Unit Polygons
- Soil Map Unit Lines
- Soil Map Unit Points

Special Point Features
- Blowout
- Borrow Pit
- Clay Spot
- Closed Depression
- Gravel Pit
- Gravelly Spot
- Landfill
- Lava Flow
- Marsh or swamp
- Mine or Quarry
- Miscellaneous Water
- Perennial Water
- Rock Outcrop
- Saline Spot
- Sandy Spot
- Severely Eroded Spot
- Sinkhole
- Slide or Slip
- Sodic Spot
- Spoil Area
- Stony Spot
- Very Stony Spot
- Wet Spot
- Other
- Special Line Features

Water Features
- Streams and Canals

Transportation
- Rails
- Interstate Highways
- US Routes
- Major Roads
- Local Roads

Background
- Aerial Photography

MAP INFORMATION

The soil surveys that comprise your AOI were mapped at 1:24,000.

Please rely on the bar scale on each map sheet for map measurements.

Source of Map: Natural Resources Conservation Service
Web Soil Survey URL:
Coordinate System: Web Mercator (EPSG:3857)

Maps from the Web Soil Survey are based on the Web Mercator projection, which preserves direction and shape but distorts distance and area. A projection that preserves area, such as the Albers equal-area conic projection, should be used if more accurate calculations of distance or area are required.

This product is generated from the USDA-NRCS certified data as of the version date(s) listed below.

Soil Survey Area: Travis County, Texas
Survey Area Data: Version 26, Aug 30, 2024

Soil map units are labeled (as space allows) for map scales 1:50,000 or larger.

Date(s) aerial images were photographed: Data not available.

The orthophoto or other base map on which the soil lines were compiled and digitized probably differs from the background imagery displayed on these maps. As a result, some minor shifting of map unit boundaries may be evident.

Map Unit Legend

Map Unit Symbol	Map Unit Name	Acres in AOI	Percent of AOI
BlD	Brackett-Rock outcrop complex, 1 to 12 percent slopes	599.2	44.6%
BoF	Brackett-Rock outcrop-Real complex, 8 to 30 percent slopes	323.0	24.0%
PdD2	Pedernales fine sandy loam, 5 to 8 percent slopes, moderately eroded	7.5	0.6%
TaD	Eckrant very stony clay, 5 to 18 percent slopes	116.0	8.6%
TdF	Eckrant-Rock outcrop complex, 18 to 50 percent slopes	1.1	0.1%
TrC	Travis soils, 1 to 5 percent slopes	12.0	0.9%
TsD	Travis gravelly soils, 1 to 8 percent slopes	8.1	0.6%
VoD	Volente silty clay loam, 1 to 8 percent slopes	72.1	5.4%
W	Water	204.6	15.2%
Totals for Area of Interest		**1,343.6**	**100.0%**

Soil Map—Travis County, Texas
(Cedar Trees Land Application Area)

Map Scale: 1:16,300 if printed on A portrait (8.5" x 11") sheet.

N

Meters: 0 200 400 800 1200

Feet: 0 500 1000 2000 3000

Map projection: Web Mercator Corner coordinates: WGS84 Edge tics: UTM Zone 14N WGS84

MAP LEGEND

Area of Interest (AOI)
- Area of Interest (AOI)

Soils
- Soil Map Unit Polygons
- Soil Map Unit Lines
- Soil Map Unit Points

Special Point Features
- Blowout
- Borrow Pit
- Clay Spot
- Closed Depression
- Gravel Pit
- Gravelly Spot
- Landfill
- Lava Flow
- Marsh or swamp
- Mine or Quarry
- Miscellaneous Water
- Perennial Water
- Rock Outcrop
- Saline Spot
- Sandy Spot
- Severely Eroded Spot
- Sinkhole
- Slide or Slip
- Sodic Spot
- Spoil Area
- Stony Spot
- Very Stony Spot
- Wet Spot
- Other
- Special Line Features

Water Features
- Streams and Canals

Transportation
- Rails
- Interstate Highways
- US Routes
- Major Roads
- Local Roads

Background
- Aerial Photography

MAP INFORMATION

The soil surveys that comprise your AOI were mapped at 1:24,000.

Please rely on the bar scale on each map sheet for map measurements.

Source of Map: Natural Resources Conservation Service
Web Soil Survey URL:
Coordinate System: Web Mercator (EPSG:3857)

Maps from the Web Soil Survey are based on the Web Mercator projection, which preserves direction and shape but distorts distance and area. A projection that preserves area, such as the Albers equal-area conic projection, should be used if more accurate calculations of distance or area are required.

This product is generated from the USDA-NRCS certified data as of the version date(s) listed below.

Soil Survey Area: Travis County, Texas
Survey Area Data: Version 26, Aug 30, 2024

Soil map units are labeled (as space allows) for map scales 1:50,000 or larger.

Date(s) aerial images were photographed: Data not available.

The orthophoto or other base map on which the soil lines were compiled and digitized probably differs from the background imagery displayed on these maps. As a result, some minor shifting of map unit boundaries may be evident.

Map Unit Legend

Map Unit Symbol	Map Unit Name	Acres in AOI	Percent of AOI
BID	Brackett-Rock outcrop complex, 1 to 12 percent slopes	589.9	45.8%
BoF	Brackett-Rock outcrop-Real complex, 8 to 30 percent slopes	650.3	50.5%
TaD	Eckrant very stony clay, 5 to 18 percent slopes	44.7	3.5%
W	Water	2.7	0.2%
Totals for Area of Interest		**1,287.6**	**100.0%**

Attachment S

Soil Analysis for Proposed TLAP Area

ECS Southwest, LLP

Lago Vista TLAP Soil Sampling

Lago Vista
4616 Rimrock Drive, Lago Vista, Texas 78645

For: Garver USA
Near 810 Hester's Crossing, Suite 210, Round Rock, Texas 78681

ECS Project No. 51:4760

June 25, 2025

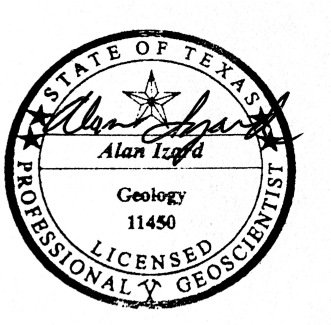

June 25, 2025

Ms. Ankita Jain
Garver USA
810 Hester's Crossing
Suite 210
Round rock, Texas 78681

ECS Project No. 51:4760

Reference: Proposal for Lago Vista TLAP Soil Sampling, Lago Vista, 4616 Rimrock Drive, Lago Vista, Travis County, Texas 78645

Dear Ms. Jain,

ECS Southwest, LLP (ECS) has prepared the following soil sampling report for Garver USA (Client) with this proposal for completing soil profiling and sampling in support of a Texas Land Application Permit (TLAP) amendment. This report is based on ECS Proposal No. 51:7432 Revision 2, dated March 10, 2025, and approved on March 31, 2025.

PROJECT INFORMATION

The subject property is near Lago Vista, Travis County, Texas. The City of Lago Vista wastewater treatment plant (WWTP) is being expanded. The expansion requires a modification to the existing Texas Land Application Permit (TLAP). The TLAP involves land application of treated wastewater. The TLAP amendment application process will require soil profiling and sampling compliant with Title 30 Texas Administrative Code (TAC) §222.73 as well as Texas Commission on Environmental Quality (TCEQ) Form 10053 Instructions (April 2024). Garver USA contacted ECS to provide a proposal for completing the required soil profiling and sampling to support the TLAP amendment.

PRELIMINARY ACTIVITIES

Health and Safety Plan

As part of this soil profiling and sampling scope of work, ECS prepared a site-specific health and safety plan (HASP) for the site. The HASP documented known or suspected hazards, applicable personal protective equipment (PPE) of site personnel, and emergency response procedures. Prior to commencing field activities, all ECS site personnel and applicable site personnel reviewed the site-specific HASP. A copy of the HASP with signatures is included in this report as Attachment 1.

Sampling and Analysis Plan

A detailed sampling and analysis plan (SAP) was written and submitted to the Client and the TCEQ. All parties agreed with the draft SAP, and a final draft sampling and analysis plan was submitted on April 15, 2025. Garver and the TCEQ concurred with the approach and information contained in the final draft SAP.

The final draft sampling and analysis plan is included in this report as *Attachment 2 – Sampling and Analysis Plan*, hereafter referred to as the SAP.

FIELD ACTIVITIES

The Lago Vista TLAP Area consists of 113 acres of land. Title 30 Texas Administrative Code (30TAC) §222.73 requires one (1) sampling grid for every 80 acres within a TLAP area, therefore two (2) sampling grids were required. The Lago Vista TLAP area contains two (2) soil types according to the United States Department of Agriculture (USDA) Web Soil Survey. The two types of soil are the Brackett-Rock outcrop-Real Complex (BoF) and the Brackett-Rock outcrop complex (BID). Detailed Map Unit (soil type) Descriptions of the BoF and the BID are included within Attachment 2. Each soil type represents approximately half of the surface area within the Lago Vista TLAP Area. *Figure 2 – Sample Grid and Profile Boring Location Map with Soil Types* illustrates the boundaries of the BoF and the BID map units within the Lago Vista TLAP Area.

A TLAP soil sampling regimen requires one (1) sampling grid per soil type within a TLAP area per 30TAC§222.73, as well as one (1) sampling grid per 80 acres. The two (2) soil sampling grids within the 113-acre Lago Vista TLAP Area satisfied both criteria. The nearly even surficial distribution of the two (2) soil types within this area, coupled with meeting the regulatory criteria, represented an ideal scenario for the two-grid sampling plan as depicted on *Figure 2 – Sample Grid and Profile Boring Location Map with Soil Types*.

Prior to initiating field activities, ECS notified Texas 811 to clear underground utilities. A copy of the email communication of Texas 811 ticket number 215290 is included as Attachment 6 of this report. On May 1-2, 2025, Mr. Tanner Miller, P.E., and Natalie Cuellar, an ECS Environmental Senior Project Manager, completed the profile boring and soil sampling activities. Pacific West Environmental and Infrastructure (Pacific West) completed the profile borings and the borings to collect the incremental aliquots for the composite samples. The soil samples were collected in plastic bags, labeled, shipped to the Texas A&M Soil, Water, and Forage Laboratory in College Station, Texas, under chain-of-custody procedures. The scope of services was completed as described in the SAP and the following sections. Refer to *Figure 1 – Topographic Vicinity Map with New and Existing TLAP Areas* in the SAP for more information. The locations of the two (2) profile borings and the associated grids are illustrated on Figure 2 of the SAP.

Profile Borings

ECS advanced two (2) soil borings at the location specified by the client. Each profile boring was drilled adjacent to their respective soil sampling grids. Soil samples were described using the United States Department of Agriculture (USDA) soil classification system, and included the following descriptors, as site-specific conditions allowed:

1) Total depth of the profile hole,
2) Primary rooting depth,
3) Secondary rooting depth,
4) Boundary descriptions (soil horizons),
5) Restrictive horizons,
6) Potential water bearing zones, and
7) Active water bearing zones.
8) Horizon descriptions which shall include:
    A) Depth of the horizon,
    B) Soil texture,
    C) Soil structure,
    D) Soil color,
    E) Mottling, and
    F) Percent coarse fragments.

Profile boring PB-1, advanced in the Brackett Rock outcrop complex (BID), was terminated at 18 inches below ground surface (bgs) due to refusal in limestone bedrock. Similarly, profile boring PB-2, advanced in the Brackett Rock outcrop-Real (BoF), was terminated at 12.5 inches bgs.

Boring logs of the profile borings are included in this report in Attachment 5. Supplemental data based on the numbered list above is provided in Attachment 3 of this report as *Table 1 – Additional Profile Boring Data*.

Composite Sampling

Two (2) 100-foot square soil sampling grids per soil type in the area were laid out for composite sampling using incremental sampling methodology (ISM) as described in the SAP. Composite samples collected from the two (2) grids (DU-1 and DU-2) were submitted for laboratory analysis as described in the following section.

Laboratory Analysis

The composite samples from the two (2) grids were analyzed by the Texas A&M Soil, Water, and Forage Laboratory in College Station, Texas, as described on page 70 of the TCEQ Form 10053 Instructions:

"Provide analyses of the soil in the land application site(s) for pH [2:1 (v/v) water/soil mixture]. electrical conductivity [2:1 (v/v) water/soil mixture]; sodium adsorption ratio (SAR) from a water saturated paste and its constituent parameters (water-soluble Na, Ca and Mg reported in mg/L), total Kjeldahl nitrogen (TKN); total nitrogen (organic-nitrogen + nitrate-nitrogen + ammonium-nitrogen); nitrate-nitrogen (from a 1 N KCl soil extract); potassium, phosphorous; calcium; magnesium; sulfur; and sodium. The nutrient parameters should be analyzed on a plant-available basis. Phosphorus shall be analyzed according to the Mehlich III procedure with inductively coupled plasma and potassium, calcium, magnesium, sodium, and sulfur may also be analyzed in the Mehlich III soil extract. Plant-available phosphorus, potassium, calcium, magnesium, sodium, and sulfur shall be reported on A dry weight basis in mg/kg; conductivity, in mmho/cm [same as deciSiemens/meter (dS/m)]; and pH, in standard units. When reporting the results, include all information concerning fertilizer recommendations. Provide a copy of this plan to the analytical laboratory prior to sample analysis."

The analytical laboratory data is tabulated and included in Attachment 3 of this report as Table 2. The analytical laboratory report is included as Attachment 4 of this report.

Thank you for the opportunity to provide our environmental consulting services on this project. If you have questions concerning the contents of this report, or if we can be of further service, please contact us at (713) 955-1980 or (972) 392-3222.

Respectfully submitted,

ECS SOUTHWEST, LLP

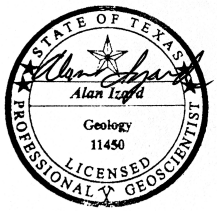

Alan Izard, P.G.
Senior Environmental Project Manager
Aizard@ecslimited.com
713-955-1980

Katherine Moore. P.G.
Director of Environmental Services
klmoore@ecslimited.com
970-743-9967

Attachments:
1. HASP
2. Sampling and Analysis Plan
3. Tables
4. Analytical Laboratory Results
5. Soil Boring Logs
6. Texas 811 Email

Attachment 1:

Health and Safety Plan

SITE SPECIFIC HEALTH AND SAFETY PLAN

Approvals		Initial
Date	4/30/2025	ALI
Prepared By	Alan Izard	ALI
Approved By	Tanner Miller	WTM

PROJECT INFORMATION
Date(s) of Field Work: May 1-2, 2025
Project Lago Vista TLAP Soil Sampling Number: 51:4760
Client: Garver USA
Site Address: Near Lago Vista Sunset Park
21817 RM 1431
Lago Vista, TX 78645
☒ Site Plan Attached
Scope of Work: Monitoring wells
Type of Project: ☒Environmental; ☐Geotechnical; ☐Industrial Process; ☐Other: _____
☐HAZWOPER Project: Training & Medical Surveillance must conform to 29 CFR 1910.120 & ECS Guidelines.
☐Client Specific Requirements (Attached)

KEY CONTACTS

Project Manager: Alan Izard	Phone: 806-787-8078	Cell: 806-787-8078
Project H&S Manager: Alan Izard	Phone: 806-787-8078	Cell: 806-787-8078
Site H&S Manager: Tanner Miller	Phone: 972-392-3222	Cell: 817-821-6707
Client Contact: Ankita Jain (Currently overseas)	Phone	Cell: 512-539-1972
Client's Site Contact : Jeffrey Meadows (Boss)	Phone:	Cell: 214-250-2231
Other: Other:	Phone:	Cell: NA
	Phone:	Cell: NA

Cedar Park Regional Medical Center

1401 Medical Parkway, Cedar Park, TX 78613
(512) 528-7000

Phone Number (emergency): *911*
☒Emergency Medical Facility Confirmed ☒Map to the hospital is attached

Police: 911 Fire: 911 Paramedic/Ambulance: 911
Poison Control Center: *1-800-222-1222*

EMERGENCY PROCEDURES

Medical Emergencies

1. Remove injured or exposed person(s) from immediate danger if possible.
2. Evacuate other on-site personnel to a safe place in an upwind direction until it is safe for work to resume.
3. If serious injury or life-threatening condition exists, call 911 - Paramedics, fire department, police, and hospital emergency room. Clearly describe location, injury, and conditions to dispatcher/hospital. Designate a person to direct emergency equipment to the injured person(s).
4. Provide first aid if necessary. Remove contaminated clothing only if this can be done without endangering the injured person(s).
5. Call the project manager and/or project health and safety officer.
6. Immediately implement steps to prevent recurrence of the accident.

Accidental Release of Hazardous Materials or Wastes

1. Evacuate all on-site personnel to a safe place in an upwind direction until the PM or PHSO determines that it is safe for work to resume.
2. Immediately instruct a designated person to contact the PM or PHSO.
3. Contain spill if it is possible and it can be done safely.
4. Initiate cleanup.

General Emergencies
In the case of fire, flood, explosion, or other hazard, work shall be halted, and the local police/ fire department shall be notified by calling 911. All on-site personnel will be immediately evacuated to a safe place.

Emergency Equipment Onsite
☒First Aid Kit; ☐Fire Extinguisher; ☐Eye Wash; ☐Other: _____

CHEMICAL HAZARDS

CHEMICAL	EXPOSURE LIMITS		KNOWN/EXPECTED CONCENTRATIONS	HEALTH HAZARDS
	OSHA	ACGIH		
VOCs - - Chlorinated	0.5 ppm	1 ppm	Unknown	Carcinogen, Nephrotoxin & Hepatotoxin
--BTEX	0.5 ppm (benzene)	0.5 ppm (benzene)	Unknown	Carcinogen, Nephrotoxin & Hepatotoxin
Petroleum hydrocarbons	500 ppm	300 ppm	Unknown	Neurotoxin, Carcinogen
Methane	10,000 ppm or 10% LEL		Unknown	Burn, explosion, asphixiation
TENORM			Unknown	Radiation Exposure

PHYSICAL HAZARDS:
☒Heat Stress ☒Cold Stress ☐Wet ☒Noise
☒Slip, Trip, & Fall ☒Heavy Equipment ☒Electrical Hazards
☒Underground Hazards: One Call Ticket Date Called: Driller
☒Private Locator Utilized: ☒Overhead Hazards
☒Traffic ☐Excavations/Trenching ☐Confined Space
☐Other: _____

BIOLOGICAL HAZARDS:
☐Pathogens: _____ ☐Mold: _____
☐Plants:_____ ☒Insects: *Mosquitos, Stinging Insects*
☐Other Fauna: _____ ☐Other: _____

SITE CONTROLS: *Only essential rig and drill personnel (operator, helpers, & geologist) will be allowed around the drill rig when in operation. If necessary, "Caution" tape will be used to isolate the work area from non-essential personnel.*

PERSONAL DECONTAMINATION PROCEDURES: *Level D PPE is anticipated to be adequate for the scope of work proposed at the site. Soil and groundwater sampling will be performed with nitrile or equivalent gloves. Gloves will be changed between each sample to eliminate cross contamination.*

PERSONAL PROTECTIVE EQUIPMENT
☒Eye Protection: ☒Safety Glasses; ☐ Splash Goggles; ☐Face Shield; ☐Other: _____
☒Hard Hat ☒Steel-Toed Boots ☐Chemical Resistant Boots ☒Traffic Safety Vest
☒Hearing Protection: _____ ☐Protective Clothing: ☐Tyvek®; ☐Coated Tyvek®; ☐Sarinex; ☐Other: _____
☒Gloves: ☒Nitrile; ☐PVC; ☐Neoprene; ☒cloth/leather; ☐Other _____ ☐Respiratory: ☐Full-Face APR;
☐ Half-Face APR ☐Filter: ☐Organic Vapor; ☐Acid Gas; ☐HEPA; ☐Other: _____ ☐Other: _____

If air monitoring in the workers' breathing zone exceeds *10ppm* for 60 seconds or longer, upgrade to Level C (PPR) or vacate the immediate area.

MONITORING EQUIPMENT
☒Photo Ionization Detector with *10.6* eV lamp ☐Flame Ionization Detector
☒Combustible Gas Indicator ☒Oxygen Meter

DRIVING DIRECTIONS TO NEAREST HOSPITAL FROM MEETING LOCATION

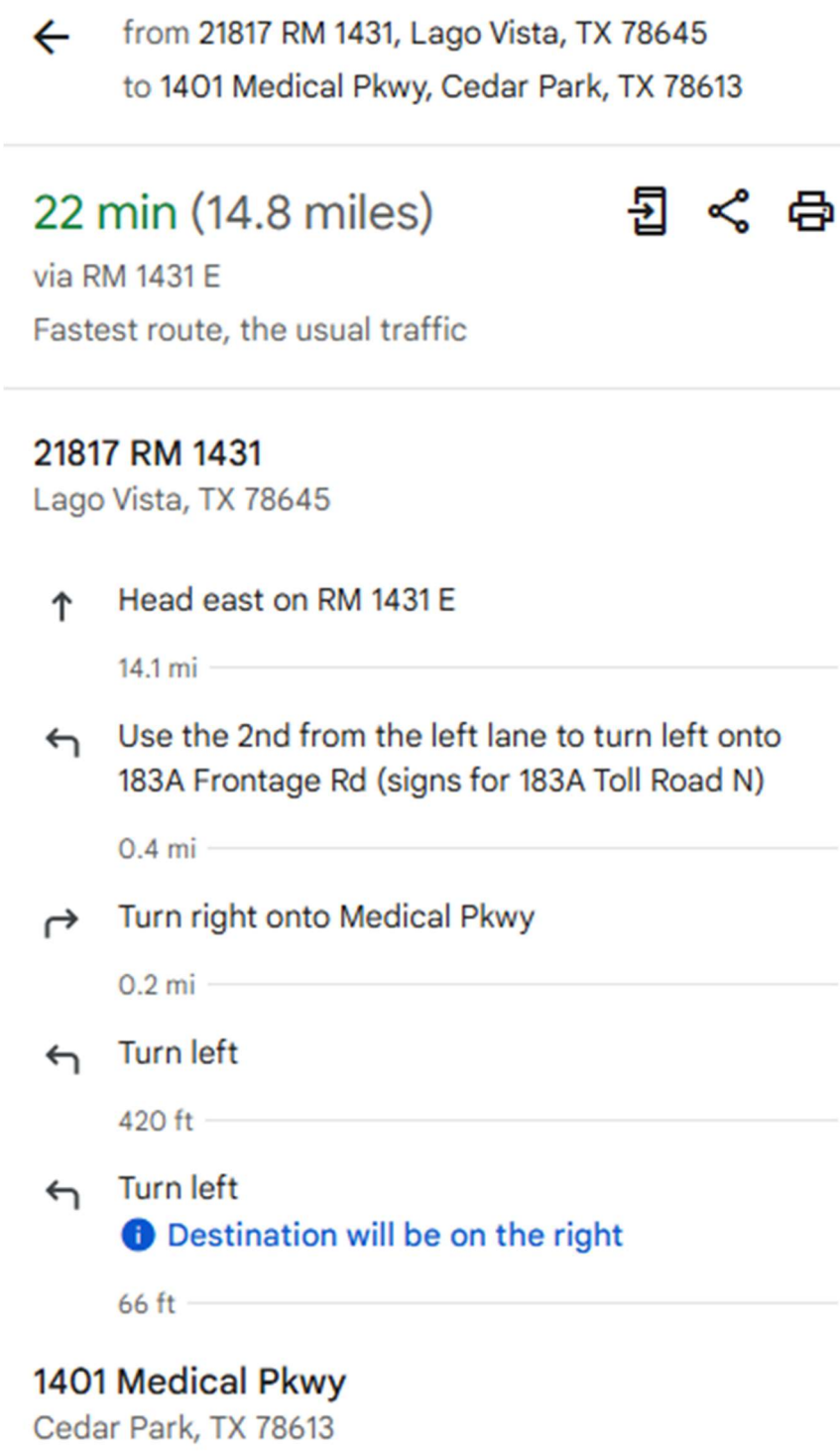

from 21817 RM 1431, Lago Vista, TX 78645
to 1401 Medical Pkwy, Cedar Park, TX 78613

22 min (14.8 miles)

via RM 1431 E

Fastest route, the usual traffic

21817 RM 1431
Lago Vista, TX 78645

Head east on RM 1431 E

14.1 mi

Use the 2nd from the left lane to turn left onto 183A Frontage Rd (signs for 183A Toll Road N)

0.4 mi

Turn right onto Medical Pkwy

0.2 mi

Turn left

420 ft

Turn left

Destination will be on the right

66 ft

1401 Medical Pkwy
Cedar Park, TX 78613

MAP TO NEAREST HOSPITAL FROM MEETING LOCATION

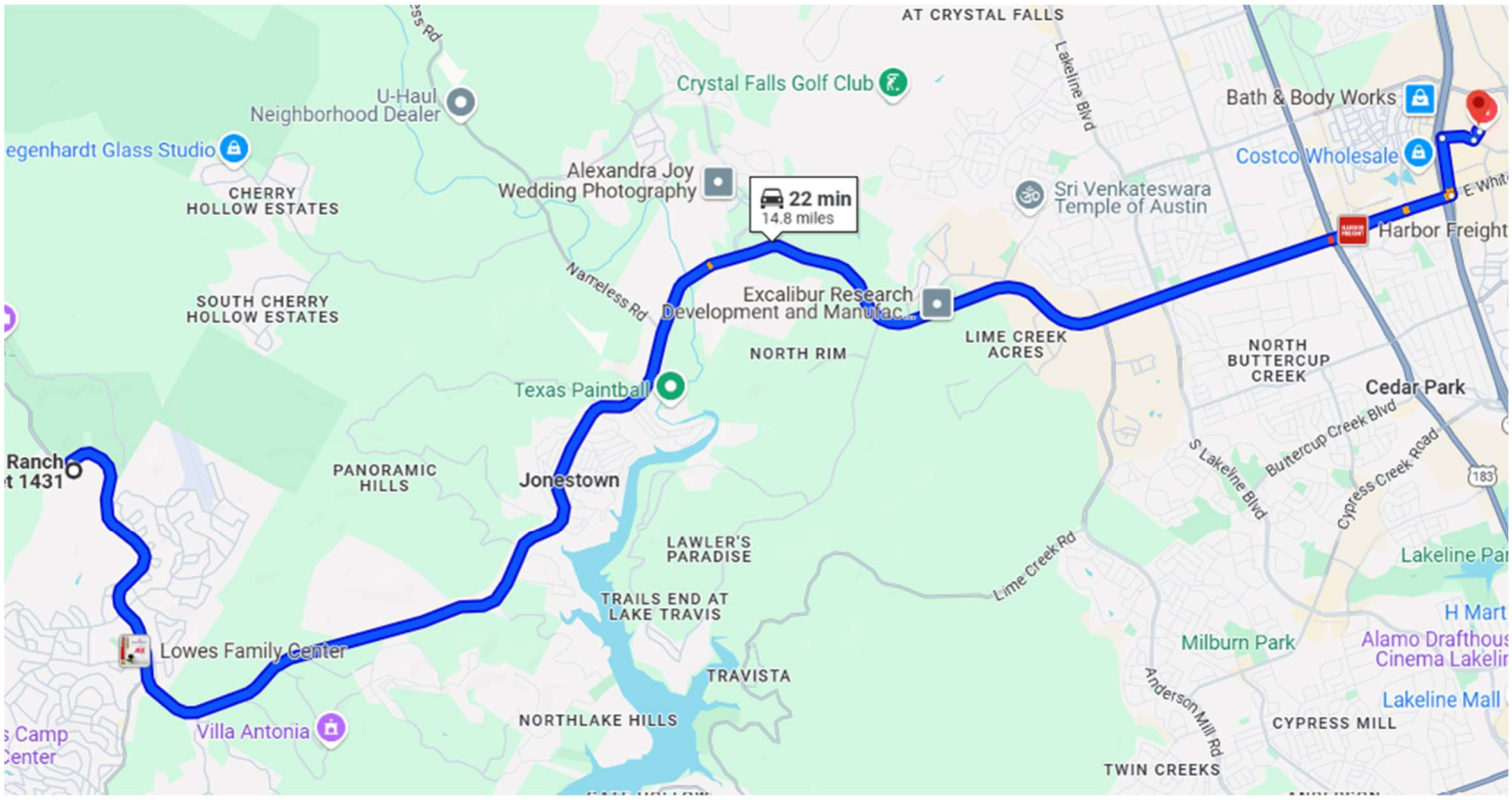

TAILGATE SAFETY MEETING

Date: May 1-2, 2025

Project Name: Lago Vista TLAP Soil Sampling

Project Number: TX 51:4760

Site Location: Near Lago Vista Sunset Park, 21817 RM 1431, Lago Vista, TX 78645

Scope of Work for Day: Soil boring and sampling

Lead By: Tanner Miller, P.E.

Name (printed)	Signature
Tanner Miller	T_MM
Natalie Cuellar	Natalie Cuellar
Eric Castillo	Eric Castillo
Edgar Soto	Edgar Soto

Attachment 2:

Sampling and

Analysis Plan

Draft Sampling Plan for Lago Vista TLAP Project – Lago Vista, Texas
by
ECS Southwest, LLP on behalf of Garver USA – April 16, 2025
ECS Project No 51-4760

INTRODUCTION

ECS has been contacted by Garver USA to provide soil sampling in support of a Texas Land Application Permit (TLAP) modification for the Lago Vista project. This sampling plan provides details regarding the sample collection methodology, analytes and other considerations, supported by Figures 1-3 in the attachment section. *Figure 1 – Topographic Vicinity Map with TLAP Area*, illustrates the general vicinity of the project area including a portion of the Lago Vista city limits and defines the area to which treated wastewater will be applied, hereafter referred to as the "Lago Vista TLAP Area."

The Lago Vista TLAP Area consists of 113 acres of land. Title 30 Texas Administrative Code (30TAC) §222.73 requires one (1) sampling grid for every 80 acres within a TLAP area, therefore two (2) sampling grids are required. The Lago Vista TLAP area contains two (2) soil types according to the United States Department of Agriculture (USDA) Web Soil Survey. The two types of soil are the Brackett-Rock outcrop-Real Complex (BoF) and the Brackett-Rock outcrop complex (BID). Detailed Map Unit (soil type) Descriptions of the BoF and the BID are included as an attachment to this sampling plan. Each soil type represents approximately half of the surface area within the Lago Vista TLAP Area. *Figure 2 – Sample Grid and Profile Boring Location Map with Soil Types* illustrates the boundaries of the BoF and the BID map units within the Lago Vista TLAP Area.

A TLAP soil sampling regimen requires one (1) sampling grid per soil type within a TLAP area per 30TAC§222.73, as well as one (1) sampling grid per 80 acres. The two (2) proposed soil sampling grids within the 113-acre Lago Vista TLAP Area satisfy both criteria. The nearly even surficial distribution of the two (2) soil types within this area, coupled with meeting the regulatory criteria, represents an ideal scenario for this two-grid sampling plan as depicted on *Figure 2 – Sample Grid and Profile Boring Location Map with Soil Types.*

SOIL SAMPLING METHODOLGY

Decision Units (Grids)

Composite sampling will be completed using a modified form of Incremental Sampling Methodology (ISM). This method relies on a statistical-based approach to soil assessment on projects with large areal extent. Measured increments or aliquots of surface soil from multiple locations within a two-dimensional grid can be composited to estimate a mean concentration of chemicals of potential concern (COPCs) within reasonable confidence intervals. Collecting sample increments from multiple depth intervals in the same manner will create composite samples from these intervals to produce a three-dimensional model. Composite samples will be collected in the two (2) locations.

ECS personnel will perform reconnaissance of the Lago Vista TLAP Area to establish suitable grid locations near the proposed locations presented on *Figure 2*. The 100-foot square grids, known as decision units,

will be laid-out using a compass, a cloth measuring tape, survey laths and pin flags. First, a 30-foot straight north-south line will be established. Then, a 40 east-west line at a right angle originating from the same point as the north-south will be established and squared using the Pythagorean Theorem. The north-south and east-west lines will be extrapolated to 100 feet, placing pin flags every 10 feet. From there, the grid will be completed by building on the established right angle. Pin flags will be placed every 10 feet along the north-south and east-west lines, creating a 100-foot square grid subdivided into 100 square subunits measuring 10-feet by 10-feet each. Survey laths will be used for the decision unit corners. Each square will be designated a number "1" through "100."

Composite sample aliquots will be collected from 15 of the numbered subunits based upon the sample design of 15%. A random number generator will be used to select 15 numbers without repeats between "1" and "100," inclusive. These random numbers will correspond with the numbered subunits of the decision unit, determining which subunits to collect the aliquots from. Refer to "*Figure 3 - Typical 100-foot x 100-foot Decision Unit Grid Example,"* for more information. The aliquots will be collected from the following depths below ground surface (bgs):

- 0-6 inches bgs
- 6-18 inches bgs
- 18-30 inches bgs

Each decision unit will generate three (3) composite samples. This amounts to a total of six (6) composite samples (collected in duplicate) from the two (2) decision units for the Lago Vista TLAP Area.

Sample Collection

The soil borings will be advanced using a track-mounted direct push drilling rig with a core barrel sampling probe. Soil samples will be described using the United States Department of Agriculture (USDA) soil classification system. The core barrel probe will be lined with a single-use 3-foot clear acetate sleeve. After the probe is advanced, the soil-filled clear acetate tube will be removed from the probe, cut open, and the soil will be recovered. Aliquots from appropriate depth intervals from the subunits will be composited in decontaminated stainless steel mixing bowls with stainless steel utensils.

Gravelly soil sometimes has a tendency to clog core barrels used with direct push drilling rigs resulting in poor recovery and difficulty ascertaining accurate depth measurements from which the soil was recovered. Alternatively, ECS may elect to collect the soil samples using a hand auger along with other hand tools.

LABORATORY ANALYSIS

The soil samples will be collected in laboratory-supplied sample containers, labeled, shipped to the Texas A&M Soil, Water, and Forage Laboratory in College Station, Texas, under chain-of-custody procedures.

The soil samples will be analyzed in duplicate, and as described on page 70 of the Texas Commission on Environmental Quality (TCEQ) Form 10053 Instructions:

"Provide analyses of the soil in the land application site(s) for pH [2:1 (v/v) water/soil mixture]; electrical conductivity [2:1 (v/v) water/soil mixture]; sodium adsorption ratio (SAR) from a water saturated paste and its constituent parameters (water-soluble Na, Ca and Mg reported in mg/L); total Kjeldahl nitrogen (TKN); total nitrogen (organic-nitrogen + nitrate-nitrogen + ammonium-nitrogen); nitrate-nitrogen (from a 1 N KCl soil extract); potassium, phosphorous; calcium; magnesium; sulfur; and sodium. The nutrient parameters should be analyzed on a plant-available basis. Phosphorus shall be analyzed according to the Mehlich III procedure with inductively coupled plasma and potassium, calcium, magnesium, sodium, and sulfur may also be analyzed in the Mehlich III soil extract. Plant-available phosphorus, potassium, calcium, magnesium, sodium and sulfur shall be reported on a dry weight basis in mg/kg; electrical conductivity, in mmho/cm [same as deciSiemens/meter (dS/m)]; and pH, in standard units. When reporting the results, include all information concerning fertilizer recommendations. Provide a copy of this plan to the analytical laboratory prior to sample analysis."

The samples will be analyzed under a standard 7-10 business-day turnaround time (TAT) unless method-specific holding times are shorter. Samples for permeability and grain size analysis will be analyzed by the ECS geotechnical laboratory in Houston, Texas or the Texas A&M Soil Water and Forage Laboratory in College Station, Texas.

DISCUSSION

Shallow bedrock and characteristics of the BoF and BID soil types may present the need to deviate from some 30TAC§222.73 criteria if the profiles presented on the USDA Web Survey reports are accurate. Soil depth and depth to bedrock in the BoF and the BID are presented by the USDA Web Soil Survey as follows:

<u>BoF - Brackett-Rock outcrop-Real complex</u>

Typical Profile
- A – 0 to 6 inches: gravelly clay loam
- Bk – 6 to 14 inches: gravelly clay loam
- Cr – 14-60 inches: bedrock

<u>BID - Brackett-Rock outcrop complex</u>

Typical Profile
- A – 0 to 6 inches: gravelly clay loam
- Bw – 6 to 18 inches: clay loam
- Cr – 18 to 60 inches: bedrock

Shallow bedrock would preclude collecting a soil sample from 30 inches bgs simply because no soil exists at that depth if bedrock is encountered between 14 and 18 inches bgs (bedrock is not soil). If fill has been placed at the Lago Vista TLAP Area, then soil may exist at 30 inches bgs at the location. Soil surveys are not always 100% accurate. Potential solutions could be the following:

Alternative 1 – Do not collect the 30-inch sample. Collect the 6-inch sample and a "deep as possible sample." This would likely result in variability at the different subunits. *This alternative would probably be the easiest.*

Alternative 2 – Create a different set of sampling intervals that are compatible with the depth to bedrock at each subunit location. For example, if bedrock is encountered at 18 inches bgs at a particular subunit, a new set of intervals could be created such as 4-inches, 10-inches and 16-inches bgs. This would likely result in variability at the different subunits due to different depths to bedrock at each subunit. This alternative would require the field geologist to log each borehole to calculate the appropriate sample depth intervals and document the depth to bedrock. *This is probably the best alternative but would be more time consuming.*

Alternative 3 – Use a drilling rig capable of coring bedrock or a drilling rig capable of air rotary drilling. This alternative would enable reaching 30-inches deep regardless of the material encountered. However, grain size and permeability could not be analyzed because the material would be mechanically altered by either drilling method. Grain size and permeability could still be tested for the shallow and intermediate samples. *This alternative would be expensive, partially compliant, and time-consuming.*

CONCLUSION

ECS seeks to gain concurrence from the TCEQ, Garver and other relevant stakeholders with respect to this Sampling Plan. A preliminary site visit may be required to evaluate the site more thoroughly to determine the sample collection method (drilling versus hand auguring). Additionally, ECS believes that a preliminary site visit would be prudent to determine whether one of the alternatives listed above would be necessary to address the shallow bedrock issue. We look forward to discussing and finalizing this draft sampling plan.

Attachments: Figures 1-3
Soil Map Unit Descriptions

Figures

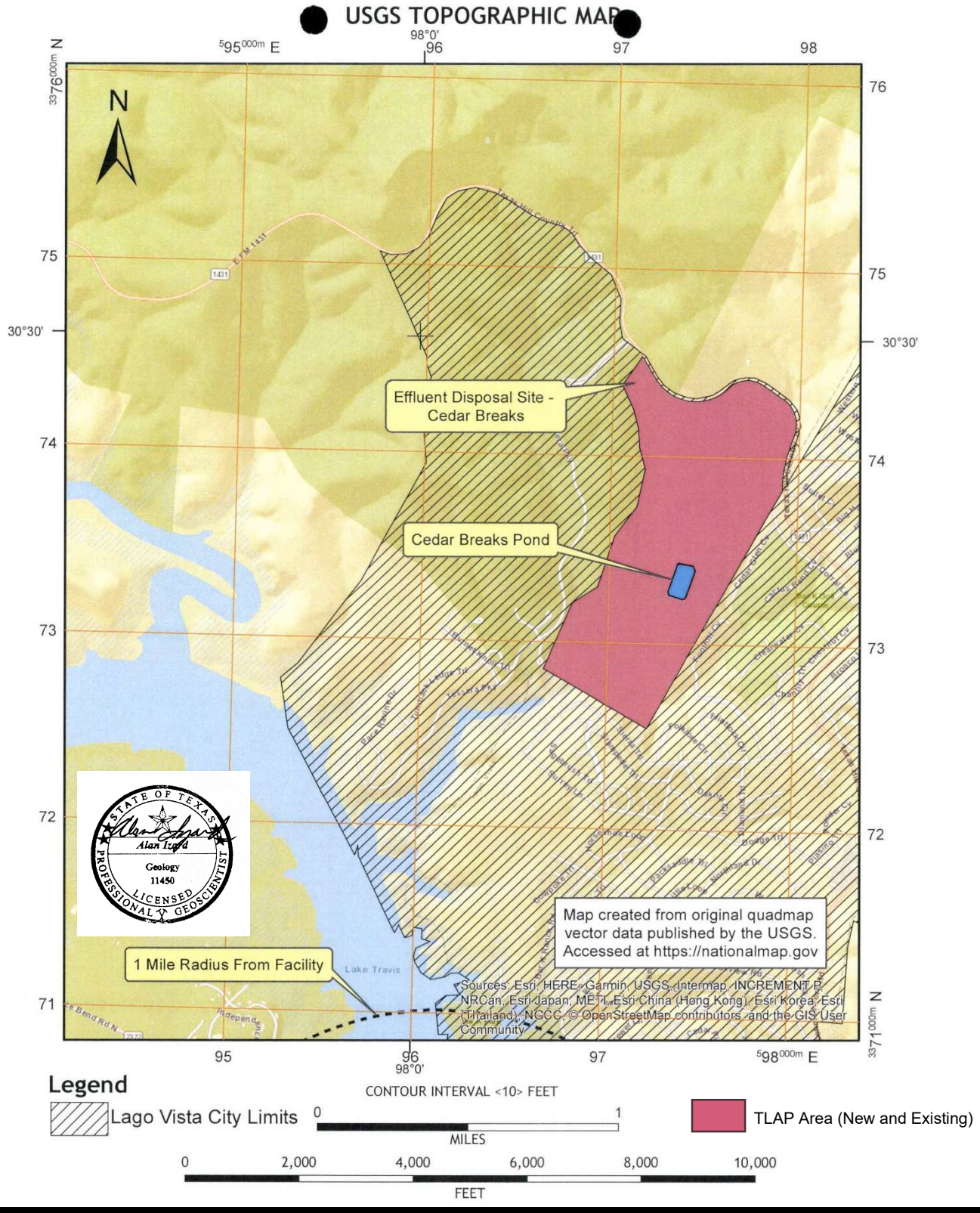

Figure 1 – Topographic Vicinity Map with New and Existing TLAP Area

Lago Vista
4616 Rimrock Drive
Lago Vista, Texas 78681

Garver USA

GEOLOGIST: ALI

SCALE: NTS

Project NO. 51:4760

DATE:4/11/2025

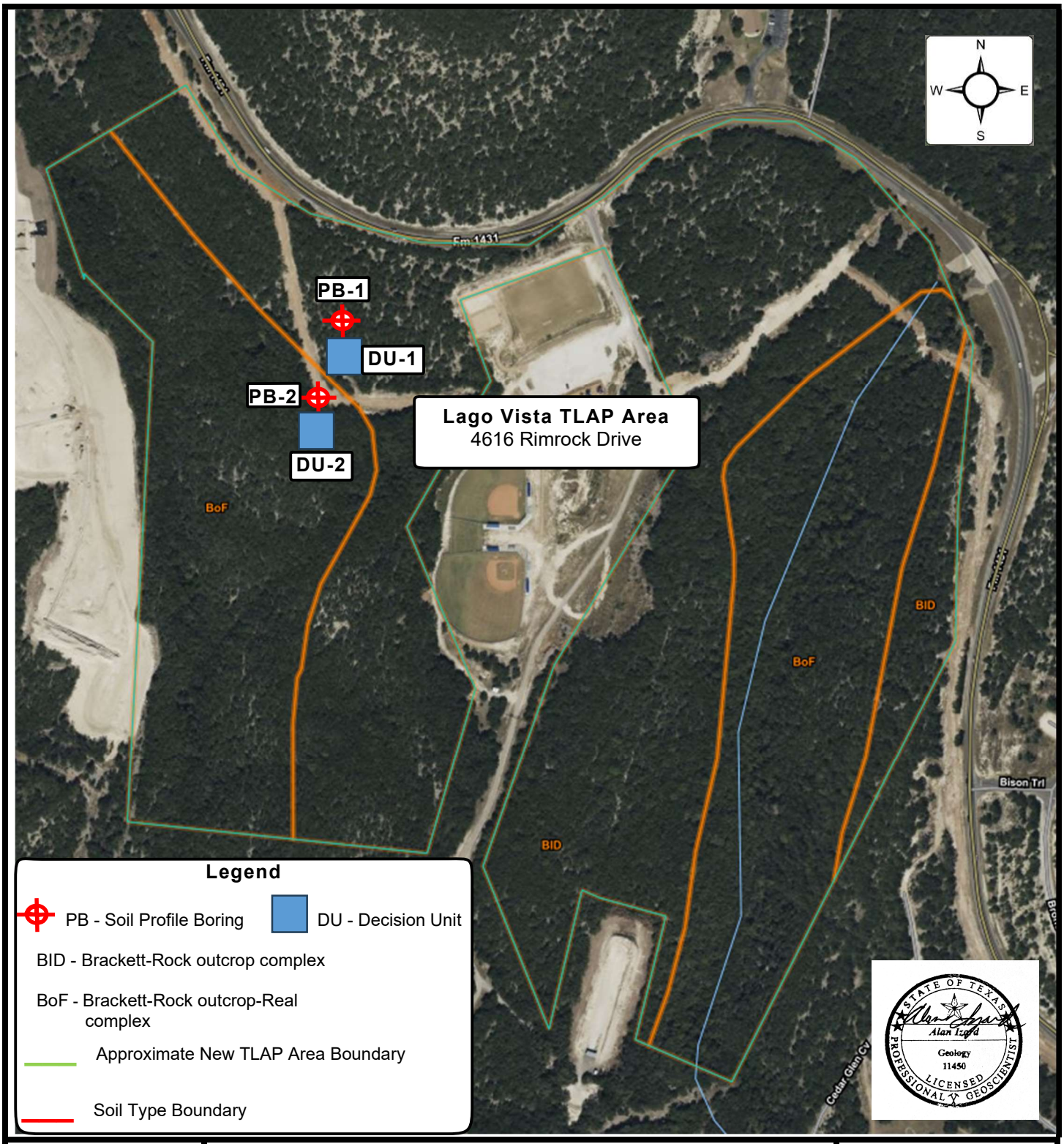

Figure 2 – Sample Grid and Profile Boring Location Map with Soil Types

Lago Vista
4616 Rimrock Drive
Lago Vista, Texas 78681

Garver USA

GEOLOGIST: ALI

SCALE: NTS

Project No. 51:4760

DATE:6/23/2025

Figure 3 - Typical 100-foot x 100-foot Decision Unit Grid Example
Lago Vista TLAP Sampling Plan

1	11	21	31	41	51	61	71	81	91
2	12	22	32	42	52	62	72	82	92
3	13	23	33	43	53	63	73	83	93
4	14	24	34	44	54	64	74	84	94
5	15	25	35	45	55	65	75	85	95
6	16	26	36	46	56	66	76	86	96
7	17	27	37	47	57	67	77	87	97
8	18	28	38	48	58	68	78	88	98
9	19	29	39	49	59	69	79	89	99
10	20	30	40	50	60	70	80	90	100

15 Random Numbers: 91, 57, 70, 42, 34, 95, 29, 92, 31, 41, 27, 68, 8, 81, 32

Random Number Generator: Σ Calcultor Soup® Online Calculators

How to Generate Random Numbers

Step 1 - Select Range 0 - 100
Step 2 - Select number of list items (15)
Step 3 - Select "no" on allow repeats, and sort "low to high" if desired
Step 4 - Press calculate
Step 5 - Write down the 15 numbers generated on field form
Step 6 - Mark cells in decision unit grid

Soil Map Unit Descriptions

Map Unit Description

The map units delineated on the detailed soil maps in a soil survey represent the soils or miscellaneous areas in the survey area. The map unit descriptions in this report, along with the maps, can be used to determine the composition and properties of a unit.

A map unit delineation on a soil map represents an area dominated by one or more major kinds of soil or miscellaneous areas. A map unit is identified and named according to the taxonomic classification of the dominant soils. Within a taxonomic class there are precisely defined limits for the properties of the soils. On the landscape, however, the soils are natural phenomena, and they have the characteristic variability of all natural phenomena. Thus, the range of some observed properties may extend beyond the limits defined for a taxonomic class. Areas of soils of a single taxonomic class rarely, if ever, can be mapped without including areas of other taxonomic classes. Consequently, every map unit is made up of the soils or miscellaneous areas for which it is named, soils that are similar to the named components, and some minor components that differ in use and management from the major soils.

Most of the soils similar to the major components have properties similar to those of the dominant soil or soils in the map unit, and thus they do not affect use and management. These are called noncontrasting, or similar, components. They may or may not be mentioned in a particular map unit description. Some minor components, however, have properties and behavior characteristics divergent enough to affect use or to require different management. These are called contrasting, or dissimilar, components. They generally are in small areas and could not be mapped separately because of the scale used. Some small areas of strongly contrasting soils or miscellaneous areas are identified by a special symbol on the maps. If included in the database for a given area, the contrasting minor components are identified in the map unit descriptions along with some characteristics of each. A few areas of minor components may not have been observed, and consequently they are not mentioned in the descriptions, especially where the pattern was so complex that it was impractical to make enough observations to identify all the soils and miscellaneous areas on the landscape.

The presence of minor components in a map unit in no way diminishes the usefulness or accuracy of the data. The objective of mapping is not to delineate pure taxonomic classes but rather to separate the landscape into landforms or landform segments that have similar use and management requirements. The delineation of such segments on the map provides sufficient information for the development of resource plans. If intensive use of small areas is planned, however, onsite investigation is needed to define and locate the soils and miscellaneous areas.

An identifying symbol precedes the map unit name in the map unit descriptions. Each description includes general facts about the unit and gives important soil properties and qualities.

Soils that have profiles that are almost alike make up a *soil series*. All the soils of a series have major horizons that are similar in composition, thickness, and arrangement. Soils of a given series can differ in texture of the surface layer, slope, stoniness, salinity, degree of erosion, and other characteristics that affect their use. On the basis of such differences, a soil series is divided into *soil phases*. Most of the areas shown on the detailed soil maps are phases of soil series. The name of a soil phase commonly indicates a feature that affects use or management. For example, Alpha silt loam, 0 to 2 percent slopes, is a phase of the Alpha series.

Some map units are made up of two or more major soils or miscellaneous areas. These map units are complexes, associations, or undifferentiated groups.

A *complex* consists of two or more soils or miscellaneous areas in such an intricate pattern or in such small areas that they cannot be shown separately on the maps. The pattern and proportion of the soils or miscellaneous areas are somewhat similar in all areas. Alpha-Beta complex, 0 to 6 percent slopes, is an example.

An *association* is made up of two or more geographically associated soils or miscellaneous areas that are shown as one unit on the maps. Because of present or anticipated uses of the map units in the survey area, it was not considered practical or necessary to map the soils or miscellaneous areas separately. The pattern and relative proportion of the soils or miscellaneous areas are somewhat similar. Alpha-Beta association, 0 to 2 percent slopes, is an example.

An *undifferentiated group* is made up of two or more soils or miscellaneous areas that could be mapped individually but are mapped as one unit because similar interpretations can be made for use and management. The pattern and proportion of the soils or miscellaneous areas in a mapped area are not uniform. An area can be made up of only one of the major soils or miscellaneous areas, or it can be made up of all of them. Alpha and Beta soils, 0 to 2 percent slopes, is an example.

Some surveys include *miscellaneous areas*. Such areas have little or no soil material and support little or no vegetation. Rock outcrop is an example.

Additional information about the map units described in this report is available in other soil reports, which give properties of the soils and the limitations, capabilities, and potentials for many uses. Also, the narratives that accompany the soil reports define some of the properties included in the map unit descriptions.

Travis County, Texas

BoF—Brackett-Rock outcrop-Real complex, 8 to 30 percent slopes

Map Unit Setting

National map unit symbol: 2t2m3
Elevation: 470 to 1,900 feet
Mean annual precipitation: 32 to 37 inches
Mean annual air temperature: 66 to 68 degrees F

Frost-free period: 230 to 265 days
Farmland classification: Not prime farmland

Map Unit Composition

Brackett and similar soils: 38 percent
Rock outcrop: 25 percent
Real and similar soils: 22 percent
Minor components: 15 percent
Estimates are based on observations, descriptions, and transects of the mapunit.

Description of Brackett

Setting

Landform: Ridges
Landform position (two-dimensional): Shoulder, backslope, footslope
Landform position (three-dimensional): Side slope
Down-slope shape: Linear
Across-slope shape: Convex
Parent material: Residuum weathered from limestone

Typical profile

A - 0 to 6 inches: gravelly clay loam
Bk - 6 to 14 inches: gravelly clay loam
Cr - 14 to 60 inches: bedrock

Properties and qualities

Slope: 8 to 30 percent
Surface area covered with cobbles, stones or boulders: 0.0 percent
Depth to restrictive feature: 10 to 20 inches to paralithic bedrock
Drainage class: Well drained
Runoff class: High
Capacity of the most limiting layer to transmit water (Ksat): Moderately low to high (0.06 to 1.98 in/hr)
Depth to water table: More than 80 inches
Frequency of flooding: None
Frequency of ponding: None
Calcium carbonate, maximum content: 90 percent
Maximum salinity: Nonsaline to very slightly saline (0.0 to 2.0 mmhos/cm)
Available water supply, 0 to 60 inches: Very low (about 1.8 inches)

Interpretive groups

Land capability classification (irrigated): None specified
Land capability classification (nonirrigated): 7e
Hydrologic Soil Group: D
Ecological site: R081CY362TX - Steep Adobe 29-35 PZ
Hydric soil rating: No

Description of Rock Outcrop

Setting

Landform: Ridges

Landform position (two-dimensional): Backslope, footslope
Landform position (three-dimensional): Side slope, base slope
Down-slope shape: Convex
Across-slope shape: Convex
Parent material: Limestone

Typical profile

R - 0 to 80 inches: bedrock

Properties and qualities

Slope: 8 to 30 percent
Depth to restrictive feature: 0 to 2 inches to lithic bedrock
Runoff class: High
Capacity of the most limiting layer to transmit water (Ksat): Moderately low to high (0.06 to 1.98 in/hr)

Interpretive groups

Land capability classification (irrigated): None specified
Land capability classification (nonirrigated): 8
Hydrologic Soil Group: D
Hydric soil rating: No

Description of Real

Setting

Landform: Ridges
Landform position (two-dimensional): Backslope, footslope
Landform position (three-dimensional): Base slope, side slope
Down-slope shape: Convex
Across-slope shape: Convex
Parent material: Residuum weathered from limestone

Typical profile

A - 0 to 4 inches: gravelly loam
Ak - 4 to 14 inches: extremely gravelly loam
Cr - 14 to 40 inches: bedrock

Properties and qualities

Slope: 8 to 30 percent
Surface area covered with cobbles, stones or boulders: 0.0 percent
Depth to restrictive feature: 8 to 19 inches to paralithic bedrock
Drainage class: Well drained
Runoff class: Medium
Capacity of the most limiting layer to transmit water (Ksat): Moderately low to high (0.06 to 1.98 in/hr)
Depth to water table: More than 80 inches
Frequency of flooding: None
Frequency of ponding: None
Calcium carbonate, maximum content: 70 percent
Maximum salinity: Nonsaline to very slightly saline (0.0 to 2.0 mmhos/cm)
Available water supply, 0 to 60 inches: Very low (about 1.1 inches)

Interpretive groups

Land capability classification (irrigated): None specified

Land capability classification (nonirrigated): 7s
Hydrologic Soil Group: D
Ecological site: R081CY362TX - Steep Adobe 29-35 PZ
Hydric soil rating: No

Minor Components

Eckrant

Percent of map unit: 10 percent
Landform: Ridges
Landform position (two-dimensional): Summit, shoulder, backslope, footslope
Landform position (three-dimensional): Crest
Down-slope shape: Linear
Across-slope shape: Convex
Ecological site: R081BY350TX - Steep Rocky 23-31 PZ
Hydric soil rating: No

Volente

Percent of map unit: 5 percent
Landform: Drainageways
Landform position (two-dimensional): Footslope, toeslope, backslope
Landform position (three-dimensional): Base slope
Down-slope shape: Linear
Across-slope shape: Concave
Ecological site: R081CY357TX - Clay Loam 29-35 PZ
Hydric soil rating: No

Data Source Information

Soil Survey Area: Travis County, Texas
Survey Area Data: Version 26, Aug 30, 2024

Map Unit Description

The map units delineated on the detailed soil maps in a soil survey represent the soils or miscellaneous areas in the survey area. The map unit descriptions in this report, along with the maps, can be used to determine the composition and properties of a unit.

A map unit delineation on a soil map represents an area dominated by one or more major kinds of soil or miscellaneous areas. A map unit is identified and named according to the taxonomic classification of the dominant soils. Within a taxonomic class there are precisely defined limits for the properties of the soils. On the landscape, however, the soils are natural phenomena, and they have the characteristic variability of all natural phenomena. Thus, the range of some observed properties may extend beyond the limits defined for a taxonomic class. Areas of soils of a single taxonomic class rarely, if ever, can be mapped without including areas of other taxonomic classes. Consequently, every map unit is made up of the soils or miscellaneous areas for which it is named, soils that are similar to the named components, and some minor components that differ in use and management from the major soils.

Most of the soils similar to the major components have properties similar to those of the dominant soil or soils in the map unit, and thus they do not affect use and management. These are called noncontrasting, or similar, components. They may or may not be mentioned in a particular map unit description. Some minor components, however, have properties and behavior characteristics divergent enough to affect use or to require different management. These are called contrasting, or dissimilar, components. They generally are in small areas and could not be mapped separately because of the scale used. Some small areas of strongly contrasting soils or miscellaneous areas are identified by a special symbol on the maps. If included in the database for a given area, the contrasting minor components are identified in the map unit descriptions along with some characteristics of each. A few areas of minor components may not have been observed, and consequently they are not mentioned in the descriptions, especially where the pattern was so complex that it was impractical to make enough observations to identify all the soils and miscellaneous areas on the landscape.

The presence of minor components in a map unit in no way diminishes the usefulness or accuracy of the data. The objective of mapping is not to delineate pure taxonomic classes but rather to separate the landscape into landforms or landform segments that have similar use and management requirements. The delineation of such segments on the map provides sufficient information for the development of resource plans. If intensive use of small areas is planned, however, onsite investigation is needed to define and locate the soils and miscellaneous areas.

An identifying symbol precedes the map unit name in the map unit descriptions. Each description includes general facts about the unit and gives important soil properties and qualities.

Soils that have profiles that are almost alike make up a *soil series*. All the soils of a series have major horizons that are similar in composition, thickness, and arrangement. Soils of a given series can differ in texture of the surface layer, slope, stoniness, salinity, degree of erosion, and other characteristics that affect their use. On the basis of such differences, a soil series is divided into *soil phases*. Most of the areas shown on the detailed soil maps are phases of soil series. The name of a soil phase commonly indicates a feature that affects use or management. For example, Alpha silt loam, 0 to 2 percent slopes, is a phase of the Alpha series.

Some map units are made up of two or more major soils or miscellaneous areas. These map units are complexes, associations, or undifferentiated groups.

A *complex* consists of two or more soils or miscellaneous areas in such an intricate pattern or in such small areas that they cannot be shown separately on the maps. The pattern and proportion of the soils or miscellaneous areas are somewhat similar in all areas. Alpha-Beta complex, 0 to 6 percent slopes, is an example.

An *association* is made up of two or more geographically associated soils or miscellaneous areas that are shown as one unit on the maps. Because of present or anticipated uses of the map units in the survey area, it was not considered practical or necessary to map the soils or miscellaneous areas separately. The pattern and relative proportion of the soils or miscellaneous areas are somewhat similar. Alpha-Beta association, 0 to 2 percent slopes, is an example.

An *undifferentiated group* is made up of two or more soils or miscellaneous areas that could be mapped individually but are mapped as one unit because similar interpretations can be made for use and management. The pattern and proportion of the soils or miscellaneous areas in a mapped area are not uniform. An area can be made up of only one of the major soils or miscellaneous areas, or it can be made up of all of them. Alpha and Beta soils, 0 to 2 percent slopes, is an example.

Some surveys include *miscellaneous areas*. Such areas have little or no soil material and support little or no vegetation. Rock outcrop is an example.

Additional information about the map units described in this report is available in other soil reports, which give properties of the soils and the limitations, capabilities, and potentials for many uses. Also, the narratives that accompany the soil reports define some of the properties included in the map unit descriptions.

Travis County, Texas

BID—Brackett-Rock outcrop complex, 1 to 12 percent slopes

Map Unit Setting

National map unit symbol: 2yltz
Elevation: 820 to 1,330 feet
Mean annual precipitation: 33 to 37 inches
Mean annual air temperature: 65 to 69 degrees F
Frost-free period: 220 to 260 days

Farmland classification: Not prime farmland

Map Unit Composition

Brackett and similar soils: 68 percent
Rock outcrop: 20 percent
Minor components: 12 percent
Estimates are based on observations, descriptions, and transects of the mapunit.

Description of Brackett

Setting

Landform: Ridges
Landform position (two-dimensional): Shoulder, backslope
Landform position (three-dimensional): Side slope
Down-slope shape: Convex
Across-slope shape: Convex
Parent material: Residuum weathered from limestone

Typical profile

A - 0 to 6 inches: gravelly clay loam
Bw - 6 to 18 inches: clay loam
Cr - 18 to 60 inches: bedrock

Properties and qualities

Slope: 1 to 12 percent
Depth to restrictive feature: 10 to 20 inches to paralithic bedrock
Drainage class: Well drained
Runoff class: High
Capacity of the most limiting layer to transmit water (Ksat): Moderately low to high (0.06 to 1.98 in/hr)
Depth to water table: More than 80 inches
Frequency of flooding: None
Frequency of ponding: None
Calcium carbonate, maximum content: 90 percent
Gypsum, maximum content: 5 percent
Maximum salinity: Nonsaline to very slightly saline (0.0 to 2.0 mmhos/cm)
Available water supply, 0 to 60 inches: Very low (about 2.4 inches)

Interpretive groups

Land capability classification (irrigated): None specified
Land capability classification (nonirrigated): 6e
Hydrologic Soil Group: D
Ecological site: R081CY355TX - Adobe 29-35 PZ
Hydric soil rating: No

Description of Rock Outcrop

Setting

Landform: Ridges
Landform position (two-dimensional): Shoulder
Landform position (three-dimensional): Interfluve
Down-slope shape: Convex

Across-slope shape: Convex
Parent material: Limestone

Typical profile
R - 0 to 48 inches: bedrock

Properties and qualities
Slope: 3 to 12 percent
Depth to restrictive feature: 0 to 2 inches to lithic bedrock
Runoff class: High
Capacity of the most limiting layer to transmit water (Ksat): Moderately low to high (0.06 to 1.98 in/hr)

Interpretive groups
Land capability classification (irrigated): None specified
Land capability classification (nonirrigated): 8
Hydrologic Soil Group: D
Hydric soil rating: No

Minor Components

San saba
Percent of map unit: 4 percent
Landform: Ridges
Landform position (two-dimensional): Footslope, toeslope
Landform position (three-dimensional): Base slope
Down-slope shape: Linear
Across-slope shape: Concave
Ecological site: R081CY356TX - Blackland 29-35 PZ
Hydric soil rating: No

Volente
Percent of map unit: 4 percent
Landform: Ridges
Landform position (two-dimensional): Footslope
Landform position (three-dimensional): Base slope
Down-slope shape: Linear
Across-slope shape: Concave
Ecological site: R081CY357TX - Clay Loam 29-35 PZ
Hydric soil rating: No

Eckrant
Percent of map unit: 4 percent
Landform: Ridges
Landform position (two-dimensional): Shoulder, backslope
Landform position (three-dimensional): Side slope
Down-slope shape: Linear
Across-slope shape: Convex
Ecological site: R081CY363TX - Steep Rocky 29-35 PZ

Hydric soil rating: No

Data Source Information

Soil Survey Area: Travis County, Texas
Survey Area Data: Version 26, Aug 30, 2024

Attachment 3:

Tables

Table 1: Additional Profile Boring Data - 5/1/2025

Lago Vista TLAP Sampling

4616 Rimrock Drive, Lago Vista, Texas 78645

Descriptor		PB-1: Brackett-Rock outcrop-Real Complex	PB-2: Brackett-Rock outcrop-complex
Primary Rooting Depth		The primary rooting depth is 5-6 feet from cedar tree taproots.	
Secondary Rooting Depth		The secondary rooting depth is approximately 9 inches from grass, weeds, shrubs and trees.	
Boundary Descriptions (Soil Horizons)	Horizon	Interval (inches bgs)	
	O - Organic layer (Humus)	0-0.5	0-3.0
	A - Topsoil (Minerals with humus)	0.5 - 2.0	3.0 - 8.0
	E - Eluviation Layer (Leached minerals and metal salts)	absent	absent
	B - (Subsoil)	absent	absent
	C - (Parent Rock)	2.0 - 18.0	8 - 12.5
	R - (Bedrock)	18.0 (Total Depth)	12.5 (Total Depth)
Permeability		0.80 cm/hr	1.3 cm/hr
Available Water Capacity		11.04 cm/m	11.25 cm/m
Curve Number		89	89
Restrictive Horizons		Bedrock	Bedrock
Potential Water Bearing Zones		None	None
Active Water Bearing Zones		None	None

Table 2: Soil Analytical Results - 5/1/2025

Lago Vista TLAP Sampling

4616 Rimrock Drive, Lago Vista, Texas 78645

Analyte Name	Units	DU-1S	DU-1S Dup	DU-1I	DU-1I Dup	DU-2S	DU-2S Dup	DU-2I	DU-2I Dup
General Chemistry									
pH		8.4	8.4	8.5	8.4	8.3	8.2	8.1	8.3
Conductivity	µhmo/cm	171	191	223	176	219	149	193	230
Nitrate-N	ppm	10	10	18	18	7	7	6	7
Phosphorous	ppm	2	1	0	1	1	2	4	2
Potassium	ppm	124	122	71	71	222	286	275	209
Calcium	ppm	30,912	32,621	34,687	34,831	32,452	29,496	20,141	30,537
Magnesium	ppm	179	187	163	163	231	248	239	214
Sulfur	ppm	195	214	218	219	209	197	138	201
Sodium	ppm	16	14	13	13	13	13	13	14
Iron	ppm	2.06	1.73	1.54	1.58	5.53	4.72	8.83	5.11
Zinc	ppm	0.20	0.18	0.11	0.10	0.20	0.18	0.24	0.19
Manganese	ppm	4.31	4.25	3.15	3.15	2.78	2.62	3.22	3.78
Copper	ppm	0.07	0.06	0.05	0.04	0.11	0.15	0.24	0.16
Boron	ppm	0.89	0.84	0.57	0.59	0.91	1.09	1.73	1.13
Textural Analysis (Hydrometer)									
Sand	%	49	41	49	46	33	37	34	33
Silt	%	18	22	16	17	24	21	21	21
Clay	%	33	37	35	37	43	42	45	46
Textural Class	NA	Sandy Clay Loam	Clay Loam	Sandy Clay	Sandy Clay	Clay	Clay	Clay	Clay
TKN	ppm	443	502	337	199	573	616	583	561
Organic Matter	%	4.0	4.9	2.4	2.3	4.7	5.1	3.9	4.3
Total N	ppm	1852	2241	1042	1016	1954	1735	1460	1821
Ammonium N	ppm	8.8	8.3	6.9	7.8	5.4	5.5	3.6	3.7
Detailed Salinity Test (Saturated Paste Extract)									
pH	NA	7.9	7.8	7.8	7.7	7.9	7.3	7.5	7.7
Conductivity	mmhos/cm	0.52	0.50	0.54	0.63	0.46	0.36	0.51	0.50
Sodium	ppm	8	7	7	8	6	6	8	8
Potassium	ppm	5	5	4	4	9	7	10	8
Calcium	ppm	90	88	90	102	76	71	116	114
Magnesium	ppm	1	0	0	1	1	1	4	3
SAR	NA	0.22	0.19	0.19	0.22	0.18	0.19	0.20	0.20
SSP	NA	6.74	5.94	5.78	6.16	5.80	6.42	5.23	5.32

NA - Not Applicable

Attachment 4:

Analytical Laboratory

Report

Soil Analysis Report

Soil, Water and Forage Testing Laboratory
Department of Soil and Crop Sciences
2478 TAMU
College Station, TX 77843-2478
(979)321-5960

Visit our website: http://soiltesting.tamu.edu

Report generated for:
ECS Southwest
Alan Izard - Tanner Miller
1000 N Post Oak Rd
HOUSTON, TX 77055

Sample received on: 5/5/2025
Printed on: 5/30/2025
Area Represented: 60 acres
SWFTL recommends <40 acres/sample

Travis County
Laboratory Number: 686034
Customer Sample ID: DU-1-S
Crop Grown: IMPROVED AND HYBRID BERMUDA GRASS (3 HAY CUTTINGS-2 TONS/A AVG.)

Analysis	Results	CL*	Units	ExLow VLow Low Mod High VHigh Excess.	Nutrient Recommended
pH	**8.4**	(5.8)	-	**Mod. Alkaline**	
Conductivity	**171**	(-)	umho/cm	**None** (CL*)	
Nitrate-N	**10**	(-)	ppm**		**75** lbs N/acre
Phosphorus	**2**	(50)	ppm		**120** lbs P2O5/acre
Potassium	**124**	(150)	ppm		**40** lbs K20/acre
Calcium	**30,912**	(180)	ppm		**0** lbs Ca/acre
Magnesium	**179**	(50)	ppm		**0** lbs Mg/acre
Sulfur	**195**	(13)	ppm		**0** lbs S/acre
Sodium	**16**	(-)	ppm		
Iron	**2.06**	(4.25)	ppm		
Zinc	**0.20**	(0.27)	ppm		**2** lbs Zn/acre
Manganese	**4.31**	(1.00)	ppm		**0** lbs Mn/acre
Copper	**0.07**	(0.16)	ppm		**0.5** lbs Cu/acre
Boron	**0.89**	(1.30)	ppm		**0** lbs B/acre
Limestone Requirement					**0.00** tons 100ECCE/acre

Textural Analysis Test (hydrometer)			Detailed Salinity Test (Saturated Paste Extract)				
Sand	**49**	%	**pH**	**7.9**			
Silt	**18**	%	**Conductivity**	**0.52**	mmhos/cm		
Clay	**33**	%	**Sodium**	**8**	ppm	**0.339**	meq/L
Textural Class:	**Sandy Clay Loam**		**Potassium**	**5**	ppm	**0.128**	meq/L
TKN	**443**	ppm	**Calcium**	**90**	ppm	**4.511**	meq/L
Organic Matter	**4.0**	%	**Magnesium**	**1**	ppm	**0.048**	meq/L
Total N	**1852**	ppm	**SAR**	**0.22**			
Ammonium-N	**8.8**	ppm	**SSP**	**6.74**			

*CL=Critical level is the point which no additional nutrient (excluding nitrate-N, sodium and conductivity) is recommended. **ppm=mg/kg

Nitrogen: Apply an additional 100 lbs/A of nitrogen for each subsequent hay cuttings.

Iron: The soil testing laboratory recommends use of foliar iron sprays.
Zinc: Zinc recommendation is based on single broadcast application each 2-3 years.

Copper: Limited supporting research data is currently available.

Online fertilizer calculators to determine appropriate fertilizers and application rates.
http://soiltesting.tamu.edu

Methods: pH and conductivity/ 2:1; nitrate-N/Cd-red.; P, K, Ca, Mg, Na, S and B/Mehlich 3 by ICP; Fe, Zn, Mn, and Cu/DTPA by ICP.

Soil Analysis Report

Soil, Water and Forage Testing Laboratory
Department of Soil and Crop Sciences
2478 TAMU
College Station, TX 77843-2478
(979)321-5960

Visit our website: http://soiltesting.tamu.edu

Report generated for:
ECS Southwest
Alan Izard - Tanner Miller
1000 N Post Oak Rd
HOUSTON, TX 77055

Sample received on: 5/5/2025
Printed on: 5/30/2025
Area Represented: 60 acres
SWFTL recommends <40 acres/sample

Travis County
Laboratory Number: 686035
Customer Sample ID: DU-1-S Dup
Crop Grown: IMPROVED AND HYBRID BERMUDA GRASS (3 HAY CUTTINGS-2 TONS/A AVG.)

Analysis	Results	CL*	Units	ExLow VLow Low Mod High VHigh Excess.	Nutrient Recommended
pH	8.4	(5.8)	-	Mod. Alkaline	
Conductivity	191	(-)	umho/cm	None	
Nitrate-N	10	(-)	ppm**	CL*	75 lbs N/acre
Phosphorus	1	(50)	ppm		120 lbs P2O5/acre
Potassium	122	(150)	ppm		45 lbs K20/acre
Calcium	32,621	(180)	ppm		0 lbs Ca/acre
Magnesium	187	(50)	ppm		0 lbs Mg/acre
Sulfur	214	(13)	ppm		0 lbs S/acre
Sodium	14	(-)	ppm		
Iron	1.73	(4.25)	ppm		
Zinc	0.18	(0.27)	ppm		3 lbs Zn/acre
Manganese	4.25	(1.00)	ppm		0 lbs Mn/acre
Copper	0.06	(0.16)	ppm		0.5 lbs Cu/acre
Boron	0.84	(1.30)	ppm		0 lbs B/acre
Limestone Requirement					0.00 tons 100ECCE/acre

Textural Analysis Test (hydrometer)			Detailed Salinity Test (Saturated Paste Extract)				
Sand	41	%	pH	7.8			
Silt	22	%	Conductivity	0.50	mmhos/cm		
Clay	37	%	Sodium	7	ppm	0.287	meq/L
Textural Class:	Clay Loam		Potassium	5	ppm	0.122	meq/L
TKN	502	ppm	Calcium	88	ppm	4.401	meq/L
Organic Matter	4.9	%	Magnesium	0	ppm	0.028	meq/L
Total N	2241	ppm	SAR	0.19			
Ammonium-N	8.3	ppm	SSP	5.94			

*CL=Critical level is the point which no additional nutrient (excluding nitrate-N, sodium and conductivity) is recommended. **ppm=mg/kg

Nitrogen: Apply an additional 100 lbs/A of nitrogen for each subsequent hay cuttings.

Iron: The soil testing laboratory recommends use of foliar iron sprays.
Zinc: Zinc recommendation is based on single broadcast application each 2-3 years.

Copper: Limited supporting research data is currently available.

Online fertilizer calculators to determine appropriate fertilizers and application rates.
http://soiltesting.tamu.edu

Methods: pH and conductivity/ 2:1; nitrate-N/Cd-red.; P, K, Ca, Mg, Na, S and B/Mehlich 3 by ICP; Fe, Zn, Mn, and Cu/DTPA by ICP.

Soil Analysis Report

Soil, Water and Forage Testing Laboratory
Department of Soil and Crop Sciences
2478 TAMU
College Station, TX 77843-2478
(979)321-5960

Visit our website: http://soiltesting.tamu.edu

Report generated for:
ECS Southwest
Alan Izard - Tanner Miller
1000 N Post Oak Rd
HOUSTON, TX 77055

Sample received on: 5/5/2025
Printed on: 5/30/2025
Area Represented: 60 acres
SWFTL recommends <40 acres/sample

Travis County
Laboratory Number: 686036
Customer Sample ID: DU-1-I
Crop Grown: IMPROVED AND HYBRID BERMUDA GRASS (3 HAY CUTTINGS-2 TONS/A AVG.)

Analysis	Results	CL*	Units	ExLow VLow Low Mod High VHigh Excess.	Nutrient Recommended
pH	**8.5**	(5.8)	-	**Mod. Alkaline**	
Conductivity	**223**	(-)	umho/cm	**None**	
Nitrate-N	**18**	(-)	ppm**		**60** lbs N/acre
Phosphorus	**0**	(50)	ppm		**120** lbs P2O5/acre
Potassium	**71**	(150)	ppm		**130** lbs K20/acre
Calcium	**34,687**	(180)	ppm		**0** lbs Ca/acre
Magnesium	**163**	(50)	ppm		**0** lbs Mg/acre
Sulfur	**218**	(13)	ppm		**0** lbs S/acre
Sodium	**13**	(-)	ppm		
Iron	**1.54**	(4.25)	ppm		
Zinc	**0.11**	(0.27)	ppm		**3** lbs Zn/acre
Manganese	**3.15**	(1.00)	ppm		**0** lbs Mn/acre
Copper	**0.05**	(0.16)	ppm		**0.5** lbs Cu/acre
Boron	**0.57**	(1.30)	ppm		**0.5** lbs B/acre
Limestone Requirement					**0.00** tons 100ECCE/acre

CL*

Textural Analysis Test (hydrometer)			Detailed Salinity Test (Saturated Paste Extract)				
Sand	**49**	%	**pH**	**7.8**			
Silt	**16**	%	**Conductivity**	**0.54**	mmhos/cm		
Clay	**35**	%	**Sodium**	**7**	ppm	**0.283**	meq/L
Textural Class:	**Sandy Clay**		**Potassium**	**4**	ppm	**0.096**	meq/L
TKN	**337**	ppm	**Calcium**	**90**	ppm	**4.486**	meq/L
Organic Matter	**2.4**	%	**Magnesium**	**0**	ppm	**0.035**	meq/L
Total N	**1042**	ppm	**SAR**	**0.19**			
Ammonium-N	**6.9**	ppm	**SSP**	**5.78**			

*CL=Critical level is the point which no additional nutrient (excluding nitrate-N, sodium and conductivity) is recommended. **ppm=mg/kg

Nitrogen: Apply an additional 100 lbs/A of nitrogen for each subsequent hay cuttings.

Potassium: Split apply potassium fertilizer if recommendation is for more than 75 lbs K2O per acre.

Iron: The soil testing laboratory recommends use of foliar iron sprays.
Zinc: Zinc recommendation is based on single broadcast application each 2-3 years.

Copper: Limited supporting research data is currently available.
Boron: Deep rooted perennial crops may not respond due to deeper profile boron.

Online fertilizer calculators to determine appropriate fertilizers and application rates.
http://soiltesting.tamu.edu

Methods: pH and conductivity/ 2:1; nitrate-N/Cd-red.; P, K, Ca, Mg, Na, S and B/Mehlich 3 by ICP; Fe, Zn, Mn, and Cu/DTPA by ICP.

Soil Analysis Report

Soil, Water and Forage Testing Laboratory
Department of Soil and Crop Sciences
2478 TAMU
College Station, TX 77843-2478
(979)321-5960

Visit our website: http://soiltesting.tamu.edu

Report generated for:
ECS Southwest
Alan Izard - Tanner Miller
1000 N Post Oak Rd
HOUSTON, TX 77055

Sample received on: 5/5/2025
Printed on: 5/30/2025
Area Represented: 60 acres
SWFTL recommends <40 acres/sample

Travis County
Laboratory Number: 686037
Customer Sample ID: DU-1-I Dup
Crop Grown: IMPROVED AND HYBRID BERMUDA GRASS (3 HAY CUTTINGS-2 TONS/A AVG.)

Analysis	Results	CL*	Units	ExLow VLow Low Mod High VHigh Excess.	Nutrient Recommended
pH	8.4	(5.8)	-	Mod. Alkaline	
Conductivity	176	(-)	umho/cm	None	
Nitrate-N	18	(-)	ppm**		60 lbs N/acre
Phosphorus	1	(50)	ppm		120 lbs P2O5/acre
Potassium	71	(150)	ppm		130 lbs K20/acre
Calcium	34,831	(180)	ppm		0 lbs Ca/acre
Magnesium	163	(50)	ppm		0 lbs Mg/acre
Sulfur	219	(13)	ppm		0 lbs S/acre
Sodium	13	(-)	ppm		
Iron	1.58	(4.25)	ppm		
Zinc	0.10	(0.27)	ppm		4 lbs Zn/acre
Manganese	3.15	(1.00)	ppm		0 lbs Mn/acre
Copper	0.04	(0.16)	ppm		0.5 lbs Cu/acre
Boron	0.59	(1.30)	ppm		0.5 lbs B/acre
Limestone Requirement					0.00 tons 100ECCE/acre

Textural Analysis Test (hydrometer)			Detailed Salinity Test (Saturated Paste Extract)				
Sand	46	%	pH	7.7			
Silt	17	%	Conductivity	0.63	mmhos/cm		
Clay	37	%	Sodium	8	ppm	0.346	meq/L
Textural Class:	Sandy Clay		Potassium	4	ppm	0.114	meq/L
TKN	199	ppm	Calcium	102	ppm	5.090	meq/L
Organic Matter	2.3	%	Magnesium	1	ppm	0.073	meq/L
Total N	1016	ppm	SAR	0.22			
Ammonium-N	7.8	ppm	SSP	6.16			

*CL=Critical level is the point which no additional nutrient (excluding nitrate-N, sodium and conductivity) is recommended. **ppm=mg/kg

Nitrogen: Apply an additional 100 lbs/A of nitrogen for each subsequent hay cuttings.

Potassium: Split apply potassium fertilizer if recommendation is for more than 75 lbs K2O per acre.

Iron: The soil testing laboratory recommends use of foliar iron sprays.
Zinc: Zinc recommendation is based on single broadcast application each 2-3 years.

Copper: Limited supporting research data is currently available.
Boron: Deep rooted perennial crops may not respond due to deeper profile boron.

Online fertilizer calculators to determine appropriate fertilizers and application rates.
http://soiltesting.tamu.edu

Methods: pH and conductivity/ 2:1; nitrate-N/Cd-red.; P, K, Ca, Mg, Na, S and B/Mehlich 3 by ICP; Fe, Zn, Mn, and Cu/DTPA by ICP.

TEXAS A&M AGRILIFE EXTENSION

Soil Analysis Report

Soil, Water and Forage Testing Laboratory
Department of Soil and Crop Sciences
2478 TAMU
College Station, TX 77843-2478
(979)321-5960

Visit our website: http://soiltesting.tamu.edu

Report generated for:
ECS Southwest
Alan Izard - Tanner Miller
1000 N Post Oak Rd
HOUSTON, TX 77055

Sample received on: 5/5/2025
Printed on: 5/30/2025
Area Represented: 60 acres
SWFTL recommends <40 acres/sample

Travis County
Laboratory Number: 686038
Customer Sample ID: DU-2-S
Crop Grown: IMPROVED AND HYBRID BERMUDA GRASS (3 HAY CUTTINGS-2 TONS/A AVG.)

Analysis	Results	CL*	Units	ExLow VLow Low Mod High VHigh Excess.	Nutrient Recommended
pH	**8.3**	(5.8)	-	**Mod. Alkaline**	
Conductivity	**219**	(-)	umho/cm	**None**	
Nitrate-N	**7**	(-)	ppm**		**85** lbs N/acre
Phosphorus	**1**	(50)	ppm		**120** lbs P2O5/acre
Potassium	**222**	(150)	ppm		**0** lbs K20/acre
Calcium	**32,452**	(180)	ppm		**0** lbs Ca/acre
Magnesium	**231**	(50)	ppm		**0** lbs Mg/acre
Sulfur	**209**	(13)	ppm		**0** lbs S/acre
Sodium	**13**	(-)	ppm		
Iron	**5.53**	(4.25)	ppm		
Zinc	**0.20**	(0.27)	ppm		**2** lbs Zn/acre
Manganese	**2.78**	(1.00)	ppm		**0** lbs Mn/acre
Copper	**0.11**	(0.16)	ppm		**0.5** lbs Cu/acre
Boron	**0.91**	(1.30)	ppm		**0** lbs B/acre
Limestone Requirement					**0.00** tons 100ECCE/acre

Textural Analysis Test (hydrometer)			Detailed Salinity Test (Saturated Paste Extract)				
Sand	**33**	%	**pH**	**7.9**			
Silt	**24**	%	**Conductivity**	**0.46**	mmhos/cm		
Clay	**43**	%	**Sodium**	**6**	ppm	**0.253**	meq/L
Textural Class:	**Clay**		**Potassium**	**9**	ppm	**0.232**	meq/L
TKN	**573**	ppm	**Calcium**	**76**	ppm	**3.792**	meq/L
Organic Matter	**4.7**	%	**Magnesium**	**1**	ppm	**0.090**	meq/L
Total N	**1954**	ppm	**SAR**	**0.18**			
Ammonium-N	**5.4**	ppm	**SSP**	**5.80**			

*CL=Critical level is the point which no additional nutrient (excluding nitrate-N, sodium and conductivity) is recommended. **ppm=mg/kg

Nitrogen: Apply an additional 100 lbs/A of nitrogen for each subsequent hay cuttings.

Zinc: Zinc recommendation is based on single broadcast application each 2-3 years.

Copper: Limited supporting research data is currently available.

Online fertilizer calculators to determine appropriate fertilizers and application rates.
http://soiltesting.tamu.edu

Methods: pH and conductivity/ 2:1; nitrate-N/Cd-red.; P, K, Ca, Mg, Na, S and B/Mehlich 3 by ICP; Fe, Zn, Mn, and Cu/DTPA by ICP.

Soil Analysis Report

Soil, Water and Forage Testing Laboratory
Department of Soil and Crop Sciences
2478 TAMU
College Station, TX 77843-2478
(979)321-5960

Visit our website: http://soiltesting.tamu.edu

Report generated for:
ECS Southwest
Alan Izard - Tanner Miller
1000 N Post Oak Rd
HOUSTON, TX 77055

Sample received on: 5/5/2025
Printed on: 5/30/2025
Area Represented: 60 acres
SWFTL recommends <40 acres/sample

Travis County
Laboratory Number: 686039
Customer Sample ID: DU-2-S Dup
Crop Grown: IMPROVED AND HYBRID BERMUDA GRASS (3 HAY CUTTINGS-2 TONS/A AVG.)

Analysis	Results	CL*	Units	ExLow	VLow	Low	Mod	High	VHigh	Excess.	Nutrient Recommended
pH	8.2	(5.8)	-	Mod. Alkaline							
Conductivity	149	(-)	umho/cm	None				CL*			
Nitrate-N	7	(-)	ppm**								85 lbs N/acre
Phosphorus	2	(50)	ppm								120 lbs P2O5/acre
Potassium	286	(150)	ppm								0 lbs K20/acre
Calcium	29,496	(180)	ppm								0 lbs Ca/acre
Magnesium	248	(50)	ppm								0 lbs Mg/acre
Sulfur	197	(13)	ppm								0 lbs S/acre
Sodium	13	(-)	ppm								
Iron	4.72	(4.25)	ppm								
Zinc	0.18	(0.27)	ppm								3 lbs Zn/acre
Manganese	2.62	(1.00)	ppm								0 lbs Mn/acre
Copper	0.15	(0.16)	ppm								0.5 lbs Cu/acre
Boron	1.09	(1.30)	ppm								0 lbs B/acre
Limestone Requirement											0.00 tons 100ECCE/acre

Textural Analysis Test (hydrometer)			Detailed Salinity Test (Saturated Paste Extract)				
Sand	37	%	pH	7.3			
Silt	21	%	Conductivity	0.36	mmhos/cm		
Clay	42	%	Sodium	6	ppm	0.260	meq/L
Textural Class:	Clay		Potassium	7	ppm	0.184	meq/L
TKN	616	ppm	Calcium	71	ppm	3.558	meq/L
Organic Matter	5.1	%	Magnesium	1	ppm	0.051	meq/L
Total N	1735	ppm	SAR	0.19			
Ammonium-N	5.5	ppm	SSP	6.42			

*CL=Critical level is the point which no additional nutrient (excluding nitrate-N, sodium and conductivity) is recommended. **ppm=mg/kg

Nitrogen: Apply an additional 100 lbs/A of nitrogen for each subsequent hay cuttings.

Zinc: Zinc recommendation is based on single broadcast application each 2-3 years.

Copper: Limited supporting research data is currently available.

Online fertilizer calculators to determine appropriate fertilizers and application rates.
http://soiltesting.tamu.edu

Methods: pH and conductivity/ 2:1; nitrate-N/Cd-red.; P, K, Ca, Mg, Na, S and B/Mehlich 3 by ICP; Fe, Zn, Mn, and Cu/DTPA by ICP.

Soil Analysis Report

Soil, Water and Forage Testing Laboratory
Department of Soil and Crop Sciences
2478 TAMU
College Station, TX 77843-2478
(979)321-5960

Visit our website: http://soiltesting.tamu.edu

Report generated for:
ECS Southwest
Alan Izard - Tanner Miller
1000 N Post Oak Rd
HOUSTON, TX 77055

Sample received on: 5/5/2025
Printed on: 5/30/2025
Area Represented: 60 acres
SWFTL recommends <40 acres/sample

Travis County
Laboratory Number: 686040
Customer Sample ID: DU-2-I
Crop Grown: IMPROVED AND HYBRID BERMUDA GRASS (3 HAY CUTTINGS-2 TONS/A AVG.)

Analysis	Results	CL*	Units	ExLow VLow Low Mod High VHigh Excess.	Nutrient Recommended
pH	**8.1**	(5.8)	-	**Mod. Alkaline**	
Conductivity	**193**	(-)	umho/cm	**None**	
Nitrate-N	**6**	(-)	ppm**		**85** lbs N/acre
Phosphorus	**4**	(50)	ppm		**115** lbs P2O5/acre
Potassium	**275**	(150)	ppm		**0** lbs K20/acre
Calcium	**20,141**	(180)	ppm		**0** lbs Ca/acre
Magnesium	**239**	(50)	ppm		**0** lbs Mg/acre
Sulfur	**138**	(13)	ppm		**0** lbs S/acre
Sodium	**13**	(-)	ppm		
Iron	**8.83**	(4.25)	ppm		
Zinc	**0.24**	(0.27)	ppm		**1** lbs Zn/acre
Manganese	**3.22**	(1.00)	ppm		**0** lbs Mn/acre
Copper	**0.24**	(0.16)	ppm		**0** lbs Cu/acre
Boron	**1.73**	(1.30)	ppm		**0** lbs B/acre
Limestone Requirement					**0.00** tons 100ECCE/acre

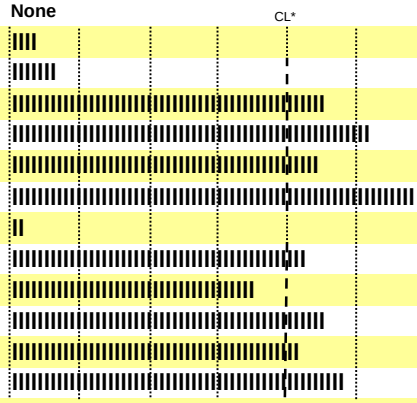

Textural Analysis Test (hydrometer)			Detailed Salinity Test (Saturated Paste Extract)				
Sand	**34**	%	**pH**	**7.5**			
Silt	**21**	%	**Conductivity**	**0.51**	mmhos/cm		
Clay	**45**	%	**Sodium**	**8**	ppm	**0.350**	meq/L
Textural Class:	**Clay**		**Potassium**	**10**	ppm	**0.246**	meq/L
TKN	**583**	ppm	**Calcium**	**116**	ppm	**5.788**	meq/L
Organic Matter	**3.9**	%	**Magnesium**	**4**	ppm	**0.306**	meq/L
Total N	**1460**	ppm	**SAR**	**0.20**			
Ammonium-N	**3.6**	ppm	**SSP**	**5.23**			

*CL=Critical level is the point which no additional nutrient (excluding nitrate-N, sodium and conductivity) is recommended. **ppm=mg/kg

Nitrogen: Apply an additional 100 lbs/A of nitrogen for each subsequent hay cuttings.

Zinc: Zinc recommendation is based on single broadcast application each 2-3 years.

Online fertilizer calculators to determine appropriate fertilizers and application rates.
http://soiltesting.tamu.edu

Methods: pH and conductivity/ 2:1; nitrate-N/Cd-red.; P, K, Ca, Mg, Na, S and B/Mehlich 3 by ICP; Fe, Zn, Mn, and Cu/DTPA by ICP.

Soil Analysis Report

Soil, Water and Forage Testing Laboratory
Department of Soil and Crop Sciences
2478 TAMU
College Station, TX 77843-2478
(979)321-5960

Visit our website: http://soiltesting.tamu.edu

Report generated for:
ECS Southwest
Alan Izard - Tanner Miller
1000 N Post Oak Rd
HOUSTON, TX 77055

Sample received on: 5/5/2025
Printed on: 5/30/2025
Area Represented: 60 acres
SWFTL recommends <40 acres/sample

Travis County
Laboratory Number: 686041
Customer Sample ID: DU-2-I Dup
Crop Grown: IMPROVED AND HYBRID BERMUDA GRASS (3 HAY CUTTINGS-2 TONS/A AVG.)

Analysis	Results	CL*	Units	ExLow VLow Low Mod High VHigh Excess.	Nutrient Recommended
pH	8.3	(5.8)	-	Mod. Alkaline	
Conductivity	230	(-)	umho/cm	None	
Nitrate-N	7	(-)	ppm**		85 lbs N/acre
Phosphorus	2	(50)	ppm		120 lbs P2O5/acre
Potassium	209	(150)	ppm		0 lbs K20/acre
Calcium	30,537	(180)	ppm		0 lbs Ca/acre
Magnesium	214	(50)	ppm		0 lbs Mg/acre
Sulfur	201	(13)	ppm		0 lbs S/acre
Sodium	14	(-)	ppm		
Iron	5.11	(4.25)	ppm		
Zinc	0.19	(0.27)	ppm		2 lbs Zn/acre
Manganese	3.78	(1.00)	ppm		0 lbs Mn/acre
Copper	0.16	(0.16)	ppm		0.5 lbs Cu/acre
Boron	1.13	(1.30)	ppm		0 lbs B/acre
Limestone Requirement					0.00 tons 100ECCE/acre

Textural Analysis Test (hydrometer)			Detailed Salinity Test (Saturated Paste Extract)				
Sand	33	%	pH	7.7			
Silt	21	%	Conductivity	0.50	mmhos/cm		
Clay	46	%	Sodium	8	ppm	0.347	meq/L
Textural Class:	Clay		Potassium	8	ppm	0.207	meq/L
TKN	561	ppm	Calcium	114	ppm	5.689	meq/L
Organic Matter	4.3	%	Magnesium	3	ppm	0.279	meq/L
Total N	1821	ppm	SAR	0.20			
Ammonium-N	3.7	ppm	SSP	5.32			

*CL=Critical level is the point which no additional nutrient (excluding nitrate-N, sodium and conductivity) is recommended. **ppm=mg/kg

Nitrogen: Apply an additional 100 lbs/A of nitrogen for each subsequent hay cuttings.

Zinc: Zinc recommendation is based on single broadcast application each 2-3 years.

Copper: Limited supporting research data is currently available.

Online fertilizer calculators to determine appropriate fertilizers and application rates.
http://soiltesting.tamu.edu

Methods: pH and conductivity/ 2:1; nitrate-N/Cd-red.; P, K, Ca, Mg, Na, S and B/Mehlich 3 by ICP; Fe, Zn, Mn, and Cu/DTPA by ICP.

Attachment 5:

Profile Boring Logs

Soil Boring Log

Borehole ID: PB-1
Page : 1of 1

Project Name: Lago Vista TLAP Sampling	**Project Number: 51-4760**
Location: Lago Vista, Texas	**Geologist: Alan Izard**
Drilling Company/Name: Pacific West/Eric Castillo	**Start Time/Date: 5-1-2025**
Drill Rig: Geoprobe 7822 **Drill Method/Hole Size:** 2.25-inch	**End Time/Date: 5-1-2025**
Sampling Device: 5-foot continuous core barrel (Macro- Core®)	**Water Level (first): Not encountered**
	Water Level (final): Not encountered

Depth (in. bgs)	Core Interval	start/end (inches)	SOIL DESCRIPTION [Soil type, Munsel color (rock and soil), density/consistency, moisture, grading, grain size, angularity, plasticity, minerology, odor, other]	Graphic Log by Soil Horizon
0.5		0	O Horizon - 0-0.5 inches - Organic Soil (Humus), soft/spongy, dry, dark brown (7.5YR, 3/4), loose/matted	O
2.0			A Horizon - 0.5-2.0 inches, Sandy Clay Loam, hard, slightly moist, dark brown (7.5YR, 3/3), weathered limestone gravel 10-15% (angular to subrounded clasts up to 0.5 inch), > 15% fines (silt and clay), low plasticity, 30-35% sand (fine, subanguler to subrounded)	A
18.0		18.0	C Horizon - (Parent soil) - 2.0-18.0 inches, hard, weathered limestone gravel (angulat to subounded clasts up to 0.5 inches), very pale orange (10YR, 8/2), massive, aphanitic, with some microcrystalline texture	C
			R - Horizon - (Bedrock) Limestone, very pale orange (10YR, 8/2), massive, fractured, aphanitic, with some microcrystalline texture. End of Boring (TD, refusal in hard limestone bedrock)	R

Notes: PB-1 is the representative profile boring advanced in the Brackett-Rock outcrop complex (BID).

Denotes gradual or obscure contact

Denotes sharp or distinct contact

Soil Boring Log

Project Name: Lago Vista TLAP Sampling	**Project Number: 51-4760**
Location: Lago Vista, Texas	**Geologist: Alan Izard**
Drilling Company/Name: Pacific West/Eric Castillo	**Start Time/Date: 5-1-2025**
Drill Rig: Geoprobe 7822 **Drill Method/Hole Size:** 2.25-inch	**End Time/Date: 5-1-2025**
Sampling Device: 5-foot continuous core barrel (Macro- Core®)	**Water Level (first): Not encountered**
	Water Level (final): Not encountered

Depth (in. bgs)	Core Interval	start/end (inches)	SOIL DESCRIPTION [Soil type, Munsel color (rock and soil), density/consistency, moisture, grading, grain size, angularity, plasticity, minerology, odor, other]	Graphic Log by Soil Horizon
3.0		0	O Horizon - 0-3.0 inches - Organic Soil (Humus), soft/spongy, dry, dark reddish brown (2.5YR, 3/4)	O
8.0			A Horizon - 3.0-8.0 inches, Clay Loam, dark brown (7.5YR, 3/3), hard, slightly moist, weathered limestone gravel 15-20% (angular to subrounded clasts up to 0.5 inch), > 15% fines (silt and clay), 20-25% sand (fine, subanguler to subrounded) low plasticity	A
12.5		12.5	C Horizon - (Parent soil) - 8.0-12.5 inches, hard, weathered limestone gravel (angular to subounded clasts up to 0.5 inches), grayish orange (10YR, 7/4), massive, aphanitic, with some microcrystalline texture	C
			R - Horizon - (Bedrock) Limestone, very pale orange (10YR, 8/2), massive, fractured, aphanitic, with some microcrystalline texture. End of Boring (TD, refusal in hard limestone bedrock)	R

Note: PB-2 is the representative profile boring advanced in the Brackett-Rock outcrop-Real complex (BoF).

Denotes gradual or obscure contact

Denotes sharp or distinct contact

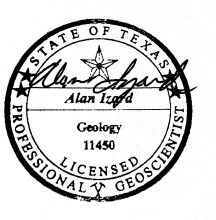

Attachment 6:

Texas 811 Email

Outlook

Locate Message

From texas811locates@texas811.org <texas811locates@texas811.org>
Date Fri 4/25/2025 1:35 PM
To David Smith <dbsmith@pwenviro.com>

EXTERNAL

To update or view a map of the dig location click here to go to the Texas811 Portal Site.

Texas811 Locate Request

Ticket Number:	2561568754	Old Ticket:	
Source:	Portal Ticket	Hours Notice:	48
Type:	Normal	Taken Date:	4/25/2025 1:34:53 PM
Seq Num:	1		

Company Information

Excavator:	PACIFIC WEST LLC	Type:	Excavator
Address:	4760 Kennedale New hope rd	Contact:	David Smith
City, St, Zip:	fort worth, TX 76060	Contact Phone:	(682) 803-4344
Phone:	(682) 803-4344	Caller:	David Smith
Fax:		Caller Phone:	(682) 803-4344
Callback:			
Caller Email:	dbsmith@pwenviro.com		
Contact Email:	dbsmith@pwenviro.com		

Work Information

State:	TX	Work Date:	4/29/2025 1:45:00 PM
County:	TRAVIS	Work Zip Code:	78645
City:	LAGO VISTA		
Work Done For:	ESE 215290	Duration:	2 days
Address:	Surrey ln	Deeper Than 16in:	Yes
Intersection:	Sierra Trl	Explosives:	No
Nature of Work:	Bore-Auger-Soil Sample	White Lined:	No
Map Book:		Excavation Depth:	
Excavation Length:		Directional Boring:	No
Equipment Type:	Drill Rig		

Excavator Supplied GPS

1:30.48047 -97.99428

Driving Directions to Work Site

address is ref. point 21821 Surrey Ln start at the sw corner of this property above gps locate of 30.48047, -97.99428 proceed ne 1250 ft proceed e 1525 ft proceed ne 4460 ft proceed n 1650 ft proceed w 3060 ft proceed sw 475 ft proceed se 1940 ft proceed s 5540 ft proceed e 200 ft back to start point

Work Site Locate Instructions

locate mark area not in the row locate mark area

Additional Information

drill 30 bore to 5 ft in marked area

Interactive Ticket Link

https://portal.texas811.org/#/ticket/2561568754

Excavator Requested Positive Response Method

Members

Code	Name
CCTXC	Spectrum
LAG	City of Lago Vista
P74	Pedernales Electric Cooperative Inc.--sm&p
SUP	Alliant Gas Llc
TXS1	At&t

Please be advised that water, slurry, sewage, service lines and privately owned facilities in the area of the proposed excavation may not be located even after contacting the 811 Center. If your facility is not listed or marked by the utility company you will need to contact the company directly or get private locates by an authorized party.

Work Location Bounding Box

Latitude:	30.479164	Longitude:	-97.996881
Second Latitude:	30.500983	Second Longitude:	-97.978685

In the future you can submit your tickets quick and easy online at the Texas811 Portal Site.

Call 811 to report all damages.

Under Railroad Commission Damage Prevention rules, Texas Administrative Code, Chapter 18, Title 16, Part 1, Rule 18.1, this locate request expires after 14 working days. Call 911 to report any pipeline excavation damage resulting in release of product. Submit electronic Pipeline Damage Report to TX RRC within 30-days.
Please visit https://www.texas811.org/additional-resources for more information about Texas one-call laws.

Attachment T

Monthly Effluent Reports

Texas Commission on Environmental Quality

P.O. Box 13087 • Austin, TX 78711-3087

MONTHLY EFFLUENT REPORT

WQ0011752001		2023	1	7516
PERMIT NUMBER	SET	YEAR	MO	EID

This report to be used for SOIL MON 201 ANN 12-24

Please retain a photocopy for your records.

Parameter Code/ Parameter		Effluent Condition		No. Ex	Frequency of Analysis	Sample Type
		Value	Units			
Example 4006080 pH Maximum	Permitted	*permitted #*	*Std Units*		*1/year*	*24-hour comp*
	Reported	*result*	*units*			
	Permitted	15			daily average	
tss	Reported	*3.5*				
	Permitted	10			1per week	composite
BOD	Reported	*6.25*				
	Permitted	6.0-9.0				Grab
PH	Reported	*7.9*				
	Permitted					Continuous
chlorine	Reported	*4.59*				
	Permitted					
	Reported					
	Permitted	1.0 MGD				Continuous
flow	Reported	*0.44*				
	Permitted					
	Reported					
	Permitted					WW0053954
License	Reported	*B*				
	Permitted					
	Reported					

COMMENTS AND EXPLANATIONS (Reference all attachments here.)

I CERTIFY THAT I AM FAMILIAR WITH THE INFORMATION CONTAINED IN THIS REPORT AND THAT TO THE BEST OF MY KNOWLEDGE AND BELIEF SUCH INFORMAITON IS TRUE AND COMPLETE AND ACCURATE

PLANT OPERATOR NAME	PLANT OPERATOR SIGNATURE	MONTH	DAY	YEAR
Jose A. Munoz		February	14	2023
EXECUTIVE OFFICER NAME	EXECUTIVE OFFICER SIGNATURE	MONTH		
Taylor Whichard		February	14	2023
	Telephone Number	512	267 -1155	
		Area code	Number	

Texas Commission on Environmental Quality

P.O. Box 13087 • Austin, TX 78711-3087

MONTHLY EFFLUENT REPORT

WQ0011752001		2023	2	7516
PERMIT NUMBER	SET	YEAR	MO	EID

This report to be used for SOIL MON 201 ANN 12-24

Please retain a photocopy for your records.

Parameter Code/ Parameter	Effluent Condition	Value	Units	No. Ex	Frequency of Analysis	Sample Type
Example 4006080 pH Maximum	Permitted	*permitted #*	*Std Units*		*1/year*	*24-hour comp*
	Reported	*result*	*units*			
tss	Permitted	15			daily average	
	Reported	2.6				
BOD	Permitted	10			1per week	composite
	Reported	5				
PH	Permitted	6.0-9.0				Grab
	Reported	7.98				
chlorine	Permitted					Continuous
	Reported	2.75				
	Permitted					
	Reported					
flow	Permitted	1.0 MGD				Continuous
	Reported	0.507				
	Permitted					
	Reported					
License	Permitted					WW0053954
	Reported	B				
	Permitted					
	Reported					

COMMENTS AND EXPLANATIONS (Reference all attachments here.)

I CERTIFY THAT I AM FAMILIAR WITH THE INFORMATION CONTAINED IN THIS REPORT AND THAT TO THE BEST OF MY KNOWLEDGE AND BELIEF SUCH INFORMAITON IS TRUE AND COMPLETE AND ACCURATE

PLANT OPERATOR NAME	PLANT OPERATOR SIGNATURE	MONTH	DAY	YEAR
Jose A. Munoz		March	16	2023
EXECUTIVE OFFICER NAME	EXECUTIVE OFFICER SIGNATURE	MONTH		
Taylor Whichard		March	16	2023
	Telephone Number	512	267 -1155	
		Area code	Number	

Texas Commission on Environmental Quality

P.O. Box 13087 • Austin, TX 78711-3087

MONTHLY EFFLUENT REPORT

WQ0011752001		2023	3	7516
PERMIT NUMBER	SET	YEAR	MO	EID

This report to be used for SOIL MON 201 ANN 12-24

Please retain a photocopy for your records.

Parameter Code/ Parameter		Effluent Condition		No. Ex	Frequency of Analysis	Sample Type
		Value	Units			
Example 4006080 pH Maximum	Permitted	*permitted #*	*Std Units*		*1/year*	*24-hour comp*
	Reported	*result*	*units*			
tss	Permitted	15			daily average	
	Reported	*2.5*				
BOD	Permitted	10			1per week	composite
	Reported	*23.5*				
PH	Permitted	6.0-9.0				Grab
	Reported	*7.99*				
chlorine	Permitted					Continuous
	Reported	*3.3*				
	Permitted					
	Reported					
flow	Permitted	1.0 MGD				Continuous
	Reported	*0.538*				
	Permitted					
	Reported					
License	Permitted					WW0053954
	Reported	*B*				
	Permitted					
	Reported					

COMMENTS AND EXPLANATIONS (Reference all attachments here.)

I CERTIFY THAT I AM FAMILIAR WITH THE INFORMATION CONTAINED IN THIS REPORT AND THAT TO THE BEST OF MY KNOWLEDGE AND BELIEF SUCH INFORMAITON IS TRUE AND COMPLETE AND ACCURATE

PLANT OPERATOR NAME	PLANT OPERATOR SIGNATURE	MONTH	DAY	YEAR
Jose A. Munoz		April	17	2023
EXECUTIVE OFFICER NAME	EXECUTIVE OFFICER SIGNATURE	MONTH		
Taylor Whichard		April	17	2023
	Telephone Number	512	267 -1155	
		Area code	Number	

TCEQ-20710

Texas Commission on Environmental Quality

P.O. Box 13087 • Austin, TX 78711-3087

MONTHLY EFFLUENT REPORT

WQ0011752001		2023	4	7516
PERMIT NUMBER	SET	YEAR	MO	EID

This report to be used for SOIL MON 201 ANN 12-24

Please retain a photocopy for your records.

Parameter Code/ Parameter		Effluent Condition		No. Ex	Frequency of Analysis	Sample Type
		Value	Units			
Example 4006080 pH Maximum	Permitted	*permitted #*	*Std Units*		*1/year*	*24-hour comp*
	Reported	*result*	*units*			
tss	Permitted	15			daily average	
	Reported	*2.75*				
BOD	Permitted	10			1per week	composite
	Reported	*34.25*				
PH	Permitted	6.0-9.0				Grab
	Reported	*7.6*				
chlorine	Permitted					Continuous
	Reported	*2.76*				
	Permitted					
	Reported					
flow	Permitted	1.0 MGD				Continuous
	Reported	*0.559*				
	Permitted					
	Reported					
License	Permitted					WW0053954
	Reported	*B*				
	Permitted					
	Reported					

COMMENTS AND EXPLANATIONS (Reference all attachments here.)

I CERTIFY THAT I AM FAMILIAR WITH THE INFORMATION CONTAINED IN THIS REPORT AND THAT TO THE BEST OF MY KNOWLEDGE AND BELIEF SUCH INFORMAITON IS TRUE AND COMPLETE AND ACCURATE

PLANT OPERATOR NAME	PLANT OPERATOR SIGNATURE	MONTH	DAY	YEAR
Jose A. Munoz		May	18	2023
EXECUTIVE OFFICER NAME	EXECUTIVE OFFICER SIGNATURE	MONTH		
Taylor Whichard		May	18	2023
Telephone Number		512	267 -1155	
		Area code	Number	

Texas Commission on Environmental Quality

P.O. Box 13087 • Austin, TX 78711-3087

MONTHLY EFFLUENT REPORT

WQ0011752001		2023	5	7516
PERMIT NUMBER	SET	YEAR	MO	EID

This report to be used for SOIL MON 201 ANN 12-24

Please retain a photocopy for your records.

Parameter Code/ Parameter		Effluent Condition		No. Ex	Frequency of Analysis	Sample Type
		Value	Units			
Example 4006080 pH Maximum	Permitted	*permitted #*	*Std Units*		*1/year*	*24-hour comp*
	Reported	*result*	*units*			
	Permitted	15			daily average	
tss	Reported	*3*				
	Permitted	10			1per week	composite
BOD	Reported	*31.4*				
	Permitted	6.0-9.0				Grab
PH	Reported	*7.56*				
	Permitted					Continuous
chlorine	Reported	*3.26*				
	Permitted					
	Reported					
	Permitted	1.0 MGD				Continuous
flow	Reported	*0.648*				
	Permitted					
	Reported					
	Permitted					WW0053954
License	Reported	*B*				
	Permitted					
	Reported					

COMMENTS AND EXPLANATIONS (Reference all attachments here.)

I CERTIFY THAT I AM FAMILIAR WITH THE INFORMATION CONTAINED IN THIS REPORT AND THAT TO THE BEST OF MY KNOWLEDGE AND BELIEF SUCH INFORMAITON IS TRUE AND COMPLETE AND ACCURATE

PLANT OPERATOR NAME	PLANT OPERATOR SIGNATURE	MONTH	DAY	YEAR
Jose A. Munoz		June	15	2023
EXECUTIVE OFFICER NAME	EXECUTIVE OFFICER SIGNATURE	MONTH		
Taylor Whichard		June	15	2023
	Telephone Number	512	267 -1155	
		Area code	Number	

Texas Commission on Environmental Quality

P.O. Box 13087 • Austin, TX 78711-3087

MONTHLY EFFLUENT REPORT

WQ0011752001		2023	6	7516
PERMIT NUMBER	SET	YEAR	MO	EID

This report to be used for SOIL MON 201 ANN 12-24

Please retain a photocopy for your records.

Parameter Code/ Parameter		Effluent Condition		No. Ex	Frequency of Analysis	Sample Type
		Value	Units			
Example 4006080 pH Maximum	Permitted	*permitted #*	*Std Units*		*1/year*	*24-hour comp*
	Reported	*result*	*units*			
tss	Permitted	15			daily average	
	Reported	*3.75*				
BOD	Permitted	10			1per week	composite
	Reported	*25.5*				
PH	Permitted	6.0-9.0				Grab
	Reported	*7.76*				
chlorine	Permitted					Continuous
	Reported	*4.44*				
	Permitted					
	Reported					
flow	Permitted	1.0 MGD				Continuous
	Reported	*0.675*				
	Permitted					
	Reported					
License	Permitted					WW0053954
	Reported	*B*				
	Permitted					
	Reported					

COMMENTS AND EXPLANATIONS (Reference all attachments here.)

I CERTIFY THAT I AM FAMILIAR WITH THE INFORMATION CONTAINED IN THIS REPORT AND THAT TO THE BEST OF MY KNOWLEDGE AND BELIEF SUCH INFORMAITON IS TRUE AND COMPLETE AND ACCURATE

PLANT OPERATOR NAME	PLANT OPERATOR SIGNATURE	MONTH	DAY	YEAR
Jose A. Munoz		July	18	2023
EXECUTIVE OFFICER NAME	EXECUTIVE OFFICER SIGNATURE	MONTH		
Taylor Whichard	Taylor Whichard	July	18	2023
Telephone Number		512	267 -1155	
		Area code	Number	

Texas Commission on Environmental Quality

P.O. Box 13087 • Austin, TX 78711-3087

MONTHLY EFFLUENT REPORT

WQ0011752001		2023	7	7516
PERMIT NUMBER	SET	YEAR	MO	EID

This report to be used for SOIL MON 201 ANN 12-24

Please retain a photocopy for your records.

Parameter Code/ Parameter	Effluent Condition			No. Ex	Frequency of Analysis	Sample Type
		Value	Units			
Example 4006080 pH Maximum	Permitted	*permitted #*	*Std Units*		*1/year*	*24-hour comp*
	Reported	*result*	*units*			
	Permitted	15			daily average	
tss	Reported	*2*				
	Permitted	10			1per week	composite
BOD	Reported	*1.5*				
	Permitted	6.0-9.0				Grab
PH	Reported	*7.93*				
	Permitted					Continuous
chlorine	Reported	*4.02*				
	Permitted					
	Reported					
	Permitted	1.0 MGD				Continuous
flow	Reported	*0.69*				
	Permitted					
	Reported					
	Permitted					WW0053954
License	Reported	*B*				
	Permitted					
	Reported					

COMMENTS AND EXPLANATIONS (Reference all attachments here.)

I CERTIFY THAT I AM FAMILIAR WITH THE INFORMATION CONTAINED IN THIS REPORT AND THAT TO THE BEST OF MY KNOWLEDGE AND BELIEF SUCH INFORMAITON IS TRUE AND COMPLETE AND ACCURATE

PLANT OPERATOR NAME	PLANT OPERATOR SIGNATURE	MONTH	DAY	YEAR
Jose A. Munoz		August	21	2023
EXECUTIVE OFFICER NAME	EXECUTIVE OFFICER SIGNATURE	MONTH		
Taylor Whichard		August	21	2023
Telephone Number		512	267 -1155	

Texas Commission on Environmental Quality

P.O. Box 13087 • Austin, TX 78711-3087

MONTHLY EFFLUENT REPORT

WQ0011752001				7516
PERMIT NUMBER	SET	2023 YEAR	8 MO	EID

This report to be used for SOIL MON 201 ANN 12-24

Please retain a photocopy for your records.

Parameter Code/ Parameter	Effluent Condition	Value	Units	No. Ex	Frequency of Analysis	Sample Type
Example 4006080 pH Maximum	Permitted	*permitted #*	*Std Units*		*1/year*	*24-hour comp*
	Reported	*result*	*units*			
tss	Permitted	15			daily average	
	Reported	*2*				
BOD	Permitted	10			1per week	composite
	Reported	*4*				
PH	Permitted	6.0-9.0				Grab
	Reported	*7.93*				
chlorine	Permitted					Continuous
	Reported	*3.71*				
	Permitted					
	Reported					
flow	Permitted	1.0 MGD				Continuous
	Reported	*0.62*				
	Permitted					
	Reported					
License	Permitted					WW0053954
	Reported	*B*				
	Permitted					
	Reported					

COMMENTS AND EXPLANATIONS (Reference all attachments here.)

I CERTIFY THAT I AM FAMILIAR WITH THE INFORMATION CONTAINED IN THIS REPORT AND THAT TO THE BEST OF MY KNOWLEDGE AND BELIEF SUCH INFORMAITON IS TRUE AND COMPLETE AND ACCURATE

PLANT OPERATOR NAME	PLANT OPERATOR SIGNATURE	MONTH	DAY	YEAR
Jose A. Munoz		September	18	2023
EXECUTIVE OFFICER NAME	EXECUTIVE OFFICER SIGNATURE	MONTH		
Taylor Whichard		September	18	2023
Telephone Number		512	267 -1155	

Texas Commission on Environmental Quality

P.O. Box 13087 • Austin, TX 78711-3087

MONTHLY EFFLUENT REPORT

WQ0011752001		2023	9	7516
PERMIT NUMBER	SET	YEAR	MO	EID

This report to be used for SOIL MON 201 ANN 12-24

Please retain a photocopy for your records.

Parameter Code/ Parameter		Effluent Condition		No. Ex	Frequency of Analysis	Sample Type
		Value	Units			
Example 4006080 pH Maximum	Permitted	*permitted #*	*Std Units*		*1/year*	*24-hour comp*
	Reported	*result*	*units*			
	Permitted	15			daily average	
tss	Reported	*2.25*				
	Permitted	10			1per week	composite
BOD	Reported	*4*				
	Permitted	6.0-9.0				Grab
PH	Reported	*7.9*				
	Permitted					Continuous
chlorine	Reported	*3.69*				
	Permitted					
	Reported					
	Permitted	1.0 MGD				Continuous
flow	Reported	*0.612*				
	Permitted					
	Reported					
	Permitted					WW0053954
License	Reported	*B*				
	Permitted					
	Reported					

COMMENTS AND EXPLANATIONS (Reference all attachments here.)

I CERTIFY THAT I AM FAMILIAR WITH THE INFORMATION CONTAINED IN THIS REPORT AND THAT TO THE BEST OF MY KNOWLEDGE AND BELIEF SUCH INFORMAITON IS TRUE AND COMPLETE AND ACCURATE

PLANT OPERATOR NAME	PLANT OPERATOR SIGNATURE	MONTH	DAY	YEAR
Jose A. Munoz		October	17	2023
EXECUTIVE OFFICER NAME	EXECUTIVE OFFICER SIGNATURE	MONTH		
Taylor Whichard		October	17	2023
Telephone Number		512	267 -1155	

Texas Commission on Environmental Quality

P.O. Box 13087 • Austin, TX 78711-3087

MONTHLY EFFLUENT REPORT

WQ0011752001		2023	10	7516
PERMIT NUMBER	SET	YEAR	MO	EID

This report to be used for SOIL MON 201 ANN 12-24

Please retain a photocopy for your records.

Parameter Code/ Parameter	Effluent Condition			No. Ex	Frequency of Analysis	Sample Type
		Value	Units			
Example 4006080 pH Maximum	Permitted	*permitted #*	*Std Units*		*1/year*	*24-hour comp*
	Reported	*result*	*units*			
	Permitted	15			daily average	
tss	Reported	*1.2*				
	Permitted	10			1per week	composite
BOD	Reported	*11*				
	Permitted	6.0-9.0				Grab
PH	Reported	*7.85*				
	Permitted					Continuous
chlorine	Reported	*3.03*				
	Permitted					
	Reported					
	Permitted	1.0 MGD				Continuous
flow	Reported	*0.557*				
	Permitted					
	Reported					
	Permitted					WW0053954
License	Reported	*B*				
	Permitted					
	Reported					

COMMENTS AND EXPLANATIONS (Reference all attachments here.)

I CERTIFY THAT I AM FAMILIAR WITH THE INFORMATION CONTAINED IN THIS REPORT AND THAT TO THE BEST OF MY KNOWLEDGE AND BELIEF SUCH INFORMAITON IS TRUE AND COMPLETE AND ACCURATE

PLANT OPERATOR NAME	PLANT OPERATOR SIGNATURE	MONTH	DAY	YEAR
Jose A. Munoz		November	15	2023
EXECUTIVE OFFICER NAME	EXECUTIVE OFFICER SIGNATURE	MONTH		
Taylor Whichard		November	15	2023
	Telephone Number	512	267 -1155	

Texas Commission on Environmental Quality

P.O. Box 13087 • Austin, TX 78711-3087

MONTHLY EFFLUENT REPORT

WQ0011752001		2023	11	7516
PERMIT NUMBER	SET	YEAR	MO	EID

This report to be used for SOIL MON 201 ANN 12-24

Please retain a photocopy for your records.

Parameter Code/ Parameter	Effluent Condition			No. Ex	Frequency of Analysis	Sample Type
		Value	Units			
Example 4006080 pH Maximum	Permitted	*permitted #*	*Std Units*		*1/year*	*24-hour comp*
	Reported	*result*	*units*			
	Permitted	15			daily average	
tss	Reported	*1.5*				
	Permitted	10			1per week	composite
BOD	Reported	*27.5*				
	Permitted	6.0-9.0				Grab
PH	Reported	*7.64*				
	Permitted					Continuous
chlorine	Reported	*2.69*				
	Permitted					
	Reported					
	Permitted	1.0 MGD				Continuous
flow	Reported	*0.523*				
	Permitted					
	Reported					
	Permitted					WW0053954
License	Reported	*B*				
	Permitted					
	Reported					

COMMENTS AND EXPLANATIONS (Reference all attachments here.)

I CERTIFY THAT I AM FAMILIAR WITH THE INFORMATION CONTAINED IN THIS REPORT AND THAT TO THE BEST OF MY KNOWLEDGE AND BELIEF SUCH INFORMAITON IS TRUE AND COMPLETE AND ACCURATE

PLANT OPERATOR NAME	PLANT OPERATOR SIGNATURE	MONTH	DAY	YEAR
Jose A. Munoz		December	18	2023
EXECUTIVE OFFICER NAME	EXECUTIVE OFFICER SIGNATURE	MONTH		
Taylor Whichard		December	18	2023
Telephone Number		512	267 -1155	

Texas Commission on Environmental Quality

P.O. Box 13087 • Austin, TX 78711-3087

MONTHLY EFFLUENT REPORT

WQ0011752001			2023	12	7516
PERMIT NUMBER		SET	YEAR	MO	EID

This report to be used for SOIL MON 201 ANN 12-24

Please retain a photocopy for your records.

Parameter Code/ Parameter		Effluent Condition		No. Ex	Frequency of Analysis	Sample Type
		Value	Units			
Example 4006080 pH Maximum	Permitted	*permitted #*	*Std Units*		*1/year*	*24-hour comp*
	Reported	*result*	*units*			
tss	Permitted	15			daily average	
	Reported	*2.5*				
BOD	Permitted	10			1per week	composite
	Reported	*26.5*				
PH	Permitted	6.0-9.0				Grab
	Reported	*7.72*				
chlorine	Permitted					Continuous
	Reported	*2.48*				
	Permitted					
	Reported					
flow	Permitted	1.0 MGD				Continuous
	Reported	*0.478*				
	Permitted					
	Reported					
License	Permitted					WW0053954
	Reported	*B*				
	Permitted					
	Reported					

COMMENTS AND EXPLANATIONS (Reference all attachments here.)

I CERTIFY THAT I AM FAMILIAR WITH THE INFORMATION CONTAINED IN THIS REPORT AND THAT TO THE BEST OF MY KNOWLEDGE AND BELIEF SUCH INFORMAITON IS TRUE AND COMPLETE AND ACCURATE

PLANT OPERATOR NAME	PLANT OPERATOR SIGNATURE	MONTH	DAY	YEAR
Jose A. Munoz		January	17	2024
EXECUTIVE OFFICER NAME	EXECUTIVE OFFICER SIGNATURE	MONTH		
Taylor Whichard		January	17	2024
Telephone Number		512	267 -1155	

Texas Commission on Environmental Quality

P.O. Box 13087 • Austin, TX 78711-3087

MONTHLY EFFLUENT REPORT

WQ0011752001		2024	1	7516
PERMIT NUMBER	SET	YEAR	MO	EID

This report to be used for SOIL MON 201 ANN 12-24

Please retain a photocopy for your records.

Parameter Code/ Parameter		Effluent Condition		No. Ex	Frequency of Analysis	Sample Type
		Value	Units			
Example 4006080 pH Maximum	Permitted	*permitted #*	*Std Units*		*1/year*	*24-hour comp*
	Reported	*result*	*units*			
tss	Permitted	15			daily average	
	Reported	*5.2*				
BOD	Permitted	10			1per week	composite
	Reported	*24.6*				
PH	Permitted	6.0-9.0				Grab
	Reported	*7.7*				
chlorine	Permitted					Continuous
	Reported	*1.91*				
	Permitted					
	Reported					
flow	Permitted	1.0 MGD				Continuous
	Reported	*0.523*				
	Permitted					
	Reported					
License	Permitted					WW0053954
	Reported	*B*				
	Permitted					
	Reported					

COMMENTS AND EXPLANATIONS (Reference all attachments here.)

I CERTIFY THAT I AM FAMILIAR WITH THE INFORMATION CONTAINED IN THIS REPORT AND THAT TO THE BEST OF MY KNOWLEDGE AND BELIEF SUCH INFORMAITON IS TRUE AND COMPLETE AND ACCURATE

PLANT OPERATOR NAME	PLANT OPERATOR SIGNATURE	MONTH	DAY	YEAR
Jose A. Munoz		February	15	2024
EXECUTIVE OFFICER NAME	EXECUTIVE OFFICER SIGNATURE	MONTH		
Taylor Whichard	2/15/24	February	15	2024
Telephone Number		512	267 -1155	

Texas Commission on Environmental Quality

P.O. Box 13087 • Austin, TX 78711-3087

MONTHLY EFFLUENT REPORT

WQ0011752001		2024	2	7516
PERMIT NUMBER	SET	YEAR	MO	EID

This report to be used for SOIL MON 201 ANN 12-24

Please retain a photocopy for your records.

Parameter Code/ Parameter	Effluent Condition			No. Ex	Frequency of Analysis	Sample Type
		Value	Units			
Example 4006080 pH Maximum	Permitted	*permitted #*	*Std Units*		*1/year*	*24-hour comp*
	Reported	*result*	*units*			
	Permitted	15			daily average	
tss	Reported	*3*				
	Permitted	10			1per week	composite
BOD	Reported	*42.75*				
	Permitted	6.0-9.0				Grab
PH	Reported	*7.64*				
	Permitted					Continuous
chlorine	Reported	*1.85*				
	Permitted					
	Reported					
	Permitted	1.0 MGD				Continuous
flow	Reported	*0.528*				
	Permitted					
	Reported					
	Permitted					WW0053954
License	Reported	*B*				
	Permitted					
	Reported					

COMMENTS AND EXPLANATIONS (Reference all attachments here.) As shown above, effluent BOD remains above permit limit. From the start of this issue many steps have been taken to correct the problem. Currently influent BOD will be monitored regularly, and micro organism test will be run on the aeration basin. Any questions feel free to contact me @(512)297-0828 Jose A. Munoz

I CERTIFY THAT I AM FAMILIAR WITH THE INFORMATION CONTAINED IN THIS REPORT AND THAT TO THE BEST OF MY KNOWLEDGE AND BELIEF SUCH INFORMAITON IS TRUE AND COMPLETE AND ACCURATE

PLANT OPERATOR NAME	PLANT OPERATOR SIGNATURE	MONTH	DAY	YEAR
Jose A. Munoz		March	18	2024
EXECUTIVE OFFICER NAME	EXECUTIVE OFFICER SIGNATURE	MONTH		
Taylor Whichard		March	18	2024
Telephone Number		512	267 -1155	

TCEQ-20710

Texas Commission on Environmental Quality

P.O. Box 13087 • Austin, TX 78711-3087

MONTHLY EFFLUENT REPORT

WQ0011752001		2024	3	7516
PERMIT NUMBER	SET	YEAR	MO	EID

This report to be used for SOIL MON 201 ANN 12-24

Please retain a photocopy for your records.

Parameter Code/ Parameter		Effluent Condition		No. Ex	Frequency of Analysis	Sample Type
		Value	Units			
Example 4006080 pH Maximum	Permitted	*permitted #*	*Std Units*		*1/year*	*24-hour comp*
	Reported	*result*	*units*			
	Permitted	15			daily average	
tss	Reported	*3.5*				
	Permitted	10			1per week	composite
BOD	Reported	*13.5*				
	Permitted	6.0-9.0				Grab
PH	Reported	*7.58*				
	Permitted					Continuous
chlorine	Reported	*2.19*				
	Permitted					
	Reported					
	Permitted	1.0 MGD				Continuous
flow	Reported	*0.543*				
	Permitted					
	Reported					
	Permitted					WW0053954
License	Reported	*B*				
	Permitted					
	Reported					

COMMENTS AND EXPLANATIONS (Reference all attachments here.)

I CERTIFY THAT I AM FAMILIAR WITH THE INFORMATION CONTAINED IN THIS REPORT AND THAT TO THE BEST OF MY KNOWLEDGE AND BELIEF SUCH INFORMAITON IS TRUE AND COMPLETE AND ACCURATE

PLANT OPERATOR NAME	PLANT OPERATOR SIGNATURE	MONTH	DAY	YEAR
Jose A. Munoz		April	18	2024
EXECUTIVE OFFICER NAME	EXECUTIVE OFFICER SIGNATURE	MONTH		
Taylor Whichard		April	18	2024
Telephone Number		512	267 -1155	
		Area code	Number	

Texas Commission on Environmental Quality

P.O. Box 13087 • Austin, TX 78711-3087

MONTHLY EFFLUENT REPORT

WQ0011752001		2024	4	7516
PERMIT NUMBER	SET	YEAR	MO	EID

This report to be used for SOIL MON 201 ANN 12-24

Please retain a photocopy for your records.

Parameter Code/ Parameter	Effluent Condition			No. Ex	Frequency of Analysis	Sample Type
		Value	Units			
Example 4006080 pH Maximum	Permitted	*permitted #*	*Std Units*		*1/year*	*24-hour comp*
	Reported	*result*	*units*			
	Permitted	15			daily average	
tss	Reported	*2.2*				
	Permitted	10			1per week	composite
BOD	Reported	*5.6*				
	Permitted	6.0-9.0				Grab
PH	Reported	*7.55*				
	Permitted					Continuous
chlorine	Reported	*2.33*				
	Permitted					
	Reported					
	Permitted	1.0 MGD				Continuous
flow	Reported	*0.583*				
	Permitted					
	Reported					
	Permitted					WW0053954
License	Reported	*B*				
	Permitted					
	Reported					

COMMENTS AND EXPLANATIONS (Reference all attachments here.)

I CERTIFY THAT I AM FAMILIAR WITH THE INFORMATION CONTAINED IN THIS REPORT AND THAT TO THE BEST OF MY KNOWLEDGE AND BELIEF SUCH INFORMAITON IS TRUE AND COMPLETE AND ACCURATE

PLANT OPERATOR NAME	PLANT OPERATOR SIGNATURE	MONTH	DAY	YEAR
Jose A. Munoz		May	15	2024
EXECUTIVE OFFICER NAME	EXECUTIVE OFFICER SIGNATURE	MONTH		
Taylor Whichard		May	15	2024
	Telephone Number	512	267 -1155	

Texas Commission on Environmental Quality

P.O. Box 13087 • Austin, TX 78711-3087

MONTHLY EFFLUENT REPORT

WQ0011752001		2024	5	7516
PERMITNUMBER	SET	YEAR	MO	EID

This report to be used for SOILMON 201 ANN 12-24

Please retain a photocopy for your records.

Parameter Code/ Parameter		Effluent Condition		No. Ex	Frequency of Analysis	Sample Type
		Value	Units			
Example 4006080 pH Maximum	Permitted	*permitted #*	*Std Units*		*1/year*	*24-hour comp*
	Reported	*result*	*units*			
tss	Permitted	15			daily average	
	Reported	*2.0*				
BOD	Permitted	10			1 per week	composite
	Reported	*11.5*				
PH	Permitted	6.0- 9.0				Grab
	Reported	*7.5*				
chlorine	Permitted					Continuous
	Reported	*1.65*				
	Permitted					
	Reported					
flow	Permitted	1.0 MGD				Continuous
	Reported	*0.649*				
	Permitted					
	Reported					
License	Permitted					WW005 34
	Reported	*B*				
	Permitted					
	Reported					

COMMENTS AND EXPLANATIONS (Reference all attachments here.)

I CERTIFY THAT I AM FAMILIAR WITH THE INFORMATION CONTAINED IN THIS REPORT AND THAT TO THE BEST OF MY KNOWLEDGE AND BELIEF SUCH INFORMAITON IS TRUE AND COMPLETE AND ACCURATE

PLANTOPERATORNAME	PLANTOPERATOR SIGNATURE	MONTH	DAY	YEAR
Jose A. Munoz		June	18	2024
EXECUTIVEOFFICERNAME	EXECUTIVE OFFICERSIGNATURE	MONTH		
Taylor Whichard		June	18	2024
Telephone Number		512	267 -1155	

Texas Commission on Environmental Quality

P.O. Box 13087 • Austin, TX 78711-3087

MONTHLY EFFLUENT REPORT

WQ0011752001		2024	6	7516
PERMIT NUMBER	SET	YEAR	MO	EID

This report to be used for SOIL MON 201 ANN 12-24

Please retain a photocopy for your records.

Parameter Code/ Parameter		Effluent Condition		No. Ex	Frequency of Analysis	Sample Type
		Value	Units			
Example 4006080 pH Maximum	Permitted	*permitted #*	*Std Units*		*1/year*	*24-hour comp*
	Reported	*result*	*units*			
	Permitted	15			daily average	
tss	Reported	*1.25*				
	Permitted	10			1per week	composite
BOD	Reported	*2.75*				
	Permitted	6.0-9.0				Grab
PH	Reported	*7.84*				
	Permitted					Continuous
chlorine	Reported	*2.74*				
	Permitted					
	Reported					
	Permitted	1.0 MGD				Continuous
flow	Reported	*0.648*				
	Permitted					
	Reported					
	Permitted					WW0053954
License	Reported	*B*				
	Permitted					
	Reported					

COMMENTS AND EXPLANATIONS (Reference all attachments here.)

I CERTIFY THAT I AM FAMILIAR WITH THE INFORMATION CONTAINED IN THIS REPORT AND THAT TO THE BEST OF MY KNOWLEDGE AND BELIEF SUCH INFORMAITON IS TRUE AND COMPLETE AND ACCURATE

PLANT OPERATOR NAME	PLANT OPERATOR SIGNATURE	MONTH	DAY	YEAR
Jose A. Munoz		July	15	2024
EXECUTIVE OFFICER NAME	EXECUTIVE OFFICER SIGNATURE	MONTH		
Taylor Whichard		July	15	2024
	Telephone Number	512	267 -1155	

Texas Commission on Environmental Quality

P.O. Box 13087 • Austin, TX 78711-3087

MONTHLY EFFLUENT REPORT

WQ0011752001		2024	7	7516
PERMIT NUMBER	SET	YEAR	MO	EID

This report to be used for SOIL MON 201 ANN 12-24

Please retain a photocopy for your records.

Parameter Code/ Parameter		Effluent Condition		No. Ex	Frequency of Analysis	Sample Type
		Value	Units			
Example 4006080 pH Maximum	Permitted	*permitted #*	*Std Units*		*1/year*	*24-hour comp*
	Reported	*result*	*units*			
	Permitted	15			daily average	
tss	Reported	*1.4*				
	Permitted	10			1per week	composite
BOD	Reported	*2.2*				
	Permitted	6.0-9.0				Grab
PH	Reported	*7.7*				
	Permitted					Continuous
chlorine	Reported	*3.3*				
	Permitted					
	Reported					
	Permitted	1.0 MGD				Continuous
flow	Reported	*0.631*				
	Permitted					
	Reported					
	Permitted					WW0053954
License	Reported	*B*				
	Permitted					
	Reported					

COMMENTS AND EXPLANATIONS (Reference all attachments here.)

I CERTIFY THAT I AM FAMILIAR WITH THE INFORMATION CONTAINED IN THIS REPORT AND THAT TO THE BEST OF MY KNOWLEDGE AND BELIEF SUCH INFORMAITON IS TRUE AND COMPLETE AND ACCURATE

PLANT OPERATOR NAME	PLANT OPERATOR SIGNATURE	MONTH	DAY	YEAR
Jose A. Munoz		August	19	2024
EXECUTIVE OFFICER NAME	EXECUTIVE OFFICER SIGNATURE	MONTH		
Taylor Whichard		August	19	2024
	Telephone Number	512	267 -1155	

Texas Commission on Environmental Quality

P.O. Box 13087 • Austin, TX 78711-3087

MONTHLY EFFLUENT REPORT

WQ0011752001			2024	8	7516
PERMIT NUMBER		SET	YEAR	MO	EID

This report to be used for SOIL MON 201 ANN 12-24

Please retain a photocopy for your records.

Parameter Code/ Parameter	Effluent Condition	Value	Units	No. Ex	Frequency of Analysis	Sample Type
Example 4006080 pH Maximum	Permitted	*permitted #*	*Std Units*		*1/year*	*24-hour comp*
	Reported	*result*	*units*			
	Permitted	15			daily average	
tss	Reported	*<1*				
	Permitted	10			1per week	composite
BOD	Reported	*1.5*				
	Permitted	6.0-9.0				Grab
PH	Reported	*7.8*				
	Permitted					Continuous
chlorine	Reported	*3.48*				
	Permitted					
	Reported					
	Permitted	1.0 MGD				Continuous
flow	Reported	*0.576*				
	Permitted					
	Reported					
	Permitted					WW0053954
License	Reported	*B*				
	Permitted					
	Reported					

COMMENTS AND EXPLANATIONS (Reference all attachments here.)

I CERTIFY THAT I AM FAMILIAR WITH THE INFORMATION CONTAINED IN THIS REPORT AND THAT TO THE BEST OF MY KNOWLEDGE AND BELIEF SUCH INFORMAITON IS TRUE AND COMPLETE AND ACCURATE

PLANT OPERATOR NAME	PLANT OPERATOR SIGNATURE	MONTH	DAY	YEAR
Jose A. Munoz		September	25	2024
EXECUTIVE OFFICER NAME	EXECUTIVE OFFICER SIGNATURE	MONTH		
Taylor Whichard		September	25	2024
Telephone Number		512	267 -1155	

Texas Commission on Environmental Quality

P.O. Box 13087 • Austin, TX 78711-3087

MONTHLY EFFLUENT REPORT

WQ0011752001		2024	9	7516
PERMIT NUMBER	SET	YEAR	MO	EID

This report to be used for SOIL MON 201 ANN 12-24

Please retain a photocopy for your records.

Parameter Code/ Parameter		Effluent Condition		No. Ex	Frequency of Analysis	Sample Type
		Value	Units			
Example 4006080 pH Maximum	Permitted	*permitted #*	*Std Units*		*1/year*	*24-hour comp*
	Reported	*result*	*units*			
tss	Permitted	15			daily average	
	Reported	*4.25*				
BOD	Permitted	10			1per week	composite
	Reported	3.75				
PH	Permitted	6.0-9.0				Grab
	Reported	*7.54*				
chlorine	Permitted					Continuous
	Reported	*2.14*				
	Permitted					
	Reported					
flow	Permitted	1.0 MGD				Continuous
	Reported	*0.554*				
	Permitted					
	Reported					
License	Permitted					WW0053954
	Reported	*B*				
	Permitted					
	Reported					

COMMENTS AND EXPLANATIONS (Reference all attachments here.)

I CERTIFY THAT I AM FAMILIAR WITH THE INFORMATION CONTAINED IN THIS REPORT AND THAT TO THE BEST OF MY KNOWLEDGE AND BELIEF SUCH INFORMAITON IS TRUE AND COMPLETE AND ACCURATE

PLANT OPERATOR NAME	PLANT OPERATOR SIGNATURE	MONTH	DAY	YEAR
Jose A. Munoz		October	15	2024
EXECUTIVE OFFICER NAME	EXECUTIVE OFFICER SIGNATURE	MONTH		
Taylor Whichard	10/15/24	October	15	2024
	Telephone Number	512	267 -1155	

Texas Commission on Environmental Quality

P.O. Box 13087 • Austin, TX 78711-3087

MONTHLY EFFLUENT REPORT

WQ0011752001			2024	10	7516
PERMIT NUMBER		SET	YEAR	MO	EID

This report to be used for SOIL MON 201 ANN 12-24

Please retain a photocopy for your records.

Parameter Code/ Parameter	Effluent Condition			No. Ex	Frequency of Analysis	Sample Type
		Value	Units			
Example 4006080 pH Maximum	Permitted	*permitted #*	*Std Units*		*1/year*	*24-hour comp*
	Reported	*result*	*units*			
tss	Permitted	15			daily average	
	Reported	*1.6*				
BOD	Permitted	10			1per week	composite
	Reported	2.4				
PH	Permitted	6.0-9.0				Grab
	Reported	*7.73*				
chlorine	Permitted					Continuous
	Reported	*4.03*				
	Permitted					
	Reported					
flow	Permitted	1.0 MGD				Continuous
	Reported	*0.507*				
	Permitted					
	Reported					
License	Permitted					WW0053954
	Reported	*B*				
	Permitted					
	Reported					

COMMENTS AND EXPLANATIONS (Reference all attachments here.)

I CERTIFY THAT I AM FAMILIAR WITH THE INFORMATION CONTAINED IN THIS REPORT AND THAT TO THE BEST OF MY KNOWLEDGE AND BELIEF SUCH INFORMAITON IS TRUE AND COMPLETE AND ACCURATE

PLANT OPERATOR NAME	PLANT OPERATOR SIGNATURE	MONTH	DAY	YEAR
Jose A. Munoz		November	18	2024
EXECUTIVE OFFICER NAME	EXECUTIVE OFFICER SIGNATURE	MONTH		
Taylor Whichard		November	18	2024
Telephone Number		512	267 -1155	

Texas Commission on Environmental Quality

P.O. Box 13087 • Austin, TX 78711-3087

MONTHLY EFFLUENT REPORT

WQ0011752001			2024	11	7516
PERMIT NUMBER		SET	YEAR	MO	EID

This report to be used for SOIL MON 201 ANN 12-24

Please retain a photocopy for your records.

Parameter Code/ Parameter	Effluent Condition			No. Ex	Frequency of Analysis	Sample Type
		Value	Units			
Example 4006080 pH Maximum	Permitted	*permitted #*	*Std Units*		*1/year*	*24-hour comp*
	Reported	*result*	*units*			
	Permitted	15			daily average	
tss	Reported	*1*				
	Permitted	10			1per week	composite
BOD	Reported	3.5				
	Permitted	6.0-9.0				Grab
PH	Reported	*7.7*				
	Permitted					Continuous
chlorine	Reported	*3.2*				
	Permitted					
	Reported					
	Permitted	1.0 MGD				Continuous
flow	Reported	*0.568*				
	Permitted					
	Reported					
	Permitted					WW0053954
License	Reported	*B*				
	Permitted					
	Reported					

COMMENTS AND EXPLANATIONS (Reference all attachments here.)

I CERTIFY THAT I AM FAMILIAR WITH THE INFORMATION CONTAINED IN THIS REPORT AND THAT TO THE BEST OF MY KNOWLEDGE AND BELIEF SUCH INFORMAITON IS TRUE AND COMPLETE AND ACCURATE

PLANT OPERATOR NAME	PLANT OPERATOR SIGNATURE	MONTH	DAY	YEAR
Jose A. Munoz		December	16	2024
EXECUTIVE OFFICER NAME	EXECUTIVE OFFICER SIGNATURE	MONTH		
Taylor Whichard		December	16	2024
Telephone Number		512	267 -1155	

Texas Commission on Environmental Quality

P.O. Box 13087 • Austin, TX 78711-3087

MONTHLY EFFLUENT REPORT

WQ0011752001		2024	12	7516
PERMIT NUMBER	SET	YEAR	MO	EID

This report to be used for SOIL MON 201 ANN 12-24

Please retain a photocopy for your records.

Parameter Code/ Parameter	Effluent Condition	Value	Units	No. Ex	Frequency of Analysis	Sample Type
Example 4006080 pH Maximum	Permitted	*permitted #*	*Std Units*		*1/year*	*24-hour comp*
	Reported	*result*	*units*			
tss	Permitted	15			daily average	
	Reported	*0.2*				
BOD	Permitted	10			1per week	composite
	Reported	5.6				
PH	Permitted	6.0-9.0				Grab
	Reported	*7.59*				
chlorine	Permitted					Continuous
	Reported	*2.39*				
	Permitted					
	Reported					
flow	Permitted	1.0 MGD				Continuous
	Reported	*0.554*				
	Permitted					
	Reported					
License	Permitted					WW0053954
	Reported	*B*				
	Permitted					
	Reported					

COMMENTS AND EXPLANATIONS (Reference all attachments here.)

I CERTIFY THAT I AM FAMILIAR WITH THE INFORMATION CONTAINED IN THIS REPORT AND THAT TO THE BEST OF MY KNOWLEDGE AND BELIEF SUCH INFORMAITON IS TRUE AND COMPLETE AND ACCURATE

PLANT OPERATOR NAME	PLANT OPERATOR SIGNATURE	MONTH	DAY	YEAR
Jose A. Munoz		January	14	2025
EXECUTIVE OFFICER NAME	EXECUTIVE OFFICER SIGNATURE	MONTH		
Taylor Whichard		January	14	2025
Telephone Number		512	267 -1155	

Texas Commission on Environmental Quality

P.O. Box 13087 • Austin, TX 78711-3087

MONTHLY EFFLUENT REPORT

WQ0011752001		2025	1	7516
PERMIT NUMBER	SET	YEAR	MO	EID

This report to be used for SOIL MON 201 ANN 12-24

Please retain a photocopy for your records.

Parameter Code/ Parameter		Effluent Condition		No. Ex	Frequency of Analysis	Sample Type
		Value	Units			
Example 4006080 pH Maximum	Permitted	*permitted #*	*Std Units*		*1/year*	*24-hour comp*
	Reported	*result*	*units*			
tss	Permitted	15			daily average	
	Reported	*1.25*				
BOD	Permitted	10			1per week	composite
	Reported	5.5				
PH	Permitted	6.0-9.0				Grab
	Reported	*7.46*				
chlorine	Permitted					Continuous
	Reported	*2.85*				
	Permitted					
	Reported					
flow	Permitted	1.0 MGD				Continuous
	Reported	*0.53*				
	Permitted					
	Reported					
License	Permitted					WW0053954
	Reported	*B*				
	Permitted					
	Reported					

COMMENTS AND EXPLANATIONS (Reference all attachments here.)

I CERTIFY THAT I AM FAMILIAR WITH THE INFORMATION CONTAINED IN THIS REPORT AND THAT TO THE BEST OF MY KNOWLEDGE AND BELIEF SUCH INFORMAITON IS TRUE AND COMPLETE AND ACCURATE

PLANT OPERATOR NAME	PLANT OPERATOR SIGNATURE	MONTH	DAY	YEAR
Jose A. Munoz		February	18	2025
EXECUTIVE OFFICER NAME	EXECUTIVE OFFICER SIGNATURE	MONTH		
Taylor Whichard		February	18	2025
	Telephone Number	512	267 -1155	

Texas Commission on Environmental Quality

P.O. Box 13087 • Austin, TX 78711-3087

MONTHLY EFFLUENT REPORT

WQ0011752001		2025	2	7516
PERMIT NUMBER	SET	YEAR	MO	EID

This report to be used for SOIL MON 201 ANN 12-24

Please retain a photocopy for your records.

Parameter Code/ Parameter		Effluent Condition		No. Ex	Frequency of Analysis	Sample Type
		Value	Units			
Example 4006080 pH Maximum	Permitted	*permitted #*	*Std Units*		*1/year*	*24-hour comp*
	Reported	*result*	*units*			
	Permitted	15			daily average	
tss	Reported	<1				
	Permitted	10			1per week	composite
BOD	Reported	7.75				
	Permitted	6.0-9.0				Grab
PH	Reported	7.61				
	Permitted					Continuous
chlorine	Reported	2.91				
	Permitted					
	Reported					
	Permitted	1.0 MGD				Continuous
flow	Reported	0.548				
	Permitted					
	Reported					
	Permitted					WW0053954
License	Reported	B				
	Permitted					
	Reported					

COMMENTS AND EXPLANATIONS (Reference all attachments here.)

I CERTIFY THAT I AM FAMILIAR WITH THE INFORMATION CONTAINED IN THIS REPORT AND THAT TO THE BEST OF MY KNOWLEDGE AND BELIEF SUCH INFORMAITON IS TRUE AND COMPLETE AND ACCURATE

PLANT OPERATOR NAME	PLANT OPERATOR SIGNATURE	MONTH	DAY	YEAR
Jose A. Munoz		March	19	2025
EXECUTIVE OFFICER NAME	EXECUTIVE OFFICER SIGNATURE	MONTH		
Taylor Whichard		March	19	2025
	Telephone Number	512	267 -1155	

Attachment U

Laboratory Accreditation

Texas Commission on Environmental Quality

Certificate of Accreditation

Accreditation is hereby granted to

Aqua-Tech Laboratories, Inc.

635 Phil Gramm Boulevard
Bryan, TX 77807-9101

State Lab ID: T104704371
Effective Date: 09/01/2024
Expiration Date: 08/31/2025
Certificate ID: TX-C24-00311

Conditions of Accreditation

This laboratory has been found to conform with TCEQ rules and applicable standards for laboratory accreditation. The scope of accreditation is limited to the Fields of Accreditation (FoA) specifically listed on the subsequent page(s) of this certificate. Accreditation is for all version of a method approved per 40 CFR 136, 40 CFR 141, and/ or 40 CFR 143. Continued accreditation requires ongoing compliance with all applicable standards and requirements.

Note: For the attached FoA table, matrices may include DW (drinking water), NPW (non-potable water), S (solid and chemical materials), A (air), and/ or BT (biological tissue).

Issued By: Kelly Keel, Executive Director Texas Commission on Environmental Quality
Date Issued: 09/01/2024

Laboratory Fields of Accreditation

Matrix	Method	Method Code	Analyte	Analyte Code	AB
DW	EPA 200.7	10013806	Aluminum	1000	TX
DW	EPA 200.7	10013806	Arsenic	1010	TX
DW	EPA 200.7	10013806	Barium	1015	TX
DW	EPA 200.7	10013806	Boron	1025	TX
DW	EPA 200.7	10013806	Cadmium	1030	TX
DW	EPA 200.7	10013806	Cobalt	1050	TX
DW	EPA 200.7	10013806	Copper	1055	TX
DW	EPA 200.7	10013806	Iron	1070	TX
DW	EPA 200.7	10013806	Lead	1075	TX
DW	EPA 200.7	10013806	Manganese	1090	TX
DW	EPA 200.7	10013806	Nickel	1105	TX
DW	EPA 200.7	10013806	Potassium	1125	TX
DW	EPA 200.7	10013806	Selenium	1140	TX
DW	EPA 200.7	10013806	Silica as SiO2	1990	TX
DW	EPA 200.7	10013806	Silver	1150	TX
DW	EPA 200.7	10013806	Sodium	1155	TX
DW	EPA 200.7	10013806	Strontium	1160	TX
DW	EPA 200.7	10013806	Tin	1175	TX
DW	EPA 200.7	10013806	Titanium	1180	TX
DW	EPA 200.7	10013806	Total Phosphorus	1910	TX
DW	EPA 200.7	10013806	Vanadium	1185	TX
DW	EPA 200.7	10013806	Zinc	1190	TX
DW	EPA 200.8	10014605	Aluminum	1000	TX
DW	EPA 200.8	10014605	Antimony	1005	TX
DW	EPA 200.8	10014605	Arsenic	1010	TX
DW	EPA 200.8	10014605	Barium	1015	TX
DW	EPA 200.8	10014605	Beryllium	1020	TX
DW	EPA 200.8	10014605	Cadmium	1030	TX
DW	EPA 200.8	10014605	Chromium	1040	TX
DW	EPA 200.8	10014605	Copper	1055	TX
DW	EPA 200.8	10014605	Lead	1075	TX
DW	EPA 200.8	10014605	Manganese	1090	TX
DW	EPA 200.8	10014605	Nickel	1105	TX
DW	EPA 200.8	10014605	Selenium	1140	TX
DW	EPA 200.8	10014605	Silver	1150	TX
DW	EPA 200.8	10014605	Thallium	1165	TX
DW	EPA 200.8	10014605	Zinc	1190	TX

DW	EPA 245.2	10271406	Mercury	1095	TX
DW	SM 2340 C	20047001	Total hardness as CaCO3	1755	TX
DW	SM 2510 B	20048004	Conductivity	1610	TX
DW	SM 2540 C	20049803	Residue-filterable (TDS)	1955	TX
DW	SM 2540 D	20004802	Residue-nonfilterable (TSS)	1960	TX
DW	SM 4500-F^- C	20101808	Fluoride	1730	TX
DW	SM 4500-$NO2^-$ B	20024004	Nitrite as N	1840	TX
DW	SM 4500-$NO3^-$ F	20116001	Nitrate as N	1810	TX
DW	SM 9223 B (Colilert Quanti-Tray)	20211603	Escherichia coli (E. coli)	2525	TX
DW	SM 9223 B (Colilert Quanti-Tray)	20211603	Total coliforms	2500	TX
DW	SM 9223 B (Colilert)	20212413	Total coliforms and E. coli (P/A)	2502	TX
DW	SM 9223 B (Colilert-18)	20214602	Escherichia coli (E. coli)	2525	TX
DW	SM 9223 B (Colilert-18)	20214602	Total coliforms	2500	TX
DW	SM 9223 B (Colilert-18)	20214602	Total coliforms and E. coli (P/A)	2502	TX
NPW	ASTM D516	30002201	Sulfate	2000	TX
NPW	EPA 1664	10127807	Hexane Extractable Material - Silica Gel Treated (HEM-SGT)	6142	TX
NPW	EPA 1664	10127807	n-Hexane Extractable Material (O&G)	1803	TX
NPW	EPA 200.7	10013806	Aluminum	1000	TX
NPW	EPA 200.7	10013806	Antimony	1005	TX
NPW	EPA 200.7	10013806	Arsenic	1010	TX
NPW	EPA 200.7	10013806	Barium	1015	TX
NPW	EPA 200.7	10013806	Beryllium	1020	TX
NPW	EPA 200.7	10013806	Boron	1025	TX
NPW	EPA 200.7	10013806	Cadmium	1030	TX
NPW	EPA 200.7	10013806	Calcium	1035	TX
NPW	EPA 200.7	10013806	Chromium	1040	TX
NPW	EPA 200.7	10013806	Cobalt	1050	TX
NPW	EPA 200.7	10013806	Copper	1055	TX
NPW	EPA 200.7	10013806	Iron	1070	TX
NPW	EPA 200.7	10013806	Lead	1075	TX
NPW	EPA 200.7	10013806	Magnesium	1085	TX
NPW	EPA 200.7	10013806	Manganese	1090	TX
NPW	EPA 200.7	10013806	Molybdenum	1100	TX
NPW	EPA 200.7	10013806	Nickel	1105	TX
NPW	EPA 200.7	10013806	Potassium	1125	TX
NPW	EPA 200.7	10013806	Selenium	1140	TX
NPW	EPA 200.7	10013806	Sodium	1155	TX
NPW	EPA 200.7	10013806	Strontium	1160	TX

NPW	EPA 200.7	10013806	Thallium	1165	TX
NPW	EPA 200.7	10013806	Tin	1175	TX
NPW	EPA 200.7	10013806	Titanium	1180	TX
NPW	EPA 200.7	10013806	Total Phosphorus	1910	TX
NPW	EPA 200.7	10013806	Vanadium	1185	TX
NPW	EPA 200.7	10013806	Zinc	1190	TX
NPW	EPA 200.8	10014605	Aluminum	1000	TX
NPW	EPA 200.8	10014605	Antimony	1005	TX
NPW	EPA 200.8	10014605	Arsenic	1010	TX
NPW	EPA 200.8	10014605	Barium	1015	TX
NPW	EPA 200.8	10014605	Beryllium	1020	TX
NPW	EPA 200.8	10014605	Cadmium	1030	TX
NPW	EPA 200.8	10014605	Chromium	1040	TX
NPW	EPA 200.8	10014605	Cobalt	1050	TX
NPW	EPA 200.8	10014605	Copper	1055	TX
NPW	EPA 200.8	10014605	Iron	1070	TX
NPW	EPA 200.8	10014605	Lead	1075	TX
NPW	EPA 200.8	10014605	Manganese	1090	TX
NPW	EPA 200.8	10014605	Molybdenum	1100	TX
NPW	EPA 200.8	10014605	Nickel	1105	TX
NPW	EPA 200.8	10014605	Selenium	1140	TX
NPW	EPA 200.8	10014605	Thorium	1170	TX
NPW	EPA 200.8	10014605	Vanadium	1185	TX
NPW	EPA 200.8	10014605	Zinc	1190	TX
NPW	EPA 245.2	10271406	Mercury	1095	TX
NPW	EPA 351.2	10065404	Total Kjeldahl Nitrogen - (TKN)	1790	TX
NPW	EPA 353.2	10067400	Nitrate as N	1810	TX
NPW	EPA 353.2	10067400	Nitrate plus Nitrite as N	1820	TX
NPW	EPA 410.4	10077404	Chemical Oxygen Demand (COD)	1565	TX
NPW	EPA 7471	10166004	Mercury	1095	TX
NPW	SM 2120 B	20223807	Color	1605	TX
NPW	SM 2130 B	20042200	Turbidity	2055	TX
NPW	SM 2320 B	20045005	Alkalinity as CaCO3	1505	TX
NPW	SM 2340 B	20046008	Total hardness as CaCO3	1755	TX
NPW	SM 2510 B	20048004	Conductivity	1610	TX
NPW	SM 2540 B	20004608	Residue-total (TS)	1950	TX
NPW	SM 2540 C	20049803	Residue-filterable (TDS)	1955	TX
NPW	SM 2540 D	20004802	Residue-nonfilterable (TSS)	1960	TX
NPW	SM 3500-Cr B	20065809	Chromium (VI)	1045	TX
NPW	SM 4500-Cl F	20080482	Total Residual Chlorine	1940	TX
NPW	SM 4500-Cl^- B	20083801	Chloride	1575	TX

NPW	SM 4500-F⁻ C	20101808	Fluoride	1730	TX
NPW	SM 4500-H+ B	20104603	pH	1900	TX
NPW	SM 4500-NH3 G	20023205	Ammonia as N	1515	TX
NPW	SM 4500-NH3 G	20023205	Total Kjeldahl Nitrogen - (TKN)	1790	TX
NPW	SM 4500-NO2⁻ B	20024004	Nitrite as N	1840	TX
NPW	SM 4500-NO3⁻ F	20116001	Nitrate as N	1810	TX
NPW	SM 4500-NO3⁻ F	20116001	Nitrate plus Nitrite as N	1820	TX
NPW	SM 4500-O G	20025405	Oxygen, dissolved	1880	TX
NPW	SM 4500-P E	20025803	Orthophosphate as P	1870	TX
NPW	SM 4500-P E	20025803	Total Phosphorus	1910	TX
NPW	SM 5210 B	20027401	Biochemical Oxygen Demand (BOD)	1530	TX
NPW	SM 5210 B	20027401	Carbonaceous BOD (CBOD)	1555	TX
NPW	SM 5310 B	20137206	Total Organic Carbon (TOC)	2040	TX
NPW	SM 9222 D	20037405	Fecal coliforms	2530	TX
NPW	SM 9223 B (Colilert Quanti-Tray)	20211205	Escherichia coli (E. coli)	2525	TX
NPW	USGS I-1230-85	40002208	Chromium (VI)	1045	TX
S	EPA 6010	10155609	Aluminum	1000	TX
S	EPA 6010	10155609	Antimony	1005	TX
S	EPA 6010	10155609	Calcium	1035	TX
S	EPA 6010	10155609	Copper	1055	TX
S	EPA 6010	10155609	Iron	1070	TX
S	EPA 6010	10155609	Magnesium	1085	TX
S	EPA 6010	10155609	Potassium	1125	TX
S	EPA 6010	10155609	Sodium	1155	TX
S	EPA 6010	10155609	Strontium	1160	TX
S	EPA 6010	10155609	Total Phosphorus	1910	TX
S	EPA 7471	10166004	Mercury	1095	TX
S	SM 2540 G	20005203	Residue-total (TS)	1950	TX
S	SM 9221 E plus C	20195806	Fecal coliforms	2530	TX
S	SM 9222 D	20037405	Fecal coliforms	2530	TX

Attachment V

Copy of Payment

Attachment W

Current Permit

PERMIT NO. WQ0011752001

TEXAS COMMISSION ON ENVIRONMENTAL QUALITY
P.O. Box 13087
Austin, Texas 78711-3087

This is a renewal of Permit No. WQ0011752001 issued on June 29, 2016.

PERMIT TO DISCHARGE WASTES
under provisions of Chapter 26
of the Texas Water Code

City of Lago Vista

whose mailing address is

5803 Thunderbird Street
Lago Vista, Texas 78645

Nature of Business Producing Waste: Domestic wastewater treatment operation, SIC Code 4952.

General Description and Location of Waste Disposal System:

Description: The City of Lago Vista Wastewater Treatment Facility consists of an activated sludge process plant using the complete mix mode. Treatment units include bar screens, grit chambers, aeration basin, secondary clarifier, aerobic sludge digester, sludge drying beds, belt filter press and chlorine contact chamber.

Interim I Phase: The draft permit authorizes the disposal of treated domestic wastewater effluent at a daily average flow not to exceed 0.60 MGD via surface irrigation of 140 acres of golf course and 40 acres of non-public access land planted with cedar trees. The facility includes two storage ponds with a total surface area of 8.76 acres and total capacity of 103.4 acre-feet for storage of treated effluent prior to irrigation. Application rates to the irrigated land shall not exceed 3.45 acre-feet per year per acre irrigated for golf course irrigation and 4.72 acre-feet per year per acre irrigated for cedar trees irrigation. The irrigated crops include turf grass (golf course) and cedar tree (cedar breaks).

Interim II Phase: The draft permit authorizes the disposal of treated domestic wastewater effluent at a daily average flow not to exceed 0.75 MGD via surface irrigation of 140 acres of golf course and 60 acres of non-public access land planted with cedar trees. The facility will include two storage ponds with a total surface area of 8.76 acres and total capacity of 103.4 acre-feet for storage of treated effluent prior to irrigation. Application rates to the irrigated land shall not exceed 3.45 acre-feet per year per acre irrigated for golf course irrigation and 5.95 acre-feet per year per acre irrigated for cedar trees irrigation. The irrigated crops include turf grass (golf course) and cedar tree (cedar breaks).

Final Phase: The draft permit authorizes the disposal of treated domestic wastewater effluent at a daily average flow not to exceed 1.0 MGD via surface irrigation of 140 acres of golf course and 100 acres of non-public access land planted with cedar trees. The facility will include three storage ponds with a total surface area of 14.7 acres and total capacity of 170.4 acre-feet for storage of treated effluent prior to irrigation. Application rates to the irrigated land shall not exceed 3.45 acre-feet per year per acre irrigated for golf course irrigation and 6.37 acre-feet per year per acre irrigated for cedar trees irrigation. The irrigated crops include turf grass (golf course) and cedar tree (cedar breaks).

Location: The wastewater treatment facility and disposal site are located 21001 Seminole Drive, Lago Vista, in Travis County, Texas 78645. (See Attachment A.)

Drainage Area: The wastewater treatment facility and disposal site are located in the drainage basin of Lake Travis in Segment No. 1404 of the Colorado River Basin. No discharge of pollutants into water in the state is authorized by this permit.

This permit and the authorization contained herein shall expire at midnight on **ten years from the date of issuance**.

ISSUED DATE: **March 11, 2020**

For the Commission

EFFLUENT LIMITATIONS AND MONITORING REQUIREMENTS

Conditions of the Permit: No discharge of pollutants into water in the state is authorized.

A. Effluent Limitations

Character: Treated Domestic Sewage Effluent

Volume: Daily Average Flow – 0.60 MGD from the treatment system in the Interim I Phase
Daily Average Flow – 0.75 MGD from the treatment system in the Interim II Phase
Daily Average Flow – 1.00 MGD from the treatment system in the Final Phase

Quality: The following effluent limitations are required:

	Effluent Concentrations (Not to Exceed)			
Parameter	Daily Average mg/l	7-Day Average mg/l	Daily Maximum mg/	Single Grab mg/l
Biochemical Oxygen Demand (5-day)	10	N/A	N/A	35
Total Suspended Solids	15	N/A	N/A	60

The pH shall not be less than 6.0 standard units nor greater than 9.0 standard units.

The effluent shall be chlorinated in a chlorine contact chamber to a residual of 1.0 mg/l with a minimum detention time of 20 minutes. If the effluent is to be transferred to a holding pond or tank, re-chlorination prior to the effluent being delivered into the irrigation system will be required. A trace chlorine residual shall be maintained in the effluent at the point of irrigation application.

B. Monitoring Requirements:

Parameter	Monitoring Frequency	Sample Type
Flow	Continuous	Totalizing Meter
Biochemical Oxygen Demand (5-day)	One/week (Two/week*)	Grab
Total Suspended Solids	One/week (Two/week*)	Composite
pH	Two/month (Two/week*)	Grab
Chlorine Residual	Continuous	Recording meter

*Final Phase monitoring frequency

The monitoring shall be done after the final treatment unit and prior to storage of the treated effluent. If the effluent is land applied directly from the treatment system, monitoring shall be done after the final treatment unit and prior to land application. These records shall be maintained on a monthly basis and be available at the plant site for inspection by authorized representatives of the Commission for at least three years.

STANDARD PERMIT CONDITIONS

This permit is granted in accordance with the Texas Water Code and the rules and other Orders of the Commission and the laws of the State of Texas.

DEFINITIONS

All definitions in Section 26.001 of the Texas Water Code and 30 TAC Chapter 305 shall apply to this permit and are incorporated by reference. Some specific definitions of words or phrases used in this permit are as follows:

1. Flow Measurements

   a. Daily average flow - the arithmetic average of all determinations of the daily flow within a period of one calendar month. The daily average flow determination shall consist of determinations made on at least four separate days. If instantaneous measurements are used to determine the daily flow, the determination shall be the arithmetic average of all instantaneous measurements taken during that month. Daily average flow determination for intermittent discharges shall consist of a minimum of three flow determinations on days of discharge.

   b. Annual average flow - the arithmetic average of all daily flow determinations taken within the preceding 12 consecutive calendar months. The annual average flow determination shall consist of daily flow volume determinations made by a totalizing meter, charted on a chart recorder and limited to major domestic wastewater discharge facilities with a 1 million gallons per day or greater permitted flow.

   c. Instantaneous flow - the measured flow during the minimum time required to interpret the flow measuring device.

2. Concentration Measurements

   a. Daily average concentration - the arithmetic average of all effluent samples, composite or grab as required by this permit, within a period of one calendar month, consisting of at least four separate representative measurements.

      i. For domestic wastewater treatment plants - When four samples are not available in a calendar month, the arithmetic average (weighted by flow) of all values in the previous four consecutive month period consisting of at least four measurements shall be utilized as the daily average concentration.

      ii. For all other wastewater treatment plants - When four samples are not available in a calendar month, the arithmetic average (weighted by flow) of all values taken during the month shall be utilized as the daily average concentration.

   b. 7-day average concentration - the arithmetic average of all effluent samples, composite or grab as required by this permit, within a period of one calendar week, Sunday through Saturday.

   c. Daily maximum concentration - the maximum concentration measured on a single day, by the sample type specified in the permit, within a period of one calender month.

3. Sample Type

   a. Composite sample - For domestic wastewater, a composite sample is a sample made up of a minimum of three effluent portions collected in a continuous 24-hour period or during the period of daily discharge if less than 24 hours, and combined in volumes proportional to flow, and collected at the intervals required by 30 TAC § 319.9 (a). For industrial wastewater, a composite sample is a sample made up of a minimum of three effluent portions collected in a continuous 24-hour period or during the period of daily discharge if less than 24 hours, and combined in volumes proportional to flow, and collected at the intervals required by 30 TAC § 319.9 (b).

   b. Grab sample - an individual sample collected in less than 15 minutes.

4. Treatment Facility (facility) - wastewater facilities used in the conveyance, storage, treatment, recycling, reclamation and/or disposal of domestic sewage, industrial wastes, agricultural wastes, recreational wastes, or other wastes including sludge handling or disposal facilities under the jurisdiction of the Commission.

5. The term "sewage sludge" is defined as solid, semi-solid, or liquid residue generated during the treatment of domestic sewage in 30 TAC Chapter 312. This includes the solids which have not been classified as hazardous waste separated from wastewater by unit processes.

6. Bypass - the intentional diversion of a waste stream from any portion of a treatment facility.

MONITORING REQUIREMENTS

1. Monitoring Requirements

   Monitoring results shall be collected at the intervals specified in the permit. Unless otherwise specified in this permit or otherwise ordered by the Commission, the permittee shall conduct effluent sampling in accordance with 30 TAC §§ 319.4 - 319.12.

   As provided by state law, the permittee is subject to administrative, civil and criminal penalties, as applicable, for negligently or knowingly violating the Texas Water Code, Chapters 26, 27, and 28, and Texas Health and Safety Code, Chapter 361, including but not limited to knowingly making any false statement, representation, or certification on any report, record or other document submitted or required to be maintained under this permit, including monitoring reports, records or reports of compliance or noncompliance, or falsifying, tampering with or knowingly rendering inaccurate any monitoring device or method required by this permit or violating any other requirement imposed by state or federal regulations.

2. Test Procedures

   a. Unless otherwise specified in this permit, test procedures for the analysis of pollutants shall comply with procedures specified in 30 TAC §§ 319.11 - 319.12. Measurements, tests and calculations shall be accurately accomplished in a representative manner.

   b. All laboratory tests submitted to demonstrate compliance with this permit must meet the requirements of 30 TAC Chapter 25, Environmental Testing Laboratory Accreditation and Certification.

3. Records of Results

   a. Monitoring samples and measurements shall be taken at times and in a manner so as to be representative of the monitored activity.

   b. Except for records of monitoring information required by this permit related to the permittee's sewage sludge use and disposal activities, which shall be retained for a period of at least five years, monitoring and reporting records, including strip charts and records of calibration and maintenance, copies of all records required by this permit, and records of all data used to complete the application for this permit shall be retained at the facility site, or shall be readily available for review by a TCEQ representative for a period of three years from the date of the record or sample, measurement, report, or application. This period shall be extended at the request of the Executive Director.

   c. Records of monitoring activities shall include the following:

      i. date, time and place of sample or measurement;
      ii. identity of individual who collected the sample or made the measurement.
      iii. date and time of analysis;
      iv. identity of the individual and laboratory who performed the analysis;
      v. the technique or method of analysis; and
      vi. the results of the analysis or measurement and quality assurance/quality control records.

      The period during which records are required to be kept shall be automatically extended to the date of the final disposition of any administrative or judicial enforcement action that may be instituted against the permittee.

4. Additional Monitoring by Permittee

   If the permittee monitors any pollutant at the location(s) designated herein more frequently than required by this permit using approved analytical methods as specified above, all results of such monitoring shall be included in determining compliance with permit requirements.

5. Calibration of Instruments

   All automatic flow measuring or recording devices and all totalizing meters for measuring flows shall be accurately calibrated by a trained person at plant start-up and as often thereafter as necessary to ensure accuracy, but not less often than annually unless authorized by the Executive Director for a longer period. Such person shall verify in writing that the device is operating properly and giving accurate results. Copies of the verification shall be retained at the facility site and/or shall be readily available for review by a TCEQ representative for a period of three years.

6. Compliance Schedule Reports

   Reports of compliance or noncompliance with, or any progress reports on, interim and final requirements contained in any compliance schedule of the permit shall be submitted no later than 14 days following each schedule date to the Regional Office and the Compliance Monitoring Team of the Enforcement Division (MC 224).

7. Noncompliance Notification

   a. In accordance with 30 TAC § 305.125(9), any noncompliance which may endanger human health or safety, or the environment shall be reported by the permittee to the TCEQ. Except as allowed by 30 TAC § 305.132, report of such information shall be provided orally or by facsimile transmission (FAX) to the Regional Office within 24 hours of becoming aware of the noncompliance. A written submission of such information shall also be provided by the permittee to the Regional Office and the Compliance Monitoring Team of the Enforcement Division (MC 224) within five working days of becoming aware of the noncompliance. The written submission shall contain a description of the noncompliance and its cause; the potential danger to human health or safety, or the environment; the period of noncompliance, including exact dates and times; if the noncompliance has not been corrected, the time it is expected to continue; and steps taken or planned to reduce, eliminate, and prevent recurrence of the noncompliance, and to mitigate its adverse effects.

   b. The following violations shall be reported under Monitoring and Reporting Requirement 7.a.:

      i. Unauthorized discharges as defined in Permit Condition 2(g).

      ii. Any unanticipated bypass which exceeds any effluent limitation in the permit.

   c. In addition to the above, any effluent violation which deviates from the permitted effluent limitation by more than 40% shall be reported by the permittee in writing to the Regional Office and the Compliance Monitoring Team of the Enforcement Division (MC 224) within 5 working days of becoming aware of the noncompliance.

   d. Any noncompliance other than that specified in this section, or any required information not submitted or submitted incorrectly, shall be reported to the Compliance Monitoring Team of the Enforcement Division (MC 224) as promptly as possible.

8. In accordance with the procedures described in 30 TAC §§ 35.301 - 35.303 (relating to Water Quality Emergency and Temporary Orders) if the permittee knows in advance of the need for a bypass, it shall submit prior notice by applying for such authorization.

9. Changes in Discharges of Toxic Substances

   All existing manufacturing, commercial, mining, and silvicultural permittees shall notify the Regional Office, orally or by facsimile transmission within 24 hours, and both the Regional Office and the Compliance Monitoring Team of the Enforcement Division (MC 224) in writing within five (5) working days, after becoming aware of or having reason to believe:

   a. That any activity has occurred or will occur which would result in the discharge, on a routine or frequent basis, of any toxic pollutant listed at 40 CFR Part 122, Appendix D, Tables II and III (excluding Total Phenols) which is not limited in the permit, if that discharge will exceed the highest of the following "notification levels":

      i. One hundred micrograms per liter (100 µg/L);
      ii. Two hundred micrograms per liter (200 µg/L) for acrolein and acrylonitrile; five hundred micrograms per liter (500 µg/L) for 2,4-dinitrophenol and for 2-methyl-

4,6-dinitrophenol; and one milligram per liter (1 mg/L) for antimony;
iii. Five (5) times the maximum concentration value reported for that pollutant in the permit application; or

iv. The level established by the TCEQ.

b. That any activity has occurred or will occur which would result in any discharge, on a nonroutine or infrequent basis, of a toxic pollutant which is not limited in the permit, if that discharge will exceed the highest of the following "notification levels":

i. Five hundred micrograms per liter (500 µg/L);
ii. One milligram per liter (1 mg/L) for antimony;
iii. Ten (10) times the maximum concentration value reported for that pollutant in the permit application; or
iv. The level established by the TCEQ.

10. Signatories to Reports

All reports and other information requested by the Executive Director shall be signed by the person and in the manner required by 30 TAC § 305.128 (relating to Signatories to Reports).

PERMIT CONDITIONS

1. General

a. When the permittee becomes aware that it failed to submit any relevant facts in a permit application, or submitted incorrect information in an application or in any report to the Executive Director, it shall promptly submit such facts or information.

b. This permit is granted on the basis of the information supplied and representations made by the permittee during action on an application, and relying upon the accuracy and completeness of that information and those representations. After notice and opportunity for a hearing, this permit may be modified, suspended, or revoked, in whole or in part, in accordance with 30 TAC Chapter 305, Subchapter D, during its term for good cause including, but not limited to, the following:

i. Violation of any terms or conditions of this permit;
ii. Obtaining this permit by misrepresentation or failure to disclose fully all relevant facts; or
iii. A change in any condition that requires either a temporary or permanent reduction or elimination of the authorized discharge.

c. The permittee shall furnish to the Executive Director, upon request and within a reasonable time, any information to determine whether cause exists for amending, revoking, suspending or terminating the permit. The permittee shall also furnish to the Executive Director, upon request, copies of records required to be kept by the permit.

2. Compliance

a. Acceptance of the permit by the person to whom it is issued constitutes acknowledgment and agreement that such person will comply with all the terms and conditions embodied in the permit, and the rules and other orders of the Commission.

b. The permittee has a duty to comply with all conditions of the permit. Failure to comply with any permit condition constitutes a violation of the permit and the Texas Water Code or the Texas Health and Safety Code, and is grounds for enforcement action, for permit amendment, revocation or suspension, or for denial of a permit renewal application or an application for a permit for another facility.

c. It shall not be a defense for a permittee in an enforcement action that it would have been necessary to halt or reduce the permitted activity in order to maintain compliance with the conditions of the permit.

d. The permittee shall take all reasonable steps to minimize or prevent any discharge or sludge use or disposal or other permit violation which has a reasonable likelihood of adversely affecting human health or the environment.

e. Authorization from the Commission is required before beginning any change in the permitted facility or activity that may result in noncompliance with any permit requirements.

f. A permit may be amended, suspended and reissued, or revoked for cause in accordance with 30 TAC §§ 305.62 and 305.66 and Texas Water Code Section 7.302. The filing of a request by the permittee for a permit amendment, suspension and reissuance, or termination, or a notification of planned changes or anticipated noncompliance, does not stay any permit condition.

g. There shall be no unauthorized discharge of wastewater or any other waste. For the purpose of this permit, an unauthorized discharge is considered to be any discharge of wastewater into or adjacent to water in the state at any location not permitted as an outfall or otherwise defined in the Special Provisions section of this permit.

h. The permittee is subject to administrative, civil, and criminal penalties, as applicable, under Texas Water Code §§ 7.051 - 7.075 (relating to Administrative Penalties), 7.101 - 7.111 (relating to Civil Penalties), and 7.141 - 7.202 (relating to Criminal Offenses and Penalties).

3. Inspections and Entry

a. Inspection and entry shall be allowed as prescribed in the Texas Water Code Chapters 26, 27, and 28, and Texas Health and Safety Code Chapter 361.

b. The members of the Commission and employees and agents of the Commission are entitled to enter any public or private property at any reasonable time for the purpose of inspecting and investigating conditions relating to the quality of water in the state or the compliance with any rule, regulation, permit or other order of the Commission. Members, employees, or agents of the Commission and Commission contractors are entitled to enter public or private property at any reasonable time to investigate or monitor or, if the responsible party is not responsive or there is an immediate danger to public health or the environment, to remove or remediate a condition related to the

quality of water in the state. Members, employees, Commission contractors, or agents acting under this authority who enter private property shall observe the establishment's rules and regulations concerning safety, internal security, and fire protection, and if the property has management in residence, shall notify management or the person then in charge of his presence and shall exhibit proper credentials. If any member, employee, Commission contractor, or agent is refused the right to enter in or on public or private property under this authority, the Executive Director may invoke the remedies authorized in Texas Water Code Section 7.002. The statement above, that Commission entry shall occur in accordance with an establishment's rules and regulations concerning safety, internal security, and fire protection, is not grounds for denial or restriction of entry to any part of the facility, but merely describes the Commission's duty to observe appropriate rules and regulations during an inspection.

4. Permit Amendment and/or Renewal

   a. The permittee shall give notice to the Executive Director as soon as possible of any planned physical alterations or additions to the permitted facility if such alterations or additions would require a permit amendment or result in a violation of permit requirements. Notice shall also be required under this paragraph when:

      i. The alteration or addition could significantly change the nature or increase the quantity of pollutants discharged. This notification applies to pollutants which are subject neither to effluent limitations in the permit, nor to notification requirements in Monitoring and Reporting Requirements No. 9;

      ii. The alteration or addition results in a significant change in the permittee's sludge use or disposal practices, and such alteration, addition, or change may justify the application of permit conditions that are different from or absent in the existing permit, including notification of additional use or disposal sites not reported during the permit application process or not reported pursuant to an approved land application plan.

   b. Prior to any facility modifications, additions, or expansions that will increase the plant capacity beyond the permitted flow, the permittee must apply for and obtain proper authorization from the Commission before commencing construction.

   c. The permittee must apply for an amendment or renewal at least 180 days prior to expiration of the existing permit in order to continue a permitted activity after the expiration date of the permit. If an application is submitted prior to the expiration date of the permit, the existing permit shall remain in effect until the application is approved, denied, or returned. If the application is returned or denied, authorization to continue such activity shall terminate upon the effective date of the action. If an application is not submitted prior to the expiration date of the permit, the permit shall expire and authorization to continue such activity shall terminate.

   d. Prior to accepting or generating wastes which are not described in the permit application or which would result in a significant change in the quantity or quality of the existing discharge, the permittee must report the proposed changes to the Commission. The permittee must apply for a permit amendment reflecting any necessary changes in permit conditions, including effluent limitations for pollutants not identified and limited by this permit.

e. In accordance with the Texas Water Code § 26.029(b), after a public hearing, notice of which shall be given to the permittee, the Commission may require the permittee, from time to time, for good cause, in accordance with applicable laws, to conform to new or additional conditions.

5. Permit Transfer

a. Prior to any transfer of this permit, Commission approval must be obtained. The Commission shall be notified in writing of any change in control or ownership of facilities authorized by this permit. Such notification should be sent to the Applications Review and Processing Team (MC 148) of the Water Quality Division.

b. A permit may be transferred only according to the provisions of 30 TAC § 305.64 (relating to Transfer of Permits) and 30 TAC § 50.133 (relating to Executive Director Action on Application or WQMP update).

6. Relationship to Hazardous Waste Activities

This permit does not authorize any activity of hazardous waste storage, processing, or disposal which requires a permit or other authorization pursuant to the Texas Health and Safety Code.

7. Property Rights

A permit does not convey any property rights of any sort, or any exclusive privilege.

8. Permit Enforceability

The conditions of this permit are severable, and if any provision of this permit, or the application of any provision of this permit to any circumstances, is held invalid, the application of such provision to other circumstances, and the remainder of this permit, shall not be affected thereby.

9. Relationship to Permit Application

The application pursuant to which the permit has been issued is incorporated herein; provided, however, that in the event of a conflict between the provisions of this permit and the application, the provisions of the permit shall control.

10. Notice of Bankruptcy.

a. Each permittee shall notify the Executive Director, in writing, immediately following the filing of a voluntary or involuntary petition for bankruptcy under any chapter of Title 11 (Bankruptcy) of the United States Code (11 USC) by or against:

i. the permittee;
ii. an entity (as that term is defined in 11 USC, § 101(14)) controlling the permittee or listing the permit or permittee as property of the estate; or
iii. an affiliate (as that term is defined in 11 USC, § 101(2)) of the permittee.

b. This notification must indicate:

i. the name of the permittee;
ii. the permit number(s);
iii. the bankruptcy court in which the petition for bankruptcy was filed; and
iv. the date of filing of the petition.

OPERATIONAL REQUIREMENTS

1. The permittee shall at all times ensure that the facility and all of its systems of collection, treatment, and disposal are properly operated and maintained. This includes, but is not limited to, the regular, periodic examination of wastewater solids within the treatment plant by the operator in order to maintain an appropriate quantity and quality of solids inventory as described in the various operator training manuals and according to accepted industry standards for process control. Process control, maintenance, and operations records shall be retained at the facility site, or shall be readily available for review by a TCEQ representative, for a period of three years.

2. Upon request by the Executive Director, the permittee shall take appropriate samples and provide proper analysis in order to demonstrate compliance with Commission rules. Unless otherwise specified in this permit or otherwise ordered by the Commission, the permittee shall comply with all applicable provisions of 30 TAC Chapter 312 concerning sewage sludge use and disposal and 30 TAC §§ 319.21 - 319.29 concerning the discharge of certain hazardous metals.

3. Domestic wastewater treatment facilities shall comply with the following provisions:

   a. The permittee shall notify the Municipal Permits Team, Wastewater Permitting Section (MC 148) of the Water Quality Division, in writing, of any facility expansion at least 90 days prior to conducting such activity.

   b. The permittee shall submit a closure plan for review and approval to the Municipal Permits Team, Wastewater Permitting Section (MC 148) of the Water Quality Division, for any closure activity at least 90 days prior to conducting such activity. Closure is the act of permanently taking a waste management unit or treatment facility out of service and includes the permanent removal from service of any pit, tank, pond, lagoon, surface impoundment and/or other treatment unit regulated by this permit.

4. The permittee is responsible for installing prior to plant start-up, and subsequently maintaining, adequate safeguards to prevent the discharge of untreated or inadequately treated wastes during electrical power failures by means of alternate power sources, standby generators, and/or retention of inadequately treated wastewater.

5. Unless otherwise specified, the permittee shall provide a readily accessible sampling point and, where applicable, an effluent flow measuring device or other acceptable means by which effluent flow may be determined.

6. The permittee shall remit an annual water quality fee to the Commission as required by 30 TAC Chapter 21. Failure to pay the fee may result in revocation of this permit under Texas Water Code § 7.302(b)(6).

7. Documentation

For all written notifications to the Commission required of the permittee by this permit, the permittee shall keep and make available a copy of each such notification under the same conditions as self-monitoring data are required to be kept and made available. Except for information specified as not confidential in 30 TAC § 1.5(d), any information submitted pursuant to this permit may be claimed as confidential by the submitter. Any such claim must be asserted in the manner prescribed in the application form or by stamping the words "confidential business information" on each page containing such information. If no claim is made at the time of submission, information may be made available to the public without further notice. If the Commission or Executive Director agrees with the designation of confidentiality, the TCEQ will not provide the information for public inspection unless required by the Texas Attorney General or a court pursuant to an open records request. If the Executive Director does not agree with the designation of confidentiality, the person submitting the information will be notified.

8. Facilities which generate domestic wastewater shall comply with the following provisions; domestic wastewater treatment facilities at permitted industrial sites are excluded.

   a. Whenever flow measurements for any domestic sewage treatment facility reach 75 percent of the permitted daily average or annual average flow for three consecutive months, the permittee must initiate engineering and financial planning for expansion and/or upgrading of the domestic wastewater treatment and/or collection facilities. Whenever the flow reaches 90 percent of the permitted daily average or annual average flow for three consecutive months, the permittee shall obtain necessary authorization from the Commission to commence construction of the necessary additional treatment and/or collection facilities. In the case of a domestic wastewater treatment facility which reaches 75 percent of the permitted daily average or annual average flow for three consecutive months, and the planned population to be served or the quantity of waste produced is not expected to exceed the design limitations of the treatment facility, the permittee shall submit an engineering report supporting this claim to the Executive Director of the Commission.

      If in the judgement of the Executive Director the population to be served will not cause permit noncompliance, then the requirement of this section may be waived. To be effective, any waiver must be in writing and signed by the Director of the Enforcement Division (MC 219) of the Commission, and such waiver of these requirements will be reviewed upon expiration of the existing permit; however, any such waiver shall not be interpreted as condoning or excusing any violation of any permit parameter.

   b. The plans and specifications for domestic sewage collection and treatment works associated with any domestic permit must be approved by the Commission and failure to secure approval before commencing construction of such works or making a discharge is a violation of this permit and each day is an additional violation until approval has been secured.

   c. Permits for domestic wastewater treatment plants are granted subject to the policy of the Commission to encourage the development of area-wide waste collection, treatment and disposal systems. The Commission reserves the right to amend any domestic wastewater permit in accordance with applicable procedural requirements to require the system covered by this permit to be integrated into an area-wide system, should such be developed; to require the delivery of the wastes authorized to be collected in, treated by or discharged from said system, to such area-wide system; or to amend this permit in any other particular to effectuate the Commission's policy. Such amendments may be made

when the changes required are advisable for water quality control purposes and are feasible on the basis of waste treatment technology, engineering, financial, and related considerations existing at the time the changes are required, exclusive of the loss of investment in or revenues from any then existing or proposed waste collection, treatment or disposal system.

9. Domestic wastewater treatment plants shall be operated and maintained by sewage plant operators holding a valid certificate of competency at the required level as defined in 30 TAC Chapter 30.

10. Facilities which generate industrial solid waste as defined in 30 TAC § 335.1 shall comply with these provisions:

    a. Any solid waste, as defined in 30 TAC § 335.1 (including but not limited to such wastes as garbage, refuse, sludge from a waste treatment, water supply treatment plant or air pollution control facility, discarded materials, discarded materials to be recycled, whether the waste is solid, liquid, or semisolid), generated by the permittee during the management and treatment of wastewater, must be managed in accordance with all applicable provisions of 30 TAC Chapter 335, relating to Industrial Solid Waste Management.

    b. Industrial wastewater that is being collected, accumulated, stored, or processed before discharge through any final discharge outfall, specified by this permit, is considered to be industrial solid waste until the wastewater passes through the actual point source discharge and must be managed in accordance with all applicable provisions of 30 TAC Chapter 335.

    c. The permittee shall provide written notification, pursuant to the requirements of 30 TAC § 335.8(b)(1), to the Corrective Action Section (MC 221) of the Remediation Division informing the Commission of any closure activity involving an Industrial Solid Waste Management Unit, at least 90 days prior to conducting such an activity.

    d. Construction of any industrial solid waste management unit requires the prior written notification of the proposed activity to the Registration and Reporting Section (MC 129) of the Permitting and Remediation Support Division. No person shall dispose of industrial solid waste, including sludge or other solids from wastewater treatment processes, prior to fulfilling the deed recordation requirements of 30 TAC § 335.5.

    e. The term "industrial solid waste management unit" means a landfill, surface impoundment, waste-pile, industrial furnace, incinerator, cement kiln, injection well, container, drum, salt dome waste containment cavern, or any other structure vessel, appurtenance, or other improvement on land used to manage industrial solid waste.

    f. The permittee shall keep management records for all sludge (or other waste) removed from any wastewater treatment process. These records shall fulfill all applicable requirements of 30 TAC Chapter 335 and must include the following, as it pertains to wastewater treatment and discharge:

        i. Volume of waste and date(s) generated from treatment process;
        ii. Volume of waste disposed of on-site or shipped off-site;
        iii. Date(s) of disposal;
        iv. Identity of hauler or transporter;

v. Location of disposal site; and
vi. Method of final disposal.

The above records shall be maintained on a monthly basis. The records shall be retained at the facility site, or shall be readily available for review by authorized representatives of the TCEQ for at least five years.

11. For industrial facilities to which the requirements of 30 TAC Chapter 335 do not apply, sludge and solid wastes, including tank cleaning and contaminated solids for disposal, shall be disposed of in accordance with Chapter 361 of the Texas Health and Safety Code.

TCEQ Revision 06/2008

SLUDGE PROVISIONS

The permittee is authorized to dispose of sludge only at a Texas Commission on Environmental Quality (TCEQ) authorized land application site, co-disposal landfill, wastewater treatment facility, or facility that further processes sludge. **The disposal of sludge by land application on property owned, leased or under the direct control of the permittee is a violation of the permit unless the site is authorized with the TCEQ. This provision does not authorize Distribution and Marketing of Class A or Class AB Sewage Sludge. This provision does not authorize the permittee to land apply sludge on property owned, leased or under the direct control of the permittee.**

SECTION I. REQUIREMENTS APPLYING TO ALL SEWAGE SLUDGE LAND APPLICATION

A. General Requirements

1. The permittee shall handle and dispose of sewage sludge in accordance with 30 TAC § 312 and all other applicable state and federal regulations in a manner that protects public health and the environment from any reasonably anticipated adverse effects due to any toxic pollutants that may be present in the sludge.

2. In all cases, if the person (permit holder) who prepares the sewage sludge supplies the sewage sludge to another person for land application use or to the owner or lease holder of the land, the permit holder shall provide necessary information to the parties who receive the sludge to assure compliance with these regulations.

3. The permittee shall give 180 days prior notice to the Executive Director in care of the Wastewater Permitting Section (MC 148) of the Water Quality Division of any change planned in the sewage sludge disposal practice.

B. Testing Requirements

1. Sewage sludge shall be tested once during the term of this permit in the Interim I and Interim II phases; annually in the Final phase in accordance with the method specified in both 40 CFR Part 261, Appendix II and 40 CFR Part 268, Appendix I [Toxicity Characteristic Leaching Procedure (TCLP)] or other method that receives the prior approval of the TCEQ for the contaminants listed in 40 CFR Part 261.24, Table 1. Sewage sludge failing this test shall be managed according to RCRA standards for generators of hazardous waste, and the waste's disposition must be in accordance with all applicable requirements for hazardous waste processing, storage, or disposal. Following failure of any TCLP test, the management or disposal of sewage sludge at a facility other than an authorized hazardous waste processing, storage, or disposal facility shall be prohibited until such time as the permittee can demonstrate the sewage sludge no longer exhibits the hazardous waste toxicity characteristics (as demonstrated by the results of the TCLP tests). A written report shall be provided to both the TCEQ Registration and Reporting Section (MC 129) of the Permitting and Registration Support Division and the Regional Director (MC Region 11) within seven (7) days after failing the TCLP Test.

The report shall contain test results, certification that unauthorized waste management has stopped and a summary of alternative disposal plans that comply with RCRA standards for the management of hazardous waste. The report shall be addressed to: Director, Permitting and Registration Support Division (MC 129), Texas Commission on Environmental Quality, P.O. Box 13087, Austin, Texas 78711-3087. In addition, the permittee shall prepare an annual report on the results of all sludge toxicity testing. This annual report shall be submitted to the TCEQ Regional Office (MC Region 11) and the Compliance Monitoring Team (MC 224) of the Enforcement Division by September 30th of each year. Effective September 1, 2020, the permittee must submit this annual report using the online electronic reporting system available through the TCEQ website unless the permittee requests and obtains an electronic reporting waiver.

2. Sewage sludge shall not be applied to the land if the concentration of the pollutants exceeds the pollutant concentration criteria in Table 1. The frequency of testing for pollutants in Table 1 is found in Section I.C. of this permit.

TABLE 1

Pollutant	Ceiling Concentration (Milligrams per kilogram)*
Arsenic	75
Cadmium	85
Chromium	3000
Copper	4300
Lead	840
Mercury	57
Molybdenum	75
Nickel	420
PCBs	49
Selenium	100
Zinc	7500

* Dry weight basis

3. Pathogen Control

All sewage sludge that is applied to agricultural land, forest, a public contact site, or a reclamation site must be treated by one of the following methods to ensure that the sludge meets either the Class A, Class AB or Class B pathogen requirements.

a. For sewage sludge to be classified as Class A with respect to pathogens, the density of fecal coliform in the sewage sludge must be less than 1,000 most probable number (MPN) per gram of total solids (dry weight basis), or the density of Salmonella sp. bacteria in the sewage sludge must be less than three MPN per four grams of total solids (dry weight basis) at the time the sewage sludge is used or disposed. In addition, one of the alternatives listed below must be met:

Alternative 1 - The temperature of the sewage sludge that is used or disposed shall be maintained at or above a specific value for a period of time. See 30 TAC § 312.82(a)(2)(A) for specific information;

Alternative 5 (PFRP) - Sewage sludge that is used or disposed of must be treated in one of the Processes to Further Reduce Pathogens (PFRP) described in 40 CFR Part 503, Appendix B. PFRP include composting, heat drying, heat treatment, and thermophilic aerobic digestion; or

Alternative 6 (PFRP Equivalent) - Sewage sludge that is used or disposed of must be treated in a process that has been approved by the U. S. Environmental Protection Agency as being equivalent to those in Alternative 5.

b. For sewage sludge to be classified as Class AB with respect to pathogens, the density of fecal coliform in the sewage sludge must be less than 1,000 MPN per gram of total solids (dry weight basis), or the density of *Salmonella* sp. bacteria in the sewage sludge be less than three MPN per four grams of total solids (dry weight basis) at the time the sewage sludge is used or disposed. In addition, one of the alternatives listed below must be met:

Alternative 2 - The pH of the sewage sludge that is used or disposed shall be raised to above 12 std. units and shall remain above 12 std. units for 72 hours.

The temperature of the sewage sludge shall be above 52° Celsius for 12 hours or longer during the period that the pH of the sewage sludge is above 12 std. units.

At the end of the 72-hour period during which the pH of the sewage sludge is above 12 std. units, the sewage sludge shall be air dried to achieve a percent solids in the sewage sludge greater than 50%; or

Alternative 3 - The sewage sludge shall be analyzed for enteric viruses prior to pathogen treatment. The limit for enteric viruses is less than one Plaque-forming Unit per four grams of total solids (dry weight basis) either before or following pathogen treatment. See 30 TAC § 312.82(a)(2)(C)(i-iii) for specific information. The sewage sludge shall be analyzed for viable helminth ova prior to pathogen treatment. The limit for viable helminth ova is less than one per four grams of total solids (dry weight basis) either before or following pathogen treatment. See 30 TAC § 312.82(a)(2)(C)(iv-vi) for specific information; or

Alternative 4 - The density of enteric viruses in the sewage sludge shall be less than one Plaque-forming Unit per four grams of total solids (dry weight basis) at the time the sewage sludge is used or disposed. The density of viable helminth ova in the sewage sludge shall be less than one per four grams of total solids (dry weight basis) at the time the sewage sludge is used or disposed.

c. Sewage sludge that meets the requirements of Class AB sewage sludge may be classified a Class A sewage sludge if a variance request is submitted in writing that is supported by substantial documentation demonstrating equivalent methods for reducing odors and written approval is granted by the executive director. The executive director may deny the variance request or revoke that approved variance if it is determined that the variance may potentially endanger human health or the environment, or create nuisance odor conditions.

d. Three alternatives are available to demonstrate compliance with Class B criteria for

sewage sludge.

Alternative 1

i. A minimum of seven random samples of the sewage sludge shall be collected within 48 hours of the time the sewage sludge is used or disposed of during each monitoring episode for the sewage sludge.

ii. The geometric mean of the density of fecal coliform in the samples collected shall be less than either 2,000,000 MPN per gram of total solids (dry weight basis) or 2,000,000 Colony Forming Units per gram of total solids (dry weight basis).

Alternative 2 - Sewage sludge that is used or disposed of shall be treated in one of the Processes to Significantly Reduce Pathogens (PSRP) described in 40 CFR Part 503, Appendix B, so long as all of the following requirements are met by the generator of the sewage sludge.

i. Prior to use or disposal, all the sewage sludge must have been generated from a single location, except as provided in paragraph v. below;

ii. An independent Texas Licensed Professional Engineer must make a certification to the generator of a sewage sludge that the wastewater treatment facility generating the sewage sludge is designed to achieve one of the PSRP at the permitted design loading of the facility. The certification need only be repeated if the design loading of the facility is increased. The certification shall include a statement indicating the design meets all the applicable standards specified in Appendix B of 40 CFR Part 503;

iii. Prior to any off-site transportation or on-site use or disposal of any sewage sludge generated at a wastewater treatment facility, the chief certified operator of the wastewater treatment facility or other responsible official who manages the processes to significantly reduce pathogens at the wastewater treatment facility for the permittee, shall certify that the sewage sludge underwent at least the minimum operational requirements necessary in order to meet one of the PSRP. The acceptable processes and the minimum operational and record keeping requirements shall be in accordance with established U.S. Environmental Protection Agency final guidance;

iv. All certification records and operational records describing how the requirements of this paragraph were met shall be kept by the generator for a minimum of three years and be available for inspection by commission staff for review; and

v. If the sewage sludge is generated from a mixture of sources, resulting from a person who prepares sewage sludge from more than one wastewater treatment facility, the resulting derived product shall meet one of the PSRP, and shall meet the certification, operation, and record keeping requirements of this paragraph.

Alternative 3 - Sewage sludge shall be treated in an equivalent process that has been approved by the U.S. Environmental Protection Agency, so long as all of the following requirements are met by the generator of the sewage sludge.

i. Prior to use or disposal, all the sewage sludge must have been generated from a

single location, except as provided in paragraph v. below;

ii. Prior to any off-site transportation or on-site use or disposal of any sewage sludge generated at a wastewater treatment facility, the chief certified operator of the wastewater treatment facility or other responsible official who manages the processes to significantly reduce pathogens at the wastewater treatment facility for the permittee, shall certify that the sewage sludge underwent at least the minimum operational requirements necessary in order to meet one of the PSRP. The acceptable processes and the minimum operational and record keeping requirements shall be in accordance with established U.S. Environmental Protection Agency final guidance;

iii. All certification records and operational records describing how the requirements of this paragraph were met shall be kept by the generator for a minimum of three years and be available for inspection by commission staff for review;

iv. The Executive Director will accept from the U.S. Environmental Protection Agency a finding of equivalency to the defined PSRP; and

v. If the sewage sludge is generated from a mixture of sources resulting from a person who prepares sewage sludge from more than one wastewater treatment facility, the resulting derived product shall meet one of the Processes to Significantly Reduce Pathogens, and shall meet the certification, operation, and record keeping requirements of this paragraph.

In addition to the Alternatives 1 – 3, the following site restrictions must be met if Class B sludge is land applied:

i. Food crops with harvested parts that touch the sewage sludge/soil mixture and are totally above the land surface shall not be harvested for 14 months after application of sewage sludge.

ii. Food crops with harvested parts below the surface of the land shall not be harvested for 20 months after application of sewage sludge when the sewage sludge remains on the land surface for 4 months or longer prior to incorporation into the soil.

iii. Food crops with harvested parts below the surface of the land shall not be harvested for 38 months after application of sewage sludge when the sewage sludge remains on the land surface for less than 4 months prior to incorporation into the soil.

iv. Food crops, feed crops, and fiber crops shall not be harvested for 30 days after application of sewage sludge.

v. Animals shall not be allowed to graze on the land for 30 days after application of sewage sludge.

vi. Turf grown on land where sewage sludge is applied shall not be harvested for 1 year after application of the sewage sludge when the harvested turf is placed on either land with a high potential for public exposure or a lawn.

vii. Public access to land with a high potential for public exposure shall be restricted for 1 year after application of sewage sludge.

viii. Public access to land with a low potential for public exposure shall be restricted for 30 days after application of sewage sludge.

ix. Land application of sludge shall be in accordance with the buffer zone requirements found in 30 TAC § 312.44.

4. Vector Attraction Reduction Requirements

All bulk sewage sludge that is applied to agricultural land, forest, a public contact site, or a reclamation site shall be treated by one of the following Alternatives 1 through 10 for vector attraction reduction.

Alternative 1 - The mass of volatile solids in the sewage sludge shall be reduced by a minimum of 38%.

Alternative 2 - If Alternative 1 cannot be met for an anaerobically digested sludge, demonstration can be made by digesting a portion of the previously digested sludge anaerobically in the laboratory in a bench-scale unit for 40 additional days at a temperature between 30° and 37° Celsius. Volatile solids must be reduced by less than 17% to demonstrate compliance.

Alternative 3 - If Alternative 1 cannot be met for an aerobically digested sludge, demonstration can be made by digesting a portion of the previously digested sludge with percent solids of two percent or less aerobically in the laboratory in a bench-scale unit for 30 additional days at 20° Celsius. Volatile solids must be reduced by less than 15% to demonstrate compliance.

Alternative 4 - The specific oxygen uptake rate (SOUR) for sewage sludge treated in an aerobic process shall be equal to or less than 1.5 milligrams of oxygen per hour per gram of total solids (dry weight basis) at a temperature of 20° Celsius.

Alternative 5 - Sewage sludge shall be treated in an aerobic process for 14 days or longer. During that time, the temperature of the sewage sludge shall be higher than 40° Celsius and the average temperature of the sewage sludge shall be higher than 45° Celsius.

Alternative 6 - The pH of sewage sludge shall be raised to 12 or higher by alkali addition and, without the addition of more alkali shall remain at 12 or higher for two hours and then remain at a pH of 11.5 or higher for an additional 22 hours at the time the sewage sludge is prepared for sale or given away in a bag or other container.

Alternative 7 - The percent solids of sewage sludge that does not contain unstabilized solids generated in a primary wastewater treatment process shall be equal to or greater than 75% based on the moisture content and total solids prior to mixing with other materials. Unstabilized solids are

defined as organic materials in sewage sludge that have not been treated in either an aerobic or anaerobic treatment process.

Alternative 8 - The percent solids of sewage sludge that contains unstabilized solids generated in a primary wastewater treatment process shall be equal to or greater than 90% based on the moisture content and total solids prior to mixing with other materials at the time the sludge is used. Unstabilized solids are defined as organic materials in sewage sludge that have not been treated in either an aerobic or anaerobic treatment process.

Alternative 9 -

i. Sewage sludge shall be injected below the surface of the land.

ii. No significant amount of the sewage sludge shall be present on the land surface within one hour after the sewage sludge is injected.

iii. When sewage sludge that is injected below the surface of the land is Class A or Class AB with respect to pathogens, the sewage sludge shall be injected below the land surface within eight hours after being discharged from the pathogen treatment process.

Alternative 10-

i. Sewage sludge applied to the land surface or placed on a surface disposal site shall be incorporated into the soil within six hours after application to or placement on the land.

ii. When sewage sludge that is incorporated into the soil is Class A or Class AB with respect to pathogens, the sewage sludge shall be applied to or placed on the land within eight hours after being discharged from the pathogen treatment process.

C. Monitoring Requirements

Toxicity Characteristic Leaching Procedure (TCLP) Test	- once during the term of this permit in the Interim I and Interim II phases; annually in the Final phase
PCBs	- once during the term of this permit in the Interim I and Interim II phases; annually in the Final phase

All metal constituents and fecal coliform or *Salmonella* sp. bacteria shall be monitored at the appropriate frequency shown below, pursuant to 30 TAC § 312.46(a)(1):

Amount of sewage sludge (*) metric tons per 365-day period	Monitoring Frequency
0 to less than 290	Once/Year
290 to less than 1,500	Once/Quarter
1,500 to less than 15,000	Once/Two Months

15,000 or greater	Once/Month

(*) *The amount of bulk sewage sludge applied to the land (dry wt. basis).*

Representative samples of sewage sludge shall be collected and analyzed in accordance with the methods referenced in 30 TAC § 312.7

Identify each of the analytic methods used by the facility to analyze enteric viruses, fecal coliforms, helminth ova, *Salmonella* sp., and other regulated parameters.

Identify in the following categories (as applicable) the sewage sludge treatment process or processes at the facility: preliminary operations (e.g., sludge grinding and degritting), thickening (concentration), stabilization, anaerobic digestion, aerobic digestion, composting, conditioning, disinfection (e.g., beta ray irradiation, gamma ray irradiation, pasteurization), dewatering (e.g., centrifugation, sludge drying beds, sludge lagoons), heat drying, thermal reduction, and methane or biogas capture and recovery.

Identify the nature of material generated by the facility (such as a biosolid for beneficial use or land-farming, or sewage sludge for disposal at a monofill) and whether the material is ultimately conveyed off-site in bulk or in bags.

SECTION II. REQUIREMENTS SPECIFIC TO BULK SEWAGE SLUDGE FOR APPLICATION TO THE LAND MEETING CLASS A, CLASS AB or B PATHOGEN REDUCTION AND THE CUMULATIVE LOADING RATES IN TABLE 2, OR CLASS B PATHOGEN REDUCTION AND THE POLLUTANT CONCENTRATIONS IN TABLE 3

For those permittees meeting Class A, Class AB or B pathogen reduction requirements and that meet the cumulative loading rates in Table 2 below, or the Class B pathogen reduction requirements and contain concentrations of pollutants below listed in Table 3, the following conditions apply:

A. Pollutant Limits

Table 2

Pollutant	Cumulative Pollutant Loading Rate (pounds per acre)*
Arsenic	36
Cadmium	35
Chromium	2677
Copper	1339
Lead	268
Mercury	15
Molybdenum	Report Only
Nickel	375
Selenium	89
Zinc	2500

Table 3

Pollutant	Monthly Average Concentration (milligrams per kilogram)*
Arsenic	41
Cadmium	39
Chromium	1200
Copper	1500
Lead	300
Mercury	17
Molybdenum	Report Only
Nickel	420
Selenium	36
Zinc	2800

*Dry weight basis

B. Pathogen Control

All bulk sewage sludge that is applied to agricultural land, forest, a public contact site, a reclamation site, shall be treated by either Class A, Class AB or Class B pathogen reduction requirements as defined above in Section I.B.3.

C. Management Practices

1. Bulk sewage sludge shall not be applied to agricultural land, forest, a public contact site, or a reclamation site that is flooded, frozen, or snow-covered so that the bulk sewage sludge enters a wetland or other waters in the State.

2. Bulk sewage sludge not meeting Class A requirements shall be land applied in a manner which complies with Applicability in accordance with 30 TAC §312.41 and the Management Requirements in accordance with 30 TAC § 312.44.

3. Bulk sewage sludge shall be applied at or below the agronomic rate of the cover crop.

4. An information sheet shall be provided to the person who receives bulk sewage sludge sold or given away. The information sheet shall contain the following information:

   a. The name and address of the person who prepared the sewage sludge that is sold or given away in a bag or other container for application to the land.

   b. A statement that application of the sewage sludge to the land is prohibited except in accordance with the instruction on the label or information sheet.

   c. The annual whole sludge application rate for the sewage sludge application rate for the sewage sludge that does not cause any of the cumulative pollutant loading rates in Table 2 above to be exceeded, unless the pollutant concentrations in Table 3 found in Section II above are met.

D. Notification Requirements

1. If bulk sewage sludge is applied to land in a State other than Texas, written notice shall be provided prior to the initial land application to the permitting authority for the State in which the bulk sewage sludge is proposed to be applied. The notice shall include:

   a. The location, by street address, and specific latitude and longitude, of each land application site.

   b. The approximate time period bulk sewage sludge will be applied to the site.

   c. The name, address, telephone number, and National Pollutant Discharge Elimination System permit number (if appropriate) for the person who will apply the bulk sewage sludge.

2. The permittee shall give 180 days prior notice to the Executive Director in care of the Wastewater Permitting Section (MC 148) of the Water Quality Division of any change planned in the sewage sludge disposal practice.

E. Record keeping Requirements

The sludge documents will be retained at the facility site and/or shall be readily available for review by a TCEQ representative. The person who prepares bulk sewage sludge or a sewage sludge material shall develop the following information and shall retain the information at

the facility site and/or shall be readily available for review by a TCEQ representative for a period of five years. If the permittee supplies the sludge to another person who land applies the sludge, the permittee shall notify the land applier of the requirements for record keeping found in 30 TAC § 312.47 for persons who land apply.

1. The concentration (mg/kg) in the sludge of each pollutant listed in Table 3 above and the applicable pollutant concentration criteria (mg/kg), or the applicable cumulative pollutant loading rate and the applicable cumulative pollutant loading rate limit (lbs/ac) listed in Table 2 above.

2. A description of how the pathogen reduction requirements are met (including site restrictions for Class AB and Class B sludge, if applicable).

3. A description of how the vector attraction reduction requirements are met.

4. A description of how the management practices listed above in Section II.C are being met.

5. The following certification statement:

   "I certify, under penalty of law, that the applicable pathogen requirements in 30 TAC § 312.82(a) or (b) and the vector attraction reduction requirements in 30 TAC § 312.83(b) have been met for each site on which bulk sewage sludge is applied. This determination has been made under my direction and supervision in accordance with the system designed to ensure that qualified personnel properly gather and evaluate the information used to determine that the management practices have been met. I am aware that there are significant penalties for false certification including fine and imprisonment."

6. The recommended agronomic loading rate from the references listed in Section II.C.3. above, as well as the actual agronomic loading rate shall be retained. The person who applies bulk sewage sludge or a sewage sludge material shall develop the following information and shall retain the information at the facility site and/or shall be readily available for review by a TCEQ representative indefinitely. If the permittee supplies the sludge to another person who land applies the sludge, the permittee shall notify the land applier of the requirements for record keeping found in 30 TAC § 312.47 for persons who land apply:

   a. A certification statement that all applicable requirements (specifically listed) have been met, and that the permittee understands that there are significant penalties for false certification including fine and imprisonment. See 30 TAC § 312.47(a)(4)(A)(ii) or 30 TAC § 312.47(a)(5)(A)(ii), as applicable, and to the permittee's specific sludge treatment activities.

   b. The location, by street address, and specific latitude and longitude, of each site on which sludge is applied.

   c. The number of acres in each site on which bulk sludge is applied.

   d. The date and time sludge is applied to each site.

e. The cumulative amount of each pollutant in pounds/acre listed in Table 2 applied to each site.

f. The total amount of sludge applied to each site in dry tons.

The above records shall be maintained on-site on a monthly basis and shall be made available to the Texas Commission on Environmental Quality upon request.

F. Reporting Requirements

The permittee shall report annually to the TCEQ Regional Office (MC Region 11) and Compliance Monitoring Team (MC 224) of the Enforcement Division, by September 30th of each year the following information. Effective September 1, 2020, the permittee must submit this annual report using the online electronic reporting system available through the TCEQ website unless the permittee requests and obtains an electronic reporting waiver.

1. Identify in the following categories (as applicable) the sewage sludge treatment process or processes at the facility: preliminary operations (e.g., sludge grinding and degritting), thickening (concentration), stabilization, anaerobic digestion, aerobic digestion, composting, conditioning, disinfection (e.g., beta ray irradiation, gamma ray irradiation, pasteurization), dewatering (e.g., centrifugation, sludge drying beds, sludge lagoons), heat drying, thermal reduction, and methane or biogas capture and recovery.

2. Identify the nature of material generated by the facility (such as a biosolid for beneficial use or land-farming, or sewage sludge for disposal at a monofill) and whether the material is ultimately conveyed off-site in bulk or in bags.

3. Results of tests performed for pollutants found in either Table 2 or 3 as appropriate for the permittee's land application practices.

4. The frequency of monitoring listed in Section I.C. that applies to the permittee.

5. Toxicity Characteristic Leaching Procedure (TCLP) results.

6. PCB concentration in sludge in mg/kg.

7. Identity of hauler(s) and TCEQ transporter number.

8. Date(s) of transport.

9. Texas Commission on Environmental Quality registration number, if applicable.

10. Amount of sludge disposal dry weight (lbs/acre) at each disposal site.

11. The concentration (mg/kg) in the sludge of each pollutant listed in Table 1 (defined as a monthly average) as well as the applicable pollutant concentration criteria (mg/kg) listed in Table 3 above, or the applicable pollutant loading rate limit (lbs/acre) listed in Table 2 above if it exceeds 90% of the limit.

12. Level of pathogen reduction achieved (Class A, Class AB or Class B).

13. Alternative used as listed in Section I.B.3.(a. or b.). Alternatives describe how the pathogen reduction requirements are met. If Class B sludge, include information on how site restrictions were met.

14. Identify each of the analytic methods used by the facility to analyze enteric viruses, fecal coliforms, helminth ova, *Salmonella* sp., and other regulated parameters.

15. Vector attraction reduction alternative used as listed in Section I.B.4.

16. Amount of sludge transported in dry tons/year.

17. The certification statement listed in either 30 TAC § 312.47(a)(4)(A)(ii) or 30 TAC § 312.47(a)(5)(A)(ii) as applicable to the permittee's sludge treatment activities, shall be attached to the annual reporting form.

18. When the amount of any pollutant applied to the land exceeds 90% of the cumulative pollutant loading rate for that pollutant, as described in Table 2, the permittee shall report the following information as an attachment to the annual reporting form.

    a. The location, by street address, and specific latitude and longitude.

    b. The number of acres in each site on which bulk sewage sludge is applied.

    c. The date and time bulk sewage sludge is applied to each site.

    d. The cumulative amount of each pollutant (i.e., pounds/acre) listed in Table 2 in the bulk sewage sludge applied to each site.

    e. The amount of sewage sludge (i.e., dry tons) applied to each site.

    The above records shall be maintained on a monthly basis and shall be made available to the Texas Commission on Environmental Quality upon request.

SECTION III. REQUIREMENTS APPLYING TO ALL SEWAGE SLUDGE DISPOSED IN A MUNICIPAL SOLID WASTE LANDFILL

A. The permittee shall handle and dispose of sewage sludge in accordance with 30 TAC § 330 and all other applicable state and federal regulations to protect public health and the environment from any reasonably anticipated adverse effects due to any toxic pollutants that may be present. The permittee shall ensure that the sewage sludge meets the requirements in 30 TAC § 330 concerning the quality of the sludge disposed in a municipal solid waste landfill.

B. If the permittee generates sewage sludge and supplies that sewage sludge to the owner or operator of a municipal solid waste landfill (MSWLF) for disposal, the permittee shall provide to the owner or operator of the MSWLF appropriate information needed to be in compliance with the provisions of this permit.

C. The permittee shall give 180 days prior notice to the Executive Director in care of the Wastewater Permitting Section (MC 148) of the Water Quality Division of any change planned in the sewage sludge disposal practice.

D. Sewage sludge shall be tested once during the term of this permit in the Interim I and Interim II phases; annually in the Final phase in accordance with the method specified in both 40 CFR Part 261, Appendix II and 40 CFR Part 268, Appendix I (Toxicity Characteristic Leaching Procedure) or other method, which receives the prior approval of the TCEQ for contaminants listed in Table 1 of 40 CFR § 261.24. Sewage sludge failing this test shall be managed according to RCRA standards for generators of hazardous waste, and the waste's disposition must be in accordance with all applicable requirements for hazardous waste processing, storage, or disposal.

   Following failure of any TCLP test, the management or disposal of sewage sludge at a facility other than an authorized hazardous waste processing, storage, or disposal facility shall be prohibited until such time as the permittee can demonstrate the sewage sludge no longer exhibits the hazardous waste toxicity characteristics (as demonstrated by the results of the TCLP tests). A written report shall be provided to both the TCEQ Registration and Reporting Section (MC 129) of the Permitting and Registration Support Division and the Regional Director (MC Region 11) of the appropriate TCEQ field office within 7 days after failing the TCLP Test.

   The report shall contain test results, certification that unauthorized waste management has stopped and a summary of alternative disposal plans that comply with RCRA standards for the management of hazardous waste. The report shall be addressed to: Director, Permitting and Registration Support Division (MC 129), Texas Commission on Environmental Quality, P. O. Box 13087, Austin, Texas 78711-3087. In addition, the permittee shall prepare an annual report on the results of all sludge toxicity testing. This annual report shall be submitted to the TCEQ Regional Office (MC Region 11) and the Compliance Monitoring Team (MC 224) of the Enforcement Division by September 30 of each year.

E. Sewage sludge shall be tested as needed, in accordance with the requirements of 30 TAC Chapter 330.

F. Record keeping Requirements

   The permittee shall develop the following information and shall retain the information for five years.

1. The description (including procedures followed and the results) of all liquid Paint Filter Tests performed.

2. The description (including procedures followed and results) of all TCLP tests performed.

The above records shall be maintained on-site on a monthly basis and shall be made available to the Texas Commission on Environmental Quality upon request.

G. Reporting Requirements

The permittee shall report annually to the TCEQ Regional Office (MC Region 11) and Compliance Monitoring Team (MC 224) of the Enforcement Division by September 30th of each year the following information. Effective September 1, 2020, the permittee must submit this annual report using the online electronic reporting system available through the TCEQ website unless the permittee requests and obtains an electronic reporting waiver.

1. Identify in the following categories (as applicable) the sewage sludge treatment process or processes at the facility: preliminary operations (e.g., sludge grinding and degritting), thickening (concentration), stabilization, anaerobic digestion, aerobic digestion, composting, conditioning, disinfection (e.g., beta ray irradiation, gamma ray irradiation, pasteurization), dewatering (e.g., centrifugation, sludge drying beds, sludge lagoons), heat drying, thermal reduction, and methane or biogas capture and recovery.

2. Toxicity Characteristic Leaching Procedure (TCLP) results.

3. Annual sludge production in dry tons/year.

4. Amount of sludge disposed in a municipal solid waste landfill in dry tons/year.

5. Amount of sludge transported interstate in dry tons/year.

6. A certification that the sewage sludge meets the requirements of 30 TAC § 330 concerning the quality of the sludge disposed in a municipal solid waste landfill.

7. Identity of hauler(s) and transporter registration number.

8. Owner of disposal site(s).

9. Location of disposal site(s).

10. Date(s) of disposal.

The above records shall be maintained on-site on a monthly basis and shall be made available to the Texas Commission on Environmental Quality upon request.

SECTION IV. REQUIREMENTS APPLYING TO SLUDGE TRANSPORTED TO ANOTHER FACILITY FOR FURTHER PROCESSING

These provisions apply to sludge that is transported to another wastewater treatment facility or facility that further processes sludge. These provisions are intended to allow transport of sludge to facilities that have been authorized to accept sludge. These provisions do not limit the ability of the receiving facility to determine whether to accept the sludge, nor do they limit the ability of the receiving facility to request additional testing or documentation.

A. General Requirements

1. The permittee shall handle and dispose of sewage sludge in accordance with 30 TAC Chapter 312 and all other applicable state and federal regulations in a manner that protects public health and the environment from any reasonably anticipated adverse effects due to any toxic pollutants that may be present in the sludge.

2. Sludge may only be transported using a registered transporter or using an approved pipeline.

B. Record Keeping Requirements

1. For sludge transported by an approved pipeline, the permittee must maintain records of the following:

   a. the amount of sludge transported;

   b. the date of transport;

   c. the name and TCEQ permit number of the receiving facility or facilities;

   d. the location of the receiving facility or facilities;

   e. the name and TCEQ permit number of the facility that generated the waste; and

   f. copy of the written agreement between the permittee and the receiving facility to accept sludge.

2. For sludge transported by a registered transporter, the permittee must maintain records of the completed trip tickets in accordance with 30 TAC § 312.145(a)(1)-(7) and amount of sludge transported.

3. The above records shall be maintained on-site on a monthly basis and shall be made available to the TCEQ upon request. These records shall be retained for at least five years.

C. Reporting Requirements

The permittee shall report the following information annually to the TCEQ Regional Office (MC Region 11) and Compliance Monitoring Team (MC 224) of the Enforcement Division, by September 30th of each year. Effective September 1, 2020, the permittee must submit this annual report using the online electronic reporting system available through the TCEQ website unless the permittee requests and obtains an electronic reporting waiver.

1. Identify in the following categories (as applicable) the sewage sludge treatment process or processes at the facility: preliminary operations (e.g., sludge grinding and degritting), thickening (concentration), stabilization, anaerobic digestion, aerobic digestion, composting, conditioning, disinfection (e.g., beta ray irradiation, gamma ray irradiation, pasteurization), dewatering (e.g., centrifugation, sludge drying beds, sludge lagoons), heat drying, thermal reduction, and methane or biogas capture and recovery.
2. the annual sludge production;
3. the amount of sludge transported;
4. the owner of each receiving facility;
5. the location of each receiving facility; and
6. the date(s) of disposal at each receiving facility.

TCEQ Revision 01/2016

SPECIAL PROVISIONS:

1. This permit is granted subject to the policy of the Commission to encourage the development of area-wide waste collection, treatment, and disposal systems. The Commission reserves the right to amend this permit in accordance with applicable procedural requirements to require the system covered by this permit to be integrated into an area-wide system, if an area-wide system is developed; to require the delivery of the wastes authorized to be collected in, treated by, or discharged from the system, to an area-wide system; or to amend this permit in any other particular to effectuate the Commission's policy. Such amendments may be made when the changes required are advisable for water quality control purposes and are feasible on the basis of waste treatment technology, engineering, financial, and related considerations existing at the time the changes are required, exclusive of the loss of investment in or revenues from any then existing or proposed waste collection, treatment, or disposal system.

2. The permittee shall employ or contract with one or more licensed wastewater treatment facility operators or wastewater system operations companies holding a valid license or registration according to the requirements of 30 TAC Chapter 30, Occupational Licenses and Registrations, and in particular 30 TAC Chapter 30, Subchapter J, Wastewater Operators and Operations Companies.

   This Category C facility must be operated by a chief operator or an operator holding a Category C license or higher. The facility must be operated a minimum of five days per week by the licensed chief operator or an operator holding the required level of license or higher. The licensed chief operator or operator holding the required level of license or higher must be available by telephone or pager seven days per week. Where shift operation of the wastewater treatment facility is necessary, each shift which does not have the on-site supervision of the licensed chief operator must be supervised by an operator in charge who is licensed not less than one level below the category for the facility.

3. The permittee shall maintain and operate the treatment facility in order to achieve optimum efficiency of treatment capability. This shall include required monitoring of effluent flow and quality as well as appropriate grounds and building maintenance.

4. Prior to construction of the re-rated Interim II phase and Final Phase wastewater treatment facilities, the permittee shall submit to the TCEQ Wastewater Permits Section (MC 148) a copy of the approval letter from TCEQ for the plans and specifications for this facility. If the permittee does not have a copy of an approval letter, the permittee shall submit a summary submittal letter in accordance with the requirements in 30 TAC Section 317.1. If requested by the Wastewater Permits Section, the permittee shall submit plans, specifications and a final engineering design report which comply with 30 TAC Chapter 317, Design Criteria for Sewerage Systems. The permittee shall clearly show how the treatment system will meet the Interim II and final permitted effluent limitations and flow required on Page 2 of the permit.

5. The permittee shall notify the TCEQ Regional Office (MC Region 11) and the Applications Review and Processing Team (MC 148) of the Water Quality Division, in writing at least forty-five (45) days prior to the completion of the new facilities on Notification of Completion Form 20007.

6. The Permittee shall provide facility for protection of its wastewater treatment facilities from a 100-year flood.

7. The permittee has submitted evidence of legal restrictions (on file) prohibiting residential structures within the part of the buffer zone not owned by the permittee according to 30 TAC Section 309.13(e)(3). The permittee shall comply with the requirements of 30 TAC Section 309.13(a) through (d). (See Attachment B.)

8. The irrigated crops include turf grass (golf course) and cedar trees (cedar breaks). Application rates to the irrigation land shall not exceed 3.45 acre-feet per year per acre irrigation for 140 acres of golf course irrigation and 4.72 acre-feet per year acre irrigated on 40 acres for irrigation of cedar trees irrigation in the Interim I Phase. Application rates to the irrigation land shall not exceed 3.45 acre-feet per year per acre irrigation for 140 acres of golf course irrigation and 5.95 acre-feet per year acre irrigated on 60 acres for irrigation of cedar trees irrigation in the Interim II Phase. Application rates to the irrigation land shall not exceed 3.45 acre-feet per year per acre irrigation for 140 acres of golf course irrigation and 6.37 acre-feet per year acre irrigated on 100 acres for irrigation of cedar trees irrigation in the Final Phase. The permittee is responsible for providing equipment to determine application rates and maintaining accurate records of the volume of effluent applied. These records shal be made available to review by the Texas Commission on Environmental Quality and shall be maintaned for at least three years.

9. The permittee shall obtain representative soil samples from the root zones of the land application area receiving wastewater. The golf course and cedar breaks application areas shall be subdivided into three subareas each for soil sampling. A map depicting the six permanent soil sampling areas shall be submitted with the annual soil monitoring results. Composite sampling techniques shall be used. Each composite sample shall represent no more than 60 acres. Subsamples shall be composited by like sampling depth and soil type for analysis and reporting. Soil types are soils that have like topsoil or plow layer textures. These soils shall be sampled individually from 0 to 6 inches, 6 inches to 18 inches, and 18 inches to 30 inches below ground level. The permittee shall sample soils in December to February and shall be analyzed within 30 days of sample collection.

   The permittee shall provide annual soil analyses of the land application area according to the following table:

Parameter	Method	Minimum Analytical Level (MAL)	Reporting units
pH	2:1 (v/v) water to soil mixture		Reported to 0.1 pH units after calibration of pH meter
Electrical Conductivity	2:1 (v/v) water to soil mixture	0.01	dS/m (same as mmho/cm)
Nitrate-nitrogen Ammonium-nitrogen	From a 1 N KCl soil extract	1	mg/kg (dry weight basis)
Total Kjeldahl Nitrogen (TKN)	For determination of Organic plus Ammonium	20	mg/kg (dry weight basis)

	Nitrogen. Procedures that use Mercury (Hg) are not acceptable.		
Total Nitrogen	= TKN + nitrate-nitrogen (same as, organic-nitrogen + ammonium-nitrogen + nitrate-nitrogen)		mg/kg (dry weight basis)
Plant-available: Phosphorus (P)	Mehlich III with inductively coupled plasma	1 (P)	mg/kg (dry weight basis)
Plant-available: Potassium (K) Calcium (Ca) Magnesium (Mg) Sodium (Na)	May be determined in the same Mehlich III extract with inductively coupled plasma	5 (K) 10 (Ca) 5 (Mg) 10 (Na)	mg/kg (dry weight basis)
Amendment addition, e.g., gypsum			Report in *short tons/acre* in the year effected

A copy of this soil testing plan shall be provided to the analytical laboratory prior to sample analysis. The permittee shall submit the results of the annual soil sample analyses with copies of the laboratory reports and a map depicting the areas that have received wastewater within the permanent land application fields to TCEQ Regional Office (MC Region 11), the Water Quality Assessment Team (MC 150) and to the Enforcement Division (MC 224) no later than end of September of each year. If wastewater is not applied in a particular year, the permittee shall notify the same TCEQ offices and indicate that wastewater has not been applied on the approved land irrigation site (s) during that year.

10. Irrigation practices shall be designed and managed so as to prevent ponding of effluent or contamination of ground and surface waters and to prevent the occurrence of nuisance conditions in the area. Crops, turf grass, native grasses, cover crops, the golf course or other ground cover shall be established and well maintained in the irrigation area throughout the year for effluent and nutrient uptake by the crop and to prevent pathways for effluent surfacing. Tailwater control facilities shall be provided as necessary to prevent the discharge of any effluent from the irrigated land.

11. Effluent shall not be applied for irrigation during rainfall events or when the ground is frozen or saturated.

12. The permittee shall erect adequate signs stating that the irrigation water is from a non-potable water supply for any area where treated effluent is stored or where there exist hose bibs or faucets. Signs shall consist of a red slash superimposed over the international symbol for drinking water accompanied by the message "DO NOT DRINK THE WATER" in both English and Spanish. All piping transporting the effluent shall be clearly marked with these same signs.

13. Spray fixtures for the irrigation system shall be of such design that they cannot be operated by unauthorized personnel.

14. Irrigation with effluent shall be accomplished only when the area specified is not in use.

15. The permittee shall maintain a long term contract with the owner(s) of the land application

site which is authorized for use in this permit, or own the land authorized for land application of treated effluent.

16. Holding or storage ponds shall conform to the design criteria for stabilization ponds with regard to construction and levee design and shall maintain a minimum freeboard of two feet according to 30 TAC Chapter 217, Design Criteria for Domestic Wastewater Systems.

17. Permanent transmission lines shall be installed from the holding pond to each tract of land to be irrigated utilizing effluent from that pond.

18. Wastewater effluent shall not be applied to rock outcrop exposures within 50 feet of the fault trace

19. The permittee shall maintain a minimum 50-foot buffer from surface water bodies and watercourses in the irrigation areas (Attachments C and D).

20. The wastewater storage pond adjacent to WWTP #2 shall be bermed to a height that is three feet above the 100-year flood level. This berm must be appropriately keyed into the substrate to prevent flooding of the retention structure.

21. The permittee shall inspect the leak detection systems installed at the Fairway Pond 17 and the existing Cedar Break Pond on a monthly basis to identify whether any water is collecting in the system. Upon use of the proposed Cedar Break Pond #2, permittee shall also conduct monthly inspections of the leak detection and leachate collection system of that pond. Permittee shall record the dates and results of the monthly inspections in a log book retained at the facility.

    If any water is present in the leak detection and/or leachate collection systems, the permittee shall obtain a grab sample of the water and analyze it for nitrate-N, nitrite-N, Total Kjeldahl Nitrogen, ammonia-N, total phosphorus, orthophosphate, and fecal coliform. Permittee shall retain a copy of the laboratory results of the grab sample at the facility and make the results available to TCEQ staff. If any pond is found to be leaking, permittee shall implement corrective actions to repair the ponds.

22. The permittee shall comply with the Soil Water/Springs Monitoring Plan submitted in the document "Cedar Breaks Effluent Disposal System Irrigation Management Plan" certified on August 21, 2008 and approved by the TCEQ Water Quality Assessment Team (MC 150). The permittee shall submit the data from the Soil Water/Springs Monitoring Plan to the Water Quality Assessment Team (MC 150) of the Water Quality Division during the month of September of each year. Data reported shall include: the date of survey, the date and amount (in inches) of most recent rain, whether any springs or seeps were located, the locations of the springs and seeps on a site map (if applicable), and laboratory report of the analytical results of the springs and seeps (if applicable).

23. If water quality data collected from existing seeps/springs indicate an increase in parameters outlined in Special Provision 22, or additional seeps/springs shall appear that differ from the baseline assessment, the permittee shall submit a Soil Moisture Monitoring Plan (SMMP) to the TCEQ Water Quality Assessment Team (MC 150) and the TCEQ Regional Office (MC Region 11), for review and comment within 30 days of discovery. This plan shall include, but not be limited to, the following criteria.

a. One soil moisture monitoring device per irrigation zone.
b. Automatic system such that if any one soil moisture monitoring device within an irrigation zone indicates saturation, an alarm located at the irrigation pump station will notify operator of such condition.
c. Maps depicting the proposed locations of the monitoring devices.
d. A moisture monitoring device management plan that illustrates a quarterly testing and maintenance program to ensure that the devices are operational.
e. Once initiated, soil moisture monitoring shall continue for the life of the irrigation system.

Once approved, the permittee shall initiate the SMMP within 60 days and notify TCEQ Regional Office (MC Region 11) and TCEQ Water Quality Assessment Team (MC 150) staff upon initiation.

24. All open areas between trees shall be planted with Bermuda grass and rye grass. The permittee shall use cultural practices to promote and maintain the health and propagation of the Bermuda grass (warm season) and ryegrass (cool season) crops and avoid plant lodging. The permittee shall harvest the crops (cut and remove it from the field) at least one time during the year. Harvesting and mowing dates shall be recorded in a log book kept on site to be made available to TCEQ personnel upon request.

25. The physical condition of the land application fields will be monitored on a weekly basis. Any areas with problems such as surface runoff, surficial erosion, stressed or damaged vegetation will be recorded in the field log kept onsite and corrective measures will be implemented within 24 hours of discovery.

26. The permittee shall identity in the field the evergreen overtree irrigation area with permanent stakes or other visual markers.

27. The Permittee shall implement additional protective measures if data from the Springs/Seeps Monitoring Plan indicate it may be warranted.

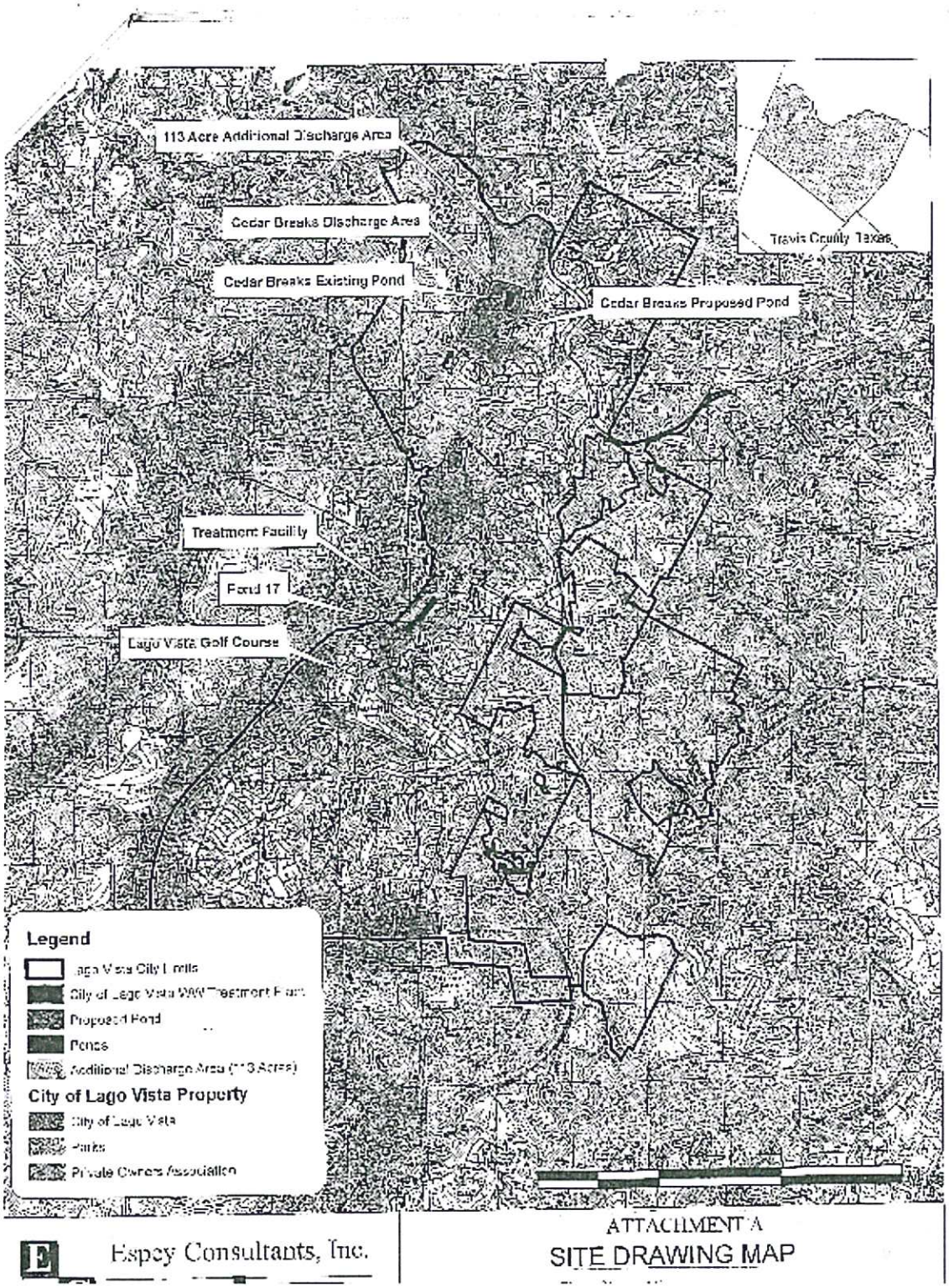
113 Acre Additional Discharge Area
Cedar Breaks Discharge Area
Cedar Breaks Existing Pond
Cedar Breaks Proposed Pond
Travis County Texas
Treatment Facility
Pond 17
Lago Vista Golf Course
Legend
Lago Vista City Limits
City of Lago Vista WW Treatment Plant
Proposed Pond
Ponds
Additional Discharge Area (113 Acres)
City of Lago Vista Property
City of Lago Vista
Parks
Private Owners Association
Espey Consultants, Inc.
ATTACHMENT A
SITE DRAWING MAP

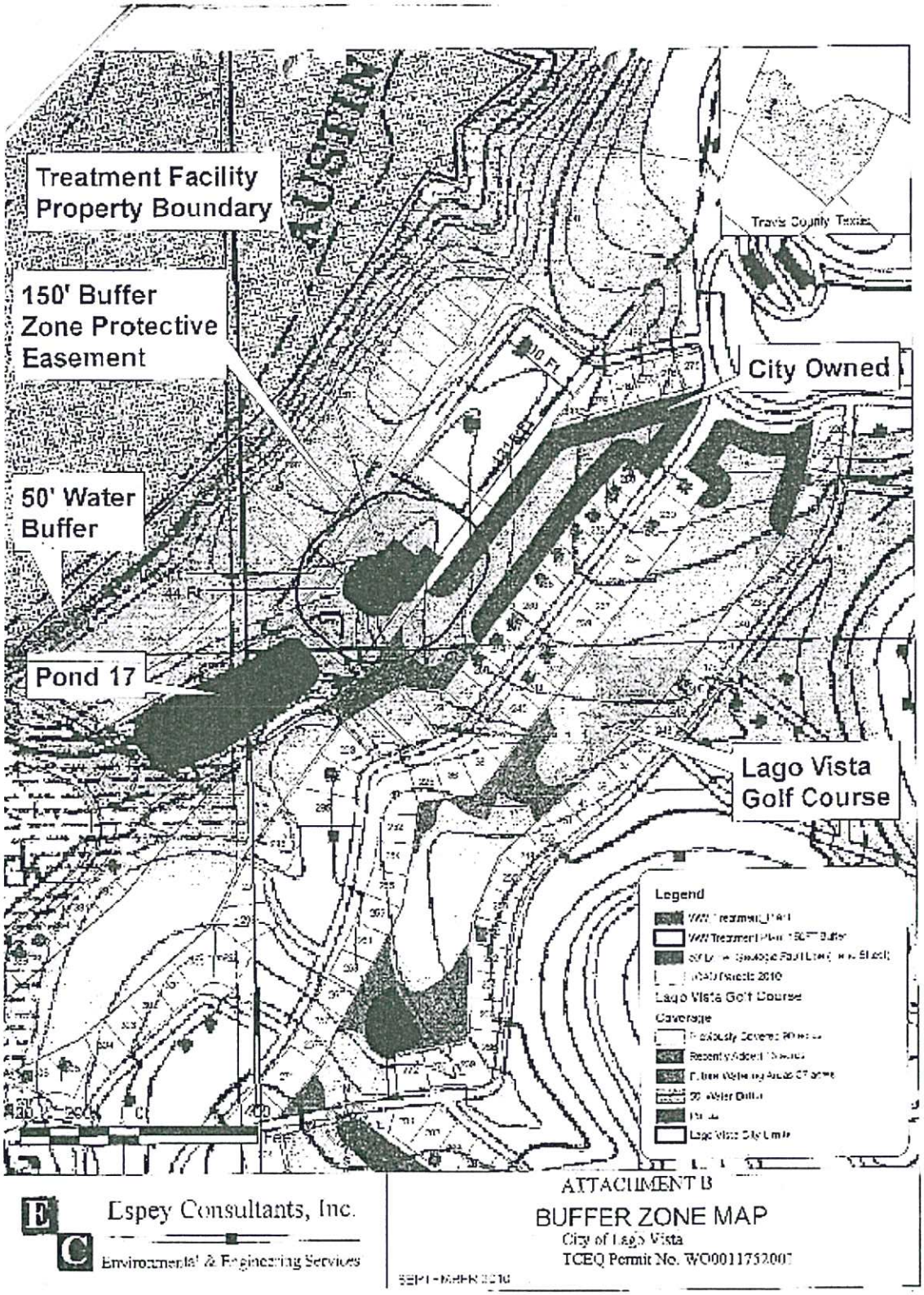
Treatment Facility Property Boundary
150' Buffer Zone Protective Easement
50' Water Buffer
Pond 17
City Owned
Lago Vista Golf Course
Travis County Texas
Legend
Lago Vista Golf Course
Coverage
Espey Consultants, Inc.
Environmental & Engineering Services
ATTACHMENT B
BUFFER ZONE MAP
City of Lago Vista
TCEQ Permit No. WQ0011752001

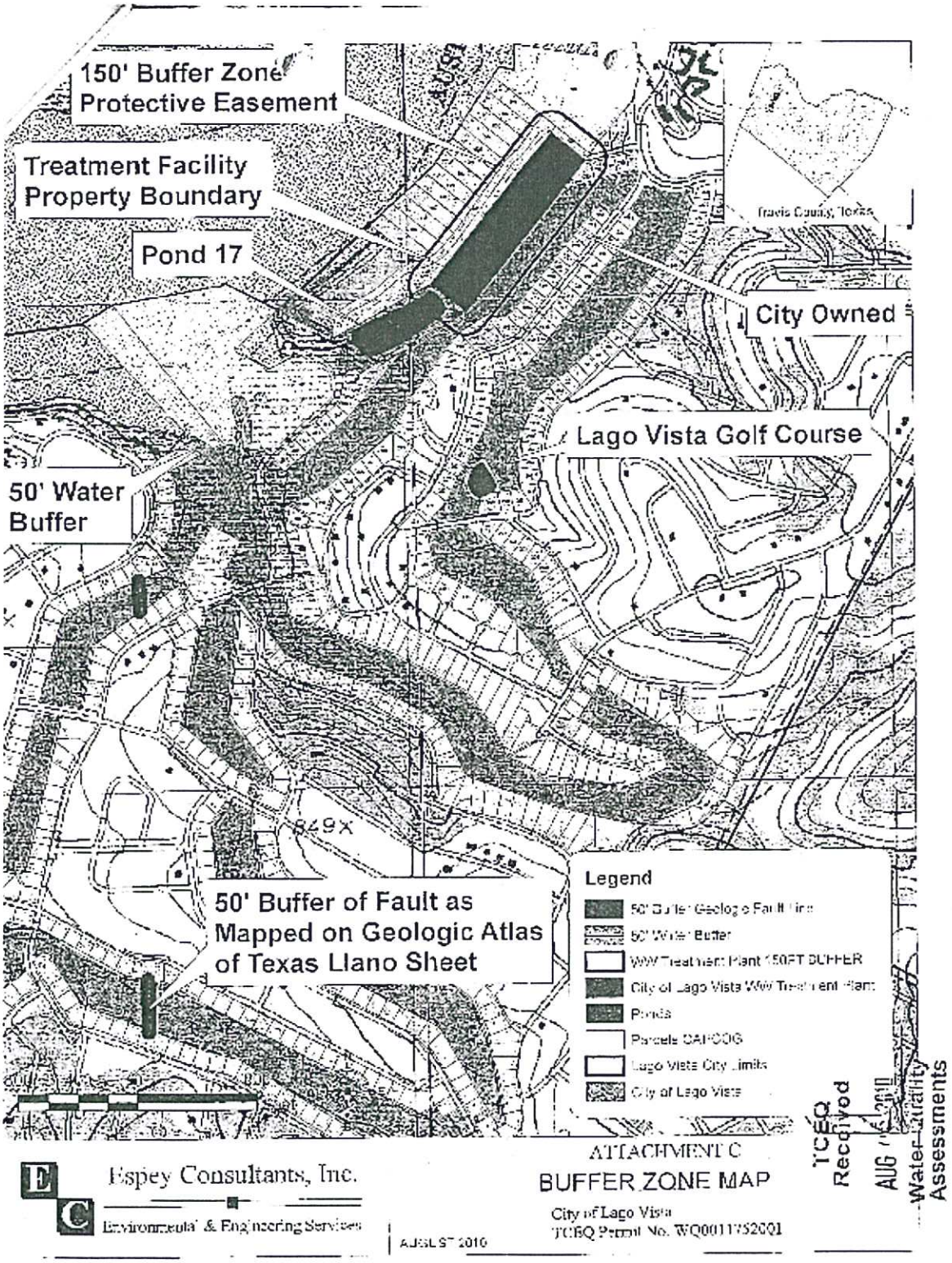
150' Buffer Zone
Protective Easement
Treatment Facility
Property Boundary
Pond 17
City Owned
Lago Vista Golf Course
50' Water
Buffer
50' Buffer of Fault as
Mapped on Geologic Atlas
of Texas Llano Sheet
Legend
Ponds
Parcels CAPCOG
Lago Vista City Limits
City of Lago Vista
Travis County, Texas
TCEQ
Received
Water Quality
Assessments
ATTACHMENT C
BUFFER ZONE MAP
City of Lago Vista
TCEQ Permit No. WQ0011752001
Espey Consultants, Inc.
Environmental & Engineering Services
AUGUST 2010

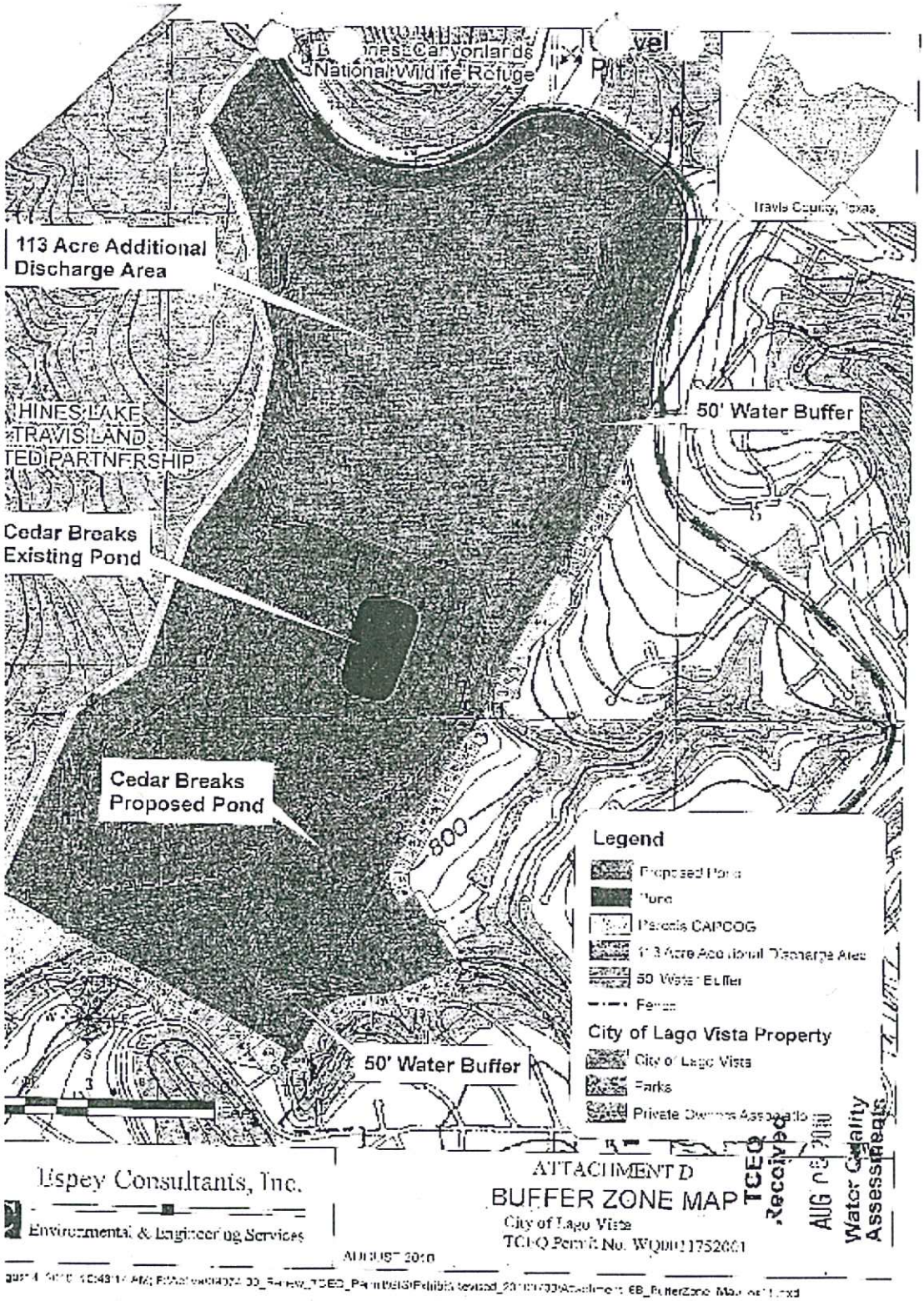
113 Acre Additional Discharge Area
HINES LAKE TRAVIS LAND TED PARTNERSHIP
Cedar Breaks Existing Pond
Cedar Breaks Proposed Pond
50' Water Buffer
50' Water Buffer
Travis County, Texas
800
Legend
Proposed Pond
Pond
Parcels CAPCOG
113 Acre Additional Discharge Area
50 Water Buffer
Fence
City of Lago Vista Property
City of Lago Vista
Parks
Private Owners Association
Espey Consultants, Inc.
Environmental & Engineering Services
ATTACHMENT D
BUFFER ZONE MAP
City of Lago Vista
TCEQ Permit No. WQ0011752001
AUGUST 2010
TCEQ
Received
AUG 09 2010
Water Quality
Assessment

Attachment X

Water Balance and Storage Calculations

Golf Course Monthly Water Balance for 1.5 MGD Scenario

WWTP Capacity (MGD)	1.5
Pond Surface Area (acres)	5.8
Land Application Area (acres)	140

Table 1

1	2	3	4	5	6	7	8	9	10	11	
Month	**Avg Rain**	**Avg Run-off**	**Avg R_i****	**ET****	**L****	**TWN****	**Effluent Required in Root Zone**	**EFRS****	**Effluent Applied to Land**	**CFR****	**Seasonal Variation**
January	2.57	0.65	1.92	1.35	0.00	1.35	0.00	0.000	0.00	0.00	0.00%
February	1.84	0.28	1.56	1.35	0.00	1.35	0.00	0.018	0.00	0.02	0.04%
March	2.86	0.82	2.04	3.42	0.20	3.62	1.58	0.020	1.86	1.88	4.50%
April	2.69	0.72	1.97	4.05	0.30	4.35	2.38	0.061	2.80	2.86	6.84%
May	4.46	1.94	2.52	7.47	0.71	8.18	5.66	0.005	6.66	6.66	15.96%
June	3.04	0.93	2.10	7.74	0.81	8.55	6.44	0.125	7.58	7.70	18.45%
July	2.24	0.47	1.77	8.01	0.89	8.90	7.13	0.192	8.39	8.58	20.55%
August	2.35	0.53	1.82	5.04	0.46	5.50	3.67	0.194	4.32	4.52	10.82%
September	3.03	0.93	2.10	6.21	0.59	6.80	4.69	0.095	5.52	5.62	13.46%
October	3.95	1.56	2.39	4.86	0.35	5.21	2.82	0.003	3.32	3.32	7.96%
November	2.75	0.75	1.99	2.43	0.06	2.49	0.50	0.004	0.58	0.59	1.41%
December	2.26	0.48	1.78	1.08	0.00	1.08	0.00	0.000	0.00	0.00	0.00%
Total	34.03	10.05	23.99	53.01	4.36	57.37	34.87	0.72	41.02	41.74	

Table 2: Storage Volume Calculations

12	13		14A	14B	15	16	17	18B	19	20
Month	**TCEQ Disposal Rate To Land**	**Max. Effluent Applied To Land**	**MRD**(%)**	**Rainfall (MAX)**	**Runoff (MAX)**	**R_i ****	**Total Avail. H_2O**	**Net E (MIN)**	**Storage (in-ac/ac)*****	**AS (in-ac/ac)**
January	0.00	0.00	7.55	3.92	1.54	2.38	2.38	0.000	0.00	2.21
February	0.02	0.02	5.41	2.81	0.79	2.02	2.04	0.006	0.01	2.22
March	1.86	1.88	8.40	4.36	1.86	2.49	4.36	0.006	0.53	2.75
April	2.83	2.86	7.90	4.10	1.67	2.43	5.26	0.019	0.56	3.31
May	6.61	6.66	13.10	6.79	3.86	2.93	9.54	0.002	0.44	3.74
June	7.64	7.70	8.92	4.63	2.07	2.56	10.19	0.038	0.55	4.30
July	8.51	8.58	6.59	3.42	1.18	2.23	10.74	0.059	0.60	4.90
August	4.48	4.52	6.91	3.58	1.30	2.29	6.77	0.060	0.64	0.64
September	5.57	5.62	8.90	4.62	2.06	2.55	8.13	0.029	0.55	1.19
October	3.30	3.32	11.61	6.03	3.21	2.82	6.11	0.001	0.48	1.67
November	0.58	0.59	8.07	4.19	1.74	2.45	3.04	0.001	0.54	2.21
December	0.00	0.00	6.64	3.45	1.20	2.24	2.24	0.000	0.00	2.21
Total	41.40	41.74	100	51.88	22.48	29.40	70.80	0.22	**4.90**	

(Units in inches unless otherwise specified)

***Table EX9(1) was completed in accordance with Table 1 of 30 TAC 309.20. Refer to Appendix C for detailed explanation of calculations.**
**Ri = Infiltrated Rainfall, ET = Evapotranspiration, L = Required Leaching, TWN = Total Water Needs, EFRS = Evaporation From Reservoir Surface, RC = Consumption From Reservoir.
For calculations, a Ce value of 1.5 millimhos/cm at 25°C and a Cl value of 12 were used.
For calculations, disposal rate is for a 1.5 MGD facility (3.45 acre-feet per acre per year) irrigating 140 acres.

***Table EX9(2) was completed in accordance with Table 2 of 30 TAC 309.20. Refer to Appendix C for detailed explanation of calculations.**
**MRD = Mean Rainfall Distribution, Ri = Infiltrated Rainfall, DoM = Distribution of Mean, Net E = Net Evaporation, AS = Accumulated Storage.

Maximum values for Column 13 are the value (total) of Column 11 divided by 12. Note that the values in Column 13 could be adjusted to allow for seasonal variation in effluent output.
The average application rate must be less than or equal to the consumption from reservoir (Column 11).
K is the irrigation efficiency. K value is 0.85 unless specific information is provided to support a different value.

TCEQ Disposal Rate To Land (HAR):	**3.45** acre-feet per acre per year
*****Storage volume requirement =**	**4.90** (in-ac/ac)
*****Storage volume requirement =**	**57.22** ac-ft

References:
https://texreg.sos.state.tx.us/fids/201904970-1.pdf
https://www.hydrocad.net/pdf/TR-55%20Manual.pdf
https://texreg.sos.state.tx.us/public/readtac$ext.TacPage?sl=R&app=9&p_dir=&p_rloc=&p_tloc=&p_ploc=&pg=1&p_tac=&ti=30&pt=1&ch=309&rl=20

Cedar Trees Monthly Water Balance for 1.5 MGD Scenario

WWTP Capacity (MGD)	1.5
Pond Surface Area (acres)	5.57
Land Application Area (acres)	190

Table 1

1	2	3	4	5	6	7	8	9	10	11	
Month	**Avg Rain**	**Avg Run-off**	**Avg R_i****	**ET****	**L****	**TWN****	**Effluent Required in Root Zone**	**EFRS****	**Effluent Applied to Land**	**CFR****	**Seasonal Variation**
January	2.57	1.52	1.05	1.35	0.04	1.39	0.34	0.000	0.40	0.398	0.7%
February	1.84	0.90	0.94	1.35	0.06	1.41	0.46	0.013	0.55	0.559	1.0%
March	2.86	1.77	1.09	3.42	0.33	3.75	2.67	0.014	3.14	3.152	5.8%
April	2.69	1.62	1.07	4.05	0.43	4.48	3.41	0.043	4.01	4.053	7.4%
May	4.46	3.25	1.20	7.47	0.90	8.37	7.16	0.004	8.43	8.430	15.5%
June	3.04	1.93	1.10	7.74	0.95	8.69	7.58	0.088	8.92	9.011	16.5%
July	2.24	1.23	1.01	8.01	1.00	9.01	8.00	0.136	9.41	9.548	17.5%
August	2.35	1.33	1.03	5.04	0.57	5.61	4.59	0.138	5.40	5.535	10.2%
September	3.03	1.93	1.10	6.21	0.73	6.94	5.84	0.068	6.87	6.934	12.7%
October	3.95	2.78	1.17	4.86	0.53	5.39	4.21	0.002	4.96	4.958	9.1%
November	2.75	1.67	1.07	2.43	0.19	2.62	1.55	0.003	1.82	1.826	3.4%
December	2.26	1.25	1.01	1.08	0.01	1.09	0.08	0.000	0.09	0.090	0.2%
Total	34.03	21.18	12.86	53.01	5.74	58.75	45.89	0.51	53.99	54.49	

Table 2: Storage Volume Calculations

12	13		14A	14B	15	16	17	18B	19	20
Month	**Max. Effluent Applied To Land**	**TCEQ Disposal Rate to the Land**	**MRD**(%)**	**Rainfall (MAX)**	**Runoff (MAX)**	**R_i ****	**Total Avail. H_2O**	**Net E (MIN)**	**Storage (in-ac/ac)*****	**AS (in-ac/ac)**
January	0.40	0.56	7.55	3.92	2.75	1.17	1.73	0.00	0.30	1.30
February	0.56	0.78	5.41	2.81	1.73	1.08	1.87	0.004	0.40	1.69
March	3.15	4.42	8.40	4.36	3.16	1.20	5.62	0.004	1.41	3.10
April	4.05	5.69	7.90	4.10	2.91	1.18	6.87	0.013	1.80	4.90
May	8.43	11.83	13.10	6.79	5.51	1.29	13.11	0.001	3.50	8.40
June	9.01	12.64	8.92	4.63	3.42	1.21	13.85	0.027	3.82	12.21
July	9.55	13.39	6.59	3.42	2.28	1.14	14.53	0.042	4.09	16.30
August	5.53	7.76	6.91	3.58	2.43	1.15	8.91	0.042	2.47	18.77
September	6.93	9.73	8.90	4.62	3.41	1.21	10.94	0.021	2.97	21.74
October	4.96	6.95	11.61	6.03	4.76	1.27	8.22	0.001	2.11	23.84
November	1.83	2.56	8.07	4.19	3.00	1.19	3.75	0.001	0.87	0.87
December	0.09	0.13	6.64	3.45	2.31	1.14	1.27	0.000	0.13	1.00
Total	54.49	76.44	100	51.88	37.66	14.22	90.66	0.16	**23.84**	

(Units in inches unless otherwise specified)

***Table EX9(1) was completed in accordance with Table 1 of 30 TAC 309.20. Refer to Appendix C for detailed explanation of calculations.**
**Ri = Infiltrated Rainfall, ET = Evapotranspiration, L = Required Leaching, TWN = Total Water Needs, EFRS = Evaporation From Reservoir Surface, RC = Consumption From Reservoir.
For calculations, a Ce value of 1.5 millimhos/cm at 25°C and a Cl value of 12 were used.
For calculations, disposal rate is for a 1.5 MGD facility (6.37 acre-feet per acre per year) irrigating 190 acres.

***Table EX9(2) was completed in accordance with Table 2 of 30 TAC 309.20. Refer to Appendix C for detailed explanation of calculations.**
**MRD = Mean Rainfall Distribution, Ri = Infiltrated Rainfall, DoM = Distribution of Mean, Net E = Net Evaporation, AS = Accumulated Storage.

Maximum values for Column 13 are the value (total) of Column 11 divided by 12. Note that the values in Column 13 could be adjusted to allow for seasonal variation in effluent output
The average application rate must be less than or equal to the consumption from reservoir (Column 11).
K is the irrigation efficiency. K value is 0.85 unless specific information is provided to support a different value.

TCEQ Disposal Rate To Land (HAR):	**6.37** acre-feet per acre per year
*****Storage volume requirement =**	**23.84** (in-ac/ac)
*****Storage volume requirement =**	**377.48** ac-ft

References

https://texreg.sos.state.tx.us/fids/201904970-1.pdf
https://www.hydrocad.net/pdf/TR-55%20Manual.pdf
https://texreg.sos.state.tx.us/public/readtac$ext.TacPage?sl=R&app=9&p_dir=&p_rloc=&p_tloc=&p_ploc=&pg=1&p_tac=&ti=30&pt=1&ch=309&rl=20

Attachment Y

Highland Lake's Golf Course Reuse Confirmation Letter

Highland Lake's Golf Course Reuse Confirmation Letter

From: Choi Hyok <hyokjoon71@hotmail.com>
Sent: Wednesday, June 11, 2025 8:12 AM
To: Meadows, Jeffrey D. <JDMeadows@GarverUSA.com>
Subject: HIghland Lakes Golf Course

Hi, Jeff, Thanks for reaching out. As discussed, the highland lakes Golf Course has the ability to accept Type 2 reuse from the Lago Vista WWTP and plans to continue using Type 2 reuse for golf course Irrigation.

Thank you

Best Regards
Alex Choi
Owner of Highland lakes golf course

Candice Calhoun

From: Charles West <Charles.West@lagovistatexas.gov>
Sent: Wednesday, September 10, 2025 1:43 PM
To: Candice Calhoun
Cc: Ankita Jain
Subject: Re: WQ0011752001 - Charles West/City of Lago Vista Mailing Address Confirmation

A suite number is not needed and is not required

Charles West
Sent from my iPhone

On Sep 10, 2025, at 1:29 PM, Candice Calhoun <Candice.Calhoun@tceq.texas.gov> wrote:

Good afternoon, Mr. West,

I am working on declaring the application for WQ0011752001 administratively complete and realized that my verification for the mailing address provided for you and the permit showed a suite number. I also double checked my verification by excluding the "Street" in the mailing address and it still came up with the option for a suite number. Can you confirm if a suite number should be included or not? I have placed both snip-its below.

<image004.jpg>

<image005.jpg>

Regards,

<image003.png>

Candice Courville
License & Permit Specialist
ARP Team | Water Quality Division
Texas Commission on Environmental Quality
512-239-4312
candice.calhoun@tceq.texas.gov

Candice Calhoun

From: Jain, Ankita <AJain@GarverUSA.com>
Sent: Friday, July 18, 2025 9:25 AM
To: Candice Calhoun; charles.west@lagovistatexas.gov
Cc: Meadows, Jeffrey D.; Mohammed, Aneesa C.
Subject: RE: Application to Amend Permit No. WQ0011752001 (City of Lago Vista) - Notice of Deficiency
Attachments: Response to NOD dated 07.03.2025_Rev.pdf; USGS Map - Updated July 2025.pdf

Thank you for letting me know.

Please see attached USGS Map file and the rest of the submittal for your review. Please let me know if you have any trouble accessing the new files.

Thanks.

Ankita Jain, PE
Garver
512-539-1972

From: Candice Calhoun <Candice.Calhoun@tceq.texas.gov>
Sent: Friday, July 18, 2025 8:40 AM
To: Jain, Ankita <AJain@GarverUSA.com>; charles.west@lagovistatexas.gov
Cc: Meadows, Jeffrey D. <JDMeadows@GarverUSA.com>; Mohammed, Aneesa C. <ACMohammed@GarverUSA.com>
Subject: RE: Application to Amend Permit No. WQ0011752001 (City of Lago Vista) - Notice of Deficiency

Good morning, Ankita,

Could you please send the whole file separate from the USGS map as the USGS map file is so large it is crashing my Adobe pro every time I try to do anything in the file.

Regards,

Candice Courville
License & Permit Specialist
ARP Team | Water Quality Division
Texas Commission on Environmental Quality
512-239-4312
candice.calhoun@tceq.texas.gov

How is our customer service? Fill out our online customer satisfaction survey at www.tceq.texas.gov/customersurvey

Candice Calhoun

From: Jain, Ankita <AJain@GarverUSA.com>
Sent: Friday, July 18, 2025 9:39 AM
To: Candice Calhoun; charles.west@lagovistatexas.gov
Cc: Meadows, Jeffrey D.; Mohammed, Aneesa C.
Subject: RE: Application to Amend Permit No. WQ0011752001 (City of Lago Vista) - Notice of Deficiency
Attachments: Landowners Mailing Information_Avery 5160 format.docx

Good morning, Candice,

Please find the attached mailing addresses in Avery 5160 format. Hope this helps! Let me know if you need anything else.

Best regards,

Ankita Jain, PE
Garver
512-539-1972

From: Candice Calhoun <Candice.Calhoun@tceq.texas.gov>
Sent: Friday, July 18, 2025 8:43 AM
To: Jain, Ankita <AJain@GarverUSA.com>; charles.west@lagovistatexas.gov
Cc: Meadows, Jeffrey D. <JDMeadows@GarverUSA.com>; Mohammed, Aneesa C. <ACMohammed@GarverUSA.com>
Subject: RE: Application to Amend Permit No. WQ0011752001 (City of Lago Vista) - Notice of Deficiency

Ankita,

These mailing labels are not in the correct format. They need to be in Avery 5160 format.

Regards,

Candice Courville
License & Permit Specialist
ARP Team | Water Quality Division
Texas Commission on Environmental Quality
512-239-4312
candice.calhoun@tceq.texas.gov

How is our customer service? Fill out our online customer satisfaction survey at www.tceq.texas.gov/customersurvey

Candice Calhoun

From: Jain, Ankita <AJain@GarverUSA.com>
Sent: Tuesday, July 22, 2025 9:47 AM
To: Candice Calhoun; charles.west@lagovistatexas.gov
Cc: Meadows, Jeffrey D.; Mohammed, Aneesa C.
Subject: RE: Application to Amend Permit No. WQ0011752001 (City of Lago Vista) - Notice of Deficiency
Attachments: Municipal Disposal Amendment Spanish NORI_Updated.pdf; Municipal Disposal Amendment Spanish NORI_Updated.docx

Candice,

We are currently working on the landowner map and have submitted a request to the County for the most up-to-date GIS data. Given the number of surrounding properties and ongoing changes in the area, there's a possibility that the existing GIS map contains some outdated information.

We'll share the revised map as soon as we receive the updated records from the County. Thank you for your patience.

In the meantime, please find the completed Spanish NORI attached for your review. Thanks again.

Ankita Jain, PE
Garver
512-539-1972

From: Candice Calhoun <Candice.Calhoun@tceq.texas.gov>
Sent: Friday, July 18, 2025 10:04 AM
To: Jain, Ankita <AJain@GarverUSA.com>; charles.west@lagovistatexas.gov
Cc: Meadows, Jeffrey D. <JDMeadows@GarverUSA.com>; Mohammed, Aneesa C. <ACMohammed@GarverUSA.com>
Subject: RE: Application to Amend Permit No. WQ0011752001 (City of Lago Vista) - Notice of Deficiency

Ankita,

Thank you, the response to items 1 through 5 and item 7 are sufficient. However, more information is needed for items 6 and 8. Please see below.

1. Item 6 of the NOD – landowner map – the affected landowner boundaries are not clear. Could you please provide more clear and delineated property boundaries?

2. Item 8 of the NOD – Spanish NORI – The last paragraph was not completed. Please ensure this is completed. Also, the Spanish NORI should be provided in a Microsoft Word Document.

Please let me know if you have any additional questions.

Erwin Madrid

From: Erwin Madrid
Sent: Wednesday, July 23, 2025 11:24 AM
To: 'charles.west@lagovistatexas.gov'
Cc: Candice Calhoun; 'ajain@garverusa.com'
Subject: Application for Permit No. WQ0011752001 – Notice of Deficiency 30-Day Will Return Letter
Attachments: WQ0011752001_Will Return Ltr.pdf

Importance: High

Dear applicant,

The attached Notice of Deficiency 30-Day Will Return Letter was mailed on **July 23, 2025,** requesting additional information needed to declare the application administratively complete. Please mail an original and two copies (with a cover letter) of the complete response by **August 22, 2025.**

Regards,

Erwin Madrid
Team Lead
ARP Team | Water Quality Division
512-239-2191
Texas Commission on Environmental Quality

Please consider whether it is necessary to print this e-mail.

Candice Calhoun

From: Jain, Ankita <AJain@GarverUSA.com>
Sent: Thursday, August 21, 2025 11:35 AM
To: Candice Calhoun; charles.west@lagovistatexas.gov
Cc: Meadows, Jeffrey D.; Mohammed, Aneesa C.
Subject: RE: Application to Amend Permit No. WQ0011752001 (City of Lago Vista) - Notice of Deficiency
Attachments: Landowners Map for Golf ocurse and Cedar Breaks_Combined_08.21.2025.pdf; Golf Course Landowners Mailing Labels_Avery 5160 format.docx; Cedar Breaks Landowners Mailing Labels_Avery 5160 format.docx

Importance: High

Hi Candice,

In response to Item 6 of the NOD – landowner map – Please find attached the Landowners map and information for the Lago Vista Golf Course and Cedar Breaks areas, along with the mailing labels in Avery 5160 format.

I hope this meets your requirements. Please let me know your thoughts.

Ankita Jain, PE
Garver
512-539-1972

From: Candice Calhoun <Candice.Calhoun@tceq.texas.gov>
Sent: Tuesday, July 22, 2025 1:23 PM
To: Jain, Ankita <AJain@GarverUSA.com>; charles.west@lagovistatexas.gov
Cc: Meadows, Jeffrey D. <JDMeadows@GarverUSA.com>; Mohammed, Aneesa C. <ACMohammed@GarverUSA.com>
Subject: RE: Application to Amend Permit No. WQ0011752001 (City of Lago Vista) - Notice of Deficiency

Ankita,

Thank you so much for the update. The Spanish translated NORI you provided looks good and is sufficient.

Also, since the NOD response deadline has passed, you should be receiving a 30-day notice soon, from my manager, Erwin, which essentially provides you with an additional 30 days to provide a complete response.

Please let me know if you have any questions.

Candice Calhoun

From: Jain, Ankita <AJain@GarverUSA.com>
Sent: Monday, September 8, 2025 3:33 PM
To: Candice Calhoun; charles.west@lagovistatexas.gov
Cc: Meadows, Jeffrey D.; Mohammed, Aneesa C.
Subject: RE: Application to Amend Permit No. WQ0011752001 (City of Lago Vista) - Notice of Deficiency
Attachments: Landowners Map for Golf Course_09.08.2025_Revised.pdf; Updated Golf Course Landowner Mailing Information_ Avery 5160_09.08.2025.docx

Hi Candice,

Please see my response below in Red for your review. I've also included the revised landowners map and labels for the Golf Course area.

Thanks,

Ankita Jain, PE
Garver
512-539-1972

From: Candice Calhoun <Candice.Calhoun@tceq.texas.gov>
Sent: Thursday, August 28, 2025 7:26 AM
To: Jain, Ankita <AJain@GarverUSA.com>; charles.west@lagovistatexas.gov
Cc: Meadows, Jeffrey D. <JDMeadows@GarverUSA.com>; Mohammed, Aneesa C. <ACMohammed@GarverUSA.com>
Subject: RE: Application to Amend Permit No. WQ0011752001 (City of Lago Vista) - Notice of Deficiency

Ankita,

Thank you. There are a few additional items needed per the updated map. Please see below:

1. Since landowner labeled as 399 is owned by the applicant and is contiguous with the WWTP site boundaries, this one will need to be labeled as the applicant's property boundary and the affected landowners adjacent to the applicant's contiguous property boundary will need to be delineated and labeled. Also, it seems that there are some parcels adjacent to 449 and 405 (owned by the applicant) that are missing. Please provide an updated landowner map, list, and labels to remove 339 and include all missing parcels/landowners.
    a. Parcel 399 (owned by the City of Lago Vista) has been removed as an affected parcel. All parcels adjacent to 405 and 449 have been included. The landowner map, list, and labels have been updated accordingly (see attached).
    b. Parcel 339 is not owned by the City of Lago Vista, so no changes are needed for that parcel.

2. Please just confirm that no information was able to be located for landowners labeled as 123 and 372.
    a. Confirmed. No information available for these parcels.

3. Affected landowner 405, which is also labeled as Lago Vista WWTP property boundary, shows to be owned by someone other than the applicant. Since that is the case, section 9 of the application will need to be updated to show who owns the land where the facility is located and a lease/easement between the applicant and landowner will need to be provided.
    a. Parcel 405 is owned by the City of Lago Vista.
    b. Could TCEQ be referring to parcel 403 (Travis County MUD #1) instead? The City is currently verifying ownership of parcel 403 with their legal team and will need additional time to confirm. I kindly request an extension and will follow up as soon as confirmation is received.

Please let me know if you have any questions.

Regards,

Candice Courville
License & Permit Specialist
ARP Team | Water Quality Division
Texas Commission on Environmental Quality
512-239-4312
candice.calhoun@tceq.texas.gov

How is our customer service? Fill out our online customer satisfaction survey at www.tceq.texas.gov/customersurvey

---

From: Jain, Ankita <AJain@GarverUSA.com>
Sent: Wednesday, August 27, 2025 3:47 PM
To: Candice Calhoun <Candice.Calhoun@tceq.texas.gov>; charles.west@lagovistatexas.gov
Cc: Meadows, Jeffrey D. <JDMeadows@GarverUSA.com>; Mohammed, Aneesa C. <ACMohammed@GarverUSA.com>
Subject: RE: Application to Amend Permit No. WQ0011752001 (City of Lago Vista) - Notice of Deficiency

Candice,

Please find the revised map with labels attached for your review. Thanks.
Hope this works.

Ankita Jain, PE
Garver
512-539-1972

Comisión de Calidad Ambiental del Estado de Texas

AVISO DE RECIBO DE LA SOLICITUD y
INTENCION DE OBTENER PERMISO PARA LA CALIDAD DEL AGUA
MODIFICACION

PERMISO NO. WQ00_____

SOLICITUD. *La cuidad de Lago Vista*, ha solicitado a la Comisión de Calidad Ambiental de Texas (TCEQ) para modificar el Permiso No. WQ0011752001 de disposición de aguas residuales para autorizar *un aumento en la descarga de aguas residuales tratadas a un volumen que no exceda un flujo promedio diario de 1,500,000 galones por día.*. La planta y el área de disposición están ubicados en *21001 Seminole Drive, Lago Vista,* en el Condado de Travis, Texas *78645.* La TCEQ recibió esta solicitud el *2 de julio del 2025.* La solicitud para el permiso estará disponible para leerla y copiarla en *5803 Thunderbird Street, Lago Vista, en el condado de Travis, Texas* antes de la fecha de publicación de este aviso en el periódico. La solicitud (cualquier actualización y aviso inclusive) está disponible electrónicamente en la siguiente página web: https://www.tceq.texas.gov/permitting/wastewater/pending-permits/tlap-applications.
Este enlace a un mapa electrónico de la ubicación general del sitio o de la instalación es proporcionado como una cortesía y no es parte de la solicitud o del aviso. Para la ubicación exacta, consulte la solicitud.
https://gisweb.tceq.texas.gov/LocationMapper/?marker=-97.998611,30.451388&level=18

Include the following non-italicized sentence if the facility is located in the Coastal Management Program boundary and is an application for a major amendment which will increase the pollutant loads to coastal waters or would result in relocation of an outfall to a critical areas, or a renewal with such a major amendment. The Coastal Management Program boundary is the area along the Texas Coast of the Gulf of México as depicted on the map in 31 TAC §503.1 and includes part or all of the following counties: Cameron, Willacy, Kenedy, Kleberg, Nueces, San Patricio, Aransas, Refugio, Calhoun, Victoria, Jackson, Matagorda, Brazoria, Galveston, Harris, Chambers, Jefferson y Orange. If the application is for amendment that does not meet the above description, do not include the sentence: El Director Ejecutivo de la TCEQ ha revisado esta medida para ver si está de acuerdo con los objetivos y las regulaciones del Programa de Administración Costero de Texas (CMP) de acuerdo con las regulaciones del Consejo Coordinador de la Costa (CCC) y ha determinado que la acción es conforme con las metas y regulaciones pertinentes del CMP.

AVISO DE IDIOMA ALTERNATIVO. El aviso de idioma alternativo en español está disponible en https://www.tceq.texas.gov/permitting/wastewater/pending-permits/tlap-applications.

AVISO ADICIONAL. El Director Ejecutivo de la TCEQ ha determinado que la solicitud es

administrativamente completa y conducirá una revisión técnica de la solicitud. Después de completar la revisión técnica, el Director Ejecutivo puede preparar un borrador del permiso y emitirá una Decisión Preliminar sobre la solicitud. **El aviso de la solicitud y la decisión preliminar serán publicados y enviado a los que están en la lista de correo de las personas a lo largo del condado que desean recibir los avisos y los que están en la lista de correo que desean recibir avisos de esta solicitud. El aviso dará la fecha límite para someter comentarios públicos.**

COMENTARIO PUBLICO / REUNION PUBLICA. Usted puede presentar comentarios públicos o pedir una reunión pública sobre esta solicitud. El propósito de una reunión pública es dar la oportunidad de presentar comentarios o hacer preguntas acerca de la solicitud. La TCEQ realiza una reunión pública si el Director Ejecutivo determina que hay un grado de interés público suficiente en la solicitud o si un legislador local lo pide. Una reunión pública no es una audiencia administrativa de lo contencioso.

OPORTUNIDAD DE UNA AUDIENCIA ADMINISTRATIVA DE LO CONTENCIOSO. Después del plazo para presentar comentarios públicos, el Director Ejecutivo considerará todos los comentarios apropiados y preparará una respuesta a todo los comentarios públicos esenciales, pertinentes, o significativos. **A menos que la solicitud haya sido referida directamente a una audiencia administrativa de lo contencioso, la respuesta a los comentarios y la decisión del Director Ejecutivo sobre la solicitud serán enviados por correo a todos los que presentaron un comentario público y a las personas que están en la lista para recibir avisos sobre esta solicitud. Si se reciben comentarios, el aviso también proveerá instrucciones para pedir una reconsideración de la decisión del Director Ejecutivo y para pedir una audiencia administrativa de lo contencioso.** Una audiencia administrativa de lo contencioso es un procedimiento legal similar a un procedimiento legal civil en un tribunal de distrito del estado.

PARA SOLICITAR UNA AUDIENCIA DE CASO IMPUGNADO, USTED DEBE INCLUIR EN SU SOLICITUD LOS SIGUIENTES DATOS: su nombre, dirección, y número de teléfono; el nombre del solicitante y número del permiso; la ubicación y distancia de su propiedad/actividad con respecto a la instalación; una descripción específica de la forma cómo usted sería afectado adversamente por el sitio de una manera no común al público en general; una lista de todas las cuestiones de hecho en disputa que usted presente durante el período de comentarios; y la declaración "[Yo/nosotros] solicito/solicitamos una audiencia de caso impugnado". Si presenta la petición para una audiencia de caso impugnado de parte de un grupo o asociación, debe identificar una persona que representa al grupo para recibir correspondencia en el futuro; identificar el nombre y la dirección de un miembro del grupo que sería afectado adversamente por la planta o la actividad propuesta; proveer la información indicada anteriormente con respecto a la ubicación del miembro afectado y su distancia de la planta o actividad propuesta; explicar cómo y porqué el miembro sería afectado; y explicar cómo los intereses que el grupo desea proteger son pertinentes al propósito del grupo.

Después del cierre de todos los períodos de comentarios y de petición que aplican, el Director Ejecutivo enviará la solicitud y cualquier petición para reconsideración o para una audiencia de caso impugnado a los Comisionados de la TCEQ para su consideración durante una reunión programada de la Comisión.

La Comisión sólo puede conceder una solicitud de una audiencia de caso impugnado sobre los temas que el solicitante haya presentado en sus comentarios oportunos que no fueron retirados posteriormente. **Si se concede una audiencia, el tema de la audiencia estará limitado a cuestiones de hecho en disputa o cuestiones mixtas de hecho y de derecho relacionadas a intereses pertinentes y materiales de calidad del agua que se hayan presentado durante el período de comentarios.**

LISTA DE CORREO. Si somete comentarios públicos, un pedido para una audiencia administrativa de lo contencioso o una reconsideración de la decisión del Director Ejecutivo, la Oficina del Secretario Principal enviará por correo los avisos públicos en relación con la solicitud. Además, puede pedir que la TCEQ ponga su nombre en una o más de las listas correos siguientes (1) la lista de correo permanente para recibir los avisos del solicitante indicado por nombre y número del permiso específico y/o (2) la lista de correo de todas las solicitudes en un condado especifico. Si desea que se agrega su nombre en una de las listas designe cual lista(s) y envía por correo su pedido a la Oficina del Secretario Principal de la TCEQ.

INFORMACIÓN DISPONIBLE EN LÍNEA. Para detalles sobre el estado de la solicitud, favor de visitar la Base de Datos Integrada de los Comisionados en www.tceq.texas.gov/goto/cid. Para buscar en la base de datos, utilizar el número de permiso para esta solicitud que aparece en la parte superior de este aviso.

CONTACTOS E INFORMACIÓN A LA AGENCIA. Todos los comentarios públicos y solicitudes deben ser presentadas electrónicamente vía http://www14.tceq.texas.gov/epic/eComment/ o por escrito dirigidos a la Comisión de Texas de Calidad Ambiental, Oficial de la Secretaría (Office of Chief Clerk), MC-105, P.O. Box 13087, Austin, Texas 78711-3087. Tenga en cuenta que cualquier información personal que usted proporcione, incluyendo su nombre, número de teléfono, dirección de correo electrónico y dirección física pasarán a formar parte del registro público de la Agencia. Para obtener más información acerca de esta solicitud de permiso o el proceso de permisos, llame al programa de educación pública de la TCEQ, gratis, al 1-800-687-4040. Si desea información en Español, puede llamar al 1-800-687-4040.

También se puede obtener información adicional de *la cuidad de Lago Vista* a la dirección indicada arriba o llamando a *Charles West* al *512-267-1155*.

Fecha de emisión: *[Date notice issued]*

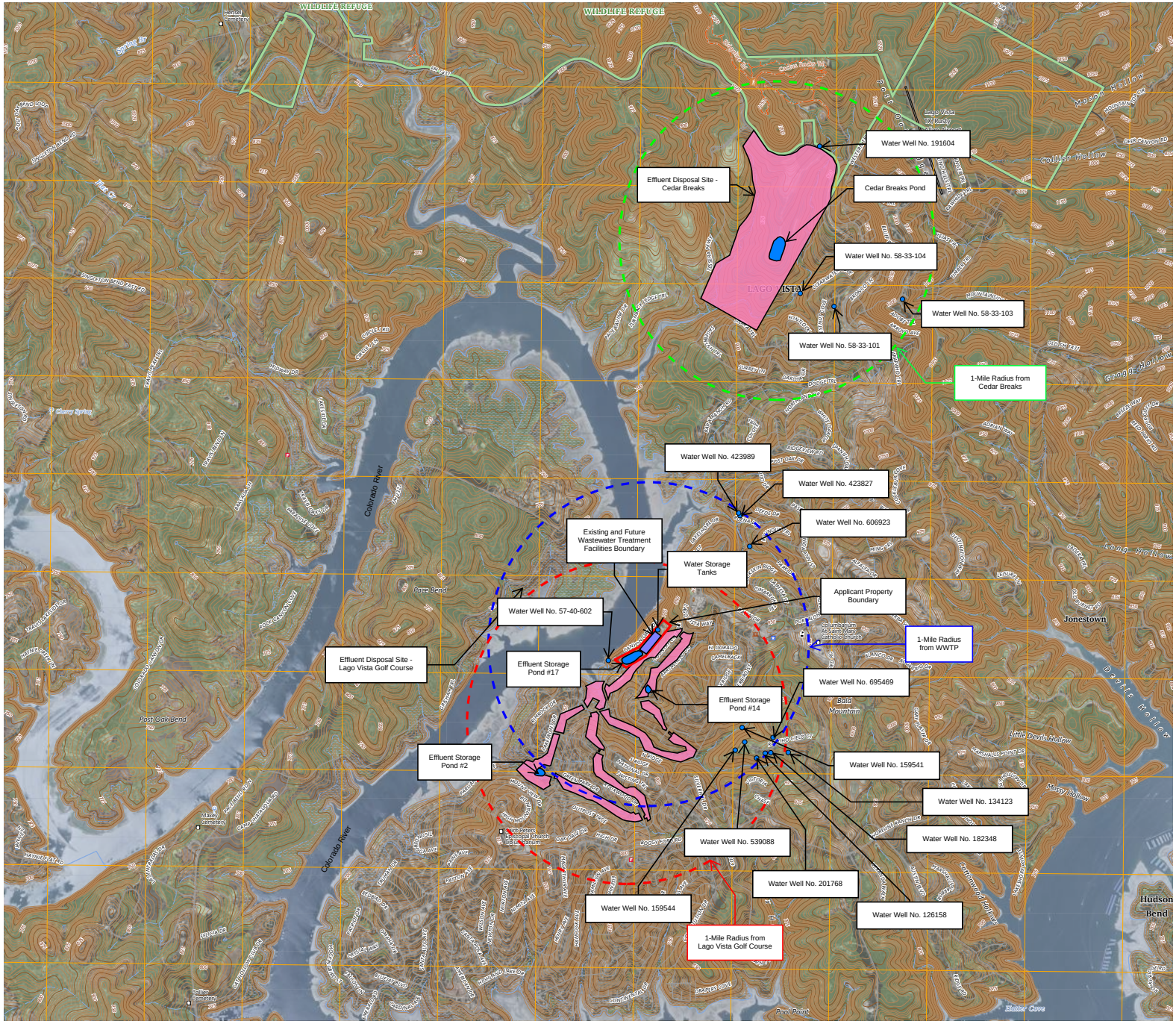

Produced by the United States Geological Survey
North American Datum of 1983 (NAD83)
World Geodetic System of 1984 (WGS84). Projection and
1 000-meter grid: UNIVERSAL TRANSVERSE MERCATOR, ZONE 14R
Data is provided by The National Map (TNM), is the best available at the time of map generation, and includes data content from supporting themes of Elevation, Hydrography, Geographic Names, Boundaries, Transportation, Structures, Land Cover, and Orthoimagery. Refer to associated Federal Geographic Data Committee (FGDC) Metadata for additional source data information.

This map is not a legal document. Boundaries may be generalized for this map scale. Private lands within government reservations may not be shown. Obtain permission before entering private lands. Temporal changes may have occurred since these data were collected and some data may no longer represent actual surface conditions.

Learn About The National Map: https://nationalmap.gov

UTM GRID AND 2025 MAGNETIC NORTH DECLINATION AT CENTER OF SHEET

U.S. National Grid
100,000-m Square ID
NU PU
Grid Zone Designation 14R

SCALE 1:24 000

1 0.5 0 KILOMETERS 1 2
1000 500 0 METERS 1000 2000
1 0.5 0 MILES 1
1000 0 1000 2000 3000 4000 5000 6000 7000 8000 9000 10000 FEET

CONTOUR INTERVAL 5 FEET
NORTH AMERICAN VERTICAL DATUM OF 1988
CONTOUR SMOOTHNESS = Medium

TEXAS
QUADRANGLE LOCATION
Travis Peak | Nameless
Pace Bend | Mansfield Dam
ADJOINING QUADRANGLES

ROAD CLASSIFICATION
Expressway
Secondary Hwy
Ramp
Local Connector
Local Road
4WD
Interstate Route
US Route
State Route

7.5-MINUTE TOPO, TX
2025

GOLDTREE LAND INVESTMENTS LLC (182951)
PO BOX 1878
LAMPASAS, TX 76550-0041

GGEBARA PROPERTIES LLC (183124)
6303 OASIS DR
AUSTIN, TX 78749-1877

GGEBARA PROPERTIES LLC (183125)
6303 OASIS DR
AUSTIN, TX 78749-1877

GGEBARA PROPERTIES LLC (183126)
6303 OASIS DR
AUSTIN, TX 78749-1877

GGEBARA PROPERTIES LLC (183127)
6303 OASIS DR
AUSTIN, TX 78749-1877

TRAVISTIN PROPERTIES LP (183128)
PO BOX 4760
LAGO VISTA, TX 78645-0008

TRAVISTIN PROPERTIES LP (183129)
PO BOX 4760
LAGO VISTA, TX 78645-0008

TRAVISTIN PROPERTIES LP (183130)
PO BOX 4760
LAGO VISTA, TX 78645-0008

CITY OF LAGO VISTA (183131)
PO BOX 4727
LAGO VISTA, TX 78645-0008

TURNBACK DEVELOPMENT LLC (182307)
10 INVERNESS DR E STE 250
ENGLEWOOD, CO 80112-5612

SENTER GREGORY S & TONYA B (183174)
2205 FIRST VW
LEANDER, TX 78641-8849

LATRAN JUDITH A (183176)
2953 LOVERS LN
INGLESIDE, TX 78362-4029

SHARMA LIVING TRUST (183177)
5002 PINERIDGE DR
SUGAR LAND, TX 77479-4210

MUSFELDT ALICE MERRYMAN (183178)
21903 STIRUP CV
LAGO VISTA, TX 78645-4327

BOZYK ALICIA MARIE (183181)
10300 WOMMACK RD
AUSTIN, TX 78748-1349

BOZYK ALICIA MARIE (183182)
10300 WOMMACK RD
AUSTIN, TX 78748-1349

KASPAR MICHAEL (183183)
21909 SURREY LN
LAGO VISTA, TX 78645-4340

KASPAR MICHAEL (183187)
21909 SURREY LN
LAGO VISTA, TX 78645-4340

VILLARREAL ROBERTO IVAN & TERESA VILLARREAL (183188)
3606 TWIN BRANCH DR
CEDAR PARK, TX 78613-7495

PATTON JOYCE (183195)
21700 SIERRA TRL
LAGO VISTA, TX 78645-4317

PRICE FAMILY TRUST (183196)
21704 SIERRA TRL
LAGO VISTA, TX 78645-4317

PRICE FAMILY TRUST (183197)
21704 SIERRA TRL
LAGO VISTA, TX 78645-4317

GLASS CHRISTINE ELIZABETH, WILLIAM (183199)
21708 SIERRA TRL
LAGO VISTA, TX 78645-4317

PAUL RAJESH (183200)
17402 CRAZY ARM RD
ROUND ROCK, TX 78664-2094

TRANKAROFF PETER & BLAGA TRANKAROFF (183201)
10600 LOCKERBIE DR
AUSTIN, TX 78750-4034

COPELAND TERESA (183202)
109 MESA TRL
LEANDER, TX 78641-8934

STOKES DANIEL (183204)
21921 SURREY LN
LAGO VISTA, TX 78645-4340

NRC INC % GARY MCWILLIAMS (183205)
30234 FAIRWAY RUN
FAIR OAKS RANCH, TX 78015-4487

BENTLEY KIMBERLY & LANE (184019)
445 VENTURE BLVD S
LAGO VISTA, TX 78645-8508

RASHID SAMER ASAAD (184020)
8204 CEDAR GLEN CV
LAGO VISTA, TX 78645

PEPE JOSEPH F (184021)
3701 RED BIRD TRL
LAGO VISTA, TX 78645-9748

CITY OF LAGO VISTA (184044)
PO BOX 4727
LAGO VISTA, TX 78645-0008

APEX CONTRACTING GROUP (184045)
1200 WEST AVE APT 724
MIAMI BEACH, FL 33139-4316

HEGBERG STAN (184046)
7016 BUCCANEER TRL
AUSTIN, TX 78729-7840

CITY OF LAGO VISTA (184047)
PO BOX 4727
LAGO VISTA, TX 78645-0008

HEGBERG STAN (184048)
7016 BUCCANEER TRL
AUSTIN, TX 78729-7840

MAREDIA MUNAF (185083)
4213 GALLEGO CIR
AUSTIN, TX 78738-7013

URTADO MICHAEL R & MONIQUE (425151)
21502 SIDEWINDER CV
LAGO VISTA, TX 78645-4343

URTADO MICHAEL R & MONIQUE (458731)
21502 SIDEWINDER CV
LAGO VISTA, TX 78645-4343

TRAVIS COUNTY TRUSTEE (458732)
1648 BAYLAND ST
ROUND ROCK, TX 78664-3746

JAIME RICARDO A CRUZ & ARACELI CHAVEZ HERNANDEZ (459008)
3117 HASKIN RIDGE LN
PFLUGERVILLE, TX 78660-6348

VAVADIVA JIGNESH (459009)
4400 PASADA LANE
ROUND ROCK, TX 78681-1683

SUNIURA JUCIENE & ITAMAR (459010)
7716 TURNBACK LEDGE TRL
LAGO VISTA, TX 78645-4826

SUNIURA JUCIENE & ITAMAR (459011)
7716 TURNBACK LEDGE TRL
LAGO VISTA, TX 78645-4826

SUNIURA JACIENE ANDRADE & (459012)
7716 TURNBACK LEDGE TRL
LAGO VISTA, TX 78645-4826

NAGAIAH BALASUBRAMANIAN (459013)
715 TRAILSIDE BND
ROUND ROCK, TX 78665-2115

EQUITY TRUST COMPANY CUSTODIAN FBO (459014)
6703 WINTON ST
HOUSTON, TX 77021-2428

CANDELARIA MURRAY & AL & CAN LLC (459021)
PO BOX 633
KYLE, TX 78640-0633

VORPAHL MATTHEW & SHANNON GRIBBLE (459205)
7708 DIAMOND TRL
LAGO VISTA, TX 78645-4416

CITY OF LAGO VISTA (498835)
PO BOX 4727
LAGO VISTA, TX 78645-0008

CITY OF LAGO VISTA (566666)
PO BOX 4727
LAGO VISTA, TX 78645-0008

CITY OF LAGO VISTA (566677)
PO BOX 4727
LAGO VISTA, TX 78645-0008

CITY OF LAGO VISTA (566684)
PO BOX 4727
LAGO VISTA, TX 78645-0008

HINES LAKE TRAVIS LAND II LTD PRTNRSP (843633)
100 CONGRESS AVE STE #1900
AUSTIN, TX 78701-4072

HINES LAKE TRAVIS LAND II LTD PRTNRSP (842290)
100 CONGRESS AVE STE #1900
AUSTIN, TX 78701-4072

CITY OF LAGO VISTA (842299)
PO BOX 4727
LAGO VISTA, TX 78645-0008

HINES LAKE TRAVIS LAND II LTD PRTNRSP (842300)
811 MAIN STE 4100
HOUSTON, TX 77002-6125

WALBESSER JAMES & GISELE GONZALEZ-MUNOZ (842324)
22016 CROSS TIMBERS BND
LAGO VISTA, TX 78645-4813

HINES LAKE TRAVIS LAND II LTD PRTNRSP (842393)
100 CONGRESS AVE STE #1900
AUSTIN, TX 78701-4072

HINES LAKE TRAVIS LAND II LP (902475)
2800 POST OAK BLVD STE 4800
HOUSTON, TX 77056-6123

HINES LAKE TRAVIS LAND II LIMITED PARTNERSHIP (921454)
515 CONGRESS STE 1950
AUSTIN, TX 78701-3524

HINES LAKE TRAVIS LAND II LIMITED PARTNERSHIP (973458)
515 CONGRESS STE 1950
AUSTIN, TX 78701-3524

HINES LAKE TRAVIS LAND II LP (973507)
2800 POST OAK BLVD STE 4800
HOUSTON, TX 77056-6123

CHRIST OUR SAVIOR LUTHERAN CHURCH (186695)
PO BOX 4973
LAGO VISTA, TX 78645-0009

US FISH & WILDLIFE SERVICE (368528)
PO BOX 1306
ALBUQUERQUE, NM 87103-1306

LAVERNE DEVELOPERS LLC (185147)
10205 TULAROSA PASS
AUSTIN, TX 78726-2463

JENKINS MAYRE MERCEDES (183132)
193 SHADY ACRES CIR
NIXA, MO 65714-7978

TAMBURRI MITCHELL SEAN (185082)
5005 MCCORMICK MOUNTAIN DR
AUSTIN, TX 78734-1811

TIEMEIER DENNIS & BARBARA (842323)
22001 CROSS TIMBERS BND
LAGO VISTA, TX 78645-4813

()

()

()

()

()

()

()

()

()

()

()

()

()

()

()

()

()

()

SRIYA PROPERTIES LLC (169591)
20707 GREENPARK DR
LAGO VISTA TX 78645-6469

WIEDERKEHR ERIN NICOLE &
MATTHEW DAVID BURNELL (169592)
20705 GREENPARK DR
LAGO VISTA TX 78645-6469

BUTLER DAVID A & JANICE (169593)
4008 ROCKWOOD DR
LAGO VISTA TX 78645-6426

TASSIN MARK R & GENEVA T
(169596)
4088 OUTPOST TRCE
LAGO VISTA TX 78645-6462

SKINNER HENRY & CANDACE
(169601)
4078 OUTPOST TRCE
LAGO VISTA TX 78645-6462

LIEBEL FAITH ANNE & STEPHEN RAY
LIEBEL (169602)
4076 OUTPOST TRCE
LAGO VISTA TX 78645-6462

VELASCO AFIF ANTONIO (169605)
4070 OUTPOST TRCE
LAGO VISTA TX 78645-6462

MCNEW SCOTT R (169606)
4068 OUTPOST TRCE
LAGO VISTA TX 78645-6456

CUNNINGHAM JEFFREY D & ANGELA
MARIE MORRIS (169607)
4066 OUTPOST TRACE
LAGO VISTA TX 78645

PHAM JOSEPH QUAN & LEANN
NGOC LOAN DANG (169610)
4060 OUTPOST TRCE
LAGO VISTA TX USA 78645-6456

PACIFICA REAL ESTATE
MANAGEMENT LLC (169611)
12821 HEINEMANN DR
AUSTIN TX 78727-6917

CURRY LYNDAL LEE & JALINDA
WILSON CURRY (169613)
1004 FOUNTAINWOOD DR
GEORGETOWN TX 78633-1906

PARKHOUSE TUCKER & VERONICA C
NWAHIRI (169614)
4098 OUTPOST TRCE
LAGO VISTA TX 78645-6462

RICHERSON TAMARA LYNN ETAL
(169615)
3530 COUNTY ROAD 341
MCKINNEY TX 75071-0536

RICHERSON TAMARA LYNN ETAL
(169616)
3530 COUNTY ROAD 341
MCKINNEY TX 75071-0536

LYNCH SAMUEL E & KATHY KAY
(169617)
4001 ROCKWOOD DR
LAGO VISTA TX USA 78645-6427

SAARE LLC - LLC 4007 ROCKWOOD
DRIVE PS (169619)
4007 ROCKWOOD DR
LAGO VISTA TX 78645-6427

HUEY JULIE MANN & ALVIN HONG
(169620)
4009 ROCKWOOD DR
LAGO VISTA TX 78645-6427

MARTIN BRENDA FAYE (169621)
4011 ROCKWOOD DR
LAGO VISTA TX US 78645-6427

WHITE JAY WALLACE (173109)
4700 OUTPOST TRCE
LAGO VISTA TX 78645-6340

WHITE JAY WALLACE (173110)
4700 OUTPOST TRCE
LAGO VISTA TX 78645-6340

BOYNE BARBARA (173111)
4606 OUTPOST TRCE
LAGO VISTA TX 78645-6340

KAY COUNTY WELL 2 LLC (173112)
7514 GIRARD AVE STE 1739
LA JOLLA CA 92037-5149

HEIDER GENE M (171356)
21403 LAKEFRONT DR
LAGO VISTA TX 78645-6116

MCNIECE ROBERT G (173304)
PO BOX 4853
LAGO VISTA TX US 78645-0015

ANBRU LLC (173579)
18 SUNSET TRL
SUNSET VALLEY TX 78745-2615

COTTER BRYAN & CLAUDIA E LEAL
(173385)
2018 LAKELINE OAKS DR
CEDAR PARK TX 78613-5004

TAYLOR FAMILY PROPERTIES LLC
(173386)
PO BOX 651
CALDWELL TX 77836-0651

SAHS HOLDINGS LLC (173387)
2597 DEARBORN DR
LOS ANGELES CA 90068-2239

A & TIP AIR CONDITIONING LLC
(173388)
PO BOX 151761
AUSTIN TX 78715-1761

ALVAREZ ANDREW & KIM ELSHOT (173389)
2902 NEWBURYPORT AVE
GARLAND TX 75044-2114

ALVAREZ ANDREW & KIM ELSHOT (173390)
2902 NEWBURYPORT AVE
GARLAND TX 75044-2114

OLIVAS ROBERT E & SHIRLEY R (173391)
17913 CRYSTAL CV
JONESTOWN TX 78645-4429

HUNTER CATHY J & CLARENCE SUMNER HUNTER (173392)
20802 N RIDGE ST
LAGO VISTA TX 78645-6204

CHATHAM SANDRA E (173393)
20804 N RIDGE ST
LAGO VISTA TX 78645-6204

GIBSON JOANNA (173394)
2016 SPYGLASS HL
LEANDER TX USA 78641-8850

GIBSON JOANNA (173395)
2016 SPYGLASS HL
LEANDER TX USA 78641-8850

DROBOT SPENCER LUKE (173429)
21011 TWISTING TRL
LAGO VISTA TX 78645-6440

GRUNAU SHIRLEY R (173432)
21005 TWISTING TRL
LAGO VISTA TX 78645-6440

TWISTING TRAIL PROPERTIES LLC (173433)
21003 TWISTING TRL
LAGO VISTA TX 78645-6440

ASHAR KUNAL & GAYATRI VASAN (173434)
21001 TWISTING TRL
LAGO VISTA TX 78645-6440

SWART HELEN RUTH & DON B BURROWS (173435)
20909 TWISTING TRL
LAGO VISTA TX USA 78645-6418

HOUGHTON BETTY J (173436)
20907 TWISTING TRL
LAGO VISTA TX US 78645-6418

TWISTING TRAILS PROPERTIES LLC (173437)
1918 AMERICAN DR
LAGO VISTA TX 78645-7804

TWISTING TRAILS PROPERTIES LLC (173438)
1918 AMERICAN DR
LAGO VISTA TX 78645-7804

BLOCK ANDREW MICHAEL & VERNA MARIE (173439)
6403 LOHMANS FORD RD
LAGO VISTA TX 78645-5115

VILASANA URIEL (173440)
1201 HIGH CHAPARRAL DR
LEANDER TX 78641-3610

COWAN WYATT & FREDRICK COWAN (173441)
20813 TWISTING TRL
LAGO VISTA TX 78645-6438

LOPEZ DAVID (173442)
20811 TWISTING TRL
LAGO VISTA TX US 78645-6438

LEAFGREEN RICHARD G & SANDRA K (173443)
26 OAKS PL
LAGO VISTA TX 78645-6978

LEAFGREEN RICHARD G & SANDRA K (173444)
26 OAKS PL
LAGO VISTA TX 78645-6978

MCADAMS ROBERT L JR & APRIL M (173445)
20805 TWISTING TRL
LAGO VISTA TX USA 78645-6438

BROWN HELEN W & WILLIAM G (173446)
20703 TWISTING TRL
LAGO VISTA TX 78645-6436

BROWN WILLIAM G & HELEN W (173448)
20703 TWISTING TRL
LAGO VISTA TX 78645-6436

WYLIE A ELEANOR & HELEN BROWN (173450)
20703 TWISTING TRL
LAGO VISTA TX 78645-6436

STRICKER SUSAN L (173451)
20605 TWISTING TRL
LAGO VISTA TX 78645-6408

STRICKER SUSAN L (173452)
20605 TWISTING TRL
LAGO VISTA TX 78645-6408

BLAND SUZANNE (173453)
20601 TWISTING TRL
LAGO VISTA TX 78645-6408

BRUNET MANUEL J (173454)
5705 POOL CANYON CV
AUSTIN TX 78734-1344

LIVE OAK INVESTMENTS LLC (173455)
2906 QUAIL RUN DR
ROUND ROCK TX USA 78681-1214

MASSEY TODD & JILL SUZANNE MOEDER (173456)
4102 OUTPOST TRCE
LAGO VISTA TX 78645-6413

MARTIN BRENDA F & ALEX JACOB MARTIN & STEPHANIE SIERRA MARTIN (173457)
4011 ROCKWOOD DR
LAGO VISTA TX US 78645-6427

GARFIELD DAVID R & TERESA P (173459)
4103 ROCKWOOD DR
LAGO VISTA TX 78645-6429

GARFIELD DAVID R & TERESA P (173460)
4103 ROCKWOOD DR
LAGO VISTA TX 78645-6429

GLAZNER CHRISTOPHER GEORGE & TIFFANY MICHELLE GLAZNER (173461)
4107 ROCKWOOD DR
LAGO VISTA TX 78645-6429

HINSON THERESE A & JAMES (173462)
4111 ROCKWOOD DR
LAGO VISTA TX 78645-6429

HINSON JAMES & THERESE ANN ESTATE (173463)
4111 ROCKWOOD DR
LAGO VISTA TX 78645-6429

HENRY BRADFORD WILLIAM (173464)
4113 ROCKWOOD DR
LAGO VISTA TX 78645-6429

HENRY BRADFORD WILLIAM (173465)
4113 ROCKWOOD DR
LAGO VISTA TX 78645-6429

CAROFFINO RANDY LEWIS & COLLEEN MARIE (173466)
4117 ROCKWOOD DR
LAGO VISTA TX 78645-6429

COLEMAN TYLER ROBERT & ZOE MAYLEONG STANLEY (173467)
4119 ROCKWOOD DR
LAGO VISTA TX 78645-6429

THLYAGARAJAN KRISHNAN & MEENAKSHI KRISHNAN (173468)
34387 BENEDICK LN
FREMONT CA 94555-2136

MILLS JOINT REVOCABLE TRUST (173470)
4125 ROCKWOOD DR
LAGO VISTA TX USA 78645-6430

CHOWDHURY MOYEEDUL (173471)
2907 CHISHOLM TRL
AUSTIN TX 78734-2413

COLEMAN SHERRIE LYNN (173531)
10 CITRUS DR
ROCHESTER NY 14606-4333

HOWERTON DAVID J & SHIRLEY GUSS (173532)
4029 ROUNDTOP DR
SEVIERVILLE TN 37862-5808

ERFAN SAEED & ROYA (173533)
19415 GREENWOOD DR APT 1
CUPERTINO CA 95014-7404

KELLEHER MICHAEL (173534)
412 ARROWHEAD VINE ST
LEANDER TX 78641-5318

LIZANA JOSE LUIS SANCHEZ (173535)
01700 MEXICO D F COL PUEBLO TEFELPAN
NU

BIZSEAN LLC (173552)
14900 AVERY RANCH BLVD, STE C200 #218
AUSTIN TX 78717-3951

BIZSEAN LLC (173553)
14900 AVERY RANCH BLVD, STE C200 #218
AUSTIN TX 78717-3951

SHELTON CHARLES & TIFFANY ASH (173554)
13202 136TH PL NE
KIRKLAND WA 98034-5157

SHELTON CHARLES & TIFFANY ASH (173555)
13202 136TH PL NE
KIRKLAND WA 98034-5157

LEAN MADAME KOK YOON & KWAN AND MADELINE SOO (173556)
5519 N HOLLYWOOD AVE
MILWAUKEE WI 53217-5207

JURCA CORNEL TRUSTEE OF LAKEFRONT TRUST (173557)
19632 HARVEST AVE
CERRITOS CA 90703-6563

MURCHISON KENNA (173558)
1784 157TH LN NW
ANDOVER MN 55304-2795

HART DAVID B & JAMIE A (173559)
21463 LAKEFRONT DR
LAGO VISTA TX 78645-6121

TUOMALA ADAM & SUSAN ELAINE GOSEWEHR (173561)
3955 OUTPOST TRCE
LAGO VISTA TX 78645-6244

FULLER JUSTIN M (173562)
3957 OUTPOST TRCE
LAGO VISTA TX 78645-6244

WHITELAW STEVEN A & MELISSA (173563)
3959 OUTPOST TRCE
LAGO VISTA TX 78645-6244

SCHROCK ABIGAIL & FRANK SOLIZ (173564)
3961 OUTPOST TRCE
LAGO VISTA TX 78645-6244

MARTINEZ DIEGO RICARDO GARCIA (173565)
4001 OUTPOST TRCE
LAGO VISTA TX 78645-6460

SQUIRES JACKLYN & ROBERT (173566)
4003 OUTPOST TRCE
LAGO VISTA TX 78645-6460

KRIEG DIANA SUE & ROBERT T (173567)
4005 OUTPOST TRCE
LAGO VISTA TX USA 78645-6460

ALI KURDO (173568)
2000 CEDAR BEND DR APT 735
AUSTIN TX USA 78758-5338

AGAR STELLAR LLC (173569)
527 CENTERBROOK PL
ROUND ROCK TX 78665-1453

LUKER R W & BETTY (173570)
PO BOX 331654
CORPUS CHRISTI TX 78463-1654

MALLESWARI VITTALAM (173571)
1232 LOW BRANCH LN
LEANDER TX US 78641-919

CITY OF LAGO VISTA (173572)
PO BOX 4727
LAGO VISTA TX 78645-0008

CITY OF LAGO VISTA (173573)
PO BOX 4727
LAGO VISTA TX 78645-0008

DL PHILLIPS HOLDINGS INC (173574)
PO BOX 40159
AUSTIN TX 78704-0003

MONEEM TANVIR & MITALY (173575)
11014 MANSFIELD DR
FRISCO TX USA 75035-6429

GREG SMALL CUSTOM HOMES INC (173576)
7400 LOHMANS FORD RD STE A
LAGO VISTA TX 78645-4

FORS ODIN (173577)
21223 OAK DALE DR
LAGO VISTA TX 78645-6650

HARRISON WILLIAM B & COLLEEN (173578)
21221 OAK DALE DR
LAGO VISTA TX 78645-6650

WEIGELT LAWRENCE W (173580)
21677 HIGH DR
LAGO VISTA TX 78645-6512

KNIGHT KEITH A & TAMARA A (173581)
21675 HIGH DR
LAGO VISTA TX 78645-6512

DESOSA MICHAEL & JACQUELYN (173582)
21673 HIGH DR
LAGO VISTA TX 78645-6512

RAGER JASON & TONI MICHELLE RAGER (173584)
21669 HIGH DR
LAGO VISTA TX 78645-6512

DIEHL JOHN & GWENDOLYN S (173585)
21667 HIGH DR
LAGO VISTA TX 78645-6512

BOYLAN EDMUND & JOANI PEPPER (173623)
4137 ROCKWOOD DR
LAGO VISTA TX 78645-6430

LANCAM ENTERPRISES INC (173624)
6553 STAR CT
LAREDO TX 78041-9140

RODRIGUEZ ISRAEL AGUSTIN & DARLELA AVILA (173625)
4141 ROCKWOOD DR
LAGO VISTA TX 78645-6430

GATES MARILYN J (173626)
4201 ROCKWOOD DR
LAGO VISTA TX 78645-6433

X9 BUILDERS LLC (173627)
210 VAILCO LN
AUSTIN TX 78738-6566

WALKER SHERRI LYNN (173628)
4205 ROCKWOOD DR
LAGO VISTA TX 78645-6433

MAGDALENO JOHN A (173629)
PO BOX 4629
LAGO VISTA TX 78645-0014

SOLIS UBALDO GARCIA (173630)
508 E HOWARD LN TRLR 583
AUSTIN TX USA 78753-9784

BORTOLUSSI SHAWN & DENISE (173631)
4211 ROCKWOOD DR
LAGO VISTA TX 78645-6433

GOMEZ JAVIER C (173670)
44100-44999 GUADALAJARA
JALISCO JARDINES DEL BOSQUE

RIOS-FERRY KATHY & JENNIFER RIOS (173671)
4050 OUTPOST TRCE
LAGO VISTA TX 78645-6456

DIERKER LAWRENCE E & JULIA C (173672)
6509 DURFORD ST
HOUSTON TX 77007-2077

BENSON LEE H & PATRICIA (173673)
4046 OUTPOST TRCE
LAGO VISTA TX 78645-6456

ESCOBAR SAMUEL ALEJANDRO & PAOLA ALEJANDRA DOMINGUEZ (173674)
4044 OUTPOST TRCE
LAGO VISTA TX 78645-6456

TEXAS LONESTAR DIAMOND LLC (173675)
1131 W 18TH ST
HOUSTON TX 77008-3340

BARONAS FAMILY TRUST (173677)
4038 OUTPOST TRCE
LAGO VISTA TX 78645-6456

LANDZA JUDY W (173678)
4036 OUTPOST TRCE
LAGO VISTA TX 78645

UIHLEIN CAROLYN L (173679)
4034 OUTPOST TRCE
LAGO VISTA TX 78645-6456

DLORM ROBERTO B & MARIA LOURDES (173680)
4032 OUTPOST TRCE
LAGO VISTA TX 78645-6456

DLORM ROBERTO & MARIA (173681)
4032 OUTPOST TRCE
LAGO VISTA TX 78645-6456

BESETT IRIS INEZ (173682)
4028 OUTPOST TRCE
LAGO VISTA TX 78645-6456

MILIVOJAC STEVE (173683)
4024 OUTPOST TRCE
LAGO VISTA TX 78645-6456

GOONE RICHARD L & MADELYN K (173684)
4022 OUTPOST TRCE
LAGO VISTA TX 78645-6456

BARRETT N LEE & HELEN H TRSTE (173686)
4018 OUTPOST TRCE
LAGO VISTA TX 78645-6453

AP BUILDING PROJECTS LLC (173687)
223 W RHAPSODY DR
SAN ANTONIO TX 78216-3107

TRIANGLE @ RIVERSIDE LLC (173688)
PO BOX 29343
AUSTIN TX 78755-6343

BUNNELL TRACY (173689)
21203 GREENPARK DR
LAGO VISTA TX 78645-6475

BURNS MELISSA (173690)
21201 GREENPARK DR
LAGO VISTA TX 78645-6475

SCHULTZ ERIK (173691)
21111 GREENPARK DR
LAGO VISTA TX 78645-6423

SCHULTZ ERIK (173692)
21109 GREENPARK DR
LAGO VISTA TX 78645-6423

MARTINEZ AMBROCIO LOPEZ (173693)
9700 HANSFORD DR
AUSTIN TX 78753-4318

WALKER JOHN (173694)
21105 GREENPARK DR
LAGO VISTA TX 78645

WHEATLEY KRISTIN & GREG (173697)
21101 GREENPARK DR
LAGO VISTA TX 78645-6423

GORDEEV DMITRY (173698)
248 ADDIE ROY RD STE A-204
AUSTIN TX 78746-4134

HUEY MARGARET YVONNE & THOMAS (173699)
603 WINNSBORO CV
ROUND ROCK TX USA 78664-3226

HUEY YVONNE & THOMAS HUEY JR (173700)
603 WINNSBORO CV
ROUND ROCK TX 78664-3226

CLAY STEPHANIE (173752)
21487 LAKEFRONT DR
LAGO VISTA TX 78645-6121

ALEXANDRESCU PATRICIA A & STEPHANIE CLAY (173753)
22 HIGHLAND MEWS
GLEN COVE NY 11542-2763

CLAY STEPHANIE (173754)
21487 LAKEFRONT DR
LAGO VISTA TX 78645-6121

PETERSEN NEAL A (173755)
PO BOX 27902
AUSTIN TX 78755-7902

GIROUARD PAUL & JOHANNA M (173757)
21665 HIGH DR
LAGO VISTA TX 78645-6512

LEWIS RICKY L & TONY PAULETTE LEWIS (173758)
PO BOX 4756
LAGO VISTA TX 78645-0008

MUMFORD BOBBY R & DEBORAH A (173759)
21661 HIGH DR
LAGO VISTA TX 78645-6512

VAUGHN DAVID ALBERT (173760)
140 RIDGEVIEW CT
GEORGETOWN TX USA 78628-6026

HOYT JESSICA L (173763)
21653 HIGH DR
LAGO VISTA TX 78645-6512

CITY OF LAGO VISTA (173764)
PO BOX 4727
LAGO VISTA TX 78645-0008

CITY OF LAGO VISTA (173765)
PO BOX 4727
LAGO VISTA TX 78645-0008

LANDAUER WENDY E (173766)
3544 S RANCH ROAD 620 # 11207
BEE CAVE TX US 78738

HILO PROPERTIES LLC (173913)
56 LEGEND LN
HOUSTON TX 77024-2400

ROBERTSON JAMES C (173941)
3903 LAKE PARK CV
LAGO VISTA TX 78645-6109

ROBERTSON JAMES C (173942)
3903 LAKE PARK CV
LAGO VISTA TX 78645-6109

BIZSEAN LLC (175446)
14900 AVERY RANCH BLVD
AUSTIN TX 78717-3951

FROSS ELISA J (175447)
20603 DEEP CRK
LAGO VISTA TX 78645-6034

GARCIA-BRADY TODD & SOLEDAD (175448)
20601 DEEP CRK
LAGO VISTA TX 78645-6034

BRADY-GARCIA TODD & SOLEDAD (175449)
20601 DEEP CRK
LAGO VISTA TX 78645-6034

LITTLE ROCK BUILDERS INC (175450)
8105 W 121ST ST
GRAND PRAIRIE, ALBERTA, CANADA T8W 0M7

BRZESKI ALEXANDER TOMASZ (175451)
20700 DEEP CRK
LAGO VISTA TX US 78645-5040

EVANS MARLY (175452)
20702 DEEP CRK
LAGO VISTA TX USA 78645-5040

BRUNET MANUEL J (175453)
5705 POOL CANYON CV
AUSTIN TX 78734-1344

SERVICEKARMA LLC (175454)
14608 IVEANS WAY
AUSTIN TX USA 78717-4179

BAGLEY JACOB GALEN (175455)
20707 FALCON
LAGO VISTA TX 78645

MUYEED KAFIL H S & UZMA S J MUYEED (175456)
8312 PRAIRIE RYE DR
LAGO VISTA TX 78645-2095

VANDEGRIFF JOSEPH & BARBARA (175457)
20703 FALCON
LAGO VISTA TX 78645-6076

KHAWAJA KASHIF R & KHURRAM KHAWAJA (175459)
6612 AVENIDA ANN DR
LAGO VISTA TX 78645-5007

CHAKMA SURAJ (175460)
6008 MILANO DR
PLANO TX 75093-7084

DE LA CRUZ ERIC OUDIE & BRITTANY (175461)
4801 APACHE CV
LAGO VISTA TX USA 78645-6045

IYER MEENA (175466)
17110 MAJESTIC RIDGE RD
AUSTIN TX 78738-1208

CULVER JERRY DAN & KATHLEEN DALE (175467)
4802 MUSTANG RD
LAGO VISTA TX 78645-6302

SUDARMANTO BAMBANG & CHIQUITA P (175469)
1700 SOUTHCREEK DR
LEANDER TX 78641-7917

RIZK DEBBIE L (175470)
4702 OUTPOST TRCE
LAGO VISTA TX 78645-6340

MANGRUM JOHN & BARBARA (175471)
4806 TURNBACK ST
LAGO VISTA TX 78645-6036

ALLEN RUSSELL L REVOCABLE TRUST (175473)
15907 ABERDEEN TRAILS DR
HOUSTON TX 77095-3730

KAM KYUNG SOO (175474)
1714 CARRIAGE WAY
SUGAR LAND TX 77478-4201

SALOMON CHARLES L & JACQUELINE A (175475)
21205 KIOWA CV
LAGO VISTA TX 78645-6000

KELLEY PATRICIA JEANNINE (175476)
21203 KIOWA CV
LAGO VISTA TX 78645-6000

WHEELER JENNIFER (175478)
4800 TURNBACK ST
LAGO VISTA TX USA 78645-6037

VISTA ESTATES LLC (175500)
4558 CAPE CHARLES DR
PLANO TX 75024-7342

VISTA ESTATES LLC (175501)
4558 CAPE CHARLES DR
PLANO TX 75024-7342

PARKS KINUE ESTATE (175502)
886 PARTRIDGE AVE
MENLO PARK CA 94025-5216

DAVIS FANNI MIRIAM (175503)
7411 NICHOLFOREST LN
SPRING TX USA 77389-2113

C&A HOMES (175504)
PO BOX 3066
CEDAR PARK TX 78630-3066

WOLF RANDY WARREN & ELIZABETH JOAN (175506)
4803 COUNTRY CLUB DR
LAGO VISTA TX 78645-6073

GIBSON SUSIE A LIFE ESTATE (175507)
4903 COUNTRY CLUB DR
LAGO VISTA TX 78645-6025

TWISTING TRAILS PROPERTIES LLC (175508)
21003 TWISTING TRL
LAGO VISTA TX 78645-6440

ARTEAGA JOSE S & CHANELLE M (175509)
PO BOX 5782
LAGO VISTA TX US 78645-0027

LOFTIS WYNN EUGENE & TAMI DENISE (175511)
4703 SIOUX
LAGO VISTA TX 78645

MANEY PATRICIA (175512)
4704 SIOUX
LAGO VISTA TX 78645-6007

HENDERSON MONICA I & DANIEL L HENDERSON (175513)
4702 SIOUX
LAGO VISTA TX 78645

WENDL STEPHANIE & MARKUS WENDL (175517)
4705 HUACO CV
LAGO VISTA TX 78645

MCDONALD KAREN (175518)
4706 HUACO CV
LAGO VISTA TX 78645-6008

GRANGER JOHN RYAN & LEANDRA KAYE (175523)
4705 COMACHE
LAGO VISTA TX USA 78645

CHAN YING WAI (175524)
4704 COMANCHE
LAGO VISTA TX 78645-6006

SHIVE JOHN L & DOROTHY J (175530)
4707 NAVAJO CV
LAGO VISTA TX 78645-6062

WELLMAN THOMAS & JANE ANN WELLMAN (175536)
4805 ARROWHEAD DR
LAGO VISTA TX US 78645-6003

CALDWELL FAMILY TRUST (175537)
4905 ARROWHEAD DR
LAGO VISTA TX 78645-2272

BLACK MICHAEL T (175538)
4511 W CHEYENNE AVE STE 601
N LAS VEGAS NV 89032-2464

COOPER RUSSELL (175539)
20909 TOMAHAWK ST
LAGO VISTA TX 78645-6050

GSJ GROUP LLC (175540)
2205 W PARMER LN # 201
AUSTIN TX 78727-4331

HUYCK RICHARD & SUSAN REVOCABLE TRUST (175543)
20901 TOMAHAWK ST
LAGO VISTA TX 78645-6050

NGUYEN HUY H (175544)
20807 TOMAHAWK ST
LAGO VISTA TX 78645-6082

NGUYEN HUY H (175545)
20807 TOMAHAWK ST
LAGO VISTA TX 78645-6082

NGUYEN HUY H (175546)
20807 TOMAHAWK ST
LAGO VISTA TX 78645-6082

ROSS JAMES F & KAY A (175547)
20803 TOMAHAWK ST
LAGO VISTA TX 78645-6082

DEGRAFFENREID RICHARD LEE JR & (175550)
4704 THUNDERBIRD
LAGO VISTA TX 78645-2018

WHITE JONATHAN HILARY & MINDY ANN SCHROEDER (175568)
21520 LAKEFRONT DR
LAGO VISTA TX 78645-6123

GREEN FIELD TEXAS LLC (175569)
26 WOODGROVE
IRVINE CA 92604-4628

IBARRA MIGUEL A (175570)
20708 DEEP CRK
LAGO VISTA TX 78645-5040

DOWLING R & S TRUST (175572)
20207 BUCHANAN CV
LAGO VISTA TX US 78645-71

WANGSGARD JEFF (175573)
10028 S MORGAN GROVE WAY
SANDY UT 84092-4445

MERKA DANIEL ANTON (175574)
4705 THUNDERBIRD
LAGO VISTA TX USA 78645-2018

BELSHER TERRY W & SUSAN S (175642)
415 SHOALS PKWY
BURNET TX US 78611-5537

YALLALY MARTHA M & RANDALL L LAWSON (175602)
2806 PINE VALLEY DR
CHAMPAIGN IL 61822-7984

PHAM JOSEPH & LEA ANN DANG (175603)
1616 WEATHERFORD DR
AUSTIN TX 78753-2041

MCDONALD MICHAEL S & CINDY A GRECO-MCDONALD (175604)
21103 TWISTING TRL
LAGO VISTA TX 78645-6441

HAMBLIN MARILYN B & CHARLES M (175605)
21101 TWISTING TRL
LAGO VISTA TX 78645-6441

MONAHAN THOMAS P & CARMEN M LIVING TRUST (175606)
21015 TWISTING TRL
LAGO VISTA TX 78645-6439

MONAHAN THOMAS P AND CARMEN M LIVING TRUST (175607)
21015 TWISTING TRL
LAGO VISTA TX 78645-6439

HARPER SETH & MAYLLYN HARPER (175617)
735 JERRYS LN
BUDA TX 78610-2905

COUGHENOUR MARK D (175618)
9564 COMMONWEALTH RD
BENTONVILLE AR 72712-8893

BARRETT ARCHIE D & MIRIAM R (175619)
18002 AUSTIN BLVD
LAGO VISTA TX 78645-9701

HUMMING BIRD INVESTMENTS LP & BLUE MOUNTAIN CAPITAL LLC (175620)
1718 CAPITOL AVE
CHEYENNE WY 82001-4528

HUMMING BIRD INVESTMENTS LP & BLUE MOUNTAIN CAPITAL LLC (175621)
1718 CAPITOL AVE
CHEYENNE WY 82001-4528

HUMMING BIRD INVESTMENTS LP & BLUE MOUNTAIN CAPITAL LLC (175622)
1718 CAPITOL AVE
CHEYENNE WY 82001-4528

HUMMING BIRD INVESTMENTS LP & BLUE MOUNTAIN CAPITAL LLC (175623)
1718 CAPITOL AVE
CHEYENNE WY 82001-4528

HUMMING BIRD INVESTMENTS LP & BLUE MOUNTAIN CAPITAL LLC (175624)
1718 CAPITOL AVE
CHEYENNE WY 82001-4528

VO TRINH THI THUY (175625)
11716 RYDALWATER LN
AUSTIN TX 78754-5734

SHEIKH MUHAMMAD SUFYAN (175626)
3748 HOMEPLACE DR
CELINA TX 75009-1766

DAVIS JESSIE NELL (175629)
2420 PHARR DR
MCKINNEY TX US 75072-2447

BHUMI ESTATES LLC (175630)
1005 EVERGLADES DR
ALLEN TX 75013-5651

SUI MANSHI & PENG CHEN (175631)
75 PARK LN S UNIT 422
JERSEY CITY NJ USA 07310-3164

WOLF RANDY & ELIZABETH WARREN (175632)
4803 COUNTRY CLUB DR
LAGO VISTA TX 78645-6073

WOLF RANDALL WARREN & ELIZABETH JOAN WARREN (175633)
4803 COUNTRY CLUB DR
LAGO VISTA TX 78645-6073

DURAN ANNA M & JOSE ANGEL MAYO DURAN (175635)
2200 NATHAN DR
AUSTIN TX 78728-4515

SMALL GREG (175637)
4708 TURNBACK ST
LAGO VISTA TX 78645-6015

SMALL GREG (175638)
4708 TURNBACK ST
LAGO VISTA TX 78645-6015

VARGAS MILAGROS & ALEJANDRO ESCOTO (175639)
4704 TURNBACK ST
LAGO VISTA TX 78645-6015

MARKERT DAVID & CHRISTIE (175640)
4702 TURNBACK ST
LAGO VISTA TX 78645-6015

TRAVIS APRIL (175641)
11107 2ND ST
JONESTOWN TX 78645-3208

BELSHER TERRY W (175643)
415 SHOALS PKWY
BURNET TX US 78611-5537

SPEARS WADE (175644)
4722 COUNTRY CLUB DR
LAGO VISTA TX 78645-6016

BAUMHOLSER JUSTIN & MISTY (175645)
4720 COUNTRY CLUB DR
LAGO VISTA TX 78645-6016

ELLIS JAY & CAROLINA BENITEZ (175646)
4718 COUNTRY CLUB DR
LAGO VISTA TX USA 78645-6016

SMITH TRACY (175647)
4732 COUNTRY CLUB DR
LAGO VISTA TX 78645-6022

SMITH TRACY & MELINDA (175648)
4732 COUNTRY CLUB DR
LAGO VISTA TX 78645-6022

SMITH TRACY & MELINDA (175649)
4732 COUNTRY CLUB DR
LAGO VISTA TX 78645-6022

DUNCAN DARLENE D (175650)
4710 COUNTRY CLUB DR
LAGO VISTA TX 78645-6016

YEUNG WAI LUNG & MEI CHIU CHIU (175651)
5421 SUNSTAR CMN
FREMONT CA 94555-2961

TAYLOR NICHOLAS & COURTNEY NICOLE NORMAN (175652)
4706 COUNTRY CLUB DR
LAGO VISTA TX USA 78645-6016

CITY OF LAGO VISTA (175653)
PO BOX 4727
LAGO VISTA TX 78645-0008

BEAGLE JEFF & CLARE (175654)
4702 COUNTRY CLUB DR
LAGO VISTA TX USA 78645-6016

EGC OIL LLC (175657)
3720 GREENHOUSE RD
HOUSTON TX 77084-5512

GRIMALDO GONZALO (175658)
8601 SHOWERS DR
ELGIN TX 78621-5279

SMYTH DAVID (175659)
1509 E NEW HOPE DR
CEDAR PARK TX 78641-5100

SMYTH DAVID (175660)
1509 E NEW HOPE DR
CEDAR PARK TX 78641-5100

BRADY TODD WARREN & KEVIN MICHAEL MORGAN (175661)
20601 DEEP CRK
LAGO VISTA TX 78645-6034

ARELLANO PAULINA RUIZ VELASCO (175662)
123 LA CIMA
BOERNE TX USA 78006-3095

ARELLANO PAULINA RUIZ VELASCO (175663)
123 LA CIMA
BOERNE TX USA 78006-3095

INGRAM CURTIS & MIRKA (175664)
20703 DEEP CRK
LAGO VISTA TX USA 78645-5040

HENDRICKSON JUSTIN & ALLISON (175688)
21413 LAKEFRONT DR
LAGO VISTA TX 78645-6116

LYNN IRIS (175689)
3101 S OCEAN DR NO 3003
HOLLYWOOD FL US 33019-2804

CITY OF LAGO VISTA (175690)
PO BOX 4727
LAGO VISTA TX 78645-0008

ZADOO HARSH & SANDHYA (175691)
11412 MIRAMONTE CV
AUSTIN TX 78759-3989

SKRINE JOHN D & JEAN (175781)
3925 OUTPOST TRCE
LAGO VISTA TX 78645-6242

WILDER CHRIS L & KELLI L WALDE (175782)
3927 OUTPOST TRCE
LAGO VISTA TX 78645-6242

GRACE JASON & GLORIA (175783)
3929 OUTPOST TRCE
LAGO VISTA TX USA 78645-6242

GEORGE NICHOLAS & KELSEY PAL (175784)
3931 OUTPOST TRCE
LAGO VISTA TX USA 78645-6242

SULLIVAN KEVIN P (175785)
3933 OUTPOST TRCE
LAGO VISTA TX 78645-6242

SCHMIDT GARY WAYNE & NANCY LETICIA (175786)
3935 OUTPOST TRCE
LAGO VISTA TX 78645-6242

REYES SHAWN PAUL & KRISTIE FLORES REYES (175787)
3937 OUTPOST TRCE
LAGO VISTA TX 78645-6242

MIKULAK JAMES & KATIE (175788)
3939 OUTPOST TRCE
LAGO VISTA TX 78645-6242

SLOAN DON & LORI (175789)
3941 OUTPOST TRCE
LAGO VISTA TX 78645-6242

LG OUTPOST LLC (175790)
6015 LOHMANS FORD RD STE 106
LAGO VISTA TX 78645-5161

GENDRON BRIAN & ANGELA FOSTER (175791)
21445 LAKEFRONT DR
LAGO VISTA TX 78645-6118

TAYLOR JOHN HARVEY (175792)
30610 N HIGH MEADOW CIR
MAGNOLIA TX 77355-3937

STARR JERRY DON & ELIZABETH L (175793)
21441 LAKEFRONT DR
LAGO VISTA TX 78645-6118

PITTS ROBERT D & TRACEY F (175794)
21439 LAKEFRONT DR
LAGO VISTA TX 78645-6118

BERLI AMBER & JOE BERLI (175796)
5017 GREEN SHORE CIR
LAGO VISTA TX 78645-6043

WOLF KYLIE NOEL & GARRETT DAVID BURK (175797)
21433 LAKEFRONT DR
LAGO VISTA TX 78645-6118

DAVIS ERIC & MEGAN DAVIS (175798)
21431 LAKEFRONT DR
LAGO VISTA TX 78645-6118

YIU ANDY ANG (175799)
20805 S RIDGE ST
LAGO VISTA TX 78645-6257

MARKHAM MARK & JO A MARKHAM (175800)
21427 LAKEFRONT DR
LAGO VISTA TX USA 78645-6118

MEDALEAF REAL ESTATE (175801)
4500 NETTLE LN
LAGO VISTA TX 78645-6237

OLSEN GARY & JOYCE (175802)
21423 LAKEFRONT DR
LAGO VISTA TX 78645-6118

MCBRIDE ROBERT JR & JILL (175803)
21421 LAKEFRONT DR
LAGO VISTA TX 78645-6118

DAUGHERTY SCOTT & JOANN LIVING TRUST (175804)
21419 LAKEFRONT DR
LAGO VISTA TX 78645-6118

STUART KELLY D (175806)
4609 RIMROCK DR
LAGO VISTA TX 78645-6144

ZARATE RICHARD C (175807)
914 ARDSLEY LN
BRIDGEWATER NJ 08807-1146

HACKETT MARK (175808)
21108 NATIONAL DR
LAGO VISTA TX 78645-6230

FREELAND STEVEN & LAURA LIFE ESTATE (175809)
21200 NATIONAL DR
LAGO VISTA TX 78645-6232

MAY WILLIAM S (175810)
21202 NATIONAL DR
LAGO VISTA TX 78645-6232

COURADE MICHAEL (175811)
21204 NATIONAL DR
LAGO VISTA TX US 78645-6232

COX BRITTNEY N (175812)
21206 NATIONAL DR
LAGO VISTA TX 78645-6232

PADILLA RICARDO DANIEL (175813)
21208 NATIONAL DR
LAGO VISTA TX 78645-6232

SNYDER FAMILY TRUST (175814)
4403 NETTLE LN
LAGO VISTA TX US 78645-6234

STERNS DUSTIN & RACHEL HERRMAN (175815)
4405 NETTLE LN
LAGO VISTA TX 78645-6234

STERNS DUSTIN & RACHEL HERRMAN (175816)
4405 NETTLE LN
LAGO VISTA TX 78645-6234

GOODWIN FLOYD T & JACKLYN F (175819)
4501 NETTLE LN
LAGO VISTA TX 78645-6219

FOLAND PAM & ANDREA JOHNSON & STACY NUCKOLLS & LINDSAY LEON (175821)
1306 EMERALD RD
LAGO VISTA TX 78645-7811

GARCIA OMAR & EDITA GONZALEZ (175822)
12812 APPALOOSA CHASE DR
AUSTIN TX 78732-1971

WHEELER CHARLES K & BECKY S (175823)
21115 TWISTING TRL
LAGO VISTA TX 78645-6441

GARCIA OMAR & EDITA GONZALEZ (175824)
12812 APPALOOSA CHASE DR
AUSTIN TX 78732-1971

DILDINE RICHARD E REVOCABLE TRUST (175825)
21111 TWISTING TRL
LAGO VISTA TX 78645-6441

WILSON FAMILY TRUST (175826)
12308 BELLA PRATO DR
FORT WORTH TX 76126-1514

NEDRY RONALD CRAIG TRUST (175858)
PO BOX 6101
TEMPLE TX USA 76503-6101

ZALESKI GARY B (175859)
21455 LAKEFRONT DR
LAGO VISTA TX 78645-6121

SMITH NORMA JOY (175860)
21453 LAKEFRONT DR
LAGO VISTA TX 78645-6121

TUCKER BENJAMIN & AIMEE (175861)
21451 LAKEFRONT DR
LAGO VISTA TX 78645-6121

SCHWAUSCH JOHN D & LINDA R (175862)
21449 LAKEFRONT DR
LAGO VISTA TX 78645-6121

SHOEMAKE EDNA ANNE (175865)
3949 OUTPOST TRCE
LAGO VISTA TX US 78645-6244

DEVIGILI ADAMO L (175866)
3951 OUTPOST TRCE
LAGO VISTA TX USA 78645-6244

TUOMALA ADAM & SUSAN GOSEWEHR (175867)
3955 OUTPOST TRCE
LAGO VISTA TX 78645-6244

WICHERT DEAN P (176839)
5406 COUNTRY CLUB DR
LAGO VISTA TX 78645-5860

LIDDELL JUSTIN (176840)
5405 COUNTRY CLUB DR
LAGO VISTA TX 78645-5874

SIQUEIROS JASON (176841)
108 S LYNNWOOD TRL
CEDER PARK TX 78613

KLIMAN LAURALYNDE & MATTHEW GROVE (176842)
5600 ARROWHEAD DR
LAGO VISTA TX 78645-5805

SECOND CHANCE HOLDINGS LLC (176843)
16303 ELM DR
AUSTIN TX 78734-1144

LOU PAMELA W & KEN WONG (176844)
1130 SCOTLAND DR
CUPERTINO CA 95014-5051

CRAFT CLAUDIE EUGENE (176845)
205 SAINT LOUIS ST
FLATONIA TX 78941-5564

NASIF DINA & KHALIL MARAM (176846)
43 LEGEND LN
HOUSTON TX 77024-2408

HATCH GARY MARK & KATHY T (176847)
5406 ARROWHEAD DR
LAGO VISTA TX 78645-5857

O'HARE RUSSELL JAMES & CYNTHIA LEE O'HARE (176848)
5404 ARROWHEAD DR
LAGO VISTA TX 78645-5857

FASANO TIMOTHY CRAIG & VICKI LYNN CANDUSSO (176849)
5402 ARROWHEAD DR
LAGO VISTA TX 78645-5857

ENGLAND MARK D & CYNTHIA A (176850)
5400 ARROWHEAD DR
LAGO VISTA TX 78645-5857

FOREMAN WILLIAM LAWRENCE II (176851)
27316 NE 143RD CT
DUVALL WA 98019-8394

FOREMAN TEXAS PROPERTIES LLC (176852)
27316 NE 143RD CT
DUVALL WA 98019

DMA CONTEMPORARY HOMES LLC (176853)
2520 WALSH TARLTON LN APT 2740
AUSTIN TX 78746-7774

J A Z TRUST (176854)
PO BOX 1584
GALVESTON TX 77553-1584

ASSEMI JULIET ROSE & KENNETH ASSEMI (176855)
5210 ARROWHEAD DR
LAGO VISTA TX 78645

DRAKE BRIAN C & MAUREEN (176856)
5501 COUNTRY CLUB DR
LAGO VISTA TX 78645-5861

BUBENIK RICKY A & SCHOLLEY R (177115)
5404 COUNTRY CLUB DR
LAGO VISTA TX 78645-5860

SMALE DELILAH ANN & DUANE WESLEY SMALE (177116)
5402 COUNTRY CLUB DR
LAGO VISTA TX 78645-5860

BROOKSHIER AULDON DOSS (177117)
20541 HIGHLAND LAKE DR
LAGO VISTA TX 78645-6634

HAMMONDS GENA S & GLORIA (177118)
5308 COUNTRY CLUB DR
LAGO VISTA TX 78645-5831

VILLARREAL GABRIEL L & ANGELICA G (177119)
5306 COUNTRY CLUB DR
LAGO VISTA TX 78645-5831

HANSEN DEBRA ANN (177120)
5304 COUNTRY CLUB DR
LAGO VISTA TX 78645

SMITH BRUCE H & CONSTANCE I (177121)
5302 COUNTRY CLUB DR
LAGO VISTA TX 78645-5831

WILLIAMS PATRICIA S (177123)
5208 COUNTRY CLUB DR
LAGO VISTA TX 78645-6064

TWIN OAKS ESTATES LLC (177124)
10900 TWISTED ELM DR
AUSTIN TX 78726-2369

HOOMANRAD NASIM & NAVID (177125)
PO BOX 4903
AUSTIN TX 78765-4903

CITY OF LAGO VISTA (177126)
PO BOX 4727
LAGO VISTA TX 78645-0008

CITY OF LAGO VISTA (177127)
PO BOX 4727
LAGO VISTA TX 78645-0008

DIXON MARK K & SHELLY K (177130)
5102 COUNTRY CLUB DR
LAGO VISTA TX 78645-6026

SAGER IVAN & DAYLE SAGER (177135)
21104 BLACKFOOT CV
LAGO VISTA TX 78645-6079

HASH ROBERT (177136)
PO BOX 4716
LAGO VISTA TX 78645-0054

POLIKAITIS ARUNAS B & LAURA A (177137)
21105 BLACKFOOT CV
LAGO VISTA TX 78645-6033

GOEBEL JAMES SCOTT (177142)
4904 TURNBACK ST
LAGO VISTA TX 78645-6038

BROWN GREGORY ALLAN (177143)
4902 TURNBACK ST
LAGO VISTA TX 78645-6038

WISER CHARLES & BARBARA (177144)
4900 TURNBACK ST
LAGO VISTA TX 78645-6038

KELLER KARL (177145)
4810 TURNBACK ST
LAGO VISTA TX 78645-6036

CZARNIAK ZENON JR & DIANNA (177146)
7513 TARGET LN NW
ALBUQUERQUE NM 87120-3066

GSJ GROUP LLC (177147)
2205 W PARMER LN # 201
AUSTIN TX 78727-4331

WALLACE DONALD G & LINDA L (177148)
4809 GREEN SHORE CIR
LAGO VISTA TX 78645-6042

MAY SYLVIA GUAJARDO (177149)
4901 GREEN SHORE CIR
LAGO VISTA TX 78645-6042

MAY SYLVIA GUAJARDO (177150)
4901 GREEN SHORE CIR
LAGO VISTA TX 78645-6042

SNYDER DAVID A & HEATHER (177151)
4905 GREEN SHORE CIR
LAGO VISTA TX 78645-6042

TREVINO DALEE D (177152)
8111 JOY RD
VOLENTE TX 78641-9651

LOFTUS MARK & SANDRA (177153)
5001 GREEN SHORE CIR
LAGO VISTA TX 78645-6043

CARTER GINGER L (177154)
20106 TRAVIS DR
JONESTOWN TX 78645-2451

CITY OF LAGO VISTA (177155)
PO BOX 4727
LAGO VISTA TX 78645-0008

CITY OF LAGO VISTA (177156)
PO BOX 4727
LAGO VISTA TX 78645-0008

CITY OF LAGO VISTA (177157)
PO BOX 4727
LAGO VISTA TX 78645-0008

LIVE OAK INVESTMENTS LLC (177159)
2906 QUAIL RUN DR
ROUND ROCK TX USA 78681-1214

TRAVIS COUNTY MUD # 1 (177162)
LAGO VISTA TX
78645

LAGO VISTA PROP OWNERS ASSOC (177163)
PO BOX 4766
LAGO VISTA TX 78645-0008

CITY OF LAGO VISTA (177164)
PO BOX 4727
LAGO VISTA TX 78645-0008

MAGUSIAK ALAN S (177166)
3727 TOP ROCK LN
ROUND ROCK TX 78681-0901

CAMPOS RAMON MONTIEL (177167)
501 E STASSNEY LN APT 817
AUSTIN TX 78745-3392

ADHIKARI ISHWOR & KOMAL POKHAREL (177168)
7504 HARDY DR
AUSTIN TX US 78757-1838

BOGART SCOTT W & REGINA LEAL BOGART (177169)
5003 COUNTRY CLUB DR
LAGO VISTA TX 78645-2219

MBANK AUSTIN N A TRUSTEE (177170)
368 STONERIDGE VLG
MYERSTOWN PA 17067-2210

KOENIG DOYLE W & CHRISTI D RICKS (177171)
5101 COUNTRY CLUB DR
LAGO VISTA TX 78645-6044

KOENIG DOYLE & CHRISTI RICKS (177172)
5101 COUNTRY CLUB DR
LAGO VISTA TX 78645-6044

TUDTUD FELIPE & JOHANNA (177173)
17009 NORTHLAKE HILLS DR
JONESTOWN TX 78645-4479

KEMPF JOHN (177176)
3404 AMERICAN DR APT 2303
LAGO VISTA TX 78645-6547

ALDAWWDI MAHER (177177)
143 ALBATROSS CV
BUDA TX 78610-5046

THIAGARAJAN VENKATESH (177178)
540 CASCADA LN
ROUND ROCK TX USA 78681-1785

VAUGHAN JOE E JR (177179)
PO BOX 34
TEMPLE NH 03084-0034

BREWSTER SALLY (177180)
PO BOX 4982
LAGO VISTA TX 78645-0009

TOLSON WANDA G (177181)
5301 COUNTRY CLUB DR
LAGO VISTA TX 78645-5832

HALCOM FOSTELENE (177182)
5303 COUNTRY CLUB DR
LAGO VISTA TX 78645-5832

MCMAHON GALE A (177183)
5305 COUNTRY CLUB DR
LAGO VISTA TX 78645-5832

WOLF VERA H (177184)
PO BOX 57
ROUND MOUNTAIN TX 78663-0057

MCBRIDE LEONARD STANLEY & VALERIE LYNN (177185)
5401 COUNTRY CLUB DR
LAGO VISTA TX 78645-5874

WILLINGHAM DAVID A & NICHOLE STARR (177187)
5206 ARROWHEAD DR
LAGO VISTA TX 78645-5896

WILLINGHAM DAVID A & NICHOLE STARR (177188)
5206 ARROWHEAD DR
LAGO VISTA TX 78645-5896

WALKER WILLIAM L & KATHLEEN M (177189)
5200 ARROWHEAD DR
LAGO VISTA TX US 78645-5896

WALKER WILLIAM L III & KATHLEEN M (177190)
5200 ARROWHEAD DR
LAGO VISTA TX 78645-5896

NICHOLS DAVID M (177191)
5108 ARROWHEAD DR
LAGO VISTA TX 78645-6005

BECKCOM CHRISTOPHER & ROSANNE (177192)
5106 ARROWHEAD DR
LAGO VISTA TX 78645-6005

PELTIER DENNIS J & NANCY L (177193)
5104 ARROWHEAD DR
LAGO VISTA TX 78645-6005

YIU JOSEPH & VIRGINIA YIU (177194)
5102 ARROWHEAD DR
LAGO VISTA TX 78645-6005

WILSON LIVING TRUST (177195)
5100 ARROWHEAD DR
LAGO VISTA TX US 78645-6005

PETROSS TERESA CATHLEEN (177196)
5004 ARROWHEAD DR
LAGO VISTA TX USA 78645-6084

VISTA ESTATES LLC (177197)
4558 CAPE CHARLES DR
PLANO TX 75024-7342

THOMPSON JAMES L III (177221)
PO BOX 10796
AUSTIN TX 78766-1796

HEIDER GENE M (177222)
21403 LAKEFRONT DR
LAGO VISTA TX 78645-6116

HART STEPHEN P & VIOLET E HART (177225)
21561 LAKEFRONT DR
LAGO VISTA TX 78645-6128

HOVAS JOHN P & DIANE (177226)
PO BOX 429
PATTISON TX 77466-0429

EEDS GEORGE R & SUSAN M (177227)
21557 LAKEFRONT DR
LAGO VISTA TX 78645-6128

VAN DEN BERG TANIA & DANIL J H (178146)
51 S BUTCH ARTHUR RD
CLEVELAND TX US 77328-7821

CARMEN'S MARFA HOLDING LLC (178147)
1101 THE HIGH RD
AUSTIN TX 78746-2226

CARMENS MARFA HOLDINGS LLC (178148)
1101 THE HIGH RD
AUSTIN TX 78746-2226

ALSULTANI BASHAR T ETAL (178149)
12405 ALAMEDA TRACE CIR
AUSTIN TX 78727-6441

AREZEHGAR SHAESTEH (178150)
2703 GREENLEE DR
AUSTIN TX 78703-1611

GOODWIN FLOYD T & JACKLYN F (361064)
4501 NETTLE LN
LAGO VISTA TX 78645-6219

DONNELLAN BERNIECE ELAINE (424624)
3947 OUTPOST TRCE
LAGO VISTA TX 78645-6244

CITY OF LAGO VISTA (424762)
PO BOX 4727
LAGO VISTA TX 78645-0008

TEXAS LONESTAR DIAMOND LLC (458291)
1131 W 18TH ST
HOUSTON TX 77008-3340

CITY OF LAGO VISTA (458378)
PO BOX 4727
LAGO VISTA TX 78645-0008

RAGAZZO MARIA EVE & RAFAEL RAGAZZO (475820)
20569 HIGHLAND LAKE DR
LAGO VISTA TX US 78645-6634

ASSEMI JULIET ROSE & KENNETH ASSEMI (475821)
5210 ARROWHEAD DR
LAGO VISTA TX 78645

TASSIN MARK R & GENEVA TAYLOR TASSIN (543303)
4088 OUTPOST TRACE
LAGO VISTA TX 78645-6462

CITY OF LAGO VISTA (565789)
PO BOX 4727
LAGO VISTA TX 78645-0008

CITY OF LAGO VISTA (565788)
PO BOX 4727
LAGO VISTA TX 78645-0008

CITY OF LAGO VISTA (565894)
PO BOX 4727
LAGO VISTA TX 78645-0008

DARK STEPHEN & CHELSEA DARK (565898)
1301 GREENFIELD DR
CEDAR PARK TX USA 78613-5805

CITY OF LAGO VISTA (565985)
PO BOX 4727
LAGO VISTA TX 78645-0008

CITY OF LAGO VISTA (566202)
PO BOX 4727
LAGO VISTA TX 78645-0008

CITY OF LAGO VISTA (566203)
PO BOX 4727
LAGO VISTA TX 78645-0008

CITY OF LAGO VISTA (566295)
PO BOX 4727
LAGO VISTA TX 78645-0008

CANYON OAKS HOMEOWNERS ASSOCIATION INC (727354)
5204 CANYON OAKS DR
LAGO VISTA TX 78645-6089

CANYON OAKS HOMEOWNERS ASSOCIATION INC (727355)
5204 CANYON OAKS DR
LAGO VISTA TX 78645-6089

CANYON OAKS HOMEOWNERS ASSOCIATION INC (727356)
5204 CANYON OAKS DR
LAGO VISTA TX 78645-6089

CANYON OAKS HOMEOWNERS ASSOCIATION INC (727357)
5204 CANYON OAKS DR
LAGO VISTA TX 78645-6089

CANYON OAKS HOMEOWNERS ASSOCIATION INC (727358)
5204 CANYON OAKS DR
LAGO VISTA TX 78645-6089

CANYON OAKS HOMEOWNERS ASSOCIATION INC (727359)
5204 CANYON OAKS DR
LAGO VISTA TX 78645-6089

DHANANJAYAM SELVAPATHI & VIJAYALAKSHMI MOHANAN (755076)
9508 LISI ANNE DR
AUSTIN TX 78717-3883

MCCARTY RANDAL F & MARY L (784571)
20903 TOMAHAWK ST
LAGO VISTA TX 78645-6050

SAVAGE BARRY & KATHRYN KELLEY (796836)
4064 OUTPOST TRCE
LAGO VISTA TX 78645-6456

BLOMQUIST FAMILY REVOCABLE LIVING (806873)
4082 OUTPOST TRCE
LAGO VISTA TX 78645-6462

HOOD CHRISTOPHER & KRISSY (819817)
4133 ROCKWOOD
LAGO VISTA TX 78645-6430

BAYER GERALD FREDERICK & MARSHA NELL LIVING TRUST (840893)
4705 NAVAJO CV
LAGO VISTA TX 78645-6062

SMITH ROBIN A (846530)
21007 TWISTING TRAIL
LAGO VISTA TX 78645-6440

BUTLER DAVID A & JANICE (894637)
4008 ROCKWOOD DR
LAGO VISTA TX 78645-6426

HOLOUBEK JOHN C & ELIZABETH D (909323)
20801 GREENPARK DR
LAGO VISTA TX 78645-2378

ROHNE DEAN M & JENNIFER L (911504)
21461 LAKEFRONT DR
LAGO VISTA TX 78645-6121

RAY DENNIS MATTHEW & LETITIA ANN (921561)
21657 HIGH DRIVE
LAGO VISTA TX USA 78645-6512

ELLIOTT MICHAEL & BRENDA (946336)
21001 GREENPARK DR
LAGO VISTA TX 78645-6401

JONES ROBERT ANWELL (950698)
5105 COUNTRY CLUB DR
LAGO VISTA TX US 78645-6044

MONACO STEVEN (967444)
20803 GREENPARK DR
LAGO VISTA TX USA 78645-2378

MACKAY STUART & JUDY MACKAY (967860)
4129 ROCKWOOD DR
LAGO VISTA TX 78645-6430

RANICK RONALD (967948)
5104 COUNTRY CLUB DR
LAGO VISTA TX 78645-6026

BLU OCEAN DEVELOPMENT CORPORATION (968096)
PO BOX 4954
LAGO VISTA TX 78645-0009

WHEATLEY KRISTEN G & GREG G (968689)
21101 GREENPARK DR
LAGO VISTA TX 78645-6423

WHEELER JENNIFER (175479)
4800 TURNBACK ST
LAGO VISTA TX 78645-6037

()

()

()

()

()

()

()

()

()

()

()

()

()

()

()

()

()

()

()

()

()

()

()

()

()

()

()

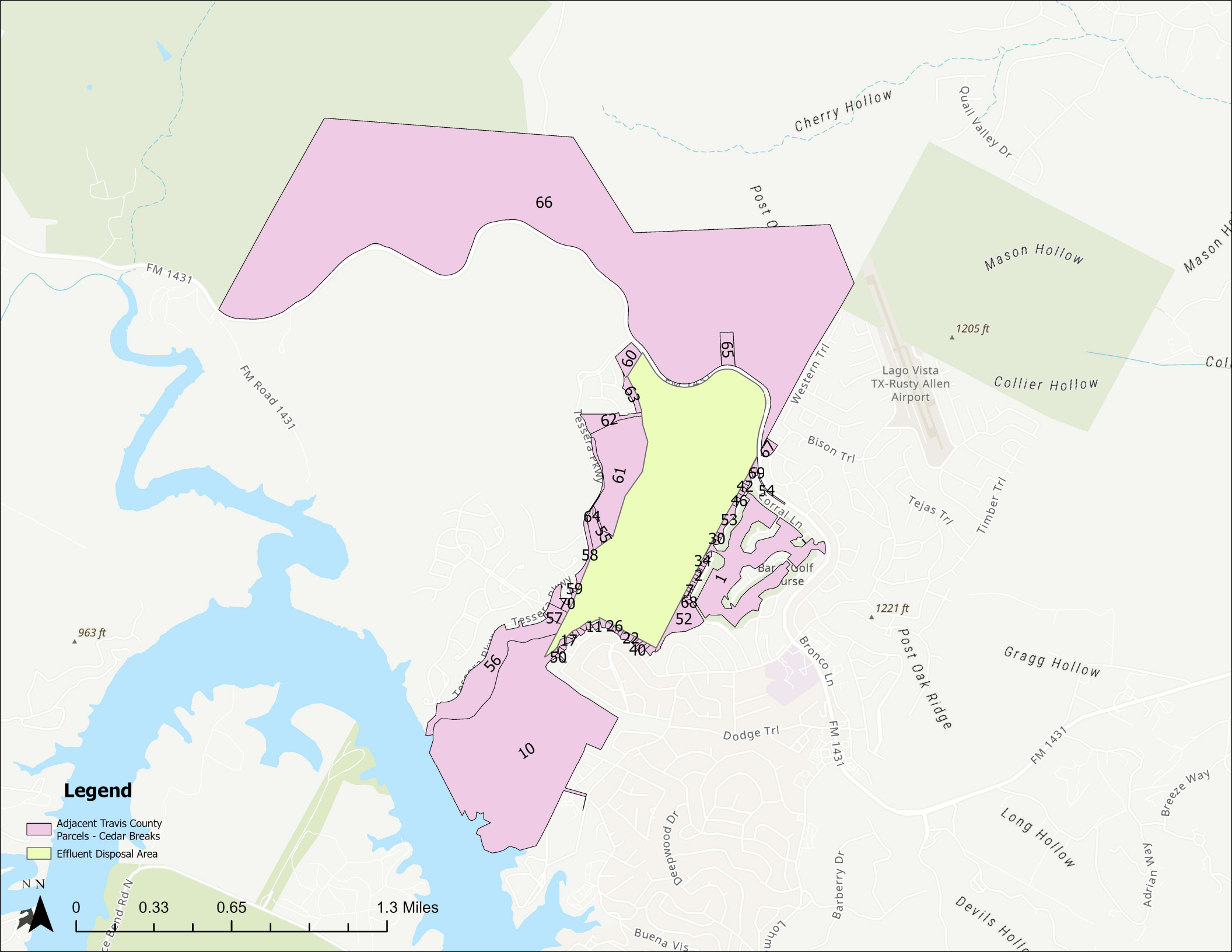
Legend
Adjacent Travis County Parcels - Cedar Breaks
Effluent Disposal Area
N
0
0.33
0.65
1.3 Miles
FM 1431
FM Road 1431
Cherry Hollow
Quail Valley Dr
Mason Hollow
Collier Hollow
1205 ft
Lago Vista TX-Rusty Allen Airport
Western Trl
Bison Trl
Tejas Trl
Timber Trl
Coral Ln
Tessera Pkwy
Bronco Ln
Dodge Trl
Post Oak Ridge
1221 ft
963 ft
Gragg Hollow
Long Hollow
Deepwood Dr
Barberry Dr
Adrian Way
Breeze Way
Devils Hollow
Buena Vis
66
65
60
63
62
61
64
55
58
59
70
57
56
50
17
11
26
22
40
10
67
69
42
54
46
53
30
34
1
68
52

Legend
Adjacent Travis County Parcels - Cedar Breaks
Effluent Disposal Area
N
0
0.1
0.2
0.4 Miles
Tessera Pkwy
Red Bottle Brg
FM 1431
Western Trl
Post Oak Ridge
Bar K Ranch Rd
Corral Ln
Cedar Glen Cv
Burnet Knoll Trl
Golf Course
Chestnut Cv
Foothill Cv
Sierra Trl
Lago Vista Middle School
1221
60
65
66
63
62
67
61
64
55
54
37
69
49
42
44
45
46
47
53
29
30
31
33
32
34
36
2
48
4
3
5
6
1
8
9
68
52
59
58
70
57
56
12
28
11
27
26
25
23
22
20
21
40
39
38
15
13
14
16
17
19
18
50

Legend
Adjacent Travis County Parcels - Cedar Breaks
Effluent Disposal Area
905 ft
Tessera Pkwy
Spiny Acanthus Ln
Purple Aster Pass
Cross Timbers Bnd
Tessera Pkwy
t Knoll Trl
Sierra Trl
Foothill Cv
901 ft
FM 1431
Buffalo T
Corral Ln
Cedar Glen Cv
Cactus Bend Cv
Clearwater Cv
Chestnut Cv
Chantilly Trl
FM 1431
1
10
11
12
13
14
15
16
17
18
19
20
21
22
23
24
25
26
27
28
29
30
31
32
33
34
35
36
37
38
39
40
41
42
43
44
45
46
47
48
49
50
52
53
54
55
56
57
58
59
61
64
68
69
70
N
0
0.05
0.1
0.2 Miles

OBJECTID	Property ID	Physical Address	Physical Owner Name	Physical Owner Address
1	182951	8116 CHESTNUT CV	GOLDTREE LAND INVESTMENTS LLC	PO BOX 1878 LAMPASAS TX 76550-0041
2	183124	8116 FOOTHILL CV	GGEBARA PROPERTIES LLC	6303 OASIS DR AUSTIN TX USA 78749-1877
3	183125	8114 FOOTHILL CV	GGEBARA PROPERTIES LLC	6303 OASIS DR AUSTIN TX USA 78749-1877
4	183126	8112 FOOTHILL CV	GGEBARA PROPERTIES LLC	6303 OASIS DR AUSTIN TX USA 78749-1877
5	183127	8110 FOOTHILL CV	GGEBARA PROPERTIES LLC	6303 OASIS DR AUSTIN TX USA 78749-1877
6	183128	8108 FOOTHILL CV	TRAVISTIN PROPERTIES LP	PO BOX 4760 LAGO VISTA TX USA 78645-0008
7	183129	8106 FOOTHILL CV	TRAVISTIN PROPERTIES LP	PO BOX 4760 LAGO VISTA TX USA 78645-0008
8	183130	8104 FOOTHILL CV	TRAVISTIN PROPERTIES LP	PO BOX 4760 LAGO VISTA TX USA 78645-0008
9	183131	8102 FOOTHILL CV	CITY OF LAGO VISTA	PO BOX 4727 LAGO VISTA TX 78645-0008
10	182307	F M RD 1431	TURNBACK DEVELOPMENT LLC	10 INVERNESS DR E STE 250 ENGLEWOOD CO 80112-5612
11	183174	21917 SURREY LN	SENTER GREGORY S & TONYA B	2205 FIRST VW LEANDER TX 78641-8849
12	183176	21902 STIRRUP CV	LATRAN JUDITH A	2953 LOVERS LN INGLESIDE TX 78362-4029
13	183177	21905 STIRRUP CV	SHARMA LIVING TRUST	5002 PINERIDGE DR SUGAR LAND TX 77479-4210
14	183178	21903 STIRUP CV	MUSFELDT ALICE MERRYMAN	21903 STIRUP CV LAGO VISTA TX 78645-4327
15	183181	21902 SOMBRERO CV	BOZYK ALICIA MARIE	10300 WOMMACK RD AUSTIN TX 78748-1349
16	183182	21904 SOMBRERO CV	BOZYK ALICIA MARIE	10300 WOMMACK RD AUSTIN TX 78748-1349
17	183183	21903 SOMBRERO CV	KASPAR MICHAEL	21909 SURREY LN LAGO VISTA TX 78645-4340
18	183187	21904 STETSON CV	KASPAR MICHAEL	21909 SURREY LN LAGO VISTA TX 78645-4340
19	183188	21905 STETSON CV	VILLARREAL ROBERTO IVAN & TERESA VILLARREAL	3606 TWIN BRANCH DR CEDAR PARK TX 78613-7495
20	183195	21700 SIERRA TRL	PATTON JOYCE	21700 SIERRA TRL LAGO VISTA TX 78645-4317
21	183196	21702 SIERRA TRL	PRICE FAMILY TRUST	21704 SIERRA TRL LAGO VISTA TX 78645-4317
22	183197	21704 SIERRA TRL	PRICE FAMILY TRUST	21704 SIERRA TRL LAGO VISTA TX 78645-4317
23	183199	21708 SIERRA TRL	GLASS CHRISTINE ELIZABETH, WILLIAM	21708 SIERRA TRL LAGO VISTA TX 78645-4317
24	183200	21929 SURREY LN	PAUL RAJESH	17402 CRAZY ARM RD ROUND ROCK TX USA 78664-2094
25	183201	21927 SURREY LN	TRANKAROFF PETER & BLAGA TRANKAROFF	10600 LOCKERBIE DR AUSTIN TX 78750-4034
26	183202	21925 SURREY LN	COPELAND TERESA	109 MESA TRL LEANDER TX USA 78641-8934
27	183204	21921 SURREY LN	STOKES DANIEL	21921 SURREY LN LAGO VISTA TX 78645-4340
28	183205	21919 SURREY LN	NRC INC % GARY MCWILLIAMS	30234 FAIRWAY RUN FAIR OAKS RANCH TX 78015-4487
29	184019	8206 CEDAR GLEN CV	BENTLEY KIMBERLY & LANE	445 VENTURE BLVD S LAGO VISTA TX 78645-8508
30	184020	8204 CEDAR GLEN CV	RASHID SAMER ASAAD	8204 CEDAR GLEN CV LAGO VISTA TX 78645
31	184021	8202 CEDAR GLEN CV	PEPE JOSEPH F	3701 RED BIRD TRL LAGO VISTA TX 78645-9748
32	184044	8128 FOOTHILL CV	CITY OF LAGO VISTA	PO BOX 4727 LAGO VISTA TX 78645-0008
33	184045	8126 FOOTHILL CV	APEX CONTRACTING GROUP	1200 WEST AVE APT 724 MIAMI BEACH FL 33139-4316
34	184046	8124 FOOTHILL CV	HEGBERG STAN	7016 BUCCANEER TRL AUSTIN TX 78729-7840
35	184047	8122 FOOTHILL CV	CITY OF LAGO VISTA	PO BOX 4727 LAGO VISTA TX 78645-0008
36	184048	8120 FOOTHILL CV	HEGBERG STAN	7016 BUCCANEER TRL AUSTIN TX 78729-7840
37	185083	8457 CORRAL LN	MAREDIA MUNAF	4213 GALLEGO CIR AUSTIN TX 78738-7013
38	425151	21502 SIDEWINDER CV	URTADO MICHAEL R & MONIQUE	21502 SIDEWINDER CV LAGO VISTA TX 78645-4343
39	458731	21604 SIERRA TRL	URTADO MICHAEL R & MONIQUE	21502 SIDEWINDER CV LAGO VISTA TX 78645-4343
40	458732	21606 SIERRA TRL	TRAVIS COUNTY TRUSTEE	1648 BAYLAND ST ROUND ROCK TX US 78664-3746
41	459008	8408 CEDAR GLEN CV	JAIME RICARDO A CRUZ & ARACELI CHAVEZ HERNANDEZ	3117 HASKIN RIDGE LN PFLUGERVILLE TX 78660-6348
42	459009	8406 CEDAR GLEN CV	VAVADIVA JIGNESH	4400 PASADA LANE ROUND ROCK TX US 78681-1683
43	459010	8404 CEDAR GLEN CV	SUNIURA JUCIENE & ITAMAR	7716 TURNBACK LEDGE TRL LAGO VISTA TX 78645-4826

44	459011	8402 CEDAR GLEN CV	SUNIURA JUCIENE & ITAMAR	7716 TURNBACK LEDGE TRL LAGO VISTA TX 78645-4826
45	459012	8400 CEDAR GLEN CV	SUNIURA JACIENE ANDRADE &	7716 TURNBACK LEDGE TRL LAGO VISTA TX 78645-4826
46	459013	8314 CEDAR GLEN CV	NAGAIAH BALASUBRAMANIAN	715 TRAILSIDE BND ROUND ROCK TX 78665-2115
47	459014	8312 CEDAR GLEN CV	EQUITY TRUST COMPANY CUSTODIAN FBO	6703 WINTON ST HOUSTON TX USA 77021-2428
48	459021	8118 FOOTHILL CV	CANDELARIA MURRAY & AL & CAN LLC	PO BOX 633 KYLE TX 78640-0633
49	459205	8452 CORRAL LN	VORPAHL MATTHEW & SHANNON GRIBBLE	7708 DIAMOND TRL LAGO VISTA TX US 78645-4416
50	498835	SURREY LN	CITY OF LAGO VISTA	PO BOX 4727 LAGO VISTA TX 78645-0008
52	566666	FOOTHILL CV	CITY OF LAGO VISTA	PO BOX 4727 LAGO VISTA TX 78645-0008
53	566677	CEDAR GLEN CV	CITY OF LAGO VISTA	PO BOX 4727 LAGO VISTA TX 78645-0008
54	566684	F M RD 1432	CITY OF LAGO VISTA	PO BOX 4727 LAGO VISTA TX 78645-0008
55	843633	TESSERA PKWY	HINES LAKE TRAVIS LAND II LTD PRTNRSP	100 CONGRESS AVE STE #1900 AUSTIN TX 78701-4072
56	842290	TESSERA PKWY	HINES LAKE TRAVIS LAND II LTD PRTNRSP	100 CONGRESS AVE STE #1900 AUSTIN TX 78701-4072
57	842299	TESSERA PKWY	CITY OF LAGO VISTA	PO BOX 4727 LAGO VISTA TX 78645-0008
58	842300	TESSERA PKWY	HINES LAKE TRAVIS LAND II LTD PRTNRSP	811 MAIN STE 4100 HOUSTON TX 77002-6125
59	842324	22016 CROSS TIMBERS BND	WALBESSER JAMES & GISELE GONZALEZ-MUNOZ	22016 CROSS TIMBERS BND LAGO VISTA TX 78645-4813
60	842393	TESSERA PKWY	HINES LAKE TRAVIS LAND II LTD PRTNRSP	100 CONGRESS AVE STE #1900 AUSTIN TX 78701-4072
61	902475	TESSERA PKWY	HINES LAKE TRAVIS LAND II LP	2800 POST OAK BLVD STE 4800 HOUSTON TX US 77056-6123
62	921454	TESSERA PKWY	HINES LAKE TRAVIS LAND II LIMITED PARTNERSHIP	515 CONGRESS STE 1950 AUSTIN TX 78701-3524
63	973458	RED BOTTLE BRUSH RD	HINES LAKE TRAVIS LAND II LIMITED PARTNERSHIP	515 CONGRESS STE 1950 AUSTIN TX 78701-3524
64	973507	TESSERA PKWY	HINES LAKE TRAVIS LAND II LP	2800 POST OAK BLVD STE 4800 HOUSTON TX US 77056-6123
65	186695	21900 F M RD 1431	CHRIST OUR SAVIOR LUTHERAN CHURCH	PO BOX 4973 LAGO VISTA TX 78645-0009
66	368528	F M RD 1431	US FISH & WILDLIFE SERVICE	PO BOX 1306 ALBUQUERQUE NM 87103-1306
67	185147	WILDWOOD CV	LAVERNE DEVELOPERS LLC	10205 TULAROSA PASS AUSTIN TX 78726-2463
68	183132	8100 FOOTHILL CV	JENKINS MAYRE MERCEDES	193 SHADY ACRES CIR NIXA MO USA 65714-7978
69	185082	8455 CORRAL LN	TAMBURRI MITCHELL SEAN	5005 MCCORMICK MOUNTAIN DR AUSTIN TX US 78734-1811
70	842323	22001 CROSS TIMBERS BND	TIEMEIER DENNIS & BARBARA	22001 CROSS TIMBERS BND LAGO VISTA TX 78645-4813

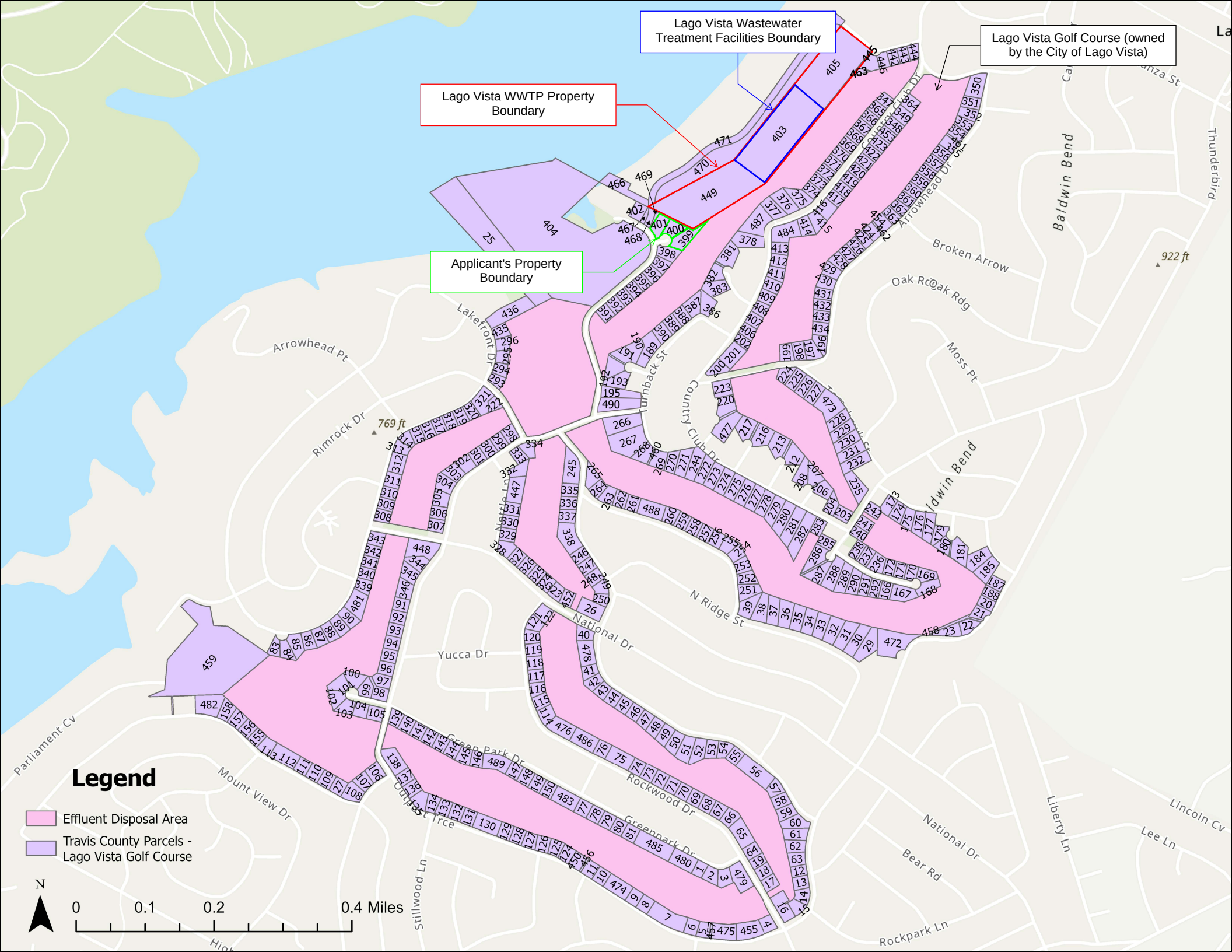
Lago Vista Wastewater Treatment Facilities Boundary
Lago Vista Golf Course (owned by the City of Lago Vista)
Lago Vista WWTP Property Boundary
Applicant's Property Boundary
Legend
Effluent Disposal Area
Travis County Parcels - Lago Vista Golf Course
N
0
0.1
0.2
0.4 Miles
Arrowhead Pt
Rimrock Dr
Lakefront Dr
Turnback St
Country Club Dr
Broken Arrow
Oak Rdg
Moss Pt
Baldwin Bend
Thunderbird
Arrowhead Dr
N Ridge St
National Dr
Yucca Dr
Rockwood Dr
Greenpark Dr
Parliament Cv
Mount View Dr
Stillwood Ln
Bear Rd
Liberty Ln
Lincoln Cv
Lee Ln
Rockpark Ln
769 ft
922 ft

Object ID	Property ID	Physical Address	Owner Name	Owner Address	Hyperlink
1	169591	20707 GREENPARK DR	SRIYA PROPERTIES LLC	20707 GREENPARK DR LAGO VISTA TX 78645-6469	https://stage.travis.prodigycad.com/property-detail/169591
2	169592	20705 GREENPARK DR	WIEDERKEHR ERIN NICOLE & MATTHEW DAVID BURNELL	20705 GREENPARK DR LAGO VISTA TX 78645-6469	https://stage.travis.prodigycad.com/property-detail/169592
3	169593	20703 GREENPARK DR	BUTLER DAVID A & JANICE	4008 ROCKWOOD DR LAGO VISTA TX 78645-6426	https://stage.travis.prodigycad.com/property-detail/169593
4	169596	4090 OUTPOST TRCE	TASSIN MARK R & GENEVA T	4088 OUTPOST TRCE LAGO VISTA TX 78645-6462	https://stage.travis.prodigycad.com/property-detail/169596
5	169601	4078 OUTPOST TRCE	SKINNER HENRY & CANDACE	4078 OUTPOST TRCE LAGO VISTA TX 78645-6462	https://stage.travis.prodigycad.com/property-detail/169601
6	169602	4076 OUTPOST TRCE	LIEBEL FAITH ANNE & STEPHEN RAY LIEBEL	4076 OUTPOST TRCE LAGO VISTA TX USA 78645-6462	https://stage.travis.prodigycad.com/property-detail/169602
7	169605	4070 OUTPOST TRCE	VELASCO AFIF ANTONIO	4070 OUTPOST TRCE LAGO VISTA TX 78645-6462	https://stage.travis.prodigycad.com/property-detail/169605
8	169606	4068 OUTPOST TRCE	MCNEW SCOTT R	4068 OUTPOST TRCE LAGO VISTA TX 78645-6456	https://stage.travis.prodigycad.com/property-detail/169606
9	169607	4066 OUTPOST TRACE	CUNNINGHAM JEFFREY D & ANGELA MARIE MORRIS	4066 OUTPOST TRACE LAGO VISTA TX 78645	https://stage.travis.prodigycad.com/property-detail/169607
10	169610	4060 OUTPOST TRCE	PHAM JOSEPH QUAN & LEANN NGOC LOAN DANG	4060 OUTPOST TRCE LAGO VISTA TX USA 78645-6456	https://stage.travis.prodigycad.com/property-detail/169610
11	169611	4058 OUTPOST TRCE	PACIFICA REAL ESTATE MANAGEMENT LLC	12821 HEINEMANN DR AUSTIN TX 78727-6917	https://stage.travis.prodigycad.com/property-detail/169611
12	169613	4100 OUTPOST TRCE	CURRY LYNDAL LEE & JALINDA WILSON CURRY	1004 FOUNTAINWOOD DR GEORGETOWN TX 78633-1906	https://stage.travis.prodigycad.com/property-detail/169613
13	169614	4098 OUTPOST TRCE	PARKHOUSE TUCKER & VERONICA C NWAHIRI	4098 OUTPOST TRCE LAGO VISTA TX 78645-6462	https://stage.travis.prodigycad.com/property-detail/169614
14	169615	4096 OUTPOST TRCE	RICHERSON TAMARA LYNN ETAL	3530 COUNTY ROAD 341 MCKINNEY TX 75071-0536	https://stage.travis.prodigycad.com/property-detail/169615
15	169616	4094 OUTPOST TRCE	RICHERSON TAMARA LYNN ETAL	3530 COUNTY ROAD 341 MCKINNEY TX 75071-0536	https://stage.travis.prodigycad.com/property-detail/169616
16	169617	4001 ROCKWOOD DR	LYNCH SAMUEL E & KATHY KAY	4001 ROCKWOOD DR LAGO VISTA TX USA 78645-6427	https://stage.travis.prodigycad.com/property-detail/169617
17	169619	4007 ROCKWOOD DR	SAARE LLC - LLC 4007 ROCKWOOD DRIVE PS	4007 ROCKWOOD DR LAGO VISTA TX 78645-6427	https://stage.travis.prodigycad.com/property-detail/169619
18	169620	4009 ROCKWOOD DR	HUEY JULIE MANN & ALVIN HONG	4009 ROCKWOOD DR LAGO VISTA TX 78645-6427	https://stage.travis.prodigycad.com/property-detail/169620
19	169621	4011 ROCKWOOD DR	MARTIN BRENDA FAYE	4011 ROCKWOOD DR LAGO VISTA TX US 78645-6427	https://stage.travis.prodigycad.com/property-detail/169621
20	173109	4700 OUTPOST TRCE	WHITE JAY WALLACE	4700 OUTPOST TRCE LAGO VISTA TX 78645-6340	https://stage.travis.prodigycad.com/property-detail/173109
21	173110	4612 OUTPOST TRCE	WHITE JAY WALLACE	4700 OUTPOST TRCE LAGO VISTA TX 78645-6340	https://stage.travis.prodigycad.com/property-detail/173110
22	173111	4606 OUTPOST TRCE	BOYNE BARBARA	4606 OUTPOST TRCE LAGO VISTA TX 78645-6340	https://stage.travis.prodigycad.com/property-detail/173111
23	173112	4600 OUTPOST TRCE	KAY COUNTY WELL 2 LLC	7514 GIRARD AVE STE 1739 LA JOLLA CA 92037-5149	https://stage.travis.prodigycad.com/property-detail/173112
25	171356	21403 LAKEFRONT DR	HEIDER GENE M	21403 LAKEFRONT DR LAGO VISTA TX 78645-6116	https://stage.travis.prodigycad.com/property-detail/171356
26	173304	21102 NATIONAL DR	MCNIECE ROBERT G	PO BOX 4853 LAGO VISTA TX US 78645-0015	https://stage.travis.prodigycad.com/property-detail/173304
27	173579	21679 HIGH DR	ANBRU LLC	18 SUNSET TRL SUNSET VALLEY TX 78745-2615	https://stage.travis.prodigycad.com/property-detail/173579
29	173385	20708 NORTH RIDGE ST	COTTER BRYAN & CLAUDIA E LEAL	2018 LAKELINE OAKS DR CEDAR PARK TX 78613-5004	https://stage.travis.prodigycad.com/property-detail/173385
30	173386	20710 NORTH RIDGE ST	TAYLOR FAMILY PROPERTIES LLC	PO BOX 651 CALDWELL TX 77836-0651	https://stage.travis.prodigycad.com/property-detail/173386
31	173387	20712 NORTH RIDGE ST	SAHS HOLDINGS LLC	2597 DEARBORN DR LOS ANGELES CA 90068-2239	https://stage.travis.prodigycad.com/property-detail/173387
32	173388	20714 NORTH RIDGE ST	A & TIP AIR CONDITIONING LLC	PO BOX 151761 AUSTIN TX 78715-1761	https://stage.travis.prodigycad.com/property-detail/173388
33	173389	20716 NORTH RIDGE ST	ALVAREZ ANDREW & KIM ELSHOT	2902 NEWBURYPORT AVE GARLAND TX 75044-2114	https://stage.travis.prodigycad.com/property-detail/173389
34	173390	20718 NORTH RIDGE ST	ALVAREZ ANDREW & KIM ELSHOT	2902 NEWBURYPORT AVE GARLAND TX 75044-2114	https://stage.travis.prodigycad.com/property-detail/173390
35	173391	20800 NORTH RIDGE ST	OLIVAS ROBERT E & SHIRLEY R	17913 CRYSTAL CV JONESTOWN TX 78645-4429	https://stage.travis.prodigycad.com/property-detail/173391
36	173392	20802 N RIDGE ST	HUNTER CATHY J & CLARENCE SUMNER HUNTER	20802 N RIDGE ST LAGO VISTA TX 78645-6204	https://stage.travis.prodigycad.com/property-detail/173392
37	173393	20804 N RIDGE ST	CHATHAM SANDRA E	20804 N RIDGE ST LAGO VISTA TX 78645-6204	https://stage.travis.prodigycad.com/property-detail/173393
38	173394	20806 NORTH RIDGE ST	GIBSON JOANNA	2016 SPYGLASS HL LEANDER TX USA 78641-8850	https://stage.travis.prodigycad.com/property-detail/173394
39	173395	20808 NORTH RIDGE ST	GIBSON JOANNA	2016 SPYGLASS HL LEANDER TX USA 78641-8850	https://stage.travis.prodigycad.com/property-detail/173395
40	173429	21011 TWISTING TRL	DROBOT SPENCER LUKE	21011 TWISTING TRL LAGO VISTA TX 78645-6440	https://stage.travis.prodigycad.com/property-detail/173429
41	173432	21005 TWISTING TRL	GRUNAU SHIRLEY R	21005 TWISTING TRL LAGO VISTA TX 78645-6440	https://stage.travis.prodigycad.com/property-detail/173432
42	173433	21003 TWISTING TRL	TWISTING TRAIL PROPERTIES LLC	21003 TWISTING TRL LAGO VISTA TX 78645-6440	https://stage.travis.prodigycad.com/property-detail/173433
43	173434	21001 TWISTING TRL	ASHAR KUNAL & GAYATRI VASAN	21001 TWISTING TRL LAGO VISTA TX 78645-6440	https://stage.travis.prodigycad.com/property-detail/173434
44	173435	20909 TWISTING TRL	SWART HELEN RUTH & DON B BURROWS	20909 TWISTING TRL LAGO VISTA TX USA 78645-6418	https://stage.travis.prodigycad.com/property-detail/173435
45	173436	20907 TWISTING TRL	HOUGHTON BETTY J	20907 TWISTING TRL LAGO VISTA TX US 78645-6418	https://stage.travis.prodigycad.com/property-detail/173436
46	173437	20905 TWISTING TRL	TWISTING TRAILS PROPERTIES LLC	1918 AMERICAN DR LAGO VISTA TX 78645-7804	https://stage.travis.prodigycad.com/property-detail/173437
47	173438	20903 TWISTING TRL	TWISTING TRAILS PROPERTIES LLC	1918 AMERICAN DR LAGO VISTA TX 78645-7804	https://stage.travis.prodigycad.com/property-detail/173438
48	173439	20901 TWISTING TRL	BLOCK ANDREW MICHAEL & VERNA MARIE	6403 LOHMANS FORD RD LAGO VISTA TX 78645-5115	https://stage.travis.prodigycad.com/property-detail/173439
49	173440	20815 TWISTING TRL	VILASANA URIEL	1201 HIGH CHAPARRAL DR LEANDER TX 78641-3610	https://stage.travis.prodigycad.com/property-detail/173440
50	173441	20813 TWISTING TRL	COWAN WYATT & FREDRICK COWAN	20813 TWISTING TRL LAGO VISTA TX 78645-6438	https://stage.travis.prodigycad.com/property-detail/173441
51	173442	20811 TWISTING TRL	LOPEZ DAVID	20811 TWISTING TRL LAGO VISTA TX US 78645-6438	https://stage.travis.prodigycad.com/property-detail/173442
52	173443	20809 TWISTING TRL	LEAFGREEN RICHARD G & SANDRA K	26 OAKS PL LAGO VISTA TX 78645-6978	https://stage.travis.prodigycad.com/property-detail/173443
53	173444	20807 TWISTING TRL	LEAFGREEN RICHARD G & SANDRA K	26 OAKS PL LAGO VISTA TX 78645-6978	https://stage.travis.prodigycad.com/property-detail/173444
54	173445	20805 TWISTING TRL	MCADAMS ROBERT L JR & APRIL M	20805 TWISTING TRL LAGO VISTA TX USA 78645-6438	https://stage.travis.prodigycad.com/property-detail/173445
55	173446	20803 TWISTING TRL	BROWN HELEN W & WILLIAM G	20703 TWISTING TRL LAGO VISTA TX 78645-6436	https://stage.travis.prodigycad.com/property-detail/173446
56	173448	20703 TWISTING TRL	BROWN WILLIAM G & HELEN W	20703 TWISTING TRL LAGO VISTA TX 78645-6436	https://stage.travis.prodigycad.com/property-detail/173448
57	173450	20607 TWISTING TRL	WYLIE A ELEANOR & HELEN BROWN	20703 TWISTING TRL LAGO VISTA TX 78645-6436	https://stage.travis.prodigycad.com/property-detail/173450
58	173451	20605 TWISTING TRL	STRICKER SUSAN L	20605 TWISTING TRL LAGO VISTA TX 78645-6408	https://stage.travis.prodigycad.com/property-detail/173451
59	173452	20603 TWISTING TRL	STRICKER SUSAN L	20605 TWISTING TRL LAGO VISTA TX 78645-6408	https://stage.travis.prodigycad.com/property-detail/173452
60	173453	20601 TWISTING TRL	BLAND SUZANNE	20601 TWISTING TRL LAGO VISTA TX 78645-6408	https://stage.travis.prodigycad.com/property-detail/173453
61	173454	4106 OUTPOST TRACE	BRUNET MANUEL J	5705 POOL CANYON CV AUSTIN TX 78734-1344	https://stage.travis.prodigycad.com/property-detail/173454
62	173455	4104 OUTPOST TRACE	LIVE OAK INVESTMENTS LLC	2906 QUAIL RUN DR ROUND ROCK TX USA 78681-1214	https://stage.travis.prodigycad.com/property-detail/173455

63	173456	4102 OUTPOST TRCE	MASSEY TODD & JILL SUZANNE MOEDER	4102 OUTPOST TRCE LAGO VISTA TX 78645-6413	https://stage.travis.prodigycad.com/property-detail/173456
64	173457	4013 ROCKWOOD DR	MARTIN BRENDA F & ALEX JACOB MARTIN & STEPHANIE SIERRA MARTIN	4011 ROCKWOOD DR LAGO VISTA TX US 78645-6427	https://stage.travis.prodigycad.com/property-detail/173457
65	173459	4103 ROCKWOOD DR	GARFIELD DAVID R & TERESA P	4103 ROCKWOOD DR LAGO VISTA TX 78645-6429	https://stage.travis.prodigycad.com/property-detail/173459
66	173460	4105 ROCKWOOD DR	GARFIELD DAVID R & TERESA P	4103 ROCKWOOD DR LAGO VISTA TX 78645-6429	https://stage.travis.prodigycad.com/property-detail/173460
67	173461	4107 ROCKWOOD DR	GLAZNER CHRISTOPHER GEORGE & TIFFANY MICHELLE GLAZNER	4107 ROCKWOOD DR LAGO VISTA TX 78645-6429	https://stage.travis.prodigycad.com/property-detail/173461
68	173462	4109 ROCKWOOD DR	HINSON THERESE A & JAMES	4111 ROCKWOOD DR LAGO VISTA TX 78645-6429	https://stage.travis.prodigycad.com/property-detail/173462
69	173463	4111 ROCKWOOD DR	HINSON JAMES & THERESE ANN ESTATE	4111 ROCKWOOD DR LAGO VISTA TX 78645-6429	https://stage.travis.prodigycad.com/property-detail/173463
70	173464	4113 ROCKWOOD DR	HENRY BRADFORD WILLIAM	4113 ROCKWOOD DR LAGO VISTA TX 78645-6429	https://stage.travis.prodigycad.com/property-detail/173464
71	173465	4115 ROCKWOOD DR	HENRY BRADFORD WILLIAM	4113 ROCKWOOD DR LAGO VISTA TX 78645-6429	https://stage.travis.prodigycad.com/property-detail/173465
72	173466	4117 ROCKWOOD DR	CAROFFINO RANDY LEWIS & COLLEEN MARIE	4117 ROCKWOOD DR LAGO VISTA TX 78645-6429	https://stage.travis.prodigycad.com/property-detail/173466
73	173467	4119 ROCKWOOD DR	COLEMAN TYLER ROBERT & ZOE MAYLEONG STANLEY	4119 ROCKWOOD DR LAGO VISTA TX 78645-6429	https://stage.travis.prodigycad.com/property-detail/173467
74	173468	4121 ROCKWOOD DR	THLYAGARAJAN KRISHNAN & MEENAKSHI KRISHNAN	34387 BENEDICK LN FREMONT CA 94555-2136	https://stage.travis.prodigycad.com/property-detail/173468
75	173470	4125 ROCKWOOD DR	MILLS JOINT REVOCABLE TRUST	4125 ROCKWOOD DR LAGO VISTA TX USA 78645-6430	https://stage.travis.prodigycad.com/property-detail/173470
76	173471	4127 ROCKWOOD DR	CHOWDHURY MOYEEDUL	2907 CHISHOLM TRL AUSTIN TX 78734-2413	https://stage.travis.prodigycad.com/property-detail/173471
77	173531	20905 GREENPARK DR	COLEMAN SHERRIE LYNN	10 CITRUS DR ROCHESTER NY 14606-4333	https://stage.travis.prodigycad.com/property-detail/173531
78	173532	20903 GREENPARK DR	HOWERTON DAVID J & SHIRLEY GUSS	4029 ROUNDTOP DR SEVIERVILLE TN 37862-5808	https://stage.travis.prodigycad.com/property-detail/173532
79	173533	20901 GREENPARK DR	ERFAN SAEED & ROYA	19415 GREENWOOD DR APT 1 CUPERTINO CA 95014-7404	https://stage.travis.prodigycad.com/property-detail/173533
80	173534	20811 GREENPARK DR	KELLEHER MICHAEL	412 ARROWHEAD VINE ST LEANDER TX 78641-5318	https://stage.travis.prodigycad.com/property-detail/173534
81	173535	20809 GREENPARK DR	LIZANA JOSE LUIS SANCHEZ	01700 MEXICO D F COL PUEBLO TEFELPAN NU	https://stage.travis.prodigycad.com/property-detail/173535
83	173552	21477 LAKEFRONT DR	BIZSEAN LLC	14900 AVERY RANCH BLVD, STE C200 #218 AUSTIN TX 78717-3951	https://stage.travis.prodigycad.com/property-detail/173552
84	173553	21475 LAKEFRONT DR	BIZSEAN LLC	14900 AVERY RANCH BLVD, STE C200 #218 AUSTIN TX 78717-3951	https://stage.travis.prodigycad.com/property-detail/173553
85	173554	21473 LAKEFRONT DR	SHELTON CHARLES & TIFFANY ASH	13202 136TH PL NE KIRKLAND WA 98034-5157	https://stage.travis.prodigycad.com/property-detail/173554
86	173555	21471 LAKEFRONT DR	SHELTON CHARLES & TIFFANY ASH	13202 136TH PL NE KIRKLAND WA 98034-5157	https://stage.travis.prodigycad.com/property-detail/173555
87	173556	21469 LAKEFRONT DR	LEAN MADAME KOK YOON & KWAN AND MADELINE SOO	5519 N HOLLYWOOD AVE MILWAUKEE WI 53217-5207	https://stage.travis.prodigycad.com/property-detail/173556
88	173557	21467 LAKEFRONT DR	JURCA CORNEL TRUSTEE OF LAKEFRONT TRUST	19632 HARVEST AVE CERRITOS CA 90703-6563	https://stage.travis.prodigycad.com/property-detail/173557
89	173558	21465 LAKEFRONT DR	MURCHISON KENNA	1784 157TH LN NW ANDOVER MN 55304-2795	https://stage.travis.prodigycad.com/property-detail/173558
90	173559	21463 LAKEFRONT DR	HART DAVID B & JAMIE A	21463 LAKEFRONT DR LAGO VISTA TX 78645-6121	https://stage.travis.prodigycad.com/property-detail/173559
91	173561	3955 OUTPOST TRCE	TUOMALA ADAM & SUSAN ELAINE GOSEWEHR	3955 OUTPOST TRCE LAGO VISTA TX 78645-6244	https://stage.travis.prodigycad.com/property-detail/173561
92	173562	3957 OUTPOST TRCE	FULLER JUSTIN M	3957 OUTPOST TRCE LAGO VISTA TX 78645-6244	https://stage.travis.prodigycad.com/property-detail/173562
93	173563	3959 OUTPOST TRCE	WHITELAW STEVEN A & MELISSA	3959 OUTPOST TRCE LAGO VISTA TX 78645-6244	https://stage.travis.prodigycad.com/property-detail/173563
94	173564	3961 OUTPOST TRCE	SCHROCK ABIGAIL & FRANK SOLIZ	3961 OUTPOST TRCE LAGO VISTA TX 78645-6244	https://stage.travis.prodigycad.com/property-detail/173564
95	173565	4001 OUTPOST TRCE	MARTINEZ DIEGO RICARDO GARCIA	4001 OUTPOST TRCE LAGO VISTA TX 78645-6460	https://stage.travis.prodigycad.com/property-detail/173565
96	173566	4003 OUTPOST TRCE	SQUIRES JACKLYN & ROBERT	4003 OUTPOST TRCE LAGO VISTA TX 78645-6460	https://stage.travis.prodigycad.com/property-detail/173566
97	173567	4005 OUTPOST TRCE	KRIEG DIANA SUE & ROBERT T	4005 OUTPOST TRCE LAGO VISTA TX USA 78645-6460	https://stage.travis.prodigycad.com/property-detail/173567
98	173568	21300 PARK CIR	ALI KURDO	2000 CEDAR BEND DR APT 735 AUSTIN TX USA 78758-5338	https://stage.travis.prodigycad.com/property-detail/173568
99	173569	21302 PARK CIR	AGAR STELLAR LLC	527 CENTERBROOK PL ROUND ROCK TX 78665-1453	https://stage.travis.prodigycad.com/property-detail/173569
100	173570	21306 PARK CIR	LUKER R W & BETTY	PO BOX 331654 CORPUS CHRISTI TX 78463-1654	https://stage.travis.prodigycad.com/property-detail/173570
101	173571	21308 PARK CIR	MALLESWARI VITTALAM	1232 LOW BRANCH LN LEANDER TX US 78641-919	https://stage.travis.prodigycad.com/property-detail/173571
102	173572	21307 PARK CIR	CITY OF LAGO VISTA	PO BOX 4727 LAGO VISTA TX 78645-0008	https://stage.travis.prodigycad.com/property-detail/173572
103	173573	21305 PARK CIR	CITY OF LAGO VISTA	PO BOX 4727 LAGO VISTA TX 78645-0008	https://stage.travis.prodigycad.com/property-detail/173573
104	173574	21303 PARK CIR	DL PHILLIPS HOLDINGS INC	PO BOX 40159 AUSTIN TX 78704-0003	https://stage.travis.prodigycad.com/property-detail/173574
105	173575	21301 PARK CIR	MONEEM TANVIR & MITALY	11014 MANSFIELD DR FRISCO TX USA 75035-6429	https://stage.travis.prodigycad.com/property-detail/173575
106	173576	21225 OAK DALE DR	GREG SMALL CUSTOM HOMES INC	7400 LOHMANS FORD RD STE A LAGO VISTA TX 78645-4	https://stage.travis.prodigycad.com/property-detail/173576
107	173577	21223 OAK DALE DR	FORS ODIN	21223 OAK DALE DR LAGO VISTA TX 78645-6650	https://stage.travis.prodigycad.com/property-detail/173577
108	173578	21221 OAK DALE DR	HARRISON WILLIAM B & COLLEEN	21221 OAK DALE DR LAGO VISTA TX 78645-6650	https://stage.travis.prodigycad.com/property-detail/173578
109	173580	21677 HIGH DR	WEIGELT LAWRENCE W	21677 HIGH DR LAGO VISTA TX 78645-6512	https://stage.travis.prodigycad.com/property-detail/173580
110	173581	21675 HIGH DR	KNIGHT KEITH A & TAMARA A	21675 HIGH DR LAGO VISTA TX 78645-6512	https://stage.travis.prodigycad.com/property-detail/173581
111	173582	21673 HIGH DR	DESOSA MICHAEL & JACQUELYN	21673 HIGH DR LAGO VISTA TX 78645-6512	https://stage.travis.prodigycad.com/property-detail/173582
112	173584	21669 HIGH DR	RAGER JASON & TONI MICHELLE RAGER	21669 HIGH DR LAGO VISTA TX 78645-6512	https://stage.travis.prodigycad.com/property-detail/173584
113	173585	21667 HIGH DR	DIEHL JOHN & GWENDOLYN S	21667 HIGH DR LAGO VISTA TX 78645-6512	https://stage.travis.prodigycad.com/property-detail/173585
114	173623	4137 ROCKWOOD DR	BOYLAN EDMUND & JOANI PEPPER	4137 ROCKWOOD DR LAGO VISTA TX 78645-6430	https://stage.travis.prodigycad.com/property-detail/173623
115	173624	4139 ROCKWOOD DR	LANCAM ENTERPRISES INC	6553 STAR CT LAREDO TX 78041-9140	https://stage.travis.prodigycad.com/property-detail/173624
116	173625	4141 ROCKWOOD DR	RODRIGUEZ ISRAEL AGUSTIN & DARLELA AVILA	4141 ROCKWOOD DR LAGO VISTA TX 78645-6430	https://stage.travis.prodigycad.com/property-detail/173625
117	173626	4201 ROCKWOOD DR	GATES MARILYN J	4201 ROCKWOOD DR LAGO VISTA TX 78645-6433	https://stage.travis.prodigycad.com/property-detail/173626
118	173627	4203 ROCKWOOD DR	X9 BUILDERS LLC	210 VAILCO LN AUSTIN TX 78738-6566	https://stage.travis.prodigycad.com/property-detail/173627
119	173628	4205 ROCKWOOD DR	WALKER SHERRI LYNN	4205 ROCKWOOD DR LAGO VISTA TX 78645-6433	https://stage.travis.prodigycad.com/property-detail/173628
120	173629	4207 ROCKWOOD DR	MAGDALENO JOHN A	PO BOX 4629 LAGO VISTA TX 78645-0014	https://stage.travis.prodigycad.com/property-detail/173629
121	173630	4209 ROCKWOOD DR	SOLIS UBALDO GARCIA	508 E HOWARD LN TRLR 583 AUSTIN TX USA 78753-9784	https://stage.travis.prodigycad.com/property-detail/173630
122	173631	4211 ROCKWOOD DR	BORTOLUSSI SHAWN & DENISE	4211 ROCKWOOD DR LAGO VISTA TX 78645-6433	https://stage.travis.prodigycad.com/property-detail/173631
124	173670	4052 OUTPOST TRCE	GOMEZ JAVIER C	44100-44999 GUADALAJARA JALISCO JARDINES DEL BOSQUE	https://stage.travis.prodigycad.com/property-detail/173670
125	173671	4050 OUTPOST TRCE	RIOS-FERRY KATHY & JENNIFER RIOS	4050 OUTPOST TRCE LAGO VISTA TX 78645-6456	https://stage.travis.prodigycad.com/property-detail/173671

126	173672	4048 OUTPOST TRCE	DIERKER LAWRENCE E & JULIA C	6509 DURFORD ST HOUSTON TX 77007-2077	https://stage.travis.prodigycad.com/property-detail/173672
127	173673	4046 OUTPOST TRCE	BENSON LEE H & PATRICIA	4046 OUTPOST TRCE LAGO VISTA TX 78645-6456	https://stage.travis.prodigycad.com/property-detail/173673
128	173674	4044 OUTPOST TRCE	ESCOBAR SAMUEL ALEJANDRO & PAOLA ALEJANDRA DOMINGUEZ	4044 OUTPOST TRCE LAGO VISTA TX 78645-6456	https://stage.travis.prodigycad.com/property-detail/173674
129	173675	4042 OUTPOST TRCE	TEXAS LONESTAR DIAMOND LLC	1131 W 18TH ST HOUSTON TX 77008-3340	https://stage.travis.prodigycad.com/property-detail/173675
130	173677	4038 OUTPOST TRCE	BARONAS FAMILY TRUST	4038 OUTPOST TRCE LAGO VISTA TX 78645-6456	https://stage.travis.prodigycad.com/property-detail/173677
131	173678	4036 OUTPOST TRCE	LANDZA JUDY W	4036 OUTPOST TRCE LAGO VISTA TX 78645	https://stage.travis.prodigycad.com/property-detail/173678
132	173679	4034 OUTPOST TRCE	UIHLEIN CAROLYN L	4034 OUTPOST TRCE LAGO VISTA TX 78645-6456	https://stage.travis.prodigycad.com/property-detail/173679
133	173680	4032 OUTPOST TRCE	DLORM ROBERTO B & MARIA LOURDES	4032 OUTPOST TRCE LAGO VISTA TX 78645-6456	https://stage.travis.prodigycad.com/property-detail/173680
134	173681	4032 OUTPOST TRCE	DLORM ROBERTO & MARIA	4032 OUTPOST TRCE LAGO VISTA TX 78645-6456	https://stage.travis.prodigycad.com/property-detail/173681
135	173682	4028 OUTPOST TRCE	BESETT IRIS INEZ	4028 OUTPOST TRCE LAGO VISTA TX 78645-6456	https://stage.travis.prodigycad.com/property-detail/173682
136	173683	4024 OUTPOST TRCE	MILIVOJAC STEVE	4024 OUTPOST TRCE LAGO VISTA TX 78645-6456	https://stage.travis.prodigycad.com/property-detail/173683
137	173684	4022 OUTPOST TRCE	GOONE RICHARD L & MADELYN K	4022 OUTPOST TRCE LAGO VISTA TX 78645-6456	https://stage.travis.prodigycad.com/property-detail/173684
138	173686	4018 OUTPOST TRCE	BARRETT N LEE & HELEN H TRSTE	4018 OUTPOST TRCE LAGO VISTA TX 78645-6453	https://stage.travis.prodigycad.com/property-detail/173686
139	173687	21207 GREENPARK DR	AP BUILDING PROJECTS LLC	223 W RHAPSODY DR SAN ANTONIO TX 78216-3107	https://stage.travis.prodigycad.com/property-detail/173687
140	173688	21205 GREENPARK DR	TRIANGLE @ RIVERSIDE LLC	PO BOX 29343 AUSTIN TX 78755-6343	https://stage.travis.prodigycad.com/property-detail/173688
141	173689	21203 GREENPARK DR	BUNNELL TRACY	21203 GREENPARK DR LAGO VISTA TX 78645-6475	https://stage.travis.prodigycad.com/property-detail/173689
142	173690	21201 GREENPARK DR	BURNS MELISSA	21201 GREENPARK DR LAGO VISTA TX 78645-6475	https://stage.travis.prodigycad.com/property-detail/173690
143	173691	21111 GREENPARK DR	SCHULTZ ERIK	21111 GREENPARK DR LAGO VISTA TX 78645-6423	https://stage.travis.prodigycad.com/property-detail/173691
144	173692	21109 GREENPARK DR	SCHULTZ ERIK	21109 GREENPARK DR LAGO VISTA TX 78645-6423	https://stage.travis.prodigycad.com/property-detail/173692
145	173693	21107 GREENPARK DR	MARTINEZ AMBROCIO LOPEZ	9700 HANSFORD DR AUSTIN TX 78753-4318	https://stage.travis.prodigycad.com/property-detail/173693
146	173694	21105 GREENPARK DR	WALKER JOHN	21105 GREENPARK DR LAGO VISTA TX 78645	https://stage.travis.prodigycad.com/property-detail/173694
147	173697	21101 GREENPARK DR	WHEATLEY KRISTIN & GREG	21101 GREENPARK DR LAGO VISTA TX 78645-6423	https://stage.travis.prodigycad.com/property-detail/173697
148	173698	21009 GREENPARK DR,	GORDEEV DMITRY	248 ADDIE ROY RD STE A-204 AUSTIN TX 78746-4134	https://stage.travis.prodigycad.com/property-detail/173698
149	173699	21007 GREENPARK DR	HUEY MARGARET YVONNE & THOMAS	603 WINNSBORO CV ROUND ROCK TX USA 78664-3226	https://stage.travis.prodigycad.com/property-detail/173699
150	173700	21005 GREENPARK DR	HUEY YVONNE & THOMAS HUEY JR	603 WINNSBORO CV ROUND ROCK TX 78664-3226	https://stage.travis.prodigycad.com/property-detail/173700
151	173752	21509 LAKE PARK DR	CLAY STEPHANIE	21487 LAKEFRONT DR LAGO VISTA TX 78645-6121	https://stage.travis.prodigycad.com/property-detail/173752
152	173753	21487 LAKEFRONT DR	ALEXANDRESCU PATRICIA A & STEPHANIE CLAY	22 HIGHLAND MEWS GLEN COVE NY 11542-2763	https://stage.travis.prodigycad.com/property-detail/173753
153	173754	21485 LAKEFRONT DR	CLAY STEPHANIE	21487 LAKEFRONT DR LAGO VISTA TX 78645-6121	https://stage.travis.prodigycad.com/property-detail/173754
154	173755	21483 LAKEFRONT DR	PETERSEN NEAL A	PO BOX 27902 AUSTIN TX 78755-7902	https://stage.travis.prodigycad.com/property-detail/173755
155	173757	21665 HIGH DR	GIROUARD PAUL & JOHANNA M	21665 HIGH DR LAGO VISTA TX 78645-6512	https://stage.travis.prodigycad.com/property-detail/173757
156	173758	21663 HIGH DR	LEWIS RICKY L & TONY PAULETTE LEWIS	PO BOX 4756 LAGO VISTA TX 78645-0008	https://stage.travis.prodigycad.com/property-detail/173758
157	173759	21661 HIGH DR	MUMFORD BOBBY R & DEBORAH A	21661 HIGH DR LAGO VISTA TX 78645-6512	https://stage.travis.prodigycad.com/property-detail/173759
158	173760	21659 HIGH DR	VAUGHN DAVID ALBERT	140 RIDGEVIEW CT GEORGETOWN TX USA 78628-6026	https://stage.travis.prodigycad.com/property-detail/173760
159	173763	21653 HIGH DR	HOYT JESSICA L	21653 HIGH DR LAGO VISTA TX 78645-6512	https://stage.travis.prodigycad.com/property-detail/173763
160	173764	21651 HIGH DR	CITY OF LAGO VISTA	PO BOX 4727 LAGO VISTA TX 78645-0008	https://stage.travis.prodigycad.com/property-detail/173764
161	173765	21647 HIGH DR	CITY OF LAGO VISTA	PO BOX 4727 LAGO VISTA TX 78645-0008	https://stage.travis.prodigycad.com/property-detail/173765
162	173766	21645 HIGH DR	LANDAUER WENDY E	3544 S RANCH ROAD 620 # 11207 BEE CAVE TX US 78738	https://stage.travis.prodigycad.com/property-detail/173766
163	173913	3713 PARLIAMENT CV	HILO PROPERTIES LLC	56 LEGEND LN HOUSTON TX 77024-2400	https://stage.travis.prodigycad.com/property-detail/173913
164	173941	3903 LAKE PARK CV	ROBERTSON JAMES C	3903 LAKE PARK CV LAGO VISTA TX 78645-6109	https://stage.travis.prodigycad.com/property-detail/173941
165	173942	3905 LAKE PARK CV	ROBERTSON JAMES C	3903 LAKE PARK CV LAGO VISTA TX 78645-6109	https://stage.travis.prodigycad.com/property-detail/173942
166	175446	20701 DEEP CRK	BIZSEAN LLC	14900 AVERY RANCH BLVD AUSTIN TX 78717-3951	https://stage.travis.prodigycad.com/property-detail/175446
167	175447	20603 DEEP CRK	FROSS ELISA J	20603 DEEP CRK LAGO VISTA TX 78645-6034	https://stage.travis.prodigycad.com/property-detail/175447
168	175448	20601 DEEP CRK	GARCIA-BRADY TODD & SOLEDAD	20601 DEEP CRK LAGO VISTA TX 78645-6034	https://stage.travis.prodigycad.com/property-detail/175448
169	175449	20600 DEEP CRK	BRADY-GARCIA TODD & SOLEDAD	20601 DEEP CRK LAGO VISTA TX 78645-6034	https://stage.travis.prodigycad.com/property-detail/175449
170	175450	20602 DEEP CRK	LITTLE ROCK BUILDERS INC	8105 W 121ST ST GRAND PRAIRIE, ALBERTA, CANADA T8W 0M7	https://stage.travis.prodigycad.com/property-detail/175450
171	175451	20700 DEEP CRK	BRZESKI ALEXANDER TOMASZ	20700 DEEP CRK LAGO VISTA TX US 78645-5040	https://stage.travis.prodigycad.com/property-detail/175451
172	175452	20702 DEEP CRK	EVANS MARLY	20702 DEEP CRK LAGO VISTA TX USA 78645-5040	https://stage.travis.prodigycad.com/property-detail/175452
173	175453	20711 FALCON	BRUNET MANUEL J	5705 POOL CANYON CV AUSTIN TX 78734-1344	https://stage.travis.prodigycad.com/property-detail/175453
174	175454	20709 FALCON	SERVICEKARMA LLC	14608 IVEANS WAY AUSTIN TX USA 78717-4179	https://stage.travis.prodigycad.com/property-detail/175454
175	175455	20707 FALCON	BAGLEY JACOB GALEN	20707 FALCON LAGO VISTA TX 78645	https://stage.travis.prodigycad.com/property-detail/175455
176	175456	20705 FALCON	MUYEED KAFIL H S & UZMA S J MUYEED	8312 PRAIRIE RYE DR LAGO VISTA TX 78645-2095	https://stage.travis.prodigycad.com/property-detail/175456
177	175457	20703 FALCON	VANDEGRIFF JOSEPH & BARBARA	20703 FALCON LAGO VISTA TX 78645-6076	https://stage.travis.prodigycad.com/property-detail/175457
179	175459	4802 APACHE	KHAWAJA KASHIF R & KHURRAM KHAWAJA	6612 AVENIDA ANN DR LAGO VISTA TX 78645-5007	https://stage.travis.prodigycad.com/property-detail/175459
180	175460	4800 APACHE	CHAKMA SURAJ	6008 MILANO DR PLANO TX 75093-7084	https://stage.travis.prodigycad.com/property-detail/175460
181	175461	4801 APACHE	DE LA CRUZ ERIC OUDIE & BRITTANY	4801 APACHE CV LAGO VISTA TX USA 78645-6045	https://stage.travis.prodigycad.com/property-detail/175461
184	175466	4804 MUSTANG	IYER MEENA	17110 MAJESTIC RIDGE RD AUSTIN TX 78738-1208	https://stage.travis.prodigycad.com/property-detail/175466
185	175467	4802 MUSTANG RD	CULVER JERRY DAN & KATHLEEN DALE	4802 MUSTANG RD LAGO VISTA TX 78645-6302	https://stage.travis.prodigycad.com/property-detail/175467
187	175469	4704 OUTPOST TRCE	SUDARMANTO BAMBANG & CHIQUITA P	1700 SOUTHCREEK DR LEANDER TX 78641-7917	https://stage.travis.prodigycad.com/property-detail/175469
188	175470	4702 OUTPOST TRCE	RIZK DEBBIE L	4702 OUTPOST TRCE LAGO VISTA TX 78645-6340	https://stage.travis.prodigycad.com/property-detail/175470
189	175471	4806 TURNBACK ST	MANGRUM JOHN & BARBARA	4806 TURNBACK ST LAGO VISTA TX 78645-6036	https://stage.travis.prodigycad.com/property-detail/175471
190	175473	21202 KIOWA	ALLEN RUSSELL L REVOCABLE TRUST	15907 ABERDEEN TRAILS DR HOUSTON TX 77095-3730	https://stage.travis.prodigycad.com/property-detail/175473

191	175474	21204 KIOWA	KAM KYUNG SOO	1714 CARRIAGE WAY SUGAR LAND TX 77478-4201	https://stage.travis.prodigycad.com/property-detail/175474
192	175475	21205 KIOWA CV	SALOMON CHARLES L & JACQUELINE A	21205 KIOWA CV LAGO VISTA TX 78645-6000	https://stage.travis.prodigycad.com/property-detail/175475
193	175476	21203 KIOWA CV	KELLEY PATRICIA JEANNINE	21203 KIOWA CV LAGO VISTA TX 78645-6000	https://stage.travis.prodigycad.com/property-detail/175476
195	175478	4800 TURNBACK ST	WHEELER JENNIFER	4800 TURNBACK ST LAGO VISTA TX USA 78645-6037	https://stage.travis.prodigycad.com/property-detail/175478
196	175500	5000 ARROWHEAD DR	VISTA ESTATES LLC	4558 CAPE CHARLES DR PLANO TX 75024-7342	https://stage.travis.prodigycad.com/property-detail/175500
197	175501	4910 ARROWHEAD DR	VISTA ESTATES LLC	4558 CAPE CHARLES DR PLANO TX 75024-7342	https://stage.travis.prodigycad.com/property-detail/175501
198	175502	4908 ARROWHEAD DR	PARKS KINUE ESTATE	886 PARTRIDGE AVE MENLO PARK CA 94025-5216	https://stage.travis.prodigycad.com/property-detail/175502
199	175503	4906 ARROWHEAD DR	DAVIS FANNI MIRIAM	7411 NICHOLFOREST LN SPRING TX USA 77389-2113	https://stage.travis.prodigycad.com/property-detail/175503
200	175504	4801 COUNTRY CLUB DR	C&A HOMES	PO BOX 3066 CEDAR PARK TX 78630-3066	https://stage.travis.prodigycad.com/property-detail/175504
201	175506	4803 COUNTRY CLUB DR	WOLF RANDY WARREN & ELIZABETH JOAN	4803 COUNTRY CLUB DR LAGO VISTA TX 78645-6073	https://stage.travis.prodigycad.com/property-detail/175506
202	175507	4903 COUNTRY CLUB DR	GIBSON SUSIE A LIFE ESTATE	4903 COUNTRY CLUB DR LAGO VISTA TX 78645-6025	https://stage.travis.prodigycad.com/property-detail/175507
203	175508	4700 THUNDERBIRD	TWISTING TRAILS PROPERTIES LLC	21003 TWISTING TRL LAGO VISTA TX 78645-6440	https://stage.travis.prodigycad.com/property-detail/175508
204	175509	4703 COUNTRY CLUB DR	ARTEAGA JOSE S & CHANELLE M	PO BOX 5782 LAGO VISTA TX US 78645-0027	https://stage.travis.prodigycad.com/property-detail/175509
206	175511	4703 SIOUX	LOFTIS WYNN EUGENE & TAMI DENISE	4703 SIOUX LAGO VISTA TX 78645	https://stage.travis.prodigycad.com/property-detail/175511
207	175512	4704 SIOUX	MANEY PATRICIA	4704 SIOUX LAGO VISTA TX 78645-6007	https://stage.travis.prodigycad.com/property-detail/175512
208	175513	4702 SIOUX	HENDERSON MONICA I & DANIEL L HENDERSON	4702 SIOUX LAGO VISTA TX 78645	https://stage.travis.prodigycad.com/property-detail/175513
212	175517	4705 HUACO CV	WENDL STEPHANIE & MARKUS WENDL	4705 HUACO CV LAGO VISTA TX 78645	https://stage.travis.prodigycad.com/property-detail/175517
213	175518	4706 HUACO CV	MCDONALD KAREN	4706 HUACO CV LAGO VISTA TX 78645-6008	https://stage.travis.prodigycad.com/property-detail/175518
216	175523	4705 COMANCHE	GRANGER JOHN RYAN & LEANDRA KAYE	4705 COMACHE LAGO VISTA TX USA 78645	https://stage.travis.prodigycad.com/property-detail/175523
217	175524	4704 COMANCHE	CHAN YING WAI	4704 COMANCHE LAGO VISTA TX 78645-6006	https://stage.travis.prodigycad.com/property-detail/175524
220	175530	4707 NAVAJO CV	SHIVE JOHN L & DOROTHY J	4707 NAVAJO CV LAGO VISTA TX 78645-6062	https://stage.travis.prodigycad.com/property-detail/175530
223	175536	4805 ARROWHEAD DR	WELLMAN THOMAS & JANE ANN WELLMAN	4805 ARROWHEAD DR LAGO VISTA TX US 78645-6003	https://stage.travis.prodigycad.com/property-detail/175536
224	175537	4905 ARROWHEAD DR	CALDWELL FAMILY TRUST	4905 ARROWHEAD DR LAGO VISTA TX 78645-2272	https://stage.travis.prodigycad.com/property-detail/175537
225	175538	20911 TOMAHAWK ST	BLACK MICHAEL T	4511 W CHEYENNE AVE STE 601 N LAS VEGAS NV 89032-2464	https://stage.travis.prodigycad.com/property-detail/175538
226	175539	20909 TOMAHAWK ST	COOPER RUSSELL	20909 TOMAHAWK ST LAGO VISTA TX 78645-6050	https://stage.travis.prodigycad.com/property-detail/175539
227	175540	20907 TOMAHAWK ST	GSJ GROUP LLC	2205 W PARMER LN # 201 AUSTIN TX 78727-4331	https://stage.travis.prodigycad.com/property-detail/175540
228	175543	20901 TOMAHAWK ST	HUYCK RICHARD & SUSAN REVOCABLE TRUST	20901 TOMAHAWK ST LAGO VISTA TX 78645-6050	https://stage.travis.prodigycad.com/property-detail/175543
229	175544	20807 TOMAHAWK ST	NGUYEN HUY H	20807 TOMAHAWK ST LAGO VISTA TX 78645-6082	https://stage.travis.prodigycad.com/property-detail/175544
230	175545	20807 TOMAHAWK ST	NGUYEN HUY H	20807 TOMAHAWK ST LAGO VISTA TX 78645-6082	https://stage.travis.prodigycad.com/property-detail/175545
231	175546	20807 TOMAHAWK ST	NGUYEN HUY H	20807 TOMAHAWK ST LAGO VISTA TX 78645-6082	https://stage.travis.prodigycad.com/property-detail/175546
232	175547	20803 TOMAHAWK ST	ROSS JAMES F & KAY A	20803 TOMAHAWK ST LAGO VISTA TX 78645-6082	https://stage.travis.prodigycad.com/property-detail/175547
235	175550	4704 THUNDERBIRD	DEGRAFFENREID RICHARD LEE JR &	4704 THUNDERBIRD LAGO VISTA TX 78645-2018	https://stage.travis.prodigycad.com/property-detail/175550
236	175568	20704 DEEP CRK	WHITE JONATHAN HILARY & MINDY ANN SCHROEDER	21520 LAKEFRONT DR LAGO VISTA TX 78645-6123	https://stage.travis.prodigycad.com/property-detail/175568
237	175569	20706 DEEP CRK	GREEN FIELD TEXAS LLC	26 WOODGROVE IRVINE CA 92604-4628	https://stage.travis.prodigycad.com/property-detail/175569
238	175570	20708 DEEP CRK	IBARRA MIGUEL A	20708 DEEP CRK LAGO VISTA TX 78645-5040	https://stage.travis.prodigycad.com/property-detail/175570
240	175572	4701 THUNDERBIRD	DOWLING R & S TRUST	20207 BUCHANAN CV LAGO VISTA TX US 78645-71	https://stage.travis.prodigycad.com/property-detail/175572
241	175573	4703 THUNDERBIRD	WANGSGARD JEFF	10028 S MORGAN GROVE WAY SANDY UT 84092-4445	https://stage.travis.prodigycad.com/property-detail/175573
242	175574	4705 THUNDERBIRD	MERKA DANIEL ANTON	4705 THUNDERBIRD LAGO VISTA TX USA 78645-2018	https://stage.travis.prodigycad.com/property-detail/175574
244	175642	4726 COUNTRY CLUB DR	BELSHER TERRY W & SUSAN S	415 SHOALS PKWY BURNET TX US 78611-5537	https://stage.travis.prodigycad.com/property-detail/175642
245	175602	21201 TWISTING TRL	YALLALY MARTHA M & RANDALL L LAWSON	2806 PINE VALLEY DR CHAMPAIGN IL 61822-7984	https://stage.travis.prodigycad.com/property-detail/175602
246	175603	21105 TWISTING TRL	PHAM JOSEPH & LEA ANN DANG	1616 WEATHERFORD DR AUSTIN TX 78753-2041	https://stage.travis.prodigycad.com/property-detail/175603
247	175604	21103 TWISTING TRL	MCDONALD MICHAEL S & CINDY A GRECO-MCDONALD	21103 TWISTING TRL LAGO VISTA TX 78645-6441	https://stage.travis.prodigycad.com/property-detail/175604
248	175605	21101 TWISTING TRL	HAMBLIN MARILYN B & CHARLES M	21101 TWISTING TRL LAGO VISTA TX 78645-6441	https://stage.travis.prodigycad.com/property-detail/175605
249	175606	21015 TWISTING TRL	MONAHAN THOMAS P & CARMEN M LIVING TRUST	21015 TWISTING TRL LAGO VISTA TX 78645-6439	https://stage.travis.prodigycad.com/property-detail/175606
250	175607	21015 TWISTING TRL	MONAHAN THOMAS P AND CARMEN M LIVING TRUST	21015 TWISTING TRL LAGO VISTA TX 78645-6439	https://stage.travis.prodigycad.com/property-detail/175607
251	175617	20902 STONE CLIFF DR	HARPER SETH & MAYLLYN HARPER	735 JERRYS LN BUDA TX 78610-2905	https://stage.travis.prodigycad.com/property-detail/175617
252	175618	20904 STONE CLIFF DR	COUGHENOUR MARK D	9564 COMMONWEALTH RD BENTONVILLE AR 72712-8893	https://stage.travis.prodigycad.com/property-detail/175618
253	175619	20906 STONE CLIFF DR	BARRETT ARCHIE D & MIRIAM R	18002 AUSTIN BLVD LAGO VISTA TX 78645-9701	https://stage.travis.prodigycad.com/property-detail/175619
254	175620	20908 STONE CLIFF DR	HUMMING BIRD INVESTMENTS LP & BLUE MOUNTAIN CAPITAL LLC	1718 CAPITOL AVE CHEYENNE WY 82001-4528	https://stage.travis.prodigycad.com/property-detail/175620
255	175621	20910 STONE CLIFF DR	HUMMING BIRD INVESTMENTS LP & BLUE MOUNTAIN CAPITAL LLC	1718 CAPITOL AVE CHEYENNE WY 82001-4528	https://stage.travis.prodigycad.com/property-detail/175621
256	175622	20912 STONE CLIFF DR	HUMMING BIRD INVESTMENTS LP & BLUE MOUNTAIN CAPITAL LLC	1718 CAPITOL AVE CHEYENNE WY 82001-4528	https://stage.travis.prodigycad.com/property-detail/175622
257	175623	21000 STONE CLIFF DR	HUMMING BIRD INVESTMENTS LP & BLUE MOUNTAIN CAPITAL LLC	1718 CAPITOL AVE CHEYENNE WY 82001-4528	https://stage.travis.prodigycad.com/property-detail/175623
258	175624	21002 STONE CLIFF DR	HUMMING BIRD INVESTMENTS LP & BLUE MOUNTAIN CAPITAL LLC	1718 CAPITOL AVE CHEYENNE WY 82001-4528	https://stage.travis.prodigycad.com/property-detail/175624
259	175625	21004 STONE CLIFF DR	VO TRINH THI THUY	11716 RYDALWATER LN AUSTIN TX 78754-5734	https://stage.travis.prodigycad.com/property-detail/175625
260	175626	21006 STONE CLIFF DR	SHEIKH MUHAMMAD SUFYAN	3748 HOMEPLACE DR CELINA TX 75009-1766	https://stage.travis.prodigycad.com/property-detail/175626
261	175629	21100 STONE CLIFF DR	DAVIS JESSIE NELL	2420 PHARR DR MCKINNEY TX US 75072-2447	https://stage.travis.prodigycad.com/property-detail/175629
262	175630	21102 STONE CLIFF DR	BHUMI ESTATES LLC	1005 EVERGLADES DR ALLEN TX 75013-5651	https://stage.travis.prodigycad.com/property-detail/175630
263	175631	21104 STONE CLIFF DR	SUI MANSHI & PENG CHEN	75 PARK LN S UNIT 422 JERSEY CITY NJ USA 07310-3164	https://stage.travis.prodigycad.com/property-detail/175631
264	175632	21106 STONE CLIFF DR	WOLF RANDY & ELIZABETH WARREN	4803 COUNTRY CLUB DR LAGO VISTA TX 78645-6073	https://stage.travis.prodigycad.com/property-detail/175632
265	175633	21202 TWISTING TRL	WOLF RANDALL WARREN & ELIZABETH JOAN WARREN	4803 COUNTRY CLUB DR LAGO VISTA TX 78645-6073	https://stage.travis.prodigycad.com/property-detail/175633
266	175635	4712 TURNBACK	DURAN ANNA M & JOSE ANGEL MAYO DURAN	2200 NATHAN DR AUSTIN TX 78728-4515	https://stage.travis.prodigycad.com/property-detail/175635

267	175637	4708 TURNBACK ST	SMALL GREG	4708 TURNBACK ST LAGO VISTA TX 78645-6015	https://stage.travis.prodigycad.com/property-detail/175637
268	175638	4706 TURNBACK ST	SMALL GREG	4708 TURNBACK ST LAGO VISTA TX 78645-6015	https://stage.travis.prodigycad.com/property-detail/175638
269	175639	4704 TURNBACK ST	VARGAS MILAGROS & ALEJANDRO ESCOTO	4704 TURNBACK ST LAGO VISTA TX 78645-6015	https://stage.travis.prodigycad.com/property-detail/175639
270	175640	4702 TURNBACK ST	MARKERT DAVID & CHRISTIE	4702 TURNBACK ST LAGO VISTA TX 78645-6015	https://stage.travis.prodigycad.com/property-detail/175640
271	175641	4700 TURNBACK	TRAVIS APRIL	11107 2ND ST JONESTOWN TX 78645-3208	https://stage.travis.prodigycad.com/property-detail/175641
272	175643	4724 COUNTRY CLUB DR	BELSHER TERRY W	415 SHOALS PKWY BURNET TX US 78611-5537	https://stage.travis.prodigycad.com/property-detail/175643
273	175644	4722 COUNTRY CLUB DR	SPEARS WADE	4722 COUNTRY CLUB DR LAGO VISTA TX 78645-6016	https://stage.travis.prodigycad.com/property-detail/175644
274	175645	4720 COUNTRY CLUB DR	BAUMHOLSER JUSTIN & MISTY	4720 COUNTRY CLUB DR LAGO VISTA TX 78645-6016	https://stage.travis.prodigycad.com/property-detail/175645
275	175646	4718 COUNTRY CLUB DR	ELLIS JAY & CAROLINA BENITEZ	4718 COUNTRY CLUB DR LAGO VISTA TX USA 78645-6016	https://stage.travis.prodigycad.com/property-detail/175646
276	175647	4732 COUNTRY CLUB DR	SMITH TRACY	4732 COUNTRY CLUB DR LAGO VISTA TX 78645-6022	https://stage.travis.prodigycad.com/property-detail/175647
277	175648	4732 COUNTY CLUB DR	SMITH TRACY & MELINDA	4732 COUNTRY CLUB DR LAGO VISTA TX 78645-6022	https://stage.travis.prodigycad.com/property-detail/175648
278	175649	4732 COUNTY CLUB DR	SMITH TRACY & MELINDA	4732 COUNTRY CLUB DR LAGO VISTA TX 78645-6022	https://stage.travis.prodigycad.com/property-detail/175649
279	175650	4710 COUNTRY CLUB DR	DUNCAN DARLENE D	4710 COUNTRY CLUB DR LAGO VISTA TX 78645-6016	https://stage.travis.prodigycad.com/property-detail/175650
280	175651	4708 COUNTRY CLUB DR	YEUNG WAI LUNG & MEI CHIU CHIU	5421 SUNSTAR CMN FREMONT CA 94555-2961	https://stage.travis.prodigycad.com/property-detail/175651
281	175652	4706 COUNTRY CLUB DR	TAYLOR NICHOLAS & COURTNEY NICOLE NORMAN	4706 COUNTRY CLUB DR LAGO VISTA TX USA 78645-6016	https://stage.travis.prodigycad.com/property-detail/175652
282	175653	4704 COUNTRY CLUB DR	CITY OF LAGO VISTA	PO BOX 4727 LAGO VISTA TX 78645-0008	https://stage.travis.prodigycad.com/property-detail/175653
283	175654	4702 COUNTRY CLUB DR	BEAGLE JEFF & CLARE	4702 COUNTRY CLUB DR LAGO VISTA TX USA 78645-6016	https://stage.travis.prodigycad.com/property-detail/175654
285	175657	4602 THUNDERBIRD	EGC OIL LLC	3720 GREENHOUSE RD HOUSTON TX 77084-5512	https://stage.travis.prodigycad.com/property-detail/175657
286	175658	4600 THUNDERBIRD	GRIMALDO GONZALO	8601 SHOWERS DR ELGIN TX 78621-5279	https://stage.travis.prodigycad.com/property-detail/175658
287	175659	4601 THUNDERBIRD	SMYTH DAVID	1509 E NEW HOPE DR CEDAR PARK TX 78641-5100	https://stage.travis.prodigycad.com/property-detail/175659
288	175660	20711 DEEP CRK	SMYTH DAVID	1509 E NEW HOPE DR CEDAR PARK TX 78641-5100	https://stage.travis.prodigycad.com/property-detail/175660
289	175661	20709 DEEP DRK	BRADY TODD WARREN & KEVIN MICHAEL MORGAN	20601 DEEP CRK LAGO VISTA TX 78645-6034	https://stage.travis.prodigycad.com/property-detail/175661
290	175662	20707 DEEP CRK	ARELLANO PAULINA RUIZ VELASCO	123 LA CIMA BOERNE TX USA 78006-3095	https://stage.travis.prodigycad.com/property-detail/175662
291	175663	20705 DEEP CRK	ARELLANO PAULINA RUIZ VELASCO	123 LA CIMA BOERNE TX USA 78006-3095	https://stage.travis.prodigycad.com/property-detail/175663
292	175664	20703 DEEP CRK	INGRAM CURTIS & MIRKA	20703 DEEP CRK LAGO VISTA TX USA 78645-5040	https://stage.travis.prodigycad.com/property-detail/175664
293	175688	21413 LAKEFRONT DR	HENDRICKSON JUSTIN & ALLISON	21413 LAKEFRONT DR LAGO VISTA TX 78645-6116	https://stage.travis.prodigycad.com/property-detail/175688
294	175689	21411 LAKEFRONT DR	LYNN IRIS	3101 S OCEAN DR NO 3003 HOLLYWOOD FL US 33019-2804	https://stage.travis.prodigycad.com/property-detail/175689
295	175690	21409 LAKEFRONT DR	CITY OF LAGO VISTA	PO BOX 4727 LAGO VISTA TX 78645-0008	https://stage.travis.prodigycad.com/property-detail/175690
296	175691	21407 LAKEFRONT DR	ZADOO HARSH & SANDHYA	11412 MIRAMONTE CV AUSTIN TX 78759-3989	https://stage.travis.prodigycad.com/property-detail/175691
298	175781	3925 OUTPOST TRCE	SKRINE JOHN D & JEAN	3925 OUTPOST TRCE LAGO VISTA TX 78645-6242	https://stage.travis.prodigycad.com/property-detail/175781
299	175782	3927 OUTPOST TRCE	WILDER CHRIS L & KELLI L WALDE	3927 OUTPOST TRCE LAGO VISTA TX 78645-6242	https://stage.travis.prodigycad.com/property-detail/175782
300	175783	3929 OUTPOST TRCE	GRACE JASON & GLORIA	3929 OUTPOST TRCE LAGO VISTA TX USA 78645-6242	https://stage.travis.prodigycad.com/property-detail/175783
301	175784	3931 OUTPOST TRCE	GEORGE NICHOLAS & KELSEY PAL	3931 OUTPOST TRCE LAGO VISTA TX USA 78645-6242	https://stage.travis.prodigycad.com/property-detail/175784
302	175785	3933 OUTPOST TRCE	SULLIVAN KEVIN P	3933 OUTPOST TRCE LAGO VISTA TX 78645-6242	https://stage.travis.prodigycad.com/property-detail/175785
303	175786	3935 OUTPOST TRCE	SCHMIDT GARY WAYNE & NANCY LETICIA	3935 OUTPOST TRCE LAGO VISTA TX 78645-6242	https://stage.travis.prodigycad.com/property-detail/175786
304	175787	3937 OUTPOST TRCE	REYES SHAWN PAUL & KRISTIE FLORES REYES	3937 OUTPOST TRCE LAGO VISTA TX 78645-6242	https://stage.travis.prodigycad.com/property-detail/175787
305	175788	3939 OUTPOST TRCE	MIKULAK JAMES & KATIE	3939 OUTPOST TRCE LAGO VISTA TX 78645-6242	https://stage.travis.prodigycad.com/property-detail/175788
306	175789	3941 OUTPOST TRCE	SLOAN DON & LORI	3941 OUTPOST TRCE LAGO VISTA TX 78645-6242	https://stage.travis.prodigycad.com/property-detail/175789
307	175790	3943 OUTPOST TRCE	LG OUTPOST LLC	6015 LOHMANS FORD RD STE 106 LAGO VISTA TX 78645-5161	https://stage.travis.prodigycad.com/property-detail/175790
308	175791	21445 LAKEFRONT DR	GENDRON BRIAN & ANGELA FOSTER	21445 LAKEFRONT DR LAGO VISTA TX 78645-6118	https://stage.travis.prodigycad.com/property-detail/175791
309	175792	21443 LAKEFRONT DR	TAYLOR JOHN HARVEY	30610 N HIGH MEADOW CIR MAGNOLIA TX 77355-3937	https://stage.travis.prodigycad.com/property-detail/175792
310	175793	21441 LAKEFRONT DR	STARR JERRY DON & ELIZABETH L	21441 LAKEFRONT DR LAGO VISTA TX 78645-6118	https://stage.travis.prodigycad.com/property-detail/175793
311	175794	21439 LAKEFRONT DR	PITTS ROBERT D & TRACEY F	21439 LAKEFRONT DR LAGO VISTA TX 78645-6118	https://stage.travis.prodigycad.com/property-detail/175794
312	175796	21435 LAKEFRONT DR	BERLI AMBER & JOE BERLI	5017 GREEN SHORE CIR LAGO VISTA TX 78645-6043	https://stage.travis.prodigycad.com/property-detail/175796
313	175797	21433 LAKEFRONT DR	WOLF KYLIE NOEL & GARRETT DAVID BURK	21433 LAKEFRONT DR LAGO VISTA TX 78645-6118	https://stage.travis.prodigycad.com/property-detail/175797
314	175798	21431 LAKEFRONT DR	DAVIS ERIC & MEGAN DAVIS	21431 LAKEFRONT DR LAGO VISTA TX 78645-6118	https://stage.travis.prodigycad.com/property-detail/175798
315	175799	21429 LAKEFRONT DR	YIU ANDY ANG	20805 S RIDGE ST LAGO VISTA TX 78645-6257	https://stage.travis.prodigycad.com/property-detail/175799
316	175800	21427 LAKEFRONT DR	MARKHAM MARK & JO A MARKHAM	21427 LAKEFRONT DR LAGO VISTA TX USA 78645-6118	https://stage.travis.prodigycad.com/property-detail/175800
317	175801	51425 LAKEFRONT DR	MEDALEAF REAL ESTATE	4500 NETTLE LN LAGO VISTA TX 78645-6237	https://stage.travis.prodigycad.com/property-detail/175801
318	175802	21423 LAKEFRONT DR	OLSEN GARY & JOYCE	21423 LAKEFRONT DR LAGO VISTA TX 78645-6118	https://stage.travis.prodigycad.com/property-detail/175802
319	175803	21421 LAKEFRONT DR	MCBRIDE ROBERT JR & JILL	21421 LAKEFRONT DR LAGO VISTA TX 78645-6118	https://stage.travis.prodigycad.com/property-detail/175803
320	175804	21419 LAKEFRONT DR	DAUGHERTY SCOTT & JOANN LIVING TRUST	21419 LAKEFRONT DR LAGO VISTA TX 78645-6118	https://stage.travis.prodigycad.com/property-detail/175804
321	175806	4609 RIMROCK DR	STUART KELLY D	4609 RIMROCK DR LAGO VISTA TX 78645-6144	https://stage.travis.prodigycad.com/property-detail/175806
322	175807	4611 LAKEFRONT DR	ZARATE RICHARD C	914 ARDSLEY LN BRIDGEWATER NJ 08807-1146	https://stage.travis.prodigycad.com/property-detail/175807
323	175808	21108 NATIONAL DR	HACKETT MARK	21108 NATIONAL DR LAGO VISTA TX 78645-6230	https://stage.travis.prodigycad.com/property-detail/175808
324	175809	21200 NATIONAL DR	FREELAND STEVEN & LAURA LIFE ESTATE	21200 NATIONAL DR LAGO VISTA TX 78645-6232	https://stage.travis.prodigycad.com/property-detail/175809
325	175810	21202 NATIONAL DR	MAY WILLIAM S	21202 NATIONAL DR LAGO VISTA TX 78645-6232	https://stage.travis.prodigycad.com/property-detail/175810
326	175811	21204 NATIONAL DR	COURADE MICHAEL	21204 NATIONAL DR LAGO VISTA TX US 78645-6232	https://stage.travis.prodigycad.com/property-detail/175811
327	175812	21206 NATIONAL DR	COX BRITTNEY N	21206 NATIONAL DR LAGO VISTA TX 78645-6232	https://stage.travis.prodigycad.com/property-detail/175812
328	175813	21208 NATIONAL DR	PADILLA RICARDO DANIEL	21208 NATIONAL DR LAGO VISTA TX 78645-6232	https://stage.travis.prodigycad.com/property-detail/175813
329	175814	4403 NETTLE LN	SNYDER FAMILY TRUST	4403 NETTLE LN LAGO VISTA TX US 78645-6234	https://stage.travis.prodigycad.com/property-detail/175814

330	175815	4405 NETTLE LN	STERNS DUSTIN & RACHEL HERRMAN	4405 NETTLE LN LAGO VISTA TX 78645-6234	https://stage.travis.prodigycad.com/property-detail/175815
331	175816	4405 NETTLE LN	STERNS DUSTIN & RACHEL HERRMAN	4405 NETTLE LN LAGO VISTA TX 78645-6234	https://stage.travis.prodigycad.com/property-detail/175816
332	175819	4501 NETTLE LN	GOODWIN FLOYD T & JACKLYN F	4501 NETTLE LN LAGO VISTA TX 78645-6219	https://stage.travis.prodigycad.com/property-detail/175819
333	175821	3924 OUTPOST TRCE	FOLAND PAM & ANDREA JOHNSON & STACY NUCKOLLS & LINDSAY LEON	1306 EMERALD RD LAGO VISTA TX 78645-7811	https://stage.travis.prodigycad.com/property-detail/175821
334	175822	3922 OUTPOST TRCE	GARCIA OMAR & EDITA GONZALEZ	12812 APPALOOSA CHASE DR AUSTIN TX 78732-1971	https://stage.travis.prodigycad.com/property-detail/175822
335	175823	21115 TWISTING TRL	WHEELER CHARLES K & BECKY S	21115 TWISTING TRL LAGO VISTA TX 78645-6441	https://stage.travis.prodigycad.com/property-detail/175823
336	175824	21113 TWISTING TRL	GARCIA OMAR & EDITA GONZALEZ	12812 APPALOOSA CHASE DR AUSTIN TX 78732-1971	https://stage.travis.prodigycad.com/property-detail/175824
337	175825	21111 TWISTING TRL	DILDINE RICHARD E REVOCABLE TRUST	21111 TWISTING TRL LAGO VISTA TX 78645-6441	https://stage.travis.prodigycad.com/property-detail/175825
338	175826	21109 TWISTING TRL	WILSON FAMILY TRUST	12308 BELLA PRATO DR FORT WORTH TX 76126-1514	https://stage.travis.prodigycad.com/property-detail/175826
339	175858	21457 LAKEFRONT DR	NEDRY RONALD CRAIG TRUST	PO BOX 6101 TEMPLE TX USA 76503-6101	https://stage.travis.prodigycad.com/property-detail/175858
340	175859	21455 LAKEFRONT DR	ZALESKI GARY B	21455 LAKEFRONT DR LAGO VISTA TX 78645-6121	https://stage.travis.prodigycad.com/property-detail/175859
341	175860	21453 LAKEFRONT DR	SMITH NORMA JOY	21453 LAKEFRONT DR LAGO VISTA TX 78645-6121	https://stage.travis.prodigycad.com/property-detail/175860
342	175861	21451 LAKEFRONT DR	TUCKER BENJAMIN & AIMEE	21451 LAKEFRONT DR LAGO VISTA TX 78645-6121	https://stage.travis.prodigycad.com/property-detail/175861
343	175862	21449 LAKEFRONT DR	SCHWAUSCH JOHN D & LINDA R	21449 LAKEFRONT DR LAGO VISTA TX 78645-6121	https://stage.travis.prodigycad.com/property-detail/175862
344	175865	3949 OUTPOST TRCE	SHOEMAKE EDNA ANNE	3949 OUTPOST TRCE LAGO VISTA TX US 78645-6244	https://stage.travis.prodigycad.com/property-detail/175865
345	175866	3951 OUTPOST TRCE	DEVIGILI ADAMO L	3951 OUTPOST TRCE LAGO VISTA TX USA 78645-6244	https://stage.travis.prodigycad.com/property-detail/175866
346	175867	3955 OUTPOST TRCE	TUOMALA ADAM & SUSAN GOSEWEHR	3955 OUTPOST TRCE LAGO VISTA TX 78645-6244	https://stage.travis.prodigycad.com/property-detail/175867
347	176839	5406 COUNTRY CLUB DR	WICHERT DEAN P	5406 COUNTRY CLUB DR LAGO VISTA TX 78645-5860	https://stage.travis.prodigycad.com/property-detail/176839
348	176840	5405 COUNTY CLUB DR	LIDDELL JUSTIN	5405 COUNTRY CLUB DR LAGO VISTA TX 78645-5874	https://stage.travis.prodigycad.com/property-detail/176840
349	176841	108 S LYNNWOOD TRL	SIQUEIROS JASON	108 S LYNNWOOD TRL CEDER PARK TX 78613	https://stage.travis.prodigycad.com/property-detail/176841
350	176842	5600 ARROWHEAD DR	KLIMAN LAURALYNDE & MATTHEW GROVE	5600 ARROWHEAD DR LAGO VISTA TX 78645-5805	https://stage.travis.prodigycad.com/property-detail/176842
351	176843	5506 ARROWHEAD DR	SECOND CHANCE HOLDINGS LLC	16303 ELM DR AUSTIN TX 78734-1144	https://stage.travis.prodigycad.com/property-detail/176843
352	176844	5504 ARROWHEAD DR	LOU PAMELA W & KEN WONG	1130 SCOTLAND DR CUPERTINO CA 95014-5051	https://stage.travis.prodigycad.com/property-detail/176844
353	176845	5502 ARROWHEAD DR	CRAFT CLAUDIE EUGENE	205 SAINT LOUIS ST FLATONIA TX 78941-5564	https://stage.travis.prodigycad.com/property-detail/176845
354	176846	5500 ARROWHEAD DR	NASIF DINA & KHALIL MARAM	43 LEGEND LN HOUSTON TX 77024-2408	https://stage.travis.prodigycad.com/property-detail/176846
355	176847	5406 ARROWHEAD DR	HATCH GARY MARK & KATHY T	5406 ARROWHEAD DR LAGO VISTA TX 78645-5857	https://stage.travis.prodigycad.com/property-detail/176847
356	176848	5404 ARROWHEAD DR	O'HARE RUSSELL JAMES & CYNTHIA LEE O'HARE	5404 ARROWHEAD DR LAGO VISTA TX 78645-5857	https://stage.travis.prodigycad.com/property-detail/176848
357	176849	5402 ARROWHEAD DR	FASANO TIMOTHY CRAIG & VICKI LYNN CANDUSSO	5402 ARROWHEAD DR LAGO VISTA TX 78645-5857	https://stage.travis.prodigycad.com/property-detail/176849
358	176850	5400 ARROWHEAD DR	ENGLAND MARK D & CYNTHIA A	5400 ARROWHEAD DR LAGO VISTA TX 78645-5857	https://stage.travis.prodigycad.com/property-detail/176850
359	176851	5306 ARROWHEAD DR	FOREMAN WILLIAM LAWRENCE II	27316 NE 143RD CT DUVALL WA 98019-8394	https://stage.travis.prodigycad.com/property-detail/176851
360	176852	5304 ARROWHEAD DR	FOREMAN TEXAS PROPERTIES LLC	27316 NE 143RD CT DUVALL WA 98019	https://stage.travis.prodigycad.com/property-detail/176852
361	176853	5302 ARROWHEAD DR	DMA CONTEMPORARY HOMES LLC	2520 WALSH TARLTON LN APT 2740 AUSTIN TX 78746-7774	https://stage.travis.prodigycad.com/property-detail/176853
362	176854	5300 ARROWHEAD DR	J A Z TRUST	PO BOX 1584 GALVESTON TX 77553-1584	https://stage.travis.prodigycad.com/property-detail/176854
363	176855	5210 ARROWHEAD DR	ASSEMI JULIET ROSE & KENNETH ASSEMI	5210 ARROWHEAD DR LAGO VISTA TX 78645	https://stage.travis.prodigycad.com/property-detail/176855
364	176856	5501 COUNTRY CLUB DR	DRAKE BRIAN C & MAUREEN	5501 COUNTRY CLUB DR LAGO VISTA TX 78645-5861	https://stage.travis.prodigycad.com/property-detail/176856
365	177115	5404 COUNTRY CLUB DR	BUBENIK RICKY A & SCHOLLEY R	5404 COUNTRY CLUB DR LAGO VISTA TX 78645-5860	https://stage.travis.prodigycad.com/property-detail/177115
366	177116	5402 COUNTRY CLUB DR	SMALE DELILAH ANN & DUANE WESLEY SMALE	5402 COUNTRY CLUB DR LAGO VISTA TX 78645-5860	https://stage.travis.prodigycad.com/property-detail/177116
367	177117	5400 COUNTRY CLUB DR	BROOKSHIER AULDON DOSS	20541 HIGHLAND LAKE DR LAGO VISTA TX 78645-6634	https://stage.travis.prodigycad.com/property-detail/177117
368	177118	5308 COUNTRY CLUB DR	HAMMONDS GENA S & GLORIA	5308 COUNTRY CLUB DR LAGO VISTA TX 78645-5831	https://stage.travis.prodigycad.com/property-detail/177118
369	177119	5306 COUNTRY CLUB DR	VILLARREAL GABRIEL L & ANGELICA G	5306 COUNTRY CLUB DR LAGO VISTA TX 78645-5831	https://stage.travis.prodigycad.com/property-detail/177119
370	177120	5304 COUNTRY CLUB DR	HANSEN DEBRA ANN	5304 COUNTRY CLUB DR LAGO VISTA TX 78645	https://stage.travis.prodigycad.com/property-detail/177120
371	177121	5302 COUNTRY CLUB DR	SMITH BRUCE H & CONSTANCE I	5302 COUNTRY CLUB DR LAGO VISTA TX 78645-5831	https://stage.travis.prodigycad.com/property-detail/177121
373	177123	5208 COUNTRY CLUB DR	WILLIAMS PATRICIA S	5208 COUNTRY CLUB DR LAGO VISTA TX 78645-6064	https://stage.travis.prodigycad.com/property-detail/177123
374	177124	5206 COUNTRY CLUB DR	TWIN OAKS ESTATES LLC	10900 TWISTED ELM DR AUSTIN TX 78726-2369	https://stage.travis.prodigycad.com/property-detail/177124
375	177125	5204 COUNTRY CLUB DR	HOOMANRAD NASIM & NAVID	PO BOX 4903 AUSTIN TX 78765-4903	https://stage.travis.prodigycad.com/property-detail/177125
376	177126	5202 COUNTRY CLUB DR	CITY OF LAGO VISTA	PO BOX 4727 LAGO VISTA TX 78645-0008	https://stage.travis.prodigycad.com/property-detail/177126
377	177127	5200 COUNTRY CLUB DR	CITY OF LAGO VISTA	PO BOX 4727 LAGO VISTA TX 78645-0008	https://stage.travis.prodigycad.com/property-detail/177127
378	177130	5102 COUNTRY CLUB DR	DIXON MARK K & SHELLY K	5102 COUNTRY CLUB DR LAGO VISTA TX 78645-6026	https://stage.travis.prodigycad.com/property-detail/177130
381	177135	21104 BLACKFOOT CV	SAGER IVAN & DAYLE SAGER	21104 BLACKFOOT CV LAGO VISTA TX 78645-6079	https://stage.travis.prodigycad.com/property-detail/177135
382	177136	21107 BLACKFOOT CV	HASH ROBERT	PO BOX 4716 LAGO VISTA TX 78645-0054	https://stage.travis.prodigycad.com/property-detail/177136
383	177137	21105 BLACKFOOT CV	POLIKAITIS ARUNAS B & LAURA A	21105 BLACKFOOT CV LAGO VISTA TX 78645-6033	https://stage.travis.prodigycad.com/property-detail/177137
386	177142	4904 TURNBACK ST	GOEBEL JAMES SCOTT	4904 TURNBACK ST LAGO VISTA TX 78645-6038	https://stage.travis.prodigycad.com/property-detail/177142
387	177143	4902 TURNBACK ST	BROWN GREGORY ALLAN	4902 TURNBACK ST LAGO VISTA TX 78645-6038	https://stage.travis.prodigycad.com/property-detail/177143
388	177144	4900 TURNBACK ST	WISER CHARLES & BARBARA	4900 TURNBACK ST LAGO VISTA TX 78645-6038	https://stage.travis.prodigycad.com/property-detail/177144
389	177145	4810 TURNBACK ST	KELLER KARL	4810 TURNBACK ST LAGO VISTA TX 78645-6036	https://stage.travis.prodigycad.com/property-detail/177145
390	177146	4808 TURNBACK ST	CZARNIAK ZENON JR & DIANNA	7513 TARGET LN NW ALBUQUERQUE NM 87120-3066	https://stage.travis.prodigycad.com/property-detail/177146
391	177147	4807 GREEN SHORE CIR	GSJ GROUP LLC	2205 W PARMER LN # 201 AUSTIN TX 78727-4331	https://stage.travis.prodigycad.com/property-detail/177147
392	177148	4809 GREEN SHORE CIR	WALLACE DONALD G & LINDA L	4809 GREEN SHORE CIR LAGO VISTA TX 78645-6042	https://stage.travis.prodigycad.com/property-detail/177148
393	177149	4901 GREEN SHORE CIR	MAY SYLVIA GUAJARDO	4901 GREEN SHORE CIR LAGO VISTA TX 78645-6042	https://stage.travis.prodigycad.com/property-detail/177149
394	177150	4901 GREEN SHORE CIR	MAY SYLVIA GUAJARDO	4901 GREEN SHORE CIR LAGO VISTA TX 78645-6042	https://stage.travis.prodigycad.com/property-detail/177150
395	177151	4905 GREEN SHORE CIR	SNYDER DAVID A & HEATHER	4905 GREEN SHORE CIR LAGO VISTA TX 78645-6042	https://stage.travis.prodigycad.com/property-detail/177151

396	177152	4907 GREEN SHORE CIR	TREVINO DALEE D	8111 JOY RD VOLENTE TX 78641-9651	https://stage.travis.prodigycad.com/property-detail/177152
397	177153	5001 GREEN SHORE CIR	LOFTUS MARK & SANDRA	5001 GREEN SHORE CIR LAGO VISTA TX 78645-6043	https://stage.travis.prodigycad.com/property-detail/177153
398	177154	5003 GREEN SHORE CIR	CARTER GINGER L	20106 TRAVIS DR JONESTOWN TX 78645-2451	https://stage.travis.prodigycad.com/property-detail/177154
399	177155	21201 GREEN SHORE CV	CITY OF LAGO VISTA	PO BOX 4727 LAGO VISTA TX 78645-0008	https://stage.travis.prodigycad.com/property-detail/177155
400	177156	21200 GREEN SHORE CV	CITY OF LAGO VISTA	PO BOX 4727 LAGO VISTA TX 78645-0008	https://stage.travis.prodigycad.com/property-detail/177156
401	177157	5007 GREEN SHORE CIR	CITY OF LAGO VISTA	PO BOX 4727 LAGO VISTA TX 78645-0008	https://stage.travis.prodigycad.com/property-detail/177157
402	177159	5011 GREEN SHORE CIR	LIVE OAK INVESTMENTS LLC	2906 QUAIL RUN DR ROUND ROCK TX USA 78681-1214	https://stage.travis.prodigycad.com/property-detail/177159
403	177162	COUNTRY CLUB DR	TRAVIS COUNTY MUD # 1	LAGO VISTA TX 78645	https://stage.travis.prodigycad.com/property-detail/177162
404	177163	GREEN SHORE CIR	LAGO VISTA PROP OWNERS ASSOC	PO BOX 4766 LAGO VISTA TX 78645-0008	https://stage.travis.prodigycad.com/property-detail/177163
405	177164	COUNTRY CLUB DR	CITY OF LAGO VISTA	PO BOX 4727 LAGO VISTA TX 78645-0008	https://stage.travis.prodigycad.com/property-detail/177164
406	177166	4905 COUNTRY CLUB DR	MAGUSIAK ALAN S	3727 TOP ROCK LN ROUND ROCK TX 78681-0901	https://stage.travis.prodigycad.com/property-detail/177166
407	177167	4907 COUNTRY CLUB DR	CAMPOS RAMON MONTIEL	501 E STASSNEY LN APT 817 AUSTIN TX 78745-3392	https://stage.travis.prodigycad.com/property-detail/177167
408	177168	5001 COUNTRY CLUB DR	ADHIKARI ISHWOR & KOMAL POKHAREL	7504 HARDY DR AUSTIN TX US 78757-1838	https://stage.travis.prodigycad.com/property-detail/177168
409	177169	5003 COUNTRY CLUB DR	BOGART SCOTT W & REGINA LEAL BOGART	5003 COUNTRY CLUB DR LAGO VISTA TX 78645-2219	https://stage.travis.prodigycad.com/property-detail/177169
410	177170	5005 COUNTRY CLUB DR	MBANK AUSTIN N A TRUSTEE	368 STONERIDGE VLG MYERSTOWN PA 17067-2210	https://stage.travis.prodigycad.com/property-detail/177170
411	177171	5007 COUNTRY CLUB DR	KOENIG DOYLE W & CHRISTI D RICKS	5101 COUNTRY CLUB DR LAGO VISTA TX 78645-6044	https://stage.travis.prodigycad.com/property-detail/177171
412	177172	5101 COUNTRY CLUB DR	KOENIG DOYLE & CHRISTI RICKS	5101 COUNTRY CLUB DR LAGO VISTA TX 78645-6044	https://stage.travis.prodigycad.com/property-detail/177172
413	177173	5103 COUNTRY CLUB DR	TUDTUD FELIPE & JOHANNA	17009 NORTHLAKE HILLS DR JONESTOWN TX 78645-4479	https://stage.travis.prodigycad.com/property-detail/177173
414	177176	5205 COUNTRY CLUB DR	KEMPF JOHN	3404 AMERICAN DR APT 2303 LAGO VISTA TX 78645-6547	https://stage.travis.prodigycad.com/property-detail/177176
415	177177	5207 COUNTRY CLUB DR	ALDAWWDI MAHER	143 ALBATROSS CV BUDA TX 78610-5046	https://stage.travis.prodigycad.com/property-detail/177177
416	177178	5209 COUNTRY CLUB DR	THIAGARAJAN VENKATESH	540 CASCADA LN ROUND ROCK TX USA 78681-1785	https://stage.travis.prodigycad.com/property-detail/177178
417	177179	5211 COUNTRY CLUB DR	VAUGHAN JOE E JR	PO BOX 34 TEMPLE NH 03084-0034	https://stage.travis.prodigycad.com/property-detail/177179
418	177180	5213 COUNTRY CLUB DR	BREWSTER SALLY	PO BOX 4982 LAGO VISTA TX 78645-0009	https://stage.travis.prodigycad.com/property-detail/177180
419	177181	5301 COUNTRY CLUB DR	TOLSON WANDA G	5301 COUNTRY CLUB DR LAGO VISTA TX 78645-5832	https://stage.travis.prodigycad.com/property-detail/177181
420	177182	5303 COUNTRY CLUB DR	HALCOM FOSTELENE	5303 COUNTRY CLUB DR LAGO VISTA TX 78645-5832	https://stage.travis.prodigycad.com/property-detail/177182
421	177183	5305 COUNTRY CLUB DR	MCMAHON GALE A	5305 COUNTRY CLUB DR LAGO VISTA TX 78645-5832	https://stage.travis.prodigycad.com/property-detail/177183
422	177184	5307 COUNTRY CLUB DR	WOLF VERA H	PO BOX 57 ROUND MOUNTAIN TX 78663-0057	https://stage.travis.prodigycad.com/property-detail/177184
423	177185	5401 COUNTRY CLUB DR	MCBRIDE LEONARD STANLEY & VALERIE LYNN	5401 COUNTRY CLUB DR LAGO VISTA TX 78645-5874	https://stage.travis.prodigycad.com/property-detail/177185
424	177187	5206 ARROWHEAD DR	WILLINGHAM DAVID A & NICHOLE STARR	5206 ARROWHEAD DR LAGO VISTA TX 78645-5896	https://stage.travis.prodigycad.com/property-detail/177187
425	177188	5204 ARROWHEAD DR	WILLINGHAM DAVID A & NICHOLE STARR	5206 ARROWHEAD DR LAGO VISTA TX 78645-5896	https://stage.travis.prodigycad.com/property-detail/177188
426	177189	5202 ARROWHEAD DR	WALKER WILLIAM L & KATHLEEN M	5200 ARROWHEAD DR LAGO VISTA TX US 78645-5896	https://stage.travis.prodigycad.com/property-detail/177189
427	177190	5200 ARROWHEAD DR	WALKER WILLIAM L III & KATHLEEN M	5200 ARROWHEAD DR LAGO VISTA TX 78645-5896	https://stage.travis.prodigycad.com/property-detail/177190
428	177191	5108 ARROWHEAD DR	NICHOLS DAVID M	5108 ARROWHEAD DR LAGO VISTA TX 78645-6005	https://stage.travis.prodigycad.com/property-detail/177191
429	177192	5106 ARROWHEAD DR	BECKCOM CHRISTOPHER & ROSANNE	5106 ARROWHEAD DR LAGO VISTA TX 78645-6005	https://stage.travis.prodigycad.com/property-detail/177192
430	177193	5104 ARROWHEAD DR	PELTIER DENNIS J & NANCY L	5104 ARROWHEAD DR LAGO VISTA TX 78645-6005	https://stage.travis.prodigycad.com/property-detail/177193
431	177194	5102 ARROWHEAD DR	YIU JOSEPH & VIRGINIA YIU	5102 ARROWHEAD DR LAGO VISTA TX 78645-6005	https://stage.travis.prodigycad.com/property-detail/177194
432	177195	5100 ARROWHEAD DR	WILSON LIVING TRUST	5100 ARROWHEAD DR LAGO VISTA TX US 78645-6005	https://stage.travis.prodigycad.com/property-detail/177195
433	177196	5004 ARROWHEAD DR	PETROSS TERESA CATHLEEN	5004 ARROWHEAD DR LAGO VISTA TX USA 78645-6084	https://stage.travis.prodigycad.com/property-detail/177196
434	177197	5002 ARROWHEAD DR	VISTA ESTATES LLC	4558 CAPE CHARLES DR PLANO TX 75024-7342	https://stage.travis.prodigycad.com/property-detail/177197
435	177221	21405 LAKEFRONT DR	THOMPSON JAMES L III	PO BOX 10796 AUSTIN TX 78766-1796	https://stage.travis.prodigycad.com/property-detail/177221
436	177222	21403 LAKEFRONT DR	HEIDER GENE M	21403 LAKEFRONT DR LAGO VISTA TX 78645-6116	https://stage.travis.prodigycad.com/property-detail/177222
439	177225	21561 LAKEFRONT DR	HART STEPHEN P & VIOLET E HART	21561 LAKEFRONT DR LAGO VISTA TX 78645-6128	https://stage.travis.prodigycad.com/property-detail/177225
440	177226	21559 LAKEFRONT DR	HOVAS JOHN P & DIANE	PO BOX 429 PATTISON TX 77466-0429	https://stage.travis.prodigycad.com/property-detail/177226
441	177227	21557 LAKEFRONT DR	EEDS GEORGE R & SUSAN M	21557 LAKEFRONT DR LAGO VISTA TX 78645-6128	https://stage.travis.prodigycad.com/property-detail/177227
442	178146	21005 SEMINOLE	VAN DEN BERG TANIA & DANIL J H	51 S BUTCH ARTHUR RD CLEVELAND TX US 77328-7821	https://stage.travis.prodigycad.com/property-detail/178146
443	178147	21003 SEMINOLE	CARMEN'S MARFA HOLDING LLC	1101 THE HIGH RD AUSTIN TX 78746-2226	https://stage.travis.prodigycad.com/property-detail/178147
444	178148	21001 SEMINOLE	CARMENS MARFA HOLDINGS LLC	1101 THE HIGH RD AUSTIN TX 78746-2226	https://stage.travis.prodigycad.com/property-detail/178148
445	178149	21009 SEMINOLE	ALSULTANI BASHAR T ETAL	12405 ALAMEDA TRACE CIR AUSTIN TX 78727-6441	https://stage.travis.prodigycad.com/property-detail/178149
446	178150	21007 SEMINOLE	AREZEHGAR SHAESTEH	2703 GREENLEE DR AUSTIN TX 78703-1611	https://stage.travis.prodigycad.com/property-detail/178150
447	361064	4501 NETTLE LN	GOODWIN FLOYD T & JACKLYN F	4501 NETTLE LN LAGO VISTA TX 78645-6219	https://stage.travis.prodigycad.com/property-detail/361064
448	424624	3947 OUTPOST TRCE	DONNELLAN BERNIECE ELAINE	3947 OUTPOST TRCE LAGO VISTA TX 78645-6244	https://stage.travis.prodigycad.com/property-detail/424624
449	424762	SEMINOLE DR	CITY OF LAGO VISTA	PO BOX 4727 LAGO VISTA TX 78645-0008	https://stage.travis.prodigycad.com/property-detail/424762
450	458291	4054 OUTPOST TRACE	TEXAS LONESTAR DIAMOND LLC	1131 W 18TH ST HOUSTON TX 77008-3340	https://stage.travis.prodigycad.com/property-detail/458291
452	458378	21106 NATIONAL DR	CITY OF LAGO VISTA	PO BOX 4727 LAGO VISTA TX 78645-0008	https://stage.travis.prodigycad.com/property-detail/458378
453	475820	5403 COUNTRY CLUB DR	RAGAZZO MARIA EVE & RAFAEL RAGAZZO	20569 HIGHLAND LAKE DR LAGO VISTA TX US 78645-6634	https://stage.travis.prodigycad.com/property-detail/475820
454	475821	5208 ARROWHEAD DR	ASSEMI JULIET ROSE & KENNETH ASSEMI	5210 ARROWHEAD DR LAGO VISTA TX 78645	https://stage.travis.prodigycad.com/property-detail/475821
455	543303	4088 OUTPOST TRACE	TASSIN MARK R & GENEVA TAYLOR TASSIN	4088 OUTPOST TRACE LAGO VISTA TX 78645-6462	https://stage.travis.prodigycad.com/property-detail/543303
456	565789	OUTPOST TRACE	CITY OF LAGO VISTA	PO BOX 4727 LAGO VISTA TX 78645-0008	https://stage.travis.prodigycad.com/property-detail/565789
457	565788	OUTPOST TRACE	CITY OF LAGO VISTA	PO BOX 4727 LAGO VISTA TX 78645-0008	https://stage.travis.prodigycad.com/property-detail/565788
458	565894	OUTPOST TRACE	CITY OF LAGO VISTA	PO BOX 4727 LAGO VISTA TX 78645-0008	https://stage.travis.prodigycad.com/property-detail/565894
459	565898	LAKE PARK DR	DARK STEPHEN & CHELSEA DARK	1301 GREENFIELD DR CEDAR PARK TX USA 78613-5805	https://stage.travis.prodigycad.com/property-detail/565898

460	565985	TURNBACK	CITY OF LAGO VISTA	PO BOX 4727 LAGO VISTA TX 78645-0008	https://stage.travis.prodigycad.com/property-detail/565985
461	566202	ARROWHEAD DR	CITY OF LAGO VISTA	PO BOX 4727 LAGO VISTA TX 78645-0008	https://stage.travis.prodigycad.com/property-detail/566202
462	566203	ARROWHEAD DR	CITY OF LAGO VISTA	PO BOX 4727 LAGO VISTA TX 78645-0008	https://stage.travis.prodigycad.com/property-detail/566203
463	566295	SEMINOLE	CITY OF LAGO VISTA	PO BOX 4727 LAGO VISTA TX 78645-0008	https://stage.travis.prodigycad.com/property-detail/566295
466	727354	5100 CANYON OAKS DR	CANYON OAKS HOMEOWNERS ASSOCIATION INC	5204 CANYON OAKS DR LAGO VISTA TX 78645-6089	https://stage.travis.prodigycad.com/property-detail/727354
467	727355	CANYON OAKS DR	CANYON OAKS HOMEOWNERS ASSOCIATION INC	5204 CANYON OAKS DR LAGO VISTA TX 78645-6089	https://stage.travis.prodigycad.com/property-detail/727355
468	727356	CANYON OAKS DR	CANYON OAKS HOMEOWNERS ASSOCIATION INC	5204 CANYON OAKS DR LAGO VISTA TX 78645-6089	https://stage.travis.prodigycad.com/property-detail/727356
469	727357	CANYON OAKS DR	CANYON OAKS HOMEOWNERS ASSOCIATION INC	5204 CANYON OAKS DR LAGO VISTA TX 78645-6089	https://stage.travis.prodigycad.com/property-detail/727357
470	727358	CANYON OAKS DR	CANYON OAKS HOMEOWNERS ASSOCIATION INC	5204 CANYON OAKS DR LAGO VISTA TX 78645-6089	https://stage.travis.prodigycad.com/property-detail/727358
471	727359	CANYON OAKS DR	CANYON OAKS HOMEOWNERS ASSOCIATION INC	5204 CANYON OAKS DR LAGO VISTA TX 78645-6089	https://stage.travis.prodigycad.com/property-detail/727359
472	755076	4504 OUTPOST TRACE	DHANANJAYAM SELVAPATHI & VIJAYALAKSHMI MOHANAN	9508 LISI ANNE DR AUSTIN TX 78717-3883	https://stage.travis.prodigycad.com/property-detail/755076
473	784571	20903 TOMAHAWK ST	MCCARTY RANDAL F & MARY L	20903 TOMAHAWK ST LAGO VISTA TX 78645-6050	https://stage.travis.prodigycad.com/property-detail/784571
474	796836	4064 OUTPOST TRCE	SAVAGE BARRY & KATHRYN KELLEY	4064 OUTPOST TRCE LAGO VISTA TX 78645-6456	https://stage.travis.prodigycad.com/property-detail/796836
475	806873	4082 OUTPOST TRCE	BLOMQUIST FAMILY REVOCABLE LIVING	4082 OUTPOST TRCE LAGO VISTA TX 78645-6462	https://stage.travis.prodigycad.com/property-detail/806873
476	819817	4133 ROCKWOOD	HOOD CHRISTOPHER & KRISSY	4133 ROCKWOOD LAGO VISTA TX 78645-6430	https://stage.travis.prodigycad.com/property-detail/819817
477	840893	4705 NAVAJO CV	BAYER GERALD FREDERICK & MARSHA NELL LIVING TRUST	4705 NAVAJO CV LAGO VISTA TX 78645-6062	https://stage.travis.prodigycad.com/property-detail/840893
478	846530	21007 TWISTING TRAIL	SMITH ROBIN A	21007 TWISTING TRAIL LAGO VISTA TX 78645-6440	https://stage.travis.prodigycad.com/property-detail/846530
479	894637	4008 ROCKWOOD DR	BUTLER DAVID A & JANICE	4008 ROCKWOOD DR LAGO VISTA TX 78645-6426	https://stage.travis.prodigycad.com/property-detail/894637
480	909323	20801 GREENPARK DR	HOLOUBEK JOHN C & ELIZABETH D	20801 GREENPARK DR LAGO VISTA TX 78645-2378	https://stage.travis.prodigycad.com/property-detail/909323
481	911504	LAKEFRONT DR	ROHNE DEAN M & JENNIFER L	21461 LAKEFRONT DR LAGO VISTA TX 78645-6121	https://stage.travis.prodigycad.com/property-detail/911504
482	921561	21657 HIGH DRIVE	RAY DENNIS MATTHEW & LETITIA ANN	21657 HIGH DRIVE LAGO VISTA TX USA 78645-6512	https://stage.travis.prodigycad.com/property-detail/921561
483	946336	21001 GREENPARK DR	ELLIOTT MICHAEL & BRENDA	21001 GREENPARK DR LAGO VISTA TX 78645-6401	https://stage.travis.prodigycad.com/property-detail/946336
484	950698	5105 COUNTRY CLUB DR	JONES ROBERT ANWELL	5105 COUNTRY CLUB DR LAGO VISTA TX US 78645-6044	https://stage.travis.prodigycad.com/property-detail/950698
485	967444	GREEN PARK DR	MONACO STEVEN	20803 GREENPARK DR LAGO VISTA TX USA 78645-2378	https://stage.travis.prodigycad.com/property-detail/967444
486	967860	ROCKWOOD DR	MACKAY STUART & JUDY MACKAY	4129 ROCKWOOD DR LAGO VISTA TX 78645-6430	https://stage.travis.prodigycad.com/property-detail/967860
487	967948	COUNTRY CLUB DR	RANICK RONALD	5104 COUNTRY CLUB DR LAGO VISTA TX 78645-6026	https://stage.travis.prodigycad.com/property-detail/967948
488	968096	21010 STONE CLIFF DR	BLU OCEAN DEVELOPMENT CORPORATION	PO BOX 4954 LAGO VISTA TX 78645-0009	https://stage.travis.prodigycad.com/property-detail/968096
489	968689	GREENPARK DR	WHEATLEY KRISTEN G & GREG G	21101 GREENPARK DR LAGO VISTA TX 78645-6423	https://stage.travis.prodigycad.com/property-detail/968689
490	175479	4176 TURNBACK	WHEELER JENNIFER	4800 TURNBACK ST LAGO VISTA TX 78645-6037	https://stage.travis.prodigycad.com/property-detail/175479

TEXAS COMMISSION ON ENVIRONMENTAL QUALITY

SUMMARY OF APPLICATION IN PLAIN LANGUAGE FOR TPDES OR TLAP PERMIT APPLICATIONS

Summary of Application (in plain language) Template and Instructions for Texas Pollutant Discharge Elimination System (TPDES) and Texas Land Application (TLAP) Permit Applications

Applicants should use this template to develop a plain language summary of your facility and application as required by Title 30, Texas Administrative Code (30 TAC), Chapter 39, Subchapter H. You may modify the template as necessary to accurately describe your facility as long as the summary includes the following information: (1) the function of the proposed plant or facility; (2) the expected output of the proposed plant or facility; (3) the expected pollutants that may be emitted or discharged by the proposed plant or facility; and (4) how you will control those pollutants, so that the proposed plant will not have an adverse impact on human health or the environment.

Fill in the highlighted areas below to describe your facility and application in plain language. Instructions and examples are provided below. Make any other edits necessary to improve readability or grammar and to comply with the rule requirements. After filling in the information for your facility delete these instructions.

If you are subject to the alternative language notice requirements in 30 TAC Section 39.426, **you must provide a translated copy of the completed plain language summary in the appropriate alternative language as part of your application package**. For your convenience, a Spanish template has been provided below.

ENGLISH TEMPLATE FOR TPDES or TLAP NEW/RENEWAL/AMENDMENT APPLICATIONS DOMESTIC WASTEWATER/STORMWATER

The following summary is provided for this pending water quality permit application being reviewed by the Texas Commission on Environmental Quality as required by 30 TAC Chapter 39. The information provided in this summary may change during the technical review of the application and is not a federal enforceable representation of the permit application.

The City of Lago Vista (CN600622849) operates the City of Lago Vista Wastewater Treatment Plant (RN101609683), a complete mixed activated sludge system with chlorine disinfection. The facility is located at 21011 Seminole Dr, in Lago Vista, Travis County, Texas 78645. The City is requesting a major amendment to its Texas Land Application Permit (TLAP No. WQ001752001) for the existing public wastewater supply system. The requested amendment would authorize the discharge of domestic wastewater at an annual average flow of effluent shall not exceed 1.0 MGD in the Interim Phase (Current) and 1.5 MGD in the Final Phase to accommodate anticipated growth and increased service requirements.This permit amendment will not authorize a discharge of pollutants into water in the state.

Discharges from the facility are expected to contain five-day carbonaceous biochemical oxygen demand (CBOD5), total suspended solids (TSS), ammonia nitrogen (NH3-N), Total Phosphorus (TP), Hydrogen Peroxide and Escherichia coli. Additional potential pollutants are

included in the Domestic Technical Report 1.0, Section 7. Pollutant Analysis of Treated Effluent in the permit application package. Domestic wastewater is treated by a complete mixed activated sludge system with treatment units including, headworks (bar screen and grit chamber), equalization basin, aeration basins, secondary clarifiers, chlorine contact chambers, and Parshall Flume. Waste sludge is thickened and dewatered by a belt filter press before being hauled off-site by a sludge truck.

PLANTILLA EN ESPAÑOL PARA SOLICITUDES NUEVAS/RENOVACIONES/ENMIENDAS DE TPDES o TLAP

AGUAS RESIDUALES DOMÉSTICAS /AGUAS PLUVIALES

El siguiente resumen se proporciona para esta solicitud de permiso de calidad del agua pendiente que está siendo revisada por la Comisión de Calidad Ambiental de Texas según lo requerido por el Capítulo 39 del Código Administrativo de Texas 30. La información proporcionada en este resumen puede cambiar durante la revisión técnica de la solicitud y no es una representación ejecutiva fedérale de la solicitud de permiso.

La cuidad de Lago Vista (CN600622849) opera Lago Vista Wastewater Treatment Plant (RN101609683), un sistema de lodo activado completamente mezclado con desinfección con cloro. La instalación está ubicada en 21011 Seminole Dr, en Lago Vista, Condado de Travis, Texas 78645. La cuidad de Lago Vista está solicitando una enmienda mayor a su permiso (TLAP No. WQ001752001) para el sistema público de aguas residuales existente. La enmienda solicitada autorizaría la descarga de aguas residuales domésticas con un flujo promedio anual de efluentes que no exceda 1.0 millones de galones por día (MGD) en la fase intermedia (actual) y 1.5 MGD en la fase final, con el fin de atender el crecimiento anticipado y el aumento en los requerimientos de servicio. Este permiso no autorizará una descarga de contaminantes en el agua en el estado.

Se espera que las descargas de la instalación contengan demanda bioquímica de oxígeno carbonáceo de cinco días, sólidos suspendidos totales, nitrógeno amoniacal, fósforo total, peróxido de hidrógeno y Escherichia coli. Contaminantes adicionales potenciales se incluyen en Domestic Technical Report 1.0, Section 7. Pollutant Analysis of Treated Effluent en el paquete de solicitud de permiso. Las aguas residuales domésticas. están tratado por por un sistema de lodo activado completamente mezclado con unidades de tratamiento que incluyen: obras de entrada (criba y cámara de arena), estanque de igualación, estanques de aireación, clarificadores secundarios, cámaras de contacto con cloro y flume Parshall. Los lodos residuales se espesan y deshidratan mediante un filtro prensa de banda antes de ser retirados con un camión de transporte de lodos.