Administrative Package Cover Page

This file contains the following documents:

1. Summary of application (in plain language)
   - English
   - Alternative Language (Spanish)
2. First Notice (NORI-Notice of Receipt of Application and Intent to Obtain a Permit)
   - English
   - Alternative Language (Spanish)
3. Application materials

Portada de Paquete Administrativo

Este archivo contiene los siguientes documentos:

1. Resumen en lenguaje sencillo (PLS, por sus siglas en inglés) de la actividad propuesta
   - Inglés
   - Idioma alternativo (español)
2. Primer aviso (NORI, el Aviso de Recepción de Solicitud e Intención de Obtener un Permiso)
   - Inglés
   - Idioma alternativo (español)
3. Solicitud original

TEXAS COMMISSION ON ENVIRONMENTAL QUALITY

PLAIN LANGUAGE SUMMARY FOR TPDES OR TLAP PERMIT APPLICATIONS

Plain Language Summary Template and Instructions for Texas Pollutant Discharge Elimination System (TPDES) and Texas Land Application (TLAP) Permit Applications

Applicants should use this template to develop a plain language summary as required by Title 30, Texas Administrative Code (30 TAC), Chapter 39, Subchapter H. Applicants may modify the template as necessary to accurately describe their facility as long as the summary includes the following information: (1) the function of the proposed plant or facility; (2) the expected output of the proposed plant or facility; (3) the expected pollutants that may be emitted or discharged by the proposed plant or facility; and (4) how the applicant will control those pollutants, so that the proposed plant will not have an adverse impact on human health or the environment.

Fill in the highlighted areas below to describe your facility and application in plain language. Instructions and examples are provided below. Make any other edits necessary to improve readability or grammar and to comply with the rule requirements.

If you are subject to the alternative language notice requirements in 30 TAC Section 39.426, **you must provide a translated copy of the completed plain language summary in the appropriate alternative language as part of your application package**. For your convenience, a Spanish template has been provided below.

ENGLISH TEMPLATE FOR TPDES or TLAP NEW/RENEWAL/AMENDMENT APPLICATIONS DOMESTIC WASTEWATER/STORMWATER

The following summary is provided for this pending water quality permit application being reviewed by the Texas Commission on Environmental Quality as required by 30 TAC Chapter 39. The information provided in this summary may change during the technical review of the application and is not a federal enforceable representation of the permit application.

The City of Castroville (CN600647614) operates the City of Castroville Wastewater Treatment Facility (RN101721645), a domestic wastewater treatment plant. The facility is located at 818 Alsace Avenue, in Castroville, Medina County, Texas 78009. This application is for a renewal to discharge treated domestic wastewater effluent at a daily average flow not to exceed 0.70 MGD via Outfall 002 (discharge to a drainage swale, thence to Medina River).

Discharges from the facility are expected to contain Carbonaceous Biochemical Oxygen Demand ($CBOD_5$), Total Suspended Solids (TSS), Ammonia Nitrogen (NH_3-N), Total Phosphorus, and Escherichia coli. Domestic wastewater is treated by the following process. Wastewater enters the treatment plant through a drum screen where primary solids are removed through a screw conveyor. The flow stream continues to an activated sludge carousel operating in complete mix mode. Flow from the oxidation ditch proceeds to a clarifier where suspended solids are removed from the flow stream. Solids from the clarifier are stored in the sludge holding basin before they are dewatered in the sludge screw press. The dewatered sludge is

trucked off to a landfill. Clarified effluent continues to a disc cloth filter where suspended solids are strained from the effluent as a polishing step of the treatment, and then to a chlorine contact chamber where the effluent is disinfected before it is discharged into a drainage swale which goes to Medina River.

PLANTILLA EN ESPAÑOL PARA SOLICITUDES NUEVAS/RENOVACIONES/ENMIENDAS DE TPDES o TLAP

AGUAS RESIDUALES DOMÉSTICAS /AGUAS PLUVIALES

El siguiente resumen se proporciona para esta solicitud de permiso de calidad del agua pendiente que está siendo revisada por la Comisión de Calidad Ambiental de Texas según lo requerido por el Capítulo 39 del Código Administrativo de Texas 30. La información proporcionada en este resumen puede cambiar durante la revisión técnica de la solicitud y no es una representación ejecutiva fedérale de la solicitud de permiso.

La Ciudad de Castroville (CN600647614) opera la Planta de Tratamiento de Aguas Residuales de la Ciudad de Castroville (RN101721645), una planta de tratamiento de aguas residuales domésticas. La instalación está ubicada en 818 Alsace Avenue, en La Ciudad de Castroville, Condado de Medina, Texas 78009. Esta solicitud es para una renovación de descarga de efluente de aguas residuales domésticas tratadas con un caudal promedio diario que no exceda los 0.70 MGD a través del punto de descarga 002 (descarga a un canal de drenaje, y luego al río Medina).

Se espera que las descargas de la instalación contengan Demanda Bioquímica de Oxígeno Carbonáceo (CBOD5), Sólidos Suspendidos Totales (TSS), Nitrógeno Amoniacal (NH3-N), Fósforo Total, y Escherichia coli.. Aguas residuales domésticas. está tratado por mediante el siguiente proceso. Las aguas residuales ingresan a la planta de tratamiento a través de una criba de tambor donde los sólidos primarios se eliminan mediante un transportador de tornillo. La corriente de flujo continúa hacia un carrusel de lodos activados que opera en modo de mezcla completa. El flujo del canal de oxidación pasa a un clarificador donde se eliminan los sólidos en suspensión de la corriente de flujo. Los sólidos del clarificador se almacenan en la balsa de retención de lodos antes de ser deshidratados en una prensa de tornillo para lodos. Los lodos deshidratados se transportan en camiones a un vertedero. El efluente clarificado continúa hacia un filtro de tela de disco, donde se filtran los sólidos en suspensión del efluente como un paso de pulido del tratamiento, y luego a una cámara de contacto con cloro donde se desinfecta el efluente antes de ser descargado en un canal de drenaje que desemboca en el río Medina.

TEXAS COMMISSION ON ENVIRONMENTAL QUALITY

NOTICE OF RECEIPT OF APPLICATION AND INTENT TO OBTAIN WATER QUALITY PERMIT RENEWAL

PERMIT NO. WQ0010952001

APPLICATION. City of Castroville, 1209 Fiorella Street, Castroville, Texas 78009, has applied to the Texas Commission on Environmental Quality (TCEQ) to renew Texas Pollutant Discharge Elimination System (TPDES) Permit No. WQ0010952001 (EPA I.D. No. TX0129364) to authorize the discharge of treated wastewater at a volume not to exceed a daily average flow of 700,000 gallons per day. The domestic wastewater treatment facility is located at 818 Alsace Avenue, in the city of Castroville, in Medina County, Texas 78009. The discharge route is from the plant site to an unnamed natural drainage swale; thence to Medina River Below Medina Diversion Lake. TCEQ received this application on November 7, 2024. The permit application will be available for viewing and copying at Castroville City Hall, 1st floor, 1209 Fiorella Street, Castroville, Texas prior to the date this notice is published in the newspaper. The application, including any updates, and associated notices are available electronically at the following webpage: https://www.tceq.texas.gov/permitting/wastewater/pending-permits/tpdes-applications. This link to an electronic map of the site or facility's general location is provided as a public courtesy and not part of the application or notice. For the exact location, refer to the application. https://gisweb.tceq.texas.gov/LocationMapper/?marker=-98.884166,29.343888&level=18

ALTERNATIVE LANGUAGE NOTICE. Alternative language notice in Spanish is available at: https://www.tceq.texas.gov/permitting/wastewater/pending-permits/tpdes-applications. El aviso de idioma alternativo en español está disponible en https://www.tceq.texas.gov/permitting/wastewater/pending-permits/tpdes-applications.

ADDITIONAL NOTICE. TCEQ's Executive Director has determined the application is administratively complete and will conduct a technical review of the application. After technical review of the application is complete, the Executive Director may prepare a draft permit and will issue a preliminary decision on the application. **Notice of the Application and Preliminary Decision will be published and mailed to those who are on the county-wide mailing list and to those who are on the mailing list for this application. That notice will contain the deadline for submitting public comments.**

PUBLIC COMMENT / PUBLIC MEETING. You may submit public comments or request a public meeting on this application. The purpose of a public meeting is to provide the opportunity to submit comments or to ask questions about the application. TCEQ will hold a public meeting if the Executive Director determines that there is a significant degree of public

interest in the application or if requested by a local legislator. A public meeting is not a contested case hearing.

OPPORTUNITY FOR A CONTESTED CASE HEARING. After the deadline for submitting public comments, the Executive Director will consider all timely comments and prepare a response to all relevant and material, or significant public comments. **Unless the application is directly referred for a contested case hearing, the response to comments, and the Executive Director's decision on the application, will be mailed to everyone who submitted public comments and to those persons who are on the mailing list for this application. If comments are received, the mailing will also provide instructions for requesting reconsideration of the Executive Director's decision and for requesting a contested case hearing.** A contested case hearing is a legal proceeding similar to a civil trial in state district court.

TO REQUEST A CONTESTED CASE HEARING, YOU MUST INCLUDE THE FOLLOWING ITEMS IN YOUR REQUEST: your name, address, phone number; applicant's name and proposed permit number; the location and distance of your property/activities relative to the proposed facility; a specific description of how you would be adversely affected by the facility in a way not common to the general public; a list of all disputed issues of fact that you submit during the comment period and, the statement "[I/we] request a contested case hearing." If the request for contested case hearing is filed on behalf of a group or association, the request must designate the group's representative for receiving future correspondence; identify by name and physical address an individual member of the group who would be adversely affected by the proposed facility or activity; provide the information discussed above regarding the affected member's location and distance from the facility or activity; explain how and why the member would be affected; and explain how the interests the group seeks to protect are relevant to the group's purpose.

Following the close of all applicable comment and request periods, the Executive Director will forward the application and any requests for reconsideration or for a contested case hearing to the TCEQ Commissioners for their consideration at a scheduled Commission meeting.

The Commission may only grant a request for a contested case hearing on issues the requestor submitted in their timely comments that were not subsequently withdrawn. **If a hearing is granted, the subject of a hearing will be limited to disputed issues of fact or mixed questions of fact and law relating to relevant and material water quality concerns submitted during the comment period.**

TCEQ may act on an application to renew a permit for discharge of wastewater without providing an opportunity for a contested case hearing if certain criteria are met.

MAILING LIST. If you submit public comments, a request for a contested case hearing or a reconsideration of the Executive Director's decision, you will be added to the mailing list for this specific application to receive future public notices mailed by the Office of the Chief Clerk. In addition, you may request to be placed on: (1) the permanent mailing list for a specific applicant name and permit number; and/or (2) the mailing list for a specific county. If you wish to be placed on the permanent and/or the county mailing list, clearly specify which list(s) and send your request to TCEQ Office of the Chief Clerk at the address below.

INFORMATION AVAILABLE ONLINE. For details about the status of the application, visit the Commissioners' Integrated Database at www.tceq.texas.gov/goto/cid. Search the database using the permit number for this application, which is provided at the top of this notice.

AGENCY CONTACTS AND INFORMATION. All public comments and requests must be submitted either electronically at **https://www14.tceq.texas.gov/epic/eComment/**, or in writing to the Texas Commission on Environmental Quality, Office of the Chief Clerk, MC-105, P.O. Box 13087, Austin, Texas 78711-3087. Please be aware that any contact information you provide, including your name, phone number, email address and physical address will become part of the agency's public record. For more information about this permit application or the permitting process, please call the TCEQ Public Education Program, Toll Free, at 1-800-687-4040 or visit their website at www.tceq.texas.gov/goto/pep. Si desea información en Español, puede llamar al 1-800-687-4040.

Further information may also be obtained from City of Castroville at the address stated above or by calling Mr. Ricardo Carrasco, Assistant Director of Public Works, at 830-931-4090.

Issuance Date: November 19, 2024

Comisión de Calidad Ambiental del Estado de Texas

AVISO DE RECIBO DE LA SOLICITUD Y
EL INTENTO DE OBTENER PERMISO PARA LA CALIDAD DEL AGUA
RENOVACION

PERMISO NO. WQ0010952001

SOLICITUD. La Ciudad de Castroville, 1209 Calle Fiorella, Castroville, Texas 78009 ha solicitado a la Comisión de Calidad Ambiental del Estado de Texas (TCEQ) para renovar el Permiso No. WQ0010952001 (EPA I.D. No. TX0129364) del Sistema de Eliminación de Descargas de Contaminantes de Texas (TPDES) para autorizar la descarga de aguas residuales tratadas en un volumen que no sobrepasa un flujo promedio diario de 700,000 galones por día. La planta está ubicada 818 Alsace Avenue, en La Ciudad de Castroville en el Condado de Medina, Texas 78009. La ruta de descarga es del sitio de la planta a una depresión natural de drenaje sin nombre; de allí al Río Medina, debajo del Lago de Desviación de Medina. La TCEQ recibió esta solicitud el 7 de noviembre de 2024. La solicitud para el permiso está disponible para leerla y copiarla en Ayuntamiento de Castroville, 1er piso, 1209 Calle Fiorella, Castroville, Texas. La solicitud (cualquier actualización y aviso inclusive) está disponible electrónicamente en la siguiente página web: https://www.tceq.texas.gov/permitting/wastewater/pending-permits/tpdes-applications. Este enlace a un mapa electrónico de la ubicación general del sitio o de la instalación es proporcionado como una cortesía y no es parte de la solicitud o del aviso. Para la ubicación exacta, consulte la solicitud. https://gisweb.tceq.texas.gov/LocationMapper/?marker=-98.884166,29.343888&level=18

AVISO ADICIONAL. El Director Ejecutivo de la TCEQ ha determinado que la solicitud es administrativamente completa y conducirá una revisión técnica de la solicitud. Después de completar la revisión técnica, el Director Ejecutivo puede preparar un borrador del permiso y emitirá una Decisión Preliminar sobre la solicitud. **El aviso de la solicitud y la decisión preliminar serán publicados y enviado a los que están en la lista de correo de las personas a lo largo del condado que desean recibir los avisos y los que están en la lista de correo que desean recibir avisos de esta solicitud. El aviso dará la fecha límite para someter comentarios públicos.**

COMENTARIO PUBLICO / REUNION PUBLICA. Usted puede presentar comentarios públicos o pedir una reunión pública sobre esta solicitud. El propósito de una reunión pública es dar la oportunidad de presentar comentarios o

hacer preguntas acerca de la solicitud. La TCEQ realiza una reunión pública si el Director Ejecutivo determina que hay un grado de interés público suficiente en la solicitud o si un legislador local lo pide. Una reunión pública no es una audiencia administrativa de lo contencioso.

OPORTUNIDAD DE UNA AUDIENCIA ADMINISTRATIVA DE LO CONTENCIOSO. Después del plazo para presentar comentarios públicos, el Director Ejecutivo considerará todos los comentarios apropiados y preparará una respuesta a todo los comentarios públicos esenciales, pertinentes, o significativos. **A menos que la solicitud haya sido referida directamente a una audiencia administrativa de lo contencioso, la respuesta a los comentarios y la decisión del Director Ejecutivo sobre la solicitud serán enviados por correo a todos los que presentaron un comentario público y a las personas que están en la lista para recibir avisos sobre esta solicitud. Si se reciben comentarios, el aviso también proveerá instrucciones para pedir una reconsideración de la decisión del Director Ejecutivo y para pedir una audiencia administrativa de lo contencioso.** Una audiencia administrativa de lo contencioso es un procedimiento legal similar a un procedimiento legal civil en un tribunal de distrito del estado.

PARA SOLICITAR UNA AUDIENCIA DE CASO IMPUGNADO, USTED DEBE INCLUIR EN SU SOLICITUD LOS SIGUIENTES DATOS: su nombre, dirección, y número de teléfono; el nombre del solicitante y número del permiso; la ubicación y distancia de su propiedad/actividad con respecto a la instalación; una descripción específica de la forma cómo usted sería afectado adversamente por el sitio de una manera no común al público en general; una lista de todas las cuestiones de hecho en disputa que usted presente durante el período de comentarios; y la declaración "[Yo/nosotros] solicito/solicitamos una audiencia de caso impugnado". Si presenta la petición para una audiencia de caso impugnado de parte de un grupo o asociación, debe identificar una persona que representa al grupo para recibir correspondencia en el futuro; identificar el nombre y la dirección de un miembro del grupo que sería afectado adversamente por la planta o la actividad propuesta; proveer la información indicada anteriormente con respecto a la ubicación del miembro afectado y su distancia de la planta o actividad propuesta; explicar cómo y porqué el miembro sería afectado; y explicar cómo los intereses que el grupo desea proteger son pertinentes al propósito del grupo.

Después del cierre de todos los períodos de comentarios y de petición que aplican, el Director Ejecutivo enviará la solicitud y cualquier petición para reconsideración o para una audiencia de caso impugnado a los Comisionados de la TCEQ para su consideración durante una reunión programada de la Comisión. La Comisión sólo puede conceder una solicitud de una audiencia de caso impugnado sobre los temas que el solicitante haya presentado en sus comentarios oportunos que no fueron retirados posteriormente. Si se concede una audiencia, el tema de la audiencia estará limitado a cuestiones de hecho en disputa o cuestiones mixtas de hecho y de derecho relacionadas a intereses pertinentes y materiales de calidad del agua que

se hayan presentado durante el período de comentarios. Si ciertos criterios se cumplen, la TCEQ puede actuar sobre una solicitud para renovar un permiso sin proveer una oportunidad de una audiencia administrativa de lo contencioso.

LISTA DE CORREO. Si somete comentarios públicos, un pedido para una audiencia administrativa de lo contencioso o una reconsideración de la decisión del Director Ejecutivo, la Oficina del Secretario Principal enviará por correo los avisos públicos en relación con la solicitud. Ademas, puede pedir que la TCEQ ponga su nombre en una or mas de las listas correos siguientes (1) la lista de correo permanente para recibir los avisos de el solicitante indicado por nombre y número del permiso específico y/o (2) la lista de correo de todas las solicitudes en un condado especifico. Si desea que se agrega su nombre en una de las listas designe cual lista(s) y envia por correo su pedido a la Oficina del Secretario Principal de la TCEQ.

CONTACTOS E INFORMACIÓN DE LA TCEQ. Todos los comentarios escritos del público y los para pedidos una reunión deben ser presentados a la Oficina del Secretario Principal, MC 105, TCEQ, P.O. Box 13087, Austin, TX 78711-3087 o por el internet at www.tceq.texas.gov/about/comments.html. Tenga en cuenta que cualquier información personal que usted proporcione, incluyendo su nombre, número de teléfono, dirección de correo electrónico y dirección física pasarán a formar parte del registro público de la Agencia. Si necesita más información en Español sobre esta solicitud para un permiso o el proceso del permiso, por favor llame a El Programa de Educación Pública de la TCEQ, sin cobro, al 1-800-687-4040. La información general sobre la TCEQ puede ser encontrada en nuestro sitio de la red: www.tceq.texas.gov.

También se puede obtener información adicional del Ciudad de Castroville a la dirección indicada arriba o llamando a Ricardo Carrasco al 830-931-4090.

Fecha de emisión 19 de noviembre de 2024

TEXAS COMMISSION ON ENVIRONMENTAL QUALITY

DOMESTIC WASTEWATER PERMIT APPLICATION CHECKLIST

Complete and submit this checklist with the application.

APPLICANT NAME: City of Castroville

PERMIT NUMBER (If new, leave blank): WQ00 10952001

Indicate if each of the following items is included in your application.

	Y	N		Y	N
Administrative Report 1.0	☒	☐	Original USGS Map	☒	☐
Administrative Report 1.1	☐	☒	Affected Landowners Map	☐	☒
SPIF	☒	☐	Landowner Disk or Labels	☐	☒
Core Data Form	☒	☐	Buffer Zone Map	☐	☒
Public Involvement Plan Form	☐	☒	Flow Diagram	☒	☐
Technical Report 1.0	☒	☐	Site Drawing	☒	☐
Technical Report 1.1	☐	☒	Original Photographs	☐	☒
Worksheet 2.0	☒	☐	Design Calculations	☐	☒
Worksheet 2.1	☐	☒	Solids Management Plan	☐	☒
Worksheet 3.0	☐	☒	Water Balance	☐	☒
Worksheet 3.1	☐	☒			
Worksheet 3.2	☐	☒			
Worksheet 3.3	☐	☒			
Worksheet 4.0	☐	☒			
Worksheet 5.0	☐	☒			
Worksheet 6.0	☒	☐			
Worksheet 7.0	☐	☒			

For TCEQ Use Only

Segment Number _____County _____
Expiration Date _____Region_____
Permit Number _____

TEXAS COMMISSION ON ENVIRONMENTAL QUALITY

DOMESTIC WASTEWATER PERMIT APPLICATION ADMINISTRATIVE REPORT 1.0

For any questions about this form, please contact the Applications Review and Processing Team at 512-239-4671.

Section 1. Application Fees (Instructions Page 26)

Indicate the amount submitted for the application fee (check only one).

Flow	New/Major Amendment	Renewal
<0.05 MGD	$350.00 ☐	$315.00 ☐
≥0.05 but <0.10 MGD	$550.00 ☐	$515.00 ☐
≥0.10 but <0.25 MGD	$850.00 ☐	$815.00 ☐
≥0.25 but <0.50 MGD	$1,250.00 ☐	$1,215.00 ☐
≥0.50 but <1.0 MGD	$1,650.00 ☐	$1,615.00 ☒
≥1.0 MGD	$2,050.00 ☐	$2,015.00 ☐

Minor Amendment (for any flow) $150.00 ☒

Payment Information:

Mailed — Check/Money Order Number: N/A

Check/Money Order Amount: N/A

Name Printed on Check: N/A

EPAY — Voucher Number: 729432, 729433, 729434, 729435

Copy of Payment Voucher enclosed? Yes ☒

Section 2. Type of Application (Instructions Page 26)

a. Check the box next to the appropriate authorization type.

☒ Publicly-Owned Domestic Wastewater

☐ Privately-Owned Domestic Wastewater

☐ Conventional Wastewater Treatment

b. Check the box next to the appropriate facility status.

☒ Active ☐ Inactive

c. Check the box next to the appropriate permit type.

- ☒ TPDES Permit
- ☐ TLAP
- ☐ TPDES Permit with TLAP component
- ☐ Subsurface Area Drip Dispersal System (SADDS)

d. Check the box next to the appropriate application type

- ☐ New
- ☐ Major Amendment *with* Renewal
- ☐ Major Amendment *without* Renewal
- ☐ Renewal without changes
- ☒ Minor Amendment *with* Renewal
- ☐ Minor Amendment *without* Renewal
- ☐ Minor Modification of permit

e. For amendments or modifications, describe the proposed changes: Remove the 2 effluent holding ponds and directly discharge into the nearby Medina River, as the City's current TPDES permit allows for this direct discharge. Remove the TLAP portion of the permit.

f. For existing permits:

Permit Number: WQ00 10952001

EPA I.D. (TPDES only): TX 0129364

Expiration Date: May 8th, 2025

Section 3. Facility Owner (Applicant) and Co-Applicant Information (Instructions Page 26)

A. The owner of the facility must apply for the permit.

What is the Legal Name of the entity (applicant) applying for this permit?

City of Castroville

(The legal name must be spelled exactly as filed with the Texas Secretary of State, County, or in the legal documents forming the entity.)

If the applicant is currently a customer with the TCEQ, what is the Customer Number (CN)? You may search for your CN on the TCEQ website at http://www15.tceq.texas.gov/crpub/

CN: 600647614

What is the name and title of the person signing the application? The person must be an executive official meeting signatory requirements in *30 TAC § 305.44*.

Prefix: N/A

Last Name, First Name: Dixon, Scott

Title: City Administrator

Credential: N/A

B. Co-applicant information. Complete this section only if another person or entity is required to apply as a co-permittee.

What is the Legal Name of the co-applicant applying for this permit?

N/A

(The legal name must be spelled exactly as filed with the TX SOS, with the County, or in the legal documents forming the entity.)

If the co-applicant is currently a customer with the TCEQ, what is the Customer Number (CN)? You may search for your CN on the TCEQ website at: http://www15.tceq.texas.gov/crpub/

CN: N/A

What is the name and title of the person signing the application? The person must be an executive official meeting signatory requirements in *30 TAC § 305.44*.

Prefix: N/A Last Name, First Name: N/A

Title: N/A Credential: N/A

Provide a brief description of the need for a co-permittee: N/A

C. Core Data Form

Complete the Core Data Form for each customer and include as an attachment. If the customer type selected on the Core Data Form is **Individual**, complete **Attachment 1** of Administrative Report 1.0. See Attachment B – Core Data Form

Section 4. Application Contact Information (Instructions Page 27)

This is the person(s) TCEQ will contact if additional information is needed about this application. Provide a contact for administrative questions and technical questions.

A. Prefix: N/A Last Name, First Name: Kim, Joseph

Title: Engineer Associate I Credential: EIT

Organization Name: K Friese & Associates, LLC

Mailing Address: 9821 Katy Freeway Memorial City Place City, State, Zip Code: Houston, TX 77024

Phone No.: 512-610-7663 E-mail Address: jkim@hwlochner.com

Check one or both: ☒ Administrative Contact ☐ Technical Contact

B. Prefix: N/A Last Name, First Name: Kaboudvand-Garoussi, Nick

Title: Engineer IV Credential: PE

Organization Name: K Friese & Associates, LLC

Mailing Address: 9821 Katy Freeway Memorial City Place City, State, Zip Code: Houston, TX 77024

Phone No.: 713-875-5437 E-mail Address: nkaboudvand@kfriese.com

Check one or both: ☒ Administrative Contact ☒ Technical Contact

Section 5. Permit Contact Information (Instructions Page 27)

Provide the names and contact information for two individuals that can be contacted throughout the permit term.

A. Prefix: N/A Last Name, First Name: Carrasco, Ricardo

Title: Assistant Director of Public Works Credential: REM, A Wastewater License

Organization Name: City of Castroville

Mailing Address: 1209 Fiorella Street City, State, Zip Code: Castroville, TX 78009

Phone No.: 830-931-4090 E-mail Address: rcarrasco@castrovilletx.gov

B. Prefix: N/A Last Name, First Name: Paxson, Daniel

Title: Wastewater Superintendent Credential: B Wastewater License

Organization Name: City of Castroville

Mailing Address: 1209 Fiorella Street City, State, Zip Code: Castroville, TX 78009

Phone No.: 830-931-4090 E-mail Address: daniel.paxson@castrovilletx.gov

Section 6. Billing Contact Information (Instructions Page 27)

The permittee is responsible for paying the annual fee. The annual fee will be assessed to permits ***in effect on September 1 of each year***. The TCEQ will send a bill to the address provided in this section. The permittee is responsible for terminating the permit when it is no longer needed (using form TCEQ-20029).

Prefix: N/A Last Name, First Name: Carrasco, Ricardo

Title: Assistant Director of Public Works Credential: REM, A Wastewater License

Organization Name: City of Castroville

Mailing Address: 1209 Fiorella Street City, State, Zip Code: Castroville, TX 78009

Phone No.: 830-931-4090 E-mail Address: rcarrasco@castrovilletx.gov

Section 7. DMR/MER Contact Information (Instructions Page 27)

Provide the name and complete mailing address of the person delegated to receive and submit Discharge Monitoring Reports (DMR) (EPA 3320-1) or maintain Monthly Effluent Reports (MER).

Prefix: N/A Last Name, First Name: Paxson, Daniel

Title: Wastewater Superintendent Credential: B Wastewater License

Organization Name: City of Castroville

Mailing Address: 1209 Fiorella Street City, State, Zip Code: Castroville, TX 78009

Phone No.: 830-931-4090 E-mail Address: daniel.paxson@castrovilletx.gov

Section 8. Public Notice Information (Instructions Page 27)

A. Individual Publishing the Notices

Prefix: N/A Last Name, First Name: Carrasco, Ricardo

Title: Assistant Director of Public Works Credential: REM, A Wastewater License

Organization Name: City of Castroville

Mailing Address: 1209 Fiorella Street City, State, Zip Code: Castroville, TX 78009

Phone No.: 830-931-4090 E-mail Address: rcarrasco@castrovilletx.gov

B. Method for Receiving Notice of Receipt and Intent to Obtain a Water Quality Permit Package

Indicate by a check mark the preferred method for receiving the first notice and instructions:

☒ E-mail Address

☐ Fax

☐ Regular Mail

C. Contact permit to be listed in the Notices

Prefix: N/A Last Name, First Name: Carrasco, Ricardo

Title: Assistant Director of Public Works Credential: REM, A Wastewater License

Organization Name: City of Castroville

Mailing Address: 1209 Fiorella Street City, State, Zip Code: Castroville, TX 78009

Phone No.: 830-931-4090 E-mail Address: rcarrasco@castrovilletx.gov

D. Public Viewing Information

If the facility or outfall is located in more than one county, a public viewing place for each county must be provided.

Public building name: Castroville City Hall

Location within the building: 1st floor

Physical Address of Building: 1209 Fiorella Street

City: Castroville County: Medina

Contact (Last Name, First Name): Carrasco, Ricardo

Phone No.: 830-931-4090 Ext.: N/A

E. Bilingual Notice Requirements

This information **is required** for **new, major amendment, minor amendment or minor modification, and renewal** applications.

This section of the application is only used to determine if alternative language notices will be needed. Complete instructions on publishing the alternative language notices will be in your public notice package.

Please call the bilingual/ESL coordinator at the nearest elementary and middle schools and obtain the following information to determine whether an alternative language notices are required.

1. Is a bilingual education program required by the Texas Education Code at the elementary or middle school nearest to the facility or proposed facility?

   ☒ Yes ☐ No

   If **no**, publication of an alternative language notice is not required; **skip to** Section 9 below.

2. Are the students who attend either the elementary school or the middle school enrolled in a bilingual education program at that school?

   ☒ Yes ☐ No

3. Do the students at these schools attend a bilingual education program at another location?

   ☐ Yes ☒ No

4. Would the school be required to provide a bilingual education program but the school has waived out of this requirement under 19 TAC §89.1205(g)?

   ☐ Yes ☒ No

5. If the answer is **yes** to **question 1, 2, 3, or 4**, public notices in an alternative language are required. Which language is required by the bilingual program? Spanish

F. Plain Language Summary Template

Complete the Plain Language Summary (TCEQ Form 20972) and include as an attachment.

Attachment: See Attachment C – Plain Language Summary

G. Public Involvement Plan Form

Complete the Public Involvement Plan Form (TCEQ Form 20960) for each application for a **new permit or major amendment to a permit** and include as an attachment.

Attachment: N/A

Section 9. Regulated Entity and Permitted Site Information (Instructions Page 29)

A. If the site is currently regulated by TCEQ, provide the Regulated Entity Number (RN) issued to this site. **RN 101721645**

Search the TCEQ's Central Registry at http://www15.tceq.texas.gov/crpub/ to determine if the site is currently regulated by TCEQ.

B. Name of project or site (the name known by the community where located):

City of Castroville Wastewater Treatment Facility

C. Owner of treatment facility: City of Castroville

Ownership of Facility: ☒ Public ☐ Private ☐ Both ☐ Federal

D. Owner of land where treatment facility is or will be:

Prefix: N/A Last Name, First Name: N/A

Title: N/A Credential: N/A

Organization Name: City of Castroville

Mailing Address: 1209 Fiorella Street City, State, Zip Code: Castroville, TX 78009

Phone No.: 830-931-4090 E-mail Address: rcarrasco@castrovilletx.gov

If the landowner is not the same person as the facility owner or co-applicant, attach a lease agreement or deed recorded easement. See instructions.

Attachment: N/A

E. Owner of effluent disposal site:

Prefix: N/A; removing TLAP Last Name, First Name: N/A

Title: N/A Credential: N/A

Organization Name: N/A

Mailing Address: N/A City, State, Zip Code: N/A

Phone No.: N/A E-mail Address: N/A

If the landowner is not the same person as the facility owner or co-applicant, attach a lease agreement or deed recorded easement. See instructions.

Attachment: N/A

F. Owner sewage sludge disposal site (if authorization is requested for sludge disposal on property owned or controlled by the applicant)::

Prefix: N/A Last Name, First Name: N/A

Title: N/A Credential: N/A

Organization Name: N/A

Mailing Address: N/A City, State, Zip Code: N/A

Phone No.: N/A E-mail Address: N/A

If the landowner is not the same person as the facility owner or co-applicant, attach a lease agreement or deed recorded easement. See instructions.

Attachment: N/A

Section 10. TPDES Discharge Information (Instructions Page 31)

A. Is the wastewater treatment facility location in the existing permit accurate?

☒ Yes ☐ No

If **no**, **or a new permit application**, please give an accurate description:

N/A

B. Are the point(s) of discharge and the discharge route(s) in the existing permit correct?

☒ Yes ☐ No

If **no**, **or a new or amendment permit application**, provide an accurate description of the point of discharge and the discharge route to the nearest classified segment as defined in 30 TAC Chapter 307:

N/A

City nearest the outfall(s): City of Castroville

County in which the outfalls(s) is/are located: Medina County

C. Is or will the treated wastewater discharge to a city, county, or state highway right-of-way, or a flood control district drainage ditch?

☐ Yes ☒ No

If **yes**, indicate by a check mark if:

☐ Authorization granted ☐ Authorization pending

For **new and amendment** applications, provide copies of letters that show proof of contact and the approval letter upon receipt.

Attachment: N/A

D. For all applications involving an average daily discharge of 5 MGD or more, provide the names of all counties located within 100 statute miles downstream of the point(s) of discharge: N/A

Section 11. TLAP Disposal Information (Instructions Page 32)

A. For TLAPs, is the location of the effluent disposal site in the existing permit accurate?

☐ Yes ☐ No

If **no, or a new or amendment permit application**, provide an accurate description of the disposal site location:

N/A; removing TLAP from existing permit and not applying for TLAP.

B. City nearest the disposal site: N/A

C. County in which the disposal site is located: N/A

D. For **TLAPs**, describe the routing of effluent from the treatment facility to the disposal site:

N/A

E. For **TLAPs**, please identify the nearest watercourse to the disposal site to which rainfall runoff might flow if not contained: N/A

Section 12. Miscellaneous Information (Instructions Page 32)

A. Is the facility located on or does the treated effluent cross American Indian Land?

☐ Yes ☒ No

B. If the existing permit contains an onsite sludge disposal authorization, is the location of the sewage sludge disposal site in the existing permit accurate?

☐ Yes ☐ No ☒ Not Applicable

If No, or if a new onsite sludge disposal authorization is being requested in this permit application, provide an accurate location description of the sewage sludge disposal site.

N/A

C. Did any person formerly employed by the TCEQ represent your company and get paid for service regarding this application?

☐ Yes ☒ No

If yes, list each person formerly employed by the TCEQ who represented your company and was paid for service regarding the application: N/A

D. Do you owe any fees to the TCEQ?

☐ Yes ☒ No

If **yes**, provide the following information:

Account number: N/A

Amount past due: N/A

E. Do you owe any penalties to the TCEQ?

☐ Yes ☒ No

If **yes**, please provide the following information:

Enforcement order number: N/A

Amount past due: N/A

Section 13. Attachments (Instructions Page 33)

Indicate which attachments are included with the Administrative Report. Check all that apply:

☐ Lease agreement or deed recorded easement, if the land where the treatment facility is located or the effluent disposal site are not owned by the applicant or co-applicant.

☒ Original full-size USGS Topographic Map with the following information:

- Applicant's property boundary
- Treatment facility boundary
- Labeled point of discharge for each discharge point (TPDES only)
- Highlighted discharge route for each discharge point (TPDES only)
- Onsite sewage sludge disposal site (if applicable)
- Effluent disposal site boundaries (TLAP only)
- New and future construction (if applicable)
- 1 mile radius information
- 3 miles downstream information (TPDES only)
- All ponds.

☐ Attachment 1 for Individuals as co-applicants

☒ Other Attachments. Please specify: Attachment A – SPIF; Attachment B - Core Data Form; Attachment C - Plain Language Summary; ePay vouchers; Construction Plan Set for Capacity Expansion (only uploaded to FTPS just for reference, even though it's not required).

Section 14. Signature Page (Instructions Page 34)

If co-applicants are necessary, each entity must submit an original, separate signature page.

Permit Number: WQ0010952001

Applicant: City of Castroville

Certification:

I certify under penalty of law that this document and all attachments were prepared under my direction or supervision in accordance with a system designed to assure that qualified personnel properly gather and evaluate the information submitted. Based on my inquiry of the person or persons who manage the system, or those persons directly responsible for gathering the information, the information submitted is, to the best of my knowledge and belief, true, accurate, and complete. I am aware there are significant penalties for submitting false information, including the possibility of fine and imprisonment for knowing violations.

I further certify that I am authorized under 30 Texas Administrative Code § 305.44 to sign and submit this document, and can provide documentation in proof of such authorization upon request.

Signatory name (typed or printed): Scott Dixon

Signatory title: City Administrator

Signature: _____ Date: Nov. 04, 2024
(Use blue ink)

Subscribed and Sworn to before me by the said Randall Scott Dixon

on this 5th day of November, 2024.

My commission expires on the 29 day of June, 2026.

Katherine Adams
Notary Public

[SEAL]

KATHEREINE ADAMS
Notary Public, State of Texas
Comm. Expires 06-29-2026
Notary ID 131627024

Medina County
County, Texas

DOMESTIC WASTEWATER PERMIT APPLICATION

SUPPLEMENTAL PERMIT INFORMATION FORM (SPIF)

This form applies to TPDES permit applications only. Complete and attach the Supplemental Permit information Form (SPIF) (TCEQ Form 20971).

Attachment: See Attachment A – Supplemental Permit Information Form (SPIF)

ATTACHMENT 1

INDIVIDUAL INFORMATION

Section 1. Individual Information (Instructions Page 41)

Complete this attachment if the facility applicant or co-applicant is an individual. Make additional copies of this attachment if both are individuals.

Prefix (Mr., Ms., Miss): N/A

Full legal name (Last Name, First Name, Middle Initial): N/A

Driver's License or State Identification Number: N/A

Date of Birth: N/A

Mailing Address: N/A

City, State, and Zip Code: N/A

Phone Number: N/A Fax Number: N/A

E-mail Address: N/A

CN: N/A

For Commission Use Only:
Customer Number:
Regulated Entity Number:
Permit Number:

DOMESTIC WASTEWATER PERMIT APPLICATION CHECKLIST OF COMMON DEFICIENCIES

Below is a list of common deficiencies found during the administrative review of domestic wastewater permit applications. To ensure the timely processing of this application, please review the items below and indicate by checking Yes that each item is complete and in accordance applicable rules at 30 TAC Chapters 21, 281, and 305. If an item is not required this application, indicate by checking N/A where appropriate. Please do not submit the application until the items below have been addressed.

Core Data Form (TCEQ Form No. 10400) ☒ Yes
(Required for all application types. Must be completed in its entirety and signed. Note: Form may be signed by applicant representative.)

Correct and Current Industrial Wastewater Permit Application Forms ☒ Yes
(TCEQ Form Nos. 10053 and 10054. Version dated 6/25/2018 or later.)

Water Quality Permit Payment Submittal Form (Page 19) ☐ Yes
(Original payment sent to TCEQ Revenue Section. See instructions for mailing address.)

7.5 Minute USGS Quadrangle Topographic Map Attached ☒ Yes
(Full-size map if seeking "New" permit. 8 ½ x 11 acceptable for Renewals and Amendments)

Current/Non-Expired, Executed Lease Agreement or Easement ☒ N/A ☐ Yes

Landowners Map ☒ N/A ☐ Yes
(See instructions for landowner requirements)

Things to Know:

- All the items shown on the map must be labeled.
- The applicant's complete property boundaries must be delineated which includes boundaries of contiguous property owned by the applicant.
- The applicant cannot be its own adjacent landowner. You must identify the landowners immediately adjacent to their property, regardless of how far they are from the actual facility.
- If the applicant's property is adjacent to a road, creek, or stream, the landowners on the opposite side must be identified. Although the properties are not adjacent to applicant's property boundary, they are considered potentially affected landowners. If the adjacent road is a divided highway as identified on the USGS topographic map, the applicant does not have to identify the landowners on the opposite side of the highway.

Landowners Cross Reference List ☒ N/A ☐ Yes
(See instructions for landowner requirements)

Landowners Labels or USB Drive attached ☒ N/A ☐ Yes
(See instructions for landowner requirements)

Original signature per 30 TAC § 305.44 – Blue Ink Preferred ☒ Yes
(If signature page is not signed by an elected official or principle executive officer, a copy of signature authority/delegation letter must be attached)

Plain Language Summary ☒ Yes

Your transaction is complete. Thank you for using TCEQ ePay.

Note: It may take up to 3 working days for this electronic payment to be processed and be reflected in the TCEQ ePay system. Print this receipt and the vouchers for your records. An email receipt has also been sent.

Transaction Information

Trace Number: 582EA000632904
Date: 11/05/2024 01:49 PM
Payment Method: CC - Authorization 000009307G
ePay Actor: JOSEPH KIM
Actor Email: jkim@kfriese.com
IP: 68.203.6.110
TCEQ Amount: $1,765.00
Texas.gov Price: $1,804.97*

* This service is provided by Texas.gov, the official website of Texas. The price of this service includes funds that support the ongoing operations and enhancements of Texas.gov, which is provided by a third party in partnership with the State.

Payment Contact Information

Name: JOSEPH KIM
Company: K FRIESE & ASSOCIATES
Address: 1120 S CAPITAL OF TEXAS HWY, AUSTIN, TX 78746
Phone: 512-338-1704

Cart Items

Click on the voucher number to see the voucher details.

Voucher	Fee Description	AR Number	Amount
729432	WW PERMIT - FACILITY WITH FLOW >= .50 & < 1.0 MGD - RENEWAL		$1,600.00
729433	30 TAC 305.53B WQ RENEWAL NOTIFICATION FEE		$15.00
729434	WW PERMIT - FACILITY WITH ANY FLOW - MINOR AMENDMENT		$100.00
729435	30 TAC 305.53B WQ NOTIFICATION FEE		$50.00
		TCEQ Amount:	$1,765.00

ePay Again | Exit ePay

Note: It may take up to 3 working days for this electronic payment to be processed and be reflected in the TCEQ ePay system. Print this receipt for your records.

© 2002-2024 Texas Commission on Environmental Quality

Print this voucher for your records. If you are sending the TCEQ hardcopy documents related to this payment, include a copy of this voucher.

Transaction Information

Voucher Number: 729432
Trace Number: 582EA000632904
Date: 11/05/2024 01:49 PM
Payment Method: CC - Authorization 000009307G
Voucher Amount: $1,600.00
Fee Type: WW PERMIT - FACILITY WITH FLOW >= .50 & < 1.0 MGD - RENEWAL
ePay Actor: JOSEPH KIM
Actor Email: jkim@kfriese.com
IP: 68.203.6.110

Payment Contact Information

Name: JOSEPH KIM
Company: K FRIESE & ASSOCIATES
Address: 1120 S CAPITAL OF TEXAS HWY, AUSTIN, TX 78746
Phone: 512-338-1704

Site Information

RN: RN101721645
Site Name: CITY OF CASTROVILLE WASTEWATER TREATMENT FACILITY
Site Address: 818 ALSACE AVENUE, CASTROVILLE, TX 78009
Site Location: 818 ALSACE AVE CASTROVILLE TX 78009

Customer Information

CN: CN600647614
Customer Name: CITY OF CASTROVILLE
Customer Address: 1209 FIORELLA STREET, CASTROVILLE, TX 78009

Other Information

Program Area ID: TX0129364
Comments: EPA ID for TPDES

Close

© 2002-2024 Texas Commission on Environmental Quality

Print this voucher for your records. If you are sending the TCEQ hardcopy documents related to this payment, include a copy of this voucher.

Transaction Information

Voucher Number:	729433
Trace Number:	582EA000632904
Date:	11/05/2024 01:49 PM
Payment Method:	CC - Authorization 000009307G
Voucher Amount:	$15.00
Fee Type:	30 TAC 305.53B WQ RENEWAL NOTIFICATION FEE
ePay Actor:	JOSEPH KIM
Actor Email:	jkim@kfriese.com
IP:	68.203.6.110

Payment Contact Information

Name:	JOSEPH KIM
Company:	K FRIESE & ASSOCIATES
Address:	1120 S CAPITAL OF TEXAS HWY, AUSTIN, TX 78746
Phone:	512-338-1704

Close

© 2002-2024 Texas Commission on Environmental Quality

Print this voucher for your records. If you are sending the TCEQ hardcopy documents related to this payment, include a copy of this voucher.

Transaction Information

Voucher Number:	729434
Trace Number:	582EA000632904
Date:	11/05/2024 01:49 PM
Payment Method:	CC - Authorization 000009307G
Voucher Amount:	$100.00
Fee Type:	WW PERMIT - FACILITY WITH ANY FLOW - MINOR AMENDMENT
ePay Actor:	JOSEPH KIM
Actor Email:	jkim@kfriese.com
IP:	68.203.6.110

Payment Contact Information

Name:	JOSEPH KIM
Company:	K FRIESE & ASSOCIATES
Address:	1120 S CAPITAL OF TEXAS HWY, AUSTIN, TX 78746
Phone:	512-338-1704

Site Information

RN:	RN101721645
Site Name:	CITY OF CASTROVILLE WASTEWATER TREATMENT FACILITY
Site Address:	818 ALSACE AVENUE, CASTROVILLE, TX 78009
Site Location:	818 ALSACE AVE CASTROVILLE TX 78009

Customer Information

CN:	CN600647614
Customer Name:	CITY OF CASTROVILLE
Customer Address:	1209 FIORELLA STREET, CASTROVILLE, TX 78009

Other Information

Program Area ID:	TX0129364
Comments:	EPA ID for TPDES

Close

© 2002-2024 Texas Commission on Environmental Quality

Print this voucher for your records. If you are sending the TCEQ hardcopy documents related to this payment, include a copy of this voucher.

Transaction Information

Voucher Number:	729435
Trace Number:	582EA000632904
Date:	11/05/2024 01:49 PM
Payment Method:	CC - Authorization 000009307G
Voucher Amount:	$50.00
Fee Type:	30 TAC 305.53B WQ NOTIFICATION FEE
ePay Actor:	JOSEPH KIM
Actor Email:	jkim@kfriese.com
IP:	68.203.6.110

Payment Contact Information

Name:	JOSEPH KIM
Company:	K FRIESE & ASSOCIATES
Address:	1120 S CAPITAL OF TEXAS HWY, AUSTIN, TX 78746
Phone:	512-338-1704

Close

© 2002-2024 Texas Commission on Environmental Quality

TEXAS COMMISSION ON ENVIRONMENTAL QUALITY

DOMESTIC WASTEWATER PERMIT APPLICATION TECHNICAL REPORT 1.0

For any questions about this form, please contact the Domestic Wastewater Permitting Team at 512-239-4671.

The following information is required for all renewal, new, and amendment applications.

Section 1. Permitted or Proposed Flows (Instructions Page 43)

A. Existing/Interim I Phase

Design Flow (MGD): 0.7

2-Hr Peak Flow (MGD): 1.7

Estimated construction start date: N/A

Estimated waste disposal start date: N/A

B. Interim II Phase

Design Flow (MGD): N/A

2-Hr Peak Flow (MGD): N/A

Estimated construction start date: N/A

Estimated waste disposal start date: N/A

C. Final Phase

Design Flow (MGD): 0.7

2-Hr Peak Flow (MGD): 1.7

Estimated construction start date: N/A (construction completed)

Estimated waste disposal start date: N/A

D. Current Operating Phase

Provide the startup date of the facility: N/A

Section 2. Treatment Process (Instructions Page 43)

A. Current Operating Phase

Provide a detailed description of the treatment process. **Include the type of treatment plant, mode of operation, and all treatment units.** Start with the plant's head works and

finish with the point of discharge. Include all sludge processing and drying units. **If more than one phase exists or is proposed, a description of *each phase* must be provided**.

Wastewater enters the treatment plant through a drum screen where primary solids are removed through a screw conveyor. The flow stream proceeds to an activated sludge carousel operating in complete mix mode. Flow continues to a clarifier where suspended secondary solids are removed from the flow stream. Clarifier sludge is stored in the sludge holding basin before it is dewatered in the sludge screw press. The dewatered sludge is trucked off to a landfill. Clarified effluent continues to a disc cloth filter where suspended solids are strained from the effluent as a polishing step of the treatment, and then to a chlorine contact chamber where the effluent is disinfected before it is discharged into a drainage swale which goes to Medina River.

B. Treatment Units

In Table 1.0(1), provide the treatment unit type, the number of units, and dimensions (length, width, depth) **of each treatment unit, accounting for *all* phases of operation.**

Table 1.0(1) - Treatment Units

Treatment Unit Type	Number of Units	Dimensions (L x W x D)
Mechanical drum screen	1	3’ wide x 4’ deep
Bar Screen	1	3’ Wide x 4’ deep
BNR Carousel Oxidation ditch	2	100’ x 40’ x 10’
Clarifier	1	50’ Diameter
Disc cloth filter	1	12’ x 8’ x 6’
Chlorine Contact Chamber	1	30’ Diameter
Sludge basin	1	100’ x 38’ x 10’
Sludge screw press	1	10’ x 4’ x 6’

C. Process Flow Diagram

Provide flow diagrams for the existing facilities and **each** proposed phase of construction.

Attachment: See Attachment F – Process Flow Diagram

Section 3. Site Information and Drawing (Instructions Page 44)

Provide the TPDES discharge outfall latitude and longitude. Enter N/A if not applicable.

- Latitude: 29.674975N
- Longitude: 38.884533W

Provide the TLAP disposal site latitude and longitude. Enter N/A if not applicable.

- Latitude: N/A
- Longitude: N/A

Provide a site drawing for the facility that shows the following:

- The boundaries of the treatment facility;
- The boundaries of the area served by the treatment facility;
- If land disposal of effluent, the boundaries of the disposal site and all storage/holding

ponds; and

- If sludge disposal is authorized in the permit, the boundaries of the land application or disposal site.

Attachment: See Attachment G – Site Drawing

Provide the name **and** a description of the area served by the treatment facility.

The treatment plant serves the entire City of Castroville, a city of just over 3,000 people. The City's commercial and industrial activity is limited primarily to retail.

Collection System Information **for wastewater TPDES permits only**: Provide information for each **uniquely owned** collection system, existing and new, served by this facility, including satellite collection systems. **Please see the instructions for a detailed explanation and examples.**

Collection System Information

Collection System Name	Owner Name	Owner Type	Population Served
City of Castroville	City of Castroville	Publicly Owned	3,000

Section 4. Unbuilt Phases (Instructions Page 45)

Is the application for a renewal of a permit that contains an unbuilt phase or phases?

☐ Yes ☒ No

If yes, does the existing permit contain a phase that has not been constructed **within five years** of being authorized by the TCEQ?

☐ Yes ☐ No

If yes, provide a detailed discussion regarding the continued need for the unbuilt phase. **Failure to provide sufficient justification may result in the Executive Director recommending denial of the unbuilt phase or phases**.

N/A

Section 5. Closure Plans (Instructions Page 45)

Have any treatment units been taken out of service permanently, or will any units be taken out of service in the next five years?

☒ Yes ☐ No

If yes, was a closure plan submitted to the TCEQ?

☒ Yes ☐ No

If yes, provide a brief description of the closure and the date of plan approval.

The existing storage ponds are being discontinued as the plant's effluent will discharge into the Medina River. This closure plan has been submitted September 2024.

Section 6. Permit Specific Requirements (Instructions Page 45)

For applicants with an existing permit, check the Other Requirements or Special Provisions of the permit.

A. Summary transmittal

Have plans and specifications been approved for the existing facilities and each proposed phase?

☒ Yes ☐ No

If yes, provide the date(s) of approval for each phase: 0.9 MGD WWTP Capacity Expansion 1st bid package: June 8th, 2016; 2nd and 3rd bid packages: September 15th, 2016. These construction plans are uploaded to the FTPS for reference, but not in the physical copies.

Provide information, including dates, on any actions taken to meet a *requirement or provision* pertaining to the submission of a summary transmittal letter. **Provide a copy of an approval letter from the TCEQ, if applicable**.

N/A; this is a permit renewal application.

B. Buffer zones

Have the buffer zone requirements been met?

☒ Yes ☐ No

Provide information below, including dates, on any actions taken to meet the conditions of the buffer zone. If available, provide any new documentation relevant to maintaining the buffer zones.

N/A; this is a permit renewal application.

C. Other actions required by the current permit

Does the *Other Requirements* or *Special Provisions* section in the existing permit require submission of any other information or other required actions? Examples include Notification of Completion, progress reports, soil monitoring data, etc.

☐ Yes ☒ No

If yes, provide information below on the status of any actions taken to meet the conditions of an *Other Requirement* or *Special Provision*.

The soil monitoring data outlined in the existing permit is not needed, as the TLAP is not being submitted with this application and the land application area is no longer applicable. However, a copy of the soil monitoring data is uploaded to the FTPS just in case for reference.

D. Grit and grease treatment

1. Acceptance of grit and grease waste

Does the facility have a grit and/or grease processing facility onsite that treats and decants or accepts transported loads of grit and grease waste that are discharged directly to the wastewater treatment plant prior to any treatment?

☐ Yes ☒ No

If No, stop here and continue with Subsection E. Stormwater Management.

2. Grit and grease processing

Describe below how the grit and grease waste is treated at the facility. In your description, include how and where the grit and grease is introduced to the treatment works and how it is separated or processed. Provide a flow diagram showing how grit and grease is processed at the facility.

N/A; the plant does not treat grit and grease separately.

3. Grit disposal

Does the facility have a Municipal Solid Waste (MSW) registration or permit for grit disposal?

☐ Yes ☐ No

If No, contact the TCEQ Municipal Solid Waste team at 512-239-2335. Note: A registration or permit is required for grit disposal. Grit shall not be combined with treatment plant sludge. See the instruction booklet for additional information on grit disposal requirements and restrictions.

Describe the method of grit disposal.

N/A; the plant does not treat grit separately.

4. Grease and decanted liquid disposal

Note: A registration or permit is required for grease disposal. Grease shall not be combined with treatment plant sludge. For more information, contact the TCEQ Municipal Solid Waste team at 512-239-2335.

Describe how the decant and grease are treated and disposed of after grit separation.

N/A

E. Stormwater management

1. Applicability

Does the facility have a design flow of 1.0 MGD or greater in any phase?

☐ Yes ☒ No

Does the facility have an approved pretreatment program, under 40 CFR Part 403?

☐ Yes ☒ No

If no to both of the above, then skip to Subsection F, Other Wastes Received.

2. MSGP coverage

Is the stormwater runoff from the WWTP and dedicated lands for sewage disposal currently permitted under the TPDES Multi-Sector General Permit (MSGP), TXR050000?

☐ Yes ☐ No

If yes, please provide MSGP Authorization Number and skip to Subsection F, Other Wastes Received:

TXR05 N/A or TXRNE N/A

If no, do you intend to seek coverage under TXR050000?

☐ Yes ☐ No

3. Conditional exclusion

Alternatively, do you intend to apply for a conditional exclusion from permitting based TXR050000 (Multi Sector General Permit) Part II B.2 or TXR050000 (Multi Sector General Permit) Part V, Sector T 3(b)?

☐ Yes ☐ No

If yes, please explain below then proceed to Subsection F, Other Wastes Received:

N/A

4. ***Existing coverage in individual permit***

Is your stormwater discharge currently permitted through this individual TPDES or TLAP permit?

☐ Yes ☐ No

If yes, provide a description of stormwater runoff management practices at the site that are authorized in the wastewater permit then skip to Subsection F, Other Wastes Received.

N/A

5. ***Zero stormwater discharge***

Do you intend to have no discharge of stormwater via use of evaporation or other means?

☐ Yes ☐ No

If yes, explain below then skip to Subsection F. Other Wastes Received.

N/A

Note: If there is a potential to discharge any stormwater to surface water in the state as the result of any storm event, then permit coverage is required under the MSGP or an individual discharge permit. This requirement applies to all areas of facilities with treatment plants or systems that treat, store, recycle, or reclaim domestic sewage, wastewater or sewage sludge (including dedicated lands for sewage sludge disposal located within the onsite property boundaries) that meet the applicability criteria of above. You have the option of obtaining coverage under the MSGP for direct discharges, (recommended), or obtaining coverage under this individual permit.

6. ***Request for coverage in individual permit***

Are you requesting coverage of stormwater discharges associated with your treatment plant under this individual permit?

☐ Yes ☐ No

If yes, provide a description of stormwater runoff management practices at the site for which you are requesting authorization in this individual wastewater permit and describe whether you intend to comingle this discharge with your treated effluent or discharge it via a separate dedicated stormwater outfall. Please also indicate if you

intend to divert stormwater to the treatment plant headworks and indirectly discharge it to water in the state.

N/A

Note: Direct stormwater discharges to waters in the state authorized through this individual permit will require the development and implementation of a stormwater pollution prevention plan (SWPPP) and will be subject to additional monitoring and reporting requirements. Indirect discharges of stormwater via headworks recycling will require compliance with all individual permit requirements including 2-hour peak flow limitations. All stormwater discharge authorization requests will require additional information during the technical review of your application.

F. Discharges to the Lake Houston Watershed

Does the facility discharge in the Lake Houston watershed?

☐ Yes ☒ No

If yes, attach a Sewage Sludge Solids Management Plan. See Example 5 in the instructions.
N/A

G. Other wastes received including sludge from other WWTPs and septic waste

1. Acceptance of sludge from other WWTPs

Does or will the facility accept sludge from other treatment plants at the facility site?

☐ Yes ☒ No

If yes, attach sewage sludge solids management plan. See Example 5 of instructions.

In addition, provide the date the plant started or is anticipated to start accepting sludge, an estimate of monthly sludge acceptance (gallons or millions of gallons), an estimate of the BOD_5 concentration of the sludge, and the design BOD_5 concentration of the influent from the collection system. Also note if this information has or has not changed since the last permit action.

N/A

Note: Permits that accept sludge from other wastewater treatment plants may be required to have influent flow and organic loading monitoring.

2. Acceptance of septic waste

Is the facility accepting or will it accept septic waste?

☐ Yes ☒ No

If yes, does the facility have a Type V processing unit?

☐ Yes ☐ No

If yes, does the unit have a Municipal Solid Waste permit?

☐ Yes ☐ No

If yes to any of the above, provide the date the plant started or is anticipated to start accepting septic waste, an estimate of monthly septic waste acceptance (gallons or millions of gallons), an estimate of the BOD_5 concentration of the septic waste, and the design BOD_5 concentration of the influent from the collection system. Also note if this information has or has not changed since the last permit action.

N/A

Note: Permits that accept sludge from other wastewater treatment plants may be required to have influent flow and organic loading monitoring.

3. ***Acceptance of other wastes (not including septic, grease, grit, or RCRA, CERCLA or as discharged by IUs listed in Worksheet 6)***

Is or will the facility accept wastes that are not domestic in nature excluding the categories listed above?

☐ Yes ☒ No

If yes, provide the date that the plant started accepting the waste, an estimate how much waste is accepted on a monthly basis (gallons or millions of gallons), a description of the entities generating the waste, and any distinguishing chemical or other physical characteristic of the waste. Also note if this information has or has not changed since the last permit action.

N/A

Section 7. Pollutant Analysis of Treated Effluent (Instructions Page 50)

Is the facility in operation?

☒ Yes ☐ No

If no, this section is not applicable. Proceed to Section 8.

If yes, provide effluent analysis data for the listed pollutants. ***Wastewater treatment facilities*** complete Table 1.0(2). ***Water treatment facilities*** discharging filter backwash water, complete Table 1.0(3). Provide copies of the laboratory results sheets. **These tables are not applicable for a minor amendment without renewal.** See the instructions for guidance.

Note: The sample date must be within 1 year of application submission.

Table1.0(2) – Pollutant Analysis for Wastewater Treatment Facilities

Pollutant	Average Conc.	Max Conc.	No. of Samples	Sample Type	Sample Date/Time
$CBOD_5$, mg/l	4.33	5	3	Composite /Grab	10/21/24 @9:50, 10:10am 10/21/24 @1pm
Total Suspended Solids, mg/l	3	7	3	Composite /Grab	10/21/24 @9:50, 10:10am 10/21/24 @1pm
Ammonia Nitrogen, mg/l	0.1	0.1	1	Composite	10/21/24 @1pm
Nitrate Nitrogen, mg/l	5.7	5.7	1	Grab	10/23/24 @7:30am
Total Kjeldahl Nitrogen, mg/l	2	2	1	Grab	10/23/24 @7:30am
Sulfate, mg/l	43	43	1	Grab	10/23/24 @7:30am
Chloride, mg/l	150	150	1	Grab	10/23/24 @7:30am
Total Phosphorus, mg/l	1.54	1.54	1	Composite	10/21/24 @1pm
pH, standard units	7.49	Max:7.53 Min:7.49	4	Grab	Oct. 2024
Dissolved Oxygen*, mg/l	6.92	7.73	4	Grab	Oct. 2024
Chlorine Residual, mg/l	2.53	3.97	23	Grab	Oct. 2024
E.coli (CFU/100ml) freshwater	13.67	41	3	Composite /Grab	10/21/24 @9:50,10:10am 10/23/24 @7:30am
Entercocci (CFU/100ml) saltwater	N/A	N/A	N/A	N/A	N/A
Total Dissolved Solids, mg/l	600	600	1	Grab	10/23/24 @7:30am
Electrical Conductivity, µmohs/cm, †	N/A	N/A	N/A	N/A	N/A
Oil & Grease, mg/l	N/A	N/A	N/A	N/A	N/A
Alkalinity ($CaCO_3$)*, mg/l	N/A	N/A	N/A	N/A	N/A

*TPDES permits only
†TLAP permits only

Table1.0(3) – Pollutant Analysis for Water Treatment Facilities

Pollutant	Average Conc.	Max Conc.	No. of Samples	Sample Type	Sample Date/Time
Total Suspended Solids, mg/l					
Total Dissolved Solids, mg/l					
pH, standard units					
Fluoride, mg/l					
Aluminum, mg/l					
Alkalinity ($CaCO_3$), mg/l					

Section 8. Facility Operator (Instructions Page 50)

Facility Operator Name: Daniel Paxson

Facility Operator's License Classification and Level: B Wastewater License

Facility Operator's License Number: WW0076685

Section 9. Sludge and Biosolids Management and Disposal (Instructions Page 51)

A. WWTP's Biosolids Management Facility Type

Check all that apply. See instructions for guidance

- ☐ Design flow>= 1 MGD
- ☐ Serves >= 10,000 people
- ☐ Class I Sludge Management Facility (per 40 CFR § 503.9)
- ☒ Biosolids generator
- ☐ Biosolids end user – land application (onsite)
- ☐ Biosolids end user – surface disposal (onsite)
- ☐ Biosolids end user – incinerator (onsite)

B. WWTP's Biosolids Treatment Process

Check all that apply. See instructions for guidance.

- ☐ Aerobic Digestion
- ☐ Air Drying (or sludge drying beds)
- ☐ Lower Temperature Composting
- ☐ Lime Stabilization
- ☐ Higher Temperature Composting
- ☐ Heat Drying
- ☐ Thermophilic Aerobic Digestion
- ☐ Beta Ray Irradiation

☐ Gamma Ray Irradiation

☐ Pasteurization

☐ Preliminary Operation (e.g. grinding, de-gritting, blending)

☒ Thickening (e.g. gravity thickening, centrifugation, filter press, vacuum filter)

☐ Sludge Lagoon

☐ Temporary Storage (< 2 years)

☐ Long Term Storage (>= 2 years)

☐ Methane or Biogas Recovery

☐ Other Treatment Process: N/A

C. Biosolids Management

Provide information on the *intended* biosolids management practice. Do not enter every management practice that you want authorized in the permit, as the permit will authorize all biosolids management practices listed in the instructions. Rather indicate the management practice the facility plans to use.

Biosolids Management

Management Practice	Handler or Preparer Type	Bulk or Bag Container	Amount (dry metric tons)	Pathogen Reduction Options	Vector Attraction Reduction Option
Disposal in Landfill	Off-site Third-Party Handler or Preparer	Not Applicable	263.16	Class A: PFRP Equivalent (explain below)	Option 7: Stabilized sludge is >=75% solids

If “Other” is selected for Management Practice, please explain (e.g. monofill or transport to another WWTP): For the Pathogen Reduction Options: if the incoming sludge is wet, dirt is added for solidification and is mixed to become a solid.

D. Disposal site

Disposal site name: WM Covel Gardens Landfill

TCEQ permit or registration number: 82093

County where disposal site is located: Bexar County

E. Transportation method

Method of transportation (truck, train, pipe, other): Truck

Name of the hauler: Waste Management

Hauler registration number: 74301

Sludge is transported as a:

Liquid ☐ semi-liquid ☐ semi-solid ☐ solid ☒

Section 10. Permit Authorization for Sewage Sludge Disposal (Instructions Page 53)

A. Beneficial use authorization

Does the existing permit include authorization for land application of sewage sludge for beneficial use?

☐ Yes ☒ No

If yes, are you requesting to continue this authorization to land apply sewage sludge for beneficial use?

☐ Yes ☐ No

If yes, is the completed **Application for Permit for Beneficial Land Use of Sewage Sludge (TCEQ Form No. 10451)** attached to this permit application (see the instructions for details)?

☐ Yes ☐ No

B. Sludge processing authorization

Does the existing permit include authorization for any of the following sludge processing, storage or disposal options?

Sludge Composting	☐ Yes	☒ No
Marketing and Distribution of sludge	☐ Yes	☒ No
Sludge Surface Disposal or Sludge Monofill	☐ Yes	☒ No
Temporary storage in sludge lagoons	☐ Yes	☒ No

If yes to any of the above sludge options and the applicant is requesting to continue this authorization, is the completed **Domestic Wastewater Permit Application: Sewage Sludge Technical Report (TCEQ Form No. 10056)** attached to this permit application?

☐ Yes ☐ No

Section 11. Sewage Sludge Lagoons (Instructions Page 53)

Does this facility include sewage sludge lagoons?

☐ Yes ☒ No

If yes, complete the remainder of this section. If no, proceed to Section 12.

A. Location information

The following maps are required to be submitted as part of the application. For each map, provide the Attachment Number.

- Original General Highway (County) Map:

  Attachment: N/A
- USDA Natural Resources Conservation Service Soil Map:

  Attachment: N/A
- Federal Emergency Management Map:

Attachment: N/A

- Site map:

  Attachment: N/A

Discuss in a description if any of the following exist within the lagoon area. Check all that apply.

- ☐ Overlap a designated 100-year frequency flood plain
- ☐ Soils with flooding classification
- ☐ Overlap an unstable area
- ☐ Wetlands
- ☐ Located less than 60 meters from a fault
- ☒ None of the above

Attachment: N/A

If a portion of the lagoon(s) is located within the 100-year frequency flood plain, provide the protective measures to be utilized including type and size of protective structures:

N/A

B. Temporary storage information

Provide the results for the pollutant screening of sludge lagoons. These results are in addition to pollutant results in *Section 7 of Technical Report 1.0.*

Nitrate Nitrogen, mg/kg: N/A

Total Kjeldahl Nitrogen, mg/kg: N/A

Total Nitrogen (=nitrate nitrogen + TKN), mg/kg: N/A

Phosphorus, mg/kg: N/A

Potassium, mg/kg: N/A

pH, standard units: N/A

Ammonia Nitrogen mg/kg: N/A

Arsenic: N/A

Cadmium: N/A

Chromium: N/A

Copper: N/A

Lead: N/A

Mercury: N/A

Molybdenum: N/A

Nickel: N/A

Selenium: N/A

Zinc: N/A

Total PCBs: N/A

Provide the following information:

Volume and frequency of sludge to the lagoon(s): N/A

Total dry tons stored in the lagoons(s) per 365-day period: N/A

Total dry tons stored in the lagoons(s) over the life of the unit: N/A

C. Liner information

Does the active/proposed sludge lagoon(s) have a liner with a maximum hydraulic conductivity of $1x10^{-7}$ cm/sec?

☐ Yes ☐ No

If yes, describe the liner below. Please note that a liner is required.

N/A

D. Site development plan

Provide a detailed description of the methods used to deposit sludge in the lagoon(s):

N/A

Attach the following documents to the application.

- Plan view and cross-section of the sludge lagoon(s)

  Attachment: N/A
- Copy of the closure plan

  Attachment: N/A
- Copy of deed recordation for the site

  Attachment: N/A
- Size of the sludge lagoon(s) in surface acres and capacity in cubic feet and gallons

  Attachment: N/A
- Description of the method of controlling infiltration of groundwater and surface water from entering the site

  Attachment: N/A
- Procedures to prevent the occurrence of nuisance conditions

  Attachment: N/A

E. Groundwater monitoring

Is groundwater monitoring currently conducted at this site, or are any wells available for groundwater monitoring, or are groundwater monitoring data otherwise available for the sludge lagoon(s)?

☐ Yes ☐ No

If groundwater monitoring data are available, provide a copy. Provide a profile of soil types encountered down to the groundwater table and the depth to the shallowest groundwater as a separate attachment.

Attachment: N/A

Section 12. Authorizations/Compliance/Enforcement (Instructions Page 55)

A. Additional authorizations

Does the permittee have additional authorizations for this facility, such as reuse authorization, sludge permit, etc?

☒ Yes ☐ No

If yes, provide the TCEQ authorization number and description of the authorization:

R1095-2001. Reuse of treated effluent for irrigation of municipal parkland and agricultural land.

B. Permittee enforcement status

Is the permittee currently under enforcement for this facility?

☒ Yes ☐ No

Is the permittee required to meet an implementation schedule for compliance or enforcement?

☒ Yes ☐ No

If yes to either question, provide a brief summary of the enforcement, the implementation schedule, and the current status:

TCEQ ordered the vegetation on irrigation storage ponds embankments to be removed. The city has opted to decommission the storage ponds in lieu of removing the vegetation and stabilizing the embankments.

Section 13. RCRA/CERCLA Wastes (Instructions Page 55)

A. RCRA hazardous wastes

Has the facility received in the past three years, does it currently receive, or will it receive RCRA hazardous waste?

☐ Yes ☒ No

B. Remediation activity wastewater

Has the facility received in the past three years, does it currently receive, or will it receive CERCLA wastewater, RCRA remediation/corrective action wastewater or other remediation activity wastewater?

☐ Yes ☒ No

C. Details about wastes received

If yes to either Subsection A or B above, provide detailed information concerning these wastes with the application.

Attachment: N/A

Section 14. Laboratory Accreditation (Instructions Page 56)

All laboratory tests performed must meet the requirements of *30 TAC Chapter 25, Environmental Testing Laboratory Accreditation and Certification*, which includes the following general exemptions from National Environmental Laboratory Accreditation Program (NELAP) certification requirements:

- The laboratory is an in-house laboratory and is:
  - periodically inspected by the TCEQ; or
  - located in another state and is accredited or inspected by that state; or
  - performing work for another company with a unit located in the same site; or
  - performing pro bono work for a governmental agency or charitable organization.
- The laboratory is accredited under federal law.
- The data are needed for emergency-response activities, and a laboratory accredited under the Texas Laboratory Accreditation Program is not available.
- The laboratory supplies data for which the TCEQ does not offer accreditation.

The applicant should review 30 TAC Chapter 25 for specific requirements.

The following certification statement shall be signed and submitted with every application. See the Signature Page section in the Instructions, for a list of designated representatives who may sign the certification.

CERTIFICATION:

I certify that all laboratory tests submitted with this application meet the requirements of *30 TAC Chapter 25, Environmental Testing Laboratory Accreditation and Certification.*

Printed Name:

Title:

Signature: _____

Date: Nov. 04, 2024

DOMESTIC WASTEWATER PERMIT APPLICATION WORKSHEET 2.0: RECEIVING WATERS

The following information is required for all TPDES permit applications.

Section 1. Domestic Drinking Water Supply (Instructions Page 64)

Is there a surface water intake for domestic drinking water supply located within 5 miles downstream from the point or proposed point of discharge?

☐ Yes ☒ No

If **no**, proceed it Section 2. **If yes**, provide the following:

Owner of the drinking water supply: N/A

Distance and direction to the intake: N/A

Attach a USGS map that identifies the location of the intake.

Attachment: N/A

Section 2. Discharge into Tidally Affected Waters (Instructions Page 64)

Does the facility discharge into tidally affected waters?

☐ Yes ☒ No

If **no**, proceed to Section 3. **If yes**, complete the remainder of this section. If no, proceed to Section 3.

A. Receiving water outfall

Width of the receiving water at the outfall, in feet: N/A

B. Oyster waters

Are there oyster waters in the vicinity of the discharge?

☐ Yes ☐ No

If yes, provide the distance and direction from outfall(s).

N/A

C. Sea grasses

Are there any sea grasses within the vicinity of the point of discharge?

☐ Yes ☐ No

If yes, provide the distance and direction from the outfall(s).

N/A

Section 3. Classified Segments (Instructions Page 64)

Is the discharge directly into (or within 300 feet of) a classified segment?

☐ Yes ☒ No

If yes, this Worksheet is complete.

If no, complete Sections 4 and 5 of this Worksheet.

Section 4. Description of Immediate Receiving Waters (Instructions Page 65)

Name of the immediate receiving waters: Unnamed drainage swale, thence to Medina River.

A. Receiving water type

Identify the appropriate description of the receiving waters.

☐ Stream

☐ Freshwater Swamp or Marsh

☐ Lake or Pond

Surface area, in acres: N/A

Average depth of the entire water body, in feet: N/A

Average depth of water body within a 500-foot radius of discharge point, in feet: N/A

☐ Man-made Channel or Ditch

☐ Open Bay

☐ Tidal Stream, Bayou, or Marsh

☒ Other, specify: Drainage swale

B. Flow characteristics

If a stream, man-made channel or ditch was checked above, provide the following. For existing discharges, check one of the following that best characterizes the area *upstream* of the discharge. For new discharges, characterize the area *downstream* of the discharge (check one).

☒ Intermittent - dry for at least one week during most years

☐ Intermittent with Perennial Pools - enduring pools with sufficient habitat to maintain significant aquatic life uses

☐ Perennial - normally flowing

Check the method used to characterize the area upstream (or downstream for new dischargers).

☒ USGS flow records

☐ Historical observation by adjacent landowners

☒ Personal observation

☒ Other, specify: Terracon Preliminary WOTUS Delineation Report; uploaded to FTPS (just in case, if needed for reference.

C. Downstream perennial confluences

List the names of all perennial streams that join the receiving water within three miles downstream of the discharge point.

Medina River

D. Downstream characteristics

Do the receiving water characteristics change within three miles downstream of the discharge (e.g., natural or man-made dams, ponds, reservoirs, etc.)?

☒ Yes ☐ No

If yes, discuss how.

Disposal into the Medina River; a perennial river.

E. Normal dry weather characteristics

Provide general observations of the water body during normal dry weather conditions.

Dry ditch, intermittent flow throughout the year; slightly vegetated.

Date and time of observation: 08/12/2024

Was the water body influenced by stormwater runoff during observations?

☐ Yes ☒ No

Section 5. General Characteristics of the Waterbody (Instructions Page 66)

A. Upstream influences

Is the immediate receiving water upstream of the discharge or proposed discharge site influenced by any of the following? Check all that apply.

☐ Oil field activities
☐ Urban runoff
☐ Upstream discharges
☐ Agricultural runoff
☐ Septic tanks
☒ Other(s), specify: Undeveloped land runoff

B. Waterbody uses

Observed or evidences of the following uses. Check all that apply.

- ☐ Livestock watering
- ☐ Irrigation withdrawal
- ☐ Fishing
- ☐ Domestic water supply
- ☐ Park activities
- ☐ Contact recreation
- ☐ Non-contact recreation
- ☐ Navigation
- ☐ Industrial water supply
- ☒ Other(s), specify: Drainage swale

C. Waterbody aesthetics

Check one of the following that best describes the aesthetics of the receiving water and the surrounding area.

- ☐ Wilderness: outstanding natural beauty; usually wooded or unpastured area; water clarity exceptional
- ☒ Natural Area: trees and/or native vegetation; some development evident (from fields, pastures, dwellings); water clarity discolored
- ☐ Common Setting: not offensive; developed but uncluttered; water may be colored or turbid
- ☐ Offensive: stream does not enhance aesthetics; cluttered; highly developed; dumping areas; water discolored

DOMESTIC WASTEWATER PERMIT APPLICATION WORKSHEET 6.0: INDUSTRIAL WASTE CONTRIBUTION

The following **is required** for **all publicly owned treatment works**.

Section 1. All POTWs (Instructions Page 89)

A. Industrial users (IUs)

Provide the number of each of the following types of industrial users (IUs) that discharge to your POTW and the daily flows from each user. See the Instructions for definitions of Categorical IUs, Significant IUs – non-categorical, and Other IUs.

If there are no users, enter 0 (zero).

Categorical IUs:

Number of IUs: 0 (zero)

Average Daily Flows, in MGD: N/A

Significant IUs – non-categorical:

Number of IUs: 0 (zero)

Average Daily Flows, in MGD: N/A

Other IUs:

Number of IUs: 0 (zero)

Average Daily Flows, in MGD: N/A

B. Treatment plant interference

In the past three years, has your POTW experienced treatment plant interference (see instructions)?

☐ Yes ☒ No

If yes, identify the dates, duration, description of interference, and probable cause(s) and possible source(s) of each interference event. Include the names of the IUs that may have caused the interference.

N/A

C. Treatment plant pass through

In the past three years, has your POTW experienced pass through (see instructions)?

☐ Yes ☒ No

If yes, identify the dates, duration, a description of the pollutants passing through the treatment plant, and probable cause(s) and possible source(s) of each pass through event. Include the names of the IUs that may have caused pass through.

N/A

D. Pretreatment program

Does your POTW have an approved pretreatment program?

☐ Yes ☒ No

If yes, complete Section 2 only of this Worksheet.

Is your POTW required to develop an approved pretreatment program?

☐ Yes ☒ No

If yes, complete Section 2.c. and 2.d. only, and skip Section 3.

If no to either question above, skip Section 2 and complete Section 3 for each significant industrial user and categorical industrial user.

Section 2. POTWs with Approved Programs or Those Required to Develop a Program (Instructions Page 90)

A. Substantial modifications

Have there been any **substantial modifications** to the approved pretreatment program that have not been submitted to the TCEQ for approval according to *40 CFR §403.18*?

☐ Yes ☐ No

If yes, identify the modifications that have not been submitted to TCEQ, including the purpose of the modification.

N/A

B. Non-substantial modifications

Have there been any **non-substantial modifications** to the approved pretreatment program that have not been submitted to TCEQ for review and acceptance?

☐ Yes ☐ No

If yes, identify all non-substantial modifications that have not been submitted to TCEQ, including the purpose of the modification.

N/A

C. Effluent parameters above the MAL

In Table 6.0(1), list all parameters measured above the MAL in the POTW's effluent monitoring during the last three years. Submit an attachment if necessary.

Table 6.0(1) – Parameters Above the MAL

Pollutant	Concentration	MAL	Units	Date
N/A	N/A	N/A	N/A	N/A

D. Industrial user interruptions

Has any SIU, CIU, or other IU caused or contributed to any problems (excluding interferences or pass throughs) at your POTW in the past three years?

☐ Yes ☐ No

If yes, identify the industry, describe each episode, including dates, duration, description of the problems, and probable pollutants.

N/A

Section 3. Significant Industrial User (SIU) Information and Categorical Industrial User (CIU) (Instructions Page 90)

A. General information

Company Name: N/A

SIC Code: N/A

Contact name: N/A

Address: N/A

City, State, and Zip Code: N/A

Telephone number: N/A

Email address: N/A

B. Process information

Describe the industrial processes or other activities that affect or contribute to the SIU(s) or CIU(s) discharge (i.e., process and non-process wastewater).

N/A

C. Product and service information

Provide a description of the principal product(s) or services performed.

N/A

D. Flow rate information

See the Instructions for definitions of "process" and "non-process wastewater."

Process Wastewater:

Discharge, in gallons/day: N/A

Discharge Type: ☐ Continuous ☐ Batch ☐ Intermittent

Non-Process Wastewater:

Discharge, in gallons/day: N/A

Discharge Type: ☐ Continuous ☐ Batch ☐ Intermittent

E. Pretreatment standards

Is the SIU or CIU subject to technically based local limits as defined in the *i*nstructions?

☐ Yes ☐ No

Is the SIU or CIU subject to categorical pretreatment standards found in *40 CFR Parts 405-471*?

☐ Yes ☐ No

If subject to categorical pretreatment standards, indicate the applicable category and subcategory for each categorical process.

Category: Subcategories: N/A

Click or tap here to enter text. N/A

Category: N/A

Subcategories: N/A

Category: N/A

Subcategories: N/A

Category: N/A

Subcategories: N/A

Category: N/A

Subcategories: N/A

F. Industrial user interruptions

Has the SIU or CIU caused or contributed to any problems (e.g., interferences, pass through, odors, corrosion, blockages) at your POTW in the past three years?

☐ Yes ☐ No

If yes, identify the SIU, describe each episode, including dates, duration, description of problems, and probable pollutants.

N/A

Attachment A

SPIF

TEXAS COMMISSION ON ENVIRONMENTAL QUALITY

SUPPLEMENTAL PERMIT INFORMATION FORM (SPIF)

FOR AGENCIES REVIEWING DOMESTIC OR INDUSTRIAL TPDES WASTEWATER PERMIT APPLICATIONS

TCEQ USE ONLY:

Application type: ____Renewal ____Major Amendment ____Minor Amendment ____New

County: _____ Segment Number: _____

Admin Complete Date: _____

Agency Receiving SPIF:

_____ Texas Historical Commission _____ U.S. Fish and Wildlife

_____ Texas Parks and Wildlife Department _____ U.S. Army Corps of Engineers

This form applies to TPDES permit applications only. (Instructions, Page 53)

Complete this form as a separate document. TCEQ will mail a copy to each agency as required by our agreement with EPA. If any of the items are not completely addressed or further information is needed, we will contact you to provide the information before issuing the permit. Address each item completely.

Do not refer to your response to any item in the permit application form. Provide each attachment for this form separately from the Administrative Report of the application. The application will not be declared administratively complete without this SPIF form being completed in its entirety including all attachments. Questions or comments concerning this form may be directed to the Water Quality Division's Application Review and Processing Team by email at WQ-ARPTeam@tceq.texas.gov or by phone at (512) 239-4671.

The following applies to all applications:

1. Permittee: City of Castroville

   Permit No. WQ00 10952001 EPA ID No. TX 0129364

   Address of the project (or a location description that includes street/highway, city/vicinity, and county):

   818 Alsace Avenue, in the City of Castroville, Medina County, Texas 78009

Provide the name, address, phone and fax number of an individual that can be contacted to answer specific questions about the property.

Prefix (Mr., Ms., Miss): Mr.

First and Last Name: Daniel Paxson

Credential (P.E, P.G., Ph.D., etc.): B Wastewater License

Title: Wastewater Superintendent

Mailing Address: 1209 Fiorella Street

City, State, Zip Code: Castroville, Texas 78009

Phone No.: 830-931-4090 Ext.: N/A Fax No.: N/A

E-mail Address: daniel.paxson@castrovilletx.gov

2. List the county in which the facility is located: Medina County
3. If the property is publicly owned and the owner is different than the permittee/applicant, please list the owner of the property.

N/A

4. Provide a description of the effluent discharge route. The discharge route must follow the flow of effluent from the point of discharge to the nearest major watercourse (from the point of discharge to a classified segment as defined in 30 TAC Chapter 307). If known, please identify the classified segment number.

Discharge to an unnamed natural drainage swale, thence to Medina River Below Medina Diversion Lake in Segment No. 1903 of the San Antonio River Basin.

5. Please provide a separate 7.5-minute USGS quadrangle map with the project boundaries plotted and a general location map showing the project area. Please highlight the discharge route from the point of discharge for a distance of one mile downstream. (This map is required in addition to the map in the administrative report).

Provide original photographs of any structures 50 years or older on the property.

Does your project involve any of the following? Check all that apply.

- ☐ Proposed access roads, utility lines, construction easements
- ☐ Visual effects that could damage or detract from a historic property's integrity
- ☐ Vibration effects during construction or as a result of project design
- ☐ Additional phases of development that are planned for the future
- ☐ Sealing caves, fractures, sinkholes, other karst features

☐ Disturbance of vegetation or wetlands

1. List proposed construction impact (surface acres to be impacted, depth of excavation, sealing of caves, or other karst features):

N/A

2. Describe existing disturbances, vegetation, and land use:

N/A

THE FOLLOWING ITEMS APPLY ONLY TO APPLICATIONS FOR NEW TPDES PERMITS AND MAJOR AMENDMENTS TO TPDES PERMITS

3. List construction dates of all buildings and structures on the property:

N/A

4. Provide a brief history of the property, and name of the architect/builder, if known.

N/A

Attachment B

Core Data Form

TCEQ Use Only

TCEQ Core Data Form

For detailed instructions on completing this form, please read the Core Data Form Instructions or call 512-239-5175.

SECTION I: General Information

1. Reason for Submission (*If other is checked please describe in space provided.*)

☐ New Permit, Registration or Authorization (*Core Data Form should be submitted with the program application.*)

☒ Renewal *(Core Data Form should be submitted with the renewal form)* ☐ Other

2. Customer Reference Number *(if issued)*	Follow this link to search for CN or RN numbers in Central Registry**	**3. Regulated Entity Reference Number** *(if issued)*
CN 600647614		**RN 101721645**

SECTION II: Customer Information

4. General Customer Information	**5. Effective Date for Customer Information Updates** (mm/dd/yyyy)	5/8/2025

☐ New Customer ☐ Update to Customer Information ☐ Change in Regulated Entity Ownership
☐ Change in Legal Name (Verifiable with the Texas Secretary of State or Texas Comptroller of Public Accounts)

The Customer Name submitted here may be updated automatically based on what is current and active with the Texas Secretary of State (SOS) or Texas Comptroller of Public Accounts (CPA).

6. Customer Legal Name *(If an individual, print last name first: eg: Doe, John)*	*If new Customer, enter previous Customer below:*
City of Castroville	

7. TX SOS/CPA Filing Number	**8. TX State Tax ID** (11 digits)	**9. Federal Tax ID** (9 digits)	**10. DUNS Number** *(if applicable)*
N/A	N/A	74-6000497	013891544

11. Type of Customer: ☐ Corporation ☐ Individual Partnership: ☐ General ☐ Limited
Government: ☒ City ☐ County ☐ Federal ☐ Local ☐ State ☐ Other ☐ Sole Proprietorship ☐ Other:

12. Number of Employees	**13. Independently Owned and Operated?**
☐ 0-20 ☒ 21-100 ☐ 101-250 ☐ 251-500 ☐ 501 and higher	☒ **Yes** ☐ **No**

14. Customer Role (Proposed or Actual) – *as it relates to the Regulated Entity listed on this form. Please check one of the following*

☐ Owner ☐ Operator ☒ Owner & Operator ☐ Other:
☐ Occupational Licensee ☐ Responsible Party ☐ VCP/BSA Applicant

15. Mailing Address:	1209 Fiorella St						
	City	Castroville	**State**	TX	**ZIP**	78009	**ZIP + 4** 4578

16. Country Mailing Information *(if outside USA)*	**17. E-Mail Address** *(if applicable)*
N/A	N/A

18. Telephone Number	**19. Extension or Code**	**20. Fax Number** *(if applicable)*

(830) 931-4090	0	(0) -

SECTION III: Regulated Entity Information

21. General Regulated Entity Information *(If 'New Regulated Entity" is selected, a new permit application is also required.)*

☐ New Regulated Entity ☐ Update to Regulated Entity Name ☐ Update to Regulated Entity Information

The Regulated Entity Name submitted may be updated, in order to meet TCEQ Core Data Standards (removal of organizational endings such as Inc, LP, or LLC).

22. Regulated Entity Name *(Enter name of the site where the regulated action is taking place.)*

City of Castroville Wastewater Treatment Facility

23. Street Address of the Regulated Entity: ***(No PO Boxes)***	818 Alsace Avenue							
	City	Castroville	**State**	TX	**ZIP**	78009	**ZIP + 4**	2919
24. County	Medina							

If no Street Address is provided, fields 25-28 are required.

25. Description to Physical Location:	N/A				
26. Nearest City			**State**		**Nearest ZIP Code**
N/A			NA		N/A

Latitude/Longitude are required and may be added/updated to meet TCEQ Core Data Standards. (Geocoding of the Physical Address may be used to supply coordinates where none have been provided or to gain accuracy).

27. Latitude (N) In Decimal:	N/A		**28. Longitude (W) In Decimal:**	N/A	
Degrees	Minutes	Seconds	Degrees	Minutes	Seconds
N/A	N/A	N/A	N/A	N/A	N/A

29. Primary SIC Code (4 digits)	**30. Secondary SIC Code** (4 digits)	**31. Primary NAICS Code** (5 or 6 digits)	**32. Secondary NAICS Code** (5 or 6 digits)
4952	N/A	221320	N/A

33. What is the Primary Business of this entity? *(Do not repeat the SIC or NAICS description.)*

Treat and discharge domestic wastewater.

34. Mailing Address:	**1209 Fiorella St**							
	City	**Castroville**	**State**	**TX**	**ZIP**	**78009**	**ZIP + 4**	**4578**
35. E-Mail Address:	**rcarrasco@castrovilletx.gov**							

36. Telephone Number	**37. Extension or Code**	**38. Fax Number** *(if applicable)*
(830) 931-4090	**N/A**	**(N/A) -**

39. TCEQ Programs and ID Numbers Check all Programs and write in the permits/registration numbers that will be affected by the updates submitted on this form. See the Core Data Form instructions for additional guidance.

☐ Dam Safety	☐ Districts	☐ Edwards Aquifer	☐ Emissions Inventory Air	☐ Industrial Hazardous Waste
☐ Municipal Solid Waste	☐ New Source Review Air	☐ OSSF	☐ Petroleum Storage Tank	☐ PWS
☐ Sludge	☐ Storm Water	☐ Title V Air	☐ Tires	☐ Used Oil
☐ Voluntary Cleanup	☒ Wastewater	☐ Wastewater Agriculture	☐ Water Rights	☐ Other:
	EPA ID: TX0129364			

SECTION IV: Preparer Information

40. Name:	Joseph Kim		41. Title:	Engineer Associate I
42. Telephone Number	**43. Ext./Code**	**44. Fax Number**	**45. E-Mail Address**	
(512) 338-1704	N/A	(N/A) -	jkim@hwlochner.com	

SECTION V: Authorized Signature

46. By my signature below, I certify, to the best of my knowledge, that the information provided in this form is true and complete, and that I have signature authority to submit this form on behalf of the entity specified in Section II, Field 6 and/or as required for the updates to the ID numbers identified in field 39.

Company:	City of Castroville	Job Title:	City Administrator	
Name *(In Print)*:	Scott Dixon		Phone:	(830) 931- 4070
Signature:			Date:	Nov. 04, 2024

Attachment C

Plain Language Summary

TEXAS COMMISSION ON ENVIRONMENTAL QUALITY

PLAIN LANGUAGE SUMMARY FOR TPDES OR TLAP PERMIT APPLICATIONS

Plain Language Summary Template and Instructions for Texas Pollutant Discharge Elimination System (TPDES) and Texas Land Application (TLAP) Permit Applications

Applicants should use this template to develop a plain language summary as required by Title 30, Texas Administrative Code (30 TAC), Chapter 39, Subchapter H. Applicants may modify the template as necessary to accurately describe their facility as long as the summary includes the following information: (1) the function of the proposed plant or facility; (2) the expected output of the proposed plant or facility; (3) the expected pollutants that may be emitted or discharged by the proposed plant or facility; and (4) how the applicant will control those pollutants, so that the proposed plant will not have an adverse impact on human health or the environment.

Fill in the highlighted areas below to describe your facility and application in plain language. Instructions and examples are provided below. Make any other edits necessary to improve readability or grammar and to comply with the rule requirements.

If you are subject to the alternative language notice requirements in 30 TAC Section 39.426, **you must provide a translated copy of the completed plain language summary in the appropriate alternative language as part of your application package**. For your convenience, a Spanish template has been provided below.

ENGLISH TEMPLATE FOR TPDES or TLAP NEW/RENEWAL/AMENDMENT APPLICATIONS DOMESTIC WASTEWATER/STORMWATER

The following summary is provided for this pending water quality permit application being reviewed by the Texas Commission on Environmental Quality as required by 30 TAC Chapter 39. The information provided in this summary may change during the technical review of the application and is not a federal enforceable representation of the permit application.

The City of Castroville (CN600647614) operates the City of Castroville Wastewater Treatment Facility (RN101721645), a domestic wastewater treatment plant. The facility is located at 818 Alsace Avenue, in Castroville, Medina County, Texas 78009. This application is for a renewal to discharge treated domestic wastewater effluent at a daily average flow not to exceed 0.70 MGD via Outfall 002 (discharge to a drainage swale, thence to Medina River).

Discharges from the facility are expected to contain Carbonaceous Biochemical Oxygen Demand ($CBOD_5$), Total Suspended Solids (TSS), Ammonia Nitrogen (NH_3-N), Total Phosphorus, and Escherichia coli. Domestic wastewater is treated by the following process. Wastewater enters the treatment plant through a drum screen where primary solids are removed through a screw conveyor. The flow stream continues to an activated sludge carousel operating in complete mix mode. Flow from the oxidation ditch proceeds to a clarifier where suspended solids are removed from the flow stream. Solids from the clarifier are stored in the sludge holding basin before they are dewatered in the sludge screw press. The dewatered sludge is

trucked off to a landfill. Clarified effluent continues to a disc cloth filter where suspended solids are strained from the effluent as a polishing step of the treatment, and then to a chlorine contact chamber where the effluent is disinfected before it is discharged into a drainage swale which goes to Medina River.

PLANTILLA EN ESPAÑOL PARA SOLICITUDES NUEVAS/RENOVACIONES/ENMIENDAS DE TPDES o TLAP

AGUAS RESIDUALES DOMÉSTICAS /AGUAS PLUVIALES

El siguiente resumen se proporciona para esta solicitud de permiso de calidad del agua pendiente que está siendo revisada por la Comisión de Calidad Ambiental de Texas según lo requerido por el Capítulo 39 del Código Administrativo de Texas 30. La información proporcionada en este resumen puede cambiar durante la revisión técnica de la solicitud y no es una representación ejecutiva fedérale de la solicitud de permiso.

La Ciudad de Castroville (CN600647614) opera la Planta de Tratamiento de Aguas Residuales de la Ciudad de Castroville (RN101721645), una planta de tratamiento de aguas residuales domésticas. La instalación está ubicada en 818 Alsace Avenue, en La Ciudad de Castroville, Condado de Medina, Texas 78009. Esta solicitud es para una renovación de descarga de efluente de aguas residuales domésticas tratadas con un caudal promedio diario que no exceda los 0.70 MGD a través del punto de descarga 002 (descarga a un canal de drenaje, y luego al río Medina).

Se espera que las descargas de la instalación contengan Demanda Bioquímica de Oxígeno Carbonáceo (CBOD5), Sólidos Suspendidos Totales (TSS), Nitrógeno Amoniacal (NH3-N), Fósforo Total, y Escherichia coli.. Aguas residuales domésticas. está tratado por mediante el siguiente proceso. Las aguas residuales ingresan a la planta de tratamiento a través de una criba de tambor donde los sólidos primarios se eliminan mediante un transportador de tornillo. La corriente de flujo continúa hacia un carrusel de lodos activados que opera en modo de mezcla completa. El flujo del canal de oxidación pasa a un clarificador donde se eliminan los sólidos en suspensión de la corriente de flujo. Los sólidos del clarificador se almacenan en la balsa de retención de lodos antes de ser deshidratados en una prensa de tornillo para lodos. Los lodos deshidratados se transportan en camiones a un vertedero. El efluente clarificado continúa hacia un filtro de tela de disco, donde se filtran los sólidos en suspensión del efluente como un paso de pulido del tratamiento, y luego a una cámara de contacto con cloro donde se desinfecta el efluente antes de ser descargado en un canal de drenaje que desemboca en el río Medina.

INSTRUCTIONS

1. Enter the name of applicant in this section. The applicant name should match the name associated with the customer number.
2. Enter the Customer Number in this section. Each Individual or Organization is issued a unique 11-digit identification number called a CN (e.g. CN123456789).
3. Choose “operates” in this section for existing facility applications or choose “proposes to operate” for new facility applications.
4. Enter the name of the facility in this section. The facility name should match the name associated with the regulated entity number.
5. Enter the Regulated Entity number in this section. Each site location is issued a unique 11-digit identification number called an RN (e.g. RN123456789).
6. Choose the appropriate article (a or an) to complete the sentence.
7. Enter a description of the facility in this section. For example: steam electric generating facility, nitrogenous fertilizer manufacturing facility, etc.
8. Choose “is” for an existing facility or “will be” for a new facility.
9. Enter the location of the facility in this section.
10. Enter the City nearest the facility in this section.
11. Enter the County nearest the facility in this section.
12. Enter the zip code for the facility address in this section.
13. Enter a summary of the application request in this section. For example: renewal to discharge 25,000 gallons per day of treated domestic wastewater, new application to discharge process wastewater and stormwater on an intermittent and flow-variable basis, or major amendment to reduce monitoring frequency for pH, etc. If more than one outfall is included in the application, provide applicable information for each individual outfall.
14. List all pollutants expected in the discharge from this facility in this section. If applicable, refer to the pollutants from any federal numeric effluent limitations that apply to your facility.
15. Enter the discharge types from your facility in this section (e.g., stormwater, process wastewater, once through cooling water, etc.)
16. Choose the appropriate verb tense to complete the sentence.
17. Enter a description of the wastewater treatment used at your facility. Include a description of each process, starting with initial treatment and finishing with the outfall/point of disposal. Use additional lines for individual discharge types if necessary.

Questions or comments concerning this form may be directed to the Water Quality Division’s Application Review and Processing Team by email at WQ-ARPTeam@tceq.texas.gov or by phone at (512) 239-4671.

Example

Individual Industrial Wastewater Application

The following summary is provided for this pending water quality permit application being reviewed by the Texas Commission on Environmental Quality as required by 30 TAC Chapter 39. The information provided in this summary may change during the technical review of the application and are not federal enforceable representations of the permit application.

ABC Corporation (CN600000000) operates the Starr Power Station (RN10000000000), a two-unit gas-fired electric generating facility. Unit 1 has a generating capacity of 393 megawatts (MWs) and Unit 2 has a generating capacity of 528 MWs. The facility is located at 1356 Starr Street, near the City of Austin, Travis County, Texas 78753.

This application is for a renewal to discharge 870,000,000 gallons per day of once through cooling water, auxiliary cooling water, and also authorizes the following waste streams monitored inside the facility (internal outfalls) before it is mixed with the other wastewaters authorized for discharge via main Outfall 001, referred to as “previously monitored effluents” (low-volume wastewater, metal-cleaning waste, and stormwater (from diked oil storage area yards and storm drains)) via Outfall 001. Low-volume waste sources, metal-cleaning waste, and stormwater drains on a continuous and flow-variable basis via internal Outfall 101.

The discharge of once through cooling water via Outfall 001 and low-volume waste and metal-cleaning waste via Outfall 101 from this facility is subject to federal effluent limitation guidelines at 40 CFR Part 423. The pollutants expected from these discharges based on 40 CFR Part 423 are: free available chlorine, total residual chlorine, total suspended solids, oil and grease, total iron, total copper, and pH. Temperature is also expected from these discharges. Additional potential pollutants are included in the Industrial Wastewater Application Technical Report, Worksheet 2.0.

Cooling water and boiler make-up water are supplied by Lake Starr Reservoir. The City of Austin municipal water plant (CN600000000, PWS 00000) supplies the facility’s potable water and serves as an alternate source of boiler make-up water. Water from the Lake Starr Reservoir is withdrawn at the intake structure and treated with sodium hypochlorite to prevent biofouling and sodium bromide as a chlorine enhancer to improve efficacy and then passed through condensers and auxiliary equipment on a once-through basis to cool equipment and condense exhaust steam.

Low-volume wastewater from blowdown of boiler Units 1 and 2 and metal-cleaning wastes receive no treatment prior to discharge via Outfall 101. Plant floor and equipment drains and stormwater runoff from diked oil storage areas, yards, and storm drains are routed through an oil and water separator prior to discharge via Outfall 101. Domestic wastewater, blowdown, and backwash water from the service water filter, clarifier, and sand filter are routed to the Starr Creek Domestic Sewage Treatment Plant, TPDES Permit No. WQ0010000001, for treatment and disposal. Metal-cleaning waste from equipment cleaning is generally disposed of off-site.

Attachment D

Admin Report 1.0 – USGS Map

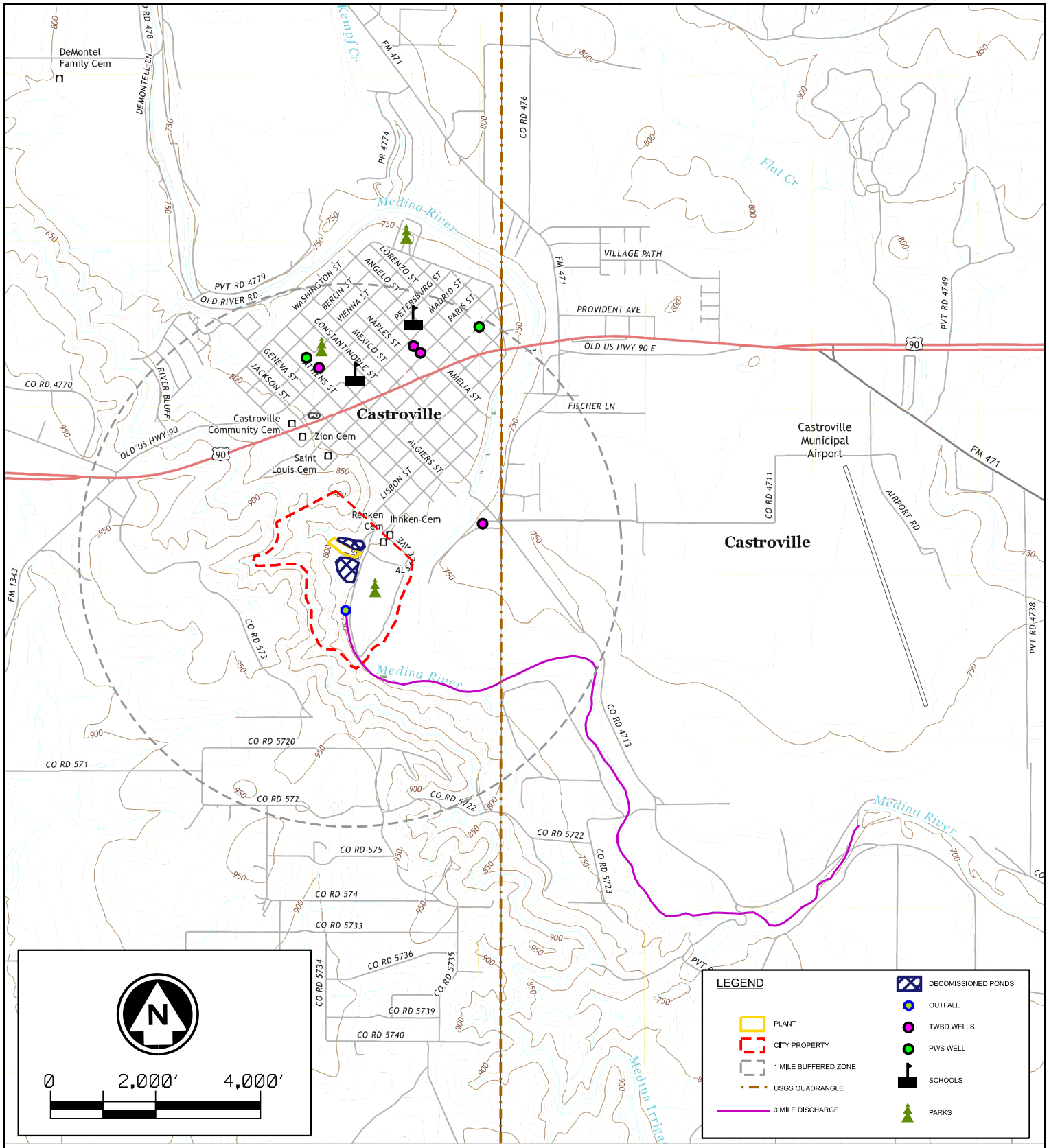

K·FRIESE + ASSOCIATES
A LOCHNER COMPANY

City of Castroville TPDES PERMIT RENEWAL

SITE VICINITY

7/17/2024

Project location on 2022 USGS Topographic Base

Scale: 1: 24,000

Attachment E

SPIF – USGS Map

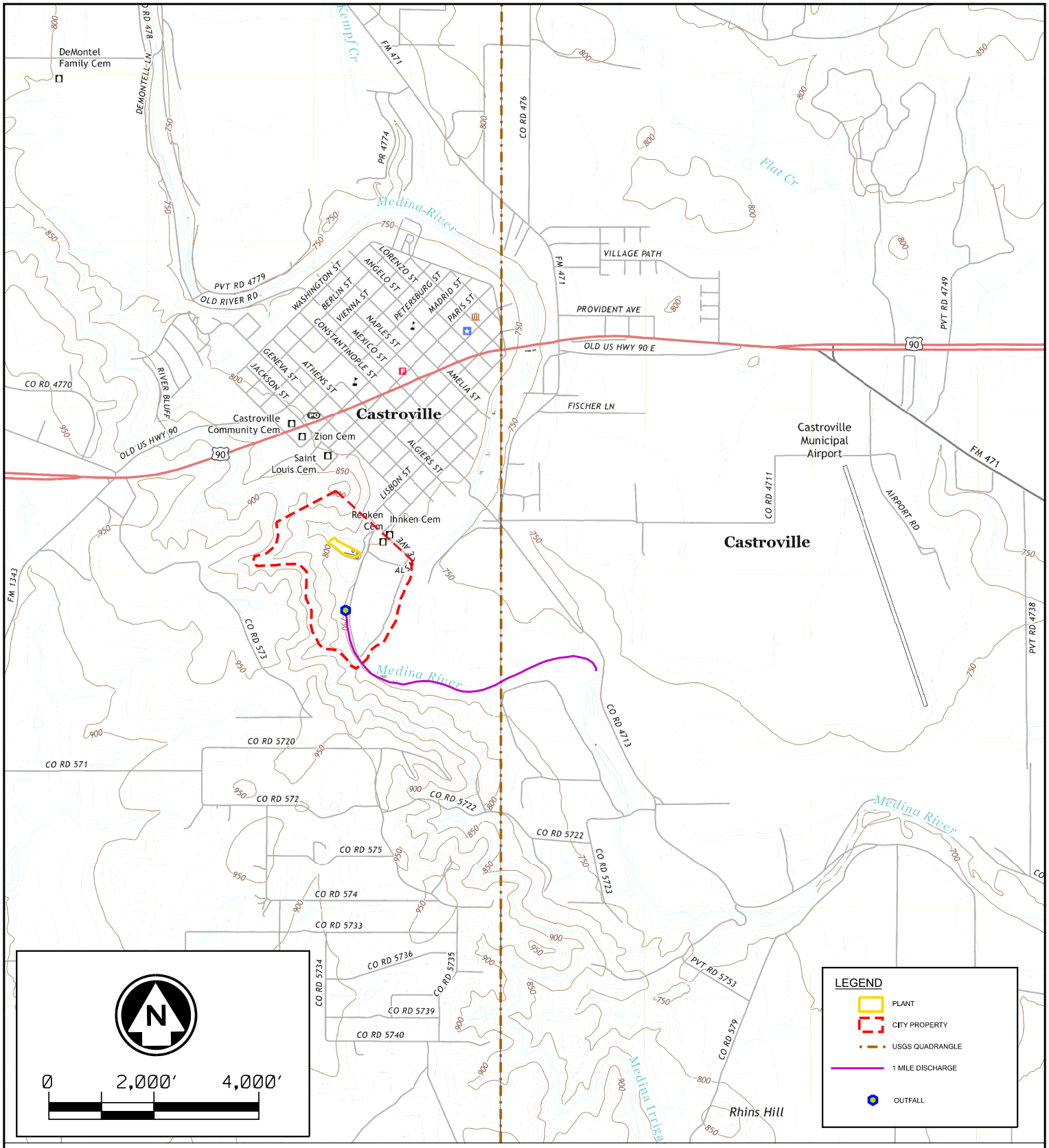

K·FRIESE + ASSOCIATES
A LOCHNER COMPANY

City of Castroville TPDES PERMIT RENEWAL

SITE VICINITY

7/17/2024

Project location on 2022 USGS Topographic Base

Scale: 1: 24,000

Attachment F

SPIF – Flow Diagram

PROCESS FLOW DIAGRAM

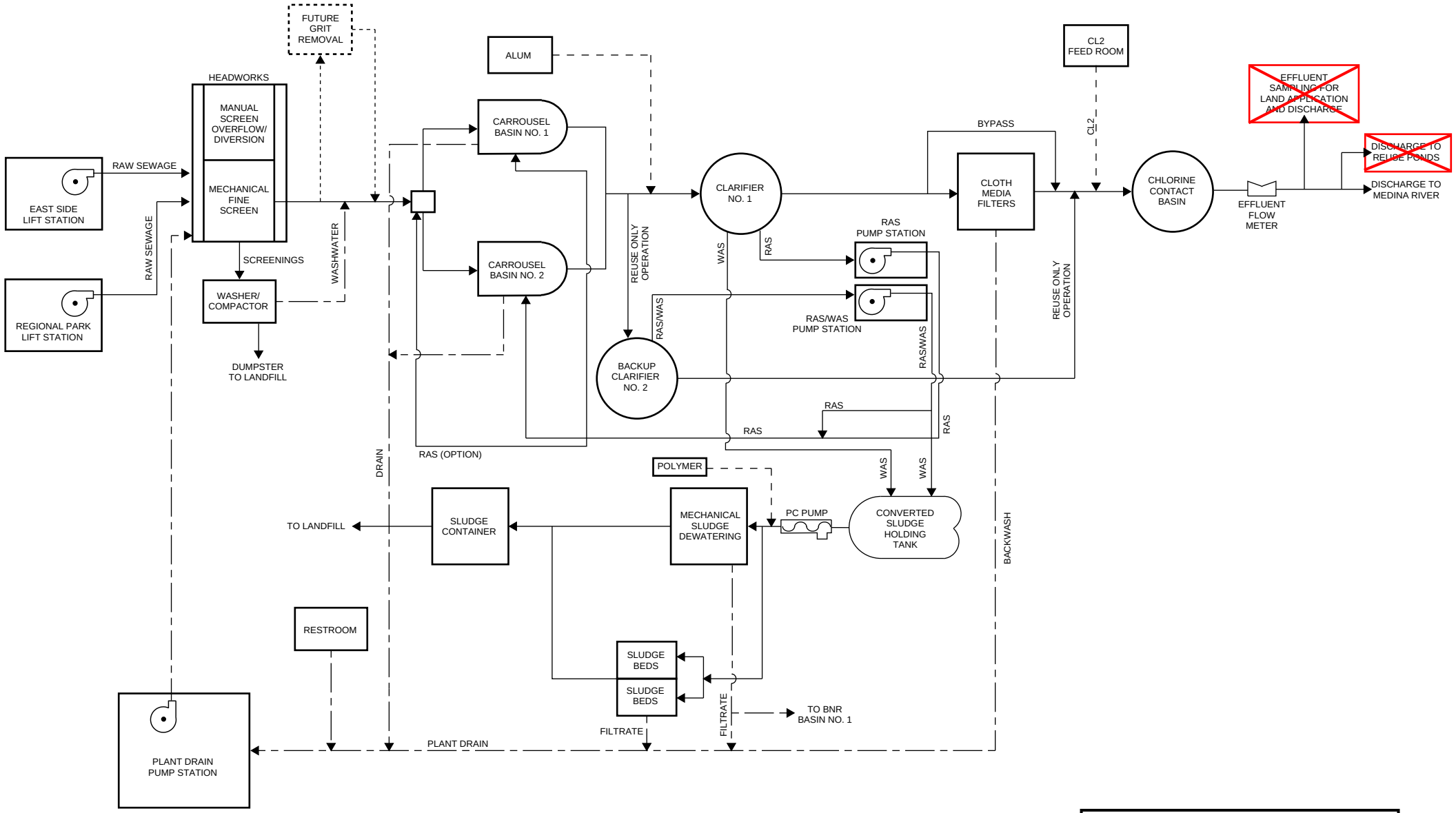

LEGEND

- LIQUID PROCESS
- SOLIDS
- RECYCLE
- FUTURE
- CHEMICAL
- REMOVING TLAP

Attachment G

Tech Report 1.0 – Site Drawing

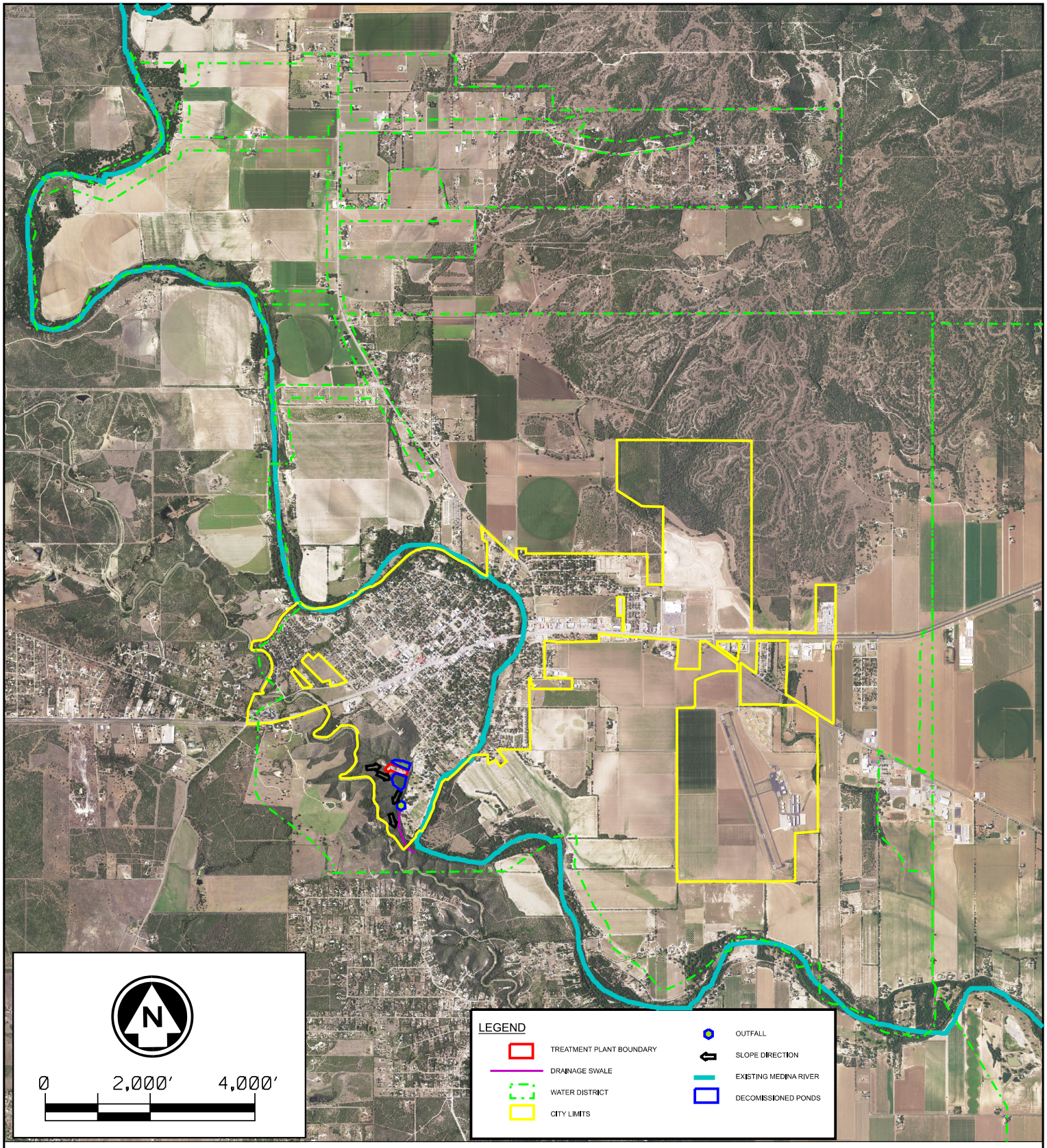

K·FRIESE + ASSOCIATES
A LOCHNER COMPANY

City of Castroville TPDES PERMIT RENEWAL

SITE DRAWING

7/17/2024

Project location on 2022 USGS Topographic Base

Scale: 1: 24,000

Attachment H

Tech Report 1.0 – Effluent Analysis Data

POLLUTION CONTROL SERVICES

Report of Sample Analysis

Client Information	Sample Information	Laboratory Information
John Gomez **Castroville, City of** **703 Paris St.** **Castroville, TX 78009**	**Project Name: Permit Renewal** **Sample ID: Effluent** **Matrix: Non-Potable Water** **Date/Time Taken: 10/23/2024 0730**	**PCS Sample #: 779473 Page 1 of 1** **Date/Time Received: 10/23/2024 13:38** **Report Date: 11/5/2024** **Approved by:** Chuck Wallgren, President

Test Description	Result	Units	RL	Analysis Date/Time	Method	Analyst
E. coli. (Enumeration-MPN) 18	0	CFU/100ml	1	10/23/2024 14:45	9223 IDEXX Quanti-Tray	CLH
Chloride_IC	150	mg/L	2	10/24/2024 11:40	EPA 300.0	JAS
Conductivity, Specific	1,007	µmhos/cm at 25° C	1	10/24/2024 11:18	SM 2510B	LCC
Nitrate-N_IC	5.7	mg/L	0.2	10/24/2024 11:40	EPA 300.0	JAS
Sulfate_IC	43	mg/L	2	10/24/2024 11:40	EPA 300.0	JAS
Total Dissolved Solids	600	mg/L	10	10/28/2024 14:20	SM 2540C	PML
Kjeldahl-N, Total	2	mg/L	1	10/31/2024 11:20	SM 4500-N B/C	BMR

Quality Assurance Summary

Test Description	Precision	Limit	LCL	MS	MSD	UCL	LCS	LCS Limit	Blank
E. coli. (Enumeration-MPN) 18	N/A	N/A	N/A			N/A			
Chloride_IC	1	10	95	99	98	102	102	85 - 115	
Conductivity, Specific	N/A	N/A	N/A			N/A			
Nitrate-N_IC	1	20	70	99	100	130	104	85 - 115	
Sulfate_IC	1	10	94	98	97	101	106	85 - 115	
Total Dissolved Solids	<1	10	N/A	N/A	N/A	N/A			
Kjeldahl-N, Total	3	10	90	106	103	109	106	85 - 115	<1

Quality Statement: All supporting quality data adhered to data quality objectives and test results meet the requirements of NELAC unless otherwise noted as flagged exceptions or in a case narrative attachment. Reports with full quality data deliverables are available on request.

These analytical results relate only to the sample tested.
All data is reported on an 'As Is' basis unless designated as 'Dry Wt'.
RL = Reporting Limits

www.pcslab.net
chuck@pcslab.net
1532 Universal City Blvd
Universal City, TX 78148-3318
Main: 210-340-0343
Fax: 210-658-7903
This report cannot be reproduced or duplicated, except in full, without prior written consent from Pollution Control Services.

POLLUTION CONTROL SERVICES

Chain of Custody Number: 779473

MULTIPLE SAMPLE ANALYSIS REQUEST AND CHAIN OF CUSTODY FORM

Stamp 1st sample and COC as same number

CUSTOMER INFORMATION

Name: Castroville, City of

REPORT INFORMATION

Attention: Daniel Paxson | Phone: (830) 931-4090 | Fax: (830) 931-9186

SAMPLE INFORMATION

Project Information: Permit Renewal

Report "Soils" ☐ As Is ☐ Dry Wt.

Collected By: Daniel Paxson

Client / Field Sample ID	Collected Date	Collected Time	Field Chlorine Residual mg/L	Composite or Grab	Matrix: DW-Drinking Water; NPW-Non-potable water; WW-Wastewater; LW-Liquid Waste	Container Type	Container Number	Preservative	Requested Analysis: NO3, TKN	Sulfate, Chloride	TDS, ~~CaCO3~~	Conductivity	E.Coli	Instructions/Comments / PCS Sample Number
Effluent	Start: 10/23/24 End:	Start: 7:30 am End:		☐C ☒G	☐ DW ☒ NPW ☐ WW ☐ Soil ☐ Sludge ☐ LW ☐ Other	☒P ☐G ☐O	2	☐ H_2SO_4 ☐ HNO_3 ☐ H_3PO_4 ☐ NaOH ☒ ICE ☐	★	★	★	★	★	☒S ☒B ☐N ☐HEM Other:
	Start: End:	Start: End:		☐C ☐G	☐ DW ☐ NPW ☐ WW ☐ Soil ☐ Sludge ☐ LW ☐ Other	☐P ☐G ☐O		☐ H_2SO_4 ☐ HNO_3 ☐ H_3PO_4 ☐ NaOH ☐ ICE ☐						☐S ☐B ☐N ☐HEM Other:
	Start: End:	Start: End:		☐C ☐G	☐ DW ☐ NPW ☐ WW ☐ Soil ☐ Sludge ☐ LW ☐ Other	☐P ☐G ☐O		☐ H_2SO_4 ☐ HNO_3 ☐ H_3PO_4 ☐ NaOH ☐ ICE ☐						☐S ☐B ☐N ☐HEM Other:
	Start: End:	Start: End:		☐C ☐G	☐ DW ☐ NPW ☐ WW ☐ Soil ☐ Sludge ☐ LW ☐ Other	☐P ☐G ☐O		☐ H_2SO_4 ☐ HNO_3 ☐ H_3PO_4 ☐ NaOH ☐ ICE ☐						☐S ☐B ☐N ☐HEM Other:
	Start: End:	Start: End:		☐C ☐G	☐ DW ☐ NPW ☐ WW ☐ Soil ☐ Sludge ☐ LW ☐ Other	☐P ☐G ☐O		☐ H_2SO_4 ☐ HNO_3 ☐ H_3PO_4 ☐ NaOH ☐ ICE ☐						☐S ☐B ☐N ☐HEM Other:
	Start: End:	Start: End:		☐C ☐G	☐ DW ☐ NPW ☐ WW ☐ Soil ☐ Sludge ☐ LW ☐ Other	☐P ☐G ☐O		☐ H_2SO_4 ☐ HNO_3 ☐ H_3PO_4 ☐ NaOH ☐ ICE ☐						☐S ☐B ☐N ☐HEM Other:
	Start: End:	Start: End:		☐C ☐G	☐ DW ☐ NPW ☐ WW ☐ Soil ☐ Sludge ☐ LW ☐ Other	☐P ☐G ☐O		☐ H_2SO_4 ☐ HNO_3 ☐ H_3PO_4 ☐ NaOH ☐ ICE ☐						☐S ☐B ☐N ☐HEM Other:
	Start: End:	Start: End:		☐C ☐G	☐ DW ☐ NPW ☐ WW ☐ Soil ☐ Sludge ☐ LW ☐ Other	☐P ☐G ☐O		☐ H_2SO_4 ☐ HNO_3 ☐ H_3PO_4 ☐ NaOH ☐ ICE ☐						☐S ☐B ☐N ☐HEM Other:
	Start: End:	Start: End:		☐C ☐G	☐ DW ☐ NPW ☐ WW ☐ Soil ☐ Sludge ☐ LW ☐ Other	☐P ☐G ☐O		☐ H_2SO_4 ☐ HNO_3 ☐ H_3PO_4 ☐ NaOH ☐ ICE ☐						☐S ☐B ☐N ☐HEM Other:

Instructions/Comments: A - T-Alk (as CaCO3) Not needed for TCEQ minor Permit Renewal - 11/4/24 ar

PCS Sample Number: 779473

Required Turnaround: ☐ Routine (6-10 days) | ***EXPEDITE:*** (See Surcharge Schedule) ☐ < 8 Hrs. ☐ < 16 Hrs. ☐ < 24 Hrs. ☐ 5 days ☐ Other: _____ ***Rush Charges Authorized by:***

Sample Archive/Disposal: ☐ Laboratory Standard ☐ Hold for client pick up | **Container Type:** P = Plastic, G = Glass, O = Other _____ | Carrier ID: _____

Relinquished By:	Date: 10/23/24	Time: 12:46pm	Received By:	Date: 10-23-24	Time: 12:45pm
Relinquished By:	Date: 10-23-24	Time: 1:38pm	Received By: Jose Aguilera	Date: 10-23-24	Time: 1338

1532 Universal City Blvd., Ste. 100, Universal City, Texas 78148
P (210) 340-0343 or (800) 880-4616 - F (210) 658-7903

Login at www.pcslab.net

Pollution Control Services

Sample Log-In Checklist

PCS Sample No(s) 779473 **COC No.** 779473

Client/Company Name: Castroville **Checklist Completed by:** JAA

Sample Delivery to Lab Via:
Client Drop Off ✓ Commercial Carrier: Bus ____ UPS ____ Lone Star ____ FedEx ____ USPS ____
PCS Field Services: Collection/Pick Up ___ Other: ____

Sample Kit/Coolers
Sample Kit/Cooler? Yes ✓ No ____ Sample Kit/Cooler: Intact? Yes ✓ No ___
Custody Seals on Sample Kit/Cooler: Not Present ✓ If Present, Intact ___ Broken ___
Sample Containers Intact; Unbroken and Not Leaking? Yes ✓ No ___
Custody Seals on Sample Bottles: Not Present ✓ If Present, Intact ___ Broken ___
COC Present with Shipment or Delivery or Completed at Drop Off? Yes ✓ No ___
Has COC sample date/time and other pertinent information been provided by client/sampler? Yes: ✓ No: ___
Has COC been properly Signed when Received/Relinquished? Yes ✓ No ___
Does COC agree with Sample Bottle Information, Bottle Types, Preservation, etc.? Yes ✓ No ___
All Samples Received before Hold Time Expiration? Yes ✓ No ___
Sufficient Sample Volumes for Analysis Requested? Yes ✓ No ___
Zero Headspace in VOA Vial? Yes ___ No ___

Sample Preservation:
* ***Cooling:*** **Not Required** ____ or **Required** ✓
If cooling required, record temperature of submitted samples Observed/Corrected 7 / 4 °C
Is Ice Present in Sample Kit/Cooler? ✓ Yes ____ No Samples received same day as collected? ✓ Yes ____ No
Lab Thermometer Make and Serial Number: Vaughan 1807009583 Other: ____

Acid Preserved Sample - If present, is pH <2? **Yes** ___ **No** ___ ** ____H_2SO_4 ____HNO_3 ____H_3PO_4
Base Preserved Sample - If present, is pH >12? Yes ___ No ___ ____NaOH
Other Preservation: ____ If Present, Meets Requirements? Yes ____ No ____
Sample Preservations Checked by: ____ Date ____ Time ____
pH paper used to check sample preservation (PCS log #): ____ (HEM pH checked at analysis).
Samples Preserved/Adjusted by Lab:

Lab #	Parameters Preserved	Preservative Used	Log #
	TKN	~~018/2004~~ JAA H_2SO_4	0181200 1

Adjusted by Tech/Analyst: JAA Date: 10-23-24 Time: 1344

Client Notification/ Documentation for "No" Responses Above/ Discrepancies/ RevisionComments
Person Notified: ____ Contacted by: ____
Notified Date: ____ Time: ____
Method of Contact: At Drop Off: ____ Phone ___ Left Voice Mail ____ E-Mail ____ Fax ____
Unable to Contact ____ Authorized Laboratory to Proceed : ____ (Lab Director)
Regarding / Comments: ____

Actions taken to correct problems/discrepancies: ____

Receiving qualifier needed (*requires client notification above*) Temp. ___ Holding Time ___ Initails: ____
Receiving qualifier entered into LIMS at login Initial/Date: ____
Revision Comments: ____

POLLUTION CONTROL SERVICES

Report of Sample Analysis

Client Information	Sample Information	Laboratory Information
John Gomez **Castroville, City of** **703 Paris St.** **Castroville, TX 78009**	**Project Name: Castroville** **Sample ID: Effluent** **Matrix: Non-Potable Water** **Date/Time Taken: 10/21/2024 1300**	**PCS Sample #: 779032 Page 1 of 1** **Date/Time Received: 10/21/2024 14:05** **Report Date: 10/28/2024** **Approved by:** Chuck Wallgren, President

Test Description	Result	Units	RL	Analysis Date/Time	Method	Analyst
CBOD5	5	mg/L	3	10/22/2024 11:11	SM 5210 B	GQM
Phosphorus, Total	1.54	mg/L	0.10	10/28/2024 04:40	SM 4500-P/B/E	JAS
Total Suspended Solids	1	mg/L	1	10/22/2024 14:05	SM 2540 D	PML
Ammonia-N (ISE)	<0.1	mg/L	0.1	10/22/2024 10:50	SM 4500-NH3 D	BMR

Quality Assurance Summary

Test Description	Precision	Limit	LCL	MS	MSD	UCL	LCS	LCS Limit	Blank
CBOD5	<1	23	N/A	N/A	N/A	N/A	187	167 - 228	
Phosphorus, Total	<1	10	91	98	98	103	101	85 - 115	
Total Suspended Solids	3	10	N/A			N/A			
Ammonia-N (ISE)	1	10	80	94	95	120	89	85 - 115	

Quality Statement: All supporting quality data adhered to data quality objectives and test results meet the requirements of NELAC unless otherwise noted as flagged exceptions or in a case narrative attachment. Reports with full quality data deliverables are available on request.

These analytical results relate only to the sample tested.
All data is reported on an 'As Is' basis unless designated as 'Dry Wt'.
RL = Reporting Limits
QC Data Reported in %, Except BOD in mg/L

www.pcslab.net
chuck@pcslab.net
1532 Universal City Blvd
Universal City, TX 78148-3318
Main: 210-340-0343
Fax: 210-658-7903
This report cannot be reproduced or duplicated, except in full, without prior written consent from Pollution Control Services.

POLLUTION CONTROL SERVICES

Report of Sample Analysis

Client Information	Sample Information	Laboratory Information
John Gomez **Castroville, City of** **703 Paris St.** **Castroville, TX 78009**	**Project Name: Castroville** **Sample ID: Influent** **Matrix: Non-Potable Water** **Date/Time Taken: 10/21/2024 1045**	**PCS Sample #: 779033 Page 1 of 1** **Date/Time Received: 10/21/2024 14:05** **Report Date: 10/28/2024** **Approved by:** Chuck Wallgren, President

Test Description	Result	Units	RL	Analysis Date/Time	Method	Analyst
CBOD5	230	mg/L	3	10/22/2024 11:23	SM 5210 B	GQM
Phosphorus, Total	5.04	mg/L	0.10	10/28/2024 04:50	SM 4500-P/B/E	JAS
Total Suspended Solids	175	mg/L	1	10/22/2024 14:05	SM 2540 D	PML
Ammonia-N (ISE)	36.5	mg/L	0.1	10/22/2024 10:50	SM 4500-NH3 D	BMR

Quality Assurance Summary

Test Description	Precision	Limit	LCL	MS	MSD	UCL	LCS	LCS Limit	Blank
CBOD5	<1	23	N/A	N/A	N/A	N/A	187	167 - 228	
Phosphorus, Total	<1	10	91	96	95	103	101	85 - 115	
Total Suspended Solids	3	10	N/A			N/A			
Ammonia-N (ISE)	1	10	80	94	95	120	89	85 - 115	

Quality Statement: All supporting quality data adhered to data quality objectives and test results meet the requirements of NELAC unless otherwise noted as flagged exceptions or in a case narrative attachment. Reports with full quality data deliverables are available on request.

These analytical results relate only to the sample tested.
All data is reported on an 'As Is' basis unless designated as 'Dry Wt'.
RL = Reporting Limits
QC Data Reported in %, Except BOD in mg/L

www.pcslab.net
chuck@pcslab.net
1532 Universal City Blvd
Universal City, TX 78148-3318
Main: 210-340-0343
Fax: 210-658-7903
This report cannot be reproduced or duplicated, except in full, without prior written consent from Pollution Control Services.

POLLUTION CONTROL SERVICES

Report of Sample Analysis

Client Information	Sample Information	Laboratory Information
John Gomez **Castroville, City of** **703 Paris St.** **Castroville, TX 78009**	**Project Name: Castroville** **Sample ID: East & West Pond** **Matrix: Non-Potable Water** **Date/Time Taken: 10/21/2024 1010**	**PCS Sample #: 779034 Page 1 of 1** **Date/Time Received: 10/21/2024 14:05** **Report Date: 10/28/2024** **Approved by:** Chuck Wallgren, President

Test Description	Result	Units	RL	Analysis Date/Time	Method	Analyst
E. coli. (Enumeration-MPN) 18	41	CFU/100ml	1	10/21/2024 15:10	9223 IDEXX Quanti-Tray	CLH
CBOD5	<3	mg/L	3	10/22/2024 11:37	SM 5210 B	GQM
Total Suspended Solids	7	mg/L	1	10/22/2024 14:05	SM 2540 D	PML

Quality Assurance Summary

Test Description	Precision	Limit	LCL	MS	MSD	UCL	LCS	LCS Limit	Blank
E. coli. (Enumeration-MPN) 18	N/A	N/A	N/A			N/A			
CBOD5	<1	23	N/A	N/A	N/A	N/A	187	167 - 228	
Total Suspended Solids	3	10	N/A			N/A			

Quality Statement: All supporting quality data adhered to data quality objectives and test results meet the requirements of NELAC unless otherwise noted as flagged exceptions or in a case narrative attachment. Reports with full quality data deliverables are available on request.

These analytical results relate only to the sample tested.
All data is reported on an 'As Is' basis unless designated as 'Dry Wt'.
RL = Reporting Limits
QC Data Reported in %, Except BOD in mg/L

www.pcslab.net
chuck@pcslab.net
1532 Universal City Blvd
Universal City, TX 78148-3318
Main: 210-340-0343
Fax: 210-658-7903
This report cannot be reproduced or duplicated, except in full, without prior written consent from Pollution Control Services.

POLLUTION CONTROL SERVICES

Report of Sample Analysis

Client Information	Sample Information	Laboratory Information
John Gomez **Castroville, City of** **703 Paris St.** **Castroville, TX 78009**	**Project Name: Castroville** **Sample ID: Effluent E. Coli** **Matrix: Non-Potable Water** **Date/Time Taken: 10/21/2024 0950**	**PCS Sample #: 779035 Page 1 of 1** **Date/Time Received: 10/21/2024 14:05** **Report Date: 10/22/2024** Approved by: Chuck Wallgren, President

Test Description	Result	Units	RL	Analysis Date/Time	Method	Analyst
E. coli. (Enumeration-MPN) 18	0	CFU/100ml	1	10/21/2024 15:10	9223 IDEXX Quanti-Tray	CLH

Quality Statement: All supporting quality data adhered to data quality objectives and test results meet the requirements of NELAC unless otherwise noted as flagged exceptions or in a case narrative attachment. Reports with full quality data deliverables are available on request.

These analytical results relate only to the sample tested.
All data is reported on an 'As Is' basis unless designated as 'Dry Wt'.
RL = Reporting Limits

Web Site: www.pcslab.net
eMail: chuck@pcslab.net
1532 Universal City Blvd, Suite 100
Universal City, TX 78148-3318
210-340-0343
FAX # 210-658-7903

This report cannot be reproduced or duplicated, except in full, without prior written consent from Pollution Control Services.

POLLUTION CONTROL SERVICES

Report of Sample Analysis

Client Information	Sample Information	Laboratory Information
John Gomez **Castroville, City of** **703 Paris St.** **Castroville, TX 78009**	**Project Name: Castroville** **Sample ID: Effluent 001** **Matrix: Non-Potable Water** **Date/Time Taken: 10/21/2024 0950**	**PCS Sample #: 779036 Page 1 of 1** **Date/Time Received: 10/21/2024 14:05** **Report Date: 10/28/2024** Approved by: Chuck Wallgren, President

Test Description	Result	Units	RL	Analysis Date/Time	Method	Analyst
BOD5	5	mg/L	3	10/22/2024 11:42	SM 5210 B	GQM
Total Suspended Solids	1	mg/L	1	10/22/2024 14:05	SM 2540 D	PML

Quality Assurance Summary

Test Description	Precision	Limit	LCL	MS	MSD	UCL	LCS	LCS Limit	Blank
BOD5	<1	23	N/A	N/A	N/A	N/A	187	167 - 228	
Total Suspended Solids	3	10	N/A			N/A			

Quality Statement: All supporting quality data adhered to data quality objectives and test results meet the requirements of NELAC unless otherwise noted as flagged exceptions or in a case narrative attachment. Reports with full quality data deliverables are available on request.

These analytical results relate only to the sample tested.
All data is reported on an 'As Is' basis unless designated as 'Dry Wt'.
RL = Reporting Limits
QC Data Reported in %, Except BOD in mg/L

www.pcslab.net
chuck@pcslab.net
1532 Universal City Blvd
Universal City, TX 78148-3318
Main: 210-340-0343
Fax: 210-658-7903
This report cannot be reproduced or duplicated, except in full, without prior written consent from Pollution Control Services.

POLLUTION CONTROL SERVICES

Chain of Custody Number: 779032

MULTIPLE SAMPLE ANALYSIS REQUEST AND CHAIN OF CUSTODY FORM

Stamp 1st sample and COC as same number

CUSTOMER INFORMATION

Name: Castroville, City of

REPORT INFORMATION

Attention: Daniel Paxson | Phone: (830) 931-4070 | Fax: (000) 000-0000

SAMPLE INFORMATION

Project Information:

Report "Soils" ☐ As Is ☐ Dry Wt.

Collected by: Max Lunstrum

Client / Field Sample ID	Collected Date	Collected Time	Field Chlorine Residual mg/L	Composite or Grab	Matrix	Container Type	Container Number	Preservative	CBOD, TSS	TPO4, NH3	E. coli	BOD/TSS					Instructions/Comments: PCS Sample Number
Effluent	Start: 10-21-24 End:	Start: 9am End: 1000am		☒C ☐G	☐DW ☒NPW ☐WW ☐Soil ☐Sludge ☐LW ☐Other	☑P ☐G ☐O	2	☑H_2SO_4 ☐HNO_3 ☐H_3PO_4 ☐NaOH ☑ICE ☐	☆	☆							779032 ☐S ☐B ☐N ☐EM Other:
Influent	Start: 10-21-24 End:	Start: 1045am End:		☐C ☒G	☐DW ☒NPW ☐WW ☐Soil ☐Sludge ☐LW ☐Other	☑P ☐G ☐O	2	☑H_2SO_4 ☐HNO_3 ☐H_3PO_4 ☐NaOH ☑ICE ☐	☆	☆							779033 ☐S ☐B ☐N ☐EM Other:
East & West Pond	Start: 10-21-24 End:	Start: 1010 AM End:		☐C ☒G	☐DW ☒NPW ☐WW ☐Soil ☐Sludge ☐LW ☐Other	☑P ☐G ☐O	2	☐H_2SO_4 ☐HNO_3 ☐H_3PO_4 ☐NaOH ☑ICE ☐	☆		☆						779034 ☐S ☐B ☐N ☐EM Other:
Effluent E. coli	Start: 10-21-24 End:	Start: 950am End:		☐C ☒G	☐DW ☒NPW ☐WW ☐Soil ☐Sludge ☐LW ☐Other	☐P ☐G ☐O	1	☐H_2SO_4 ☐HNO_3 ☐H_3PO_4 ☐NaOH ☑ICE ☐			☆						779035 ☐S ☐B ☐N ☐EM Other:
Effluent 001	Start: 10-21-24 End:	Start: 950am End:		☐C ☒G	☐DW ☒NPW ☒WW ☐Soil ☐Sludge ☐LW ☐Other	☑P ☐G ☐O	1	☐H_2SO_4 ☐HNO_3 ☐H_3PO_4 ☐NaOH ☑ICE ☐				☆					779036 ☐S ☐B ☐N ☐EM Other:
	Start: End:	Start: End:		☐C ☒G	☐DW ☒NPW ☐WW ☐Soil ☐Sludge ☐LW ☐Other	☐P ☐G ☐O		☐H_2SO_4 ☐HNO_3 ☐H_3PO_4 ☐NaOH ☐ICE ☐									☐S ☐B ☐N ☐EM Other:
	Start: End:	Start: End:		☐C ☐G	☐DW ☐NPW ☐WW ☐Soil ☐Sludge ☐LW ☐Other	☐P ☐G ☐O		☐H_2SO_4 ☐HNO_3 ☐H_3PO_4 ☐NaOH ☐ICE ☐									☐S ☐B ☐N ☐EM Other:
	Start: End:	Start: End:		☐C ☐G	☐DW ☐NPW ☐WW ☐Soil ☐Sludge ☐LW ☐Other	☐P ☐G ☐O		☐H_2SO_4 ☐HNO_3 ☐H_3PO_4 ☐NaOH ☐ICE ☐									☐S ☐B ☐N ☐EM Other:

Required Turnaround ☐ Routine (6-10 days) | *EXPEDITE:* (See Surcharge Schedule) ☐ < 8 Hrs. ☐ < 16 Hrs. ☐ < 24 Hrs. ☐ 5 days ☐ Other: _____ *Rush Charges Authorized by:*

Sample Archive/Disposal: ☐ Laboratory Standard ☐ Hold for client pick up | Container Type: P = Plastic, G = Glass, O = Other | Carrier ID:

Relinquished By:	Date: 10-21-24	Time: 1:15 PM	Received By:		Date: 10-21-24	Time: 1:15 PM
Relinquished By:	Date: 10-21-24	Time: 2:05 PM	Received By:		Date: 10-21-24	Time: 1405

1532 Universal City Blvd., Ste. 160, Universal City, Texas 78148
P (210) 340-0343 or (800) 880-4616 – F (210) 658-7903

Login at [illegible]

Pollution Control Services

Sample Log-In Checklist

779032

PCS Sample No(s) 779032 779036 **COC No.** _____

Client/Company Name: Cash. **Checklist Completed by:** SAA

Sample Delivery to Lab Via:
Client Drop Off ✓ Commercial Carrier: Bus ___ UPS ___ Lone Star ___ FedEx ___ USPS ___
PCS Field Services: Collection/Pick Up ___ Other: _____

Sample Kit/Coolers
Sample Kit/Cooler? Yes ✓ No ___ Sample Kit/Cooler: Intact? Yes ✓ No ___
Custody Seals on Sample Kit/Cooler: Not Present ✓ If Present, Intact ___ Broken ___
Sample Containers Intact; Unbroken and Not Leaking? Yes ✓ No ___
Custody Seals on Sample Bottles: Not Present ✓ If Present, Intact ___ Broken ___
COC Present with Shipment or Delivery or Completed at Drop Off? Yes ✓ No ___
Has COC sample date/time and other pertinent information been provided by client/sampler? Yes: ✓ No: ___
Has COC been properly Signed when Received/Relinquished? Yes ✓ No ___
Does COC agree with Sample Bottle Information, Bottle Types, Preservation, etc.? Yes ✓ No ___
All Samples Received before Hold Time Expiration? Yes ✓ No ___
Sufficient Sample Volumes for Analysis Requested? Yes ✓ No ___
Zero Headspace in VOA Vial? Yes ___ No ___

Sample Preservation:
* ***Cooling:*** **Not Required** _____ or **Required** ✓
If cooling required, record temperature of submitted samples Observed/Corrected 7.4 / _____ °C
Is Ice Present in Sample Kit/Cooler? ✓ Yes ___ No Samples received same day as collected? ✓ Yes ___ No
Lab Thermometer Make and Serial Number: Vaughan 1807009583 Other: _____

Acid Preserved Sample - If present, is pH <2? **Yes** ✓ **No** ___ ** ✓ H_2SO_4 ___ HNO_3 ___ H_3PO_4
Base Preserved Sample - If present, is pH >12? Yes ___ No ___ ___ NaOH
Other Preservation: _____ If Present, Meets Requirements? Yes ___ No ___
Sample Preservations Checked by: SAA Date 10-21-24 Time 1407
pH paper used to check sample preservation (PCS log #): 24-131 (HEM pH checked at analysis).

Samples Preserved/Adjusted by Lab:	Lab #	Parameters Preserved	Preservative Used	Log #

Adjusted by Tech/Analyst: _____ Date : _____ Time: _____

Client Notification/ Documentation for "No" Responses Above/ Discrepancies/ Revision Comments
Person Notified: _____ Contacted by: _____
Notified Date: _____ Time: _____
Method of Contact: At Drop Off: ___ Phone ___ Left Voice Mail ___ E-Mail ___ Fax ___
Unable to Contact ___ Authorized Laboratory to Proceed : _____ (Lab Director)
Regarding / Comments: _____
_____
_____
Actions taken to correct problems/discrepancies: _____
_____
_____
Receiving qualifier needed (*requires client notification above*) Temp. ___ Holding Time ___ Initails: _____
Receiving qualifier entered into LIMS at login Initial/Date: _____
Revision Comments: _____
_____

WWTP Daily Report Manganese Interference

MONTH / YEAR Oct 2024

DATE	TIME	PLACE	CL2/RES (1.0-4.0)	MANGANESE INTER.	PARK CL2	OPER/INT
1	7:30 Am	Contact Chamber	1.78	0.07		Q
2	7:40 Am	" "	1.67	0.03		Q
3	7:55 Am	" "	1.25	0.02		Q
4	8:04 Am	"	1.58	0.02		SS/DP
5	8:30 am	" "	2.19	0.01		SS/DP
6	8:35 am	" "	2.57	0.03		SS/DP
7	8:20 Am	" "	1.78	0.02		Q
8	7:45 Am	" "	1.68	0.02		Q
9	7:30 Am	" "	2.04	0.03		Q
10	7:55 Am	" "	2.37	0.03		Q
11	7:20 Am	" "	2.58	0.02		Q
12	11:15 Am	" "	2.47	0.03		Q
13	12:10 Pm	" "	1.67	0.03		Q
14	8:30 Am	" "	3.38	0.02		Q
15	8:15 Am	" "	2.97	0.03		Q
16	7:45 Am	" "	3.09	0.01		Q
17	7:20 Am	" "	3.46	0.04		Q
18	8:42 AM	" "	3.48	0.02		EG/DP
19	9:24 AM	" "	3.97	0.03		EG/DP
20	10:04 AM	" "	3.88	0.02		EG/DP
21	8:15 Am	" "	2.97	0.03		Q
22	7:15 Am	" "	3.08	0.02		Q
23	7:30 Am	" "	2.37	0.03		Q
24						
25						
26						
27						
28						
29						
30						
31						

WASTEWATER D.O. PH SAMPLES

MONTH / YEAR Oct 2024

EFFLUENT							AERATOR						
TIME	D.O. (min 1.0)	TEMP	TIME	PH (6.0-9.0)	TEMP	DAY	TIME	D.O.	TEMP	TIME	PH	TEMP	OPERATOR INITIAL
						1							
						2							
804Am	6.74	22.8	806Am	7.53	22.9	3	811Am	2.4	25.7	813Am	7.5	26.5	
						4							
						5							
						6							
						7							
						8							
						9							
						10							
739Am	6.54	22.6	740Am	7.49	22.8	11	741Am	1.8	25.9	743Am	7.47	26.1	
						12							
						13							
						14							
						15							
						16							
						17							
734Am	6.36	22.0	736Am	7.49	22.2	18	731Am	1.25	26.1	732Am	7.57	26.8	
						19							
						20							
						21							
						22							
736Am	7.73	24.1	730Am	7.46	24.1	23							
						24							
						25							
						26							
						27							
						28							
						29							
						30							
						31							

6911 Blanco Road
San Antonio, TX 78216
P (210) 641-2112
Terracon.com

Preliminary WOTUS Delineation Report

Castroville WWTP Dam Improvements

Castroville, County, Texas

July 29, 2022

Terracon Project No. 90217104



Prepared for:
K Friese & Associates, Inc.
Castroville, Texas

Prepared by:
Terracon Consultants, Inc.
San Antonio, Texas

July 29, 2022

Michael Persyn
K Friese & Associates, Inc.
10001 Reunion Place Suite 404
San Antonio TX, 78216

Re: **Preliminary Waters of the U.S. Delineation**
Castroville WWTP Dam Improvements
1209 Fiorella Street
Castroville, Medina County, Texas
Terracon Project No. 90217104

Dear Mr. Persyn:

Terracon Consultants, Inc. (Terracon) is pleased to submit the enclosed Preliminary Waters of the United States (WOTUS) Delineation report for the above-referenced site. February 15, 2022 and March 1, 2022 Terracon sent a qualified wetland scientist to perform a delineation of the site to determine the presence/absence of jurisdictional WOTUS.

Based on site conditions at the time of reconnaissance, **it is Terracon's opinion that there is a jurisdictional feature present within the site**; however, the U.S. Army Corps of Engineers (USACE) is the official agency to make the final determination of the location, type, and extent of jurisdictional WOTUS. Should the proposed project change, please contact Terracon to discuss if formal coordination would be required. Note that the N*avigable Waters Protection Rule to define "Waters if the United States"* took effect on June 22, 2020.

We appreciate the opportunity to be of service to you on this project. For more detailed information on all of Terracon's services please visit our website at www.terracon.com. If there are any questions regarding this report or if we may be of further assistance, please do not hesitate to contact Aimee Steinbrecher at (210) 714 - 2125 or by e-mail at aimee.steinbrecher@terracon.com.

Sincerely,
Terracon Consultants, Inc.

Aimee Steinbrecher
Field Scientist

Jennifer Peters
Group Manager

Attachments

TABLE OF CONTENTS

Page No.

EXECUTIVE SUMMARY i
Opinion i
1.0 INTRODUCTION 1
2.0 PRELIMINARY DATA GATHERING AND ANALYSIS 2
2.1 Topographic Map 2
2.2 National Wetlands Inventory Map 2
2.3 Soil Survey 3
2.4 FEMA Flood Insurance Rate Map 4
2.5 Aerial Photographs 4
2.6 Wetland Hydrologic Index 4
3.0 FIELD METHODS 5
3.1 Wetland Field Methods 6
3.1.1 Vegetative Community 6
3.2 Hydric Soils 7
3.2.1 Wetland Hydrology 7
3.3 Non-Wetland WOTUS Field Methods 7
4.0 FIELD OBSERVATIONS 8
4.1 Vegetative Community 8
4.2 Stream and Open Features 8
4.3 Wetlands 9
5.0 PRINCIPAL FINDINGS OF THE INVESTIGATION 10

APPENDICES

APPENDIX A EXHIBITS

Exhibit 1: Vicinity Map
Exhibit 2: Site Map
Exhibit 3: USGS Topographic Map
Exhibit 4: National Wetland Inventory Map
Exhibit 5: Soils Map
Exhibit 6: Flood Insurance Rate Map
Exhibit 7: Potential WOTUS Map

APPENDIX B PHOTO LOG

APPENDIX C DATA FORMS

APPENDIX D COMMON ACRONYMS

EXECUTIVE SUMMARY

Terracon Consultants, Inc. (Terracon) conducted a delineation of waters of the United States (WOTUS) for an approximately 14-acre property in Castroville, Medina County, Texas (Site). The location of the Site can be seen on *Exhibit 1* in *Appendix A*.

Terracon's qualified wetland scientist, Ms. Aimee Steinbrecher, assisted by Ms. Alyssa Arguijo and Mr. Chris Amy, conducted a site visit on February 15, 2022 and March 1, 2022 in order to assess the presence of potentially jurisdictional WOTUS within the site.

The site was reviewed for potential WOTUS using the routine determination methodology published in the 1987 Corps of Engineers Wetland Delineation Manual (Technical Report Y-87-1, online edition) as amended by the Great Plains Regional Supplement manual. The site was also reviewed for potential WOTUS, including wetlands, following the current guidance from the U.S. Environmental Protection Agency and the U.S. Army Corps of Engineers (USACE) as presented in the USACE Jurisdictional Determination Form Instructional Guidebook. Please note the Repanos Guidance, pre-2015, to define "*Waters of the United States"* took effect in August 2021. The delineation of the site was conducted under the guidance of the new rule.

Opinion

Terracon's opinion is that there is a jurisdictional feature within the Site. According to the guidelines, non-wetland jurisdictional WOTUS are identified according to their flow regime as Traditional Navigable Waters (TNW), Relatively Permanent Waters (RPW), and Non-Relatively Permanent Waters (NRPW). The Un-named Ephemeral Tributary located to the south of Pond 2 flowing southeast to the NWI PUSAh pond maintains a consistent flow of water. This outflow of water is not related to the Waste Water Treatment Plant (WWTP) but potentially receives runoff, leaks, and/or springs from the Medina Irrigation Canal located to the west of the site. The Intermittent Tributary only has flowing water part of the year. Therefore, it is Terracon's opinion that the Un-named Ephemeral Tributary would be considered a WOTUS and would be subject to USACE jurisdiction under Section 404, while the Un-named Intermittent Tributary, and Ponds 1 and 2 would not be considered WOTUS and not subject to USACE jurisdiction under Section 404.

Terracon's opinion of jurisdictional and non-jurisdictional waters is summarized as follows:

- Jurisdictional: Un-named Ephemeral Tributary with associated PUSAh Pond
- Non-Jurisdictional: Un-named Intermittent Tributary
- Non-Jurisdictional: Pond 1
- Non-Jurisdictional: Pond 2

This opinion is part of an executive summary and incomplete without the remainder of the Preliminary WOTUS Delineation report.

1.0 INTRODUCTION

Terracon Consultants, Inc. (Terracon) conducted a delineation of waters of the United States (WOTUS) for an approximately 2,000 linear foot channel apart of a 126- acre property in Castroville, Medina County, Texas (Site). The project is anticipated to involve armoring the drainage path from the outflow of the WWTP to the Medina River. The Site can be seen on Exhibits *1 and 2* in *Appendix A*. Terracon conducted the preliminary WOTUS delineation in order to assess the jurisdiction of WOTUS on the site. The following Exhibits are included in *Appendix A*:

- Vicinity Map (Exhibit 1)
- Site Map (Exhibit 2)
- USGS Topographic Map (Exhibit 3)
- National Wetland Inventory Map (Exhibit 4)
- Soils Map (Exhibit 5)
- Flood Insurance Rate Map (Exhibit 6)
- Potential WOTUS Map (Exhibit 7)

Terracon's qualified wetland scientist, Ms. Aimee Steinbrecher and Ms. Alyssa Arguijo conducted a site visit on February 15, 2022 and March 1, 2022 in order to assess the presence of potentially jurisdictional WOTUS within the site.

The site was reviewed for potential WOTUS using the routine determination methodology published in the 1987 Corps of Engineers Wetland Delineation Manual (Technical Report Y-87-1, online edition) as amended by the Great Plains Regional Supplement manual. The site was also reviewed for potential WOTUS, including wetlands, following the current guidance form the U.S. Environmental Protection Agency (EPA) and the U.S. Army Corps of Engineers (USACE) as presented in the USACE Jurisdictional Determination Form Instructional Guidebook. Note that the *Navigable Waters Protection Rule to define "Waters if the United States*" took effect on June 22, 2020. The delineation of the site was conducted under the guidance of the new rule.

Geographically referenced features were collected using a Trimble GeoXT Global Positioning System (GPS) receiver, capable of sub-meter accuracy, to record the locations of data collected and the boundaries of potentially jurisdictional WOTUS on the site, as applicable. If the proposed site layout would impact all or a portion of jurisdictional WOTUS on the site, then the proposed project may require coordination for a Section 404 permit from the USACE.

The observations and opinions contained in this report are based on guidance, regulations, and data available after June 22, 2020 as well as site conditions encountered at the time of the site reconnaissance. Guidance, regulations, data furnished by others, and site conditions are

dynamic and subject to changes beyond the control of Terracon. A future evaluation may yield differing results.

This Preliminary WOTUS Delineation report is prepared for the exclusive use and reliance of K Friese & Associates, Inc. Use or reliance by any other party except a governmental entity having jurisdiction over the site is prohibited without the written authorization of K Friese & Associates, Inc. and Terracon.

Reliance on the Preliminary WOTUS Delineation Report by the client and all authorized parties will be subject to the terms, conditions and limitations stated in the proposal, Preliminary WOTUS Delineation report, and the Agreement for Services.

2.0 PRELIMINARY DATA GATHERING AND ANALYSIS

Prior to performing the site visit, several map and aerial photograph resources were reviewed to assist with identifying suspect WOTUS, including wetlands, at the site. Each source of data is described below.

2.1 Topographic Map

The United States Department of the Interior Geologic Survey (USGS) 7.5-Minute Topographic Map of the site was reviewed to identify drainages or suspect WOTUS within the site. A portion of the Medina County quadrangle can be seen on *Exhibit 3* in *Appendix A.* The site slopes to the east, from the ridge to the west of the site, ranging from 884 to 750 MSL. Atop the ridge, there is the Medina Irrigation Canal, this can be seen as a blue line running north to south along the western side of the map. Water from this channel does flow east, downslope to the channel on site. The most prominent inlet of this, is located just south of Pond 2. There is the presence of a blue feature along the western boundary of the middle of the project site that may indicate a potential WOTUS. Additionally, the Medina River flows along the east of the project site and is where the drainage of the site is permitted to discharge.

2.2 National Wetlands Inventory Map

The National Wetlands Inventory (NWI) Map of the site was reviewed to identify suspect wetland areas. The map for the site was published by the U.S. Department of the Interior's Fish and Wildlife Service (USFWS) and depicts suspect wetland areas based on stereoscopic analysis of high altitude aerial photographs. The NWI map does indicate the presence of six wetland features: Two freshwater ponds classified as Palustrine, Unconsolidated Bottom, Permanently Flooded, Diked/Impounded (PUBHh), a riverine habitat classified as Riverine, Lower Perennial, Unconsolidated Bottom, Permanently Flooded, excavated (R2UBHx), two Riverine habitats

classified as Riverine, Intermittent, Streambed, Seasonally Flooded (R4SBC), Riverine habitat classified as Riverine, Unknown Perennial, Unconsolidated Bottom, Permanently Flooded (R5UBH).

2.3 Soil Survey

According to the Natural Resources Conservation Service (NRCS) online Soil Data Mart and the 1980 Soil Survey of Medina County, Texas, the project lies within two general soil types and one Land Resource Area and Region as listed in *Table 1 and 2*. *Table 3* lists the mapping units found on the site. Based on finding from the soil sampling conducted during the field survey, it appears this classification accurately describes most of the existing conditions within the Site. The soils map exhibits the general soil types and locations and is found on *Exhibit 5* in *Appendix A*.

Table 1. Soil Type

General Soil Type	Texture and Drainage	General Location	Percent of County
Atco Series	Deep loam soils with slight slope	Erosion remnants on stream terraces	1.9%
Kincheloe Series	Moderately deep clay soils with steep slopes	Valley sides	0.6%
Montell Series	Moderately deep clay soils with a slight slope	Plains	1.0%
Orif Series	Deep sandy loam soils with little to no slope	Draws, flood plains on river valleys	0.9%

Table 2. Major Land Resource Area Land Resource Region

Major Land Resource 86A	Land Resource Region I
Northern Blackland Prairie	Southwest Plateaus and Plains Range and Cotton Region

Table 3. Mapping Units

Mapping unit	Permeability	Drainage Class	Listed as Hydric by NRCS
Atco loam, 1 to 3 percent slopes (AtB)	0.57 to 1.95 in/hr	Well Drained	No
Kincheloe Soils, 10 to 30 percent slopes (KcF)	0.00 to 0.06 in/hr	Well Drained	No
Montell Clay, 1 to 3 percent slopes (McB)	0.00 to 0.06 in/hr	Moderately Well Drained	No

Orif soils, 0 to 3 percent slopes, frequently flooded (Or)	1.98 to 5.95 in/hr	Well drained	No
Water (W)	-	-	-

2.4 FEMA Flood Insurance Rate Map

Terracon downloaded and reviewed Federal Emergency Management Agency (FEMA) Flood Insurance Rate Map (FIRM). According to the FIRM map, the site does fall within the 100-year floodplain (panel number 48325C0510D). The majority of the Site is located in Zone X, which is defined as the area outside the 500-year floodplain. The remainder of the Site is located within Zone AE, which is defined as areas subject to inundation by the 1-percent-annual-chance flood event. The FEMA Map is included as *Exhibit 6* in *Appendix A*.

2.5 Aerial Photographs

Terracon reviewed aerial photographs to review suspect WOTUS, including wetland areas that may be present on the site. Aerial photograph from 2015 (*Appendix A, Exhibit 2*) was analyzed to determine land use and historic changes to the site. The site is to the west of the Medina River, located at the Castroville Regional Park, and the City of Castroville WWTP. The site is topographically lower than the Medina Irrigation Canal that is located to the west of the site and can be seen with cut bank drainage from the irrigation canal to the drainage ditch on site and the Medina River.

2.6 Wetland Hydrologic Index

Terracon downloaded and reviewed local climate data to identify current site hydrologic conditions. Data from the NRCS Agriculture Applied Climate Information System (AgACIS) was downloaded and reviewed using the Direct Antecedent Rainfall Evaluation Method (DAREM). The DAREM provides an index of climatic conditions, as they pertain to wetland hydrology, for the time period in which field data was collected. Rainfall data was obtained from the San Antonio INTL AP, TX weather station; the nearest weather station to the study area with the range of historic data available necessary to calculate the DAREM. *Table 4* and *Table 5* summarize the DAREM index data for the study area at the time of the site investigation on February 15, 2022. According to the DAREM, the Site was experiencing drier than normal hydrologic conditions at the time of the site investigation, and field observations should be evaluated with those conditions in mind.

Table 4: Project Area Wetland Hydrologic Condition for February 2022

Prior Month	Month	WETS Percentile (in)		Measured Rainfall[1]	Condition[2]	Weight[3]	Score
		30th	70th				
1st	January	0.75	2.10	0.32	1	3	3
2nd	December	0.61	2.77	0.90	2	2	4
3rd	November	0.74	2.77	1.27	2	1	2
Total:							9

[1]Measured rainfall recorded at San Antonio INTL Ap, TX weather station
[2]Condition: 1 = monthly rainfall totals less than the 30-year Extreme Rainfall Distribution 30th percentile, 2 = monthly rainfall totals between the 30th and 70th percentile for the 30-year Extreme Rainfall Distribution, 3 = monthly rainfalls total greater than the 70th percentile for the 30-year Extreme Rainfall Distribution
[3]Monthly weights equal 3 for the prior month, 2 for the second prior month, and 1 for the third prior month.

Table 5: DAREM Score Summary

DAREM Score (Observed Score)	6	7	8	**9**	10	11	12	13	14	15	16	17	18
DAREM Wetland Hydrologic Condition	**Drier than normal**				Normal					Wetter than normal			

3.0 FIELD METHODS

Terracon wetland scientist conducted a reconnaissance of the site to characterize existing conditions and identify the presence/absence of potentially jurisdictional WOTUS. Terracon used post-processed data from an EOS Arrow Global Positioning System (GPS) unit to geographically reference features such as wetland boundaries, OHWM, and the soil data points collected during the field survey. Geographic Information System (GIS) software was used to analyze collected features, calculate areas, and generate figures provided in *Appendix A.*

The site was reviewed for potentially jurisdictional WOTUS (including wetlands) using the routine determination methodology published in the 1987 Corps of Engineers Wetland Delineation Manual (Technical Report Y-87-1, online edition) as amended by the Great Plains Regional Supplement manual. The site was also reviewed for potential WOTUS, including wetlands, following the current guidance from the U.S. Environmental Protection Agency and the USACE as presented in the USACE Jurisdictional Determination Form Instructional Guidebook. Following the current guidance, if present, the boundaries of potential wetlands would have been placed at the point where one or more of the field indicators of wetlands were no longer observed. If present, the boundaries of streams and other open water bodies were determined using the OHWM as described in the current guidance.

3.1 Wetland Field Methods

Wetlands generally have three essential characteristics: hydrophytic (water-loving) vegetation, hydric soils, and wetland hydrology. During the site reconnaissance, Terracon personnel traversed the site and recorded observations with attention paid to suspect areas if they were identified on NWI maps and aerial photographs prior to the site visit. Vegetation and hydrology observations were performed randomly throughout the site where access was permitted, and soils were evaluated to determine if wetland characteristics were present. Data regarding the three essential characteristics was gathered within observed suspect wetland areas to further delineate boundaries.

3.1.1 Vegetative Community

Suspect areas were visually observed to determine the species, when possible, and absolute percentage of ground cover for five strata of plant community types. Herbs were generally observed within a five-foot radius, shrubs/saplings within a fifteen-foot radius, and trees and vines within a thirty-foot radius of the observation location. Areas representing different vegetative communities were identified throughout the site and a plant community assessment was performed in each vegetative community.

For each species of vegetation observed, wetland indicator status was evaluated. The indicator status was determined using the USACE National Wetlands Plant List (NWPL) version 3.3. The NWPL can be found at http://wetland_plants.usace.army.mil. Indicator categories for vegetation are listed below:

- Obligate Wetland (OBL) – occur almost always (estimated probability greater than 99%) under natural conditions in wetlands.
- Facultative Wetland (FACW) – usually occur in wetlands (estimated probability 67-99%) but occasionally found in non-wetlands.
- Facultative (FAC) – equally likely to occur in wetlands or non-wetlands (estimated probability 34-66%).
- Obligate Upland (UPL) – rarely occur in wetlands, but occur almost always (estimated probability greater than 99%) under natural conditions in non-wetlands.

The percent cover of each stratum was determined, and dominance was evaluated. Dominant species were the most abundant species that accounted for more than 20 percent of the absolute percent coverage of the stratum. The number of dominant species with an indicator status of OBL, FACW, and/or FAC was compared to the total number of dominant species across all strata. Typically, when more than 50 percent of the dominant species had an indicator status of OBL, FACW, and/or FAC, hydrophytic vegetation was present.

If the percentage of dominant species with an indicator status of OBL, FACW, and/or FAC was less than 50 percent, prevalence index and morphological adaptations may have been evaluated to confirm if hydrophytic vegetation was present or absent.

3.2 Hydric Soils

After Terracon evaluated wetland vegetation, subsurface soil samples were collected. The samples were collected to a depth of approximately 16 inches below ground surface (or until rock was encountered) and were visually compared to Munsell Soil Color Charts which aided in the evaluation of hydric soil characteristics. The soil samples were further examined for hydric soil indicators including, but not limited to, histosol, thick dark surface, sandy gleyed matrix, sandy redox, loamy gleyed matrix, redox dark surface, and/or redox depressions. If these or other hydric soil indicators were observed in the subsurface soil sample, the observation location was considered to have hydric soil.

3.2.1 Wetland Hydrology

Visual indicators of wetland hydrology were evaluated. Examples of primary wetland hydrology indicators include, but are not limited to surface water, high water table, soil saturation, water marks, sediment deposits, drift deposits, iron deposits, inundation visible on aerial imagery, sparsely vegetated concave surface, and water-stained leaves. If at least one primary or two secondary indicators were observed, the observation location was considered to have wetland hydrology.

3.3 Non-Wetland WOTUS Field Methods

Terracon recorded observations of non-wetland site features that may be considered a jurisdictional WOTUS. If a potential jurisdictional WOTUS was identified, observations regarding its characteristics were recorded. Potentially jurisdictional non-wetland WOTUS were generally evaluated based on the following characteristics:

- Flow regime
  - Perennial – flowing water year-round during a typical year
  - Intermittent – flowing water during certain times of the year (groundwater supports streamflow)
  - Ephemeral – flowing water for a short duration during and after a precipitation event (groundwater is not a source for streamflow)
- OHWM – A physical indicator of surface water drainage characterized with a channel defined by a bed and bank with possible shelving, wracking, water staining, sediment sorting and/or scouring of surface.
- Bank shape
  - Undercut – banks overhang the channel

- Steep – bank slope greater than 30 degrees
- Gradual – bank slope equal to or less than 30 degrees

- Aquatic Habitat
  - Pool – deep portion of stream where water flows slower
  - Riffle – shallow portion of stream with swift flow over rock or coarse substrate producing turbulence on the surface
  - Run – section of stream with little or no turbulence on the surface

4.0 FIELD OBSERVATIONS

4.1 Vegetative Community

According to the Texas Parks and Wildlife (TPWD) Ecological Mapping Systems (EMS) of Texas, there are eleven vegetative types within the site. The mapped sites are South Texas: Shallow Dense Shrubland, South Texas: Disturbance Grassland, South Texas: Shallow Sparse Shrubland, South Texas: Clayey Mesquite Mixed Shrubland, Marsh, Edwards Plateau: Floodplain Line Oak Forest, Edwards Plateau: Floodplain Herbaceous Vegetation, Edwards Plateau: Riparian Hardwood Forest, Native Invasive: Deciduous Woodland, Urban Low Intensity, and Open Water. Terracon observed the eleven mapped types.

4.2 Stream and Open Features

During the site visit, Terracon personnel identified an Un-named Ephemeral Tributary, Un-named Intermittent Tributary, an NWI classified PUSAh wetland, and two effluent ponds. The Un-named Ephemeral and Un-named Intermittent tributaries are not identified on the USGS topographic map as a blueline. The Un-named Ephemeral tributary receives water from off-site toward the Medina Irrigation Canal, from potentially a seep or spring, and the Un-named Intermittent Tributary receives water from the Ephemeral as well as runoff from the Castroville Regional Park. *Table 6* summarizes the Un-named Ephemeral Tributary, Un-named Intermittent Tributary, wetland, and ponds observed on the can be found on *Exhibit 7* in *Appendix A*.

Table 6: Summary of Open Features within Site

Feature Name	Approx. Length Within Site	Approx. Acreage Within Site	Approx. OHWM Depth	Approx. OHWM Width	Feature Flow Classification
	1,277.73 LF	0.23-acre	Varies	~1’ to 40’	Jurisdictional Intermittent tributary
Un-named Ephemeral Tributary	670.16 LF	0.37-acre	Varies	~1’ to 2’	Non-jurisdictional ephemeral tributary
Effluent Pond 1	NA	1.3-acres	Varies	Varies	Non-jurisdictional Effluent Pond

Effluent Pond 2	NA	3.32-acres	Varies	Varies	Non-jurisdictional Effluent Pond

4.3 Wetlands

During the site visit, Terracon personnel traversed the site for the presence of wetlands. One data points (DP01) was established to gather data to confirm if wetlands were present in the mapped NWI features and drainage ditch. DP01 was taken within the Un-named Intermittent Tributary located, just south of the mapped NWI PUSAh wetland. DP01 exhibited all of the wetland characteristics and has been determined to be jurisdictional. The data point locations can be seen on *Exhibit 7*, in *Appendix A* and wetland data forms can be seen in *Appendix C*.

Table 7: Sample Point Summary

Sample Point Number	Community	Dominant Vegetation	Soil Characteristics	Hydrologic Characteristics	Classification
DP 1	Tributary	*N/A*	Gley with black organic matter and redox concentrations Loamy Gleyed Matrix (F2), Depleted Matrix (F3), Redox Depressions (F8)	Algal Mat/Crust (B4), Water-Stained Leaves (B9), Sparsely Vegetated Concave Surface (B8), Drainage Patterns (B10), Geomorphic Position (D2)	Ephemeral Tributary
DP 2	Tributary	*Salix nigra* (FACW), *Typha latifolia* (OBL), *Hydrocotyle umbellata* (OBL),	Saturated Clay loam, dark gleyish brown with black and redox concentrations in the matrix, Loamy Gleyed Matrix (F2)	Surface Water (A1), High Water Table (A2), Saturation (A3), Water Marks (A4), Drift Deposits (B3), Inundation Visible on Aerial Imagery (B7), Water-Stained Leaves (B9), Aquatic Invertebrates (B13), Drainage Patterns (B10), Saturation visible on Aerial Imagery (C9), Geomorphic Position (D2)	Intermittent Tributary
DP 3	Mixed Forest	*Salix nigra* (FACW), *Kalmia latifolia* (FACU), *Parietaria pensylvanica* (FAC), Chaerophyllum *tainturieri* (FAC)	Yellowish brown matrix, with dark greyish brown streaks, very dry loamy clay	None	Upland

5.0 PRINCIPAL FINDINGS OF THE INVESTIGATION

According to the Federal Register (*33CFR §328.3(a)*), WOTUS may include rivers and streams, including impoundments and other waters. Since the 2006 Supreme Court decision (*Repanos* v. U.S., 547 S. Ct. 715), the USACE and EPA have continued to assert jurisdiction over traditionally navigable waters; non-navigable tributaries of traditionally navigable waters where the tributaries are relatively permanent waters (i.e. streams with perennial or intermittent flow); and wetlands directly abutting such tributaries.

Current USACE guidelines require a significant nexus evaluation for (1) waterbodies and tributaries that are not relatively permanent waters (i.e. ephemeral), including adjacent wetlands if present; and, (2) wetlands adjacent to, but not directly abutting, a traditionally navigable or relatively permanent water. A significant nexus exists if the aquatic features in question have more than a speculative or insubstantial effect on the chemical, physical, or biological integrity of a traditionally navigable water. Establishment of a significant nexus is necessary to establish jurisdiction as a WOTUS.

Terracon did observe features within/adjacent the Site as described above. All features as described below, can be seen on *Exhibit 7, Appendix A.*

The site contains two Effluent Ponds (1 and 2) which are a functional part of the Castroville WWTP system. These ponds receive treated wastewater that cannot be immediately applied to the land application areas. For the effluent, within the ponds, to be discharged the effluent must receive additional treatment prior to. Both ponds were observed to be close to their bank limits, without room to expand the pond sizes due to the natural land shape and trails surrounding each pond. Due to the nature of the ponds, only receiving effluent and rain water, the ponds would not be considered WOTUS and would not be subject to the USACE jurisdiction under Section 404.

An un-named ephemeral stream is an approximal 670 linear foot feature that partially flows through the project area. The tributary is a part of a natural drainage stemming from the Medina Irrigation Canal, that can be found to the west of the project area, at the highest elevation. This ephemeral stream begins outside of the project area and ends within. This stream provides the NWI mapped pond (PUSAh) with a consistent and steady flow of water. The location of the PUSAh pond, is also where the Castroville WWTP plans to discharges effluent water in the future, through an existing wallhead. The wallhead leads back to the WWTP chlorine contact basin, but is currently valved off and has never been used to discharge. The boundary of the ephemeral stream ends at the southern boundary of the mapped pond. During the site visit, the PUSAh pond was determined to be contained within the OHWM boundary of the ephemeral stream, as determined by the instream vegetation and the OHWM. The PUSAh pond was observed during the site visit with approximately 2.5 feet of standing water with *Typha latifolia, Hydrocotyle umbellate,* and

Salix nigra as the dominant vegetation. Due to the dual input of water to the same low-lying area within the project site, it is Terracon's opinion that the Un-named Ephemeral Tributary and the encompassed PUSAh pond would be considered a WOTUS and would be subject to USACE jurisdiction under Section 404.

Continuing south along the project area, the Un-named Ephemeral Tributary has a change in flow and was determined to be an Intermittent Tributary. The Un-named Intermittent Tributary is an

APPENDIX A
EXHIBITS



Legend

Site Boundary

N

2,000 1,000 0 2,000

Feet

Project Mngr:	JTP
Drawn By:	AES
Checked By:	JTP
Approved By:	JTP

Project No.	90217104
Scale:	1 in = 2,000 ft
TBPE Firm No.	F-3272
Date:	February 2022

Terracon
Explore with us
6911 Blanco Road San Antonio, TX 78216
PH (210) 641-2112 Fax (210) 641-2124

Vicinity Map

Castroville WWTP Dam Improvements
Project No. 90217104
Castroville, Medina County, Texas

Exhibit

1



Legend

Site Boundary

N

400 200 0 400

Feet

Project Mngr:	JTP
Drawn By:	AES
Checked By:	JTP
Approved By:	JTP

Project No.	90217104
Scale:	1 in = 400 ft
TBPE Firm No.	F-3272
Date:	February 2022

Terracon
Explore with us
6911 Blanco Road San Antonio, TX 78216
PH (210) 641-2112 Fax (210) 641-2124

Site Map

Castroville WWTP Dam Improvements
Project No. 90217104
Castroville, Medina County, Texas

Exhibit

2

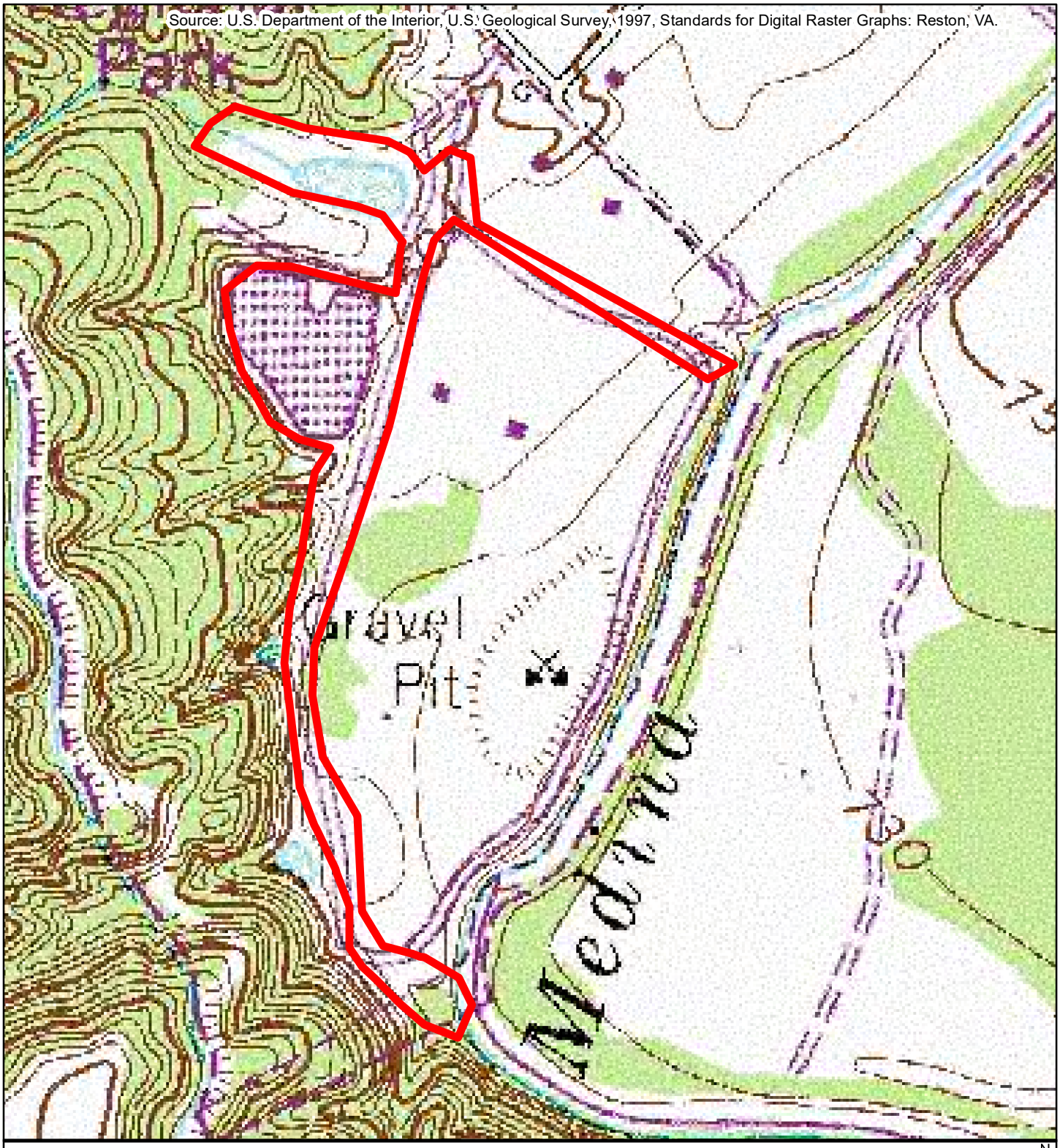

Project Mngr:	JTP
Drawn By:	AES
Checked By:	JTP
Approved By:	JTP

Project No.	90217104
Scale:	1 in = 400 ft
TBPE Firm No.	F-3272
Date:	February 2022

Terracon
Explore with us
6911 Blanco Road San Antonio, TX 78216
PH (210) 641-2112 Fax (210) 641-2124

Topographic Map

Castroville WWTP Dam Improvements
Project No. 90217104
Castroville, Medina County, Texas

Exhibit

3

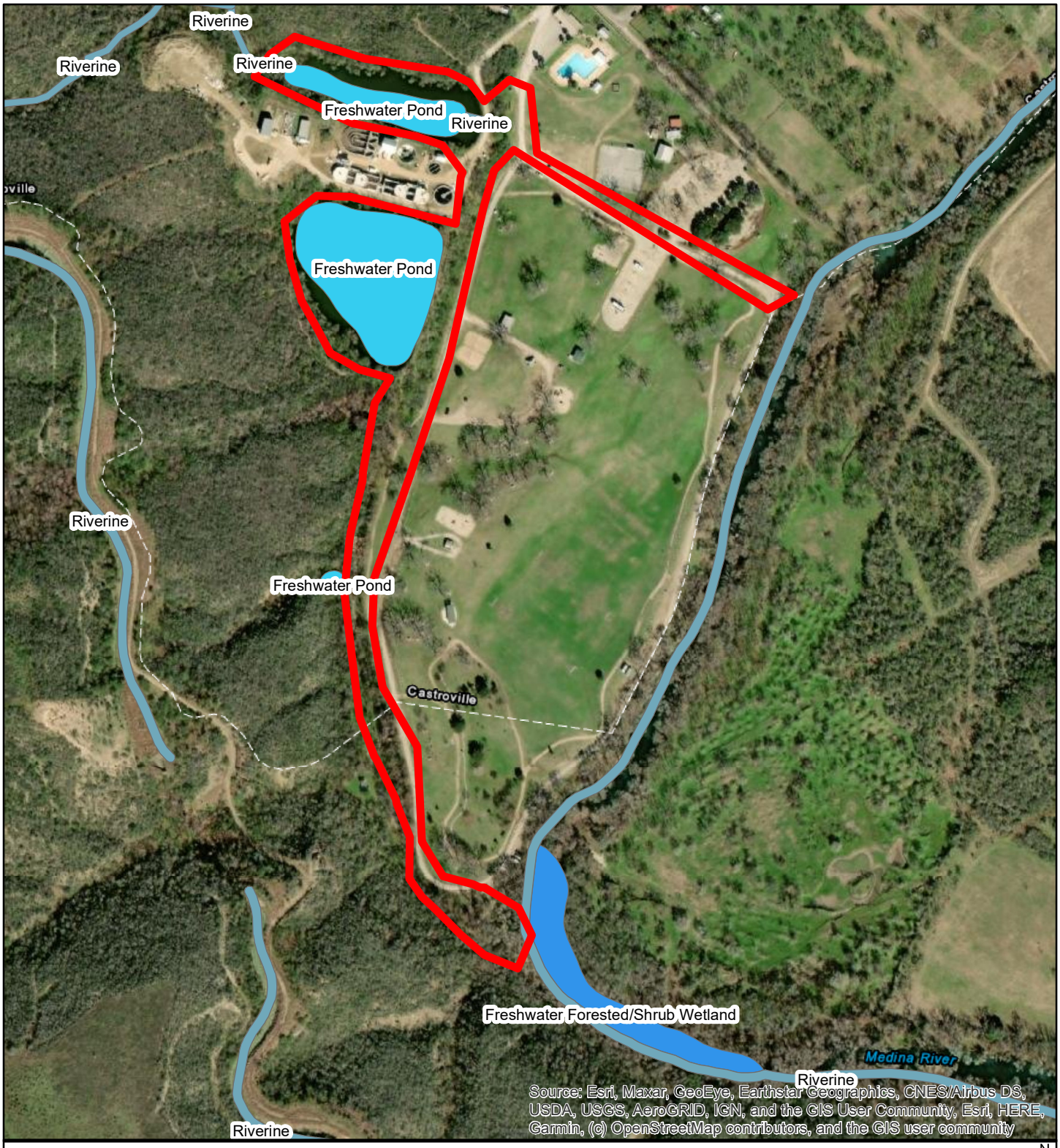

Legend

- Site Boundary
- Freshwater Emergent Wetland
- Freshwater Forested/Shrub Wetland
- Freshwater Pond
- Lake
- Riverine

N

400 200 0 400

Feet

Project Mngr:	JTP
Drawn By:	AES
Checked By:	JTP
Approved By:	JTP

Project No.	90217104
Scale:	1 in = 400 ft
TBPE Firm No.	F-3272
Date:	February 2022

Terracon
Explore with us
6911 Blanco Road San Antonio, TX 78216
PH (210) 641-2112 Fax (210) 641-2124

NWI Map

Castroville WWTP Dam Improvements
Project No. 90217104
Castroville, Medina County, Texas

Exhibit

4



Legend

- Site Boundary
- Soils

N

400 200 0 400

Feet

Project Mngr:	JTP
Drawn By:	AES
Checked By:	JTP
Approved By:	JTP

Project No.	90217104
Scale:	1 in = 400 ft
TBPE Firm No.	F-3272
Date:	February 2022

Terracon
Explore with us
6911 Blanco Road San Antonio, TX 78216
PH (210) 641-2112 Fax (210) 641-2124

Soils Map

Castroville WWTP Dam Improvements
Project No. 90217104
Castroville, Medina County, Texas

Exhibit

5

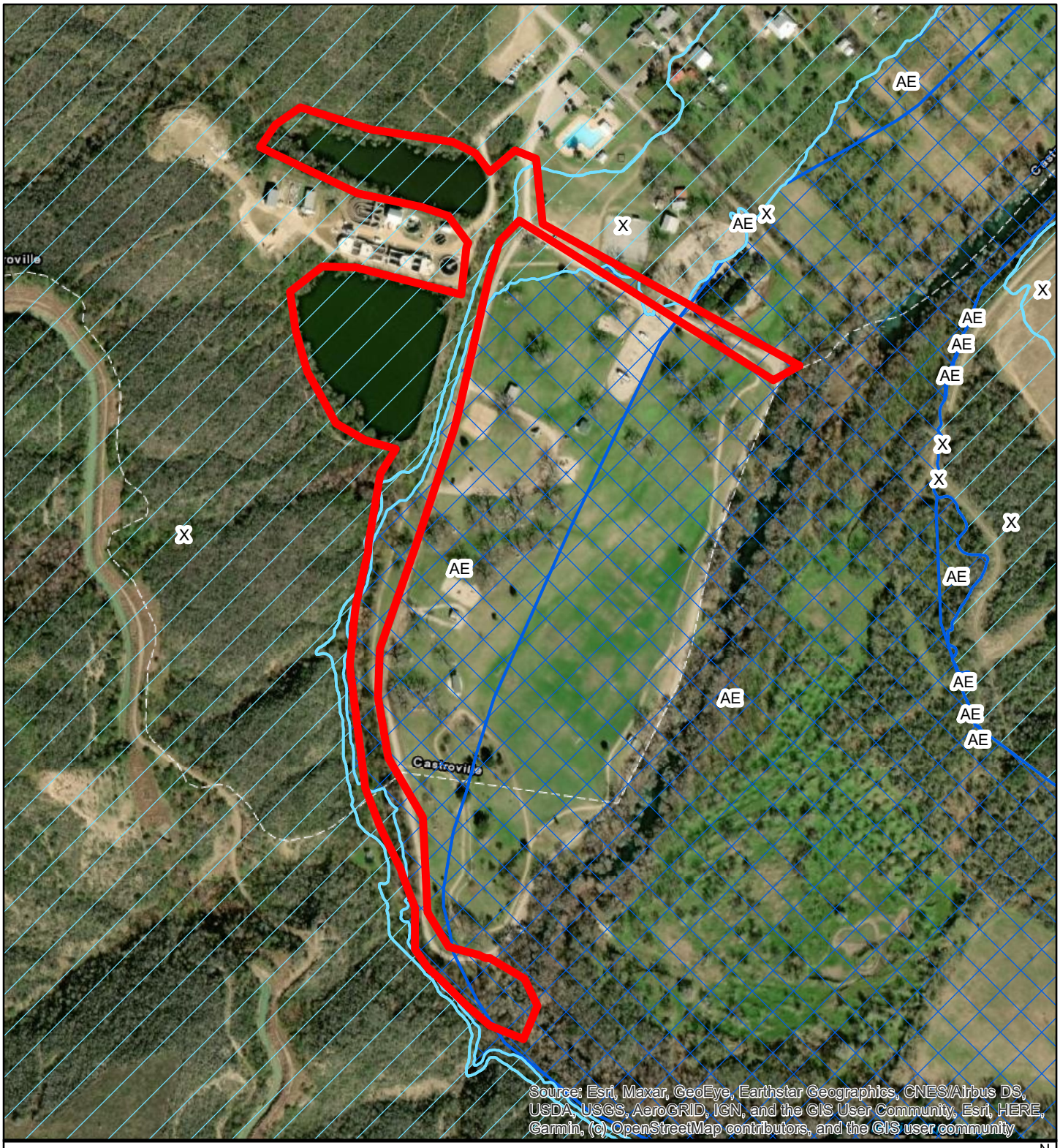

Legend

- Site Boundary
- AE
- X

N

400 200 0 400

Feet

Project Mngr:	JTP
Drawn By:	AES
Checked By:	JTP
Approved By:	JTP

Project No.	90217104
Scale:	1 in = 400 ft
TBPE Firm No.	F-3272
Date:	February 2022

Terracon
Explore with us
6911 Blanco Road San Antonio, TX 78216
PH (210) 641-2112 Fax (210) 641-2124

FEMA Map

Castroville WWTP Dam Improvements
Project No. 90217104
Castroville, Medina County, Texas

Exhibit

6

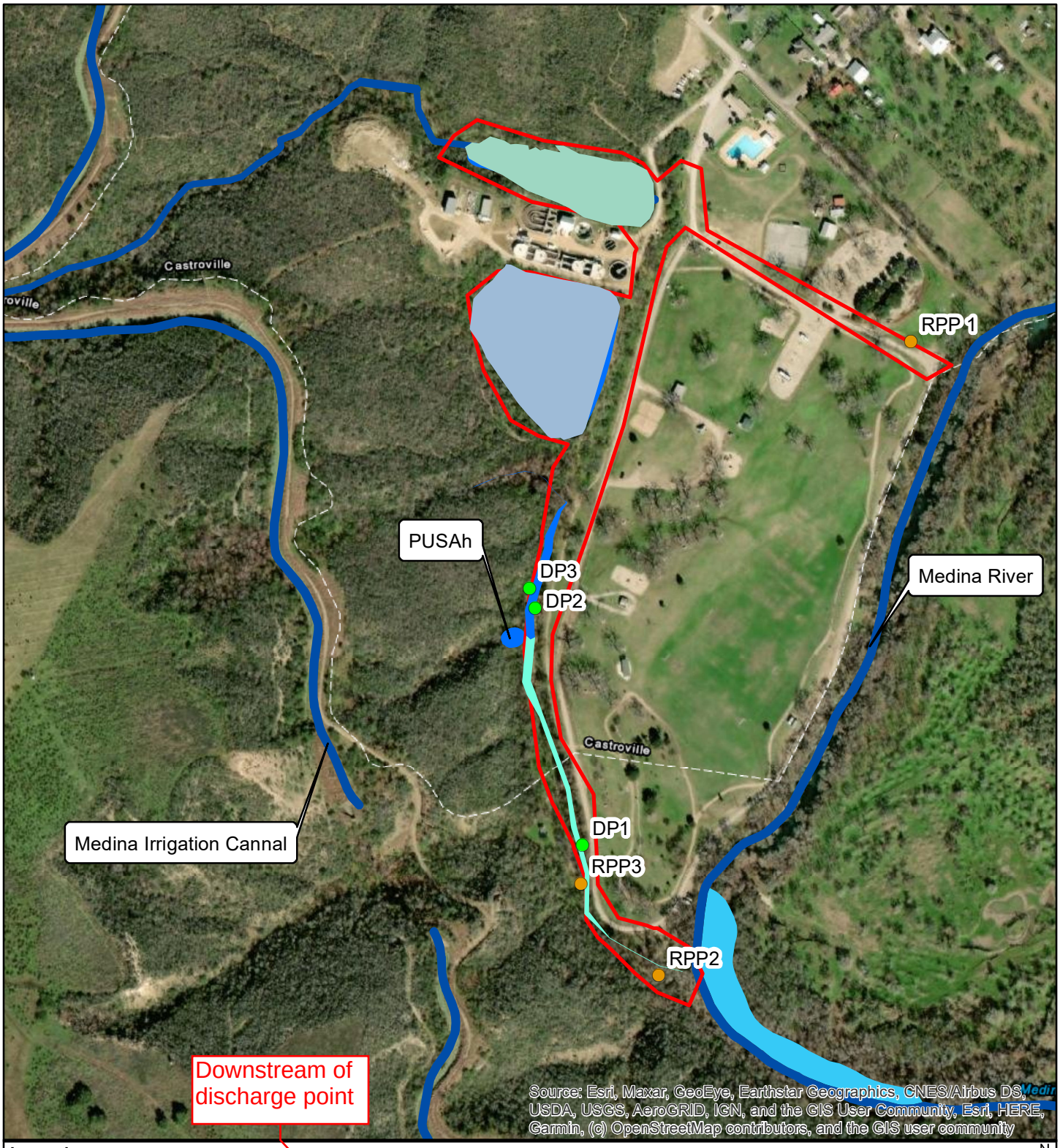

Project Mngr:	JTP
Drawn By:	AES
Checked By:	JTP
Approved By:	JTP

Project No.	90217104
Scale:	1 in = 420.8 ft
TBPE Firm No.	F-3272
Date:	March 2022

Terracon
Explore with us
6911 Blanco Road San Antonio, TX 78216
PH (210) 641-2112 Fax (210) 641-2124

Jurisdictional WOTUS Map

Castroville WWTP Dam Improvements
Project No. 90217104
Castroville, Media County, Texas

Exhibit

7

APPENDIX B
PHOTO LOG



Photo #1 – Upstream view of the OHWM (OHWM 1) of the Medina river at Castroville Regional Park in Castroville, TX.

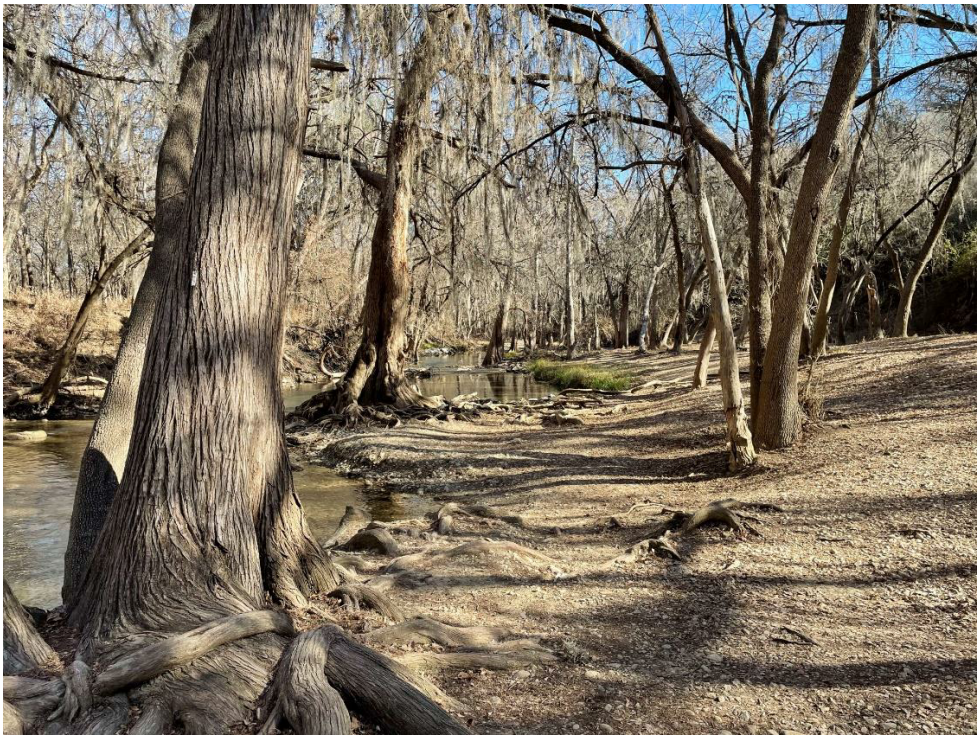

Photo #2 – Downstream view of the OHWM (OHWM 1) of the Medina River at Castroville Regional Park in Castroville, TX.



Photo #3 – Northern view of the riparian area (RPP 2) along the intermittent tributary at Castroville Regional Park in Castroville, TX.



Photo #4 – Eastern view of the riparian area (RPP 2) along the intermittent tributary at Castroville Regional Park in Castroville, TX.



Photo #5 – Southern view of the riparian area (RPP 2) along the intermittent tributary at Castroville Regional Park in Castroville, TX.



Photo #6 – Western view of the riparian area (RPP 2) along the intermittent tributary at Castroville Regional Park in Castroville, TX.



Photo #7 – Upstream view of the OHWM (OHWM 2) of the intermittent tributary at Castroville Regional Park in Castroville, TX.



Photo #8 – Downstream view of the OHWM (OHWM 2) of the intermittent tributary at Castroville Regional Park in Castroville, TX.



Photo #9 –Northern view of the riparian area (RPP 3) near drainage tubes along the intermittent tributary at Castroville Regional Park in Castroville, TX.



Photo #10 –Eastern view of the riparian area (RPP 3) near drainage tubes along the intermittent tributary at Castroville Regional Park in Castroville, TX.



Photo #11 –Southern view of the riparian area (RPP 3) near drainage tubes along the intermittent tributary at Castroville Regional Park in Castroville, TX.



Photo #12 –Western view of the riparian area (RPP 3) near drainage tubes along the intermittent tributary at Castroville Regional Park in Castroville, TX.



Photo #13 – Upstream view of the OHWM (OHWM 3) of the intermittent tributary at Castroville Regional Park in Castroville, TX.



Photo #14 – Downstream view of the OHWM (OHWM 3) of the intermittent tributary at Castroville Regional Park in Castroville, TX.



Photo #15 – Upstream view of OHWM (OHWM 4) of the intermittent tributary at Castroville Regional Park in Castroville, TX.



Photo #16 – Downstream view of OHWM (OHWM 4) of the intermittent tributary at Castroville Regional Park in Castroville, TX.



Photo #17 – Upstream view of OHWM (OHWM 5) of the intermittent tributary at Castroville Regional Park in Castroville, TX.



Photo #18 – Downstream view of OHWM (OHWM 5) of the intermittent tributary at Castroville Regional Park in Castroville, TX.



Photo #19 – Upstream view of OHWM (OHWM 6) of the intermittent tributary at Castroville Regional Park in Castroville, TX

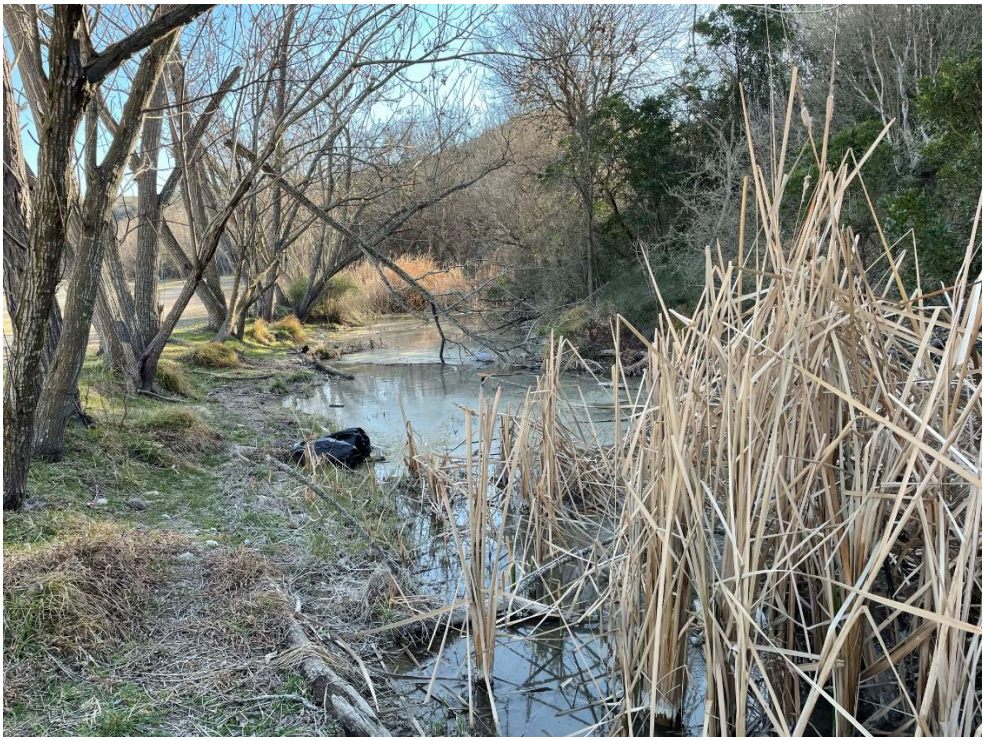

Photo #20 – Downstream view of OHWM (OHWM 6) of the intermittent tributary at Castroville Regional Park in Castroville, TX.



Photo #21 – Upstream view of OHWM (OHWM 7) of the intermittent tributary at Castroville Regional Park in Castroville, TX.



Photo #22 – Downstream view of OHWM (OHWM 7) of the ephemeral tributary at Castroville Regional Park in Castroville, TX.



Photo #23 – Upstream view of OHWM (OHWM 8) of the ephemeral tributary at Castroville Regional Park in Castroville, TX.



Photo #24 – Downstream view of OHWM (OHWM 8) of the ephemeral tributary at Castroville Regional Park in Castroville, TX.



Photo #25 – Upstream view of OHWM (OHWM 9) of the ephemeral tributary at Castroville Regional Park in Castroville, TX.



Photo #26 – Downstream view of OHWM (OHWM 9) of the ephemeral tributary at Castroville Regional Park in Castroville, TX.





Photo #28 – Upstream view of the wastewater treatment plant outlet in the intermittent tributary at Castroville Regional Park in Castroville, TX.



Photo #29 – Eastern view of the Pond 1 at Castroville Regional Park in Castroville, TX.



Photo #30 – Southern view of the Pond 1 at Castroville Regional Park in Castroville, TX.



Photo #31 – Western view of the Pond 1 at Castroville Regional Park in Castroville, TX.



Photo #32 – Northern view of Pond 2 at Castroville Regional Park in Castroville, TX.



Photo #33 – Eastern view of the Pond 2 at Castroville Regional Park in Castroville, TX.



Photo #34 – Western view of Pond 2 at Castroville Regional Park in Castroville, TX.



Photo #35 – Northern view of datapoint #1 (DP 1) in the intermittent tributary bed at Castroville Regional Park in Castroville, TX.



Photo #36 – Eastern view of datapoint #1 (DP 1) in the intermittent tributary bed at Castroville Regional Park in Castroville, TX.



Photo #37 – Southern view of datapoint #1 (DP 1) in the intermittent tributary bed at Castroville Regional Park in Castroville, TX.



Photo #38 – Western view of datapoint #1 (DP 1) in the intermittent tributary bed at Castroville Regional Park in Castroville, TX.



Photo #39 – Soil profile of datapoint #1 (DP 1) in the intermittent tributary bed at Castroville Regional Park in Castroville, TX



Photo #40 – Northern view of datapoint #2 (DP 2) in the intermittent tributary bed at Castroville Regional Park in Castroville, TX.



Photo #41 – Eastern view of datapoint #2 (DP 2) in the intermittent tributary bed at Castroville Regional Park in Castroville, TX.



Photo #42 – Southern view of datapoint #2 (DP 2) in the intermittent tributary bed at Castroville Regional Park in Castroville, TX.



Photo #43 – Western view of datapoint #2 (DP 2) in the intermittent tributary bed at Castroville Regional Park in Castroville, TX.



Photo #44 – Soil profile of datapoint #2 (DP 2) in the intermittent tributary bed at Castroville Regional Park in Castroville, TX.



Photo #45 – Northern view of datapoint #3 (DP 3) in the intermittent tributary bed at Castroville Regional Park in Castroville, TX.



Photo #46 – Eastern view of datapoint #3 (DP 3) in the intermittent tributary bed at Castroville Regional Park in Castroville, TX.



Photo #47 – Southern view of datapoint #3 (DP 3) in the intermittent tributary bed at Castroville Regional Park in Castroville, TX.



Photo #48 – Western view of datapoint #3 (DP 3) in the intermittent tributary bed at Castroville Regional Park in Castroville, TX.

APPENDIX C
DATA FORMS

WETLAND DETERMINATION DATA FORM – Great Plains Region

Project/Site: Castroville WWTP City/County: Castroville/ Medina Sampling Date: 2/15/2022

Applicant/Owner: City of Castroville State: Tx Sampling Point: DP1

Investigator(s): AES, AA Section, Township, Range:

Landform (hillslope, terrace, etc.): Stream Bed Local relief (concave, convex, none): Concave Slope (%): 1

Subregion (LRR): LRRI Lat: Long: Datum:

Soil Map Unit Name: Atco loam, 1 to 3 percent slopes (AtB) NWI classification: N/A

Are climatic / hydrologic conditions on the site typical for this time of year? Yes ____ No ____ (If no, explain in Remarks.)

Are Vegetation ____, Soil ____, or Hydrology ____ significantly disturbed? Are "Normal Circumstances" present? Yes ✔ No ____

Are Vegetation ____, Soil ____, or Hydrology ____ naturally problematic? (If needed, explain any answers in Remarks.)

SUMMARY OF FINDINGS – Attach site map showing sampling point locations, transects, important features, etc.

Hydrophytic Vegetation Present?	Yes ✔	No ____	**Is the Sampled Area within a Wetland?** Yes ✔ No ____
Hydric Soil Present?	Yes ✔	No ____	
Wetland Hydrology Present?	Yes ✔	No ____	

Remarks:

VEGETATION – Use scientific names of plants.

Tree Stratum (Plot size: 30')	Absolute % Cover	Dominant Species?	Indicator Status
1. N/A			
2.			
3.			
4.			
	0 = Total Cover		
Sapling/Shrub Stratum (Plot size: 15')			
1. N/A			
2.			
3.			
4.			
5.			
	0 = Total Cover		
Herb Stratum (Plot size: 5')			
1. N/A			
2.			
3.			
4.			
5.			
6.			
7.			
8.			
9.			
10.			
	0 = Total Cover		
Woody Vine Stratum (Plot size: 30')			
1. N/A			
2.			
	0 = Total Cover		

% Bare Ground in Herb Stratum 100

Dominance Test worksheet:

Number of Dominant Species That Are OBL, FACW, or FAC (excluding FAC−): ____ (A)

Total Number of Dominant Species Across All Strata: ____ (B)

Percent of Dominant Species That Are OBL, FACW, or FAC: ____ (A/B)

Prevalence Index worksheet:

Total % Cover of:	Multiply by:	
OBL species	x 1 =	
FACW species	x 2 =	
FAC species	x 3 =	
FACU species	x 4 =	
UPL species	x 5 =	
Column Totals: (A)		(B)

Prevalence Index = B/A = ____

Hydrophytic Vegetation Indicators:

___ 1 - Rapid Test for Hydrophytic Vegetation

___ 2 - Dominance Test is >50%

___ 3 - Prevalence Index is ≤3.0[1]

___ 4 - Morphological Adaptations[1] (Provide supporting data in Remarks or on a separate sheet)

___ Problematic Hydrophytic Vegetation[1] (Explain)

[1]Indicators of hydric soil and wetland hydrology must be present, unless disturbed or problematic.

Hydrophytic Vegetation Present? Yes ✔ No ____

Remarks:

All vegetation are above the OHWM, and outside the limits to be counted as in-stream vegetation

SOIL

Sampling Point: DP1

Profile Description: (Describe to the depth needed to document the indicator or confirm the absence of indicators.)

Depth (inches)	Matrix Color (moist)	Matrix %	Redox Features Color (moist)	Redox Features %	Type[1]	Loc[2]	Texture	Remarks
0-8	10Y/5	50	7.5YR 5/6	20	D	M	Clay	
	7.5YR 5/6	30						
8-16	10Y/5	33					Clay	
	7.5YR 5/6	33						
	7.5YR 5/6	33						

[1]Type: C=Concentration, D=Depletion, RM=Reduced Matrix, CS=Covered or Coated Sand Grains. [2]Location: PL=Pore Lining, M=Matrix.

Hydric Soil Indicators: (Applicable to all LRRs, unless otherwise noted.)

- ___ Histosol (A1)
- ___ Histic Epipedon (A2)
- ___ Black Histic (A3)
- ___ Hydrogen Sulfide (A4)
- ___ Stratified Layers (A5) (**LRR F**)
- ___ 1 cm Muck (A9) (**LRR F, G, H**)
- ___ Depleted Below Dark Surface (A11)
- ___ Thick Dark Surface (A12)
- ___ Sandy Mucky Mineral (S1)
- ___ 2.5 cm Mucky Peat or Peat (S2) (**LRR G, H**)
- ___ 5 cm Mucky Peat or Peat (S3) (**LRR F**)
- ___ Sandy Gleyed Matrix (S4)
- ___ Sandy Redox (S5)
- ___ Stripped Matrix (S6)
- ___ Loamy Mucky Mineral (F1)
- ✔ Loamy Gleyed Matrix (F2)
- ✔ Depleted Matrix (F3)
- ___ Redox Dark Surface (F6)
- ___ Depleted Dark Surface (F7)
- ✔ Redox Depressions (F8)
- ___ High Plains Depressions (F16) (**MLRA 72 & 73 of LRR H**)

Indicators for Problematic Hydric Soils[3]:

- ___ 1 cm Muck (A9) (**LRR I, J**)
- ___ Coast Prairie Redox (A16) (**LRR F, G, H**)
- ___ Dark Surface (S7) (**LRR G**)
- ___ High Plains Depressions (F16) (**LRR H outside of MLRA 72 & 73**)
- ___ Reduced Vertic (F18)
- ___ Red Parent Material (TF2)
- ___ Very Shallow Dark Surface (TF12)
- ___ Other (Explain in Remarks)

[3]Indicators of hydrophytic vegetation and wetland hydrology must be present, unless disturbed or problematic.

Restrictive Layer (if present):

Type: _____

Depth (inches): _____

Hydric Soil Present? **Yes** ✔ **No** ___

Remarks:

Black organic matter streaks become more prominent through the soil profile depth.
Soil moist, clayey, and sticky

HYDROLOGY

Wetland Hydrology Indicators:

Primary Indicators (minimum of one required; check all that apply)

- ___ Surface Water (A1)
- ___ High Water Table (A2)
- ___ Saturation (A3)
- ___ Water Marks (B1)
- ___ Sediment Deposits (B2)
- ___ Drift Deposits (B3)
- ✔ Algal Mat or Crust (B4)
- ___ Iron Deposits (B5)
- ___ Inundation Visible on Aerial Imagery (B7)
- ✔ Water-Stained Leaves (B9)
- ___ Salt Crust (B11)
- ___ Aquatic Invertebrates (B13)
- ___ Hydrogen Sulfide Odor (C1)
- ___ Dry-Season Water Table (C2)
- ___ Oxidized Rhizospheres on Living Roots (C3) (**where not tilled**)
- ___ Presence of Reduced Iron (C4)
- ___ Thin Muck Surface (C7)
- ___ Other (Explain in Remarks)

Secondary Indicators (minimum of two required)

- ___ Surface Soil Cracks (B6)
- ✔ Sparsely Vegetated Concave Surface (B8)
- ✔ Drainage Patterns (B10)
- ___ Oxidized Rhizospheres on Living Roots (C3) (**where tilled**)
- ___ Crayfish Burrows (C8)
- ___ Saturation Visible on Aerial Imagery (C9)
- ✔ Geomorphic Position (D2)
- ___ FAC-Neutral Test (D5)
- ___ Frost-Heave Hummocks (D7) (**LRR F**)

Field Observations:

Surface Water Present? Yes ___ No ✔ Depth (inches): _____

Water Table Present? Yes ___ No ✔ Depth (inches): _____

Saturation Present? (includes capillary fringe) Yes ___ No ✔ Depth (inches): _____

Wetland Hydrology Present? **Yes** ✔ **No** ___

Describe Recorded Data (stream gauge, monitoring well, aerial photos, previous inspections), if available:

Remarks:

Soil moist, but not saturated. OHWM at 10' wide, 5.5' deep

WETLAND DETERMINATION DATA FORM – Great Plains Region

Project/Site: Castroville WWTP City/County: Castroville/ Medina Sampling Date: 3/01/2022

Applicant/Owner: City of Castroville State: Tx Sampling Point: DP 2

Investigator(s): AES, CA Section, Township, Range: R38601

Landform (hillslope, terrace, etc.): Stream Bed Local relief (concave, convex, none): Concave Slope (%): 1

Subregion (LRR): LRRI Lat: 29.341170 N Long: -98.884679 W Datum: NAD 1983

Soil Map Unit Name: Atco loam, 1 to 3 percent slopes (AtB) NWI classification: N/A

Are climatic / hydrologic conditions on the site typical for this time of year? Yes _____ No _____ (If no, explain in Remarks.)

Are Vegetation _____, Soil _____, or Hydrology _____ significantly disturbed? Are "Normal Circumstances" present? Yes ✔ No _____

Are Vegetation _____, Soil _____, or Hydrology _____ naturally problematic? (If needed, explain any answers in Remarks.)

SUMMARY OF FINDINGS – Attach site map showing sampling point locations, transects, important features, etc.

Hydrophytic Vegetation Present?	Yes ✔	No _____	**Is the Sampled Area within a Wetland?** Yes ✔ No _____
Hydric Soil Present?	Yes ✔	No _____	
Wetland Hydrology Present?	Yes ✔	No _____	

Remarks:

VEGETATION – Use scientific names of plants.

Tree Stratum (Plot size: 30')	Absolute % Cover	Dominant Species?	Indicator Status
1. *Salix nigra*	25	Y	FACW
2. *Celtis laevigata*	5	N	FAC
3. *Melia azedarach*	5	N	FACU
4.			
	35	= Total Cover	
Sapling/Shrub Stratum (Plot size: 15')			
1. *N/A*			
2.			
3.			
4.			
5.			
	0	= Total Cover	
Herb Stratum (Plot size: 5')			
1. *Typha latifolia*	20	Y	OBL
2. *Rubus apogaeus*	3	N	FACU
3. *Cymbopogon citratus*	10	N	N/A
4. *Hydrocotyle umbellata*	15	Y	OBL
5. *Andropogon glomeratus*	25	Y	FACW
6.			
7.			
8.			
9.			
10.			
	73	= Total Cover	
Woody Vine Stratum (Plot size: 30')			
1. *N/A*			
2.			
	0	= Total Cover	

% Bare Ground in Herb Stratum 100

Dominance Test worksheet:

Number of Dominant Species That Are OBL, FACW, or FAC (excluding FAC−): 4 (A)

Total Number of Dominant Species Across All Strata: 4 (B)

Percent of Dominant Species That Are OBL, FACW, or FAC: 100 (A/B)

Prevalence Index worksheet:

Total % Cover of:		Multiply by:	
OBL species	20	x 1 =	20
FACW species	50	x 2 =	100
FAC species	5	x 3 =	15
FACU species	8	x 4 =	32
UPL species	0	x 5 =	0
Column Totals:	83 (A)		167 (B)

Prevalence Index = B/A = **2.01**

Hydrophytic Vegetation Indicators:

___ 1 - Rapid Test for Hydrophytic Vegetation

✔ 2 - Dominance Test is >50%

✔ 3 - Prevalence Index is ≤3.0[1]

___ 4 - Morphological Adaptations[1] (Provide supporting data in Remarks or on a separate sheet)

___ Problematic Hydrophytic Vegetation[1] (Explain)

[1]Indicators of hydric soil and wetland hydrology must be present, unless disturbed or problematic.

Hydrophytic Vegetation Present? Yes ✔ No _____

Remarks:

On the low terrace, within the OHWM of the stream

SOIL

Sampling Point: DP 2

Profile Description: (Describe to the depth needed to document the indicator or confirm the absence of indicators.)

Depth (inches)	Matrix Color (moist)	Matrix %	Redox Features Color (moist)	Redox Features %	Type[1]	Loc[2]	Texture	Remarks
0-1	10Y/5	83	10YR 3/2	10	C	M	Clay loam	Wet, saturated
			5YR 4/6	5	C	PL		
			10YR 2/1	2	C	M		
1-5	10Y/5	93	5YR 4/6	5	C	PL	Clay	
			10YR 2/1	2	C	M		
5-12	10YR 4/2	85	5YR 4/6	15	C	M	Clay	

[1]Type: C=Concentration, D=Depletion, RM=Reduced Matrix, CS=Covered or Coated Sand Grains. [2]Location: PL=Pore Lining, M=Matrix.

Hydric Soil Indicators: (Applicable to all LRRs, unless otherwise noted.)

- ___ Histosol (A1)
- ___ Histic Epipedon (A2)
- ___ Black Histic (A3)
- ___ Hydrogen Sulfide (A4)
- ___ Stratified Layers (A5) (**LRR F**)
- ___ 1 cm Muck (A9) (**LRR F, G, H**)
- ___ Depleted Below Dark Surface (A11)
- ___ Thick Dark Surface (A12)
- ___ Sandy Mucky Mineral (S1)
- ___ 2.5 cm Mucky Peat or Peat (S2) (**LRR G, H**)
- ___ 5 cm Mucky Peat or Peat (S3) (**LRR F**)
- ___ Sandy Gleyed Matrix (S4)
- ___ Sandy Redox (S5)
- ___ Stripped Matrix (S6)
- ___ Loamy Mucky Mineral (F1)
- ✔ Loamy Gleyed Matrix (F2)
- ___ Depleted Matrix (F3)
- ___ Redox Dark Surface (F6)
- ___ Depleted Dark Surface (F7)
- ___ Redox Depressions (F8)
- ___ High Plains Depressions (F16) (**MLRA 72 & 73 of LRR H**)

Indicators for Problematic Hydric Soils[3]:

- ___ 1 cm Muck (A9) (**LRR I, J**)
- ___ Coast Prairie Redox (A16) (**LRR F, G, H**)
- ___ Dark Surface (S7) (**LRR G**)
- ___ High Plains Depressions (F16) (**LRR H outside of MLRA 72 & 73**)
- ___ Reduced Vertic (F18)
- ___ Red Parent Material (TF2)
- ___ Very Shallow Dark Surface (TF12)
- ___ Other (Explain in Remarks)

[3]Indicators of hydrophytic vegetation and wetland hydrology must be present, unless disturbed or problematic.

Restrictive Layer (if present):

Type: _____

Depth (inches): _____

Hydric Soil Present? Yes ✔ No ___

Remarks:

black streaks through out the profile, gleyed soil

HYDROLOGY

Wetland Hydrology Indicators:

Primary Indicators (minimum of one required; check all that apply)

- ✔ Surface Water (A1)
- ✔ High Water Table (A2)
- ✔ Saturation (A3)
- ✔ Water Marks (B1)
- ___ Sediment Deposits (B2)
- ✔ Drift Deposits (B3)
- ___ Algal Mat or Crust (B4)
- ___ Iron Deposits (B5)
- ✔ Inundation Visible on Aerial Imagery (B7)
- ✔ Water-Stained Leaves (B9)
- ___ Salt Crust (B11)
- ✔ Aquatic Invertebrates (B13)
- ___ Hydrogen Sulfide Odor (C1)
- ___ Dry-Season Water Table (C2)
- ___ Oxidized Rhizospheres on Living Roots (C3) (**where not tilled**)
- ___ Presence of Reduced Iron (C4)
- ___ Thin Muck Surface (C7)
- ___ Other (Explain in Remarks)

Secondary Indicators (minimum of two required)

- ___ Surface Soil Cracks (B6)
- ✔ Sparsely Vegetated Concave Surface (B8)
- ✔ Drainage Patterns (B10)
- ___ Oxidized Rhizospheres on Living Roots (C3) (**where tilled**)
- ___ Crayfish Burrows (C8)
- ___ Saturation Visible on Aerial Imagery (C9)
- ✔ Geomorphic Position (D2)
- ___ FAC-Neutral Test (D5)
- ___ Frost-Heave Hummocks (D7) (**LRR F**)

Field Observations:

Surface Water Present? Yes ✔ No ___ Depth (inches): 2

Water Table Present? Yes ✔ No ___ Depth (inches): 5

Saturation Present? (includes capillary fringe) Yes ✔ No ___ Depth (inches): _____

Wetland Hydrology Present? Yes ✔ No ___

Describe Recorded Data (stream gauge, monitoring well, aerial photos, previous inspections), if available:

Remarks:

Surface water from the stream within 2' of the data point. water table present at 5"

WETLAND DETERMINATION DATA FORM – Great Plains Region

Project/Site: Castroville WWTP City/County: Castroville/ Medina Sampling Date: 3/01/2022

Applicant/Owner: City of Castroville State: Tx Sampling Point: DP 3

Investigator(s): AES, CA Section, Township, Range: R38601

Landform (hillslope, terrace, etc.): Stream Bed Local relief (concave, convex, none): Concave Slope (%): 1

Subregion (LRR): LRRI Lat: 29.341342 N Long: -98.884722 W Datum: NAD 1983

Soil Map Unit Name: Atco loam, 1 to 3 percent slopes (AtB) NWI classification: N/A

Are climatic / hydrologic conditions on the site typical for this time of year? Yes _____ No _____ (If no, explain in Remarks.)

Are Vegetation _____, Soil _____, or Hydrology _____ significantly disturbed? Are "Normal Circumstances" present? Yes ✔ No _____

Are Vegetation _____, Soil _____, or Hydrology _____ naturally problematic? (If needed, explain any answers in Remarks.)

SUMMARY OF FINDINGS – Attach site map showing sampling point locations, transects, important features, etc.

Hydrophytic Vegetation Present?	Yes _____	No ✔	**Is the Sampled Area within a Wetland?** Yes ✔ No _____
Hydric Soil Present?	Yes ✔	No _____	
Wetland Hydrology Present?	Yes ✔	No _____	

Remarks:

VEGETATION – Use scientific names of plants.

Tree Stratum (Plot size: 30')	Absolute % Cover	Dominant Species?	Indicator Status
1. *Salix nigra*	40	Y	FACW
2. *Carpinus caroliniana*	5	N	FAC
3. *Celtis laevigata*	5	N	FAC
4. *Melia azedarach*	5	N	FACU
	55	= Total Cover	
Sapling/Shrub Stratum (Plot size: 15')			
1. *Kalmia latifolia*	20	Y	FACU
2.			
3.			
4.			
5.			
	20	= Total Cover	
Herb Stratum (Plot size: 5')			
1. *Parietaria pensylvanica*	2	Y	FAC
2. *Chaerophyllum tainturieri*	2	Y	FAC
3.			
4.			
5.			
6.			
7.			
8.			
9.			
10.			
	4	= Total Cover	
Woody Vine Stratum (Plot size: 30')			
1. *N/A*			
2.			
	0	= Total Cover	

% Bare Ground in Herb Stratum 100

Dominance Test worksheet:

Number of Dominant Species That Are OBL, FACW, or FAC (excluding FAC−): 3 (A)

Total Number of Dominant Species Across All Strata: 4 (B)

Percent of Dominant Species That Are OBL, FACW, or FAC: 75 (A/B)

Prevalence Index worksheet:

Total % Cover of:		Multiply by:	
OBL species	0	x 1 =	0
FACW species	40	x 2 =	80
FAC species	16	x 3 =	48
FACU species	25	x 4 =	100
UPL species	0	x 5 =	0
Column Totals:	81 (A)		228 (B)

Prevalence Index = B/A = **2.81**

Hydrophytic Vegetation Indicators:

___ 1 - Rapid Test for Hydrophytic Vegetation

✔ 2 - Dominance Test is >50%

✔ 3 - Prevalence Index is ≤3.0[1]

___ 4 - Morphological Adaptations[1] (Provide supporting data in Remarks or on a separate sheet)

___ Problematic Hydrophytic Vegetation[1] (Explain)

[1]Indicators of hydric soil and wetland hydrology must be present, unless disturbed or problematic.

Hydrophytic Vegetation Present? Yes ✔ No _____

Remarks:

SOIL

Sampling Point: DP 3

Profile Description: (Describe to the depth needed to document the indicator or confirm the absence of indicators.)

Depth (inches)	Matrix Color (moist)	%	Redox Features Color (moist)	%	Type[1]	Loc[2]	Texture	Remarks
0-6	10 YR 5-4	80	10 YR 3/2	20	C	M	Loam	Very Dry

[1]Type: C=Concentration, D=Depletion, RM=Reduced Matrix, CS=Covered or Coated Sand Grains. [2]Location: PL=Pore Lining, M=Matrix.

Hydric Soil Indicators: (Applicable to all LRRs, unless otherwise noted.)

- ___ Histosol (A1)
- ___ Histic Epipedon (A2)
- ___ Black Histic (A3)
- ___ Hydrogen Sulfide (A4)
- ___ Stratified Layers (A5) (**LRR F**)
- ___ 1 cm Muck (A9) (**LRR F, G, H**)
- ___ Depleted Below Dark Surface (A11)
- ___ Thick Dark Surface (A12)
- ___ Sandy Mucky Mineral (S1)
- ___ 2.5 cm Mucky Peat or Peat (S2) (**LRR G, H**)
- ___ 5 cm Mucky Peat or Peat (S3) (**LRR F**)
- ___ Sandy Gleyed Matrix (S4)
- ___ Sandy Redox (S5)
- ___ Stripped Matrix (S6)
- ___ Loamy Mucky Mineral (F1)
- ___ Loamy Gleyed Matrix (F2)
- ___ Depleted Matrix (F3)
- ___ Redox Dark Surface (F6)
- ___ Depleted Dark Surface (F7)
- ___ Redox Depressions (F8)
- ___ High Plains Depressions (F16) (**MLRA 72 & 73 of LRR H**)

Indicators for Problematic Hydric Soils[3]:

- ___ 1 cm Muck (A9) (**LRR I, J**)
- ___ Coast Prairie Redox (A16) (**LRR F, G, H**)
- ___ Dark Surface (S7) (**LRR G**)
- ___ High Plains Depressions (F16) (**LRR H outside of MLRA 72 & 73**)
- ___ Reduced Vertic (F18)
- ___ Red Parent Material (TF2)
- ___ Very Shallow Dark Surface (TF12)
- ___ Other (Explain in Remarks)

[3]Indicators of hydrophytic vegetation and wetland hydrology must be present, unless disturbed or problematic.

Restrictive Layer (if present):

Type: _____

Depth (inches): _____

Hydric Soil Present? Yes _____ No ✔

Remarks:

High amount of leaf litter within the first 1/2 in of soil; very rocky, with over 3" diameter stones throughout the profile.

HYDROLOGY

Wetland Hydrology Indicators:

Primary Indicators (minimum of one required; check all that apply)

- ___ Surface Water (A1)
- ___ High Water Table (A2)
- ___ Saturation (A3)
- ___ Water Marks (B1)
- ___ Sediment Deposits (B2)
- ___ Drift Deposits (B3)
- ___ Algal Mat or Crust (B4)
- ___ Iron Deposits (B5)
- ___ Inundation Visible on Aerial Imagery (B7)
- ___ Water-Stained Leaves (B9)
- ___ Salt Crust (B11)
- ___ Aquatic Invertebrates (B13)
- ___ Hydrogen Sulfide Odor (C1)
- ___ Dry-Season Water Table (C2)
- ___ Oxidized Rhizospheres on Living Roots (C3) (**where not tilled**)
- ___ Presence of Reduced Iron (C4)
- ___ Thin Muck Surface (C7)
- ___ Other (Explain in Remarks)

Secondary Indicators (minimum of two required)

- ___ Surface Soil Cracks (B6)
- ___ Sparsely Vegetated Concave Surface (B8)
- ___ Drainage Patterns (B10)
- ___ Oxidized Rhizospheres on Living Roots (C3) (**where tilled**)
- ___ Crayfish Burrows (C8)
- ___ Saturation Visible on Aerial Imagery (C9)
- ___ Geomorphic Position (D2)
- ___ FAC-Neutral Test (D5)
- ___ Frost-Heave Hummocks (D7) (**LRR F**)

Field Observations:

Surface Water Present? Yes _____ No ✔ Depth (inches): _____

Water Table Present? Yes _____ No ✔ Depth (inches): _____

Saturation Present? (includes capillary fringe) Yes _____ No ✔ Depth (inches): _____

Wetland Hydrology Present? Yes _____ No ✔

Describe Recorded Data (stream gauge, monitoring well, aerial photos, previous inspections), if available:

Remarks:

APPENDIX D
COMMON ACRONYM

COMMON ACRONYMS

AgACIS	Agriculture Applied Climate Information System
CLOMR	Conditional Letter of Map Revision
CWA	Clean Water Act
DAREM	Direct Antecedent Rainfall Evaluation Method
DFIRM	Digital Flood Insurance Rate Map
DP	Data Point
EMS	Ecological Mapping Systems
EPA	Environmental Protection Agency
FEMA	Federal Emergency Management Agency
FIRM	Flood Insurance Rate Map
GIS	Geographic Information System
GPS	Global Positioning System
IH	Interstate Highway
LiDAR	Light Detection and Ranging
NAIP	National Agricultural Imagery Program
NRCS	Natural Resources Conservation Service
NRPW	Non-Relatively Permanent Water
NWI	National Wetland Inventory
OHWM	Ordinary High Water Mark
PJD	Preliminary Jurisdictional Determination
RHA	Rivers and Harbors Act
RGL	Regional Guidance Letter
RPW	Relatively Permanent Water
TNRIS	Texas Natural Resource Information System
TPWD	Texas Parks and Wildlife Department
TNW	Traditionally Navigable Water
U.S.	United States
USACE	U.S. Army Corps of Engineers
USDA	U.S. Department of Agriculture
USFWS	U.S. Fish and Wildlife Service
USGS	U.S. Geologic Survey
WOTUS	Waters of the U.S.

POLLUTION CONTROL SERVICES

Report of Sample Analysis

Client Information	Sample Information	Laboratory Information
John Gomez **Castroville, City of** **703 Paris St.** **Castroville, TX 78009**	**Project Name: Annual Soils** **§Sample ID: Park 0-6"** **Matrix: Soil** **Date/Time Taken: 2/27/2024 1015**	**PCS Sample #: 752553 Page 1 of 1** **Date/Time Received: 2/27/2024 13:58** **Report Date: 3/15/2024** Approved by: Chuck Wallgren, President

Test Description	Flag	Result	Units	RL	Analysis Date/Time	Method	Analyst
pH		8.1	S.U.	N/A	3/8/2024 15:30	SW846 9045	CLH
Conductivity, Specific		156	µmhos/cm at 25° C	N/A	3/5/2024 14:25	SM 2510B	PML
Nitrate-N		0.6	mg/kg	0.1	3/5/2024 11:45	EPA 352.1	EMV
Kjeldahl-N, Total	!	1,895	mg/kg	3	2/29/2024 10:00	SM 4500-N B/C	PML
Nitrogen, Total		1,896	mg/kg	1	3/5/2024 11:45	Calculation	CFW
Phosphorous/ICP (Mehlich III)		7.20	mg/kg	5.96	3/14/2024 12:53	Mehlich 3/EPA 200.7	DJL
Potassium/ICP (Mehlich III)		860	mg/kg	5.96	3/14/2024 12:53	Mehlich 3/EPA 200.7	DJL
Total Solids		83.9	%	0.10	2/27/2024 16:45	SM 2540 G	EMV

Quality Assurance Summary

Test Description	Precision	Limit	LCL	MS	MSD	UCL	LCS	LCS Limit	Blank
pH	N/A	N/A	N/A			N/A			
Conductivity, Specific	N/A	N/A	N/A			N/A			
Nitrate-N	2	10	70	102	101	130	99	85 - 115	
Kjeldahl-N, Total	1	13	83	99	98	114	101	85 - 115	<3
Nitrogen, Total	N/A	N/A	N/A			N/A			
Phosphorous/ICP (Mehlich III)	6	20	75	83	88	125	100	85 - 115	
Potassium/ICP (Mehlich III)	4	20	70	*N/C	*N/C	130	100	85 - 115	
Total Solids	1	12	N/A			N/A			

***Quality Statement:** All supporting quality data adhered to data quality objectives and test results meet the requirements of NELAC unless otherwise noted as flagged exceptions or in a case narrative attachment. Reports with full quality data deliverables are available on request.*

*Approved for release per QA Plan, Exception to Limits - QAM Section 13-4
! Parameter not NELAP certifiable
§ Reported on a Dry Weight Basis

These analytical results relate only to the sample tested.
All data is reported on an 'As Is' basis unless designated as 'Dry Wt'.
RL = Reporting Limits
**N/C = Not Calculated, Sample Concentration Greater than 5 times the Spike Level*

www.pcslab.net
chuck@pcslab.net
1532 Universal City Blvd
Universal City, TX 78148-3318
Main: 210-340-0343
Fax: 210-658-7903
This report cannot be reproduced or duplicated, except in full, without prior written consent from Pollution Control Services.

POLLUTION CONTROL SERVICES

Report of Sample Analysis

Client Information	Sample Information	Laboratory Information
John Gomez **Castroville, City of** **703 Paris St.** **Castroville, TX 78009**	**Project Name: Annual Soils** **§Sample ID: Park 6-18"** **Matrix: Soil** **Date/Time Taken: 2/27/2024 1020**	**PCS Sample #: 752554 Page 1 of 1** **Date/Time Received: 2/27/2024 13:58** **Report Date: 3/18/2024** **Approved by:** Chuck Wallgren, President

Test Description	Flag	Result	Units	RL	Analysis Date/Time	Method	Analyst
pH		8.1	S.U.	N/A	3/8/2024 15:30	SW846 9045	CLH
Conductivity, Specific		159	µmhos/cm at 25° C	N/A	3/5/2024 14:25	SM 2510B	PML
Nitrate-N		0.4	mg/kg	0.1	3/5/2024 11:45	EPA 352.1	EMV
Kjeldahl-N, Total	!	1,322	mg/kg	3	3/6/2024 10:00	SM 4500-N B/C	PML
Nitrogen, Total		1,322	mg/kg	1	3/6/2024 10:00	Calculation	CFW
Phosphorous/ICP (Mehlich III)		9.30	mg/kg	5.88	3/14/2024 12:53	Mehlich 3/EPA 200.7	DJL
Potassium/ICP (Mehlich III)		820	mg/kg	5.88	3/14/2024 12:53	Mehlich 3/EPA 200.7	DJL
Total Solids		84.4	%	0.10	2/27/2024 16:45	SM 2540 G	EMV

Quality Assurance Summary

Test Description	Precision	Limit	LCL	MS	MSD	UCL	LCS	LCS Limit	Blank
pH	N/A	N/A	N/A			N/A			
Conductivity, Specific	N/A	N/A	N/A			N/A			
Nitrate-N	2	10	70	102	101	130	99	85 - 115	
Kjeldahl-N, Total	10	13	83	110	100	114	101	85 - 115	<3
Nitrogen, Total	N/A	N/A	N/A			N/A			
Phosphorous/ICP (Mehlich III)	6	20	75	83	88	125	100	85 - 115	
Potassium/ICP (Mehlich III)	4	20	70	*N/C	*N/C	130	100	85 - 115	
Total Solids	1	12	N/A			N/A			

***Quality Statement:** All supporting quality data adhered to data quality objectives and test results meet the requirements of NELAC unless otherwise noted as flagged exceptions or in a case narrative attachment. Reports with full quality data deliverables are available on request.*

*Approved for release per QA Plan, Exception to Limits - QAM Section 13-4
! Parameter not NELAP certifiable
§ Reported on a Dry Weight Basis

These analytical results relate only to the sample tested.
All data is reported on an 'As Is' basis unless designated as 'Dry Wt'.
RL = Reporting Limits
**N/C = Not Calculated, Sample Concentration Greater than 5 times the Spike Level*

www.pcslab.net
chuck@pcslab.net
1532 Universal City Blvd
Universal City, TX 78148-3318
Main: 210-340-0343
Fax: 210-658-7903
This report cannot be reproduced or duplicated, except in full, without prior written consent from Pollution Control Services.

POLLUTION CONTROL SERVICES

Report of Sample Analysis

Client Information	Sample Information	Laboratory Information
John Gomez **Castroville, City of** **703 Paris St.** **Castroville, TX 78009**	**Project Name: Annual Soils** **§Sample ID: Park 18-30"** **Matrix: Soil** **Date/Time Taken: 2/27/2024 1025**	**PCS Sample #: 752555 Page 1 of 1** **Date/Time Received: 2/27/2024 13:58** **Report Date: 3/18/2024** Approved by: Chuck Wallgren, President

Test Description	Flag	Result	Units	RL	Analysis Date/Time	Method	Analyst
pH		8.3	S.U.	N/A	3/8/2024 15:30	SW846 9045	CLH
Conductivity, Specific		192	µmhos/cm at 25° C	N/A	3/5/2024 14:25	SM 2510B	PML
Nitrate-N		0.5	mg/kg	0.1	3/5/2024 11:45	EPA 352.1	EMV
Kjeldahl-N, Total	!	1,072	mg/kg	3	3/6/2024 10:00	SM 4500-N B/C	PML
Nitrogen, Total		1,072	mg/kg	1	3/6/2024 10:00	Calculation	CFW
Phosphorous/ICP (Mehlich III)		8.20	mg/kg	6.06	3/14/2024 12:53	Mehlich 3/EPA 200.7	DJL
Potassium/ICP (Mehlich III)		700	mg/kg	6.06	3/14/2024 12:53	Mehlich 3/EPA 200.7	DJL
Total Solids		82.0	%	0.10	2/27/2024 16:45	SM 2540 G	EMV

Quality Assurance Summary

Test Description	Precision	Limit	LCL	MS	MSD	UCL	LCS	LCS Limit	Blank
pH	N/A	N/A	N/A			N/A			
Conductivity, Specific	N/A	N/A	N/A			N/A			
Nitrate-N	2	10	70	102	101	130	99	85 - 115	
Kjeldahl-N, Total	10	13	83	110	100	114	101	85 - 115	<3
Nitrogen, Total	N/A	N/A	N/A			N/A			
Phosphorous/ICP (Mehlich III)	6	20	75	83	88	125	100	85 - 115	
Potassium/ICP (Mehlich III)	4	20	70	*N/C	*N/C	130	100	85 - 115	
Total Solids	1	12	N/A			N/A			

***Quality Statement:** All supporting quality data adhered to data quality objectives and test results meet the requirements of NELAC unless otherwise noted as flagged exceptions or in a case narrative attachment. Reports with full quality data deliverables are abailable on request.*

*Approved for release per QA Plan, Exception to Limits - QAM Section 13-4

! Parameter not NELAP certifiable

§ Reported on a Dry Weight Basis

These analytical results relate only to the sample tested.
All data is reported on an 'As Is' basis unless designated as 'Dry Wt'.
RL = Reporting Limits
**N/C = Not Calculated, Sample Concentration Greater than 5 times the Spike Level*

www.pcslab.net
chuck@pcslab.net
1532 Universal City Blvd
Universal City, TX 78148-3318
Main: 210-340-0343
Fax: 210-658-7903
This report cannot be reproduced or duplicated, except in full, without prior written consent from Pollution Control Services.

POLLUTION CONTROL SERVICES

Report of Sample Analysis

Client Information	Sample Information	Laboratory Information
John Gomez **Castroville, City of** **703 Paris St.** **Castroville, TX 78009**	**Project Name: Annual Soils** **§Sample ID: Pasture 0-6"** **Matrix: Soil** **Date/Time Taken: 2/27/2024 1105**	**PCS Sample #: 752556 Page 1 of 1** **Date/Time Received: 2/27/2024 13:58** **Report Date: 3/18/2024** Approved by: Chuck Wallgren, President

Test Description	Flag	Result	Units	RL	Analysis Date/Time	Method	Analyst
pH		8.0	S.U.	N/A	3/8/2024 15:40	SW846 9045	CLH
Conductivity, Specific		139	µmhos/cm at 25° C	N/A	3/5/2024 14:25	SM 2510B	PML
Nitrate-N		1.4	mg/kg	0.1	3/5/2024 11:45	EPA 352.1	EMV
Kjeldahl-N, Total	!	1,582	mg/kg	3	3/6/2024 10:00	SM 4500-N B/C	PML
Nitrogen, Total		1,583	mg/kg	1	3/6/2024 10:00	Calculation	CFW
Phosphorous/ICP (Mehlich III)		<6.36	mg/kg	6.36	3/14/2024 12:53	Mehlich 3/EPA 200.7	DJL
Potassium/ICP (Mehlich III)		62.0	mg/kg	6.36	3/14/2024 12:53	Mehlich 3/EPA 200.7	DJL
Total Solids		78.5	%	0.10	2/27/2024 16:45	SM 2540 G	EMV

Quality Assurance Summary

Test Description	Precision	Limit	LCL	MS	MSD	UCL	LCS	LCS Limit	Blank
pH	N/A	N/A	N/A			N/A			
Conductivity, Specific	N/A	N/A	N/A			N/A			
Nitrate-N	2	10	70	102	101	130	99	85 - 115	
Kjeldahl-N, Total	10	13	83	110	100	114	101	85 - 115	<3
Nitrogen, Total	N/A	N/A	N/A			N/A			
Phosphorous/ICP (Mehlich III)	6	20	75	83	88	125	100	85 - 115	
Potassium/ICP (Mehlich III)	4	20	70	*N/C	*N/C	130	100	85 - 115	
Total Solids	1	12	N/A			N/A			

***Quality Statement:** All supporting quality data adhered to data quality objectives and test results meet the requirements of NELAC unless otherwise noted as flagged exceptions or in a case narrative attachment. Reports with full quality data deliverables are available on request.*

*Approved for release per QA Plan, Exception to Limits - QAM Section 13-4
! Parameter not NELAP certifiable
§ Reported on a Dry Weight Basis

These analytical results relate only to the sample tested.
All data is reported on an 'As Is' basis unless designated as 'Dry Wt'.
RL = Reporting Limits
**N/C = Not Calculated, Sample Concentration Greater than 5 times the Spike Level*

www.pcslab.net
chuck@pcslab.net
1532 Universal City Blvd
Universal City, TX 78148-3318
Main: 210-340-0343
Fax: 210-658-7903
This report cannot be reproduced or duplicated, except in full, without prior written consent from Pollution Control Services.

POLLUTION CONTROL SERVICES

Report of Sample Analysis

Client Information	Sample Information	Laboratory Information
John Gomez **Castroville, City of** **703 Paris St.** **Castroville, TX 78009**	**Project Name: Annual Soils** **§Sample ID: Pasture 6-18"** **Matrix: Soil** **Date/Time Taken: 2/27/2024 1110**	**PCS Sample #: 752557 Page 1 of 1** **Date/Time Received: 2/27/2024 13:58** **Report Date: 3/18/2024** Approved by: Chuck Wallgren, President

Test Description	Flag	Result	Units	RL	Analysis Date/Time	Method	Analyst
pH		8.0	S.U.	N/A	3/8/2024 15:40	SW846 9045	CLH
Conductivity, Specific		113	µmhos/cm at 25° C	N/A	3/5/2024 14:25	SM 2510B	PML
Nitrate-N		0.7	mg/kg	0.1	3/5/2024 11:45	EPA 352.1	EMV
Kjeldahl-N, Total	!	1,325	mg/kg	3	3/6/2024 10:00	SM 4500-N B/C	PML
Nitrogen, Total		1,326	mg/kg	1	3/6/2024 10:00	Calculation	CFW
Phosphorous/ICP (Mehlich III)		<6.50	mg/kg	6.50	3/14/2024 12:53	Mehlich 3/EPA 200.7	DJL
Potassium/ICP (Mehlich III)		39.0	mg/kg	6.50	3/14/2024 12:53	Mehlich 3/EPA 200.7	DJL
Total Solids		76.6	%	0.10	2/27/2024 16:45	SM 2540 G	EMV

Quality Assurance Summary

Test Description	Precision	Limit	LCL	MS	MSD	UCL	LCS	LCS Limit	Blank
pH	N/A	N/A	N/A			N/A			
Conductivity, Specific	N/A	N/A	N/A			N/A			
Nitrate-N	2	10	70	102	101	130	99	85 - 115	
Kjeldahl-N, Total	10	13	83	110	100	114	101	85 - 115	<3
Nitrogen, Total	N/A	N/A	N/A			N/A			
Phosphorous/ICP (Mehlich III)	6	20	75	83	88	125	100	85 - 115	
Potassium/ICP (Mehlich III)	4	20	70	*N/C	*N/C	130	100	85 - 115	
Total Solids	1	12	N/A			N/A			

***Quality Statement:** All supporting quality data adhered to data quality objectives and test results meet the requirements of NELAC unless otherwise noted as flagged exceptions or in a case narrative attachment. Reports with full quality data deliverables are available on request.*

*Approved for release per QA Plan, Exception to Limits - QAM Section 13-4
! Parameter not NELAP certifiable
§ Reported on a Dry Weight Basis

These analytical results relate only to the sample tested.
All data is reported on an 'As Is' basis unless designated as 'Dry Wt'.
RL = Reporting Limits
**N/C = Not Calculated, Sample Concentration Greater than 5 times the Spike Level*

www.pcslab.net
chuck@pcslab.net
1532 Universal City Blvd
Universal City, TX 78148-3318
Main: 210-340-0343
Fax: 210-658-7903
This report cannot be reproduced or duplicated, except in full, without prior written consent from Pollution Control Services.

POLLUTION CONTROL SERVICES

Report of Sample Analysis

Client Information	Sample Information	Laboratory Information
John Gomez **Castroville, City of** **703 Paris St.** **Castroville, TX 78009**	**Project Name: Annual Soils** **§Sample ID: Pasture 18-30"** **Matrix: Soil** **Date/Time Taken: 2/27/2024 1115**	**PCS Sample #: 752558 Page 1 of 1** **Date/Time Received: 2/27/2024 13:58** **Report Date: 3/18/2024** Approved by: Chuck Wallgren, President

Test Description	Flag	Result	Units	RL	Analysis Date/Time	Method	Analyst
pH		8.0	S.U.	N/A	3/8/2024 15:40	SW846 9045	CLH
Conductivity, Specific		154	µmhos/cm at 25° C	N/A	3/5/2024 14:25	SM 2510B	PML
Nitrate-N		0.9	mg/kg	0.1	3/5/2024 11:45	EPA 352.1	EMV
Kjeldahl-N, Total	!	1,170	mg/kg	3	3/6/2024 10:00	SM 4500-N B/C	PML
Nitrogen, Total		1,171	mg/kg	1	3/6/2024 10:00	Calculation	CFW
Phosphorous/ICP (Mehlich III)		<6.15	mg/kg	6.15	3/14/2024 12:53	Mehlich 3/EPA 200.7	DJL
Potassium/ICP (Mehlich III)		37.0	mg/kg	6.15	3/14/2024 12:53	Mehlich 3/EPA 200.7	DJL
Total Solids		79.0	%	0.10	2/27/2024 16:45	SM 2540 G	EMV

Quality Assurance Summary

Test Description	Precision Limit	LCL	MS	MSD	UCL	LCS	LCS Limit	Blank
pH	N/A	N/A	N/A			N/A		
Conductivity, Specific	N/A	N/A	N/A			N/A		
Nitrate-N	2	10	70	102	101	130	99	85 - 115	
Kjeldahl-N, Total	10	13	83	110	100	114	101	85 - 115	<3
Nitrogen, Total	N/A	N/A	N/A			N/A		
Phosphorous/ICP (Mehlich III)	6	20	75	83	88	125	100	85 - 115	
Potassium/ICP (Mehlich III)	4	20	70	*N/C	*N/C	130	100	85 - 115	
Total Solids	1	12	N/A			N/A		

***Quality Statement:** All supporting quality data adhered to data quality objectives and test results meet the requirements of NELAC unless otherwise noted as flagged exceptions or in a case narrative attachment. Reports with full quality data deliverables are available on request.*

*Approved for release per QA Plan, Exception to Limits - QAM Section 13-4
! Parameter not NELAP certifiable
§ Reported on a Dry Weight Basis

These analytical results relate only to the sample tested.
All data is reported on an 'As Is' basis unless designated as 'Dry Wt'.
RL = Reporting Limits
**N/C = Not Calculated, Sample Concentration Greater than 5 times the Spike Level*

www.pcslab.net
chuck@pcslab.net
1532 Universal City Blvd
Universal City, TX 78148-3318
Main: 210-340-0343
Fax: 210-658-7903
This report cannot be reproduced or duplicated, except in full, without prior written consent from Pollution Control Services.

POLLUTION CONTROL SERVICES

Chain of Custody Number: 752553

MULTIPLE SAMPLE ANALYSIS REQUEST AND CHAIN OF CUSTODY FORM

Stamp 1st sample and COC as same number

CUSTOMER INFORMATION

Name: Castroville, City of

REPORT INFORMATION

Attention: ~~Roy Clayton~~ Daniel Poyson | Phone: (830) 931-4070 | Fax:

SAMPLE INFORMATION

Project Information: Annual Soils

Report "Soils" ☐ As Is ☐ Dry Wt.

Collected By: Max Lowstrum

Client / Field Sample ID	Collected Date	Collected Time	Field Chlorine Residual mg/L	Composite or Grab	Matrix: DW-Drinking Water; NPW-Non-potable water; WW-Wastewater; LW-Liquid Waste	Container Type	Container Number	Preservative	pH	Conductivity	PIII, KIII	TKN, NO3, Total N	Instructions/Comments: PCS Sample Number
Park 0-6".	Start: 2-27-24 End:	Start: 1015 Am End:		■C ☐G	☐DW ☐NPW ☐WW ■Soil ☐Sludge ☐LW ☐Other	☑P ☐G ☐O	1	☐H_2SO_4 ☐HNO_3 ☐H_3PO_4 ☐NaOH ☐ICE ☐	★	★	★	★	752553 ☐S ☐B ☐N ☐HEM Other:
Park 6-18"	Start: 2-27-24 End:	Start: 1020 Am End:		■C ☐G	☐DW ☐NPW ☐WW ■Soil ☐Sludge ☐LW ☐Other	☑P ☐G ☐O	1	☐H_2SO_4 ☐HNO_3 ☐H_3PO_4 ☐NaOH ☐ICE ☐	★	★	★	★	752554 ☐S ☐B ☐N ☐HEM Other:
Park 18-30"	Start: 2-27-24 End:	Start: 1025 Am End:		■C ☐G	☐DW ☐NPW ☐WW ■Soil ☐Sludge ☐LW ☐Other	☑P ☐G ☐O	1	☐H_2SO_4 ☐HNO_3 ☐H_3PO_4 ☐NaOH ☐ICE ☐	★	★	★	★	752555 ☐S ☐B ☐N ☐HEM Other:
Pasture 0-6"	Start: 2-27-24 End:	Start: 1105 Am End:		■C ☐G	☐DW ☐NPW ☐WW ■Soil ☐Sludge ☐LW ☐Other	☑P ☐G ☐O	1	☐H_2SO_4 ☐HNO_3 ☐H_3PO_4 ☐NaOH ☐ICE ☐	★	★	★	★	752556 ☐S ☐B ☐N ☐HEM Other:
Pasture 6-18"	Start: 2-27-24 End:	Start: 1110 Am End:		■C ☐G	☐DW ☐NPW ☐WW ■Soil ☐Sludge ☐LW ☐Other	☑P ☐G ☐O	1	☐H_2SO_4 ☐HNO_3 ☐H_3PO_4 ☐NaOH ☐ICE ☐	★	★	★	★	752557 ☐S ☐B ☐N ☐HEM Other:
Pasture 18-30"	Start: 2-27-24 End:	Start: 1115 Am End:		■C ☐G	☐DW ☐NPW ☐WW ■Soil ☐Sludge ☐LW ☐Other	☑P ☐G ☐O	1	☐H_2SO_4 ☐HNO_3 ☐H_3PO_4 ☐NaOH ☐ICE ☐	★	★	★	★	752558 ☐S ☐B ☐N ☐HEM Other:
	Start: End:	Start: End:		☐C ☐G	☐DW ☐NPW ☐WW ☐Soil ☐Sludge ☐LW ☐Other	☐P ☐G ☐O		☐H_2SO_4 ☐HNO_3 ☐H_3PO_4 ☐NaOH ☐ICE ☐					☐S ☐B ☐N ☐HEM Other:
	Start: End:	Start: End:		☐C ☐G	☐DW ☐NPW ☐WW ☐Soil ☐Sludge ☐LW ☐Other	☐P ☐G ☐O		☐H_2SO_4 ☐HNO_3 ☐H_3PO_4 ☐NaOH ☐ICE ☐					☐S ☐B ☐N ☐HEM Other:

Required Turnaround: ☐ Routine (6-10 days) | ***EXPEDITE:*** (See Surcharge Schedule) ☐ < 8 Hrs. ☐ < 16 Hrs. ☐ < 24 Hrs. ☐ 5 days ☐ Other: _____ ***Rush Charges Authorized by:***

Sample Archive/Disposal: ☐ Laboratory Standard ☐ Hold for client pick up

Container Type: P = Plastic, G = Glass, O = Other _____ Carrier ID: _____

Relinquished By:		Date: 2-27-24	Time: 12:30 pm	Received By:		Date: 2-27-24	Time: 12:32 pm
Relinquished By:		Date: 2-27-24	Time: 13:58 pm	Received By:		Date: 2-27-24	Time: 1358

Rev. Multiple Sample COC_20180502

1532 Universal City Blvd., Ste. 100, Universal City, Texas 78148
P (210) 340-0343 or (800) 880-4616 - F (210) 658-7903

Login at www.pcslab.net

Pollution Control Services
Universal City, Tx

Sample Log-In Checklist
DCN: SL-001, Rev. 1
Effective Date: 6/07/2022

Pollution Control Services

Sample Log-In Checklist

PCS Sample No(s) 752553 ~~752558~~ 752553 **COC No.** _____

Client/Company Name: Castroville **Checklist Completed by:** JAA

Sample Delivery to Lab Via:
Client Drop Off ✓ Commercial Carrier: Bus ___ UPS ___ Lone Star ___ FedEx ___ USPS ___
PCS Field Services: Collection/Pick Up ___ Other: _____

Sample Kit/Coolers
Sample Kit/Cooler? Yes ✓ No ___ Sample Kit/Cooler: Intact? Yes ✓ No ___
Custody Seals on Sample Kit/Cooler: Not Present ✓ If Present, Intact ___ Broken ___
Sample Containers Intact; Unbroken and Not Leaking? Yes ✓ No ___
Custody Seals on Sample Bottles: Not Present ✓ If Present, Intact ___ Broken ___
COC Present with Shipment or Delivery or Completed at Drop Off? Yes ✓ No ___
Has COC sample date/time and other pertinent information been provided by client/sampler? Yes: ✓ No: ___
Has COC been properly Signed when Received/Relinquished? Yes ✓ No ___
Does COC agree with Sample Bottle Information, Bottle Types, Preservation, etc.? Yes ✓ No ___
All Samples Received before Hold Time Expiration? Yes ✓ No ___
Sufficient Sample Volumes for Analysis Requested? Yes ✓ No ___
Zero Headspace in VOA Vial? Yes ___ No ___

Sample Preservation:
* ***Cooling:*** **Not Required** ✓ or **Required** _____
If cooling required, record temperature of submitted samples Observed/Corrected 20 / 20 °C
Is Ice Present in Sample Kit/Cooler? ___ Yes ✓ No Samples received same day as collected? ✓ Yes ___ No
Lab Thermometer Make and Serial Number: Vaughan 1807009583 Other: _____

Acid Preserved Sample - If present, is pH <2? **Yes** ___ **No** ___ ** ___H_2SO_4 ___HNO_3 ___H_3PO_4
Base Preserved Sample - If present, is pH >12? Yes ___ No ___ ___NaOH
Other Preservation: _____ If Present, Meets Requirements? Yes ___ No ___
Sample Preservations Checked by: _____ Date _____ Time _____
pH paper used to check sample preservation (PCS log #): _____ (HEM pH checked at analysis).
Samples Preserved/Adjusted by Lab:

Lab #	Parameters Preserved	Preservative Used	Log #

Adjusted by Tech/Analyst: _____ Date : _____ Time: _____

Client Notification/ Documentation for "No" Responses Above/ Discrepancies/ RevisionComments
Person Notified: _____ Contacted by: _____
Notified Date: _____ Time: _____
Method of Contact: At Drop Off: ___ Phone ___ Left Voice Mail ___ E-Mail ___ Fax ___
Unable to Contact ___ Authorized Laboratory to Proceed : _____ (Lab Director)
Regarding / Comments: _____

Actions taken to correct problems/discrepancies: _____

Receiving qualifier needed (*requires client notification above*) Temp. ___ Holding Time ___ Initails: _____
Receiving qualifier entered into LIMS at login Initial/Date: _____
Revision Comments: _____

CITY OF CASTROVILLE

CONSTRUCTION PLANS FOR

0.9 MGD WASTEWATER TREATMENT PLANT CAPACITY EXPANSION CONSTRUCTION SET #3 SUPPLY PACKAGE



VICINITY MAP
NOT TO SCALE

JUNE 2020
RECORD DRAWINGS

Mayor
JEFFERY S. GARDNER

Mayor Pro Tem
VICTOR ORTIZ JR.

Interim City Administrator
MARIE GELLES

Public Works Director
LAWRENCE L. HEINRICH

Council Members
JESUS "JESSE" MENDOZA
KYLE L. MCVAY
PHIL KING
ERIC CHERRY
VICTOR ORTIZ JR.

THE SEAL APPEARING ON THIS DOCUMENT WAS AUTHORIZED BY : TARLTON W. SMITH II P.E.
TEXAS NO: 92669 ON: 06/10/2016
ALTERATION OF A SEALED DOCUMENT WITHOUT PROPER NOTIFICATION OF THE RESPONSIBLE ENGINEER IS AN OFFENSE UNDER THE TEXAS ENGINEERING PRACTICE ACT.

THE SEAL APPEARING ON THIS DOCUMENT WAS AUTHORIZED BY : JOHNNY M. NEW P.E.
TEXAS NO: 96330 ON: 6/10/2016
ALTERATION OF A SEALED DOCUMENT WITHOUT PROPER NOTIFICATION OF THE RESPONSIBLE ENGINEER IS AN OFFENSE UNDER THE TEXAS ENGINEERING PRACTICE ACT.

THE SEAL THAT ORIGINALLY APPEARED ON THIS DOCUMENT WAS AUTHORIZED BY CORY C. GEE P.E.
TEXAS NO: 118862 ON: 06/10/2016
ALTERATION OF A SEALED DOCUMENT WITHOUT PROPER NOTIFICATION OF THE RESPONSIBLE ENGINEER IS AN OFFENSE UNDER THE TEXAS ENGINEERING PRACTICE ACT.

Freese and Nichols, Inc.
Texas Registered Engineering Firm F-2144

FREESE AND NICHOLS

4040 Broadway Street, Suite 600
San Antonio, Texas 78209-6350
Phone – (210) 298-3800
Fax – (210) 298-3801

FNI PROJECT NO. CVL14259

This Record Drawing is a combination of the sealed engineering contract drawings for this project, modified by information furnished by the contractor reflecting changes in the Project made during construction. The original sealed drawings are on file at the offices of FREESE AND NICHOLS, INC.
RECORD DRAWINGS PREPARED ON: 06/24/20

WASTEWATER TREATMENT PLANT CAPACITY EXPANSION

ACAD Rel. 18.0s (LMS Tech) User: MJ
Plotted by: Mark Jones - CORP/FNI LAYOUT: Layout1
05/02/2013 9:22:03 A.M. LTS: 1.00 PSLTS: 1 TWIST: 0.0

DRAWING INDEX

SEQ. NO.	SHT. NO.	DESCRIPTION
		GENERAL
1.		COVER
2.		G-1 – DRAWING INDEX
3.		G-2 – GENERAL NOTES
4.		G-3 – STANDARD SYMBOLS
5.		G-4 – HYDRAULIC PROFILE
6.		G-5 – EXISTING CLARIFIER OPERATION HYDRAULIC PROFILE
7.		G-6 – PROCESS FLOW DIAGRAM
		STRUCTURAL
8.		G-S1 – STRUCTURAL GENERAL NOTES #1
9.		G-S2 – STRUCTURAL GENERAL NOTES #2
		ARCHITECTURAL
10.		G-A1 – CODE DATA AND GENERAL INFORMATION
11.		G-A2 – OPENINGS SCHEDULE AND DETAILS
12.		G-A3 – BUILDING DETAILS I
13.		G-A4 – BUILDING DETAILS II AND PARTITION TYPES
		CIVIL
14.		C-1 – EXISTING PLANT LAYOUT 1 OF 2
15.		C-2 – EXISTING PLANT LAYOUT 2 OF 2
16.		C-3 – DEMOLITION PLAN 1 OF 2
17.		C-4 – DEMOLITION PLAN 2 OF 2
18.		C-5 – PROPOSED SITE LAYOUT 1 OF 2
19.		C-6 – PROPOSED SITE LAYOUT 2 OF 2
20.		C-7 – SITE PIPING PLAN 1 OF 3
21.		C-8 – SITE PIPING PLAN 2 OF 3
22.		C-9 – SITE PIPING PLAN 3 OF 3
23.		C-10 – SITE GRADING AND STAKING PLAN 1 OF 2
24.		C-11 – SITE GRADING AND STAKING PLAN 2 OF 2
25.		C-12 – EFFLUENT OUTFALL MODIFICATIONS
		HEADWORKS FACILITY
		MECHANICAL
26.		HW-M1 – TOP PLAN AND ELEVATION
27.		HW-M2 – ELEVATION AND SECTIONS
28.		HW-M3 – SECTION AND DETAILS
		STRUCTURAL
29.		HW-S1 – HEADWORKS FACILITY TOP & SECTIONAL PLANS
30.		HW-S2 – HEADWORKS FACILITY SECTIONAL PLAN
31.		HW-S3 – HEADWORKS FACILITY SECTIONS
32.		HW-S4 – HEADWORKS FACILITY STAIR SECTION AND DETAIL
33.		HS-S5 – HEADWORKS FACILITY SECTIONS AND DETAILS
		ACTIVATED SLUDGE (CARROUSEL BASIN)
		MECHANICAL
34.		AS-M1 – TOP PLAN AND SECTION
35.		AS-M2 – MISC. PLANS AND SECTIONS
36.		AS-M3 – MISC. PLANS AND SECTIONS
37.		AS-M4 – SECTIONS AND DETAILS
		STRUCTURAL
38.		AS-S1 – ACTIVATED SLUDGE (CARROUSEL BASIN) SECTIONAL AND TOP PLANS
39.		AS-S2 – ACTIVATED SLUDGE (CARROUSEL BASIN) ISOMETRIC AND SECTION
40.		AS-S3 – ACTIVATED SLUDGE (CARROUSEL BASIN) ENLARGED BASIN SECTIONAL PLAN
41.		AS-S4 – ACTIVATED SLUDGE (CARROUSEL BASIN) ENLARGED TOP PLAN
42.		AS-S5 – ACTIVATED SLUDGE (CARROUSEL BASIN) PLAN DETAILS
43.		AS-S6 – ACTIVATED SLUDGE (CARROUSEL BASIN) SECTIONS
44.		AS-S7 – ACTIVATED SLUDGE (CARROUSEL BASIN) SECTIONS
45.		AS-S8 – ACTIVATED SLUDGE (CARROUSEL BASIN) SECTIONS
46.		AS-S9 – ACTIVATED SLUDGE (CARROUSEL BASIN) ALUM INJECTION PLAN & SECTIONS
		PROPOSED SECONDARY CLARIFIER NO. 1
		MECHANICAL
47.		SC-M1 – PLAN VIEW
48.		SC-M2 – ILLUSTRATIVE SECTION VIEW
49.		SC-M3 – MISCELLANEOUS DETAILS
50.		SC-M4 – RAS PUMP STATION PLAN AND SECTION
		STRUCTURAL
51.		SC-S1 – STRUCTURAL DETAILS
52.		SC-S2 – MISCELLANEOUS STRUCTURAL DETAILS
		FILTERS
		MECHANICAL
53.		F-M1 – TOP PLAN, AND SECTIONS I
54.		F-M2 – TOP PLAN, AND SECTIONS II
55.		F-M3 – DETAILS
		STRUCTURAL
56.		F-S1 – FILTERS PLAN AND SECTIONS
57.		F-S2 – FILTERS PLAN AND SECTIONS
		CHLORINE DISINFECTION
		MECHANICAL
58.		CD-M1 – CHLORINE DISINFECTION – CONTACT BASIN DEMOLITION PLAN
59.		CD-M2 – CHLORINE DISINFECTION – CONTACT BASIN PLAN VIEW
60.		CD-M3 – CHLORINE DISINFECTION – CONTACT BASIN SECTION AND EFFLUENT BOX DETAILS
61.		CD-M4 – CHLORINE DISINFECTION – CHLORINE DISINFECTION – UW SYSTEM PLAN AND ELEVATION
		STRUCTURAL
62.		CD-S1 – CHLORINE DISINFECTION – CHLORINE CONTACT BASIN PLAN
63.		CD-S2 – CHLORINE DISINFECTION – CHLORINE CONTACT BASIN SECTION
		PLANT DRAIN LIFT STATION
		MECHANICAL
64.		PD-M1 – PLAN VIEW AND SECTION
		STRUCTURAL
65.		PD-S1 – SECTION AND DETAILS
		SOLIDS HANDLING
		MECHANICAL
66.		SH-M1 – SOLIDS HANDLING – SLUDGE HOLDING DEMOLITION – TOP PLAN AND SECTION
67.		SH-M2 – SOLIDS HANDLING – EFFLUENT BOX DEMOLITION AND IMPROVEMENTS
68.		SH-M3 – SOLIDS HANDLING – SLUDGE HOLDING IMPROVEMENTS – TOP PLAN AND SECTION
69.		SH-M4 – SOLIDS HANDLING – SLUDGE FEED PUMPS PLAN AND SECTION
70.		SH-M5 – SOLIDS HANDLING – SCREW PRESS PLAN
71.		SH-M6 – SOLIDS HANDLING – SCREW PRESS ELEVATION
		STRUCTURAL
72.		SH-S1 – SOLIDS HANDLING – SCREW PRESS FOUNDATION AND PLATFORM PLANS
73.		SH-S1 – SOLIDS HANDLING – SCREW PRESS – BUILDING SECTIONS
74.		SH-S3 – SOLIDS HANDLING – SCREW PRESS – FOUNDATION SECTIONS AND DETAILS
		CHLORINE BUILDING
		MECHANICAL
75.		CH-M1 – ELEVATIONS AND DETAILS
		STRUCTURAL
76.		CH-S1 – CHLORINE BUILDING – PLAN AND SECTION
		ARCHITECTURAL
77.		CH-A1 – PLANS, ELEVATIONS AND SECTION
		ADMINISTRATION/ELECTRICAL BUILDING
		ARCHITECTURAL
78.		AD-A1 – FLOOR, ROOF AND CEILING PLANS
79.		AD-A2 – ENLARGED PLAN AND INTERIOR ELEVATIONS
80.		AD-A3 – ELEVATIONS AND SECTION
		STRUCTURAL
81.		AD-S1 – FOUNDATION PLAN AND SECTIONS
82.		AD-S2 – CMU WALL LAYOUT & REINFORCING PLAN
83.		AD-S3 – ROOF FRAMING PLAN AND SECTIONS
		PLUMBING
84.		P-1 – LEGEND, SCHEDULES AND GENERAL NOTES
85.		P-2 – ADMIN-ELEC BUILDING FLOOR PLAN
86.		P-3 – CHLORINE BUILDING FLOOR PLAN
87.		P-4 – RISER DIGRAMS
		H.V.A.C.
88.		M-1 – LEGEND
89.		M-2 – BUILDING FLOOR PLAN
90.		M-3 – CHLORINE BUILDING FLOOR PLAN
91.		M-4 – SCHEDULES AND DETAILS
		STANDARD DETAILS
92.		SD-1 – STANDARD MECHANICAL DETAILS #1
93.		SD-2 – STANDARD MECHANICAL DETAILS #2
94.		SD-3 – STANDARD MECHANICAL DETAILS #3
95.		SD-4 – STANDARD MECHANICAL DETAILS #4
96.		SD-5 – STANDARD MECHANICAL DETAILS #5
97.		SD-6 – STANDARD MECHANICAL DETAILS #6
98.		SD-7 – STANDARD MECHANICAL DETAILS #7
99.		SD-8 – STANDARD MECHANICAL DETAILS #8
100.		SD-9 – STANDARD MECHANICAL DETAILS #9
101.		SD-10 – STANDARD MECHANICAL DETAILS #10
102.		SD-11 – STANDARD MECHANICAL DETAILS #11
103.		SD-12 – STANDARD MECHANICAL DETAILS #12
104.		SD-13 – STANDARD MECHANICAL DETAILS #13
105.		SD-14 – STANDARD MECHANICAL DETAILS #14
106.		SD-15 – STANDARD MECHANICAL DETAILS #15
107.		SD-16 – STANDARD MECHANICAL DETAILS #16
108.		SD-17 – STANDARD MECHANICAL DETAILS #17
109.		SD-18 – STANDARD MECHANICAL DETAILS #18
110.		SD-19 – STANDARD MECHANICAL DETAILS #19
111.		SD-20 – STANDARD STRUCTURAL DETAILS #1
112.		SD-21 – STANDARD STRUCTURAL DETAILS #2
113.		SD-22 – STANDARD STRUCTURAL DETAILS #3
114.		SD-23 – STANDARD STRUCTURAL DETAILS #4
115.		SD-24 – STANDARD STRUCTURAL DETAILS #5
		PROCESS & INSTRUMENTATION
116.		PI-1 – LEGEND I
117.		PI-2 – LEGEND II
118.		PI-3 – P&ID NO. 1
119.		PI-4 – P&ID NO. 2
120.		PI-5 – P&ID NO. 3
121.		PI-6 – P&ID NO. 4
		ELECTRICAL
122.		E-1 – LEGEND I
123.		E-2 – LEGEND II
124.		E-3 – DEMOLITION SITE PLAN
125.		E-4 – SITE PLAN
126.		E-5 – HEADWORKS
127.		E-6 – BNR BASIN POWER AND CONTROL PLAN
128.		E-7 – BNR BASINS LIGHTING AND RECEPTACLES PLAN
129.		E-8 – CLARIFIER
130.		E-9 – RAS PUMP STATION
131.		E-10 – FILTER POWER
132.		E-11 – CHLORINE CONTACT CHAMBER
133.		E-12 – CHEMICAL BUILDING
134.		E-13 – PLANT WATER NON-POTABLE SYSTEM
135.		E-14 – ADMINISTRATION BUILDING POWER PLAN
136.		E-15 – ADMINISTRATION BUILDING LIGHTING AND RECEPTACLE PLAN
137.		E-16 – PLANT DRAIN PUMP STATION
138.		E-17 – SLUDGE HOLDING TANK
139.		E-18 – SLUDGE PUMP STATION
140.		E-19 – SLUDGE HANDLING POWER
141.		E-20 – LIGHTING AND RECEPTACLES
142.		E-21 – ONE-LINE DIAGRAM I
143.		E-22 – ONE-LINE DIAGRAM II
144.		E-23 – ONE-LINE DIAGRAM III
145.		E-24 – CONTROL SCHEMATICS I
146.		E-25 – CONTROL SCHEMATICS II
147.		E-26 – PANELBOARD SCHEDULES I
148.		E-27 – PANELBOARD SCHEDULES II
149.		E-28 – INTERCONNECTION DIAGRAM I
150.		E-29 – INTERCONNECTION DIAGRAM II
151.		E-30 – DETAILS I
152.		E-31 – DETAILS II
153.		E-32 – DUCT BANK DETAILS I
154.		E-33 – DUCT BANK DETAILS II

This Record Drawing is a combination of the sealed engineering contract drawings for this project, modified by information furnished by the contractor reflecting changes in the Project made during construction. The original sealed drawings are on file at the offices of FREESE AND NICHOLS, INC.
RECORD DRAWINGS PREPARED ON: 06/24/20

LEGEND:

BID PACKAGE 2
BID PACKAGE 3

Freese and Nichols, Inc.
Texas Registered Engineering Firm F-2144

THE SEAL APPEARING ON THIS DOCUMENT WAS AUTHORIZED BY CORY C. GEE, 06/24/2020.
ALTERATION OF A SEALED DOCUMENT WITHOUT PROPER AUTHORIZATION AND ADDITIONAL SEAL IS A VIOLATION OF THE LAW FOR ENGINEERS UNDER THE TEXAS ENGINEERING PRACTICE ACT.

FREESE NICHOLS
4040 Broadway, Street, Suite 600
San Antonio, Texas 78209-6350
Phone - (210) 298-8300
Fax - (210) 298-3801
Web - www.freese.com

CITY OF CASTROVILLE

WWTP CAPACITY EXPANSION PROJECT

GENERAL

DRAWING INDEX BP 3

NO.	ISSUE	BY	DATE	FILE NAME
0	RECORD DRAWING	CCG	06/24/20	GN-ALL-INDEX-BP-3.dwg

VERIFY SCALE Bar is one inch on original drawing. If not one inch on this sheet, adjust scale.
0 1"

FAN JOB NO.	CVL14259
DATE	6/10/16
DESIGNED	CCG
DRAWN	DDH
CHECKED	TWS
REVISED	.

SHEET G-1

SEQ. .

ACAD Rel: 21.0s (LMS Tech)
Filename: N:\STANDARD\GN-ALL-INDEX-BP-3.dwg
Last Saved: 6/24/2020 4:02 PM Saved By: 90119

Plot Date: 6/24/2020 4:03 PM Plot By: 90119 Filename: N:\STANDARD\GN-ALL-INDEX-BP-3.dwg

GENERAL NOTES

1. THE FOLLOWING NOTES ARE GENERAL AND APPLY TO ALL SHEETS OF THESE CONTRACT DOCUMENTS AS IF THEY WERE WRITTEN IN THEIR ENTIRETY ON EACH SHEET.

2. EXISTING STRUCTURES, UTILITIES AND PIPING ARE SHOWN FROM AVAILABLE RECORDS AT THE TIME THIS PLAN SET WAS DEVELOPED. IT IS THE CONTRACTOR'S RESPONSIBILITY TO DETERMINE AND VERIFY THE LOCATION AND DEPTH OF ALL EXISTING STRUCTURES, UTILITIES AND PIPING WITHIN THE CONSTRUCTION AREA PRIOR TO THE BEGINNING OF CONSTRUCTION. ANY DAMAGE TO THE EXISTING STRUCTURES, UTILITIES AND PIPING THAT IS NOT RELATED TO THE NEW CONSTRUCTION SHALL BE RESTORED BY THE CONTRACTOR AT NO ADDITIONAL COST TO THE OWNER.

3. PRIOR TO FABRICATION OF NEW PIPING AND EXCAVATION FOR NEW STRUCTURES, ELECTRICAL CONDUIT, NEW PIPING AND/OR OTHER PROPOSED UTILITIES, CONTRACTOR SHALL BE RESPONSIBLE FOR VERIFYING THE LOCATION OF ALL EXISTING PIPING AND UTILITIES IN THE CONSTRUCTION AREA. AT TIE-IN CONNECTION LOCATIONS, VERIFY EXISTING CONDITIONS AND ELEVATIONS. BEFORE FABRICATION OF NEW PIPING. THE CONTRACTOR SHALL INCLUDE IN THE BID COST FOR TEMPORARILY RELOCATING EXISTING UTILITIES AS REQUIRED FOR CONSTRUCTION OF PROPOSED ITEMS AND REINSTALLING THEM.

4. ALL PIPELINES 12" AND LARGER SHALL HAVE A MINIMUM COVER OF 36". PIPE SMALLER THAN 12" SHALL HAVE A MINIMUM COVER OF 30" (UNLESS NOTED OTHERWISE). PIPES SHALL BE ROUTED AS SHOWN UNLESS MINOR REVISIONS ARE NECESSARY TO MISS EXISTING PIPES, STRUCTURES, ETC. CONTRACTOR SHALL BE RESPONSIBLE FOR FURNISHING ALL FITTINGS AND ADAPTERS REQUIRED TO MAKE THE ROUTING CHANGES. CONTRACTOR SHALL INCLUDE COST FOR THIS IN THE BID.

5. CONTRACTOR SHALL MAKE CONNECTIONS TO EXISTING PIPE, STRUCTURES, EQUIPMENT, ETC. AS REQUIRED AND SHALL PROVIDE ALL FITTINGS, ADAPTERS AND APPURTENANCES REQUIRED TO MAKE THE CONNECTIONS. PROVIDE ALL SUPPORTS REQUIRED FOR A RIGID INSTALLATION AND TO HAVE A COMPLETE AND WORKING SYSTEM.

6. PROVIDE RESTRAINED JOINTS FOR PRESSURIZED PIPE FITTINGS AND THRUST BLOCKING FOR GRAVITY PIPE FITTINGS IN ACCORDANCE WITH THE STANDARD/TYPICAL DETAILS AND SPECIFICATIONS.

7. PROVIDE RESTRAINED JOINTS OR VERTICAL BLOCKING AT ALL VERTICAL BENDS. BLOCKING SHALL BE TIE-DOWN BLOCKING.

8. DO NOT EXCEED 75% OF MANUFACTURER'S RECOMMENDED MAXIMUM DEFLECTION FOR PIPE JOINTS.

9. COAT BURIED FITTINGS, VALVES, BOLTS, NUTS, GASKETS, AND APPURTENANCES WITH AN EPOXY OR BITUMASTIC COATING. WRAP VALVES, D.I. PIPE (IF USED), AND PLUGS IN POLYETHYLENE ENCASEMENT.

10. PIPES DESIGNATED TO BE DEMOLISHED MAY BE COMPLETELY REMOVED, OR MAY BE CUT AND ALL OPEN ENDS PLUGGED OR CAPPED, UNLESS OTHERWISE DIRECTED. PIPES ABANDONED IN PLACE SHALL BE CAPPED WITH EITHER CONCRETE, BLIND FLANGE OR M.J. PLUG. ABANDONED PIPING UNDER NEW ROADS AND STRUCTURES SHALL BE COMPLETELY REMOVED. BACKFILL TRENCH WITH LEAN CONC. OR STRUCTURAL EARTH FILL AND COMPACT IN ACCORDANCE WITH SPECIFICATIONS. PIPES TO BE ABANDONED IN PLACE SHALL BE EMPTIED OF ALL CONTENTS.

11. CONTRACTOR SHALL VERIFY THAT PIPING SHOWN TO BE ABANDONED OR AS ABANDONED PREVIOUSLY IS NO LONGER IN SERVICE. LINES IN SERVICE SHALL BE MAINTAINED UNTIL NO LONGER REQUIRED BY THE OWNER.

12. EXISTING PIPES ABANDONED IN PLACE OR TO BE REMOVED MAY NOT BE SHOWN. WHERE PIPING TO BE ABANDONED MUST REMAIN IN SERVICE UNTIL COMPLETION OF OTHER PHASE WORK, AND IT CONFLICTS WITH NEW PIPING, TEMPORARILY RELOCATE TO MAINTAIN SERVICE. CONTRACTOR SHALL PROVIDE ALL NECESSARY APPURTENANCES FOR THE TEMPORARY RELOCATION.

13. CONTRACTOR SHALL REROUTE THE EXISTING PIPING IF REQUIRED TO AVOID THE PROPOSED STRUCTURES. THE EXISTING PIPE SHALL REMAIN IN SERVICE UNTIL NEW PIPING AND FACILITIES ARE READY TO BE PLACED INTO SERVICE. DOWNTIME SHALL BE A MAXIMUM OF 2 HOURS UNLESS SPECIFIED OTHERWISE IN THE CONTRACT DOCUMENTS OR SHOWN OTHERWISE. ALL REMAINING PIPING, WHETHER IN SERVICE OR ABANDONED, SHALL BE NOTED ON THE RECORD DRAWINGS.

14. PROTECT MJ HARDWARE FROM BEING ENCASED OR COVERED WITH CONCRETE ENCASEMENT DURING INSTALLATION OF CONCRETE THRUST BLOCKS.

15. ALL PENETRATIONS (EXISTING AND PROPOSED) OF THE WALLS SHALL BE SEALED PER TYPICAL/STANDARD DETAILS OR AS DIRECTED BY ENGINEER.

16. THE CONTRACTOR SHALL TAKE SPECIAL PRECAUTIONS IN THE VICINITY OF ANY OVERHEAD ELECTRIC LINES. CONTRACTOR SHALL ABIDE BY NATIONAL ELECTRIC CODE AND ANY REQUIREMENT BY OWNER OF ELECTRIC LINES.

17. CONTROL POINTS AND BENCHMARKS ARE LOCATED ON SITE AS INDICATED ON SHEETS C-1 & C-2.

18. PROVIDE, INSTALL AND REMOVE ALL SHEETING/SHORING REQUIRED TO PROTECT ALL EXISTING STRUCTURES, PIPES AND FACILITIES.

19. AT LOCATIONS WHERE NEW PIPES, FITTINGS AND/OR STRUCTURES ARE ADJACENT TO EXIST. PIPES, FITTINGS, AND /OR STRUCTURES EXISTING THRUST BLOCKING SHALL BE REMOVED AND REPLACED.

20. WHERE EXIST. PIPES, VALVES ETC. ARE NOTED FOR REUSE : ALLOW OWNER TO EXAMINE ITEMS PRIOR TO REINSTALLING.

21. ON ALL STRUCTURES SHOWN TO BE DEMOLISHED : SALVAGE ITEMS FOR OWNER AS INDICATED ON PLANS OR SPECIFICATIONS. REMOVE AND DISPOSE OF ALL OTHER MATERIALS, PIPE AND COMPONENTS WITHIN THE STRUCTURE INCLUDING THE CONC. STRUCTURE AND ANY CONC. BACKFILL ASSOCIATED WITH STRUCTURE. ALL COMPONENTS MAY NOT BE SHOWN. FILL EXCAVATION WITH COMPACTED EARTH TO MATCH SURROUNDING GRADE AND MAINTAIN EXISTING DRAINAGE PATTERN.

22. CONTRACTOR SHALL COMPLETELY REMOVE AND PROPERLY DISPOSE OF ALL STRUCTURES DESIGNATED FOR DEMOLITION, AS SOON AS POSSIBLE.

23. AT CONTRACTOR'S OPTION, DR-18, C900 AND C905 PVC PIPE MAY BE USED IN LIEU OF DUCTILE IRON PIPE FOR PROCESS PIPING 16" AND SMALLER FOR BURIED INSTALLATIONS. EXPOSED PIPE SHALL BE AS DESIGNATED. PIPING UNDER STRUCTURES SHALL BE DUCTILE IRON OR AS DESIGNATED.

24. BEFORE BEGINNING CONSTRUCTION NOTIFY ENGINEER OF ANY DISCREPANCIES OR CONFLICTS FOUND IN DRAWINGS AND/OR FIELD DIMENSIONS.

25. CONTRACTOR SHALL VERIFY LOCATION OF ALL ARCHITECTURAL, MECHANICAL AND ELECTRICAL ITEMS BEFORE PLACING ANY STRUCTURAL STEEL OR CONCRETE. STRUCTURAL DIMENSIONS AND OPENINGS CONTROLLED BY ARCHITECTURAL, MECHANICAL OR ELECTRICAL EQUIPMENT SHALL BE VERIFIED BY THE CONTRACTOR PRIOR TO CONSTRUCTION.

26. STRUCTURES HAVE BEEN DESIGNED FOR OPERATIONAL LOADS ON COMPLETED STRUCTURES. DURING CONSTRUCTION, STRUCTURES SHALL BE PROTECTED BY BRACING OR WHATEVER MEANS REQUIRED WHEREVER EXCESSIVE CONSTRUCTION LOADS OCCUR.

27. MECHANICAL AND ELECTRICAL EQUIPMENT SUPPORTS, ANCHORAGES, OPENING, RECESSES AND REVEALS NOT SHOWN ON THE STRUCTURAL DRAWINGS BUT REQUIRED BY OTHER CONTRACT DRAWINGS SHALL BE PROVIDED PRIOR TO CASTING CONCRETE.

28. THE CONTRACTOR SHALL CONTACT THE PROPER UTILITY REPRESENTATIVE FOR QUESTIONS AND/OR COORDINATION OF ANY EXISTING UTILITIES.

29. ABOVE GRADE PROCESS PIPING SHALL BE FLANGED PIPE. AIR PIPING SHALL BE AS SHOWN AND/OR SPECIFIED. BURIED PIPING SHALL BE MECHANICAL JOINT, PUSH-ON GASKETED OR AS SHOWN.

30. ALL PIPE WALL PENETRATIONS SHALL TYPICALLY BE A 342; TYPE D, E, OR F UNLESS SPECIFICALLY DESIGNATED OTHERWISE ON THE DRAWINGS.

31. ALL PIPE SHALL HAVE A FLEXIBLE COUPLING/DRESSER COUPLING AT LOCATIONS WHERE IT LEAVES A STRUCTURE AND/ OR ENTERS THE GROUND, WHETHER OR NOT SHOWN ON THE DRAWINGS.

32. ALL EXPOSED MANUAL OPERATED VALVES SHALL HAVE EITHER HANDWHEEL OR LEVERS. VALVES FIVE FEET ABOVE WALK (FINISH FLOOR) AREA SHALL HAVE CHAIN OPERATORS.

33. ALL FABRICATED GATE OPERATORS SHALL BE PER THE SCHEDULE IN SPECIFICATION SECTION 40 05 50.

34. ALL NEW UNISTRUT, ANCHORS, SUPPORT SYSTEMS AND FASTENING HARDWARE SHALL BE 304 OR 316 STAINLESS STEEL; UNLESS IN THE CHLORINE CONTACT BASIN. ALL NEW UNISTRUT ANCHORS, SUPPORT SYSTEMS AND FASTENING HARDWARE IN THE CHLORINE CONTACT BASIN SHALL BE 316 STAINLESS STEEL ONLY.

35. EXISTING CONTOURS IN PLANS ARE SHOWN FOR TERRAIN RELIEF ONLY. ALL ELEVATIONS SHALL BE VERIFIED.

36. EXCAVATION ADJACENT TO OR CROSSING EXISTING UTILITIES THAT ARE TO REMAIN, SHALL BE PERFORMED BY HAND AND IN SUCH A MANNER AS TO AVOID DAMAGE TO EXISTING UTILITIES.

37. ALL DEMOLISHED PIPING AND APPURTENANCES, CONDUITS, ELECTRIC WIRING AND EQUIPMENT ARE SUBJECT TO SALVAGE BY THE OWNER. OWNER WILL DECIDE IF THESE ITEMS SHALL BE DISPOSED OF BY THE CONTRACTOR. ALL DISPOSED EQUIPMENT WILL BE REMOVED FROM THE SITE BY THE CONTRACTOR.

38. ANY EXISTING PIPING THAT IS AFFECTED BY NEW CONSTRUCTION OR NEW PIPING INSTALLATION, UNLESS DEMOLISHED AND REMOVED, OR ABANDONED IN PLACE, SHALL BE RETURNED TO ORIGINAL OR BETTER CONDITION AT NO ADDITIONAL COST TO THE OWNER. PIPING REPAIR SHALL INCLUDE CONSIDERATION FOR BACKFILL, ENCASEMENT, SUPPORTS, RESTRAINTS, FITTINGS, VALVES, HEAT TRACINGS, INSULATION AND ANY TYPICAL OR SPECIAL COATINGS THAT ARE APPLIED TO THE INTERIOR AND/ OR EXTERIOR OF THE PIPING AND IT'S APPURTENANCES.

39. IN LIEU OF CONTRACTOR PROVIDING SUPPORT FOR EXISTING UTILITIES, CONTRACTOR MAY TEMPORARILY RELOCATE THEM AWAY FROM THE WORK AREA AND THEN REINSTALL OR DEMOLISH THEM AS REQUIRED ONCE NEW PIPING AND FACILITIES CONSTRUCTION IS COMPLETE AND PLACED IN SERVICE. CONTRACTOR SHALL SUBMIT A PLAN TO THE ENGINEER FOR REVIEW AND APPROVAL OF ANY PROPOSED TEMPORARY UTILITY RELOCATIONS AND SHALL BE ACCOMPLISHED AT NO ADDITIONAL COST TO THE OWNER AND ASSOCIATED REQUIRED SHUTDOWNS SHALL ADHERE TO SPECIFIED MAXIMUM ALLOWABLE DURATIONS.

40. UNLOADING AND STORAGE OF EQUIPMENT SHALL BE THE RESPONSIBILITY OF THE CONTRACTOR WHO SHALL INSPECT ALL EQUIPMENT FOR APPARENT DAMAGE. EQUIPMENT WHICH IS FOUND TO BE DAMAGED WILL NOT BE ACCEPTED UNTIL PROPERLY REPAIRED OR REPLACED BY THE VENDOR. ALL MAJOR EQUIPMENT INCLUDING, BUT NOT LIMITED TO FILTER EQUIPMENT, PUMPS, VARIABLE FREQUENCY DRIVES (VFD's), MOTORS AND ACTUATORS SHALL BE STORED INDOORS. WHEN THIS EQUIPMENT IS STORED INDOORS, IT SHALL NEVER BE IN DIRECT SUNLIGHT, AND THE INDOOR TEMPERATURE SHALL BE MAINTAINED AT A LEVEL SATISFACTORY TO THE VENDOR. THE CONTRACTOR IS RESPONSIBLE FOR PROVIDING THE INDOOR STORAGE FACILITY OR ENCLOSURE

41. THE CONTRACTOR SHALL TAKE SPECIAL PRECAUTIONS IN THE VICINITY OF ANY OVERHEAD ELECTRIC LINES. CONTRACTOR SHALL ABIDE BY NATIONAL ELECTRIC CODE AND ANY REQUIREMENT BY OWNER OF ELECTRIC LINES.

42. CONTRACTOR SHALL COMPLY WITH ALL STEPS AND SEQUENCES AS DESCRIBED IN SECTION 01 35 00 SPECIAL PROCEDURES.

43. CONTRACTOR SHALL MAINTAIN SUITABLE CONSTRUCTION ACCESS FOR THE ENGINEER AND THE CITY OF CASTROVILLE STAFF AT ALL TIMES DURING CONSTRUCTION.

44. THIS PROJECT IS SUBJECT TO THE AMERICAN IRON AND STEEL (AIS) REQUIREMENTS OF SECTION 608 OF THE FEDERAL WATER POLLUTION CONTROL ACT. ALL IRON AND STEEL PRODUCTS FOR CONSTRUCTION, ALTERATION, MAINTENANCE, OR REPAIRS INCORPORATED IN THESE PLANS MUST BE PRODUCED IN THE UNITED STATES

45. PER THE FINDING OF NO SIGNIFICANT IMPACT ISSUED ON MAY 11, 2016, THE PROJECT ACTIVITIES MUST COMPLY WITH THE STANDARD EMERGENCY DISCOVERY CONDITIONS FOR THREATENED AND ENDANGERED SPECIES INCLUDED IN TWDB FORM 0550 IN THE CONTRACT DOCUMENTS.

1

46. PER THE FINDINGS OF NO SIGNIFICANT IMPACT ISSUED ON MAY 11, 2016, THE PROJECT ACTIVITIES MUST COMPLY WITH THE STANDARD EMERGENCY DISCOVERY CONDITIONS FOR CULTURAL RESOURCES INCLUDED IN TWDB FORM 0550 IN THE CONTRACT DOCUMENTS.

This Record Drawing is a combination of the sealed engineering contract drawings for this project, modified by information furnished by the contractor reflecting changes in the Project made during construction. The original sealed drawings are on file at the offices of
FREESE AND NICHOLS, INC.
RECORD DRAWINGS PREPARED ON:
06/24/20

ISSUED FOR CONSTRUCTION
ON 11/16/2016

Freese and Nichols, Inc.
Texas Registered Engineering Firm F-2144

THE SEAL APPEARING ON THIS DOCUMENT WAS AUTHORIZED BY CORY C. GEE 120106
ALTERATION OF A SEALED DOCUMENT WITHOUT PROPER AUTHORIZATION AND ADDITIONAL SEAL OF THE ENGINEER IS A VIOLATION OF THE LAW AS SET FORTH IN THE TEXAS ENGINEERING PRACTICE ACT.

FREESE NICHOLS
4040 Broadway Street, Suite 600
San Antonio, Texas 78209-6350
Phone - (210) 824-3000
Fax - (210) 286-7901
Web - www.freese.com

CITY OF CASTROVILLE
WWTP CAPACITY EXPANSION PROJECT
GENERAL
GENERAL NOTES

NO.	ISSUE	BY	DATE
	RECORD DRAWING	CCG	06/24/20
2	ISSUED FOR CONSTRUCTION	CCG	11/16/16
1	ADDENDUM NO. 3	SDC	7/20/16

Bar is one inch on original drawing. If not one inch on this sheet, adjust scale.
VERIFY SCALE 0 1"

F&N JOB NO. CVL14259
DATE 6/10/16
DESIGNED CCG
DRAWN DDH
REVISED -
CHECKED TWS
FILE NAME GN-ALL-NOTES.dwg

SHEET G-2
SEQ. 3

ACAD Rel: 21.0s (LMS Tech)
Filename: N:\STANDARD\GN-ALL-NOTES.dwg
Last Saved: 10/9/2019 11:10 AM Saved By: 03576
Plot Date: 6/18/2020 4:47 PM Plot By: 90119 Filename: N:\STANDARD\GN-ALL-NOTES.dwg

SOLENOID OPERATED PUMP CONTROL VALVE

KNIFE GATE

SLIDE GATE

GATE VALVE

GLOBE VALVE

BALL VALVE

CHECK VALVE

PLUG VALVE

BUTTERFLY VALVE

NEEDLE VALVE

THREE-WAY VALVE

PINCH VALVE

SELF ACTUATING PRESSURE REGULATING VALVE

PRESSURE RELIEF VALVE

BACK PRESSURE VALVE

BACK PRESSURE/ANTI SIPHON VALVE

SPRING LOADED RELIEF VALVE

SOLENOID OPERATED VALVE

MOTOR OPERATED VALVE

MUD VALVE

MOTOR-ARROW DENOTES VARIABLE SPEED

MOTOR

MAGNETIC FLOW METER

THERMOMETER

PULSATION DAMPER ASSEMBLY

PRESSURE GAUGE

EXPANSION CHAMBER ASSEMBLY

UTILITY STATION

FIRE EXTINGUISHER

HOISTING HOOK

DRAIN

CALIBRATION CHAMBER

TEMPERATURE INDICATOR

PRESSURE DIFFERENTIAL INDICATOR

CHEMICAL FEED POINT

AIR RELEASE VALVE

CHOPPER

HOSE PUMP

CENTRIFUGAL PUMP CONSTANT SPEED

CENTRIFUGAL PUMP VARIABLE SPEED

BLOWER

VERTICAL TURBINE PUMP

PROGRESSING CAVITY PUMP

METERING PUMP

MIXER

FLOATS

HOSE BIB

Y-STRAINER

QUICK CONNECTOR

REDUCER OR INCREASER

BLIND FLANGE, CAP, OR PLUG

UNION

HOSE BIBB

CLEAN OUT

WATER SURFACE ELEVATION

FIRE HYDRANT

LIGHTING STANDARD

MANHOLE

WATER STOP

FLOW ARROW

TYPE

PRESSURE SWITCH

STRAINER

FLEXIBLE COUPLING

PIPE COUPLING

RESTRAINED EXPANSION JOINT

DIRECTION OF FLOW

EXPANSION JOINT

EXPANSION JOINT

GAS FILTER

VENT

SCREEN

EJECTOR

PRIMARY ELEMENT

VENTURI FLOWMETER

SONIC

TELESCOPING VALVE

UTILITY STATION

AERATOR

CL-2

DRAIN

NEW EQUIPMENT, PIPING, OR STRUCTURES

FUTURE EQUIPMENT, PIPING, OR STRUCTURES

EXISTING EQUIPMENT, PIPING, OR STRUCTURES

ITEMS TO BE DEMOLISHED OR ABANDONED IN PLACE

CENTERLINE

BREAK LINE

HANDRAIL

FENCE

EXISTING GRADE CONTOUR

FINISH GRADE CONTOUR

SLOPE (3 HORIZ. TO 1 VERT.)

GAS

ELECTRICAL POWER

OVERHEAD ELECTRICAL LINE

CONCRETE - SECTION

SAND OR GROUT - SECTION

CHECKERED PLATE

GRATING SPAN

OPENING OR DEPRESSION IN SLAB OR WALL

FLEXIBLE BASE

HEAVY DUTY FLEXIBLE BASE

GATE/VALVE INDEX

CODE	DESCRIPTION
TYPE OF OPERATOR	
E	ELECTRIC
EH	ELECTRIC HYDRAULIC
EZ	ELECTRIC WITH POSITIONER
H	HYDRAULIC
P	PNEUMATIC
PZ	PNEUMATIC WITH POSITIONER
M	MANUAL

CODE	DESCRIPTION
TYPE OF GATE/VALVE	
ARV	SEWAGE AIR RELEASE VALVE
AVV	SEWAGE AIR AND VACUUM VALVE
BFP	BLACK FLOW PREVENTER
BLV	BALL VALVE
BUV	BUTTERFLY VALVE
CAV	COMBINATION AIR VALVE
CKV	CHECK VALVE
DBV	DUCKBILL VALVE
EVO	ELECTRIC VALVE OPERATOR
FLC	FLEXIBLE COUPLING
GAT	GATE
GAV	GATE VALVE
HCS	HYDRAULIC CHECK VALVE
KGV	KNIFE GATE VALVE
MOV	MOTOR OPERATED VALVE
PGV	PLUG VALVE
PNV	PINCH VALVE
PRV	PRESSURE RELEASE VALVE
PVO	PNEUMATIC VALVE OPERATOR
QDV	QUICK DISCONNECT VALVE
SGV	SLUICE GATE/SLIDE GATE VALVE
SRV	SURGE RELIEF VALVE
TSV	TELESCOPING VALVE
VLV	VALVE
VSD	VARIABLE SPEED DRIVE

PROCESS FLOW STREAM - INDEX

PROCESS CODE	PRODUCT - SERVICE
ALP	AIR, LOW PRESSURE
AL	ALUM
BYP	BYPASS
CLG	CHLORINE GAS (PRESSURE)
CLL	CHLORINE LIQUID
CLS	CHLORINE SOLUTION
CLV	CHLORINE GAS VACUUM
D	DRAIN
DEC	DECANT
DP	DRAIN (PUMPED)
EQR	EQUALIZATION RETURN
FA	FOUL AIR
FE	FINAL EFFLUENT
FM	FORCE MAIN
ML	MIXED LIQUOR
OF	OVERFLOW
P	POLYMER
PE	PRIMARY EFFLUENT
PW	POTABLE WATER
RAS	RETURN ACTIVATED SLUDGE
RS	RAW SEWAGE
RW	REUSE WATER
SAM	SAMPLE LINE
SCM	SCUM
SDG	SULFUR DIOXIDE GAS
SDV	SULFER DIOXIDE VACUUM
SE	SECONDARY EFFLUENT
SEP	SEPTAGE
SFR	SLUDGE FILTRATE RETURN
SL	SLUDGE
SPD	SUMP PUMP DISCHARGE
SS	SANITARY SEWER
SUP	SUPERNATENT
UW	UTILITY WATER
WAS	WASTE ACTIVATED SLUDGE
WW	WASH WATER

PIPING MATERIAL INDEX

DESCRIPTION	CODE
BLACK STEEL PIPE	BS
PRESTRESSED CONCRETE CYL PIPE (C301)	PCC
CAST IRON PIPE	CI
DUCTILE IRON PIPE	DI
POLYVINYL CHLORIDE PIPE	PVC
STEEL PIPE	S
STAINLESS STEEL PIPE	SS
POLYETHYLENE PIPE	PE
FIBER REINFORCED PLASTIC	FRP
BAR WRAPPED CONC. CYL PIPE (C-303)	RCC
UNKNOWN MATERIAL	UNK

GENERAL NOTE:

1. THIS IS A STANDARD LEGEND THEREFORE, NOT ALL OF THIS INFORMATION MAY BE USED ON THIS PROJECT.

STANDARD DRAFTING SYMBOLS

MCC
102
ROOM IDENTIFICATION
ROOM NUMBER

342
TYPE B
352
or
STANDARD DETAIL NUMBER - Example (Detail Located in Standard Detail Dwgs - See Index)

1
XXX
DETAIL DESIGNATION
SHEET NUMBER WHERE DRAWN

CIRCLED AREA OF DETAIL (ENLARGED PLAN)

OR
X
XXX
DIRECTION OF SECTION CUT
SECTION NUMBER
SHEET NUMBER WHERE DRAWN

XX
XX
SCHEDULE DOOR TYPE
NUMERICAL IDENTIFICATION

EXPLANATION OF DESIGNATION PIPE

8 - PW - DI

- PIPE MATERIAL
- PROCESS FLOW STREAM
- NOMINAL LINE SIZE IN INCHES

EXPLANATION OF GATE DESIGNATION

20x54-SGV-E

- TYPE OF OPERATOR
- TYPE OF GATE
- WIDTH OF GATE IN INCHES
- HEIGHT OF GATE IN INCHES

EXPLANATION OF VALVE DESIGNATION

12 - BUV - E

- TYPE OF OPERATOR
- TYPE OF VALVE BODY
- NOMINAL SIZE OF VALVE IN INCHES

This Record Drawing is a combination of the sealed engineering contract drawings for this project, modified by information furnished by the contractor reflecting changes in the Project made during construction. The original sealed drawings are on file at the offices of FREESE AND NICHOLS, INC.
RECORD DRAWINGS PREPARED ON: 06/24/20

Freese and Nichols, Inc.
Texas Registered Engineering Firm F-2144

THE SEAL (NA) ORIGINALLY APPEARED ON THIS DOCUMENT WAS AUTHORIZED BY (NAME) _____ DATE _____
ON BEHALF OF FREESE AND NICHOLS, INC.
ALTERATION OF A SEALED DOCUMENT WITHOUT PROPER AUTHORITY IS PROHIBITED. IF ALTERED, THE ENGINEER IS OFFENSE UNDER THE TEXAS ENGINEERING PRACTICE ACT

FREESE NICHOLS

4040 Broadway, Street, Suite 600
San Antonio, Texas 78209-6350
Phone - (210) 298-8300
Fax - (210) 298-8901
Web - www.freese.com

CITY OF CASTROVILLE

WWTP CAPACITY EXPANSION PROJECT

GENERAL

STANDARD SYMBOLS

F&N JOB NO. CVL14259
DATE 6/10/16
DESIGNED CCG
DRAWN DDH
CHECKED TWS
FILE NAME GN-ALL-SYMBOLS.dwg

NO.	ISSUE	BY	DATE
	RECORD DRAWING	CCG	06/24/20
1	ISSUED FOR CONSTRUCTION	CCG	11/16/16

VERIFY SCALE Bar is one inch on original drawing. If not one inch on this sheet, adjust scale.
0 1"

SHEET G-3

SEQ.

ACAD Rel: 21.0s (LMS Tech)
Filename: N:\STANDARD\GN-ALL-SYMBOLS.dwg
Last Saved: 10/9/2019 11:13 AM Saved By: 03576

Plot Date: 6/18/2020 4:47 PM Plot By: 90119 Filename: N:\STANDARD\GN-ALL-SYMBOLS.dwg

(AUTOMATIC SCREEN)
HGL @ 2.7 MGD = 787.36
HGL @ 0.9 MGD = 785.69
HGL @ 0.7 MGD = 785.65
HGL @ 0.3 MGD = 785.53

(BYPASS MANUAL SCREEN)
HGL @ 2.7 MGD = 789.09
HGL @ 0.9 MGD = 788.48
HGL @ 0.7 MGD = 788.40
HGL @ 0.3 MGD = 788.22

(BYPASS MANUAL SCREEN)
HGL @ 2.7 MGD = 788.73
HGL @ 0.9 MGD = 788.35
HGL @ 0.7 MGD = 788.30
HGL @ 0.3 MGD = 788.17

(AUTOMATIC SCREEN)
HGL @ 2.7 MGD = 786.03
HGL @ 0.9 MGD = 785.36
HGL @ 0.7 MGD = 785.31
HGL @ 0.3 MGD = 785.20

HGL @ 2.7 MGD = 783.21
HGL @ 0.9 MGD = 780.85
HGL @ 0.7 MGD = 780.63
HGL @ 0.3 MGD = 780.37

HGL @ 2.7 MGD = 780.47
HGL @ 0.9 MGD = 780.36
HGL @ 0.7 MGD = 780.33
HGL @ 0.3 MGD = 780.32

HGL @ 2.7 MGD = 779.53
HGL @ 0.9 MGD = 779.44
HGL @ 0.7 MGD = 779.42
HGL @ 0.3 MGD = 779.41

(BNR BASIN NO. 1)
HGL @ 2.7 MGD = 778.96
HGL @ 0.9 MGD = 776.46
HGL @ 0.7 MGD = 776.11
HGL @ 0.3 MGD = 775.78

(BNR BASIN NO. 2)
HGL @ 2.7 MGD = 778.06
HGL @ 0.9 MGD = 776.20
HGL @ 0.7 MGD = 775.95
HGL @ 0.3 MGD = 775.67

HGL @ 2.7 MGD = 774.21

HGL @ 2.7 MGD = 775.62
HGL @ 0.9 MGD = 775.58
HGL @ 0.7 MGD = 775.57
HGL @ 0.3 MGD = 775.55

HGL @ 2.7 MGD = 773.64

MAX WSE @ OVERFLOW = 773.03

HGL @ 2.7 MGD = 770.17
HGL @ 0.9 MGD = 769.11
HGL @ 0.7 MGD = 769.01
HGL @ 0.3 MGD = 768.76

HGL @ 2.7 MGD = 769.47
HGL @ 0.9 MGD = 769.03
HGL @ 0.7 MGD = 768.96
HGL @ 0.3 MGD = 768.75

HGL @ 2.7 MGD = 767.92
HGL @ 0.9 MGD = 767.33
HGL @ 0.7 MGD = 767.30
HGL @ 0.3 MGD = 767.26

EL 791.50
BYPASS CHANNEL OVERFLOW EL 788.0
EL 785.00
10-RS-DI
8-RS-DI
6-RS-DI
FROM INFLUENT LIFT STATIONS
12-RS-PVC
NEW SCREENING STRUCTURE
HEAD AVAILABLE FOR FUTURE GRIT REMOVAL (2.79)
FUTURE GRIT REMOVAL
EL 782.00
WEIR EL 780.17
MAX WEIR EL 779.30 (ADJUSTABLE)
EL 782.00
NEW INFLUENT SPLITTER BOX
EL 768.03
NEW CARROUSEL BASINS
EL 776.78
WEIR EL. 775.50
NEW EFFLUENT BOX
10-ML-PVC (TO BASIN NO.1)
TO EXISTING CLARIFIER
TO BASIN NO. 2
14-ML-DI
EL 761.36
NEW SECONDARY CLARIFIER NO. 1
EL 776.78
16-SE-PVC
EMERGENCY OVERFLOW WEIR EL 772.75
EL 774.50
EFFLUENT INV. EL 771.00
EL 771.03
16-SE-PVC
FROM EXISTING CLARIFIER
NEW CLOTH MEDIA FILTERS
V-NOTCH WEIR EL 768.25
18-FE-PVC
18-FE-PVC
EXISTING CHLORINE CONTACT BASIN
REUSE PONDS MAX OPERATION WSE=767.25
TO RIVER DISCHARGE
12-FE-PVC
100-YR FLOOD PLAIN EL=742.00
FL 732.83

790
780
770
760
750
740
730

GENERAL NOTES

1. DESIGN PEAK 2-HR FLOW = 2.7 MGD
2. DESIGN AVERAGE DAILY FLOW = 0.9 MGD
3. PERMITTED AVERAGE DAILY FLOW = 0.7 MGD
4. CURRENT AVERAGE DAILY FLOW = 0.3 MGD
5. HGL IS SHOWN AT 2.7 MGD TO REUSE POND DISCHARGE

This Record Drawing is a combination of the sealed engineering contract drawings for this project, modified by information furnished by the contractor reflecting changes in the Project made during construction. The original sealed drawings are on file at the offices of FREESE AND NICHOLS, INC.
RECORD DRAWINGS PREPARED ON: 06/24/20

Freese and Nichols, Inc.
Texas Registered Engineering Firm F-2144

THE SEAL HAS ORIGINALLY APPEARED ON THIS DOCUMENT WAS AUTHORIZED BY KENNETH BOEHLER P.E. ON 6/10/16. IT IS A VIOLATION OF A SEALED DOCUMENT WITHOUT PROPER AUTHORIZATION AND/OR ALTERATION OF A SEALED DOCUMENT IS A VIOLATION OF THE TEXAS ENGINEERING PRACTICE ACT

FREESE NICHOLS
4040 Broadway Street, Suite 600
San Antonio, Texas 78209-6350
Phone - (210) 829-3000
Fax - (210) 826-9011
Web - www.freese.com

CITY OF CASTROVILLE

WWTP CAPACITY EXPANSION PROJECT

GENERAL

MAIN TRAIN HYDRAULIC PROFILE

F&N JOB NO. CVL14259
DATE 6/10/16
DESIGNED GB
DRAWN MAJ
CHECKED TWS
FILE NAME GN-ALL-SM-HYDP.dwg

NO.	ISSUE	BY	DATE
2	RECORD DRAWING	GB	06/24/20
1	ISSUED FOR CONSTRUCTION	GB	11/16/16

VERIFY SCALE Bar is one inch on original drawing. If not one inch on this sheet, adjust scale.
0 1"

SHEET G-4
SEQ.

ACAD Rel: 21.0s (LMS Tech)
Filename: N:\STANDARD\GN-ALL-SM-HYDP.dwg
Last Saved: 10/9/2019 11:12 AM Saved By: 03576

Plot Date: 6/18/2020 4:48 PM Plot By: 90119 Filename: N:\STANDARD\GN-ALL-SM-HYDP.dwg

GENERAL NOTES

1. DESIGN PEAK 2-HR FLOW = 2.7 MGD
2. DESIGN AVERAGE DAILY FLOW = 0.9 MGD
3. PERMITTED AVERAGE DAILY FLOW = 0.7 MGD
4. CURRENT AVERAGE DAILY FLOW = 0.3 MGD
5. HGL IS SHOWN AT 2.7 MGD TO REUSE POND DISCHARGE

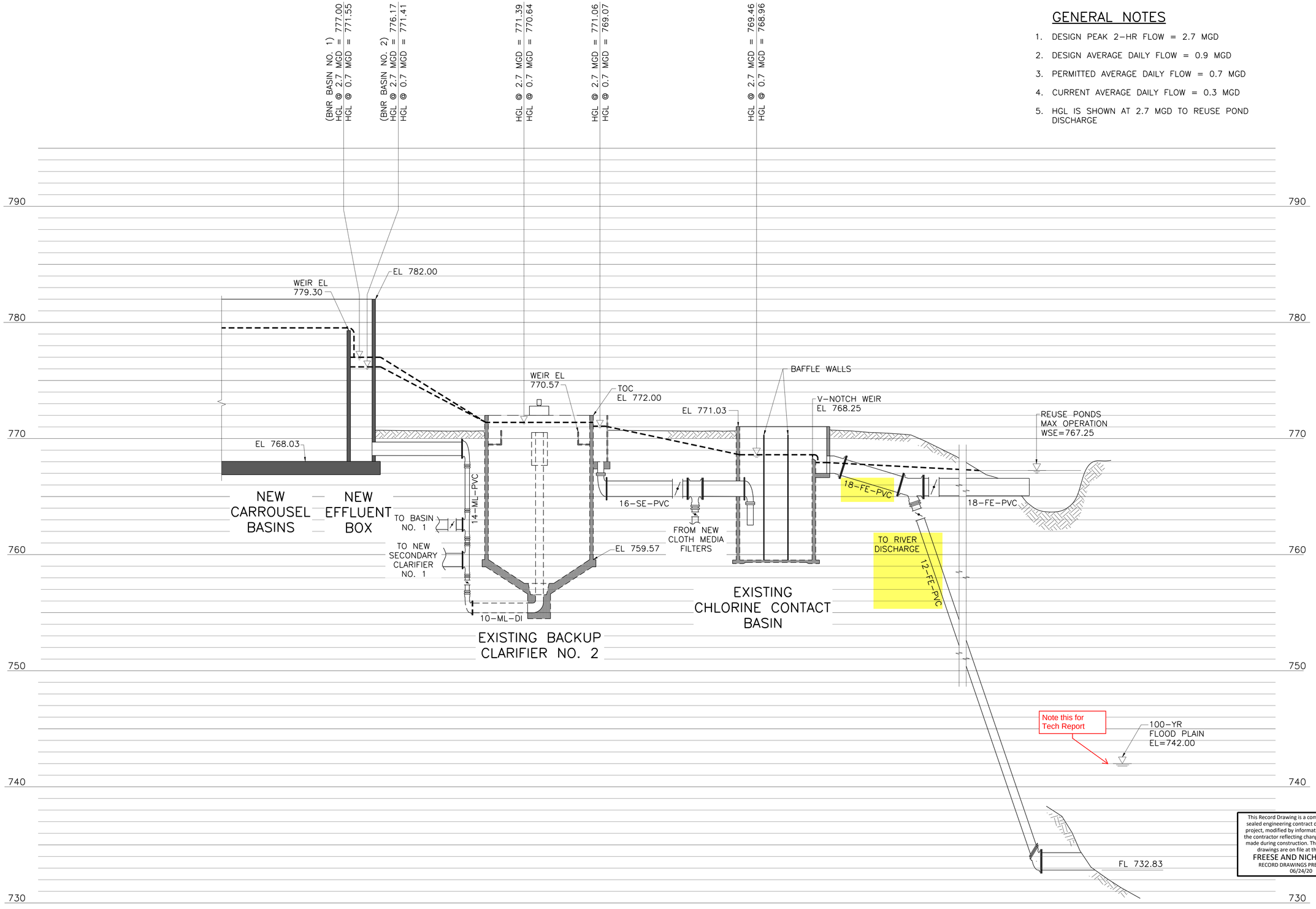

This Record Drawing is a combination of the sealed engineering contract drawings for this project, modified by information furnished by the contractor reflecting changes in the Project made during construction. The original sealed drawings are on file at the offices of FREESE AND NICHOLS, INC. RECORD DRAWINGS PREPARED ON: 06/24/20

Freese and Nichols, Inc.
Texas Registered Engineering Firm F-2144

THE SEAL THAT ORIGINALLY APPEARED ON THIS DOCUMENT WAS AUTHORIZED BY GENNAUT BOHSNER P.E. TEXAS NO. 94926 ON 08/10/2016. ALTERATION OF SEALED DOCUMENT WITHOUT PROPER NOTIFICATION OF THE RESPONSIBLE ENGINEER IS AN OFFENSE UNDER THE TEXAS ENGINEERING PRACTICE ACT.

FREESE AND NICHOLS
4040 Broadway Street, Suite 600
San Antonio, Texas 78209-6350
Phone - (210) 298-3800
Fax - (210) 298-3801
Web - www.freese.com

CITY OF CASTROVILLE
WWTP CAPACITY EXPANSION PROJECT
GENERAL
EXISTING CLARIFIER OPERATION
HYDRAULIC PROFILE

NO.	ISSUE	BY	DATE
2	RECORD DRAWING	GB	06/24/20
1	ISSUED FOR CONSTRUCTION	GB	11/16/16

F&N JOB NO. CVL14259
DATE 6/10/16
DESIGNED GB
DRAWN MAJ
REVISED
CHECKED TWS
FILE NAME GN-ALL-SM-HYDP.dwg

VERIFY SCALE 0 1
Bar is one inch on original drawing. If not one inch on this sheet, adjust scale.

SHEET G-5
SEQ.

ACAD Rel: 21.0s (LMS Tech)
Filename: N:\STANDARD\GN-ALL-SM-HYDP.dwg
Last Saved: 10/9/2019 11:12 AM Saved By: 03576

Plot Date: 6/18/2020 4:48 PM Plot By: 90119 Filename: N:\STANDARD\GN-ALL-SM-HYDP.dwg

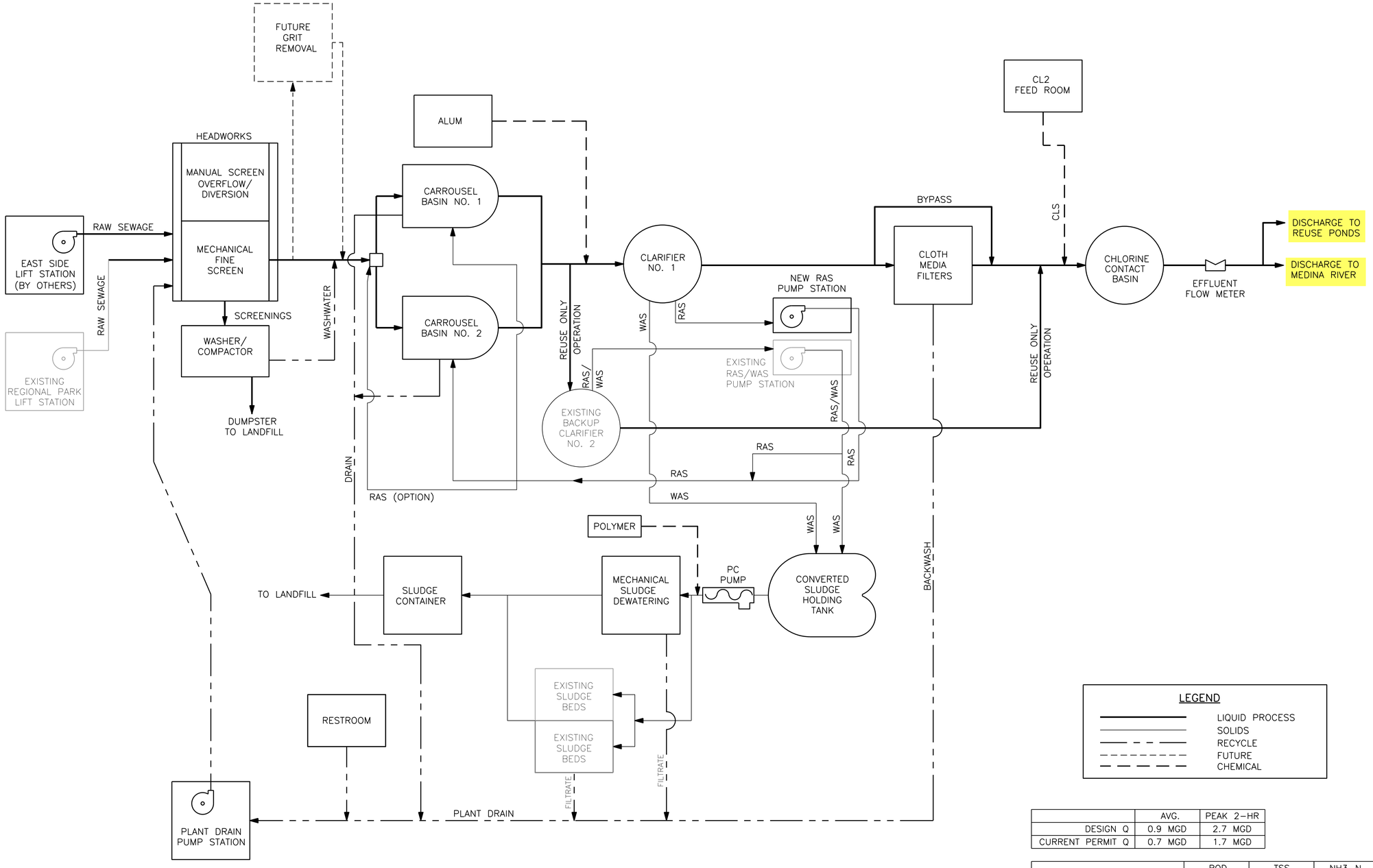

LEGEND

- LIQUID PROCESS
- SOLIDS
- RECYCLE
- FUTURE
- CHEMICAL

	AVG.	PEAK 2-HR
DESIGN Q	0.9 MGD	2.7 MGD
CURRENT PERMIT Q	0.7 MGD	1.7 MGD

	BOD	TSS	NH3-N	TOTAL P	D.O.
INFLUENT	280 mg/l	330 mg/l	60 mg/l	10 mg/l	–
PERMIT LIMITS– EFFLUENT DISCHARGE TO RIVER	5 mg/l	5 mg/l	2 mg/l	1 mg/l	≥4
PERMIT LIMITS–EFFLUENT DISCHARGE TO REUSE PONDS	20 mg/l	20 mg/l	N\A	N\A	N\A

This Record Drawing is a combination of the sealed engineering contract drawings for this project, modified by information furnished by the contractor reflecting changes in the Project made during construction. The original sealed drawings are on file at the offices of FREESE AND NICHOLS, INC. RECORD DRAWINGS PREPARED ON: 06/24/20

Freese and Nichols, Inc.
Texas Registered Engineering Firm F-2144

THE SEAL THAT ORIGINALLY APPEARED ON THIS DOCUMENT WAS AUTHORIZED BY CORY C. GEE P.E. TEXAS NO. 118865 ON 06/10/2016. ALTERATION OF A SEALED DOCUMENT WITHOUT PROPER NOTIFICATION OF THE RESPONSIBLE ENGINEER IS AN OFFENSE UNDER THE TEXAS ENGINEERING PRACTICE ACT.

FREESE AND NICHOLS
4040 Broadway Street, Suite 600
San Antonio, Texas 78209-6350
Phone – (210) 298-3800
Fax – (210) 298-3801
Web – www.freese.com

CITY OF CASTROVILLE
WWTP CAPACITY EXPANSION PROJECT
GENERAL
PROCESS FLOW DIAGRAM

NO.	ISSUE	BY	DATE
2	RECORD DRAWING	CCG	06/24/20
1	ISSUED FOR CONSTRUCTION	CCG	11/16/16

F&N JOB NO. CVL14259
DATE 6/10/16
DESIGNED CCG
DRAWN DDH
REVISED
CHECKED TWS
FILE NAME GN-ALL-DG-PROC01.dwg

VERIFY SCALE 0 1 Bar is one inch on original drawing. If not one inch on this sheet, adjust scale.

SHEET G-6
SEQ.

ACAD Rel: 21.0s (LMS Tech)
Filename: N:\STANDARD\GN-ALL-DG-PROC01.dwg
Last Saved: 10/9/2019 11:11 AM Saved By: 03576

Plot Date: 6/18/2020 4:48 PM Plot By: 90119 Filename: N:\STANDARD\GN-ALL-DG-PROC01.dwg

GENERAL NOTES

1. CONSTRUCTION SHALL BE IN ACCORDANCE WITH THE 2012 INTERNATIONAL BUILDING CODE, INCLUDING LOCAL SUPPLEMENTS, EXCEPT WHERE APPLICABLE CODES OR THE CONTRACT DOCUMENTS ARE MORE RESTRICTIVE.

2. DEAD LOADS: ACTUAL WEIGHTS OF ALL MATERIALS OF CONSTRUCTION INCORPORATED INTO THE STRUCTURES AND WEIGHTS OF FIXED SERVICE EQUIPMENT.

3. LIVE LOADS:
   A. PLATFORMS, WALKWAYS, STAIRS: 100 PSF
   B. MECH, ELECT, AND EQUIP ROOMS, EQUIPMENT PADS: 150 PSF (300 PSF AT EQUIP)
   C. CHLORINE FEED/STORAGE: 150 PSF
   D. ADMINISTRATION ROOM: 50 PSF
   E. BUILDING ROOFS: 20 PSF
   F. GRATING: SAME AS SURROUNDING AREA BUT NOT LESS THAN 100 PSF. IF SUBJECTED TO VEHICULAR TRAFFIC, LIVE LOAD SHALL CORRESPOND TO AASHTO HL-93 WHEEL LOAD.

4. SNOW LOAD:
   A. GROUND SNOW LOAD: Pg = 5 PSF
   B. SNOW IMPORTANCE FACTOR: 1.10

5. LATERAL LOADS:
   A. RISK CATEGORY III
   B. WIND LOAD:
      i. ULTIMATE DESIGN WIND SPEED: V_{ult} = 120 MPH
      ii. WIND EXPOSURE: C
      iii. COMPONENTS AND CLADDING PRESSURES, FOR VARIOUS ZONES USING AN EFFECTIVE WIND AREA OF 9 SQ. FT. AS DEFINED BY ASCE 7-10, FIGURE 30.4, SHALL BE USED.
   C. SEISMIC LOAD:
      i. SEISMIC IMPORTANCE FACTOR: I = 1.25
      ii. MAPPED SPECTRAL ACCELERATIONS: S_S = 0.071, S_1 = 0.024
      iii. SITE CLASS: D
      iv. SPECTRAL RESPONSE COEFFICIENT: S_{DS} = 0.076, S_{D1} = 0.039
      v. SEISMIC DESIGN CATEGORY: A

6. SUBSTITUTION OF EXPANSION ANCHORS FOR CAST-IN-PLACE ANCHORS OR POST-INSTALLED ADHESIVE ANCHORS SHOWN ON THE DRAWINGS WILL NOT BE PERMITTED UNLESS APPROVED BY THE ENGINEER IN ADVANCE.

7. VERIFY ALL DIMENSIONS, ELEVATIONS, OPENING SIZES, AND MECHANICAL AND ELECTRICAL EQUIPMENT WEIGHTS PRIOR TO STARTING WORK.

8. REMOVE ALL ABANDONED FOUNDATIONS, UTILITIES, PIPELINES, ETC. THAT INTERFERE WITH NEW CONSTRUCTION.

9. FIELD VERIFY ALL EXISTING CONDITIONS, INCLUDING LOCATION AND DIMENSIONS OF ALL EXISTING CONSTRUCTION AND UTILITIES. NOTIFY ENGINEER IF THERE IS A CONFLICT BETWEEN THE CONTRACT DOCUMENTS AND EXISTING CONDITIONS BEFORE PROCEEDING WITH WORK.

10. PROVIDE EXCAVATION SHORING TO PROTECT AND SUPPORT FOUNDATION SOILS UNDER EXISTING STRUCTURES.

11. THE STRUCTURES ARE DESIGNED FOR STABILITY IN THE FINAL CONDITION ONLY. PROVIDE TEMPORARY BRACING AND SHORING AS REQUIRED FOR STABILITY DURING CONSTRUCTION.

12. REFER TO OTHER DISCIPLINE DRAWINGS FOR SIZE AND LOCATION OF ALL OPENINGS, DEPRESSIONS, OFFSETS, SLEEVES, CURBS, PADS, INSERTS, ETC. NOT SHOWN ON STRUCTURAL DRAWINGS. COORDINATE WITH MECHANICAL AND ELECTRICAL EQUIPMENT REQUIREMENTS BEFORE FABRICATION OF MATERIALS.

13. PLANS, SECTIONS, AND DETAILS ARE NOT TO BE SCALED FOR DETERMINATION OF QUANTITIES, LENGTHS, OR FIT OF MATERIALS.

14. THE GENERAL NOTES AND TYPICAL DETAILS ARE GENERAL AND APPLY TO THE ENTIRE PROJECT EXCEPT WHERE THERE ARE SPECIFIC INDICATIONS TO THE CONTRARY.

CONCRETE

1. CONCRETE SHALL HAVE A MINIMUM 28-DAY COMPRESSIVE STRENGTH OF 4,000 PSI UNLESS SPECIFIED OTHERWISE.

2. REINFORCING BARS SHALL BE IN ACCORDANCE WITH ASTM A615, GRADE 60, DEFORMED.

3. CONCRETE CLEAR COVER OVER REINFORCING SHALL BE AS LISTED BELOW, UNLESS NOTED OTHERWISE.
   A. CONCRETE CAST AGAINST AND PERMANENTLY EXPOSED TO EARTH: 3"
   B. CONCRETE EXPOSED TO SEWAGE: 2-1/2"
   C. CONCRETE EXPOSED TO EARTH, WATER, OR WEATHER:
      i. SLABS:
         1. #6 BARS AND LARGER: 2-1/2"
         2. #5 BARS AND SMALLER: 2"
      ii. BEAMS AND COLUMNS: 2-1/2"
      iii. WALLS:
         1. CIRCULAR TANKS WITH RING TENSION: 2-1/2"
         2. ALL OTHERS: 2"
   D. FORMED CONCRETE SURFACES NOT PERMANENTLY EXPOSED TO WEATHER NOR IN CONTACT WITH GROUND:
      i. BEAMS AND COLUMNS: 2"
      ii. SLABS AND WALLS: 1-1/2"

4. ALL EXPOSED EDGES OF CONCRETE SHALL BE CHAMFERED 3/4" INSIDE FORMS OR TOOLED TO 3/4" RADIUS ON SLABS, UNLESS NOTED OTHERWISE.

5. SLABS ON GRADE SHALL HAVE CONSTRUCTION JOINTS AND/OR CONTROL JOINTS (SAWED JOINTS) LOCATED AS SHOWN ON THE DRAWINGS OR, IF NOT SHOWN ON DRAWINGS, AT 15 FEET MAXIMUM SPACING. CONTRACTOR SHALL LOCATE SLAB JOINTS ON RECORD INFORMATION SHOP DRAWINGS. DO NOT PROVIDE SAWED JOINTS IN STRUCTURAL SLABS.

6. WHERE NECESSARY, VERTICAL CONSTRUCTION JOINTS SHALL BE LOCATED WITHIN THE CENTER ONE-THIRD OF THE SPAN. ALL JOINTS SHALL BE THOROUGHLY CLEANED AND PURPOSELY ROUGHENED TO 1/4" PRIOR TO PLACING ADJACENT CONCRETE. JOINTS IN EXPOSED CONCRETE, EXCEPT SLABS, SHALL BE USED WITH A MAXIMUM SPACING OF 40', UNLESS NOTED OTHERWISE.

7. ADDITIONAL CONSTRUCTION JOINTS SHALL HAVE PRIOR APPROVAL OF THE ENGINEER.

8. PENETRATIONS OTHER THAN SHOWN SHALL NOT BE ALLOWED WITHOUT PRIOR APPROVAL FROM THE ENGINEER.

9. IN CASES WHERE REINFORCING BARS CANNOT BE EXTENDED AS FAR AS REQUIRED DUE TO THE LIMITED EXTENT OF THE ADJACENT CONCRETE STRUCTURE, THE BARS SHALL EXTEND AS FAR AS POSSIBLE AND END IN STANDARD HOOKS.

10. HOOKS SHOWN ON DRAWINGS SHALL BE ASSUMED TO BE STANDARD HOOKS PER ACI 318, UNLESS NOTED OTHERWISE.

11. LAP SPLICES IN BEAMS AND WALLS SHALL BE STAGGERED, UNLESS INDICATED OTHERWISE.

12. ALL REINFORCING SHALL BE CONTINUOUS. CONTINUOUS BARS SHALL LAP 48 BAR DIAMETERS OF SMALLER BAR LAPPED, UNLESS NOTED OTHERWISE. ALL REBAR EMBEDMENT LENGTHS SHALL BE 36 BAR DIAMETERS, UNLESS NOTED OTHERWISE.

13. CONDUITS AND PIPING EMBEDDED IN CONCRETE SHALL BE SPACED A MINIMUM OF FOUR DIAMETERS AND THE OUTSIDE DIAMETER SHALL BE LESS THAN 30 PERCENT OF THE MEMBER THICKNESS PLACED BETWEEN LAYERS OF REINFORCING.

14. THE CONTRACTOR SHALL BE RESPONSIBLE FOR THE DESIGN OF ALL FORMING, TEMPORARY BRACING AND SHORING.

FOUNDATION

1. FOUNDATIONS HAVE BEEN DESIGNED IN ACCORDANCE WITH THE GEOTECHNICAL REPORT "GEOTECHNICAL ENGINEERING STUDY – WASTEWATER TREATMENT PLANT CAPACITY EXPANSION PROJECT – CASTROVILLE, TEXAS," DATED DECEMBER 17, 2015, PREPARED BY ARIAS GEOPROFESSIONALS (ARIAS JOB NO. 2015-469), PREPARED FOR FREESE AND NICHOLS, INC.

2. AT THE LOCATIONS WHERE UTILITY TRENCHES CROSS THE STRUCTURE BUILDING LINE, 5'-0" OF EACH TRENCH CENTERED ON THE STRUCTURE BUILDING LINE SHALL BE BACKFILLED AS FOLLOWS: OUTSIDE THE STRUCTURE BUILDING LINE BACKFILL ABOVE THE UTILITY WITH A COMPACTED, LOW-PERMEABILITY CLAY; INSIDE THE STRUCTURE BUILDING LINE BACKFILL WITH SPECIFIED SELECT FILL; EMBEDMENT MATERIAL BELOW AND AROUND THE UTILITY SHALL BE FLOWABLE FILL.

3. EXCAVATION, SUBGRADE PREPARATION, AND BACKFILL FOR STRUCTURES SHALL FOLLOW RECOMMENDATIONS IN GEOTECHNICAL REPORT AND AS NOTED BELOW AND ON PLANS.
   A. REMOVE THE SURFICIAL VEGETATION, WASTE, AND LOOSE SOILS TO A MINIMUM DEPTH OF 6".
   B. EXCAVATE THE SITE TO THE PROPOSED FINISHED SUBGRADE WHERE CUTTING TO SUBGRADE IS REQUIRED. REMOVE UNCONTROLLED FILL AND ANY DELETERIOUS MATERIALS AS NEEDED (ESTIMATED TO EXTEND TO A DEPTH OF ABOUT 6'-0" BELOW EXTING GRADE). EXTEND THE LATERAL LIMITS OF THE EXCAVATION 5'-0" BEYOND THE PERIMETER OF THE FOUNDATION, UNLESS NOTED OTHERWISE.
   C. PROOF ROLL THE EXPOSED SUBGRADE IN ACCORDANCE WITH TXDOT ITEM 216. SOFT OR PUMPING SUBGRADE AREAS SHALL BE EXCAVATED IN BOTH HORIZONTAL AND VERTICAL DIRECTIONS EXPOSING COMPETENT SUBGRADE. GRADE SHALL BE RESTORED WITH COMPACTED SELECT FILL AS RECOMMENDED IN GEOTECHNICAL REPORT.
   D. FOUNDATION EXCAVATIONS SHALL BE OBSERVED BY A LICENSED PROFESSIONAL GEOTECHNICAL ENGINEER. EACAVATIONS SHALL BE OBSERVED TO CONFIRM THAT LOOSE, SOFT, OR UNDESIRABLE MATERIALS ARE REMOVED, AND THAT THE FOUNDATIONS FOR THE STRUCTURES WILL BEAR ON SATISFACTIRY MATERIAL.
   E. AFTER PROOF ROLLING, THE EXPOSED SUBGRADE SHALL BE SCARIFIED TO A DEPTH OF 6", AND RECOMPACTED AS RECOMMENDED IN GEOTECHNICAL REPORT.
   F. BACKFILL MATERIALS:
      1. CRUSHED LIMESTONE BASE MATERIAL: CONFORMS TO TXDOT STANDARD SPECIFICATIONS, ITEM 247, TYPE A, GRADE 1 OR 2. COMPACT TO A MINIMUM OF 98 PERCENT OF THE MAXIMUM DRY DENSITY AS DETERMINED BY ASTM D698 (STANDARD PROCTOR), AND AT A MOISTURE CONTENT WITHIN 2 PERCENT BELOW TO 3 PERCENT ABOVE THE OPTIMUM MOISTURE CONTENT.
      2. SELECT FILL: SELECT FILL SHALL CONSIST OF MATERIALS WHICH ARE CLASSIFIED AS SP, SM, SC, CL, OR DUAL CLASSIFICATIONS THEREOF, WHICH HAVE A LIQUID LIMIT LESS THAN OR EQUAL TO 35 AND A PLASTICITY INDEX BETWEEN A MINIMUM OF 7 AND A MAXIMUM OF 20, WHICH ARE FREE OF ORGANIC MATERIALS. (CLASS 4 EARTH FILL). COMPACT TO A MINIMUM OF 98 PERCENT OF THE MAXIMUM DRY DENSITY AS DETERMINED BY ASTM D698 (STANDARD PROCTOR), AND AT A MOISTURE CONTENT WITHIN 2 PERCENT BELOW TO 3 PERCENT ABOVE THE OPTIMUM MOISTURE CONTENT.
      3. ON-SITE NATIVE SOILS: ON-SITE NATIVE LEAN CLAY AND FAT CLAY SOILS WHICH ARE FREE OF ORGANIC MATERIAL, DEBRIS, TRASH, AND ROCKS LARGER THAN 3" IN SIZE. COMPACT TO WITHIN A MINIMUM OF 95 PERCENT TO A MAXIMUM OF 100 PERCENT OF THE MAXIMUM DRY DENSITY AS DETERMINED BY ASTM D698 (STANDARD PROCTOR), AND AT A MOISTURE CONTENT WITHIN 1 PERCENT BELOW TO 3 PERCENT ABOVE THE OPTIMUM MOISTURE CONTENT.
      4. FLOWABLE FILL: CONFORMING TO SPECIFICATION SECTION 31 23 23.34 FLOWABLE FILL.
   G. BACKFILL SHALL BE PLACED IN MAXIMUM 8" LOOSE LIFTS FOR HEAVY EQUIPMENT AND 4" LOOSE LIFTS FOR HAND-DIRECTED EQUIPMENT.
   H. IN-PLACE FIELD DENSITY TESTS SHALL BE CONDUCTED AT A RATE OF ONE TEST PER 5,000 SQUARE FEET FOR EVERY LIFT, WITH A MINIMUM OF THREE TESTS PER LIFT.
   I. THE SUBGRADE MOISTURE CONTENT AND DENSITY SHALL BE MAINTAINED DURING CONSTRUCTION.

4. ALL BELOW GRADE FOUNDATION ELEMENTS ARE DESIGNED WITH FORMED SIDES, UNLESS NOTED OTHERWISE. ALL CONCRETE EXPOSED TO VIEW IN THE FINAL CONDITION SHALL BE FORMED.

5. DO NOT BACKFILL FOUNDATION WALLS UNTIL THE CONCRETE HAS REACHED ITS SPECIFIED 28-DAY COMPRESSIVE STRENGTH OR 7 DAYS, WHICHEVER IS LONGER, OR UNTIL THE RESTRAINING SLABS OR ADEQUATE BRACING ARE IN PLACE.

6. EXTERIOR SLABS SHALL SLOPE AWAY FROM THE STRUCTURES A MINIMUM OF 1/4" PER FOOT, UNLESS NOTED OTHERWISE. GRADING AROUND STRUCTURES SHALL BE SLOPED TO DRAIN ALL WATER AWAY FROM STRUCTURES.

7. DESIGN BEARING PRESSURE (NET) IS 2500 PSF FOR FOUNDATIONS BEARING ON PROPERLY PREPARED SUBGRADE AS RECOMMENDED IN THE GEOTECHNICAL REPORT. SUITABLE BEARING MATERIALS SHALL BE VERIFIED BY A LICENSED PROFESSIONAL GEOTECHNICAL ENGINEER.

8. MOISTURE CONTENT IN EXCAVATIONS SHALL BE MAINTAINED UNTIL FOUNDATION IS PLACED. FOUNDATIONS SHALL BE PLACED AS SOON AS PRACTICAL AFTER EXCAVATIONS ARE COMPLETED. 1

POST-INSTALLED ANCHORS (EXPANSION OR ADHESIVE)

1. INSTALL IN ACCORDANCE WITH MANUFACTURER'S PRINTED INSTALLATION INSTRUCTIONS (MPII), BUT NOT LESS THAN THAT INDICATED BELOW.

2. ADHESIVE ANCHORS SHALL ONLY BE INSTALLED BY CONSTRUCTION PERSONNEL CERTIFIED UNDER ACI/CRSI ADHESIVE ANCHOR INSTALLER CERTIFICATION PROGRAM. SUBMIT CERTIFICATIONS AS RECORD DATA.

3. ANCHOR DIAMETER AND EMBEDMENT SHALL BE AS INDICATED.

4. HOLES SHALL BE DRILLED USING ROTARY HAMMER DRILLS WITH ANSI MATCHED TOLERANCE CARBIDE-TIPPED DRILL BITS. DRILL BIT DIAMETER SHALL MATCH DIAMETER RECOMMENDED BY MANUFACTURER.

5. USE CARE AND CAUTION WHEN INSTALLING TO AVOID CUTTING OR DAMAGING EXISTING REINFORCING STEEL.

6. AS INDICATED BLOW HOLES CLEAN WITH COMPRESSED AIR, 80 PSI MINIMUM. START BLOWING WITH NOZZLE AT BACK OF HOLE AND SLOWLY EXTRACT NOZZLE.

7. EXPANSION ANCHORS SHALL BE A STUD BOLT TYPE WITH HEX HEAD NUT AND SHALL BE STAINLESS STEEL, TYPE 316, UNLESS NOTED OTHERWISE, AND AS NOTED BELOW:
   A. ANCHORS SHALL BE HILTI KWIK BOLT TZ, OR AN APPROVED EQUAL.
   B. BLOW HOLES CLEAN. REPEAT 3 TIMES.
   C. DRIVE ANCHOR INTO HOLE WITH A HAMMER AND THEN TIGHTEN TO SPECIFIED TORQUE.

1

8. ADHESIVE ANCHORS SHALL BE DEFORMED REINFORCING BARS CONFORMING TO ASTM A615, GRADE 60, OR THREADED ROD CONFORMING TO STAINLESS STEEL, TYPE 316, UNLESS NOTED OTHERWISE, AND AS NOTED BELOW:
   A. ADHESIVE SHALL BE HILTI HIT-RE 500-SD, OR AN APPROVED EQUAL. USE HILTI HIT-HY 70 FOR HOLLOW OR GROUTED MASONRY, OR AN APPROVED EQUAL.
   B. PRIOR TO INSTALLATION: ALL DEFORMED BARS AND THREADED ROD SHALL BE CLEAN, FREE OF OIL, GREASE, OR OTHER RESIDUE, IN ACCORDANCE WITH MPII.
   C. CLEAN HOLES BEFORE INSTALLING ANCHOR PER MPII, BUT NOT LESS THAN THE FOLLOWING:
      i. BLOW HOLE CLEAN. REPEAT 3 TIMES.
      ii. BRUSH HOLE WITH SPECIFIED BRUSH. REPEAT 3 TIMES.
      iii. BLOW HOLE CLEAN. REPEAT 3 TIMES.
   D. INSTALL EPOXY STARTING AT BACK OF HOLE. AS REQUIRED BY MPII, USE MANUFACTURER SUPPLIED PISTON PLUG INJECTION SYSTEM FOR ALL HORIZONTAL AND VERTICALLY INCLINED HOLES.
   E. INSTALL ANCHOR BY SIMULTANTEOUSLY TWISTING AND INSERTING INTO HOLE.
   F. ALLOW ANCHOR TO SET REQUIRED TIME. DO NOT DISTURB.
   G. TIGHTEN NUT. DO NOT OVER-TORQUE.
   H. MINIMUM CONCRETE AGE AT TIME OF INSTALLATION: 28 DAYS
   I. CONCRETE TEMPERATURE RANGE AT TIME OF INSTALLATION SHALL BE: 41DEG F TO 104DEG F.
   J. CONCRETE MOISTURE CONDITION AT TIME OF INSTALLATION: DRY.

METAL ROOF DECK

1. DO NOT HANG LIGHTING, PLUMBING, ELECTRICAL, OR ANY OTHER UTILITY OR ARCHITECTURAL FINISHES FROM UNDERSIDE OF METAL DECK.

2. CLUSTERS OF OPENINGS FOR PIPE OR PIPE SLEEVES SHALL BE ACCOUNTED FOR AND COORDINATED WITH THOSE TRADES, PROVIDING REINFORCING WHERE REQUIRED.

3. HOLES IN METAL DECK MAY BE MADE ONLY AS SHOWN ON THE SHOP DRAWINGS.

4. DECKING DESIGN IS BASED ON A 3-SPAN CONDITION. DECKING INSTALLED WITH LESS THAN 3 SPANS SHALL BE EVALUATED FOR THE REQUIRED LOADING AND THE THICKNESS INCREASED AS REQUIRED. WHERE POSSIBLE, DECKING SHALL BE INSTALLED WITH AT LEAST A 2-SPAN CONDITION.

5. METAL DECK SHALL BE ATTACHED TO ALL FRAMING MEMBERS WHICH ARE BOTH PERPENDICULAR AND PARALLEL TO DECK SPANS USING #12 SELF DRILLING SCREWS: WITHIN 3'-0" OF DECK EDGES AT RAKE, RIDGE, AND EAVE ATTACH AT 6" ON CENTER; ALL OTHER AREAS OF DECK ATTACHED AT 12" ON CENTER. PROVIDE MINIMUM 2 #10 SELF DRILLING SCREW SIDE LAP FASTENERS PER SPAN, BUT NOT MORE THAN 18" ON CENTER.

This Record Drawing is a combination of the sealed engineering contract drawings for this project, modified by information furnished by the contractor reflecting changes in the Project made during construction. The original sealed drawings are on file at the offices of FREESE AND NICHOLS, INC.
RECORD DRAWINGS PREPARED ON: 6/24/2020

1

Freese and Nichols, Inc.
Texas Registered Engineering Firm F-2144

THE SEAL APPEARING ON THIS DOCUMENT WAS AUTHORIZED BY JOSEPH A. FULTZ, P.E. 6/24/2020
TEXAS NO. 92201
IT IS A VIOLATION OF THE TEXAS ENGINEERING PRACTICE ACT FOR ANY PERSON TO ALTER THIS DOCUMENT IN ANY MANNER WITHOUT THE EXPRESS AND APPROPRIATE PERMISSION AND AUTHORIZATION OF THE RESPONSIBLE ENGINEER NAMED HEREON. IT IS A VIOLATION OF THE TEXAS ENGINEERING PRACTICE ACT FOR ANY PERSON TO REPRODUCE THIS DOCUMENT IN ANY MANNER WITHOUT THE EXPRESS AND APPROPRIATE PERMISSION AND AUTHORIZATION OF THE RESPONSIBLE ENGINEER NAMED HEREON. © COPYRIGHT FREESE AND NICHOLS, INC. 2020 ALL RIGHTS RESERVED

FREESE NICHOLS
4040 Broadway Street, Suite 600
San Antonio, Texas 78209-6350
Phone - (210) 829-3800
Fax - (210) 298-3801
Web - www.freese.com

CITY OF CASTROVILLE
WWTP CAPACITY EXPANSION PROJECT
STRUCTURAL
GENERAL
STRUCTURAL GENERAL NOTES #1

F&N JOB NO. CVL14259
DATE 6/10/16
DESIGNED MRR
DRAWN JLM
CHECKED AD
FILE NAME ST-CVL-GN-NOTE01.dwg

NO.	ISSUE	BY	DATE
1	RECORD DRAWING	MRR	06/24/20
1	ISSUED FOR CONSTRUCTION	MRR	11/16/16
1	ADDENDUM NO. 6	MRR	7/28/16

VERIFY SCALE Bar is one inch on original drawing. If not one inch on this sheet, adjust scale.
0" 1"

SHEET G-S1
SEQ.

ACAD Rel: 21.0s (LMS Tech)
Filename: N:\ST\ST-CVL-GN-NOTE01.dwg
Last Saved: 6/17/2020 4:24 PM Saved By: 02198

Plot Date: 6/18/2020 11:11 AM Plot By: 02198 Filename: N:\ST\ST-CVL-GN-NOTE01.dwg

REINFORCED HOLLOW CMU

1. MASONRY CONSTRUCTION SHALL BE INSPECTED AND EVALUATED IN ACCORDANCE WITH THE REQUIREMENTS OF SECTION 1705.4 OF THE 2012 INTERNATIONAL BUILDING CODE.
2. CONCRETE MASONRY UNITS SHALL BE IN ACCORDANCE WITH ASTM C90 AND HAVE A MINIMUM NET AREA COMPRESSIVE STRENGTH OF 1,900 PSI.
3. MASONRY DESIGN IS BASED ON A SPECIFIED COMPRESSIVE STRENGTH OF MASONRY, f'm, EQUAL TO 1,500 PSI.
4. TYPE S PORTLAND CEMENT–LIME MORTAR SHALL BE USED AND SHALL BE PROPORTIONED ACCORDING TO THE PROPORTIONING SPECIFICATION REQUIREMENTS GIVEN IN ASTM C270.
5. CELLS WHICH CONTAIN REINFORCING STEEL SHALL BE FILLED SOLIDLY WITH GROUT, INCLUDING BOND BEAMS, LINTELS, AND PILASTERS. GROUT SHALL BE PROPORTIONED BY VOLUME ACCORDING TO ASTM C476.
6. LINTEL BLOCKS SHALL NOT BE USED AS BOND BEAM BLOCKS EXCEPT WHERE BOTTOM OF BOND BEAM EQUALS TOP OF OPENING.
7. REINFORCING BARS SHALL BE IN ACCORDANCE WITH ASTM A615, GRADE 60, DEFORMED.
8. VERTICAL CELLS TO BE FILLED WITH GROUT SHALL HAVE VERTICAL ALIGNMENT SUFFICIENT TO MAINTAIN A CLEAR UNOBSTRUCTED CONTINUOUS VERTICAL CELL NOT LESS THAN 3" x 3" IN PLAN DIMENSIONS.
9. FOUNDATION DOWELS SHALL EXTEND A MINIMUM OF 30 BAR DIAMETERS INTO THE FOUNDATION CONCRETE AND 60 BAR DIAMETERS INTO THE MASONRY WALL. LAPS OR SPLICES OF REINFORCING STEEL IN MASONRY SHALL BE 2'–0" OR 60 BAR DIAMETERS, WHICHEVER IS GREATER.
10. THERE SHALL BE A FOUNDATION DOWEL FOR EACH VERTICAL REINFORCING BAR, EXCEPT AS NOTED FOR JAMB BARS. FOUNDATION DOWELS FOR JAMB BARS ARE ONLY REQUIRED WHEN BAR DEVELOPMENT LENGTH DOES NOT EXIST BELOW OPENING.
11. VERTICAL WALL REINFORCING SHALL EXTEND CONTINUOUSLY FROM THE TOP OF FOUNDATION TO EMBED AT LEAST 2" BELOW TOP OF WALL.
12. AN ADDITIONAL VERTICAL BAR WITH FOUNDATION DOWEL, SAME SIZE AND LENGTH AS THE NORMAL REINFORCING BAR SHALL BE PLACED:
    A. ON EACH SIDE OF CONTROL JOINTS.
    B. AT INTERSECTION OF EXTERIOR WALLS.
    C. AT INTERSECTION OF INTERIOR WALLS WITH EXTERIOR WALLS.
13. ALL INTERIOR STRUCTURAL WALLS SHALL HAVE INTERMEDIATE BOND BEAMS LOCATED AT THE SAME LEVELS AS EXTERIOR BOND BEAMS.
14. CONTROL JOINTS SHALL NOT EXTEND THROUGH BOND BEAMS AND LINTELS. INSTEAD THE JOINT SHALL EXTEND TO THE BOTTOM OF THE BOND BEAM/LINTEL AND THEN RESUME ABOVE THE BOND BEAM/LINTEL. WHERE BOND BEAM/LINTEL ARE EXPOSED TO VIEW, SAW A VERTICAL GROOVE IN THE BOND BEAM/LINTEL, APPROXIMATELY 3/8" DEEP AND THE SAME WIDTH AS THE CONTROL JOINT, TO RESEMBLE THE CONTROL JOINT. FILL CONTROL JOINTS AND SAWED JOINT WITH SEALANT.
15. UNLESS NOTED OTHERWISE, BOND BEAMS SHALL BE CONTINUOUS AT ALL CORNERS. USE CORNER BARS SAME SIZE AND NUMBER AS BOND BEAM REINFORCING, 2'–0" EACH LEG. STAGGER HORIZONTAL LAPS IN BOND BEAMS.
16. LOCATION AND DETAILS OF CONTROL AND ISOLATION WALL JOINTS SHALL BE AS DETAILED ON ARCHITECTURAL DRAWINGS.
17. BRACE TOP OF CMU WALLS UNTIL ROOF FRAMING AND DECK ARE INSTALLED.

COLD–FORMED STEEL FRAMING (CFSF)

1. THE ADMINISTRATION/ELECTRICAL BUILDING AND CHLORINE FEED/STORAGE BUILDING ROOFS ARE COMPLETELY FRAMED WITH COLD–FORMED STEEL ROOF TRUSSES AND RELATED COMPONENTS.
2. THE DESIGN, FABRICATION, AND ERECTION OF COLD–FORMED STEEL TRUSSES AND COMPONENTS SHALL CONFORM TO AMERICAN IRON AND STEEL INSITUTE'S "SPECIFICATION FOR THE DESIGN OF COLD–FORMED STEEL STRUCTURAL MEMBERS, LATEST EDITION." DESIGN TRUSSES IN ACCORDANCE WITH AISI "DESIGN GUIDE FOR COLD–FORMED STEEL TRUSSES."
3. PROVIDE MANUFACTURER'S STEEL TRUSS MEMBERS, BRACING, BRIDGING, BLOCKING, REINFORCEMENTS, FASTENERS, AND ACCESSORIES WITH EACH TYPE OF STEEL FRAMING REQUIRED, AS RECOMMENDED BY THE MANUFACTURER FOR THE SPECIFIC APPLICATION AND AS NEEDED TO PROVIDE A COMPLETE COLD–FORMED STEEL TRUSS SYSTEM.
4. ALL FRAMING MEMBERS SHALL BE IN ACCORDANCE WITH ASTM A653, GALVANIZED, UNLESS NOTED OTHERWISE.
5. INSTALL FRAMING PLUMB, SQUARE, TRUE TO LINE AND SECURELY FASTENED AS REQUIRED.
6. COLD–FORMED STEEL MANUFACTURER SHALL BE RESPONSIBLE FOR PROVIDING SUPPORT FOR ALL MECHANICAL AND ELECTRICAL EQUIPMENT AS REQUIRED. COORDINATE SIZE AND LOCATION WITH OTHER DISCIPLINES.
7. WHEN CLIP ANGLES ARE USED TO ATTACH A COMPONENT TO THE PRIMARY STRUCTURE, THE CLIP ANGLE IS TO BE FASTENED TO THE PRIMARY STRUCTURE FIRST, THEN THE COMPONENT SHOULD BE BROUGHT TO BEAR ON THE STRUCTURE, AND THEN FASTENED TO THE CLIP ANGLE.
8. A MINIMUM OF 3/4" EDGE DISTANCE AND SCREW SPACING IS REQUIRED, UNLESS NOTED OTHERWISE ON THE DRAWINGS. SCREW PENETRATION THROUGH JOINED MATERIALS SHALL NOT BE LESS THAN 3 EXPOSED THREADS. SELECT SCREWS WITH AN ADEQUATE CUTTING TIP TO ACCOMMODATE THE TOTAL THICKNESS TO BE DRILLED. DRILLING MUST BE COMPLETED BEFORE THE THREADS ENGAGE THE MATERIAL. WHERE SCREW ATTACHMENTS ARE MADE TO FRAMING COMPONENTS OF DIFFERENT THICKNESSES THE THINNEST COMPONENT MUST BE PENETRATED FIRST.

ALUMINUM

1. ALUMINUM CONSTRUCTION SHALL CONFORM TO THE LATEST EDITION OF THE ALUMINUM CONSTRUCTION MANUAL OF THE ALUMINUM ASSOCIATION.
2. UNLESS OTHERWISE INDICATED, STRUCTURAL ALUMINUM SHALL BE ALLOY 6061–T6 AS SPECIFIED IN ASTM B308, EXCEPT RAILINGS SHALL BE 6063–T6.
3. ALUMINUM IN CONTACT WITH OR EMBEDDED IN CONCRETE OR MASONRY SURFACES SHALL BE COATED WITH A ZINC CHROMATE SYSTEM.
4. ALL BOLTS USED IN CONNECTIONS WITH ALUMINUM MEMBERS SHALL BE STAINLESS STEEL TYPE 316, UNLESS NOTED OTHERWISE.
5. ALL WELDING OF ALUMINUM STRUCTURES SHALL CONFORM TO "STRUCTURAL WELDING CODE – ALUMINUM", LATEST AWS D1.2 AND REVISIONS.

STRUCTURAL MODIFICATIONS

1. REFER TO OTHER DISCIPLINE DRAWINGS FOR RELOCATION AND DEMOLITION OF PIPING, CONDUITS, FIXTURES, INSTRUMENTS, ETC. ASSOCIATED WITH STRUCTURES SHOWN TO BE DEMOLISHED.
2. ALL DEMOLITION, REMOVAL, AND CONSTRUCTION ACTIVITIES SHALL BE CONDUCTED WITH CONSIDERATION FOR EXISTING STRUCTURES, EQUIPMENT, ETC. ANY DAMAGE WHICH MAY OCCUR BEYOND DESCRIBED DEMOLITION AND CONSTRUCTION SHALL BE REMEDIED AT CONTRACTOR'S EXPENSE AND OWNER/ENGINEER NOTIFIED.
3. CONTRACTOR SHALL REMOVE AND PROPERLY DISPOSE OF ALL DEMOLISHED CONCRETE AND OTHER MATERIALS FROM THE EXISTING STRUCTURES OFF SITE PRIOR TO THE NEW CONSTRUCTION.
4. UNLESS NOTED OTHERWISE, CUTTING EMBEDDED REBARS DUE TO PIPING, CONDUITS, OR ANY OTHER PENETRATION THROUGH EXISTING CONCRETE STRUCTURE IS PROHIBITED. CONTRACTOR SHALL DETECT THE EXISTING REBAR LOCATIONS BY NONDESTRUCTIVE TESTING METHODS AND KEEP PENETRATION AWAY FROM THE EMBEDDED REBARS.
5. WHERE REMOVING EXISTING CONCRETE BUT RETAINING REBARS IS INDICATED ON DRAWINGS, SAWCUT EXISTING CONCRETE TO THE LIMITS SHOWN ON PLANS BUT NOT MORE THAN 3/4" DEEP TO AVOID DAMAGING OR NICKING THE REINFORCING.
6. WHERE DEMOLITION OF EXISTING CONCRETE WILL LEAVE EMBEDDED EXISTING REBARS EXPOSED, AN ADDITIONAL 1–1/2" CONCRETE AND REINFORCEMENT BEYOND LIMITS OF THE DEMOLITION SHALL BE REMOVED. THE 1–1/2" AREAS BEING REMOVED SHALL THEN BE PLACED BACK WITH CONCRETE STRUCTURAL REPAIR MATERIAL AS SPECIFIED TO PROVIDE CORROSION PROTECTION FOR THE EXPOSED EXISTING REBARS, UNLESS NOTED OTHERWISE.
7. ROUGHEN THE EXISTING CONCRETE SURFACES THAT WILL ENCOUNTER NEW CONCRETE. "ROUGHENED SURFACE" SHALL HAVE A UNIFORMLY ROUGHENED CONCRETE SURFACE TO A FULL AMPLITUDE (DISTANCE BETWEEN HIGH AND LOW POINTS OR SIDE TO SIDE) OF APPROXIMATELY 1/4" WITH SUITABLE TOOLS TO EXPOSE A FRESH FACE. APPLY BONDING AGENT TO THE EXISTING CONCRETE SURFACES PRIOR TO THE PLACEMENT OF NEW CONCRETE PER MANUFACTURER'S INSTRUCTIONS.
8. ALL EXPOSED EXISTING REBARS SHALL BE CLEANED BY ABRASIVE BLASTING AND COATED WITH AN EPOXY RESIN/PORTLAND CEMENT ADHESIVE BONDING AGENT TO PROVIDE CORROSION PROTECTION.
9. REPAIR CONCRETE SPALLS AND CRACKS WHERE REQUIRED PER DETAIL 5/SD–21.

IBC CHAPTER 17 SPECIAL INSPECTION REQUIREMENTS

1. THE OWNER OR THE OWNER'S REPRESENTATIVE IS REQUIRED TO PERFORM SPECIAL INSPECTIONS IN ACCORDANCE WITH IBC 2012 AND AS OUTLINED IN THE STATEMENT OF SPECIAL INSPECTION.
2. THE CONTRACTOR IS REQUIRED TO ENABLE THE ABOVE INSPECTIONS TO OCCUR BY PROVIDING ACCESS TO THE ELEMENTS REQUIRING INSPECTION. IN ADDITION, THE CONTRACTOR SHALL PROVIDE 48 HOURS ADVANCED NOTICE TO THE OWNER OR THE OWNER'S REPRESENTATIVE REGARDING ALL CONSTRUCTION ACTIVITIES RELATED TO AND/OR AFFECTING THE REQUIRED SPECIAL INSPECTIONS.

This Record Drawing is a combination of the sealed engineering contract drawings for this project, modified by information furnished by the contractor reflecting changes in the Project made during construction. The original sealed drawings are on file at the offices of
FREESE AND NICHOLS, INC.
RECORD DRAWINGS PREPARED ON:
6/24/2020

Freese and Nichols, Inc.
Texas Registered Engineering Firm F–2144

THE SEAL APPEARING ON THIS DOCUMENT WAS AUTHORIZED BY JUSTIN L. MOSS, P.E.
TEXAS NO. 122201 DATE: 6/24/2020
IT IS A VIOLATION OF THE TEXAS ENGINEERING PRACTICE ACT FOR ANY PERSON, UNLESS ACTING UNDER THE DIRECTION OF THE RESPONSIBLE ENGINEER, TO ALTER THIS DOCUMENT IN ANY WAY. IT IS A VIOLATION OF THE TEXAS ENGINEERING PRACTICE ACT FOR ANY ENGINEER OTHER THAN THE RESPONSIBLE ENGINEER OR HIS DULY AUTHORIZED REPRESENTATIVE TO AFFIX HIS SEAL TO THIS DOCUMENT.

FREESE NICHOLS
4040 Broadway Street, Suite 600
San Antonio, Texas 78209–6350
Phone – (210) 298–8000
Fax – (210) 298–9801
Web – www.freese.com

CITY OF CASTROVILLE

WWTP CAPACITY EXPANSION PROJECT

STRUCTURAL

GENERAL

STRUCTURAL GENERAL NOTES #2

NO.	ISSUE	BY	DATE
1	RECORD DRAWING	MRR	06/24/20
0	ISSUED FOR CONSTRUCTION	MRR	11/16/16

FAN JOB NO. CVL14259
DATE 6/10/16
DESIGNED MRR
DRAWN JLM
REVISED
CHECKED AD
FILE NAME ST–CVL–GN–NOTE02.dwg

VERIFY SCALE Bar is one inch on original drawing. If not one inch on this sheet, adjust scale.
0 1"

SHEET G–S2
SEQ.

ACAD Rel: 21.0s (LMS Tech)
Filename: N:\ST\ST–CVL–GN–NOTE02.dwg
Last Saved: 6/18/2020 10:34 AM Saved By: 02198

Plot Date: 6/18/2020 11:11 AM Plot By: 02198 Filename: N:\ST\ST–CVL–GN–NOTE02.dwg

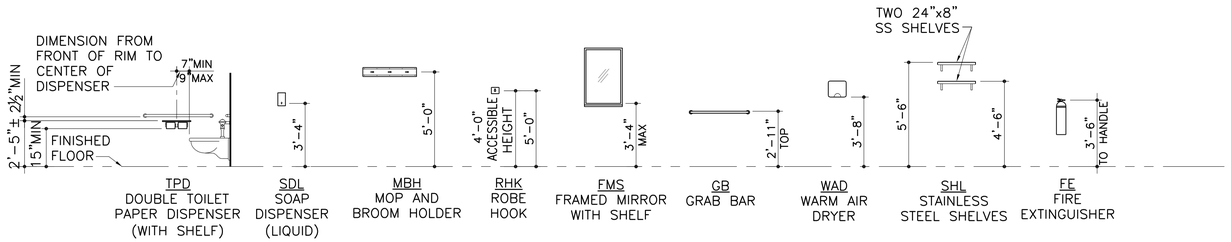

TOILET ACCESSORY MOUNTING HEIGHTS

1/4"=1'-0"

GENERAL NOTES:

1. ALL FIXTURE HEIGHTS AND MOUNTING DIMENSIONS SHALL COMPLY WITH REQUIREMENTS OF TAS (ADA). CONTRACTOR MUST VERIFY EACH SUCH DIMENSION.
2. ALL DOOR DIMENSIONS ARE CLEAR, FROM EDGE OF DOOR STOP TO EDGE OF DOOR IN 90° OPEN POSITION.
3. FAUCETS FOR LAVATORIES SHALL HAVE LEVER HANDLES.
4. ANGLE STOPS, RISERS, TAIL PIECES & P-TRAPS NOT OTHERWISE ENCLOSED BY CABINETS OR OTHER ENCLOSURES SHALL HAVE ADA PROTECTIVE COVERS.
5. TOILET PARTITION DOORS AT ACCESSIBLE STALL MUST HAVE A MINIMUM CLEARANCE OF 32".

NOTES BY SYMBOL "⬡"

1. OPERATING HANDLE ON FLUSH TANK OR FLUSH VALVE WC MUST BE FURNISHED EITHER RIGHT OR LEFT HANDED SO THAT HANDLE OCCURS ON WIDE SIDE OF STALL OR SPACE AND SHALL BE MOUNTED BELOW THE GRAB BAR.
2. GRAB BARS AND ASSOCIATED BLOCKING, ANCHORS, AND FASTENERS SHALL BE CAPABLE OF RESISTING A DOWNWARD FORCE OF 250 LBS. APPLIED AT ANY POINT ALONG THE HANDRAIL.

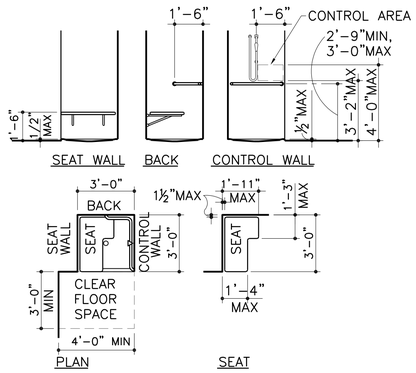

ACCESSIBLE SHOWER (36"x36")

1/4"=1'-0"

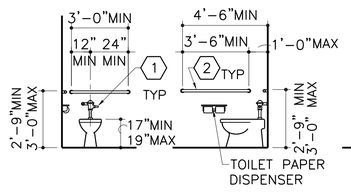

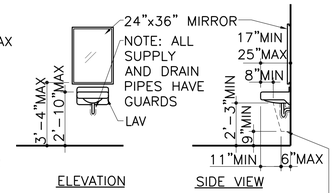

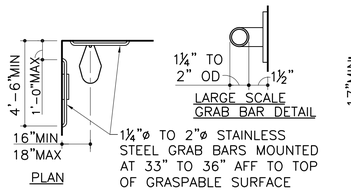

ACCESSIBLE TOILET TYPICAL DIMENSIONS

1/4"=1'-0"

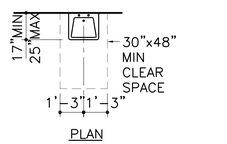

ACCESSIBLE WALL HUNG LAV

1/4"=1'-0"

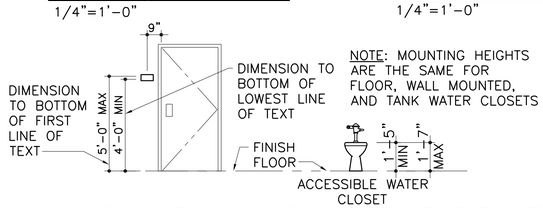

ACCESSIBLE SIGNAGE MOUNTING LOCATION

1/4"=1'-0"

ACCESSIBLE TOILET MOUNTING HEIGHT

1/4"=1'-0"

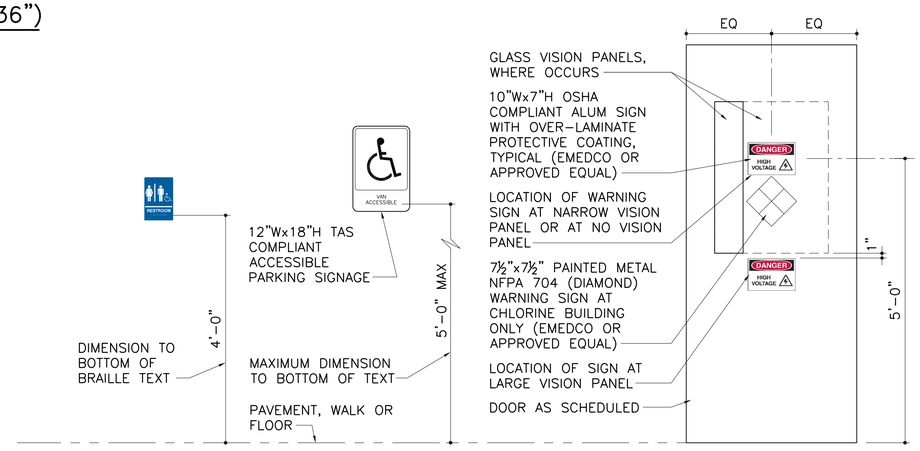

ACCESSIBLE RESTROOM SIGNAGE

3/4"=1'-0"

ACCESSIBLE PARKING SIGNAGE

3/4"=1'-0"

OSHA COMPLIANT WARNING SIGNAGE

3/4"=1'-0"

PLAN GRAPHICS

REFERENCE

DETAIL NUMBER
DETAIL REFERENCE
SHEET ON WHICH DETAIL IS REFERENCED OR SHEET ON WHICH DETAIL IS DRAWN
1 / A-12

DRAWING NUMBER
DRAWING TITLE
SHEET ON WHICH DRAWING IS REFERENCED FROM
1 / A-2
DRAWING
1"=1'-0"

SYMBOLS

EXISTING
NEW CONSTRUCTION
DEMOLITION
NOTE BY SYMBOL ①
DOOR DESIGNATION 101A
ELEVATION REFERENCE 1/A-2
SECTION REFERENCE 1/A-2
REVISION NUMBER ①
NORTH ARROW NORTH
PARTITION TYPE MARK Ⓐ
OPENING TYPE MARK Ⓐ
ACCESSORY KEY MBH

CODE DATA

CURRENT CITY OF CASTROVILLE BUILDING CODES	2012 INTERNATIONAL BUILDING CODE (IBC) 2012 INTERNATIONAL MECHANICAL CODE 2012 INTERNATIONAL PLUMBING CODE 2012 INTERNATIONAL FUEL GAS CODE 2014 NATIONAL ELECTRICAL CODE 2015 INTERNATIONAL ENERGY CONSERVATION CODE (STATE MANDATE)
PROJECT: PROJECT ADDRESS:	WWTP CAPACITY EXPANSION PROJECT 816 ALSACE AVENUE CASTROVILLE, TX. 78009
OWNER CONTACT:	LARRY HEINRICH CITY OF CASTROVILLE PUBLIC WORKS DIRECTOR 703 PARIS ST. CASTROVILLE, TX 78009 830-931-4090 LARRY.HEINRICH@CASTROVILLETX.GOV
OCCUPANCIES:	F-1, FACTORY INDUSTRIAL (IBC SEC 306.2) B, BUSINESS GROUP (IBC SEC 304) H-4, HIGH HAZARD (IBC SEC 307.6)
OCCUPANCY SEPARATION REQUIRED AT ADMIN BUILDING (F-1, B):	NO SEPARATION REQUIRED (IBC TABLE 508.4)
ADMINISTRATION BUILDING AREA:	1,064 SQUARE FEET GROSS
CHLORINE BUILDING (H-4) AREA:	209 SQUARE FEET GROSS
CONSTRUCTION TYPE:	TYPE II-B (IBC TABLE 601) (NON-COMBUSTIBLE)
EGRESS/OCCUPANT LOAD:	INDUSTRIAL - 100 GROSS (IBC TABLE 1004.1.1) ADMIN BLDG = 11
NUMBER OF EXITS REQUIRED:	1-500 = 2 EXITS (IBC SECTION 1021.1)
AUTOMATIC FIRE SUPPRESSION:	NONE (IN EITHER BUILDING)

ARCHITECTURAL ABBREVIATIONS

AFF	ABOVE FINISH FLOOR	MAT	MATERIAL
ALUM	ALUMINUM	MAX	MAXIMUM
BLDG	BUILDING	MECH	MECHANICAL
C/C	CENTER TO CENTER	MFR	MANUFACTURER
CMU	CONCRETE MASONRY UNIT	MIN	MINIMUM
CONC	CONCRETE	NOM	NOMINAL
COND	CONDITION	OC	ON CENTER
CONT	CONTINUOUS	OH	OPPOSITE HAND
DIA, ø	DIAMETER	OSHA	OCCUPATIONAL SAFETY AND HEALTH ADMINISTRATION
DIM	DIMENSION		
ELEC	ELECTRIC(AL)		
ELEV	ELEVATION	REINF	REINFORCING
EJ	EXPANSION JOINT	SCHED	SCHEDULE
EQ	EQUAL, EQUALLY	SIM	SIMILAR
EXP	EXPANSION	SS	STAINLESS STEEL
EXST	EXISTING	STL	STEEL
FD	FLOOR DRAIN	TAS	TEXAS ACCESSIBILITY STANDARDS
FF	FINISH FLOOR		
FT	FOOT, FEET	THRU	THROUGH
FRP	FIBER REINFORCED POLYMER	TOM	TOP OF MASONRY
GALV	GALVANIZE OR GALVANIZED	TOS	TOP OF STEEL
H	HEIGHT OR HIGH	TYP	TYPICAL
HM	HOLLOW METAL	UL	UNDERWRITERS LABORATORIES
HORZ	HORIZONTAL, HORIZONTALLY		
L	LONG, LENGTH	VERT	VERTICAL, VERTICALLY
MAS	MASONRY	W	WIDE, WIDTH

ARCHITECTURAL GENERAL NOTES

1. ALL DIMENSIONS ARE GIVEN TO:
   A. FACE OF CONCRETE.
   B. CENTER LINE OF COLUMNS WHERE INDICATED.
   C. CONCRETE FLOOR LINE.
   D. FINSH FACE OF GYPSUM BOARD FURRING OR PARTITION.
2. THE TERM "SMACNA" REFERS TO SHEET METAL AND AIR CONDITIONING CONTRACTORS' NATIONAL ASSOCIATION ARCHITECTURAL SHEET METAL MANUAL, SIXTH EDITION.
3. DIMENSIONS ON PLANS ARE NOMINAL; ACTUAL DIMENSIONS ARE SHOWN ON DETAILS.
4. ISOLATE FERROUS METALS FROM CONTACT WITH NON-FERROUS METALS.
5. ISOLATE PRESERVATIVE TREATED WOOD FROM CONTACT WITH ALL METALS.
6. REFER TO SHEET AD-A2 FOR ARCHITECTURAL FINISHES.
7. WASTE WATER TREATMENT PLANTS ARE CORROSIVE ENVIRONMENTS - NON-GALVANIZED FERROUS METALS EXPOSED TO THE ATMOSPHERE ARE NOT ALLOWED.
8. REFER TO SHEET G-A4 FOR PARTITION TYPES.

This Record Drawing is a combination of the sealed engineering contract drawings for this project, modified by information furnished by the contractor reflecting changes in the Project made during construction. The original sealed drawings are on file at the offices of FREESE AND NICHOLS, INC.
RECORD DRAWINGS PREPARED ON: 06/24/2020

0 6" 1' 2'
3/4"=1'-0
0 1' 2' 4' 8'
1/4"=1'-0"

Freese and Nichols, Inc.
Texas Registered Engineering Firm F-2144

THE SEAL THAT ORIGINALLY APPEARED ON THIS DOCUMENT WAS AUTHORIZED BY:
PARRIS K. JONES
TEXAS NO. 19268 ON DATE: 11/15/2016
ALTERATION OF A SEALED DOCUMENT WITHOUT PROPER NOTIFICATION OF THE RESPONSIBLE ARCHITECT IS AN OFFENSE UNDER THE TEXAS BOARD OF ARCHITECTURAL EXAMINERS' PRACTICE ACT.

FREESE NICHOLS
4040 Broadway, Street, Suite 600
San Antonio, Texas 78209-6350
Phone: (210) 298-8000
Fax: (210) 298-8001
Web - www.freese.com

CITY OF CASTROVILLE

WWTP CAPACITY EXPANSION PROJECT

ARCHITECTURE

ADMINISTRATION AND CHLORINE BUILDINGS CODE DATA AND GENERAL INFORMATION

FAN JOB NO.	CVL14259
DATE	6/10/16
DESIGNED	FKJ
DRAWN	NEL
CHECKED	JWW
REVISED	-
DATE	06/24/20
BY	NEL
FILE NAME	Ar-Bld-Gn-Note.dwg
NO.	ISSUE
1	RECORD DRAWINGS

VERIFY SCALE Bar is one inch on original drawing. If not one inch on this sheet, adjust scale.

SHEET G-A1

SEQ.

ACAD Rel: 21.0s (LMS Tech)
Filename: N:\ARC\Ar-Bld-Gn-Note.dwg
Last Saved: 6/22/2020 11:35 AM Saved By: nel
Plot Date: 6/22/2020 11:57 AM Plot By: nel Filename: N:\ARC\Ar-Bld-Gn-Note.dwg

DOOR AND FRAME SCHEDULE

MARK	DOOR DESCRIPTION SIZE WIDTHxHEIGHT	MAT	TYPE	FRAME DESCRIPTION MAT	TYPE	DOOR DETAILS HEAD	JAMB	JAMB	SILL	UL LABEL	HARD-WARE NUMBER	REMARKS
ADMINISTRATION BUILDING												
A01A	1@3'-0"x7'-0"; 1@2'-8"x7'-0"	ALUM	A, C	ALUM	F1	1/G-A2	2/G-A2	–	4/G-A2	–	6	1, 2
A01B	3'-0"x7'-0"	ALUM	A	ALUM	F2	1/G-A2	2/G-A2	3/G-A2	4/G-A2	–	4	2
A01C	3'-0"x7'-0"	SS	D	SS	F3	5/G-A2	5/G-A2	–	6/G-A2	20 MIN	3	2
A02	3'-0"x7'-0"	ALUM	A	ALUM	F1	7/G-A2	7/G-A2	–	–	–	2	
A03	3'-0"x7'-0"	ALUM	B	ALUM	F1	7/G-A2	7/G-A2	–	–	–	1	
A04A	1@3'-0"x9'-0"; 1@2'-8"x9'-0"	ALUM	A, C	ALUM	F1	1/G-A2	2/G-A2	–	4/G-A2	–	6	1, 2
A04B	3'-0"x7'-0"	ALUM	A	ALUM	F2	1/G-A2	2/G-A2	3/G-A2	4/G-A2	–	4	2
CHLORINE BUILDING												
C01	3'-0"x7'-0"	ALUM	A	ALUM	F2	1/G-A2	2/G-A2	3/G-A2	4/G-A2	–	5	2
C02	3'-0"x7'-0"	ALUM	A	ALUM	F2	1/G-A2	2/G-A2	3/G-A2	4/G-A2	–	5	2

DOOR GENERAL NOTES:

1. ALL DOORS ARE 1¾" THICK UNLESS NOTED OTHERWISE.

DOOR REMARKS:

1. 3'-0" DOOR IS THE ACTIVE LEAF, DOOR TYPE A.
2. INSULATED DOOR.

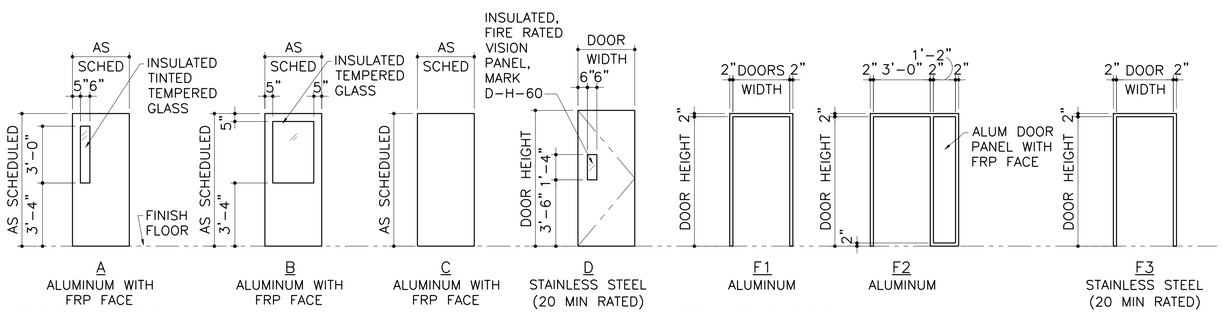

DOOR TYPES

1/4"=1'-0"

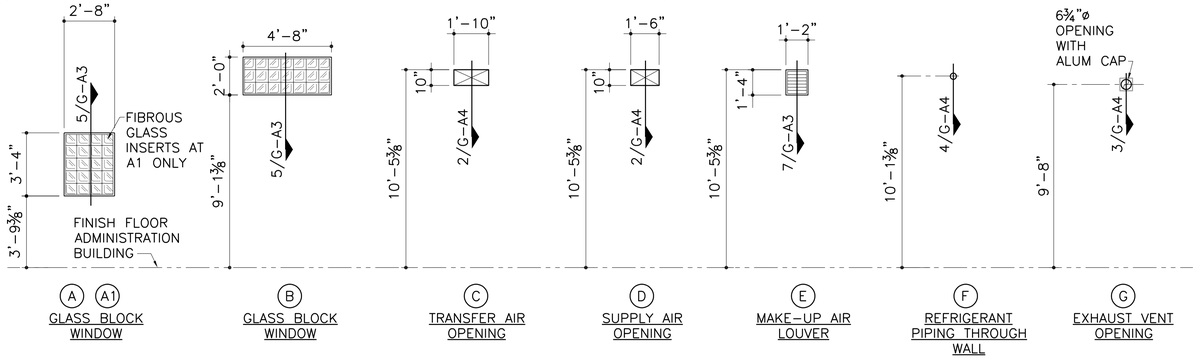

FRAME TYPES

1/4"=1'-0"

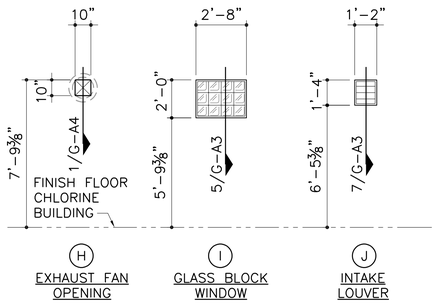

OPENING TYPES

1/4"=1'-0"

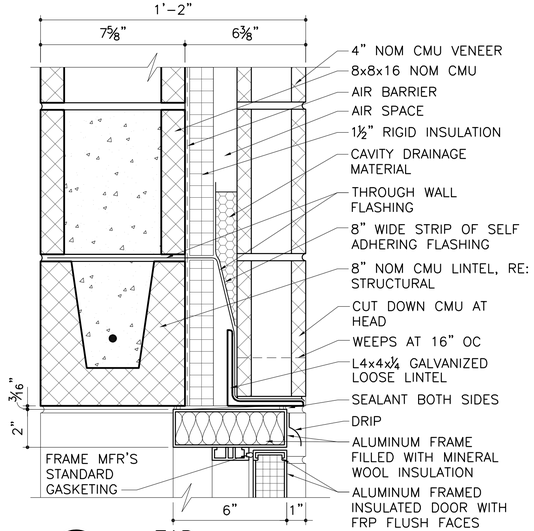

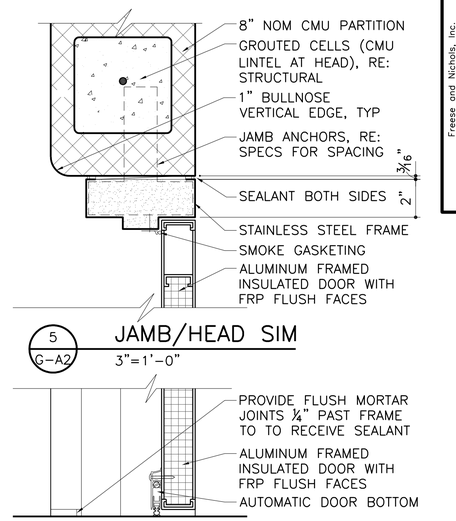

This Record Drawing is a combination of the sealed engineering contract drawings for this project, modified by information furnished by the contractor reflecting changes in the Project made during construction. The original sealed drawings are on file at the offices of FREESE AND NICHOLS, INC.
RECORD DRAWINGS PREPARED ON: 06/24/2020

0 1" 2" 4" 8"
3"=1'-0"

0 1' 2' 4' 8'
1/4"=1'-0"

Freese and Nichols, Inc.
Texas Registered Engineering Firm F-2144

THE SEAL THAT ORIGINALLY APPEARED ON THIS DOCUMENT WAS AUTHORIZED BY:
PARRIS K. JONES
TEXAS NO. 19268 ON DATE: 11/15/2016
ALTERATION OF A SEALED DOCUMENT WITHOUT PROPER NOTIFICATION OF THE RESPONSIBLE ARCHITECT IS AN OFFENSE UNDER THE TEXAS BOARD OF ARCHITECTURAL EXAMINERS' PRACTICE ACT.

FREESE NICHOLS
4040 Broadway Street, Suite 600
San Antonio, Texas 78209-6350
Phone: (210) 829-3800
Fax: (210) 298-3801
Web - www.freese.com

CITY OF CASTROVILLE
WWTP CAPACITY EXPANSION PROJECT
ARCHITECTURE
ADMINISTRATION AND CHLORINE BUILDINGS
OPENINGS SCHEDULE AND DETAILS

FAN JOB NO. CVL14259
DATE 6/10/16
DESIGNED PKJ
DRAWN NEL
CHECKED JWW

NO.	ISSUE	BY	DATE
1	RECORD DRAWINGS	NEL	06/24/20

FILE NAME Ar-Bld-Sh-Door.dwg

VERIFY SCALE Bar is one inch on original drawing. If not one inch on this sheet, adjust scale.
0 1"

SHEET G-A2
SEQ.

ACAD Rel: 21.0s (LMS Tech)
Filename: N:\ARC\Ar-Bld-Sh-Door.dwg
Last Saved: 6/22/2020 11:36 AM Saved By: nel

Plot Date: 6/22/2020 11:58 AM Plot By: nel Filename: N:\ARC\Ar-Bld-Sh-Door.dwg

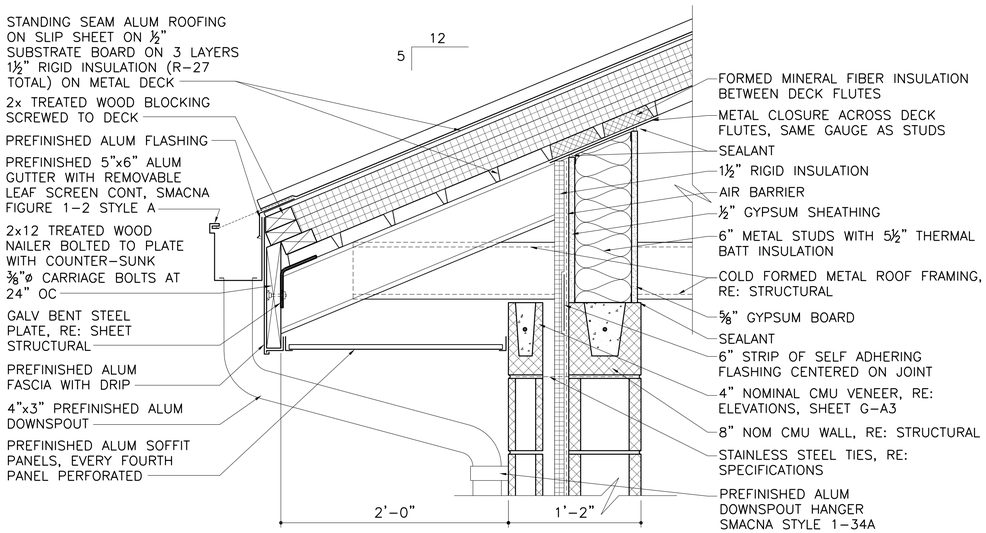

1 AD-A3 **EAVE**
1 1/2"=1'-0"

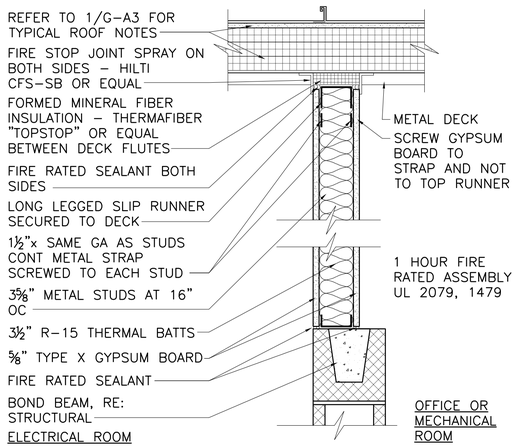

4 AD-A3 **AREA SEPARATION WALL**
1 1/2"=1'-0"

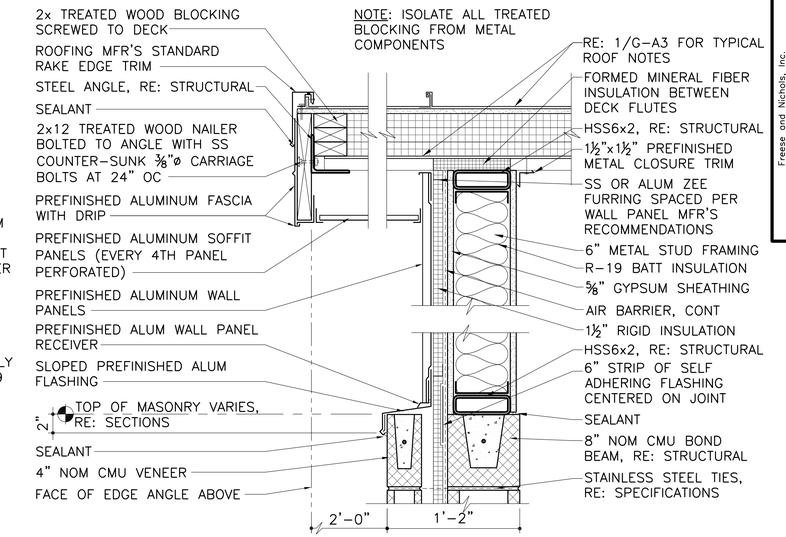

6 AD-A3 **RAKE EDGE**
1 1/2"=1'-0"



2 AD-A3 **WATER TABLE**
1 1/2"=1'-0"

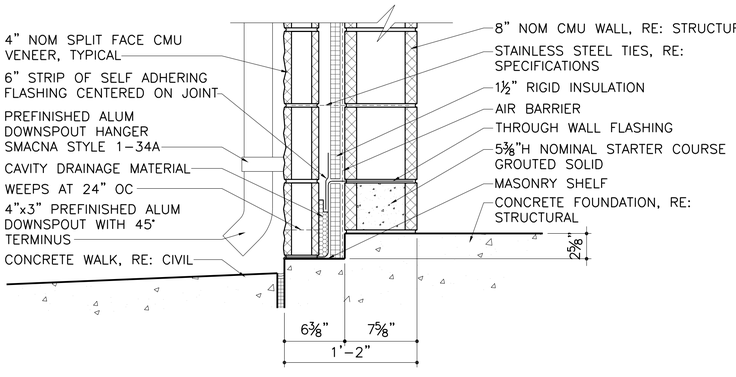

3 AD-A3 **WALL BASE**
1 1/2"=1'-0"

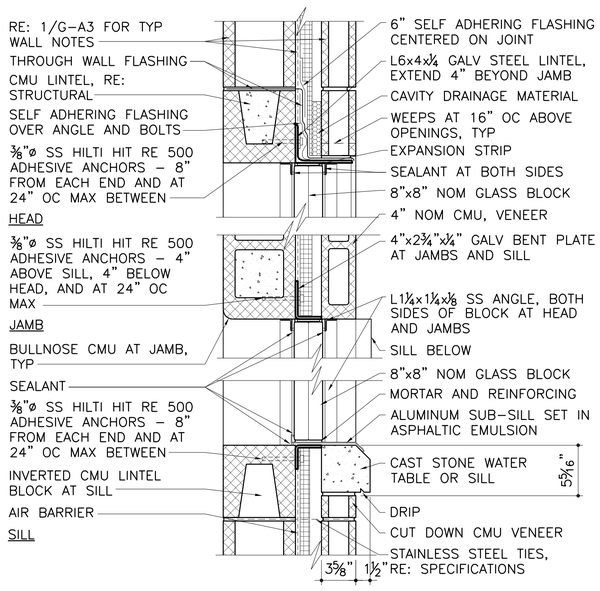

5 G-A2 **GLASS BLOCK WINDOW**
1 1/2"=1'-0"

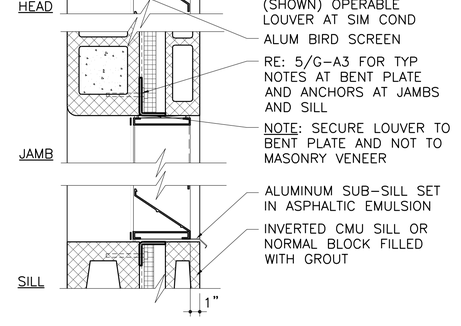

7 G-A2 **LOUVER**
1 1/2"=1'-0"

This Record Drawing is a combination of the sealed engineering contract drawings for this project, modified by information furnished by the contractor reflecting changes in the Project made during construction. The original sealed drawings are on file at the offices of
FREESE AND NICHOLS, INC.
RECORD DRAWINGS PREPARED ON:
06/24/2020

0 4" 8" 1'
1-1/2"=1'-0"

Freese and Nichols, Inc.
Texas Registered Engineering Firm F-2144

THE SEAL THAT ORIGINALLY APPEARED ON THIS DOCUMENT WAS AUTHORIZED BY:
PARRIS K. JONES
TEXAS NO. 19268 ON DATE: 11/15/2016
THIS DOCUMENT WAS ISSUED AND SEALED WITHOUT PROPER NOTIFICATION OF THE RESPONSIBLE ARCHITECT IS AN OFFENSE UNDER THE TEXAS BOARD OF ARCHITECTURAL EXAMINERS' PRACTICE ACT.

FREESE NICHOLS
4040 Broadway Street, Suite 600
San Antonio, Texas 78209-6350
Phone - (210) 829-3800
Fax - (210) 298-3801
Web - www.freese.com

CITY OF CASTROVILLE
WWTP CAPACITY EXPANSION PROJECT
ARCHITECTURE
BUILDING DETAILS I

F&N JOB NO. CVL14259
DATE 6/10/16
DESIGNED PKJ
DRAWN NEL
CHECKED JWW

NO.	ISSUE	BY	DATE
1	RECORD DRAWINGS	NEL	06/24/20

FILE NAME Ar-All-Dt-Bldg.dwg

VERIFY SCALE Bar is one inch on original drawing. If not one inch on this sheet, adjust scale.
0 1"

SHEET G-A3
SEQ.

ACAD Rel: 21.0s (LMS Tech)
Filename: N:\ARC\Ar-All-Dt-Bldg.dwg
Last Saved: 6/22/2020 11:37 AM Saved By: nel
Plot Date: 6/22/2020 11:58 AM Plot By: nel Filename: N:\ARC\Ar-All-Dt-Bldg.dwg

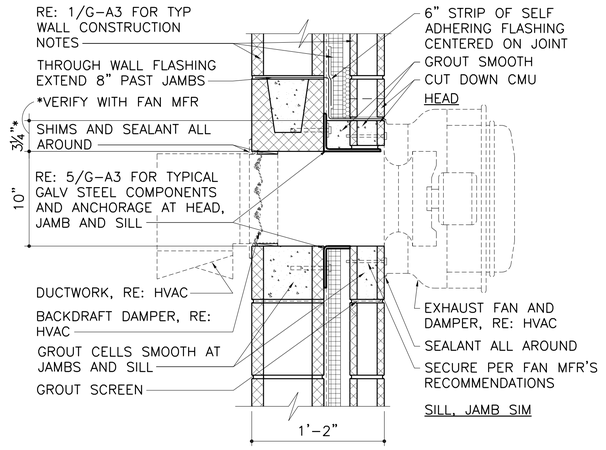

1 G-A2 EXHAUST FAN
1 1/2"=1'-0"

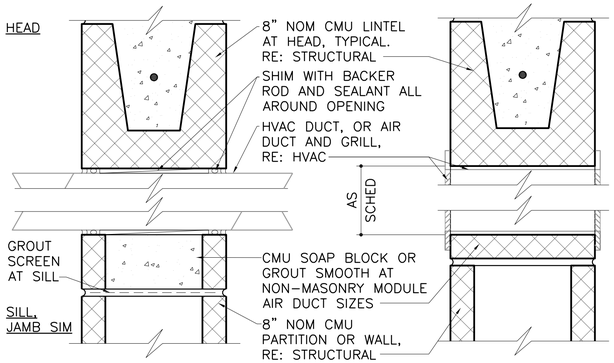

2 G-A2 DUCT THROUGH WALL
3"=1'-0"

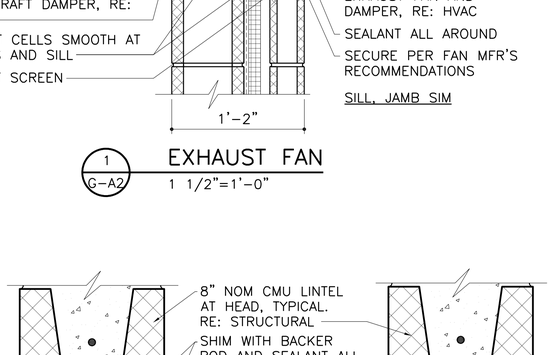

3 G-A4 EXHAUST DUCT OPENING
1 1/2"=1'-0"

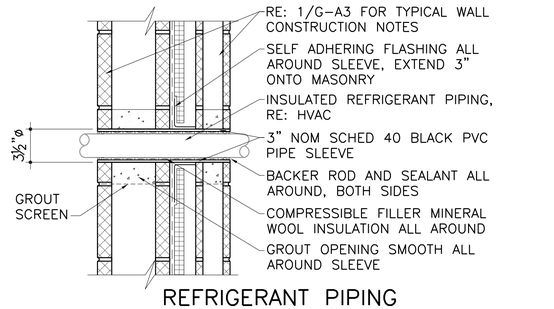

4 G-A4 REFRIGERANT PIPING THROUGH WALL
1 1/2"=1'-0"

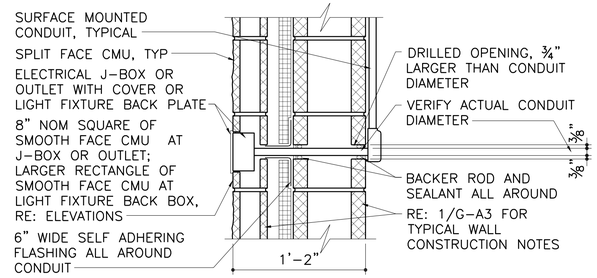

5 AD-A3 CONDUIT THROUGH WALL
1 1/2"=1'-0"

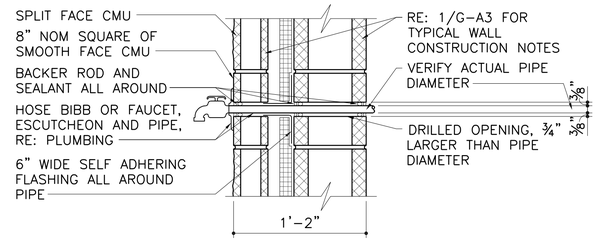

6 AD-A3 PIPE THROUGH WALL
1 1/2"=1'-0"

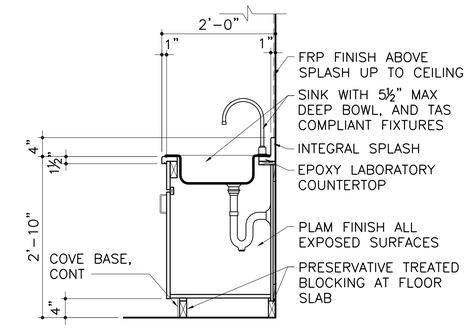

7 G-A2 ACCESSIBLE SINK
3/4"=1'-0"

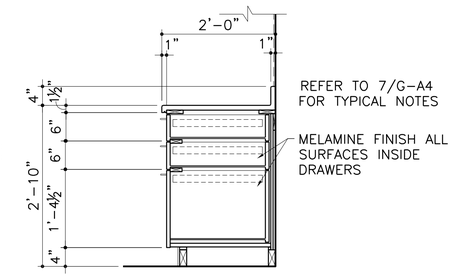

8 G-A2 CABINET
3/4"=1'-0"

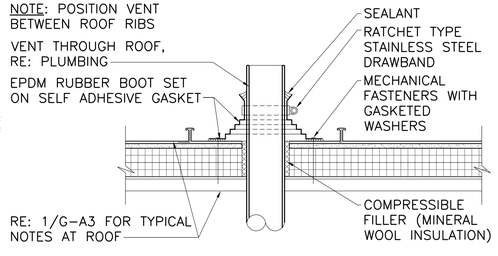

9 AD-A3 VENT THROUGH ROOF
1 1/2"=1'-0"

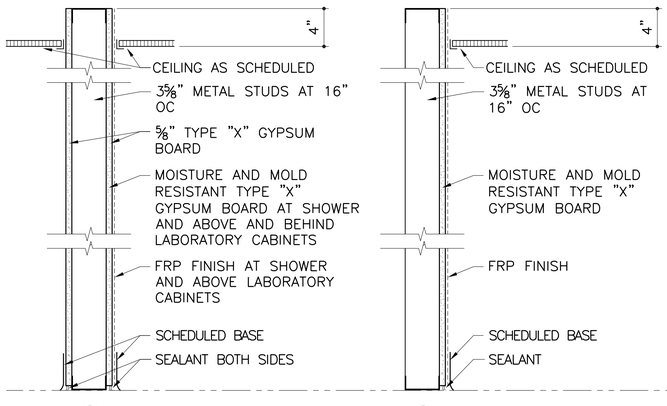

PARTITION TYPES
1 1/2"=1'-0"

This Record Drawing is a combination of the sealed engineering contract drawings for this project, modified by information furnished by the contractor reflecting changes in the Project made during construction. The original sealed drawings are on file at the offices of FREESE AND NICHOLS, INC.
RECORD DRAWINGS PREPARED ON: 06/24/2020

0 1" 2" 4" 8"
3"=1'-0"
0 4" 8" 1'
1-1/2"=1'-0"
0 6" 1' 2'
3/4"=1'-0

Freese and Nichols, Inc.
Texas Registered Engineering Firm F-2144

THE SEAL THAT ORIGINALLY APPEARED ON THIS DOCUMENT WAS AUTHORIZED BY:
PARRIS K. JONES
TEXAS NO. 19268 ON DATE: 11/15/2016
ALTERATION OF A SEALED DOCUMENT WITHOUT PROPER NOTIFICATION OF THE RESPONSIBLE ARCHITECT IS AN OFFENSE UNDER THE TEXAS BOARD OF ARCHITECTURAL EXAMINERS' PRACTICE ACT.

FREESE NICHOLS
4040 Broadway Street, Suite 600
San Antonio, Texas 78209-6350
Phone - (210) 824-3600
Fax - (210) 298-3801
Web - www.freese.com

CITY OF CASTROVILLE
WWTP CAPACITY EXPANSION PROJECT
ARCHITECTURE
BUILDING DETAILS II AND PARTITION TYPES

FAN JOB NO.	CVL14259
DATE	6/10/16
DESIGNED	PKJ
DRAWN	NEL
CHECKED	JWW

NO.	ISSUE	BY	DATE
1	RECORD DRAWINGS	NEL	06/24/20

FILE NAME Ar-All-Dt-Bldgll.dwg

VERIFY SCALE Bar is one inch on original drawing. If not one inch on this sheet, adjust scale.

SHEET G-A4
SEQ.

ACAD Rel: 21.0s (LMS Tech)
Filename: N:\ARC\Ar-All-Dt-Bldgll.dwg
Last Saved: 6/22/2020 11:42 AM Saved By: nel

Plot Date: 6/22/2020 11:59 AM Plot By: nel Filename: N:\ARC\Ar-All-Dt-Bldgll.dwg

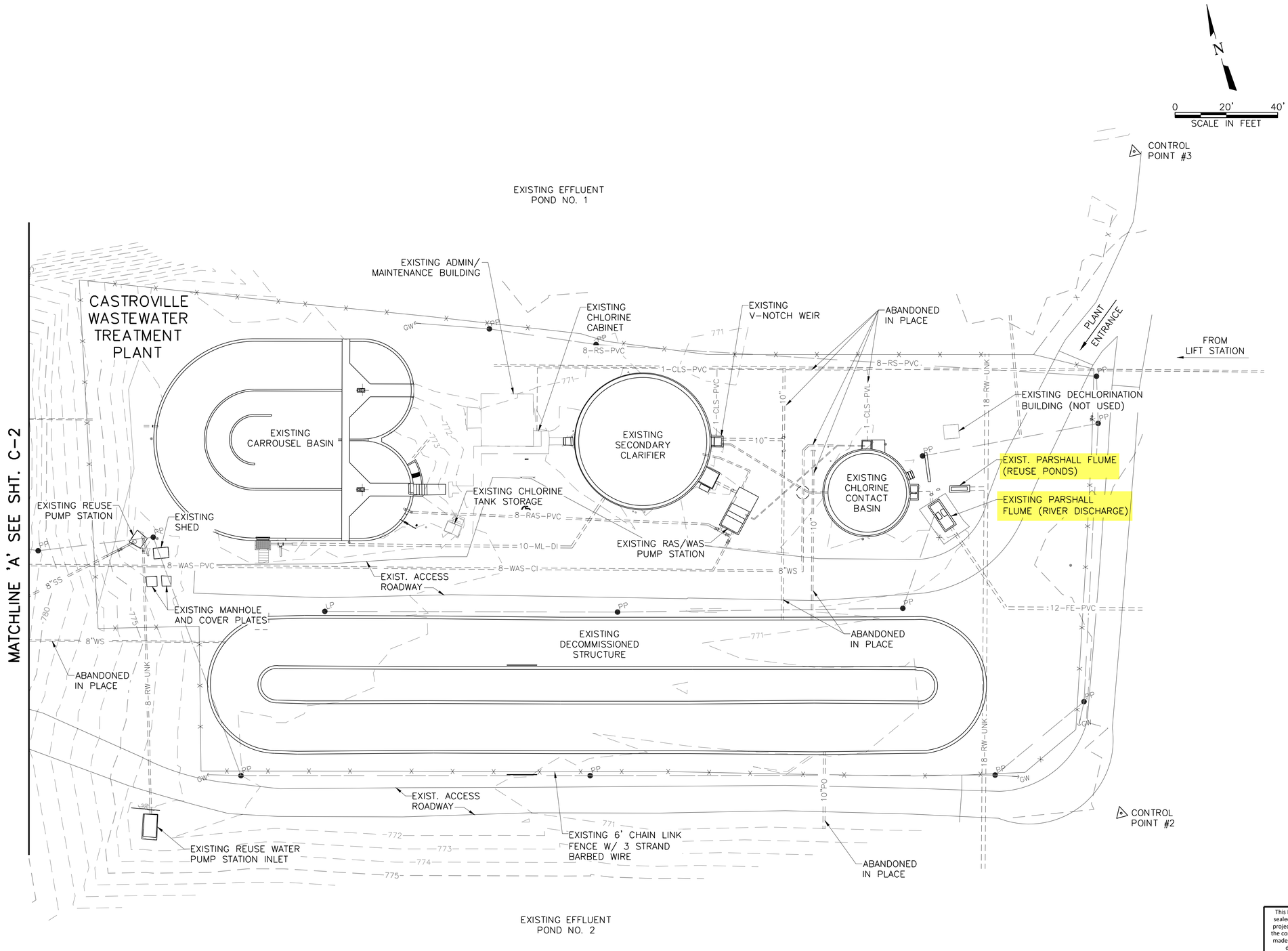

This Record Drawing is a combination of the sealed engineering contract drawings for this project, modified by information furnished by the contractor reflecting changes in the Project made during construction. The original sealed drawings are on file at the offices of
FREESE AND NICHOLS, INC.
RECORD DRAWINGS PREPARED ON: 06/24/20

CONTROL POINT TABLE

NO.	NORTHING	EASTING	ELEVATION	DESCRIPTION
2	13674467.08	2005809.53	769.31	1/2" IRON ROD
3	13674714.65	2005881.84	769.27	1/2" IRON ROD

LEGEND:

△ SURVEY CONTROL POINT

Freese and Nichols, Inc.
Texas Registered Engineering Firm F-2144

THE SEAL THAT ORIGINALLY APPEARED ON THIS DOCUMENT WAS AUTHORIZED BY CORY C. GEE, P.E. TEXAS NO. 118865 ON 08/10/2016. ALTERATION OF A SEALED DOCUMENT WITHOUT PROPER NOTIFICATION OF THE RESPONSIBLE ENGINEER IS AN OFFENSE UNDER THE TEXAS ENGINEERING PRACTICE ACT.

FREESE AND NICHOLS
4040 Broadway Street, Suite 600
San Antonio, Texas 78209-6350
Phone - (210) 298-3800
Fax - (210) 298-3801
Web - www.freese.com

CITY OF CASTROVILLE
WWTP CAPACITY EXPANSION PROJECT
CIVIL
EXISTING PLANT LAYOUT 1 OF 2

NO.	ISSUE	BY	DATE
2	RECORD DRAWING	CCG	06/24/20
1	ISSUED FOR CONSTRUCTION	CCG	11/16/16

F&N JOB NO. CVL14259
DATE 6/10/16
DESIGNED CCG
DRAWN DDH
REVISED
CHECKED TWS
FILE NAME GN-EX-OVRL01.dwg

VERIFY SCALE Bar is one inch on original drawing. If not one inch on this sheet, adjust scale.

SHEET C-1
SEQ.

ACAD Rel: 21.0s (LMS Tech)
Filename: N:\STANDARD\GN-EX-OVRL01.dwg
Last Saved: 10/9/2019 11:17 AM Saved By: 03576

Plot Date: 6/18/2020 4:49 PM Plot By: 90119 Filename: N:\STANDARD\GN-EX-OVRL01.dwg

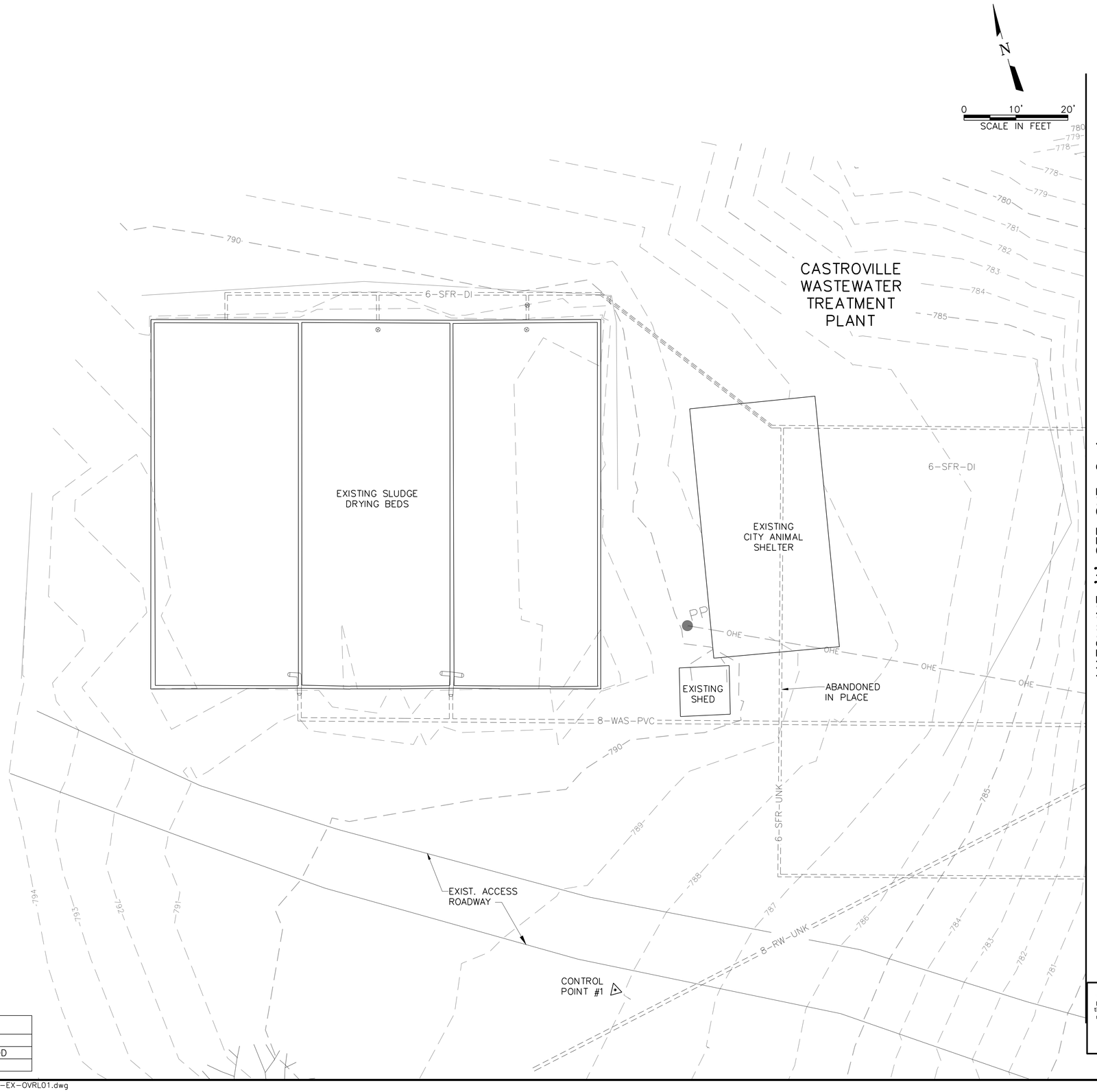

LEGEND:

△ SURVEY CONTROL POINT

CONTROL POINT TABLE				
NO.	NORTHING	EASTING	ELEVATION	DESCRIPTION
1	13674646.09	2005323.84	788.19	1/2" IRON ROD

This Record Drawing is a combination of the sealed engineering contract drawings for this project, modified by information furnished by the contractor reflecting changes in the Project made during construction. The original sealed drawings are on file at the offices of FREESE AND NICHOLS, INC.
RECORD DRAWINGS PREPARED ON: 06/24/20

Freese and Nichols, Inc.
Texas Registered Engineering Firm F-2144

THE SEAL THAT ORIGINALLY APPEARED ON THIS DOCUMENT WAS AUTHORIZED BY CORY A. GEE, P.E. TEXAS NO. 118865 ON 08/10/2016. ALTERATION OF A SEALED DOCUMENT WITHOUT PROPER NOTIFICATION OF THE RESPONSIBLE ENGINEER IS AN OFFENSE UNDER THE TEXAS ENGINEERING PRACTICE ACT.

FREESE AND NICHOLS
4040 Broadway Street, Suite 600
San Antonio, Texas 78209-6350
Phone - (210) 298-3800
Fax - (210) 298-3801
Web - www.freese.com

CITY OF CASTROVILLE
WWTP CAPACITY EXPANSION PROJECT
CIVIL
EXISTING PLANT LAYOUT 2 OF 2

NO.	ISSUE	BY	DATE
2	RECORD DRAWING	CCG	06/24/20
1	ISSUED FOR CONSTRUCTION	CCG	11/16/16

F&N JOB NO. CVL14259
DATE 6/10/16
DESIGNED CCG
DRAWN KV
REVISED
CHECKED TWS
FILE NAME GN-EX-OVRL01.dwg

VERIFY SCALE 0 1
Bar is one inch on original drawing. If not one inch on this sheet, adjust scale.

SHEET C-2
SEQ.

ACAD Rel: 21.0s (LMS Tech)
Filename: N:\STANDARD\GN-EX-OVRL01.dwg
Last Saved: 10/9/2019 11:17 AM Saved By: 03576

Plot Date: 6/18/2020 4:49 PM Plot By: 90119 Filename: N:\STANDARD\GN-EX-OVRL01.dwg

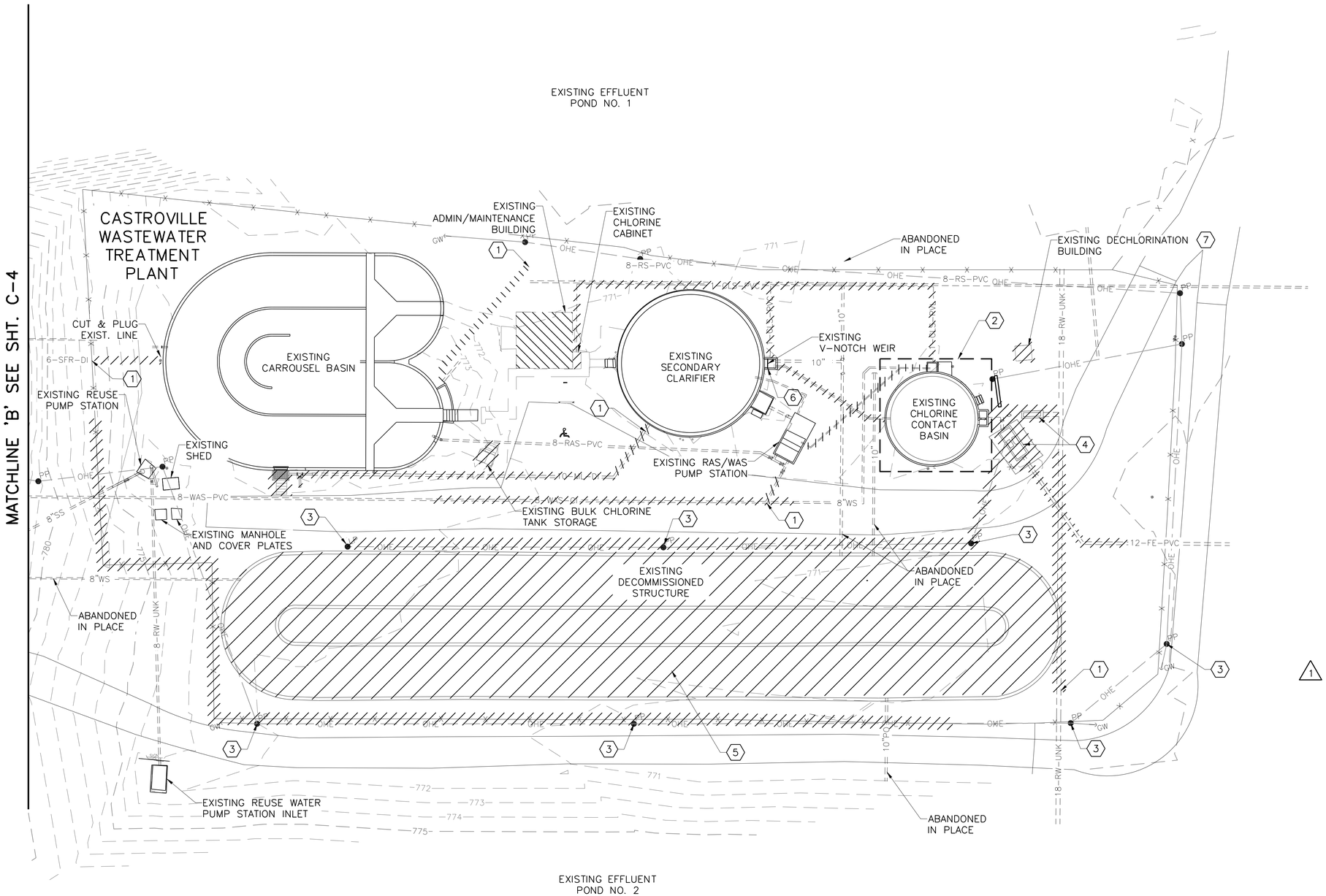

0 20' 40'
SCALE IN FEET

NOTES:

1. REFER TO SPECIFICATION SECTION 01 35 00 FOR SPECIAL PROCEDURES AND CONSTRUCTION SEQUENCING.
2. REMOVE AND DISPOSE OF GRAVEL AND/OR CONCRETE FOUNDATION OF STRUCTURES DESIGNATED FOR DEMOLITION. DEMOLISHED CONCRETE AND GRAVEL MAY BE DISPOSED OF ONSITE AT A LOCATION SPECIFIED BY THE CITY AT NO COST.
3. FILL ALL AREAS REMAINING AFTER THE DEMOLITION OF ANY STRUCTURE. USE NATIVE SOIL IN AREAS WHERE NO NEW CONSTRUCTION IS LOCATED. USE SELECT BACKFILL OR LEAN CONCRETE IN AREAS UNDER NEW STRUCTURES AND PAVEMENT. GRADE AREA TO PROVIDE DRAINAGE.
4. ELECTRICAL DEMOLITION IS AS SHOWN ON THE ELECTRICAL SHEET E-3.
5. MAINTAIN AND PROTECT ALL STRUCTURES, BUILDINGS, PIPE, VALVES, AND CONCRETE WORK NOT SHOWN TO BE DEMOLISHED.
6. ALL PIPING DESIGNATED AS "ABANDONED IN PLACE" MAY BE DEMOLISHED AS NEEDED BY THE CONTRACTOR.
7. FOR SECTIONS OF EXISTING PIPE THAT ARE DEMOLISHED OR ABANDONED. ANY REMAINING OPENINGS SHALL BE CAPPED OR PLUGGED.
8. COORDINATE WITH OWNER FOR EQUIPMENT TO BE SALVAGED PER 02 41 00 "DEMOLITION" ALL PIPING AND EQUIPMENT NOT DESIGNATED FOR SALVAGE SHALL BE REMOVED AND DISPOSED OF OFFSITE.

NOTES BY '⟨X⟩' SYMBOL:

⟨1⟩ REMOVE OR ABANDON IN PLACE EXISTING PIPING AS REQUIRED FOR CONSTRUCTION OF PROPOSED PIPING AND TIE-INS.

⟨2⟩ SEE SHT. CD-M1 FOR DEMOLITION OF CHLORINE CONTACT BASIN EQUIPMENT.

⟨3⟩ CITY COORDINATING REMOVAL OF EXISTING LIGHT AND POWER POLES PRIOR TO CONSTRUCTION. SEE ELECTRICAL SHEETS FOR POWER FEED ROUTING.

⟨4⟩ DEMOLISH EXISTING PARSHALL FLUMES, STRUCTURES, PIPING AND APPURTENANCES.

⟨1⟩ ⟨5⟩ DECOMMISSIONED CONCRETE RACETRACK BASIN TO BE COMPLETELY DEMOLISHED AND REMOVED. BOTTOM SLAB OF RACETRACK IS APPROXIMATELY 2'-1" THICK, BASIN WALLS ARE APPROXIMATELY 1'-0" THICK, AND THE DEPTH OF THE BASIN IS APPROXIMATELY 6'. APPROXIMATELY 350 CY OF FILL MATERIAL LOCATED INSIDE OF RACETRACK MAY BE DEPOSITED BY THE CONTRACTOR ON SITE AT A LOCATION SPECIFIED BY THE CITY FOR FUTURE USE BY THE CITY AT NO COST. ALL DIMENSIONS ARE APPROXIMATE, AND SHALL BE FIELD VERIFIED BY CONTRACTOR.

⟨6⟩ REMOVE EXISTING V-NOTCH WEIR PLATE AND ANGLES FROM EFFLUENT BOX.

⟨7⟩ CITY HAS OPTION TO REMOVE/SALVAGE EXISTING DECHLORINATION BUILDING.

This Record Drawing is a combination of the sealed engineering contract drawings for this project, modified by information furnished by the contractor reflecting changes in the Project made during construction. The original sealed drawings are on file at the offices of
FREESE AND NICHOLS, INC.
RECORD DRAWINGS PREPARED ON:
06/24/20

LEGEND:

STRUCTURES AND EQUIPMENT TO BE REMOVED, PIPING TO BE REMOVED OR ABANDONED IN PLACE AS NEEDED FOR CONSTRUCTION.

Freese and Nichols, Inc.
Texas Registered Engineering Firm F-2144

THE SEAL APPEARING ON THIS DOCUMENT WAS AUTHORIZED BY CORY C. GEE 7/20/2016
ALTERATION OF A SEALED DOCUMENT WITHOUT PROPER AUTHORIZATION AND ADDITIONAL SEAL IS A VIOLATION OF LAW AND OFFENDERS UNDER THE TEXAS ENGINEERING PRACTICE ACT.

FREESE NICHOLS
4040 Broadway Street, Suite 600
San Antonio, Texas 78209-6350
Phone (210) 298-8900
Fax (210) 298-8901
Web - www.freese.com

CITY OF CASTROVILLE
WWTP CAPACITY EXPANSION PROJECT
CIVIL
DEMOLITION PLAN 1 OF 2

NO.	ISSUE	BY	DATE
	RECORD DRAWING	CCG	06/24/20
2	ISSUED FOR CONSTRUCTION	CCG	11/16/16
1	ADDENDUM NO. 3	CCG	7/20/16

VERIFY SCALE Bar is one inch on original drawing. If not one inch on this sheet, adjust scale.
0 1"

JOB NO.	CVL14259
DATE	6/10/16
DESIGNED	CCG
DRAWN	DDH
REVISED	-
CHECKED	TWS
FILE NAME	WW-EX-DEM001.dwg

SHEET C-3
SEQ.

ACAD Rel: 21.0s (LMS Tech)
Filename: N:\STANDARD\WW-EX-DEM001.dwg
Last Saved: 10/9/2019 11:22 AM Saved By: 03576

Plot Date: 6/18/2020 4:50 PM Plot By: 90119 Filename: N:\STANDARD\WW-EX-DEM001.dwg

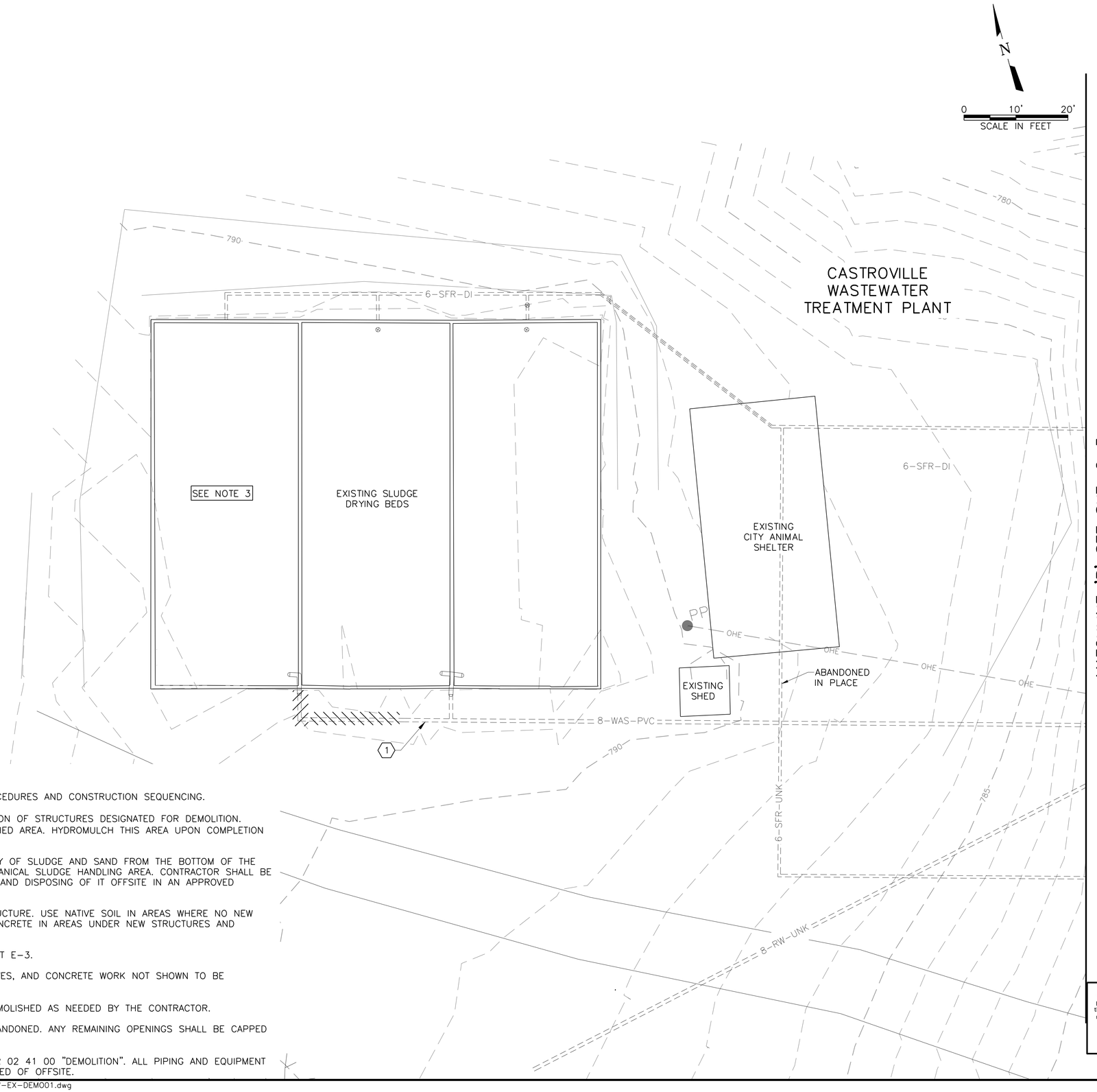

LEGEND:

STRUCTURES AND EQUIPMENT TO BE REMOVED, PIPING TO BE REMOVED OR ABANDONED IN PLACE, AS NEEDED FOR CONSTRUCTION

NOTES BY '⟨X⟩' SYMBOL:

⟨1⟩ REMOVE OR ABANDON IN PLACE EXISTING PIPING AS REQUIRED FOR CONSTRUCTION OF PROPOSED PIPING AND TIE-INS.

NOTES:

1. REFER TO SPECIFICATION SECTION 01 35 00 FOR SPECIAL PROCEDURES AND CONSTRUCTION SEQUENCING.
2. REMOVE AND DISPOSE OF GRAVEL AND/OR CONCRETE FOUNDATION OF STRUCTURES DESIGNATED FOR DEMOLITION. PROVIDE A MINIMUM 6" OF TOPSOIL OVER THE ENTIRE DEMOLISHED AREA. HYDROMULCH THIS AREA UPON COMPLETION OF CONSTRUCTION.
3. PRIOR TO CONSTRUCTION THE CITY SHALL REMOVE THE MAJORITY OF SLUDGE AND SAND FROM THE BOTTOM OF THE EXISTING SLUDGE DRYING BED TO BE CONVERTED TO THE MECHANICAL SLUDGE HANDLING AREA. CONTRACTOR SHALL BE RESPONSIBLE FOR CLEANING OUT REMAINING SAND AND SOLIDS AND DISPOSING OF IT OFFSITE IN AN APPROVED MANNER.
4. FILL ALL AREAS REMAINING AFTER THE DEMOLITION OF ANY STRUCTURE. USE NATIVE SOIL IN AREAS WHERE NO NEW CONSTRUCTION IS LOCATED. USE SELECT BACKFILL OR LEAN CONCRETE IN AREAS UNDER NEW STRUCTURES AND PAVEMENT. GRADE AREA TO PROVIDE DRAINAGE.
5. ELECTRICAL DEMOLITION IS AS SHOWN ON THE ELECTRICAL SHEET E-3.
6. MAINTAIN AND PROTECT ALL STRUCTURES, BUILDINGS, PIPE, VALVES, AND CONCRETE WORK NOT SHOWN TO BE DEMOLISHED.
7. ALL PIPING DESIGNATED AS "ABANDONED IN PLACE" MAY BE DEMOLISHED AS NEEDED BY THE CONTRACTOR.
8. FOR SECTIONS OF EXISTING PIPE THAT ARE DEMOLISHED OR ABANDONED. ANY REMAINING OPENINGS SHALL BE CAPPED OR PLUGGED.
9. COORDINATE WITH OWNER FOR EQUIPMENT TO BE SALVAGED PER 02 41 00 "DEMOLITION". ALL PIPING AND EQUIPMENT NOT DESIGNATED FOR SALVAGE SHALL BE REMOVED AND DISPOSED OF OFFSITE.

This Record Drawing is a combination of the sealed engineering contract drawings for this project, modified by information furnished by the contractor reflecting changes in the Project made during construction. The original sealed drawings are on file at the offices of
FREESE AND NICHOLS, INC.
RECORD DRAWINGS PREPARED ON:
06/24/20

Freese and Nichols, Inc.
Texas Registered Engineering Firm F-2144

THE SEAL THAT ORIGINALLY APPEARED ON THIS DOCUMENT WAS AUTHORIZED BY CORY C. GEE, P.E. TEXAS NO. 118865 ON 7/20/2016. ALTERATION OF A SEALED DOCUMENT WITHOUT PROPER NOTIFICATION OF THE RESPONSIBLE ENGINEER IS A OFFENSE UNDER THE TEXAS ENGINEERING PRACTICE ACT.

FREESE AND NICHOLS
4040 Broadway Street, Suite 600
San Antonio, Texas 78209-6350
Phone - (210) 298-3800
Fax - (210) 298-3801
Web - www.freese.com

CITY OF CASTROVILLE
WWTP CAPACITY EXPANSION PROJECT
CIVIL
DEMOLITION PLAN 2 OF 2

NO.	ISSUE	BY	DATE
2	RECORD DRAWING	CCG	06/24/20
1	ISSUED FOR CONSTRUCTION	CCG	11/16/16

F&N JOB NO. CVL14259
DATE 6/10/16
DESIGNED CCG
DRAWN KV
REVISED
CHECKED TWS
FILE NAME WW-EX-DEMO01.dwg

VERIFY SCALE 0 1
Bar is one inch on original drawing. If not one inch on this sheet, adjust scale.

SHEET C-4
SEQ.

ACAD Rel: 21.0s (LMS Tech)
Filename: N:\STANDARD\WW-EX-DEMO01.dwg
Last Saved: 10/9/2019 11:22 AM Saved By: 03576

Plot Date: 6/18/2020 4:50 PM Plot By: 90119 Filename: N:\STANDARD\WW-EX-DEMO01.dwg

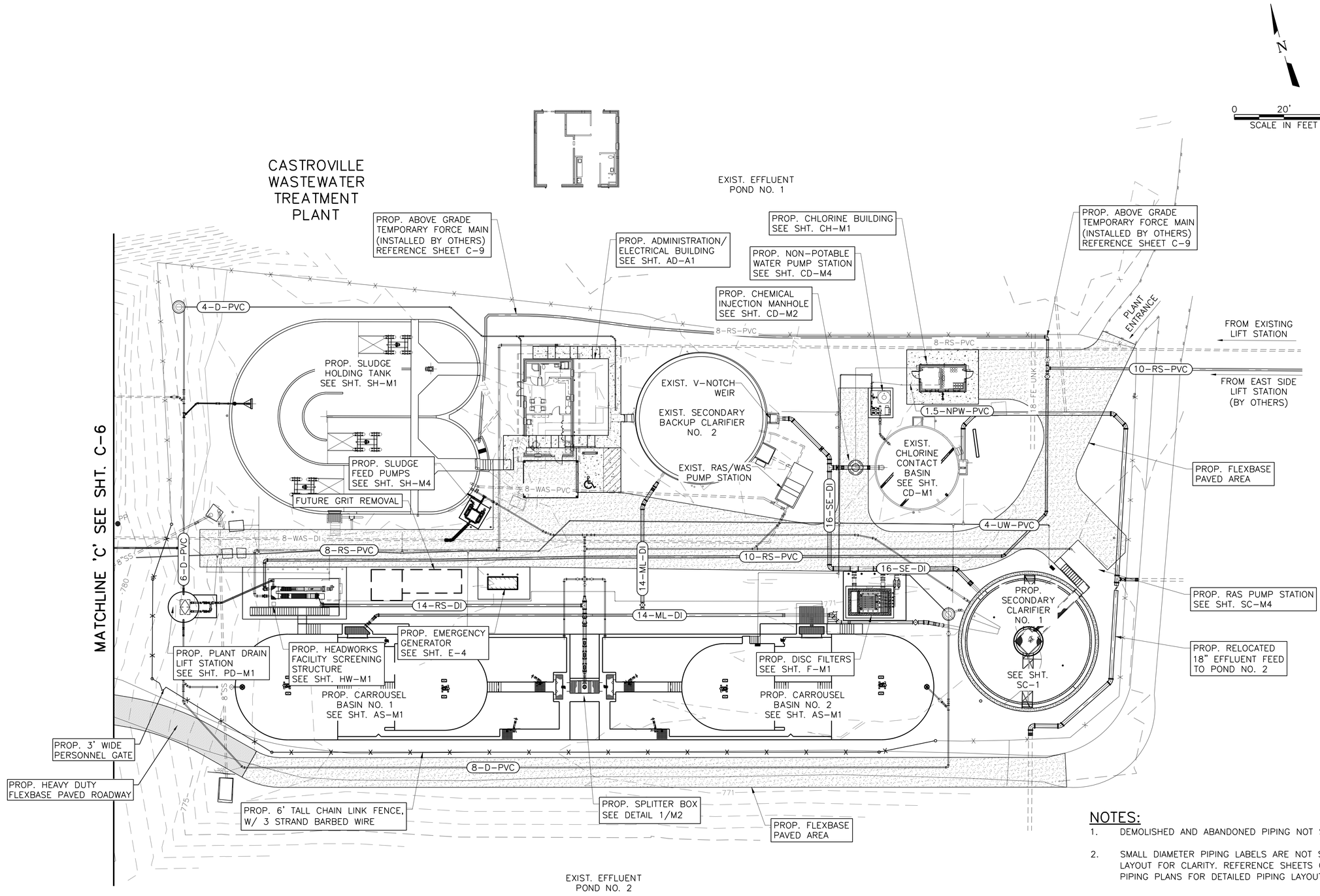

NOTES:

1. DEMOLISHED AND ABANDONED PIPING NOT SHOWN FOR CLARITY.
2. SMALL DIAMETER PIPING LABELS ARE NOT SHOWN ON THE SITE LAYOUT FOR CLARITY. REFERENCE SHEETS C-7 THROUGH C-9 SITE PIPING PLANS FOR DETAILED PIPING LAYOUTS AND LABELS.

LEGEND:

FLEXIBLE BASE

HEAVY DUTY FLEXIBLE BASE

This Record Drawing is a combination of the sealed engineering contract drawings for this project, modified by information furnished by the contractor reflecting changes in the Project made during construction. The original sealed drawings are on file at the offices of FREESE AND NICHOLS, INC. RECORD DRAWINGS PREPARED ON: 06/24/20

Freese and Nichols, Inc.
Texas Registered Engineering Firm F-2144

THE SEAL THAT ORIGINALLY APPEARED ON THIS DOCUMENT WAS AUTHORIZED BY COBY C. GEE, P.E. TEXAS NO. 118655 ON 08/10/2016. ALTERATION OF SEALED DOCUMENT WITHOUT PROPER NOTIFICATION OF THE RESPONSIBLE ENGINEER IS OFFENSE UNDER THE TEXAS ENGINEERING PRACTICE ACT.

FREESE AND NICHOLS
4040 Broadway Street, Suite 600
San Antonio, Texas 78209-6350
Phone - (210) 298-3800
Fax - (210) 298-3801
Web - www.freese.com

CITY OF CASTROVILLE
WWTP CAPACITY EXPANSION PROJECT
CIVIL
PROPOSED SITE LAYOUT 1 OF 2

NO.	ISSUE	BY	DATE
2	RECORD DRAWINGS	CCG	06/24/20
1	ISSUED FOR CONSTRUCTION	CCG	11/16/16

F&N JOB NO. CVL14259
DATE 6/10/16
DESIGNED CCG
DRAWN DDH
REVISED
CHECKED TWS
FILE NAME GN-PROP-OVRL01.dwg

VERIFY SCALE Bar is one inch on original drawing. If not one inch on this sheet, adjust scale.
0 1

SHEET C-5
SEQ.

ACAD Rel: 21.0s (LMS Tech)
Filename: N:\STANDARD\GN-PROP-OVRL01.dwg
Last Saved: 10/9/2019 12:33 PM Saved By: 03576

Plot Date: 6/18/2020 4:52 PM Plot By: 90119 Filename: N:\STANDARD\GN-PROP-OVRL01.dwg

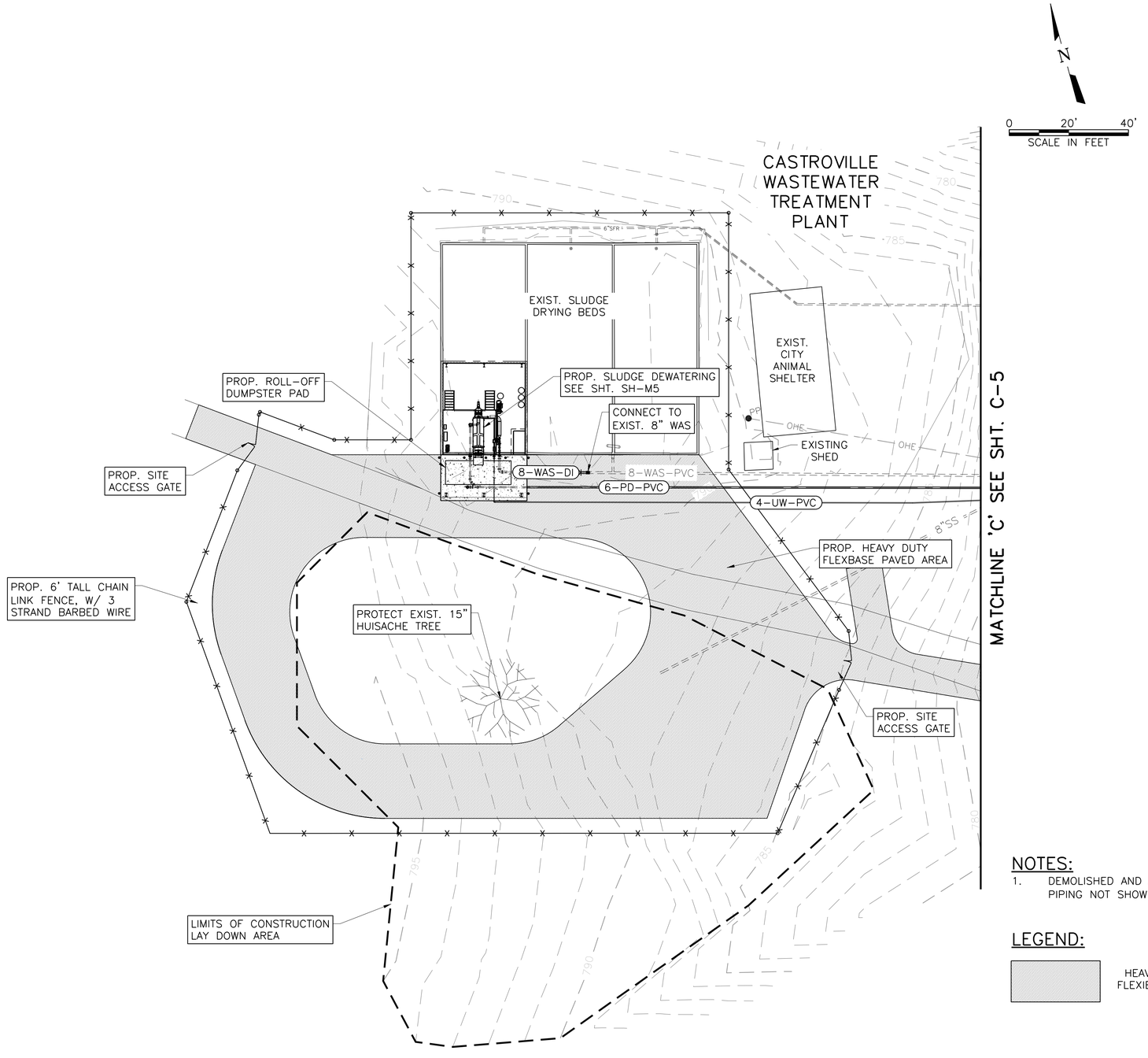

NOTES:

1. DEMOLISHED AND ABANDONED PIPING NOT SHOWN FOR CLARITY.

LEGEND:

HEAVY DUTY FLEXIBLE BASE

This Record Drawing is a combination of the sealed engineering contract drawings for this project, modified by information furnished by the contractor reflecting changes in the Project made during construction. The original sealed drawings are on file at the offices of FREESE AND NICHOLS, INC. RECORD DRAWINGS PREPARED ON: 06/24/20

Freese and Nichols, Inc.
Texas Registered Engineering Firm F-2144

THE SEAL THAT ORIGINALLY APPEARED ON THIS DOCUMENT WAS AUTHORIZED BY CORY C. GEE P.E. TEXAS NO. 118665 ON 08/10/2016 ALTERATION OF A SEALED DOCUMENT WITHOUT PROPER NOTIFICATION OF THE RESPONSIBLE ENGINEER IS AN OFFENSE UNDER THE TEXAS ENGINEERING PRACTICE ACT

FREESE AND NICHOLS
4040 Broadway Street, Suite 600
San Antonio, Texas 78209-6350
Phone - (210) 298-3800
Fax - (210) 298-3801
Web - www.freese.com

CITY OF CASTROVILLE
WWTP CAPACITY EXPANSION PROJECT
CIVIL
PROPOSED SITE LAYOUT 2 OF 2

NO.	ISSUE	BY	DATE
2	RECORD DRAWINGS	CCG	06/24/20
1	ISSUED FOR CONSTRUCTION	CCG	11/16/16

F&N JOB NO. CVL14259
DATE 6/10/16
DESIGNED CCG
DRAWN DDH
REVISED
CHECKED TWS
FILE NAME GN-PROP-OVRL01.dwg

VERIFY SCALE 0 1 Bar is one inch on original drawing. If not one inch on this sheet, adjust scale.

SHEET C-6
SEQ.

ACAD Rel: 21.0s (LMS Tech)
Filename: N:\STANDARD\GN-PROP-OVRL01.dwg
Last Saved: 10/9/2019 12:33 PM Saved By: 03576

Plot Date: 6/18/2020 4:52 PM Plot By: 90119 Filename: N:\STANDARD\GN-PROP-OVRL01.dwg

NOTES:

1. PIPING LOCATIONS SHOWN MAY BE ALTERED IN THE FIELD AS REQUIRED FOR CONSTRUCTION, WITH APPROVAL BY THE OWNER AND ENGINEER. PROVIDE ALL REQUIRED FITTINGS AND APPURTENANCES FOR A COMPLETE WATERTIGHT SYSTEM, INCLUDING CONNECTIONS TO EQUIPMENT AND EXISTING PIPELINES.
2. PROVIDE RESTRAINED JOINTS OR THRUST BLOCKING AT ALL FITTINGS, VALVES, AND PLUGS IN ACCORDANCE WITH THE STANDARDS, DETAILS, AND SPECIFICATIONS.
3. GRAVITY PIPELINES SHALL BE CONSTRUCTED WITH A SLOPE BETWEEN THE TCEQ CH. 217 MINIMUM AND MAXIMUM ALLOWABLE SLOPES.
4. UW PIPING IS SHOWN IN LIMITED DETAIL. CONTRACTOR SHALL PROVIDE ALL REQUIRED FITTINGS AND APPURTENANCES FOR A COMPLETE WATERTIGHT SYSTEM. INCLUDE ISOLATION VALVES AT EACH BRANCH IN THE SYSTEM.
5. CONTRACTOR SHALL MAKE VERTICAL ALIGNMENT ADJUSTMENTS WITH UW, RAS, OR RS PIPELINES AS REQUIRED TO AVOID ANY POSSIBLE CONFLICTS WITH GRAVITY PIPELINES.

NOTES BY SYMBOL "⟨X⟩":

1 CLEANOUT PER DETAIL 311.

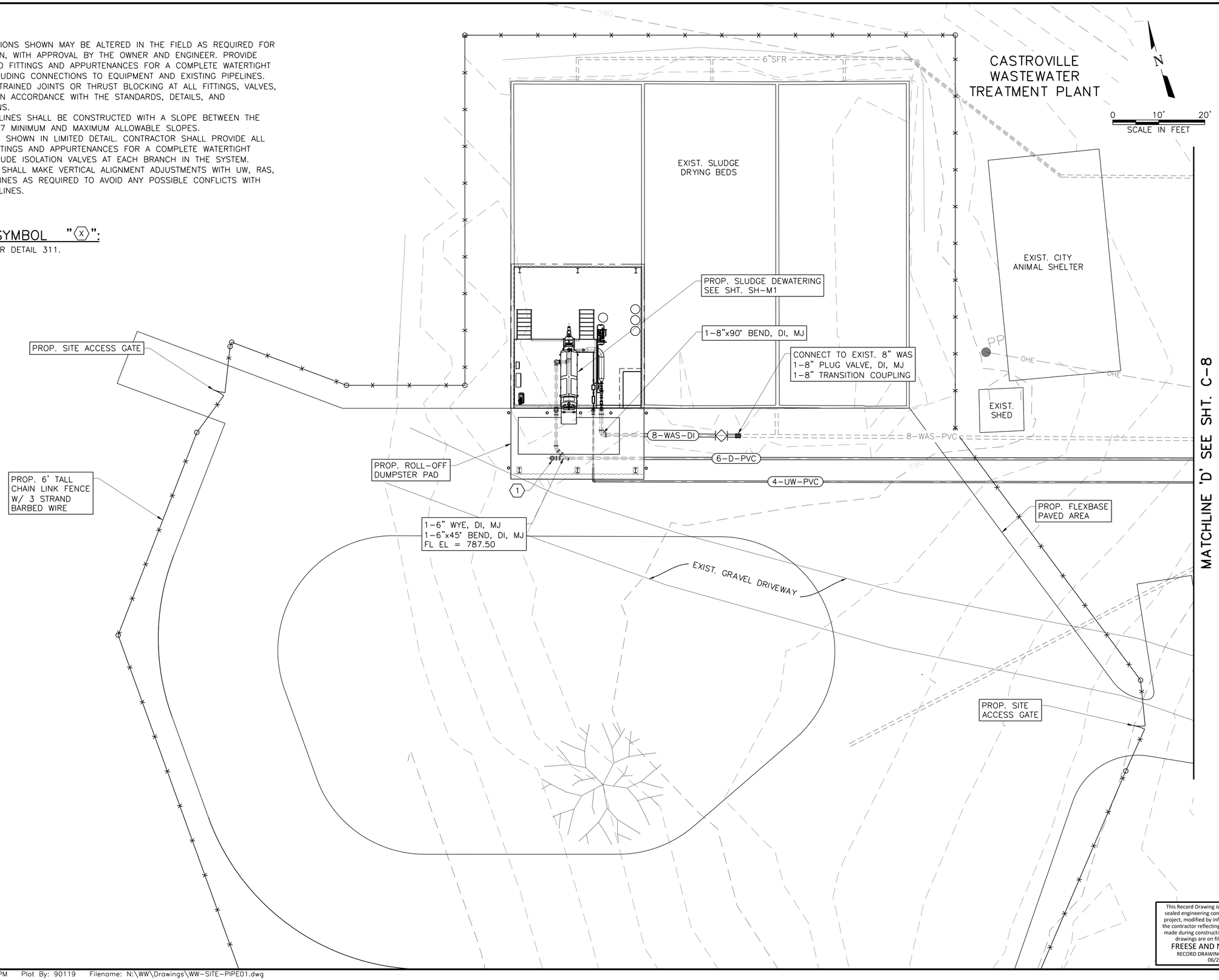

This Record Drawing is a combination of the sealed engineering contract drawings for this project, modified by information furnished by the contractor reflecting changes in the Project made during construction. The original sealed drawings are on file at the offices of FREESE AND NICHOLS, INC.
RECORD DRAWINGS PREPARED ON: 06/24/20

Freese and Nichols, Inc.
Texas Registered Engineering Firm F-2144

THE SEAL THAT APPEARS ON THIS DOCUMENT WAS AUTHORIZED BY CHRISTOPHER C. GRIFFITH, P.E. TEXAS NO. 128227 ON 06/10/16. IT IS NOT TO BE USED ON ANY DOCUMENT WITHOUT PROPER NOTIFICATION OF THE RESPONSIBLE ENGINEER IS AN OFFENSE UNDER THE TEXAS ENGINEERING PRACTICE ACT

THE SEAL THAT ORIGINALLY APPEARED ON THIS DOCUMENT WAS AUTHORIZED BY TIMOTHY W. SIMPSON, P.E. TEXAS NO. 81881 BEFORE ON 06/10/16. IT IS NOT TO BE USED ON ANY DOCUMENT WITHOUT PROPER NOTIFICATION OF A SEALED DOCUMENT WITHOUT PROPER ALTERATION OF A SEALED DOCUMENT WITHOUT PROPER NOTIFICATION IS AN OFFENSE UNDER THE TEXAS ENGINEERING PRACTICE ACT

FREESE NICHOLS

4040 Broadway Street, Suite 600
San Antonio, Texas 78209-6350
Phone - (210) 824-3000
Fax - (210) 826-2901
Web - www.freese.com

CITY OF CASTROVILLE

WWTP CAPACITY EXPANSION PROJECT

CIVIL

SITE PIPING PLAN 1 OF 3

F&N JOB NO.	CVL14259
DATE	6/10/16
DESIGNED	CCG
DRAWN	DDH
CHECKED	TWS
FILE NAME	WW-SITE-PIPE01.dwg

NO.	ISSUE	BY	DATE
2	RECORD DRAWINGS	CCG	06/24/20
1	ISSUED FOR CONSTRUCTION	CCG	11/16/16

VERIFY SCALE Bar is one inch on original drawing. If not one inch on this sheet, adjust scale.
0 1"

SHEET C-7
SEQ.

ACAD Rel: 21.0s (LMS Tech)
Filename: N:\WW\Drawings\WW-SITE-PIPE01.dwg
Last Saved: 6/18/2020 1:27 PM Saved By: 90119

Plot Date: 6/18/2020 4:54 PM Plot By: 90119 Filename: N:\WW\Drawings\WW-SITE-PIPE01.dwg

NOTES BY SYMBOL "(X)":

1. EXISTING 8" RAS LINE CONVERTED TO 8" WAS LINE.
2. TERMINATION POINT OF TEMPORARY LINE INSTALLED BY OTHERS.
3. YARD HYDRANT PER DETAIL 329/ TYPE A
4. UTILITY STATION PER DETAIL 362/ TYPE B
5. UTILITY STATION PER DETAIL 362/ TYPE C
6. CLEANOUT PER DETAIL 311
7. PROVIDE 6" MINIMUM CLEARANCE BETWEEN PIPES. ENCASE INTERSECTING PIPES IN FLOWABLE FILL TO A MINIMUM WIDTH OF 1.25 TIMES THE PIPE DIAMETER. ENCASEMENT SHALL BE 6" BELOW THE BOTTOM OF THE PIPE AND A MINIMUM OF 12" ABOVE THE TOP OF PIPE.

CASTROVILLE WASTEWATER TREATMENT PLANT

MATCHLINE 'D' SEE SHT. C-7

MATCHLINE 'E' SEE SHT. C-9

EXIST. LIGHT POLE

INSTALL:
1-4" DIA. WATERTIGHT MH
RIM EL= 775.50
FL EL=766.9
N:13674754.26
E: 2005475.51

4" PV

4" PVC

1-6" WYE, DI, MJ
1-6"x45° BEND, DI, MJ
1-6" PLUG VALVE
CONNECT TO EXIST. DRAIN LINE
FL EL=766.5

PROP. SLUDGE HOLDING TANK
SEE SHT. SH-M1

PROPOSED SLUDGE FEED PUMPS
SEE SHT. SH-M4

1-4"x45° BEND, DI, MJ

1-8"x90° BEND, DI, MJ

1-4"x45° BEND, DI, MJ

1-4" WYE, DI, MJ
1-4"x45° BEND, DI, MJ
FL EL=768.2

10" FORCE MAIN, HDPE
(TEMPORARY ABOVE GRADE)
(BY OTHERS)

FL EL=768.9
SEE PLUMBING SHEET
FOR CONTINUATION

CONNECT TO EXISTING 8" WAS
1-8"x45° BEND, DI, MJ
1-RESTRAINED FLANGE
COUPLING ADAPTER

CONNECT TO EXISTING 8" FORCE MAIN
1-8" RESTRAINED FLEXIBLE
COUPLING ADAPTER

2-4"x45° BEND, DI, MJ

4-D-PVC

8-RS-PVC

6" RS-PVC
2-8" COUPLING

PROP. ADMINISTRATION ELECTRICAL BUILDING

FL EL=768.9
SEE PLUMBING SHEET
FOR CONTINUATION

EXIST. SECONDARY BACKUP CLARIFIER NO. 2

CONNECT TO EXISTING 10" ML
1-10"x14" REDUCER, DI, MJ
1-14" FLEXIBLE COUPLING

8" RS-TEMP REROUTE
1-8" WYE
2-8" 45° BEND
2-8" PLUG VALVE

8-WAS-PVC

1-14"x11.25° BEND, DI, MJ

1-14"x22.5° BEND, DI, MJ

1-6"x11.25° BEND, DI, MJ

1-6"x22.5° BEND, DI, MJ

4-UW-PVC

6"X6" TEE, DI, MJ

6" PLUG VALVES, MJ

1-6"x6" CROSS, DI, MJ
3-6" PLUG VALVES, MJ

6-RAS-PVC

1-6"x90° BEND, DI, MJ

14-ML-PVC

FL EL=767.97

1/2-AL-PVC

1-14"x14" TEE, DI, MJ
1-14" PLUG VALVE, MJ
1-14"x10" REDUCER, DI, MJ

1-14"x12" TEE, DI, MJ
1-14"x6" REDUCER, DI, MJ

2-14"x45° BEND, DI, MJ

2-45° BEND

PROP. CARROUSEL BASIN NO. 2
SEE SHT. AS-M1

1-10"x90° BEND, DI, MJ

1-8"x90° BEND, DI, MJ

8-WAS-DI

6-D-PVC

8-RS-PVC

10-RS-PVC

1-8"x90° BEND, DI, MJ

1½-UW-PVC

FUTURE GRIT REMOVAL

FL EL=768.53

FL EL=767.53

12-RS-DI

10-ML-PVC

1½-UW-PVC

1-6" WYE, DI, MJ
1-6"x45° BEND, DI, MJ
1-6" FLEXIBLE COUPLING ADAPTER
FL EL=766.10

1-8" PLUG VALVE

6-D-PVC

6" FL EL=766.15

8" FL EL=763.68

1-8" PLUG VALVE

8-D-PVC

1-8" WYE, DI, MJ
1-8"x45° BEND, DI, MJ
FL EL=763.80

1-8"x45° BEND, DI, MJ

PROP. PLANT DRAIN LIFT STATION
SEE SHT. PD-M1

PROP. HEADWORKS FACILITY SCREENING STRUCTURE
SEE SHT. HW-M1

1-8" MUD VALVE

1-8" PLUG VALVE

PROP. CARROUSEL BASIN NO. 1
SEE SHT. AS-M1

1-10"x45° BEND, DI, MJ

1-10" PLUG VALVE
1-10" FLEXIBLE COUPLING ADAPTER

FL EL=763.4

FL EL=762.19

PROP. EMERGENCY GENERATOR
SEE SHT. E-4

PROP. SPLITTER BOX
SEE SHT. AS-M1

8-D-PVC

1-8"x45° BEND, DI, MJ

PROP. ROADWAY IMPROVEMENTS

PROP. 6' TALL CHAIN LINK FENCE W/ 3 STRAND BARBED WIRE

OHE

8"SS

SIGN

NOTES:

1. PIPING LOCATIONS SHOWN MAY BE ALTERED IN THE FIELD AS REQUIRED FOR CONSTRUCTION, WITH APPROVAL BY THE OWNER AND ENGINEER. PROVIDE ALL REQUIRED FITTINGS AND APPURTENANCES FOR A COMPLETE WATERTIGHT SYSTEM, INCLUDING CONNECTIONS TO EQUIPMENT AND EXISTING PIPELINES.
2. PROVIDE RESTRAINED JOINTS OR THRUST BLOCKING AT ALL FITTINGS, VALVES, AND PLUGS IN ACCORDANCE WITH THE STANDARDS, DETAILS, AND SPECIFICATIONS.
3. GRAVITY PIPELINES SHALL BE CONSTRUCTED WITH A SLOPE BETWEEN THE TCEQ CH. 217 MINIMUM AND MAXIMUM ALLOWABLE SLOPES.
4. UW PIPING IS SHOWN IN LIMITED DETAIL. CONTRACTOR SHALL PROVIDE ALL REQUIRED FITTINGS AND APPURTENANCES FOR A COMPLETE WATERTIGHT SYSTEM. INCLUDE ISOLATION VALVES AT EACH BRANCH IN THE SYSTEM.
5. CONTRACTOR SHALL MAKE VERTICAL ALIGNMENT ADJUSTMENTS WITH UW, RAS OR RS PIPELINES AS REQUIRED TO AVOID ANY POSSIBLE CONFLICTS WITH GRAVITY PIPELINES.

This Record Drawing is a combination of the sealed engineering contract drawings for this project, modified by information furnished by the contractor reflecting changes in the Project made during construction. The original sealed drawings are on file at the offices of FREESE AND NICHOLS, INC.
RECORD DRAWINGS PREPARED ON: 06/24/20

0 10' 20'
SCALE IN FEET

N

Freese and Nichols, Inc.
Texas Registered Engineering Firm F-2144

THE SEAL THAT ORIGINALLY APPEARED ON THIS DOCUMENT WAS LICENSED BY CHRISTOPHER C. GRAHAM
TEXAS NO. 118924 ON 06/24/2020
IT IS A VIOLATION OF LAW FOR ANY PERSON TO ALTER THIS DOCUMENT WITHOUT PROPER NOTIFICATION OF THE RESPONSIBLE ENGINEER IS AN OFFENSE UNDER THE TEXAS ENGINEERING PRACTICE ACT.

THE SEAL THAT ORIGINALLY APPEARED ON THIS DOCUMENT WAS LICENSED BY DAVID D. HOLLOWAY
TEXAS NO. 118924 ON 06/24/2020
IT IS A VIOLATION OF LAW FOR ANY PERSON TO ALTER THIS DOCUMENT WITHOUT PROPER NOTIFICATION OF THE RESPONSIBLE ENGINEER IS AN OFFENSE UNDER THE TEXAS ENGINEERING PRACTICE ACT.

FREESE NICHOLS
4040 Broadway Street, Suite 600
San Antonio, Texas 78209-6350
Phone: (210) 824-3600
Fax: (210) 298-3801
Web - www.freese.com

CITY OF CASTROVILLE

WWTP CAPACITY EXPANSION PROJECT

CIVIL

SITE PIPING PLAN 2 OF 3

NO.	ISSUE	BY	DATE
1	RFI - 010	CCG	02/08/17
2	RECORD DRAWINGS	CCG	06/24/20
3	RFI-006	CCG	1/17/17
A	ISSUED FOR CONSTRUCTION	CCG	11/16/16

VERIFY SCALE Bar is one inch on original drawing. If not one inch on this sheet, adjust scale.
0 1"

FAN JOB NO.	CVL14259
DATE	6/10/16
DESIGNED	CCG
DRAWN	DDH
CHECKED	TWS
FILE NAME	WW-SITE-PIPE01.dwg

SHEET C-8

SEQ.

ACAD Rel: 21.0s (LMS Tech)
Filename: N:\WW\Drawings\WW-SITE-PIPE01.dwg
Last Saved: 6/18/2020 1:27 PM Saved By: 90119

Plot Date: 6/23/2020 1:54 PM Plot By: 90119 Filename: N:\WW\Drawings\WW-SITE-PIPE01.dwg

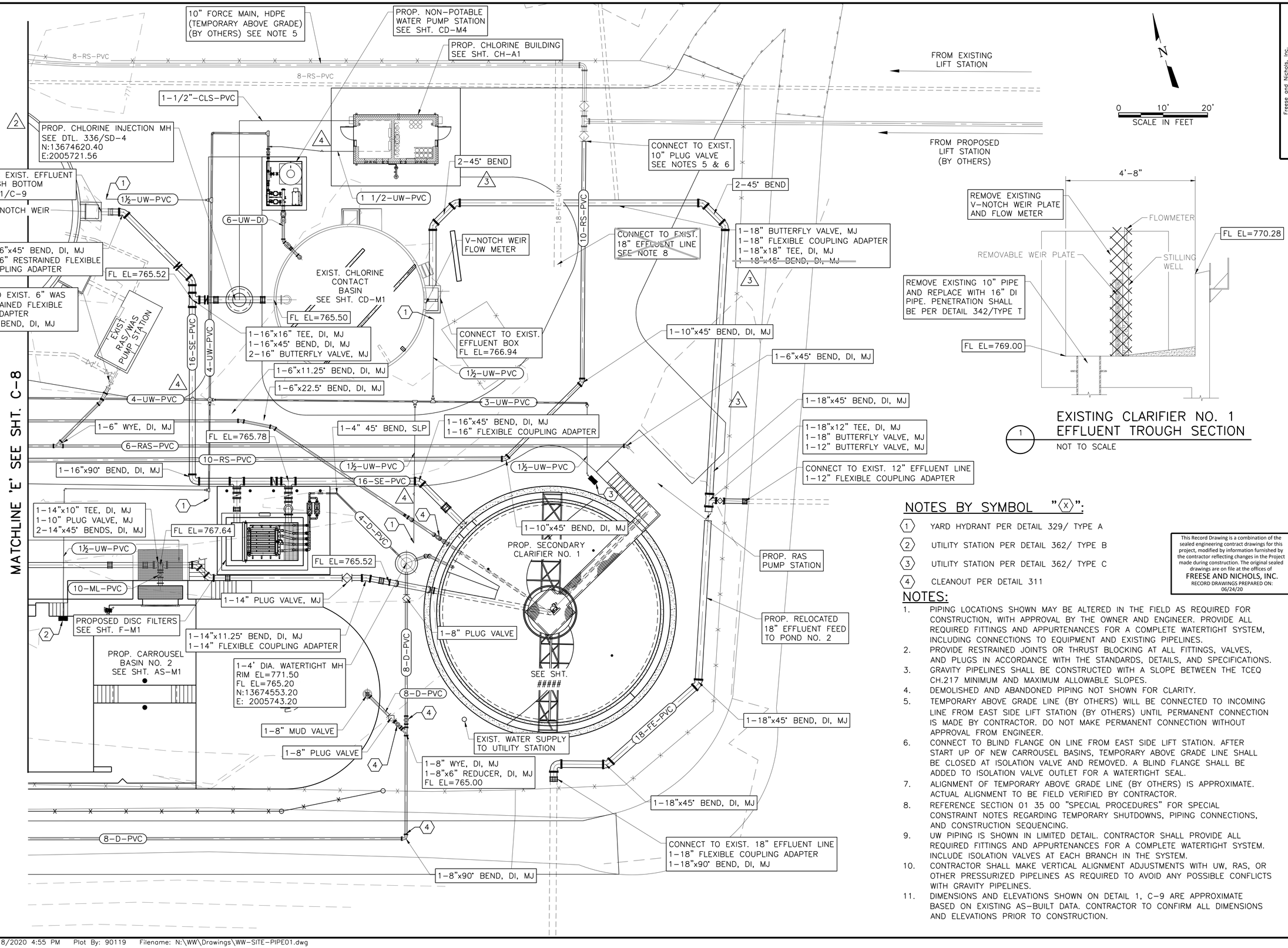

1 EXISTING CLARIFIER NO. 1 EFFLUENT TROUGH SECTION
NOT TO SCALE

NOTES BY SYMBOL "(X)":

(1) YARD HYDRANT PER DETAIL 329/ TYPE A

(2) UTILITY STATION PER DETAIL 362/ TYPE B

(3) UTILITY STATION PER DETAIL 362/ TYPE C

(4) CLEANOUT PER DETAIL 311

This Record Drawing is a combination of the sealed engineering contract drawings for this project, modified by information furnished by the contractor reflecting changes in the Project made during construction. The original sealed drawings are on file at the offices of FREESE AND NICHOLS, INC.
RECORD DRAWINGS PREPARED ON: 06/24/20

NOTES:

1. PIPING LOCATIONS SHOWN MAY BE ALTERED IN THE FIELD AS REQUIRED FOR CONSTRUCTION, WITH APPROVAL BY THE OWNER AND ENGINEER. PROVIDE ALL REQUIRED FITTINGS AND APPURTENANCES FOR A COMPLETE WATERTIGHT SYSTEM, INCLUDING CONNECTIONS TO EQUIPMENT AND EXISTING PIPELINES.
2. PROVIDE RESTRAINED JOINTS OR THRUST BLOCKING AT ALL FITTINGS, VALVES, AND PLUGS IN ACCORDANCE WITH THE STANDARDS, DETAILS, AND SPECIFICATIONS.
3. GRAVITY PIPELINES SHALL BE CONSTRUCTED WITH A SLOPE BETWEEN THE TCEQ CH.217 MINIMUM AND MAXIMUM ALLOWABLE SLOPES.
4. DEMOLISHED AND ABANDONED PIPING NOT SHOWN FOR CLARITY.
5. TEMPORARY ABOVE GRADE LINE (BY OTHERS) WILL BE CONNECTED TO INCOMING LINE FROM EAST SIDE LIFT STATION (BY OTHERS) UNTIL PERMANENT CONNECTION IS MADE BY CONTRACTOR. DO NOT MAKE PERMANENT CONNECTION WITHOUT APPROVAL FROM ENGINEER.
6. CONNECT TO BLIND FLANGE ON LINE FROM EAST SIDE LIFT STATION. AFTER START UP OF NEW CARROUSEL BASINS, TEMPORARY ABOVE GRADE LINE SHALL BE CLOSED AT ISOLATION VALVE AND REMOVED. A BLIND FLANGE SHALL BE ADDED TO ISOLATION VALVE OUTLET FOR A WATERTIGHT SEAL.
7. ALIGNMENT OF TEMPORARY ABOVE GRADE LINE (BY OTHERS) IS APPROXIMATE. ACTUAL ALIGNMENT TO BE FIELD VERIFIED BY CONTRACTOR.
8. REFERENCE SECTION 01 35 00 "SPECIAL PROCEDURES" FOR SPECIAL CONSTRAINT NOTES REGARDING TEMPORARY SHUTDOWNS, PIPING CONNECTIONS, AND CONSTRUCTION SEQUENCING.
9. UW PIPING IS SHOWN IN LIMITED DETAIL. CONTRACTOR SHALL PROVIDE ALL REQUIRED FITTINGS AND APPURTENANCES FOR A COMPLETE WATERTIGHT SYSTEM. INCLUDE ISOLATION VALVES AT EACH BRANCH IN THE SYSTEM.
10. CONTRACTOR SHALL MAKE VERTICAL ALIGNMENT ADJUSTMENTS WITH UW, RAS, OR OTHER PRESSURIZED PIPELINES AS REQUIRED TO AVOID ANY POSSIBLE CONFLICTS WITH GRAVITY PIPELINES.
11. DIMENSIONS AND ELEVATIONS SHOWN ON DETAIL 1, C-9 ARE APPROXIMATE BASED ON EXISTING AS-BUILT DATA. CONTRACTOR TO CONFIRM ALL DIMENSIONS AND ELEVATIONS PRIOR TO CONSTRUCTION.

Freese and Nichols, Inc.
Texas Registered Engineering Firm F-2144

THE SEAL THAT ORIGINALLY APPEARED ON THIS DOCUMENT WAS AUTHORIZED BY CHARLES C. GRAY, P.E. TEXAS NO. 118902 ON 06/10/2016
IT IS NOT TO BE CONSTRUED AS REFLECTING THE ACT OF ANY PERSON NOT PROPERLY EMPLOYED BY THE RESPONSIBLE ENGINEER IS AN OFFENSE UNDER THE TEXAS ENGINEERING PRACTICE ACT

THE SEAL THAT ORIGINALLY APPEARED ON THIS DOCUMENT WAS AUTHORIZED BY DAVID D. HOLLOWAY, P.E. TEXAS NO. 118902 ON 06/10/2016
IT IS NOT TO BE CONSTRUED AS REFLECTING THE ACT OF ANY PERSON NOT PROPERLY EMPLOYED BY THE RESPONSIBLE ENGINEER IS AN OFFENSE UNDER THE TEXAS ENGINEERING PRACTICE ACT

FREESE NICHOLS
4040 Broadway Street, Suite 600
San Antonio, Texas 78209-6350
Phone - (210) 829-3500
Fax - (210) 828-2601
Web - www.freese.com

CITY OF CASTROVILLE
WWTP CAPACITY EXPANSION PROJECT
CIVIL
SITE PIPING PLAN 3 OF 3

NO	ISSUE	BY	DATE
4	RFI - 004	CCG	01/05/17
3	RECORD DRAWINGS	CCG	06/24/20
2	RFI - 007	CCG	1/25/17
1	ISSUED FOR CONSTRUCTION	CCG	11/16/16

FAN JOB NO. CVL14259 | DATE 6/10/16 | DESIGNED CCG | DRAWN DDH | REVISED - | CHECKED TWS | FILE NAME WW-SITE-PIPE01.dwg

VERIFY SCALE Bar is one inch on original drawing. If not one inch on this sheet, adjust scale.
0 1"

SHEET C-9
SEQ.

ACAD Rel: 21.0s (LMS Tech)
Filename: N:\WW\Drawings\WW-SITE-PIPE01.dwg
Last Saved: 6/18/2020 1:27 PM Saved By: 90119

Plot Date: 6/18/2020 4:55 PM Plot By: 90119 Filename: N:\WW\Drawings\WW-SITE-PIPE01.dwg

LEGEND:

- FLEXBASE ROAD — SEE DETAIL 1/#####
- HEAVY DUTY FLEXBASE ROAD — SEE DETAIL 2/#####
- 1591 — EXIST. GRADE CONTOUR W/ ELEVATION NOTED
- 1625 — PROP. FINISH GRADE CONTOUR W/ ELEVATION NOTED
- TOC — PROP. TOP OF CONCRETE ELEVATION
- TOS — PROP. TOP OF SLAB ELEVATION
- FF — PROP. BUILDING FINISH FLOOR ELEVATION
- ℄ — PROP. FLOW LINE ELEVATION
- EL — PROP. FINISH GRADE ELEVATION
- EOFB — EDGE OF FLEXBASE
- EOC — EDGE OF CONCRETE
- PC — POINT OF CURVATURE
- PT — POINT OF TANGENCY

NOTES:

1. YARD PIPING NOT SHOWN FOR CLARITY.
2. CONTRACTOR SHALL GRADE SITE TO EXISTING CONDITION AND MAINTAIN EXISTING DRAINAGE PATTERNS UNLESS INDICATED OTHERWISE. PROVIDE POSITIVE DRAINAGE WITH A MIN. SLOPE OF 0.5% IN UNPAVED AREAS, 1.0% SLOPE IN FLEXBASE PAVED AREAS, AND 2.0% IN PAVED AREAS.
3. GRADE SITE TO DRAIN AWAY FROM ALL SLABS, FOUNDATIONS, AND STRUCTURES WITH NO AREAS FOR STANDING OR POOLING WATER.
4. SUPPORT/PROTECT TREE AS REQUIRED DURING CONSTRUCTION.

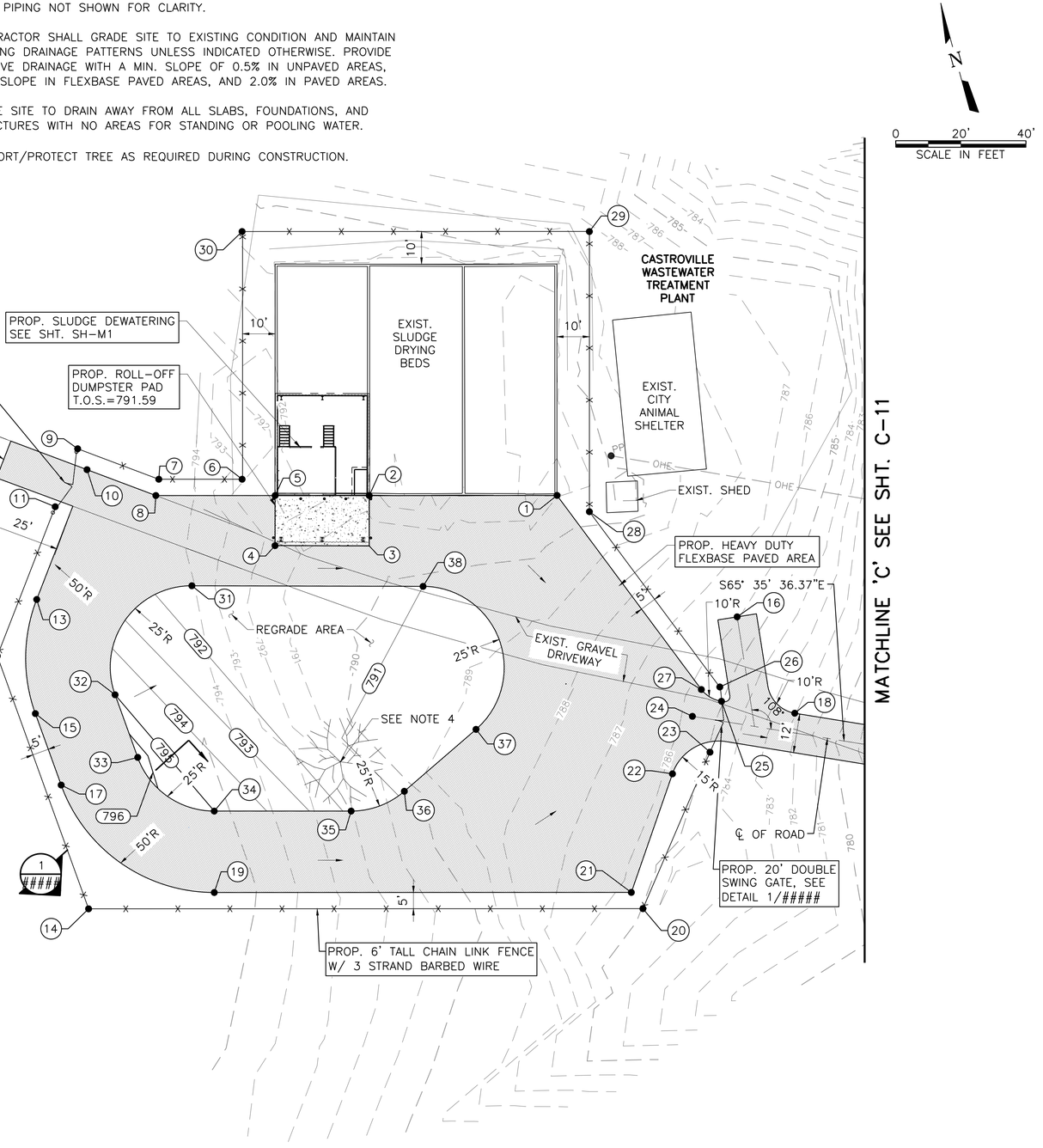

POINT TABLE				
POINT #	NORTHING	EASTING	PROP. ELEVATION	DESCRIPTION
1	13674702.68	2005336.34	791.60	EOFB
2	13674717.71	2005280.64	791.60	EOFB/EOC
3	13674702.84	2005276.58	791.60	EOFB/EOC
4	13674710.45	2005248.69	791.60	EOFB/EOC
5	13674725.30	2005252.74	791.60	EOFB/EOC
6	13674732.78	2005244.25	N/A	FENCE CORNER
7	13674739.48	2005219.54	N/A	FENCE CORNER
8	13674734.89	2005217.36	793.7	EOFB
9	13674755.03	2005197.93	N/A	FENCE CORNER
10	13674748.08	2005199.03	795.00	EOFB
11	13674739.65	2005186.62	N/A	FENCE CORNER
12	13674700.05	2005157.45	N/A	FENCE CORNER
13	13674713.65	2005173.68	795.00	EOFB/PC
14	13674617.76	2005164.21	N/A	FENCE CORNER
15	13674679.91	2005164.12	796.00	EOFB/PT
16	13674652.20	2005380.01	786.00	CL DRIVEWAY
17	13674656.66	2005166.03	797.60	EOFB/PC
18	13674619.01	2005389.34	782.76	EOFB/PT
19	13674612.49	2005202.80	795.00	EOFB/PT
20	13674573.26	2005328.61	N/A	FENCE CORNER
21	13674579.01	2005326.48	786.50	EOFB
22	13674610.85	2005348.20	786.50	EOFB
23	13674614.26	2005361.07	N/A	FENCE CORNER
24	13674626.30	2005358.74	786.50	CL OF ROADWAY
25	13674628.43	2005368.58	785.60	EOFB/PC
26	13674632.81	2005369.23	N/A	FENCE CORNER
27	13674633.53	2005363.55	786.50	EOFB/PT
28	13674695.26	2005344.64	N/A	FENCE CORNER
29	13674778.31	2005367.14	N/A	FENCE CORNER
30	13674806.22	2005264.15	N/A	FENCE CORNER
31	13674705.24	2005220.79	791.30	EOFB/PC
32	13674679.09	2005189.27	795.00	EOFB/PT
33	13674658.71	2005190.95	796.60	EOFB/PC
34	13674636.63	2005209.33	795.00	EOFB/PT
35	13674625.63	2005249.93	792.00	EOFB/PC
36	13674627.23	2005267.29	790.90	EOFB/PT
37	13674639.83	2005293.52	790.00	EOFB/PC
38	13674686.48	2005289.31	791.00	EOFB/PT

This Record Drawing is a combination of the sealed engineering contract drawings for this project, modified by information furnished by the contractor reflecting changes in the Project made during construction. The original sealed drawings are on file at the offices of FREESE AND NICHOLS, INC.
RECORD DRAWINGS PREPARED ON: 06/24/20

Freese and Nichols, Inc.
Texas Registered Engineering Firm F-2144
FREESE NICHOLS
4040 Broadway Street, Suite 600
San Antonio, Texas 78209-6350
Phone: (210) 826-3500
Fax: (210) 286-8901
Web - www.freese.com

THE SEAL THAT ORIGINALLY APPEARED ON THIS DOCUMENT WAS AUTHORIZED BY STEPHANIE D. COX, P.E. ON 6/24/20. IT IS NOT TO BE USED AS A SEALED DOCUMENT WITHOUT PROPER ALTERATION OF THE SEALED DOCUMENT'S CONTENTS AS AN OFFENSE UNDER THE TEXAS ENGINEERING PRACTICE ACT

CITY OF CASTROVILLE
WWTP CAPACITY EXPANSION PROJECT
CIVIL
SITE GRADING AND STAKING PLAN 1 OF 2

F&N JOB NO. CVL14259
DATE 6/10/16
DESIGNED CCG
DRAWN DDH
CHECKED TWS
FILE NAME CV-SITE-PIPE01.dwg

NO.	ISSUE	BY	DATE
	RECORD DRAWINGS	SDC	06/24/20
1	ISSUED FOR CONSTRUCTION	CCG	11/16/16

VERIFY SCALE Bar is one inch on original drawing. If not one inch on this sheet, adjust scale.
0" 1"

SHEET C-10
SEQ.

ACAD Rel: 21.0s (LMS Tech)
Filename: N:\WW\Drawings\CV-SITE-PIPE01.dwg
Last Saved: 10/9/2019 12:00 PM Saved By: 03576

Plot Date: 6/18/2020 4:57 PM Plot By: 90119 Filename: N:\WW\Drawings\CV-SITE-PIPE01.dwg

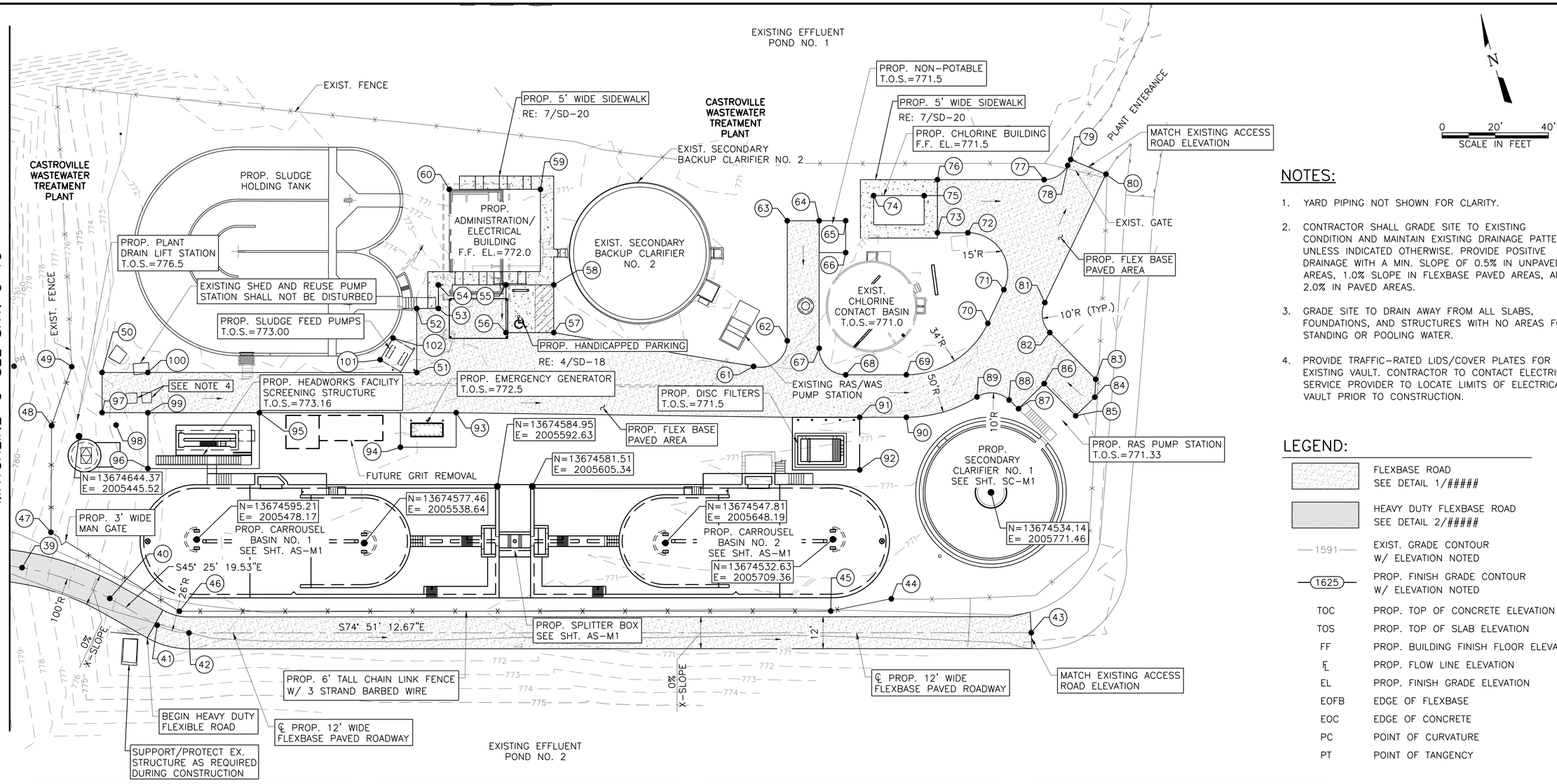

NOTES:

1. YARD PIPING NOT SHOWN FOR CLARITY.
2. CONTRACTOR SHALL GRADE SITE TO EXISTING CONDITION AND MAINTAIN EXISTING DRAINAGE PATTERNS UNLESS INDICATED OTHERWISE. PROVIDE POSITIVE DRAINAGE WITH A MIN. SLOPE OF 0.5% IN UNPAVED AREAS, 1.0% SLOPE IN FLEXBASE PAVED AREAS, AND 2.0% IN PAVED AREAS.
3. GRADE SITE TO DRAIN AWAY FROM ALL SLABS, FOUNDATIONS, AND STRUCTURES WITH NO AREAS FOR STANDING OR POOLING WATER.
4. PROVIDE TRAFFIC-RATED LIDS/COVER PLATES FOR THE EXISTING VAULT. CONTRACTOR TO CONTACT ELECTRICAL SERVICE PROVIDER TO LOCATE LIMITS OF ELECTRICAL VAULT PRIOR TO CONSTRUCTION.

LEGEND:

	FLEXBASE ROAD SEE DETAIL 1/#####
	HEAVY DUTY FLEXBASE ROAD SEE DETAIL 2/#####
1591	EXIST. GRADE CONTOUR W/ ELEVATION NOTED
1625	PROP. FINISH GRADE CONTOUR W/ ELEVATION NOTED
TOC	PROP. TOP OF CONCRETE ELEVATION
TOS	PROP. TOP OF SLAB ELEVATION
FF	PROP. BUILDING FINISH FLOOR ELEVATION
℄	PROP. FLOW LINE ELEVATION
EL	PROP. FINISH GRADE ELEVATION
EOFB	EDGE OF FLEXBASE
EOC	EDGE OF CONCRETE
PC	POINT OF CURVATURE
PT	POINT OF TANGENCY

POINT TABLE

POINT #	NORTHING	EASTING	PROP. ELEVATION	DESCRIPTION
39	13674602.20	2005411.87	779.50	CL OF ROAD/PC
40	13674582.36	2005440.74	775.30	CL OF ROAD/PT
41	13674567.98	2005455.33	772.90	CL OF ROAD/PC
42	13674562.04	2005466.12	772.80	CL OF ROAD/PT
43	13674479.17	2005772.26	770.00±	CL OF ROAD
44	13674505.25	2005724.74	N/A	FENCE CORNER
45	13674506.78	2005701.52	N/A	FENCE CORNER
46	13674570.87	2005464.75	N/A	FENCE CORNER
47	13674612.21	2005425.87	N/A	FENCE CORNER
48	13674650.90	2005436.60	N/A	FENCE CORNER
49	13674670.36	2005449.74	N/A	FENCE CORNER
50	13674665.30	2005460.21	775.50	EOFB
51	13674634.28	2005574.57	772.00	EOFB
52	13674657.54	2005580.86	771.82	EOFB
53	13674655.46	2005588.74	771.50	EOFB/EOC
54	13674664.02	2005591.06	771.65	EOFB/EOC

POINT TABLE

POINT #	NORTHING	EASTING	PROP. ELEVATION	DESCRIPTION
55	13674657.37	2005615.62	771.65	EOFB/EOC
56	13674639.99	2005610.91	771.35	EOFB/EOC
57	13674635.29	2005628.29	771.35	EOFB/EOC
58	13674652.66	2005633.00	771.65	EOC
59	13674688.72	2005637.57	SEE PLANS	BLDG. CORNER
60	13674697.69	2005604.43	SEE PLANS	BLDG. CORNER
61	13674603.33	2005697.60	770.72	EOFB/PC
62	13674609.32	2005712.35	770.80	EOFB/PT
63	13674652.98	2005724.17	771.00	EOFB
64	13674649.84	2005735.75	771.00	EOFB
65	13674647.23	2005745.40	SEE PLANS	EOC
66	13674635.65	2005742.27	SEE PLANS	EOC
67	13674603.47	2005723.20	770.80	EOFB/PC
68	13674591.20	2005730.24	770.60	EOFB/PT
69	13674585.24	2005752.28	770.50	EOFB/PC
70	13674595.92	2005786.96	770.50	EOFB/PT

POINT TABLE

POINT #	NORTHING	EASTING	PROP. ELEVATION	DESCRIPTION
71	13674606.57	2005796.11	770.50	EOFB/PC
72	13674630.82	2005788.64	771.10	EOFB/PT
73	13674633.82	2005777.57	771.20	EOFB
74	13674653.60	2005758.06	SEE PLANS	EOC
75	13674648.64	2005776.40	SEE PLANS	EOC
76	13674653.12	2005782.79	771.20	EOFB
77	13674642.62	2005821.60	770.90	EOFB/PC
78	13674645.51	2005831.58	770.40	EOFB/PT
79	13674647.31	2005833.23	770.40±	EOFB
80	13674638.50	2005844.58	770.40±	EOFB
81	13674597.86	2005809.72	770.00	EOFB/PC
82	13674586.46	2005808.58	770.00	EOFB/PT
83	13674564.95	2005820.65	770.60	EOFB
84	13674558.56	2005818.54	770.70	EOFB
85	13674553.65	2005809.79	770.90	EOFB
86	13674568.47	2005801.48	770.90	EOFB

POINT TABLE

POINT #	NORTHING	EASTING	PROP. ELEVATION	DESCRIPTION
87	13674561.86	2005789.70	770.90	EOFB
88	13674565.96	2005787.15	770.90	EOFB/PC
89	13674570.23	2005775.75	771.00	EOFB/PT/PC
90	13674569.79	2005748.09	771.20	EOFB/PT
91	13674574.40	2005731.12	771.40	EOFB
92	13674555.25	2005725.95	SEE PLANS	EOC
93	13674615.79	2005584.93	772.10	EOFB
94	13674608.73	2005561.26	SEE PLANS	EOC
95	13674635.15	2005513.41	773.16	EOFB
96	13674625.86	2005467.38	SEE PLANS	EOC
97	13674650.68	2005456.26	775.50	EOFB
98	13674644.79	2005460.12	SEE PLANS	EOC
99	13674646.13	2005472.87	773.20	EOFB
100	13674660.79	2005476.84	773.20	EOFB
101	13674642.53	2005562.53	SEE PLANS	EOC
102	13674649.16	2005569.33	SEE PLANS	EOC

This Record Drawing is a combination of the sealed engineering contract drawings for this project, modified by information furnished by the contractor reflecting changes in the Project made during construction. The original sealed drawings are on file at the offices of FREESE AND NICHOLS, INC.
RECORD DRAWINGS PREPARED ON: 06/24/20

Freese and Nichols, Inc.
Texas Registered Engineering Firm F-2144

THE SEAL WAS ORIGINALLY APPLIED ON THE DOCUMENT WAS AUTHORIZED BY STEPHANIE D. DOSS
ALTERATION OF A SEALED DOCUMENT WITHOUT PROPER AUTHORIZATION AND ADDITIONAL SEAL IS A VIOLATION OF THE TEXAS ENGINEERING PRACTICE ACT

FREESE NICHOLS
4040 Broadway Street, Suite 600
San Antonio, Texas 78209-6350
Phone: (210) 829-3800
Fax: (210) 828-9401
Web - www.freese.com

CITY OF CASTROVILLE
WWTP CAPACITY EXPANSION PROJECT
CIVIL
SITE GRADING AND STAKING PLAN 2 OF 2

F&N JOB NO.	CVL14259
DATE	6/10/16
DESIGNED	CCG
DRAWN	DDH
CHECKED	TWS

NO.	ISSUE	BY	DATE
1	RECORD DRAWINGS	SDC	06/24/20
0	ISSUED FOR CONSTRUCTION	CCG	11/16/16

FILE NAME CV-SITE-PIPE01.dwg

VERIFY SCALE Bar is one inch on original drawing. If not one inch on this sheet, adjust scale.
0 1"

SHEET C-11
SEQ.

ACAD Rel: 21.0s (LMS Tech)
Filename: N:\WW\Drawings\CV-SITE-PIPE01.dwg
Last Saved: 10/9/2019 12:00 PM Saved By: 03576
Plot Date: 6/18/2020 4:57 PM Plot By: 90119 Filename: N:\WW\Drawings\CV-SITE-PIPE01.dwg



1 FRONT VIEW FACING NORTH
N.T.S.



2 SIDE VIEW FACING NORTHWEST
N.T.S.



3 SIDE VIEW FACING SOUTHEAST
N.T.S.

NOTES

1. PLANT EFFLUENT RIVER OUTFALL IS LOCATED AT THE FOLLOWING COORDINATES, AND CAN BE ACCESSED THRU THE PARK.
   N: 13673689.95
   E: 2005579.85
2. EXISTING PRECAST CONCRETE HEADWALL STRUCTURE FOR 12" EFFLUENT PIPE INSTALLED BY PREVIOUS CONTRACTOR. REFERENCE DRAFT DESIGN DRAWINGS INCLUDED IN THE APPENDIX FOR APPROXIMATE DETAILS AND LOCATION OF HEADWALL STRUCTURE. EXISTING 12" EFFLUENT PIPE CONNECTION IS NO LONGER FLUSH WITH HEADWALL OUTLET.
3. ALL EXISTING DIMENSIONS SHOWN FOR THE HEADWALL ARE APPROXIMATE BASED ON THE BEST AVAILABLE INFORMATION. CONTRACTOR TO FIELD VERIFY ALL DIMENSIONS PRIOR TO COMMENCING CONSTRUCTION.
4. CONTRACTOR MAY PROPOSE ALTERNATIVE SUGGESTION FOR ANCHORING THE CONCRETE HEADWALL FOR APPROVAL BY ENGINEER.

NOTES BY '⟨X⟩' SYMBOL:

1. RECONNECT 12" PVC EFFLUENT PIPE TO HEADWALL STRUCTURE OUTLET USING ADHESIVE AND GROUT FILL IF REQUIRED. CONTRACTOR TO PROVIDE ALL REQUIRED COUPLINGS AND ADAPTERS TO MAKE PROPOSED CONNECTION. CONTRACTOR MAY PROPOSE ALTERNATIVE CONNECTION FOR APPROVAL BY ENGINEER.
2. INSTALL BOLLARDS AS SHOWN IN ATTACHED SUPPORT BOLLARD DETAIL TO PREVENT HEADWALL STRUCUTURE FROM MOVING DOWNSTREAM. THE BOLLARDS SHOULD SIT FLUSH TO CONCRETE STRUCTURE.
3. BACKFILL HORIZONTALLY BEHIND HEADWALL UNITL BACKFILL IS FLUSH WITH NATURAL GROUND FOR THE ENTIRE WIDTH OF THE HEADWALL STRUCTURE USING FLOWABLE FILL TO 8" BELOW TOP OF HEADWALL STRUCTURE. COVER FLOWABLE FILL WITH 6" OF TOP SOIL AND SEED IN ACCORDANCE WITH SECTION 31 25 13.13 "SEEDING FOR EROSION CONTROL"

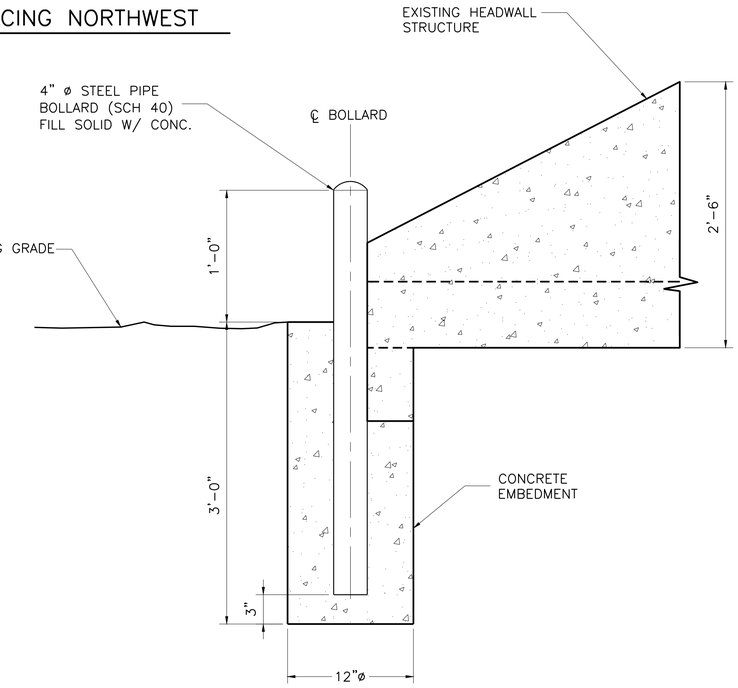

4 STEEL BOLLARDS
N.T.S.

This Record Drawing is a combination of the sealed engineering contract drawings for this project, modified by information furnished by the contractor reflecting changes in the Project made during construction. The original sealed drawings are on file at the offices of FREESE AND NICHOLS, INC.
RECORD DRAWINGS PREPARED ON: 06/24/20

Freese and Nichols, Inc.
Texas Registered Engineering Firm F-2144

FREESE NICHOLS
4040 Broadway, Street, Suite 600
San Antonio, Texas 78209-6350
Phone (210) 829-3800
Fax (210) 829-3901
Web – www.freese.com

THE SEAL (NOT ORIGINALLY APPEARED ON THIS DOCUMENT WAS AUTHORIZED BY CORY C. GEE P.E.
ON 6/24/20 IT IS NOT TO BE USED FOR ANY PURPOSES. ALTERATION OF A SEALED DOCUMENT WITHOUT PROPER AUTHORIZATION AND SEAL OF THE LICENSED ENGINEER IS A VIOLATION OF THE TEXAS ENGINEERING PRACTICE ACT.

CITY OF CASTROVILLE
WWTP CAPACITY EXPANSION PROJECT
CIVIL
EFFLUENT OUTFALL MODIFICATIONS

NO.	ISSUE	BY	DATE
1	RECORD DRAWINGS	CCG	06/24/20
0	ISSUED FOR CONSTRUCTION	CCG	11/16/19

VERIFY SCALE Bar is one inch on original drawing. If not one inch on this sheet, adjust scale.
0 1"

F&N JOB NO.	CVL14259
DATE	6/10/16
DESIGNED	CCG
DRAWN	JD
CHECKED	TWS
FILE NAME	WW-CVL-OUTF01.dwg

SHEET C-12
SEQ.

ACAD Rel: 21.0s (LMS Tech)
Filename: N:\WW\Drawings\WW-CVL-OUTF01.dwg
Last Saved: 10/9/2019 12:02 PM Saved By: 03576

Plot Date: 6/18/2020 4:57 PM Plot By: 90119 Filename: N:\WW\Drawings\WW-CVL-OUTF01.dwg

NOTES BY SYMBOL "⬡"

(1) CHANNEL WIDTH TO BE COORDINATED WITH EQUIPMENT MANUFACTURER.

(2) ADJUST FABRICATED GATE WIDTH TO MATCH CHANNEL WIDTH REQUIREMENTS PER AUTOMATIC SCREEN MANUFACTURER'S RECOMMENDATIONS.

(3) ROUTE (1-UW-PVC) TO THE AUTOMATIC FINE SCREEN AS REQUIRED BY MANUFACTURER.

(4) ROUTE (1 ½-UW-PVC) TO UTILITY STATION MOUNTED ON COLUMN

GENERAL NOTES

1. REFER TO SPECIFICATION SECTION 01 35 00 FOR SPECIAL PROCEDURES AND CONSTRUCTION SEQUENCING.
2. ALL EQUIPMENT SHOWN ON THIS SHEET IS DESIGNED AROUND HUBER ROTOMAT RO9 MICRO STRAINER. IF ANOTHER APPROVED MANUFACTURER IS SELECTED, THE CONTRACTOR SHALL MODIFY THE DESIGN/ LAYOUT PER SELECTED MANUFACTURER'S RECOMMENDATIONS AT NO ADDITIONAL COST TO THE OWNER.
3. ALL GATES SHALL BE 304 SS WITH NON-RISING STEMS AS SHOWN.
4. ALL INTERIOR CONCRETE SURFACES OF THE HEADWORKS STRUCTURE SHALL BE COATED PER SPECIFICATION SECTION 09 96 00.
5. ALL PIPES ABOVE GRADE THAT ARE 10" AND SMALLER SHALL BE HEAT TRACED AND INSULATED. REFERENCE SPECIFICATIONS AND ELECTRICAL DRAWINGS FOR ADDITIONAL INFORMATION.
6. ALL ABOVE GRADE PIPING TO BE DUCTILE IRON, UNLESS OTHERWISE NOTED.

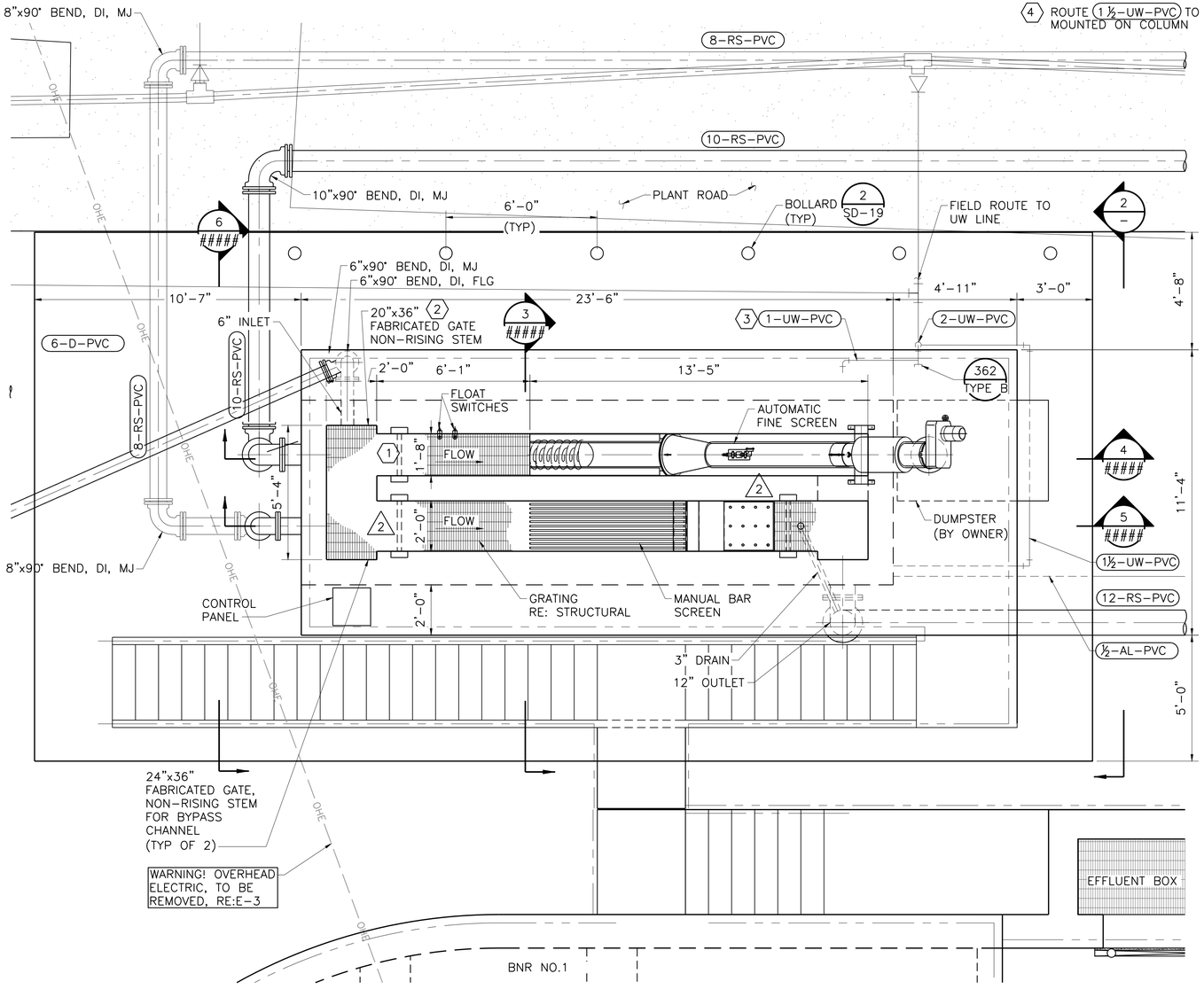

NORTH (1) HW-M1 **TOP PLAN**
3/8"=1'-0"

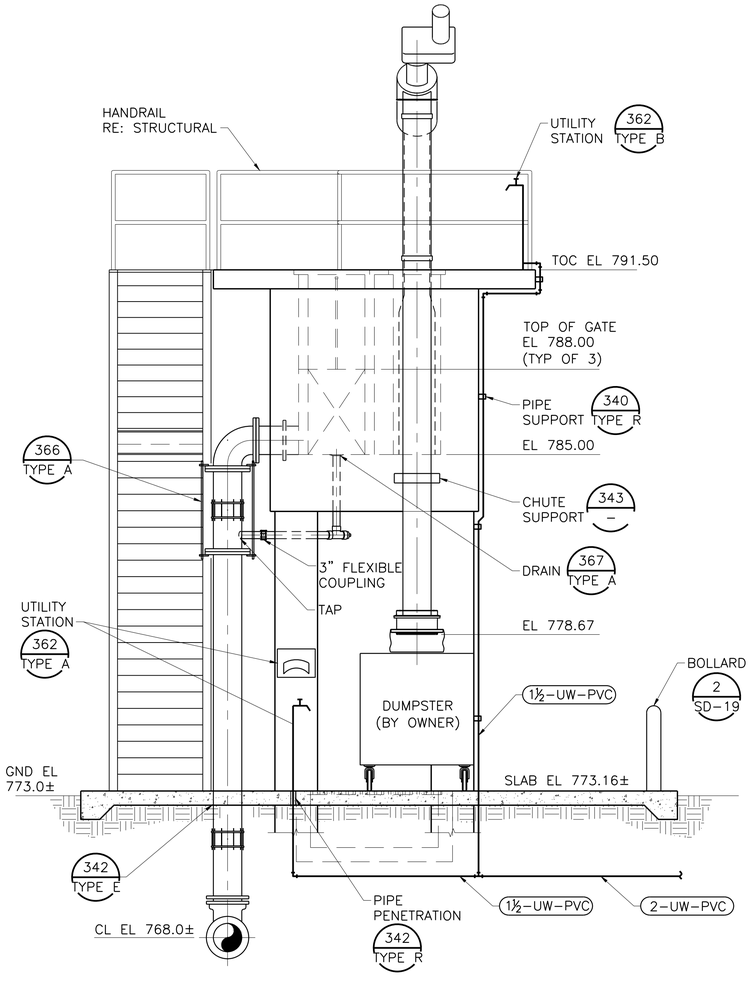

(2) HW-M1 **ELEVATION**
3/8"=1'-0"

This Record Drawing is a combination of the sealed engineering contract drawings for this project, modified by information furnished by the contractor reflecting changes in the Project made during construction. The original sealed drawings are on file at the offices of FREESE AND NICHOLS, INC.
RECORD DRAWINGS PREPARED ON: 06/24/20

0 1' 2' 4'
3/8"=1'-0

Freese and Nichols, Inc.
Texas Registered Engineering Firm F-2144

FREESE NICHOLS
4040 Broadway Street, Suite 600
San Antonio, Texas 78209-6350
Phone: (210) 829-3800
Fax: – (210) 286-8901
Web: – www.freese.com

THE SEAL THAT ORIGINALLY APPEARED ON THIS DOCUMENT WAS AUTHORIZED BY [illegible] P.E. TEXAS NO. 78824 ON 06/24/2020. IT IS NOT TO BE USED AFTER THAT DATE. IMPROPER DISSEMINATION OF THIS DOCUMENT OR NOTIFICATION OF THE RESPONSIBLE ENGINEER IS AN OFFENSE UNDER THE TEXAS ENGINEERING PRACTICE ACT.

CITY OF CASTROVILLE
WWTP CAPACITY EXPANSION PROJECT
MECHANICAL
HEADWORKS FACILITY
TOP PLAN AND ELEVATION

F&N JOB NO.	CVL14259
DATE	6/10/16
DESIGNED	GB
DRAWN	MAJ
REVISED	-
CHECKED	TWS
FILE NAME	WW-HDW-PL-PIPE01.dwg

NO.	ISSUE	BY	DATE
	RECORD DRAWINGS	GB	06/24/20
1	ISSUED FOR CONSTRUCTION	GB	11/16/16

VERIFY SCALE Bar is one inch on original drawing. If not one inch on this sheet, adjust scale.
0 1"

SHEET HW-M1
SEQ.

ACAD Rel: 21.0s (LMS Tech)
Filename: N:\WW\Drawings\WW-HDW-PL-PIPE01.dwg
Last Saved: 6/18/2020 1:23 PM Saved By: 90119

Plot Date: 6/18/2020 4:59 PM Plot By: 90119 Filename: N:\WW\Drawings\WW-HDW-PL-PIPE01.dwg

GENERAL NOTES

1. REFER TO SPECIFICATION SECTION 01 35 00 FOR SPECIAL PROCEDURES AND CONSTRUCTION SEQUENCING.
2. ALL EQUIPMENT SHOWN ON THIS SHEET IS DESIGNED AROUND SPECIFIC MANUFACTURERS. IF ANOTHER APPROVED MANUFACTURER IS SELECTED, THE CONTRACTOR SHALL MODIFY THE DESIGN/ LAYOUT PER SELECTED MANUFACTURER'S RECOMMENDATION AT NO COST TO THE OWNER.
3. ALL GATES SHALL BE 304 SS WITH NON-RISING STEMS AS SHOWN.
4. ALL COMPONENTS OF THE MANUAL BAR SCREEN SHALL BE 304 SS.
5. ALL PIPES ABOVE GRADE THAT ARE 10" AND SMALLER SHALL BE HEAT TRACED AND INSULATED. REFERENCE SPECIFICATIONS AND ELECTRICAL DRAWINGS FOR ADDITIONAL INFORMATION.
6. COAT EXPOSED PIPING PER SECTION 09 96 00 "HIGH-PERFORMANCE COATINGS"
7. ALL ABOVE GRADE PIPING TO BE DUCTILE IRON UNLESS OTHERWISE NOTED.

NOTES BY SYMBOL "⬡"

1. ADJUST FABRICATED GATE WIDTH TO MATCH CHANNEL WIDTH REQUIREMENTS PER AUTOMATIC SCREEN MANUFACTURER'S RECOMMENDATIONS.
2. ROUTE 1/2" ALUM INJECTION PIPING TO INJECTION POINT SHOWN ON SHEET AS-M2. PROVIDE SUPPORTS AS NECESSARY PER 320 TYPE R
3. CONTRACTOR TO PROVIDE MINIMUM 1" POLYETHYLENE TUBING, WITH ADAPTERS TO CONNECT TO 1" AND 2" NTP THREAD.
4. PROVIDE WYE WITH 3/4" STANDARD HOSE CONNECTION FOR FLUSHING OF ALUM LINE.

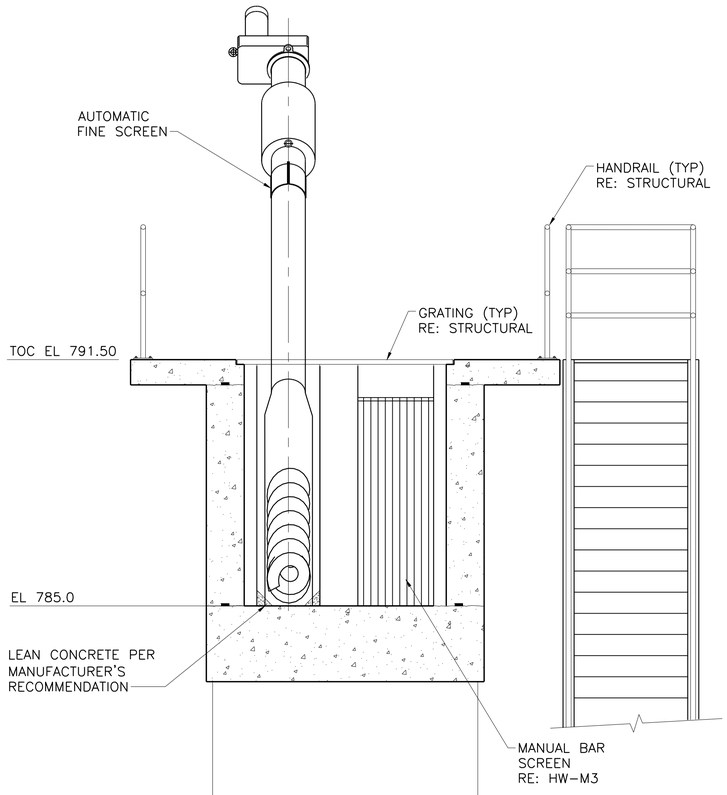

3 HW-M1 SECTION 1/2"=1'-0"

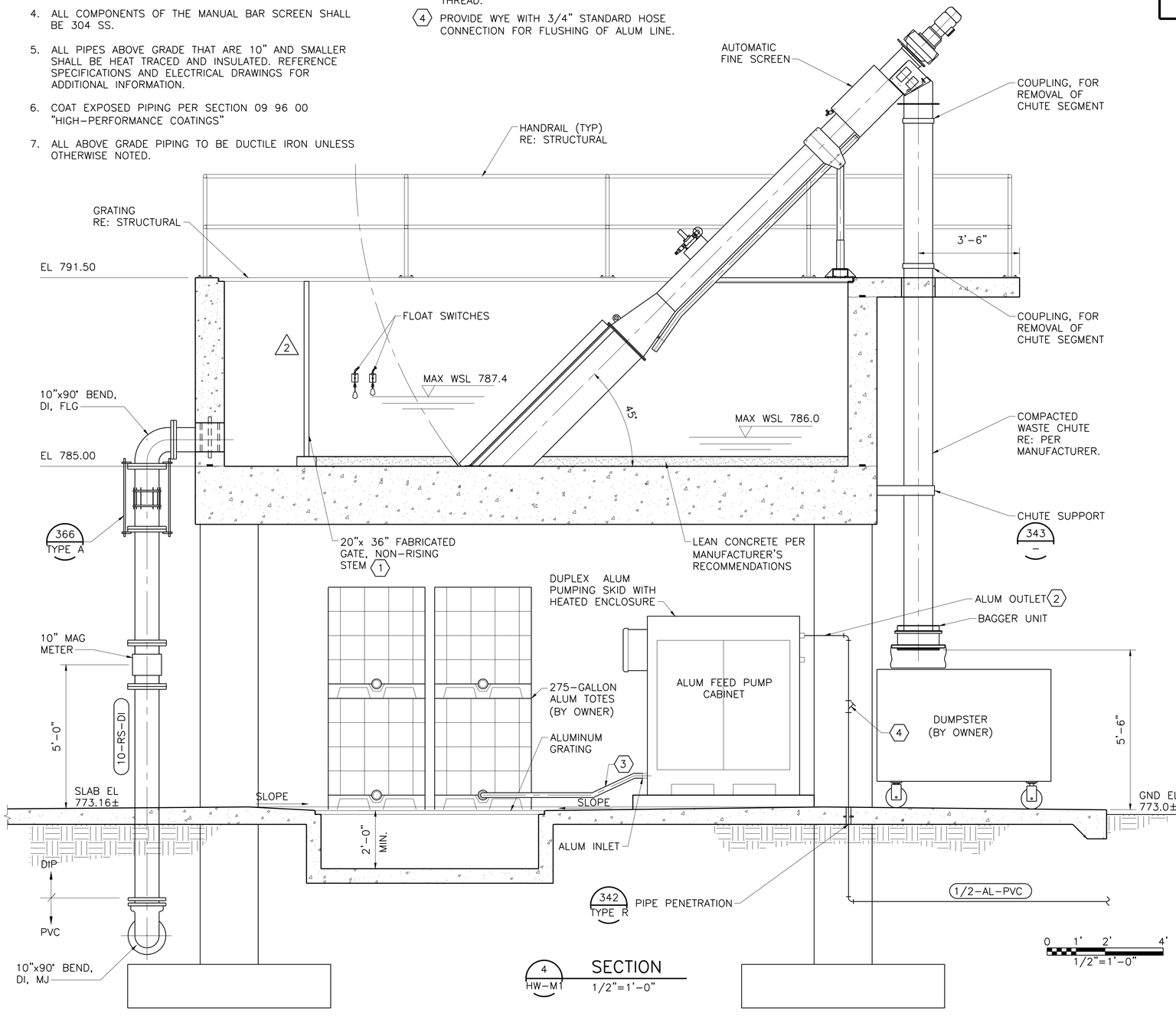

4 HW-M1 SECTION 1/2"=1'-0"

This Record Drawing is a combination of the sealed engineering contract drawings for this project, modified by information furnished by the contractor reflecting changes in the Project made during construction. The original sealed drawings are on file at the offices of FREESE AND NICHOLS, INC.
RECORD DRAWINGS PREPARED ON: 06/24/20

Freese and Nichols, Inc.
Texas Registered Engineering Firm F-2144

THE SEAL THAT ORIGINALLY APPEARED ON THIS DOCUMENT WAS AUTHORIZED BY JEREMY BERGER, P.E.
THIS DOCUMENT IS RELEASED FOR THE PURPOSE OF INTERIM REVIEW ONLY. IT IS NOT TO BE USED FOR BIDDING, PERMITTING, CONSTRUCTION, RECORDATION, CONVEYANCE, OR AS PART OF ANY CONTRACT. IT IS NOT TO BE ALTERED WITHOUT THE PRESENCE OF A SEALED DOCUMENT WITHOUT PROPER AUTHORIZATION. ALTERATION OF A SEALED DOCUMENT WITHOUT PROPER AUTHORIZATION AND SEAL IS A VIOLATION OF THE TEXAS ENGINEERING PRACTICE ACT AND IS AN OFFENSE UNDER THE TEXAS ENGINEERING PRACTICE ACT

FREESE AND NICHOLS
4040 Broadway Street, Suite 600
San Antonio, Texas 78209-6350
Phone - (210) 538-5500
Fax - (210) 826-2901
Web - www.freese.com

CITY OF CASTROVILLE

WWTP CAPACITY EXPANSION PROJECT

HEADWORKS FACILITY MECHANICAL ELEVATION AND SECTIONS

FBN JOB NO.	CVL14259
DATE	6/10/16
DESIGNED	CCC
DRAWN	DDH
CHECKED	TWS
FILE NAME	WW-HDW-SC-PIPE02.dwg

NO.	ISSUE	BY	DATE
1	RECORD DRAWINGS	GB	06/24/20
0	ISSUED FOR CONSTRUCTION	GB	11/16/16

VERIFY SCALE Bar is one inch on original drawing. If not one inch on this sheet, adjust scale.
0 1"

SHEET HW-M2
SEQ.

ACAD Rel: 21.0s (LMS Tech)
Filename: N:\STANDARD\WW-HDW-SC-PIPE02.dwg
Last Saved: 6/18/2020 1:25 PM Saved By: 90119

Plot Date: 6/18/2020 5:00 PM Plot By: 90119 Filename: N:\STANDARD\WW-HDW-SC-PIPE02.dwg

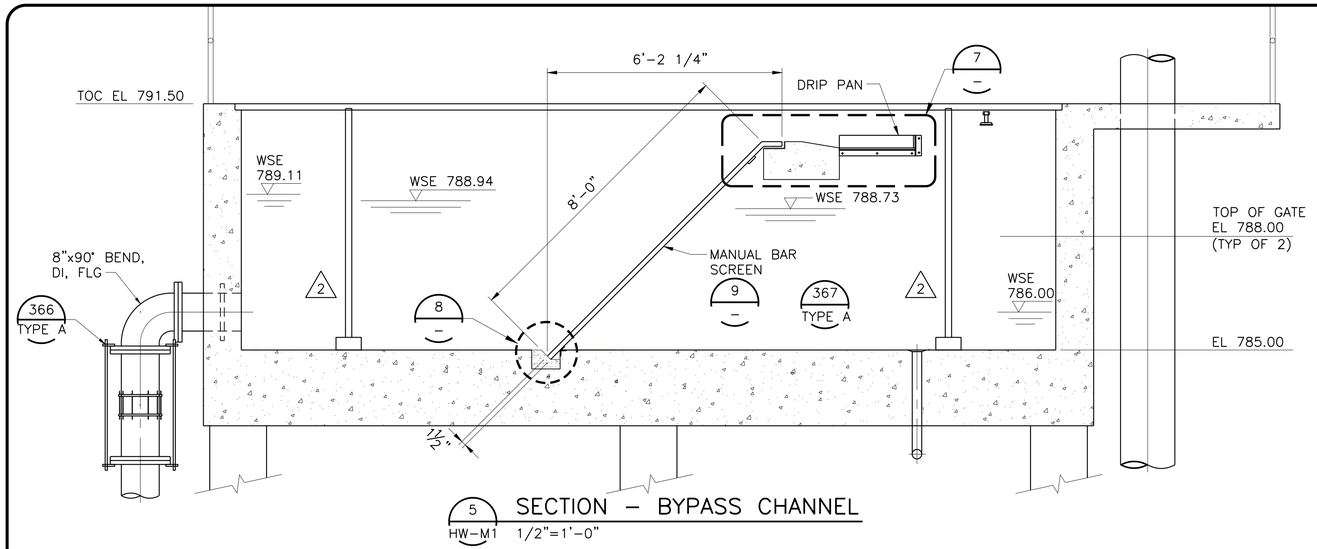

5 HW-M1 SECTION – BYPASS CHANNEL
1/2"=1'-0"

NOTES BY SYMBOL "⬡"

(1) 6" MAG-METER

(2) 8" MAG-METER

(3) 10" MAG-METER

GENERAL NOTES

1. REFER TO SPECIFICATION SECTION 01 35 00 FOR SPECIAL PROCEDURES AND CONSTRUCTION SEQUENCING.
2. ALL EQUIPMENT SHOWN ON THIS SHEET IS DESIGNED AROUND SPECIFIC MANUFACTURERS. IF ANOTHER APPROVED MANUFACTURER IS SELECTED, THE CONTRACTOR SHALL MODIFY THE DESIGN/ LAYOUT PER SELECTED MANUFACTURER'S RECOMMENDATION AT NO COST TO THE OWNER.
3. ALL GATES SHALL BE 304 SS WITH NON-RISING STEMS AS SHOWN.
4. ALL COMPONENTS OF THE MANUAL BAR SCREEN SHALL BE 304 SS
5. ALL PIPES ABOVE GRADE THAT ARE 10" AND SMALLER SHALL BE HEAT TRACED AND INSULATED. REFERENCE SPECIFICATIONS AND ELECTRICAL DRAWINGS FOR ADDITIONAL INFORMATION.

This Record Drawing is a combination of the sealed engineering contract drawings for this project, modified by information furnished by the contractor reflecting changes in the Project made during construction. The original sealed drawings are on file at the offices of
FREESE AND NICHOLS, INC.
RECORD DRAWINGS PREPARED ON:
06/24/20

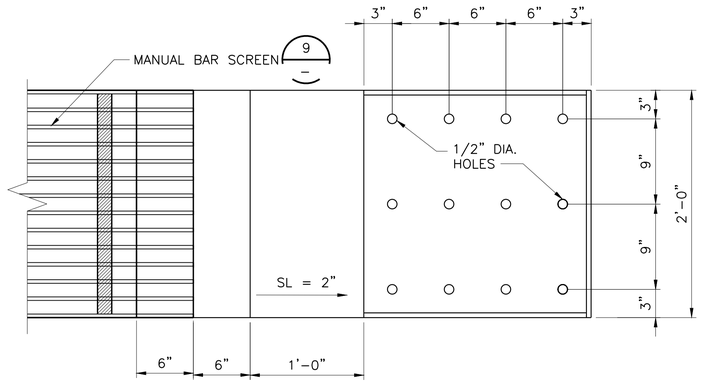

6 DETAIL – DRIP PAN
1 1/2"=1'-0"

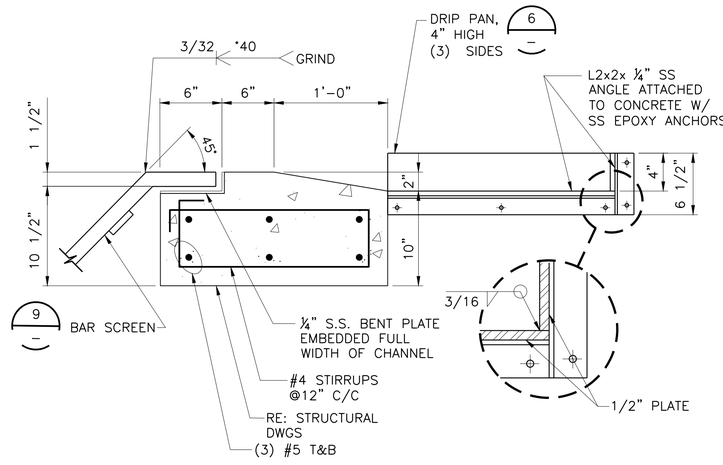

7 DETAIL
1 1/2"=1'-0"

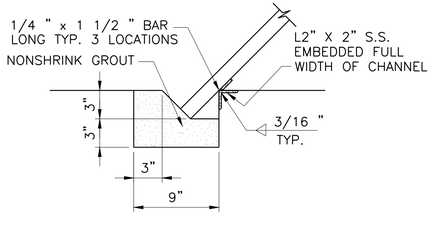

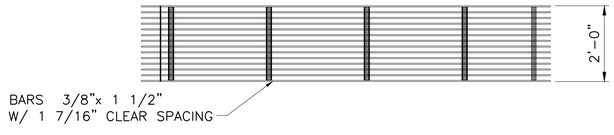

8 DETAIL–BAR SCREEN @ CHANNEL FLOOR
1 1/2"=1'-0"

9 PLAN – MANUAL BAR SCREEN
1/2"=1'-0"

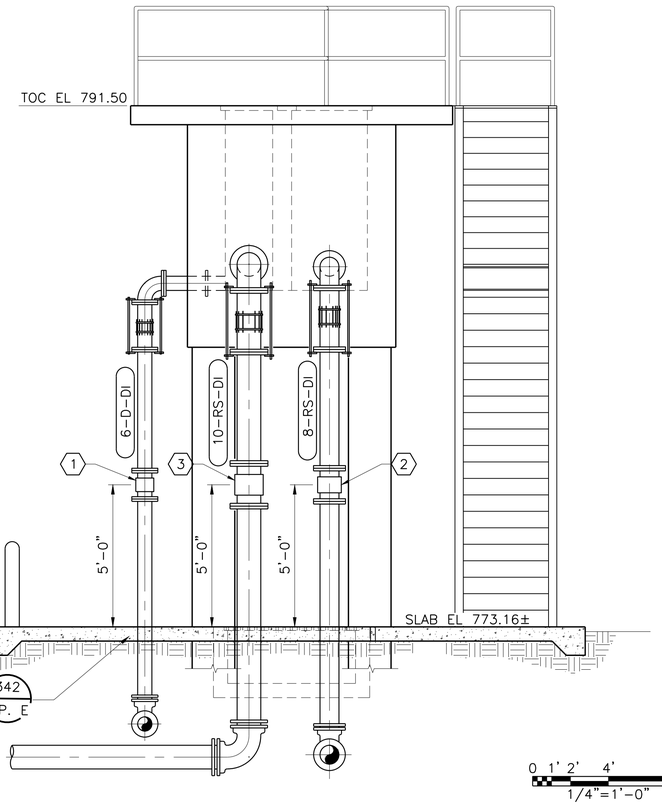

6 HW-M1 ELEVATION
3/8"=1'-0"

0 1' 2' 4' 8'
1/4"=1'-0"
0 1' 2' 4'
1/2"=1'-0"
0 4" 8" 1'
1-1/2"=1'-0"

Freese and Nichols, Inc.
Texas Registered Engineering Firm F-2144

THE SEAL HAS ORIGINALLY APPEARED ON THIS DOCUMENT WAS AUTHORIZED BY DENNIS BOSCHER P.E. ON ____
ALTERATION OF A SEALED DOCUMENT WITHOUT PROPER AUTHORITY TO DO SO IS PROHIBITED BY LAW AND MAY BE PUNISHABLE AS A CRIMINAL OFFENSE UNDER THE TEXAS ENGINEERING PRACTICE ACT

FREESE NICHOLS
4040 Broadway Street, Suite 600
San Antonio, Texas 78209-6350
Phone – (210) 829-3800
Fax – (210) 841-7401
Web – www.freese.com

CITY OF CASTROVILLE
WWTP CAPACITY EXPANSION PROJECT
MECHANICAL
HEADWORKS FACILITY
SECTION AND DETAILS

NO.	ISSUE	BY	DATE
	RECORD DRAWINGS	GB	06/24/20
1	ISSUED FOR CONSTRUCTION	GB	11/16/16

VERIFY SCALE Bar is one inch on original drawing. If not one inch on this sheet, adjust scale.

F&N JOB NO. CVL14259
DATE 6/10/16
DESIGNED GB
DRAWN MAJ
CHECKED TWS
FILE NAME WW-HDW-PL-PIPE02.dwg

SHEET HW-M3
SEQ.

ACAD Rel: 21.0s (LMS Tech)
Filename: N:\WW\Drawings\WW-HDW-PL-PIPE02.dwg
Last Saved: 10/9/2019 12:07 PM Saved By: 03576

Plot Date: 6/18/2020 5:00 PM Plot By: 90119 Filename: N:\WW\Drawings\WW-HDW-PL-PIPE02.dwg

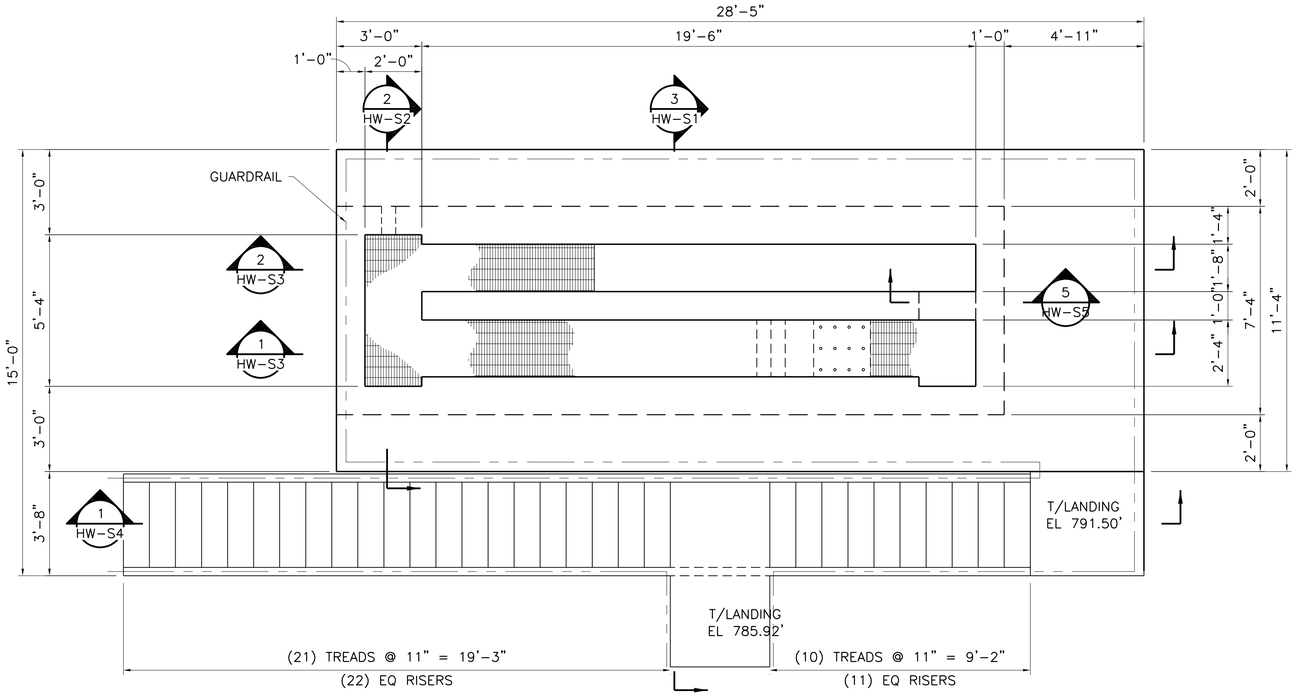

NORTH 1/— TOP PLAN
3/8"=1'-0"

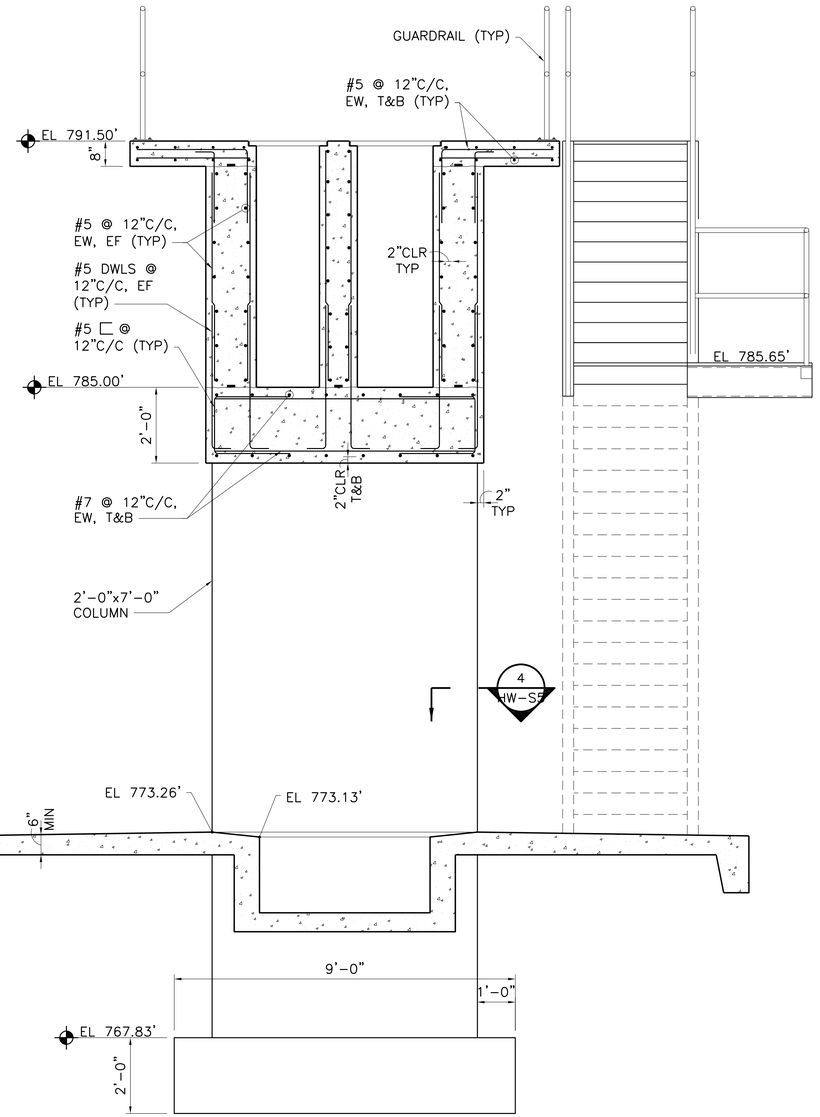

3 HW-S1 SECTION
1/2"=1'-0"

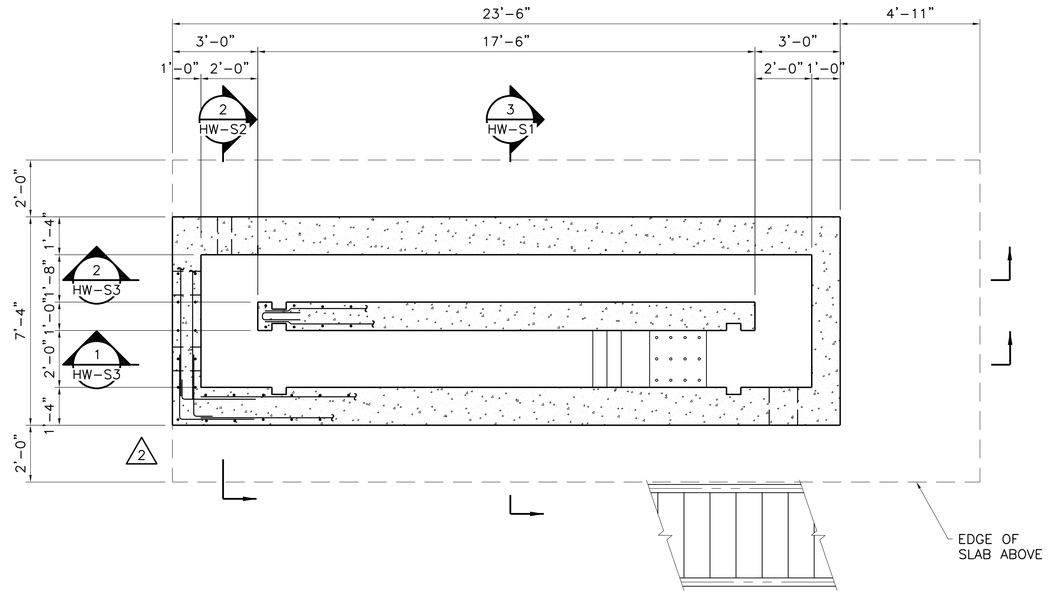

NORTH 2/— SECTIONAL PLAN @ EL 790.75'
3/8"=1'-0"

0 1' 2' 4'
3/8"=1'-0

This Record Drawing is a combination of the sealed engineering contract drawings for this project, modified by information furnished by the contractor reflecting changes in the Project made during construction. The original sealed drawings are on file at the offices of
FREESE AND NICHOLS, INC.
RECORD DRAWINGS PREPARED ON:
6/24/2020

Freese and Nichols, Inc.
Texas Registered Engineering Firm F-2144

THE SEAL APPEARING ON THIS DOCUMENT WAS AUTHORIZED BY JAMES W. LEMLEY, P.E.
TEXAS NO. 92201
DATE: 06/24/2020
IT IS A VIOLATION OF THE ENGINEERING PRACTICE ACT FOR ANY PERSON TO ALTER THIS DOCUMENT WITHOUT PROPER AUTHORIZATION OF THE RESPONSIBLE ENGINEER NAMED HEREON
IT IS A VIOLATION OF THE ENGINEERING PRACTICE ACT FOR ANY PERSON NOT REGISTERED WITH THE TEXAS BOARD OF PROFESSIONAL ENGINEERS TO PRACTICE ENGINEERING IN THE STATE OF TEXAS UNLESS EXEMPTED BY SECTION 1001.407 OF THE ACT
IT IS A VIOLATION OF THE ENGINEERING PRACTICE ACT FOR ANY PERSON TO PRACTICE ENGINEERING UNDER THE TEXAS ENGINEERING PRACTICE ACT.

FREESE NICHOLS
4040 Broadway Street, Suite 600
San Antonio, Texas 78209-6350
Phone - (210) 829-3800
Fax - (210) 298-3801
Web - www.freese.com

CITY OF CASTROVILLE
WWTP CAPACITY EXPANSION PROJECT
STRUCTURAL
HEADWORKS FACILITY
TOP & SECTIONAL PLANS

NO.	ISSUE	BY	DATE
1	RECORD DRAWING	MRR	06/24/20
0	ISSUED FOR CONSTRUCTION	MRR	11/16/16

VERIFY SCALE Bar is one inch on original drawing. If not one inch on this sheet, adjust scale.
0 1"

F&N JOB NO. CVL14259
DATE 6/10/16
DESIGNED MRR
DRAWN JAW/JLM
CHECKED AD
FILE NAME ST-HDW-PL-TOPP.dwg

SHEET HW-S1
SEQ.

ACAD Rel: 21.0s (LMS Tech)
Filename: N:\ST\ST-HDW-PL-TOPP.dwg
Last Saved: 6/18/2020 10:35 AM Saved By: 02198

Plot Date: 6/18/2020 11:11 AM Plot By: 02198 Filename: N:\ST\ST-HDW-PL-TOPP.dwg

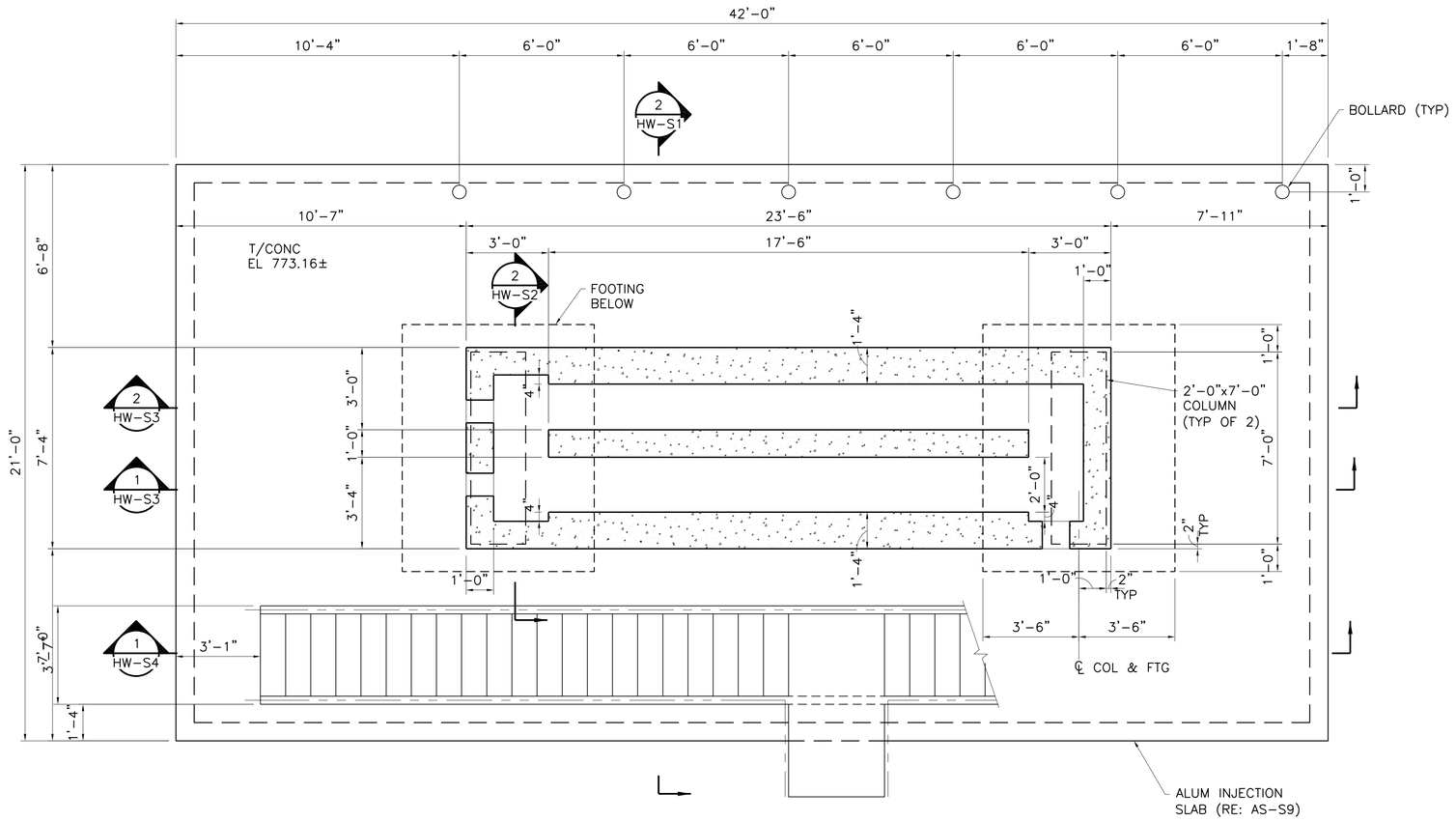

1 SECTIONAL PLAN @ EL 786.00'
3/8"=1'-0"

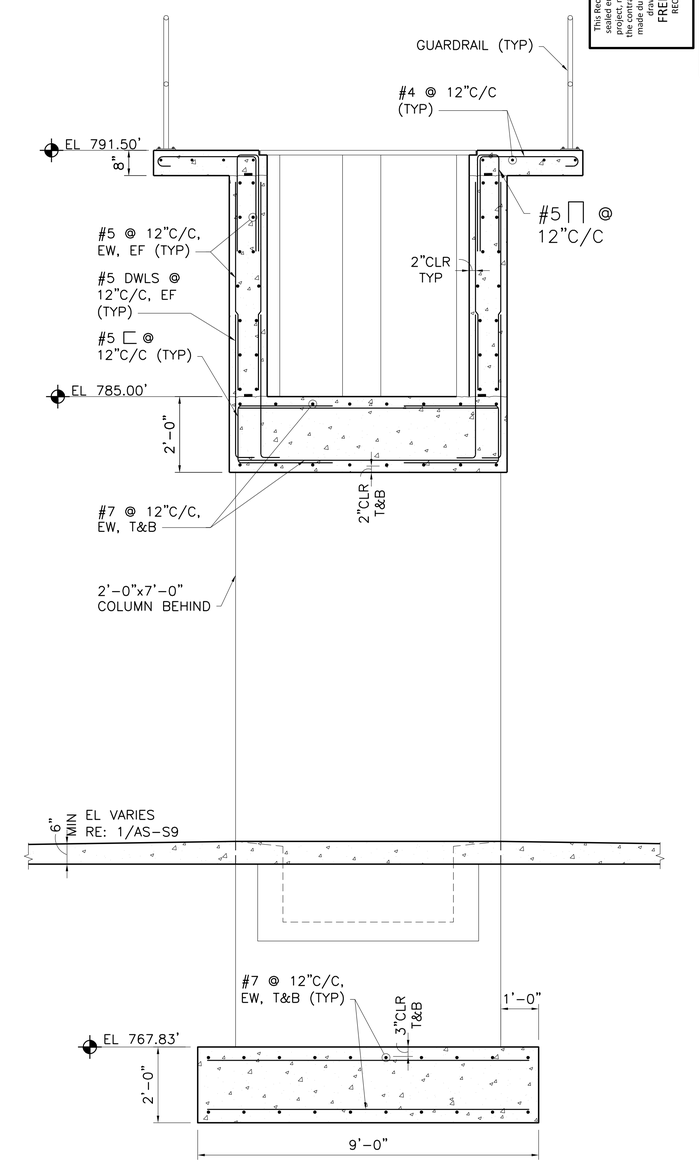

2 HW-S1 SECTION
1/2"=1'-0"

0 1' 2' 4' 8'
1/4"=1'-0"
0 1' 2' 4'
1/2"=1'-0"
0 1' 2' 4'
3/8"=1'-0

This Record Drawing is a combination of the sealed engineering contract drawings for this project, modified by information furnished by the contractor reflecting changes in the Project made during construction. The original sealed drawings are on file at the offices of FREESE AND NICHOLS, INC.
RECORD DRAWINGS PREPARED ON: 6/24/2020

Freese and Nichols, Inc.
Texas Registered Engineering Firm F-2144

THE SEAL APPEARING ON THIS DOCUMENT WAS AUTHORIZED BY: MICHAEL KAY ROBERTSON, P.E. TEXAS NO. 50201 ON: 06/10/2016. ALTERATION OF A SEALED DOCUMENT WITHOUT PROPER NOTIFICATION OF THE RESPONSIBLE ENGINEER IS AN OFFENSE UNDER THE TEXAS ENGINEERING PRACTICE ACT.

FREESE AND NICHOLS
4040 Broadway Street, Suite 600
San Antonio, Texas 78209-6350
Phone - (210) 298-3800
Fax - (210) 298-3801
Web - www.freese.com

CITY OF CASTROVILLE
WWTP CAPACITY EXPANSION PROJECT
STRUCTURAL
HEADWORKS FACILITY
SECTIONAL PLAN

NO.	ISSUE	BY	DATE
2	RECORD DRAWING	MRR	06/24/20
1	ISSUED FOR CONSTRUCTION	MRR	11/16/16

F&N JOB NO. CVL14259
DATE 6/10/16
DESIGNED MRR
DRAWN JAW/JLM
REVISED
CHECKED AD
FILE NAME ST-HDW-PL-SECT01.dwg

VERIFY SCALE 0 1
Bar is one inch on original drawing. If not one inch on this sheet, adjust scale.

SHEET HW-S2
SEQ.

ACAD Rel: 21.0s (LMS Tech)
Filename: N:\ST\ST-HDW-PL-SECT01.dwg
Last Saved: 6/18/2020 10:40 AM Saved By: 02198

Plot Date: 6/18/2020 11:12 AM Plot By: 02198 Filename: N:\ST\ST-HDW-PL-SECT01.dwg

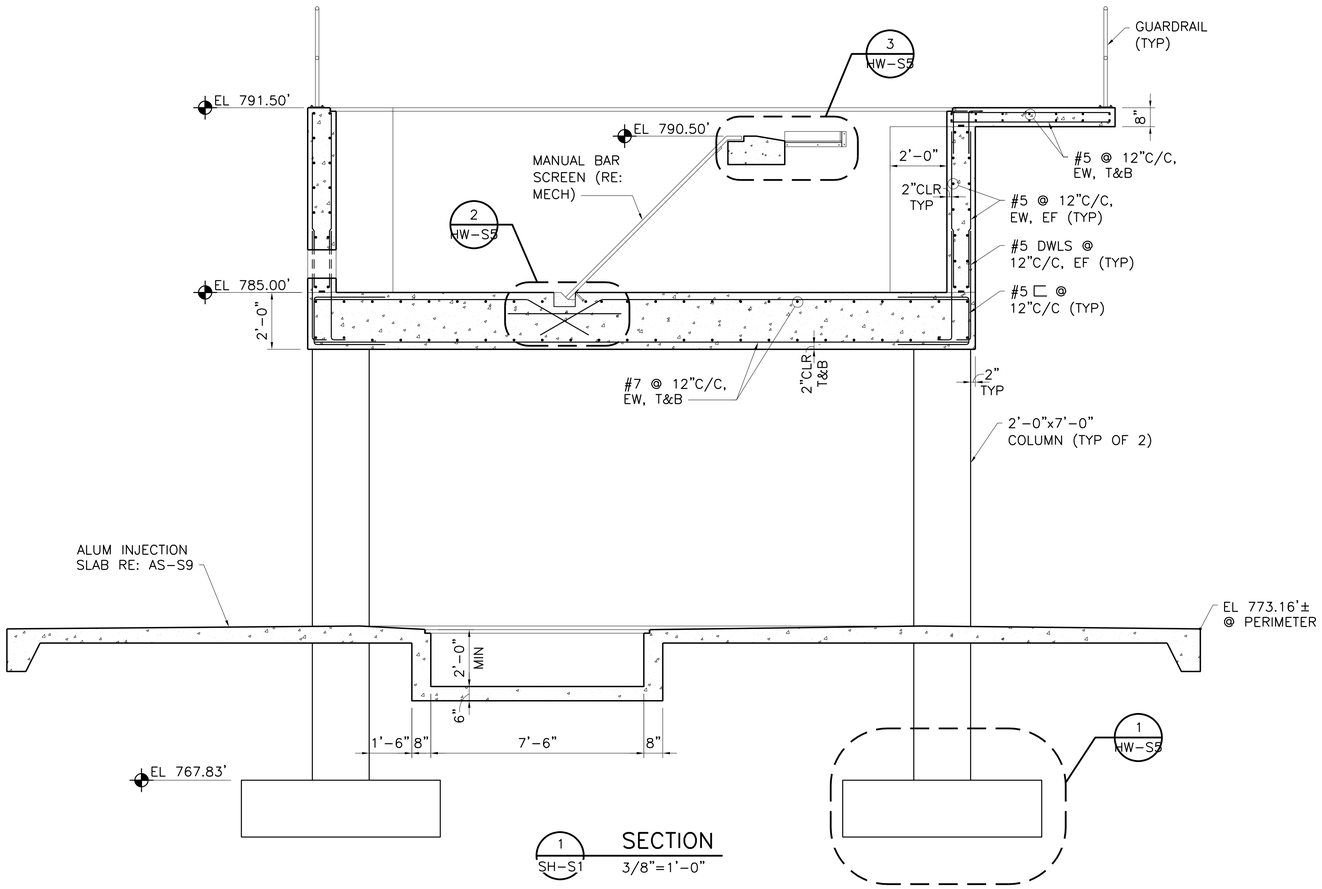

1 SH-S1 **SECTION** 3/8"=1'-0"

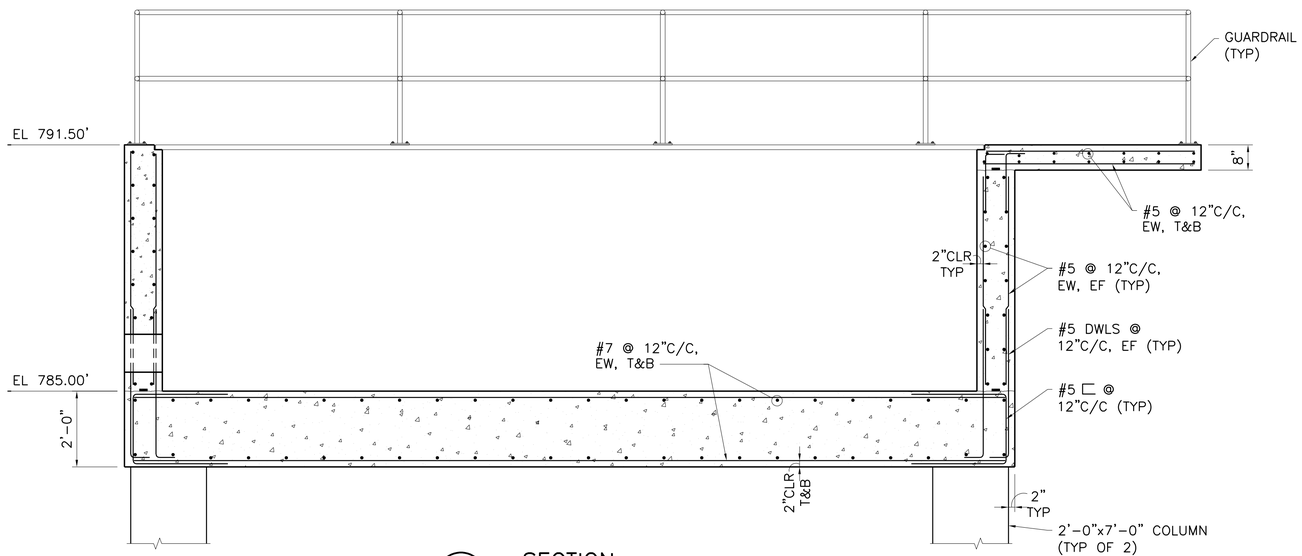

2 SH-S1 **SECTION** 1/2"=1'-0"

0 1' 2' 4'
1/2"=1'-0"

0 1' 2' 4'
3/8"=1'-0

This Record Drawing is a combination of the sealed engineering contract drawings for this project, modified by information furnished by the contractor reflecting changes in the Project made during construction. The original sealed drawings are on file at the offices of
FREESE AND NICHOLS, INC.
RECORD DRAWINGS PREPARED ON: 6/24/2020

Freese and Nichols, Inc.
Texas Registered Engineering Firm F-2144

THE SEAL APPEARING ON THIS DOCUMENT WAS AUTHORIZED BY JAMES L. MURPHY, P.E. TEXAS NO. 92201 DATE: 6/24/2020
IT IS A VIOLATION OF THE ENGINEERING PRACTICE ACT FOR ANY PERSON TO ALTER THIS DOCUMENT IN ANY MANNER WITHOUT THE NOTIFICATION OF THE RESPONSIBLE ENGINEER NAMED HEREON AND THE ADDITION OF THE WORD "RELEASED" AND THE DATE OF RELEASE UNDER THE TEXAS ENGINEERING PRACTICE ACT.

FREESE NICHOLS
4040 Broadway Street, Suite 600
San Antonio, Texas 78209-6350
Phone: (210) 298-3800
Fax: (210) 298-3801
Web - www.freese.com

CITY OF CASTROVILLE

WWTP CAPACITY EXPANSION PROJECT

STRUCTURAL

HEADWORKS FACILITY SECTIONS

NO.	ISSUE	BY	DATE
	RECORD DRAWING	MRR	06/24/20
1	ISSUED FOR CONSTRUCTION	MRR	11/16/16

FAN JOB NO. CVL14259
DATE 6/10/16
DESIGNED MRR
DRAWN JAW/JLM
CHECKED AD
FILE NAME ST-HDW-SC-CONC01.dwg

VERIFY SCALE Bar is one inch on original drawing. If not one inch on this sheet, adjust scale.
0 1"

SHEET HW-S3
SEQ.

ACAD Rel: 21.0s (LMS Tech)
Filename: N:\ST\ST-HDW-SC-CONC01.dwg
Last Saved: 6/18/2020 10:43 AM Saved By: 02198

Plot Date: 6/18/2020 11:12 AM Plot By: 02198 Filename: N:\ST\ST-HDW-SC-CONC01.dwg

1 HW-S4 SECTION
3/8"=1'-0"

0 1' 2' 4'
3/8"=1'-0

This Record Drawing is a combination of the sealed engineering contract drawings for this project, modified by information furnished by the contractor reflecting changes in the Project made during construction. The original sealed drawings are on file at the offices of
FREESE AND NICHOLS, INC.
RECORD DRAWINGS PREPARED ON:
6/24/2020

Freese and Nichols, Inc.
Texas Registered Engineering Firm F-2144

THE SEAL APPEARING ON THIS DOCUMENT WAS AUTHORIZED BY MARK R. REED, P.E. TEXAS NO. 92201 DATE: 06/24/2020
IT IS A VIOLATION OF THE TEXAS ENGINEERING PRACTICE ACT FOR ANY PERSON UNLESS ACTING UNDER THE DIRECTION OF THE RESPONSIBLE ENGINEER TO ALTER THIS DOCUMENT IN ANY WAY. ANY ENGINEER WHO ALTERS THIS DOCUMENT IS SUBJECT TO REPRIMAND AND ADMINISTRATIVE PENALTY BY THE TEXAS BOARD OF PROFESSIONAL ENGINEERS UNDER THE TEXAS ENGINEERING PRACTICE ACT.

FREESE AND NICHOLS
4040 Broadway Street, Suite 600
San Antonio, Texas 78209-6350
Phone - (210) 829-3800
Fax - (210) 298-1801
Web - www.freese.com

CITY OF CASTROVILLE

WWTP CAPACITY EXPANSION PROJECT

STRUCTURAL

HEADWORKS FACILITY
STAIR SECTION AND DETAILS

NO.	ISSUE	BY	DATE
2	RECORD DRAWING	MRR	06/24/20
1	ISSUED FOR CONSTRUCTION	MRR	11/16/16

VERIFY SCALE Bar is one inch on original drawing. If not one inch on this sheet, adjust scale.
0 1"

FAN JOB NO.	CVL14259
DATE	6/10/16
DESIGNED	MRR
DRAWN	JAW/JLM
CHECKED	AD
FILE NAME	ST-HDW-SC-STAR01.dwg

SHEET
HW-S4
SEQ.

ACAD Rel: 21.0s (LMS Tech)
Filename: N:\ST\ST-HDW-SC-STAR01.dwg
Last Saved: 6/18/2020 10:45 AM Saved By: 02198

Plot Date: 6/18/2020 11:13 AM Plot By: 02198 Filename: N:\ST\ST-HDW-SC-STAR01.dwg

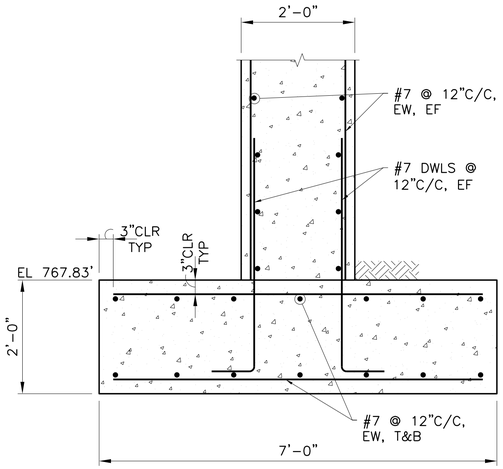

1 HW-S3 **FOOTING DETAIL**
3/4"=1'-0"

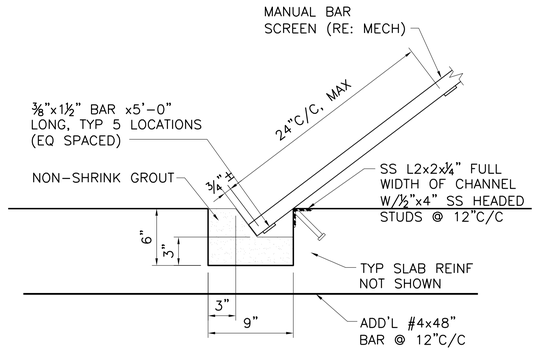

2 HW-S3 **BAR SCREEN SILL BLOCKOUT DETAIL**
1 1/2"=1'-0"

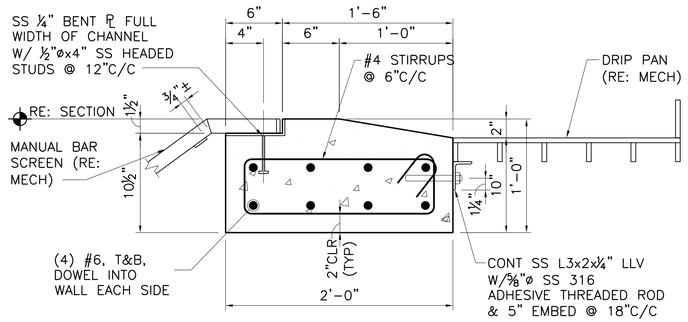

3 HW-S3 **BAR SCREEN SUPPORT DETAIL**
1 1/2"=1'-0"

4 HW-S1 **COLUMN END SECTION**
3/4"=1'-0"

5 HW-S1 **SECTION**
1"=1'-0"

0 4" 8" 1'
1-1/2"=1'-0"
0 6" 1' 2'
1"=1'-0"
0 6" 1' 2'
3/4"=1'-0

This Record Drawing is a combination of the sealed engineering contract drawings for this project, modified by information furnished by the contractor reflecting changes in the Project made during construction. The original sealed drawings are on file at the offices of FREESE AND NICHOLS, INC.
RECORD DRAWINGS PREPARED ON: 6/24/2020

THE SEAL APPEARING ON THIS DOCUMENT WAS AUTHORIZED BY JAMES A. WHITTEMORE, P.E. TEXAS NO. 92201 DATE: 6/24/2020
IT IS A VIOLATION OF LAW FOR ANY PERSON, UNLESS ACTING UNDER THE DIRECTION OF THE RESPONSIBLE ENGINEER, TO ALTER THIS DOCUMENT IN ANY WAY. 22 TAC 137.33(c) (2) BOARD RULES

Freese and Nichols, Inc.
Texas Registered Engineering Firm F-2144

FREESE NICHOLS

4040 Broadway Street, Suite 600
San Antonio, Texas 78209-6350
Phone - (210) 824-3800
Fax - (210) 298-3801
Web - www.freese.com

CITY OF CASTROVILLE

WWTP CAPACITY EXPANSION PROJECT

STRUCTURAL

HEADWORKS FACILITY SECTIONS AND DETAILS

F&N JOB NO. CVL14259
DATE 6/10/16
DESIGNED MRR
DRAWN JAW/JLM
CHECKED AD
FILE NAME ST-HDW-SC-CONC02.dwg

NO.	ISSUE	BY	DATE
1	RECORD DRAWING	MRR	06/24/20
A	ISSUED FOR CONSTRUCTION	MRR	11/16/16

VERIFY SCALE Bar is one inch on original drawing. If not one inch on this sheet, adjust scale.
0 1"

SHEET HW-S5
SEQ.

ACAD Rel: 21.0s (LMS Tech)
Filename: N:\ST\ST-HDW-SC-CONC02.dwg
Last Saved: 6/18/2020 10:47 AM Saved By: 02198

Plot Date: 6/18/2020 11:13 AM Plot By: 02198 Filename: N:\ST\ST-HDW-SC-CONC02.dwg

HEADWORKS BUILDING
SEE SHT. HW-M1

ACCESS STAIRS
RE: STRUCTURAL (TYP.)

EFFLUENT BOX

3 AS-M2 & 4 AS-M2 (SIM.)

2-10" 90° BEND, DI, MJ

10" 45° BEND, DI, MJ

10-ML-DI

WALL PENETRATION

342 TYPE F

1 AS-M3 ELIMINATIR GATE

2 AS-M3 VERTICAL AERATOR (TYP. OF 2)

HAND RAIL

DO PROBE (TYP. OF 2)

19'-6"

15'-9"

FLOW

16'-4"R

1

2'-6"

CAROUSEL BASIN NO. 1

20'R

BERNOULI BUMP
RE: STRUCTURAL

3 AS-M3 SUBMERSIBLE MIXER W/ JIB CRANE (TYP. OF 2)

ORP PROBE

14-RS-DI

FL EL 770.00

342 TYPE F

5'-0"

1 AS-M2 FLOW SPLITTER BOX

PROP. 14" RESTRAINED FLEXIBLE COUPLING

PROP. WEIR WALL

2 AS-M2 DIVERTER GATE

NORTH

1 PLAN VIEW
3/16" = 1'-0"

VERTICAL AERATOR (TYP. OF 2)

JIB CRANE

2 AS-M2 FLOW SPLITTER BOX

W.S. EL. 779.53

VELOCITY ENHANCER

FLOW

T.O.S. EL. 768.03

FLOWABLE FILL
RE: STRUCTURAL

8" MUD VALVE

14-RS-DI

CL EL 762.70

342 TYPE F WALL PENETRATION

14" 90° BEND, DI, MJ

2 SECTION VIEW
3/16" = 1'-0"

This Record Drawing is a combination of the sealed engineering contract drawings for this project, modified by information furnished by the contractor reflecting changes in the Project made during construction. The original sealed drawings are on file at the offices of
FREESE AND NICHOLS, INC.
RECORD DRAWINGS PREPARED ON:
06/24/20

0 4' 8'
3/16"=1'-0"

Freese and Nichols, Inc.
Texas Registered Engineering Firm F-2144

FREESE NICHOLS
4040 Broadway Street, Suite 600
San Antonio, Texas 78209-6350
Phone: (210) 829-3500
Fax: (210) 841-7401
Web - www.freese.com

THE SEAL THAT ORIGINALLY APPEARED ON THIS DOCUMENT WAS AUTHORIZED BY JOSEPH C. GOFF, P.E. ON 06/24/20. IT IS A VIOLATION OF A SEALED DOCUMENT WITHOUT PROPER ALTERATION OF A SEALED DOCUMENT WITHOUT PROPER NOTIFICATION TO THE ENGINEER IS A VIOLATION OF THE TEXAS ENGINEERING PRACTICE ACT

CITY OF CASTROVILLE

WWTP CAPACITY EXPANSION PROJECT

MECHANICAL

ACTIVATED SLUDGE (CARROUSEL BASIN)
TOP PLAN AND SECTION

F&N JOB NO. CVL14259
DATE 6/10/16
DESIGNED CCG
DRAWN KV
CHECKED TWS
FILE NAME WW-BNR-PL-MECH01.dwg

NO.	ISSUE	DATE	BY
1	RECORD DRAWINGS	06/24/20	CCG
2	RFI-006	1/17/17	CCG
3	ISSUED FOR CONSTRUCTION	11/16/16	CCG

VERIFY SCALE Bar is one inch on original drawing. If not one inch on this sheet, adjust scale.
0 1"

SHEET AS-M1
SEQ.

ACAD Rel: 21.0s (LMS Tech)
Filename: N:\WW\Drawings\WW-BNR-PL-MECH01.dwg
Last Saved: 10/9/2019 12:12 PM Saved By: 03576

Plot Date: 6/18/2020 5:03 PM Plot By: 90119 Filename: N:\WW\Drawings\WW-BNR-PL-MECH01.dwg

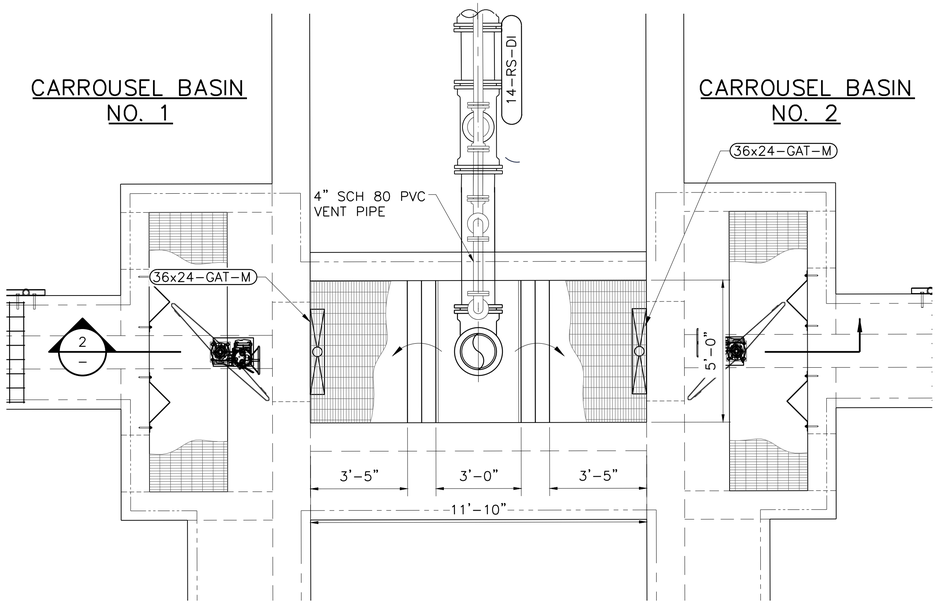

NORTH PLAN 3 AS-M2

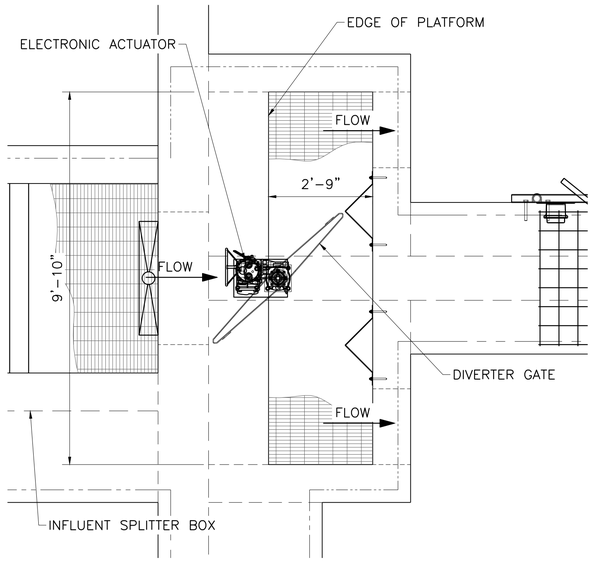

NORTH PLAN VIEW

2 AS-M2 DIVERTER GATE 1/2"=1'-0"

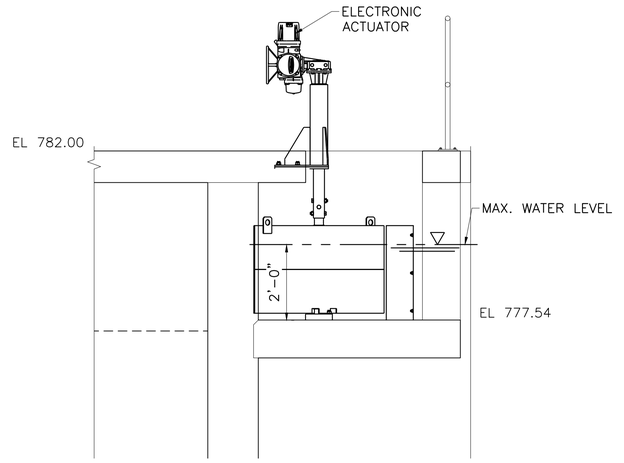

SECTION

NOTES BY SYMBOL "⬡"

1. PROVIDE UV RESISTANT COATING FOR EXPOSED PVC PER 09 96 00.01, "HIGH-PERFORMANCE COATINGS".

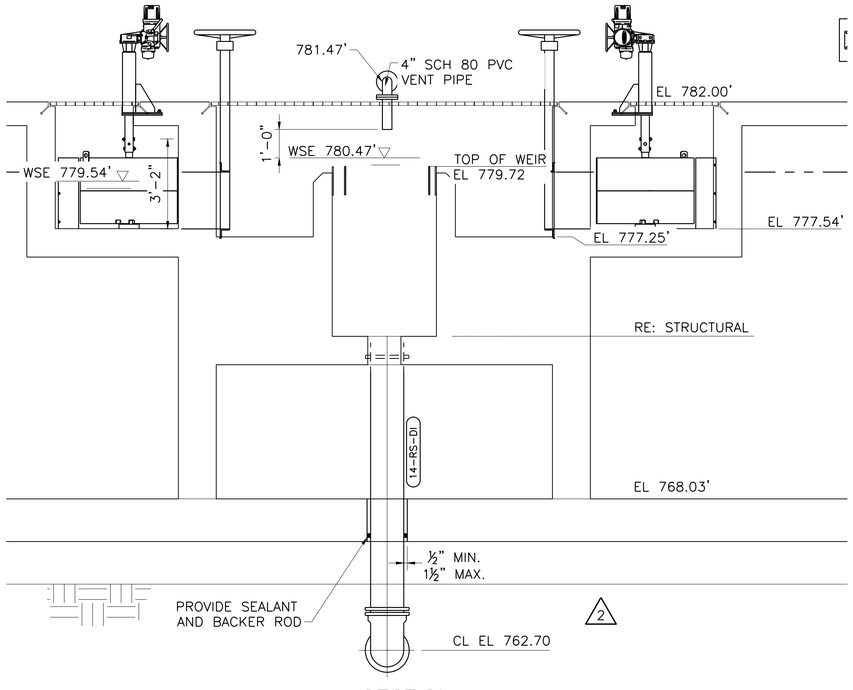

SECTION

1 AS-M2 INFLUENT SPLITTER BOX 3/8" = 1'-0"

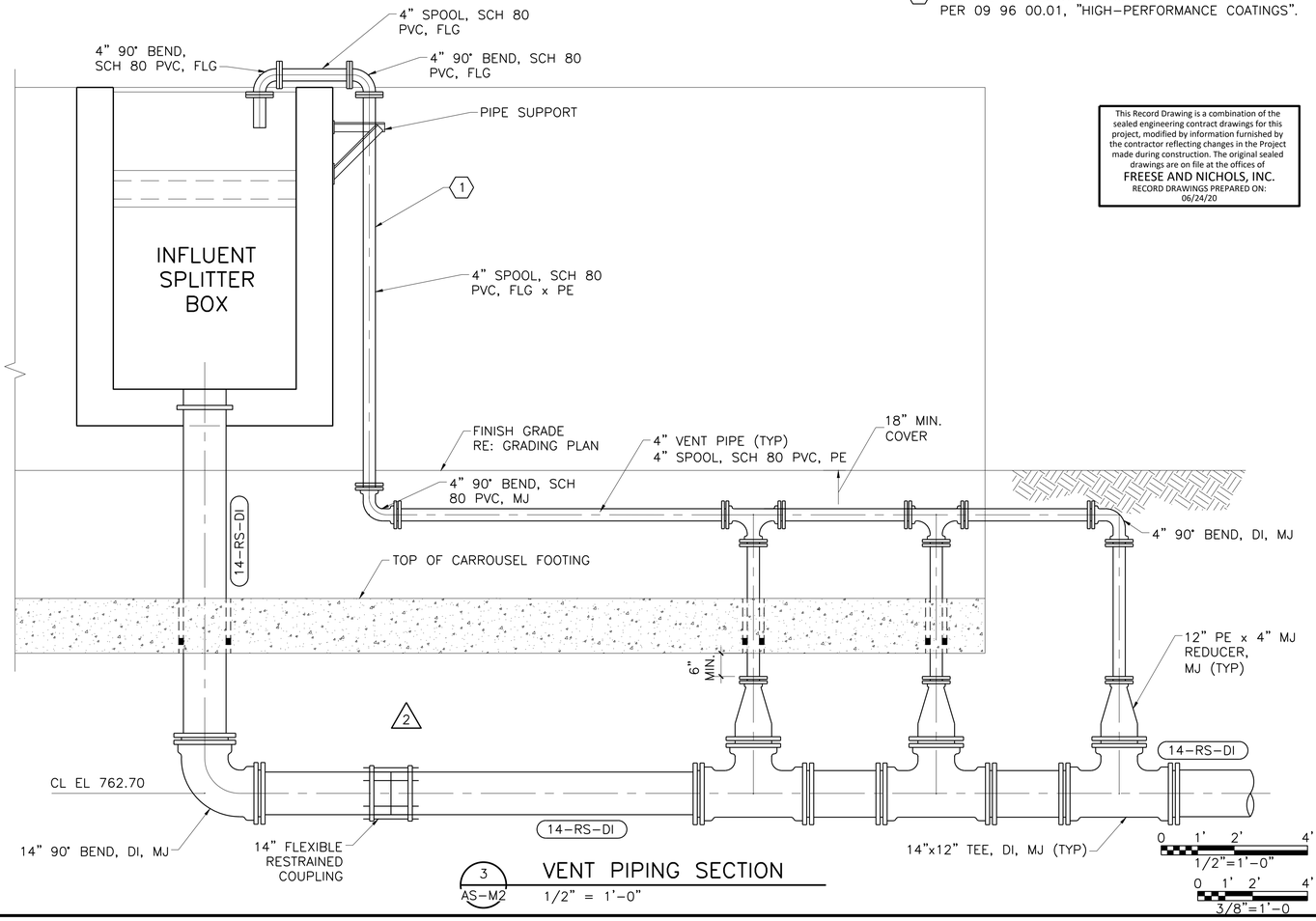

3 AS-M2 VENT PIPING SECTION 1/2" = 1'-0"

This Record Drawing is a combination of the sealed engineering contract drawings for this project, modified by information furnished by the contractor reflecting changes in the Project made during construction. The original sealed drawings are on file at the offices of FREESE AND NICHOLS, INC. RECORD DRAWINGS PREPARED ON: 06/24/20

Freese and Nichols, Inc.
Texas Registered Engineering Firm F-2144

THE SEAL THAT ORIGINALLY APPEARED ON THIS DOCUMENT WAS AUTHORIZED BY COBY C. GEE P.E. TEXAS NO. 118865 ON 08/10/2016. ALTERATION OF A SEALED DOCUMENT WITHOUT PROPER NOTIFICATION OF THE RESPONSIBLE ENGINEER IS A CIVIL OFFENSE UNDER THE TEXAS ENGINEERING PRACTICE ACT.

FREESE AND NICHOLS
4040 Broadway Street, Suite 600
San Antonio, Texas 78209-6350
Phone - (210) 298-3800
Fax - (210) 298-3801
Web - www.freese.com

CITY OF CASTROVILLE
WWTP CAPACITY EXPANSION PROJECT
MECHANICAL
ACTIVATED SLUDGE (CARROUSEL BASIN)
MISC. PLANS AND SECTIONS

NO.	ISSUE	BY	DATE
3	RECORD DRAWINGS	CCG	06/24/20
2	RFI-006	CCG	1/17/17
1	ISSUED FOR CONSTRUCTION	CCG	11/16/16

F&N JOB NO. CVL14259
DATE 6/10/16
DESIGNED CCG
DRAWN KV
REVISED
CHECKED TWS
FILE NAME WW-BNR-PS-MECH01.dwg

VERIFY SCALE 0 1 Bar is one inch on original drawing. If not one inch on this sheet, adjust scale.

SHEET AS-M2
SEQ.

ACAD Rel: 21.0s (LMS Tech)
Filename: N:\WW\Drawings\WW-BNR-PS-MECH01.dwg
Last Saved: 10/9/2019 12:31 PM Saved By: 03576

Plot Date: 6/18/2020 5:07 PM Plot By: 90119 Filename: N:\WW\Drawings\WW-BNR-PS-MECH01.dwg

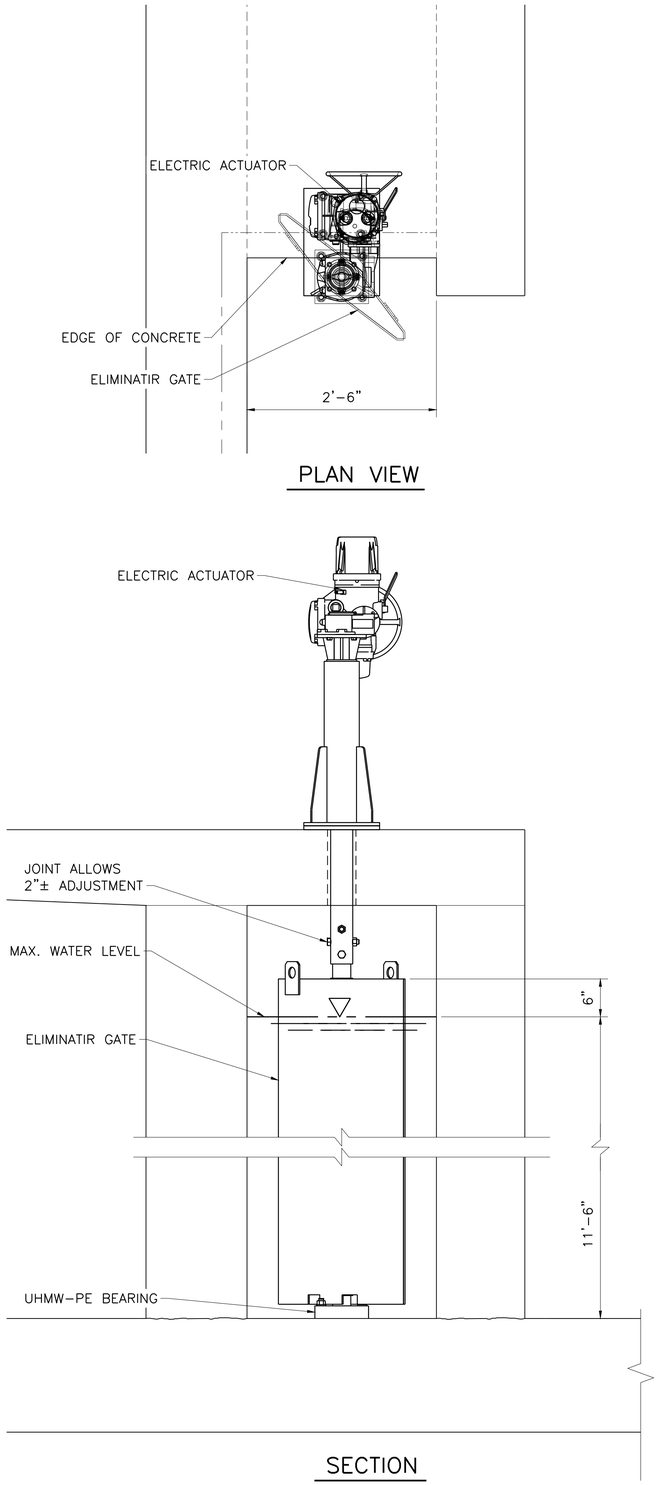

1 AS-M3 ELIMINATOR GATE
1"=1'-0"

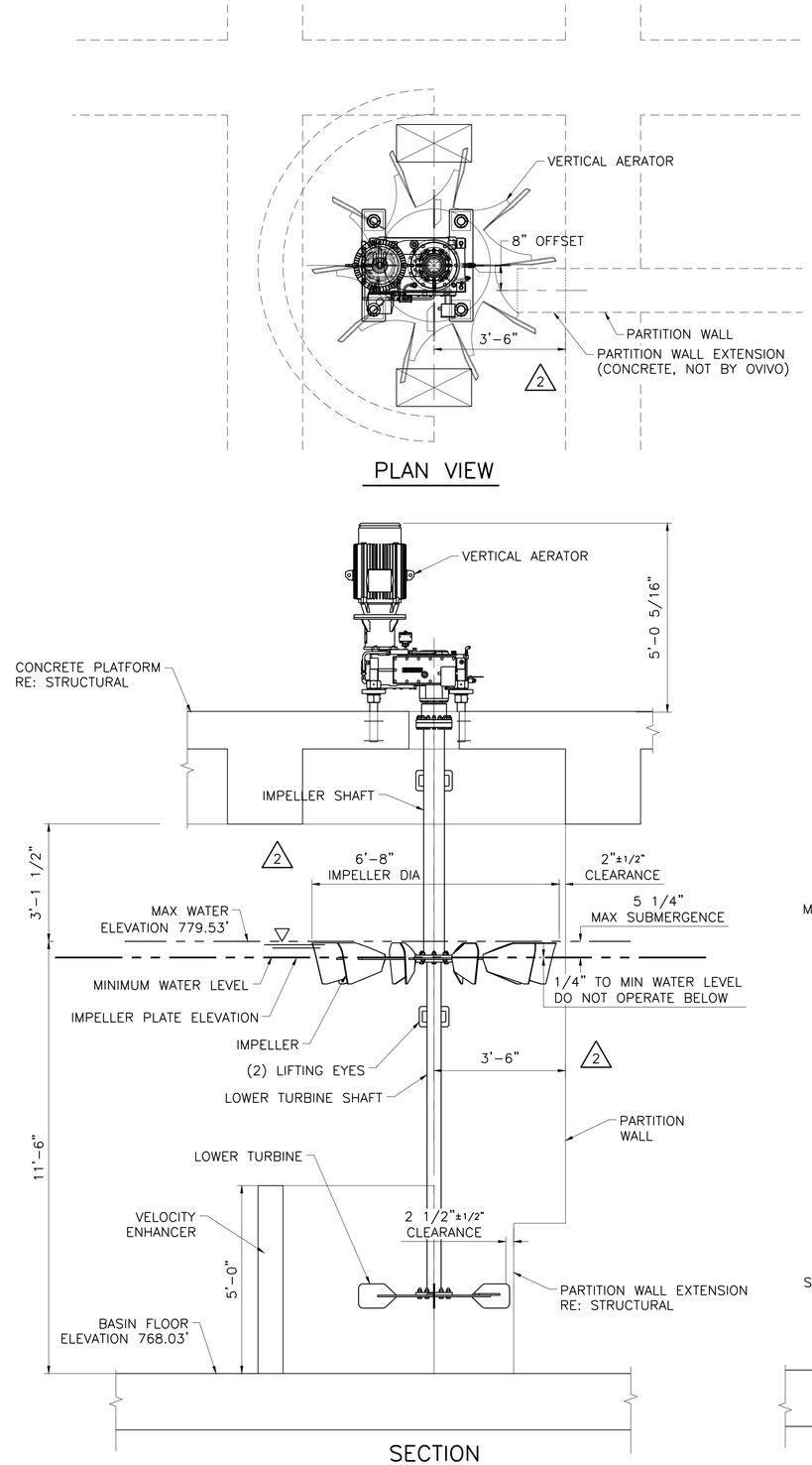

2 AS-M3 VERTICAL AERATOR
1/2"=1'-0"

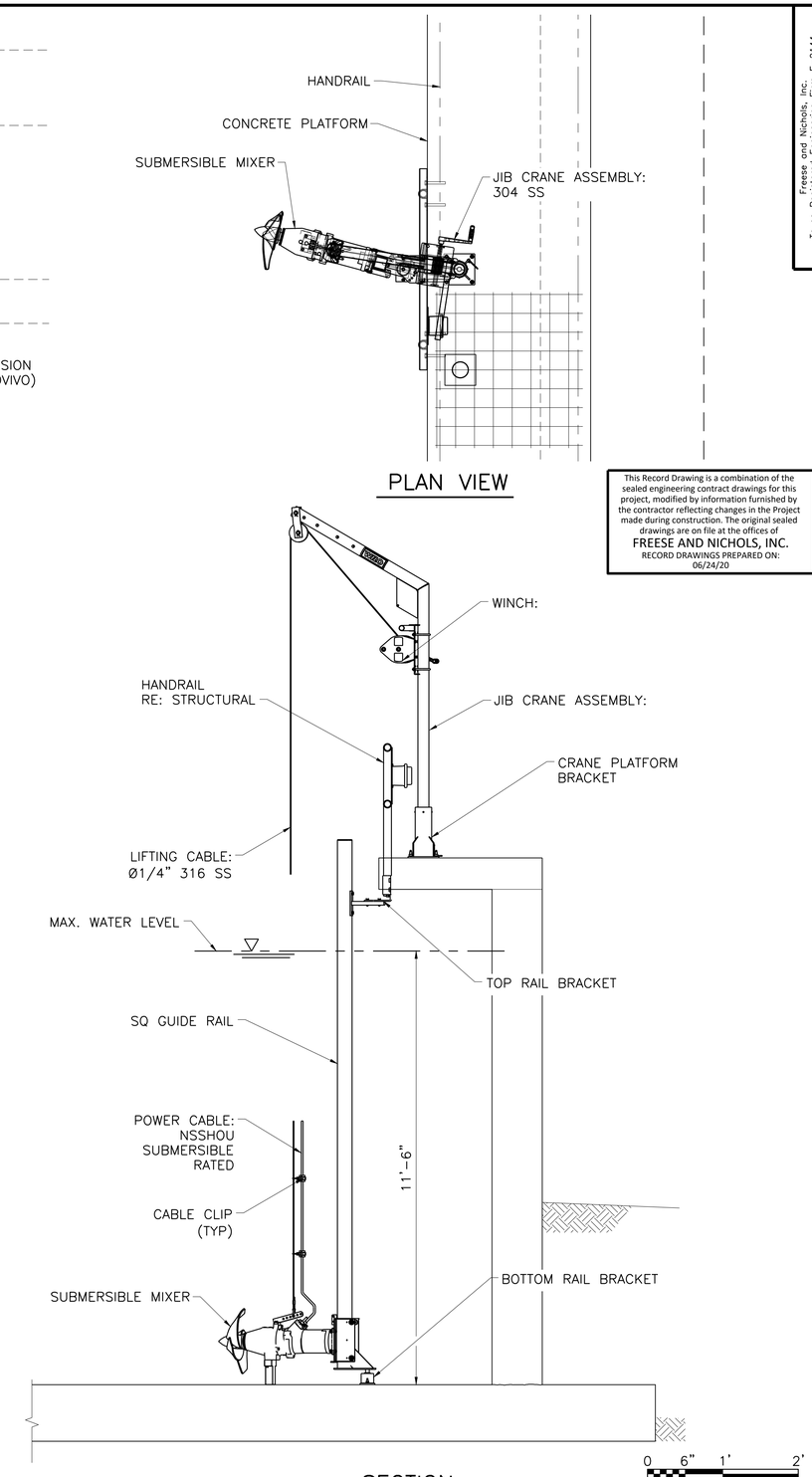

3 AS-M3 SUBMERSIBLE MIXER W/ JIB CRANE
1/2"=1'-0"

This Record Drawing is a combination of the sealed engineering contract drawings for this project, modified by information furnished by the contractor reflecting changes in the Project made during construction. The original sealed drawings are on file at the offices of
FREESE AND NICHOLS, INC.
RECORD DRAWINGS PREPARED ON:
06/24/20

Freese and Nichols, Inc.
Texas Registered Engineering Firm F-2144

THE SEAL THAT ORIGINALLY APPEARED ON THIS DOCUMENT WAS AUTHORIZED BY CORY C. GEE P.E. TEXAS NO. 118865 ON 06/10/2016. ALTERATION OF A SEALED DOCUMENT WITHOUT PROPER NOTIFICATION OF THE RESPONSIBLE ENGINEER IS AN OFFENSE UNDER THE TEXAS ENGINEERING PRACTICE ACT.

FREESE AND NICHOLS
4040 Broadway Street, Suite 600
San Antonio, Texas 78209-6350
Phone - (210) 298-3800
Fax - (210) 298-3801
Web - www.freese.com

CITY OF CASTROVILLE
WWTP CAPACITY EXPANSION PROJECT
MECHANICAL
ACTIVATED SLUDGE (CARROUSEL BASIN)
MISC. PLANS AND SECTIONS

NO.	ISSUE	BY	DATE
3	RECORD DRAWINGS	CCG	06/24/20
2	FIELD ORDER NO. 1	CCG	02/22/17
1	ISSUED FOR CONSTRUCTION	CCG	11/16/16

F&N JOB NO. CVL14259
DATE 6/10/16
DESIGNED CCG
DRAWN DDH
REVISED
CHECKED TWS
FILE NAME WW-BNR-PS-MECH02.dwg

VERIFY SCALE 0 1 Bar is one inch on original drawing. If not one inch on this sheet, adjust scale.

SHEET AS-M3
SEQ.

ACAD Rel: 21.0s (LMS Tech)
Filename: N:\WW\Drawings\WW-BNR-PS-MECH02.dwg
Last Saved: 10/9/2019 12:31 PM Saved By: 03576

Plot Date: 6/18/2020 5:09 PM Plot By: 90119 Filename: N:\WW\Drawings\WW-BNR-PS-MECH02.dwg

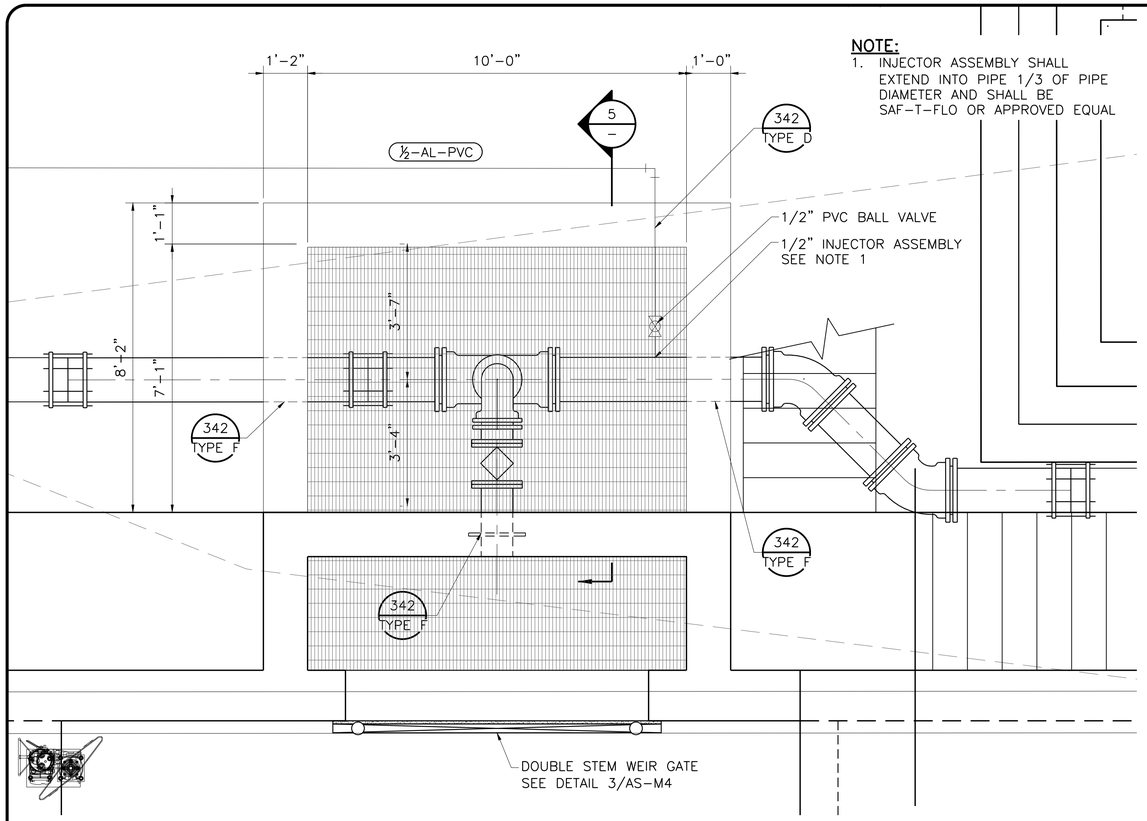

NOTE:
1. INJECTOR ASSEMBLY SHALL EXTEND INTO PIPE 1/3 OF PIPE DIAMETER AND SHALL BE SAF-T-FLO OR APPROVED EQUAL

NORTH 1 AS-M4

CAROUSEL BASIN NO. 2
EFFLUENT BOX PLAN
1/2"=1'-0"

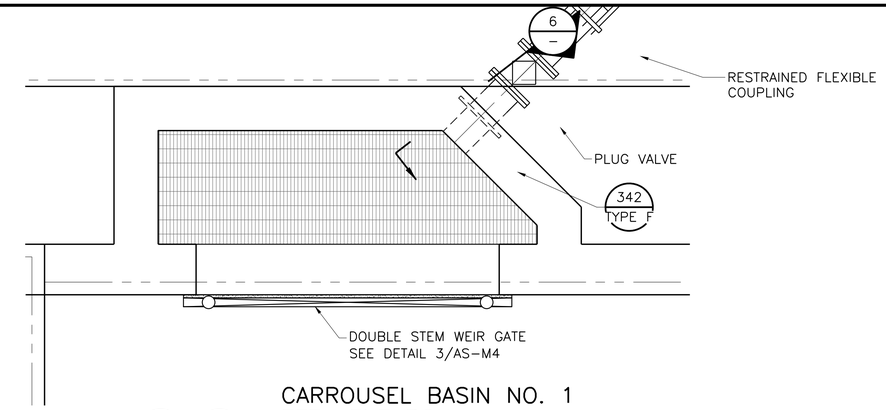

NORTH 2 AS-M4

CARROUSEL BASIN NO. 1
EFFLUENT BOX
1/2"=1'-0"

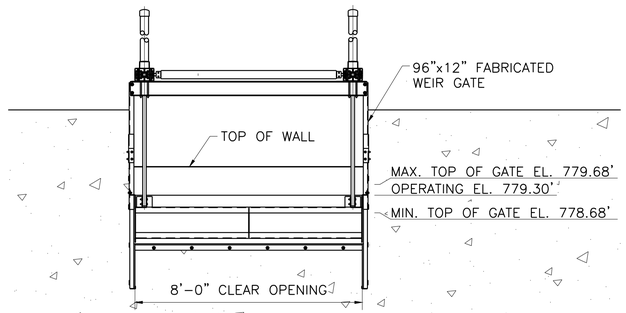

NOTE:
1. WEIR GATE SHALL BE AS SPECIFIED IN SECTION 40 05 50 "FABRICATED GATES"

3 AS-M4

WEIR GATE DETAIL
3/8"=1'-0"

This Record Drawing is a combination of the sealed engineering contract drawings for this project, modified by information furnished by the contractor reflecting changes in the Project made during construction. The original sealed drawings are on file at the offices of
FREESE AND NICHOLS, INC.
RECORD DRAWINGS PREPARED ON: 06/24/20

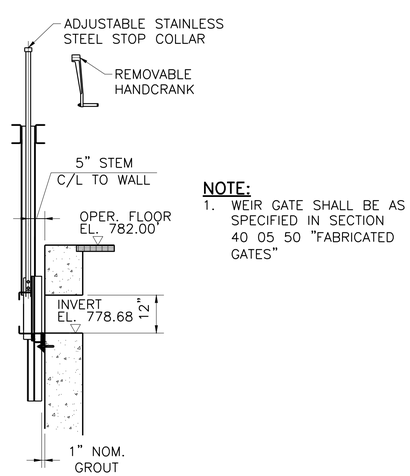

NOTE:
1. WEIR GATE SHALL BE AS SPECIFIED IN SECTION 40 05 50 "FABRICATED GATES"

4 AS-M4

WEIR GATE SECTION
1/2"=1'-0"

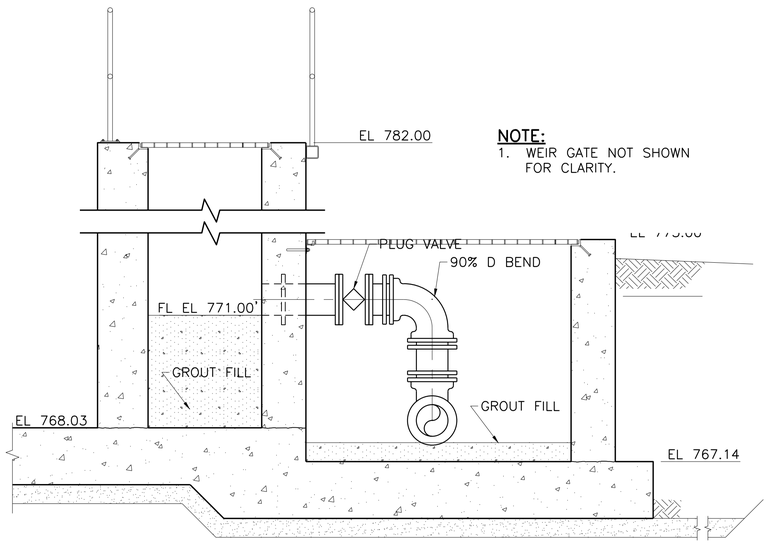

NOTE:
1. WEIR GATE NOT SHOWN FOR CLARITY.

5 AS-M4

CAROUSEL BASIN NO. 2
EFFLUENT BOX SECTION
1/2"=1'-0"

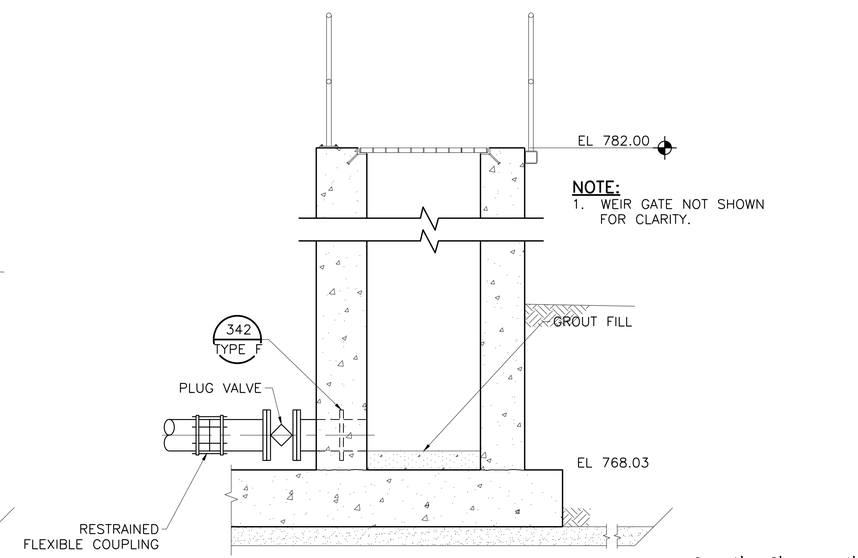

NOTE:
1. WEIR GATE NOT SHOWN FOR CLARITY.

0 1' 2' 4'
1/2"=1'-0"

6 AS-M4

CAROUSEL BASIN NO. 1
EFFLUENT BOX SECTION
1/2"=1'-0"

Freese and Nichols, Inc.
Texas Registered Engineering Firm F-2144

THE SEAL THAT ORIGINALLY APPEARED ON THIS DOCUMENT WAS AUTHORIZED BY COBY C. GEE P.E. TEXAS NO. 118865 ON 08/10/2016. ALTERATION OF A SEALED DOCUMENT WITHOUT PROPER NOTIFICATION OF THE RESPONSIBLE ENGINEER IS AN OFFENSE UNDER THE TEXAS ENGINEERING PRACTICE ACT.

FREESE AND NICHOLS
4040 Broadway Street, Suite 600
San Antonio, Texas 78209-6350
Phone - (210) 298-3800
Fax - (210) 298-3801
Web - www.freese.com

CITY OF CASTROVILLE
WWTP CAPACITY EXPANSION PROJECT
MECHANICAL
ACTIVATED SLUDGE (CARROUSEL BASIN)
SECTIONS AND DETAILS

NO.	ISSUE	BY	DATE
2	RECORD DRAWINGS	CCG	06/24/20
1	ISSUED FOR CONSTRUCTION	CCG	11/16/16

F&N JOB NO. CVL14259
DATE 6/10/16
DESIGNED CCG
DRAWN DDH
REVISED
CHECKED TWS
FILE NAME WW-AS-PS-MECH04.dwg

VERIFY SCALE 0 1
Bar is one inch on original drawing. If not one inch on this sheet, adjust scale.

SHEET AS-M4
SEQ.

ACAD Rel: 21.0s (LMS Tech)
Filename: N:\WW\Drawings\WW-AS-PS-MECH04.dwg
Last Saved: 10/9/2019 12:31 PM Saved By: 03576

Plot Date: 6/18/2020 5:14 PM Plot By: 90119 Filename: N:\WW\Drawings\WW-AS-PS-MECH04.dwg

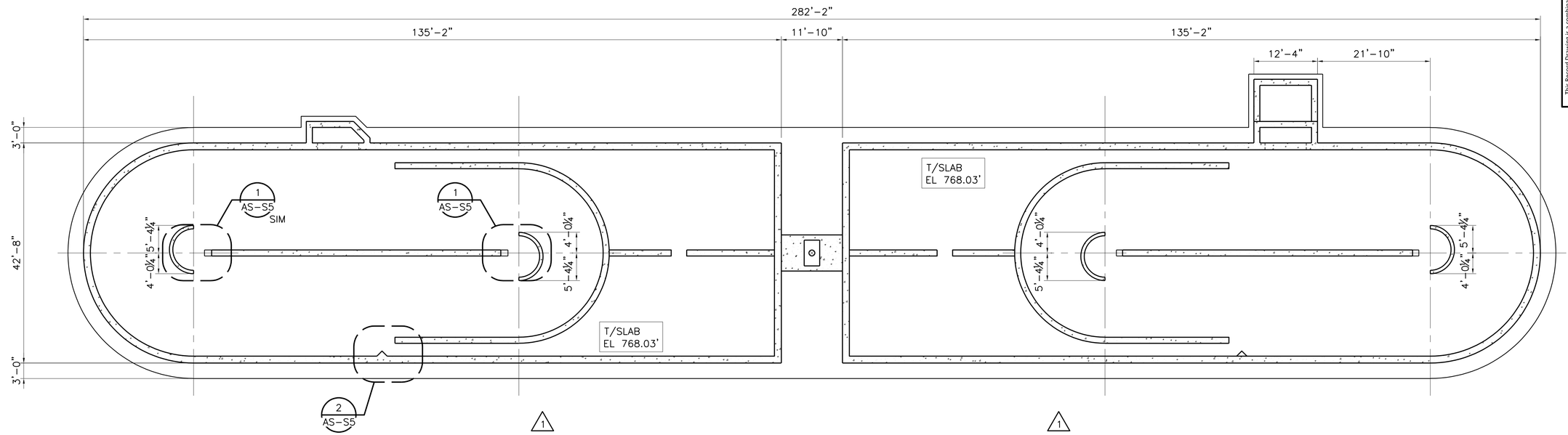

NORTH 1 SECTIONAL PLAN
3/32"=1'-0"

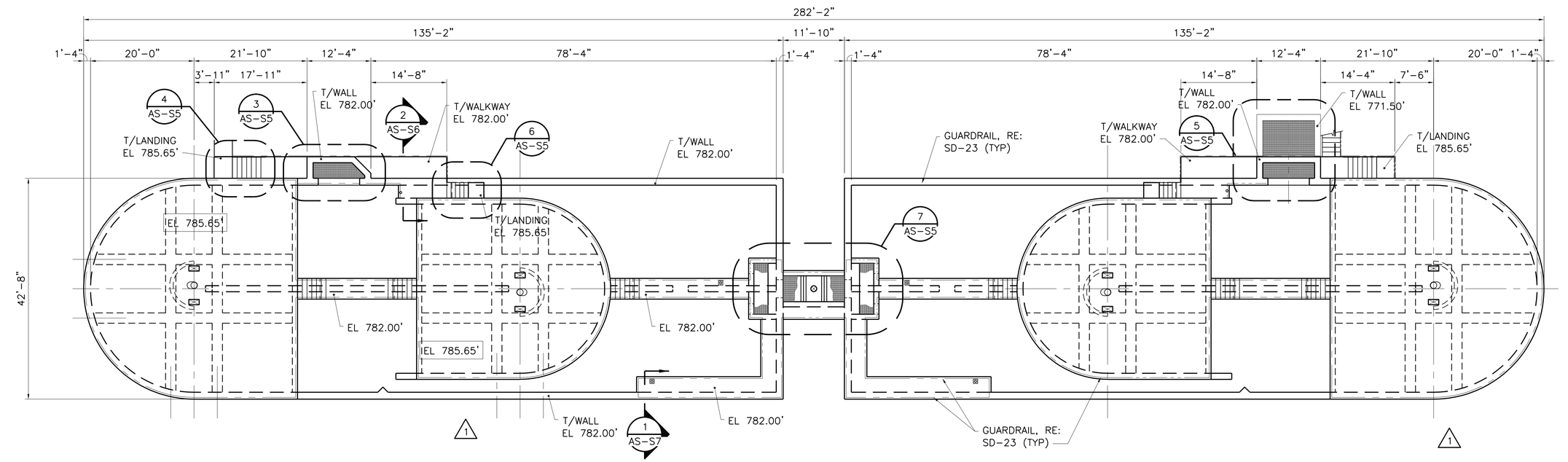

NORTH 2 TOP PLAN
3/32"=1'-0"

0 4' 8' 16'
3/32"=1'-0"

This Record Drawing is a combination of the sealed engineering contract drawings for this project, modified by information furnished by the contractor reflecting changes in the Project made during construction. The original sealed drawings are on file at the offices of
FREESE AND NICHOLS, INC.
RECORD DRAWINGS PREPARED ON:
6/24/2020

Freese and Nichols, Inc.
Texas Registered Engineering Firm F-2144

THE SEAL APPEARING ON THIS DOCUMENT WAS AUTHORIZED BY: MICHAEL RAY ROBERTSON P.E.
TEXAS NO. 92201 ON: 7/28/2016
ALTERATION OF A SEALED DOCUMENT WITHOUT PROPER NOTIFICATION OF THE RESPONSIBLE ENGINEER IS AN OFFENSE UNDER THE TEXAS ENGINEERING PRACTICE ACT.

FREESE AND NICHOLS
4040 Broadway Street, Suite 600
San Antonio, Texas 78209-6350
Phone - (210) 298-3800
Fax - (210) 298-3801
Web - www.freese.com

CITY OF CASTROVILLE
WWTP CAPACITY EXPANSION PROJECT
STRUCTURAL
ACTIVATED SLUDGE (CARROUSEL BASIN)
SECTIONAL AND TOP PLANS

NO.	ISSUE	BY	DATE
3	RECORD DRAWING	MRR	06/24/20
2	ISSUED FOR CONSTRUCTION	MRR	11/16/16
1	ADDENDUM NO. 6	MRR	7/28/16

F&N JOB NO. CVL14259
DATE 6/10/16
DESIGNED MRR
DRAWN JAW
REVISED
CHECKED AD
FILE NAME ST-BNR-PL-FNDN01.dwg

VERIFY SCALE 0 1
Bar is one inch on original drawing. If not one inch on this sheet, adjust scale.

SHEET AS-S1
SEQ.

ACAD Rel: 21.0s (LMS Tech)
Filename: N:\ST\ST-BNR-PL-FNDN01.dwg
Last Saved: 6/17/2020 10:49 AM Saved By: 02198

Plot Date: 6/18/2020 11:13 AM Plot By: 02198 Filename: N:\ST\ST-BNR-PL-FNDN01.dwg

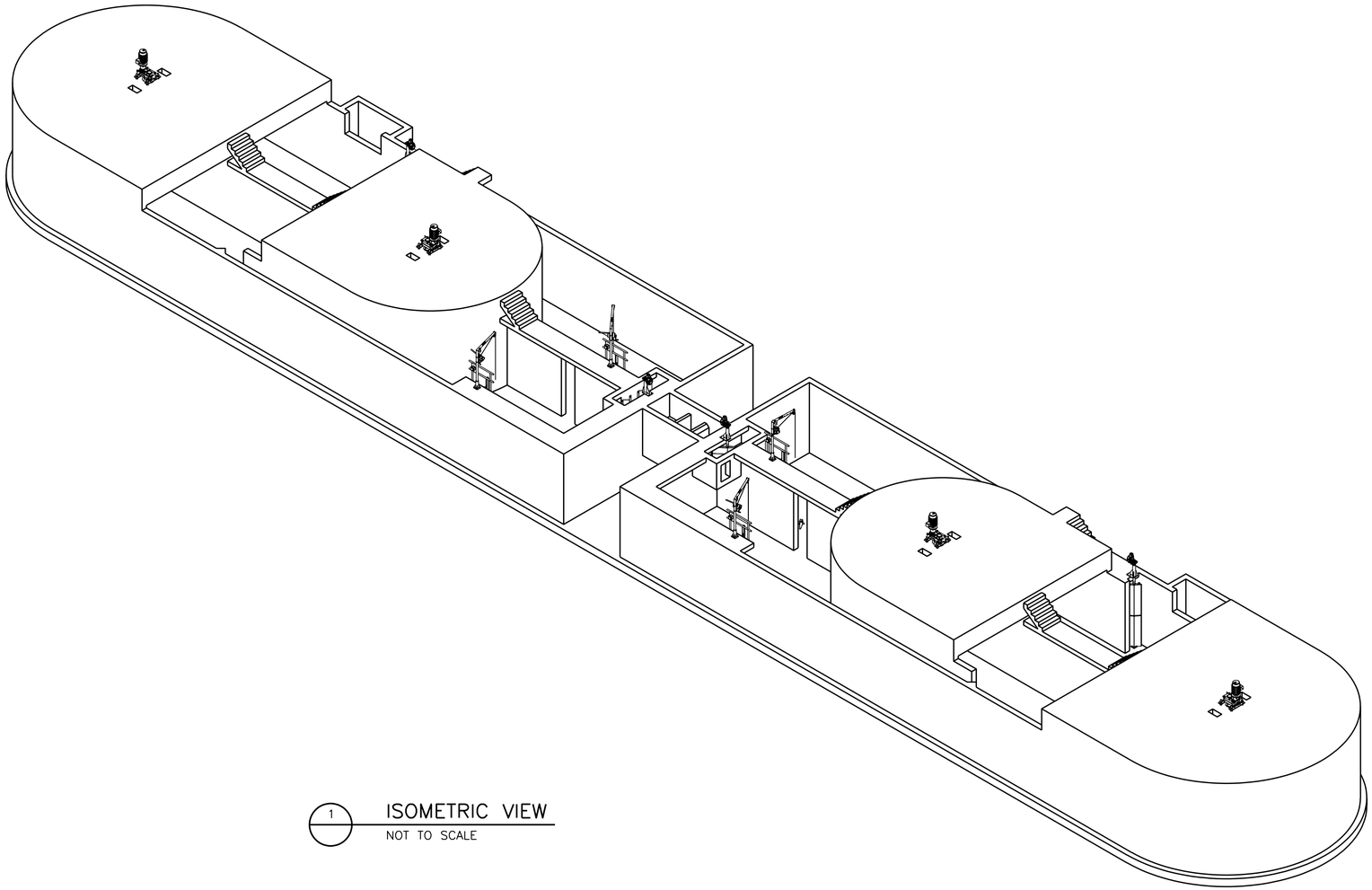

1 ISOMETRIC VIEW
NOT TO SCALE

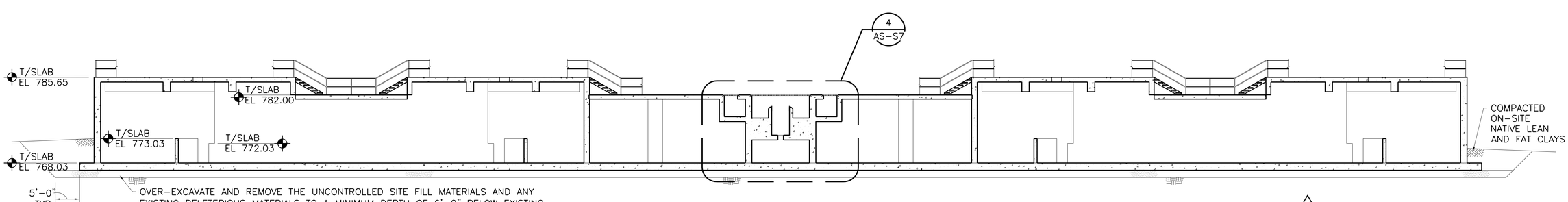

OVER-EXCAVATE AND REMOVE THE UNCONTROLLED SITE FILL MATERIALS AND ANY EXISTING DELETERIOUS MATERIALS TO A MINIMUM DEPTH OF 6'-0" BELOW EXISTING GRADE. REPLACE W/COMPACTED CRUSHED LIMESTONE BASE MATERIAL. MINIMUM DEPTH OF COMPACTED CRUSHED LIMESTONE BASE MATERIAL SHALL BE 6".

2 SECTION
AS-S1 3/32"=1'-0"

0 4' 8' 16'
3/32"=1'-0"

This Record Drawing is a combination of the sealed engineering contract drawings for this project, modified by information furnished by the contractor reflecting changes in the Project made during construction. The original sealed drawings are on file at the offices of
FREESE AND NICHOLS, INC.
RECORD DRAWINGS PREPARED ON:
6/24/2020

Freese and Nichols, Inc.
Texas Registered Engineering Firm F-2144

THE SEAL APPEARING ON THIS DOCUMENT WAS AUTHORIZED BY: MICHAEL RAY ROBERTSON, P.E. TEXAS NO. 92201 ON: 7/26/2016. ALTERATION OF A SEALED DOCUMENT WITHOUT PROPER NOTIFICATION OF THE RESPONSIBLE ENGINEER IS AN OFFENSE UNDER THE TEXAS ENGINEERING PRACTICE ACT.

FREESE AND NICHOLS
4040 Broadway Street, Suite 600
San Antonio, Texas 78209-6350
Phone - (210) 298-3800
Fax - (210) 298-3801
Web - www.freese.com

CITY OF CASTROVILLE
WWTP CAPACITY EXPANSION PROJECT
STRUCTURAL
ACTIVATED SLUDGE (CARROUSEL BASIN)
ISOMETRIC AND SECTION

NO.	ISSUE	BY	DATE
3	RECORD DRAWING	MRR	06/24/20
2	ISSUED FOR CONSTRUCTION	MRR	11/16/16
1	ADDENDUM NO. 6	MRR	7/28/16

F&N JOB NO. CVL14259
DATE 6/10/16
DESIGNED MRR
DRAWN JAW
REVISED
CHECKED AD
FILE NAME ST-BNR-SC-BLDG01.dwg

VERIFY SCALE 0 1
Bar is one inch on original drawing. If not one inch on this sheet, adjust scale.

SHEET AS-S2
SEQ.

ACAD Rel: 21.0s (LMS Tech)
Filename: N:\ST\ST-BNR-SC-BLDG01.dwg
Last Saved: 6/17/2020 10:51 AM Saved By: 02198

Plot Date: 6/18/2020 11:14 AM Plot By: 02198 Filename: N:\ST\ST-BNR-SC-BLDG01.dwg

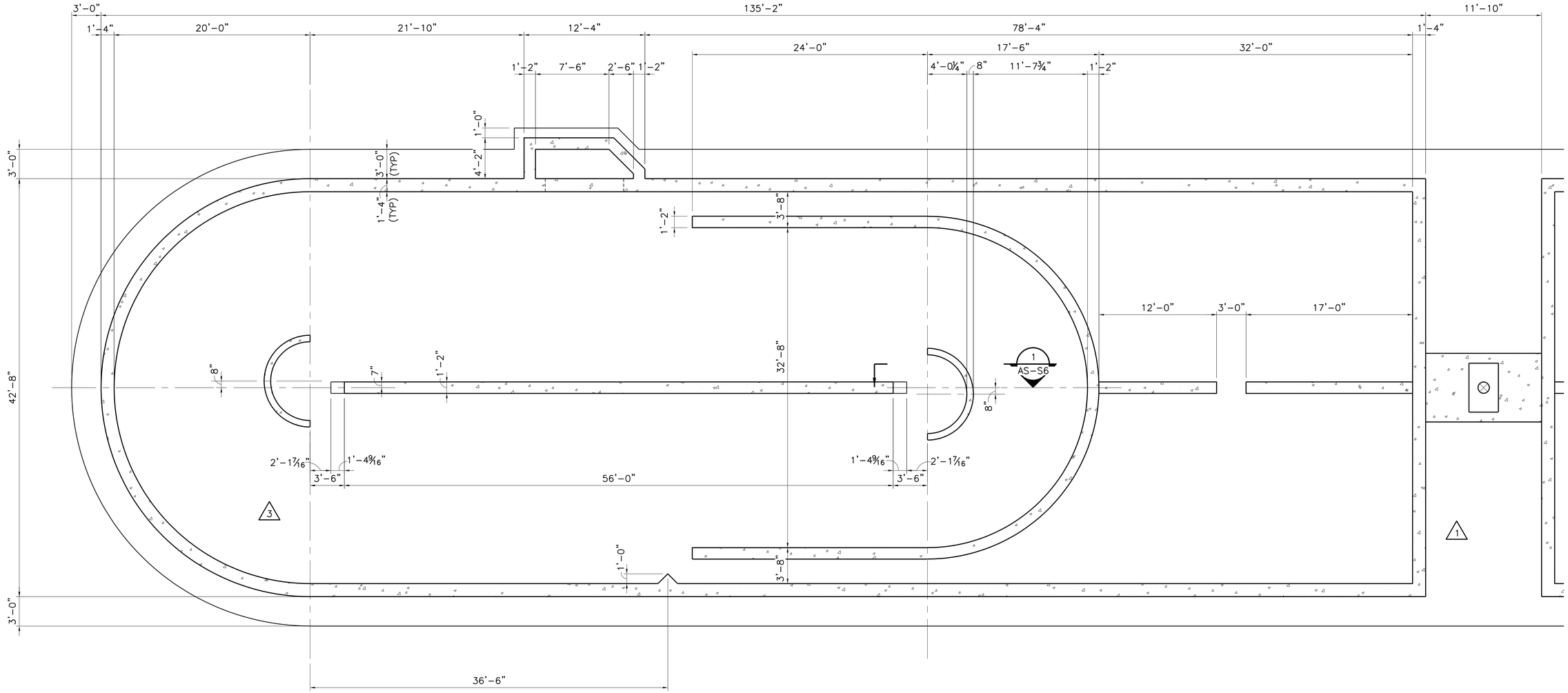

1 ENLARGED SECTIONAL PLAN
3/16"=1'-0"

0 4' 8'
3/16"=1'-0"

This Record Drawing is a combination of the sealed engineering contract drawings for this project, modified by information furnished by the contractor reflecting changes in the Project made during construction. The original sealed drawings are on file at the offices of
FREESE AND NICHOLS, INC.
RECORD DRAWINGS PREPARED ON:
6/24/2020

Freese and Nichols, Inc.
Texas Registered Engineering Firm F-2144

THE SEAL APPEARING ON THIS DOCUMENT WAS AUTHORIZED BY ANDREW DOUGLAS DEL ANGEL, P.E. TEXAS NO. 122121 DATE: 6/24/2020
IT IS A VIOLATION OF THE ENGINEERING PRACTICE ACT FOR ANY PERSON, UNLESS ACTING UNDER THE DIRECTION OF A LICENSED ENGINEER, TO ALTER THIS DOCUMENT IN ANY WAY. IT IS A VIOLATION OF THE RESPONSIBILITY RULES FOR THE ENGINEER TO AFFIX HIS SEAL TO ANY DOCUMENT THAT HAS BEEN ALTERED IN ANY MANNER. IT IS A VIOLATION FOR ANY PERSON TO PRACTICE ENGINEERING UNDER THE TEXAS ENGINEERING PRACTICE ACT.

FREESE NICHOLS

4040 Broadway Street, Suite 600
San Antonio, Texas 78209-6350
Phone: (210) 298-8000
Fax: (210) 298-9801
Web - www.freese.com

CITY OF CASTROVILLE

WWTP CAPACITY EXPANSION PROJECT

STRUCTURAL

ACTIVATED SLUDGE (CARROUSEL BASIN) ENLARGED BASIN SECTIONAL PLAN

NO.	ISSUE	BY	DATE
1	RECORD DRAWING	MRR	06/24/20
2	FIELD ORDER NO. 1	MRR	02/22/17
1	ISSUED FOR CONSTRUCTION	MRR	11/16/16
1	ADDENDUM NO. 6	MRR	7/28/16

VERIFY SCALE Bar is one inch on original drawing. If not one inch on this sheet, adjust scale.
0 1"

FAN JOB NO. CVL14259

DATE	6/10/16
DESIGNED	MRR
DRAWN	JAW
CHECKED	AD
FILE NAME	ST-BNR-PL-FNDN02.dwg

SHEET
AS-S3

SEQ.

ACAD Rel: 21.0s (LMS Tech)
Filename: N:\ST\ST-BNR-PL-FNDN02.dwg
Last Saved: 6/17/2020 10:55 AM Saved By: 02198

Plot Date: 6/18/2020 11:14 AM Plot By: 02198 Filename: N:\ST\ST-BNR-PL-FNDN02.dwg

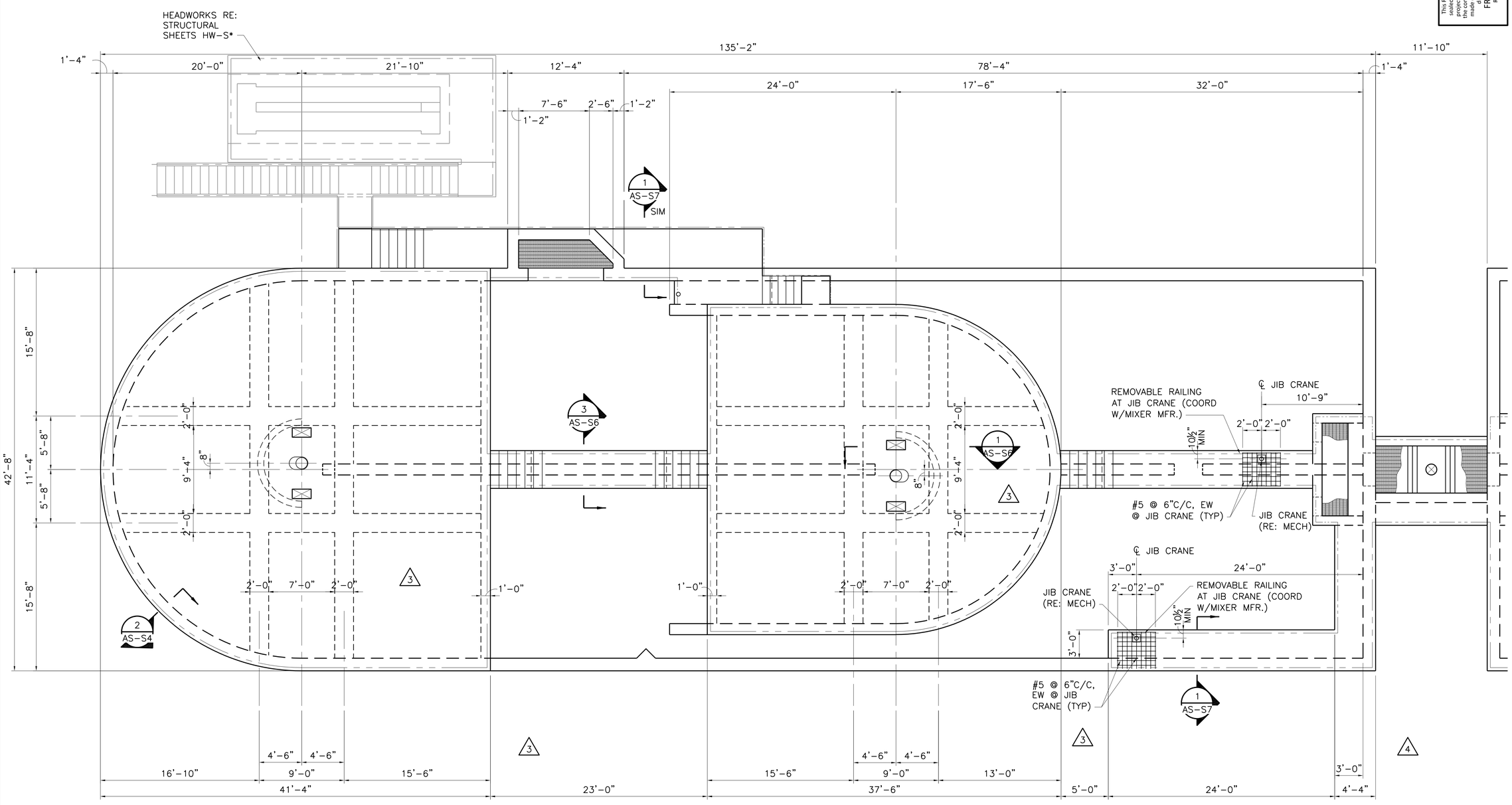

1 ENLARGED TOP PLAN
3/16"=1'-0"

0 4' 8'
3/16"=1'-0"

This Record Drawing is a combination of the sealed engineering contract drawings for this project, modified by information furnished by the contractor reflecting changes in the Project made during construction. The original sealed drawings are on file at the offices of
FREESE AND NICHOLS, INC.
RECORD DRAWINGS PREPARED ON:
6/24/2020

Freese and Nichols, Inc.
Texas Registered Engineering Firm F-2144

THE SEAL APPEARING ON THIS DOCUMENT WAS AUTHORIZED BY BRANDON M. RAY, P.E.
TEXAS NO. 122021 DATE: 6/17/2020
IT IS A VIOLATION OF THE ENGINEERING PRACTICE ACT FOR ANY PERSON TO ALTER THIS DOCUMENT IN ANY WAY WITHOUT THE EXPRESS AND APPROPRIATE PERMISSION AND AUTHORIZATION OF THE RESPONSIBLE ENGINEER NAMED HEREON AND ANY ALTERATION MUST BE REPORTED TO THE TEXAS BOARD OF PROFESSIONAL ENGINEERS AS REQUIRED BY THE TEXAS ENGINEERING PRACTICE ACT.

FREESE AND NICHOLS
4040 Broadway Street, Suite 600
San Antonio, Texas 78209-6350
Phone - (210) 829-3800
Fax - (210) 298-1801
Web - www.freese.com

CITY OF CASTROVILLE

WWTP CAPACITY EXPANSION PROJECT

STRUCTURAL

ACTIVATED SLUDGE (CARROUSEL BASIN) ENLARGED TOP PLAN

NO.	ISSUE	BY	DATE
	RECORD DRAWING	MRR	06/24/20
3	RFI NO. 13	MRR	03/01/17
2	FIELD ORDER NO. 1	MRR	02/22/17
1	ISSUED FOR CONSTRUCTION	MRR	11/16/16
1	ADDENDUM NO. 6	MRR	7/28/16

FAM JOB NO. CVL14259
DATE 6/10/16
DESIGNED MRR
DRAWN JAW
REVISED
CHECKED AD
FILE NAME ST-BNR-PL-FNDN03.dwg

VERIFY SCALE Bar is one inch on original drawing. If not one inch on this sheet, adjust scale.
0 1"

SHEET AS-S4
SEQ.

ACAD Rel: 21.0s (LMS Tech)
Filename: N:\ST\ST-BNR-PL-FNDN03.dwg
Last Saved: 6/17/2020 10:59 AM Saved By: 02198

Plot Date: 6/18/2020 11:14 AM Plot By: 02198 Filename: N:\ST\ST-BNR-PL-FNDN03.dwg

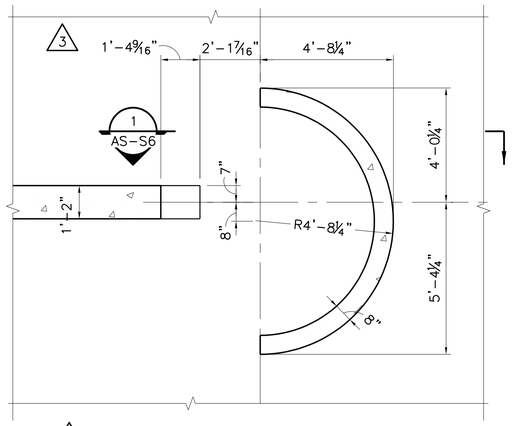

1 / 1 — 1 AS-S1 — PLAN DETAIL
3/8"=1'-0"

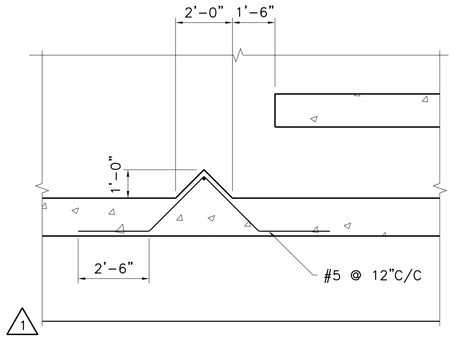

1 — 2 AS-S1 — PLAN DETAIL
3/8"=1'-0"

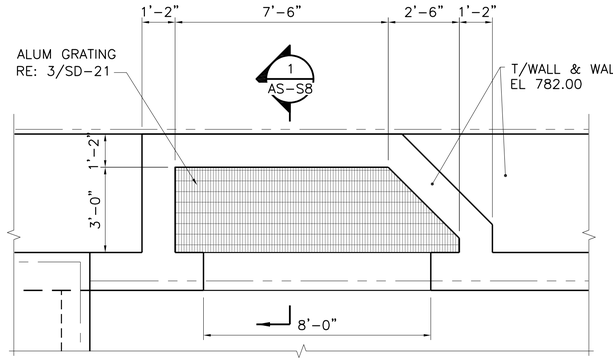

3 AS-S1 — BASIN NO. 1 EFFLUENT BOX PLAN
3/8"=1'-0"

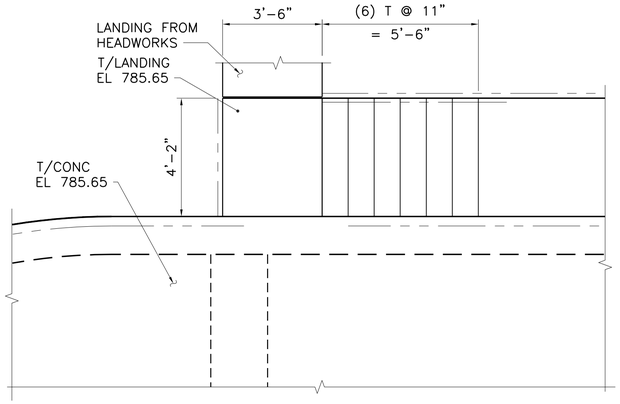

1 — 4 AS-S1 — PLAN DETAIL
3/8"=1'-0"

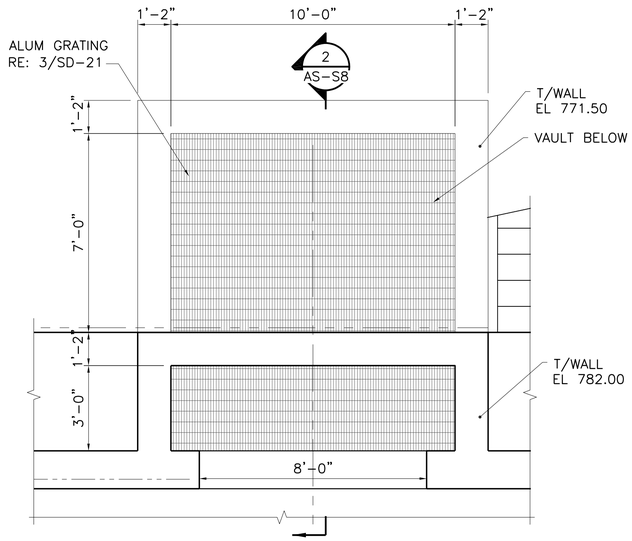

5 AS-S1 — BASIN NO. 2 EFFLUENT BOX PLAN
3/8"=1'-0"

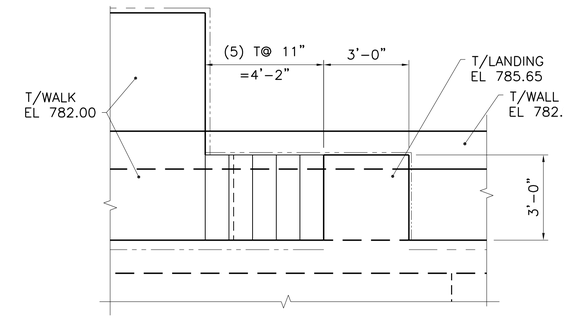

6 AS-S1 — PLAN DETAIL
3/8"=1'-0"

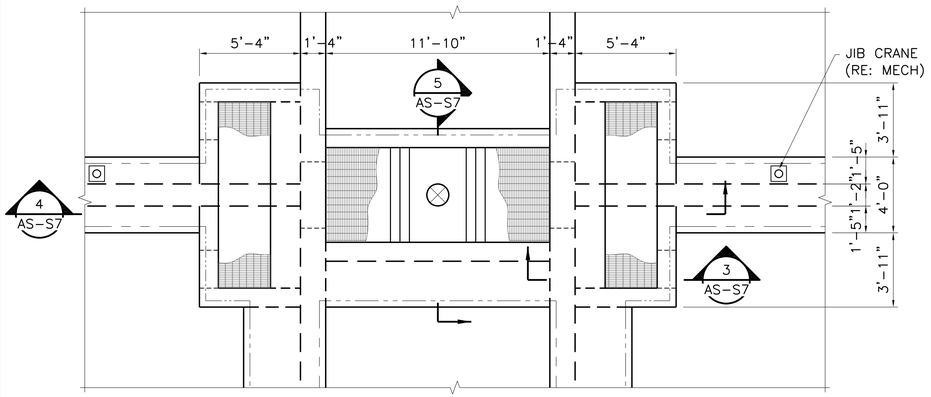

7 AS-S1 — INFLUENT SPLITTER BOX PLAN
1/4"=1'-0"

0 1' 2' 4'
3/8"=1'-0

0 1' 2' 4' 8'
1/4"=1'-0"

This Record Drawing is a combination of the sealed engineering contract drawings for this project, modified by information furnished by the contractor reflecting changes in the Project made during construction. The original sealed drawings are on file at the offices of
FREESE AND NICHOLS, INC.
RECORD DRAWINGS PREPARED ON:
6/24/2020

THE SEAL APPEARING ON THIS DOCUMENT WAS AUTHORIZED BY JAMES W. LEE, P.E. TEXAS NO. 92201 DATE: 6/22/2020
IT IS A VIOLATION OF THE ENGINEERING PRACTICE ACT FOR ANY PERSON TO ALTER THIS DOCUMENT IN ANY MANNER WITHOUT THE AUTHORIZATION OF THE RESPONSIBLE ENGINEER NAMED HEREON. ANY ALTERATION MUST BE PERFORMED BY A REGISTERED ENGINEER UNDER THE TEXAS ENGINEERING PRACTICE ACT.

Freese and Nichols, Inc.
Texas Registered Engineering Firm F-2144

FREESE NICHOLS
4040 Broadway Street, Suite 600
San Antonio, Texas 78209-6350
Phone - (210) 829-3800
Fax - (210) 298-3801
Web - www.freese.com

CITY OF CASTROVILLE
WWTP CAPACITY EXPANSION PROJECT
STRUCTURAL
ACTIVATED SLUDGE (CARROUSEL BASIN) PLAN DETAILS

F&N JOB NO. CVL14259

NO.	ISSUE	BY	DATE
4	RECORD DRAWING	MRR	06/24/20
3	FIELD ORDER NO. 1	MRR	02/22/17
2	ISSUED FOR CONSTRUCTION	MRR	11/16/16
1	ADDENDUM NO. 6	MRR	7/28/16

DATE 6/10/16
DESIGNED MRR
DRAWN JAW/JLM
REVISED
CHECKED AD
FILE NAME ST-BNR-DT-FNDN01.dwg

VERIFY SCALE Bar is one inch on original drawing. If not one inch on this sheet, adjust scale.
0 1"

SHEET AS-S5
SEQ.

ACAD Rel: 21.0s (LMS Tech)
Filename: N:\ST\ST-BNR-DT-FNDN01.dwg
Last Saved: 6/17/2020 11:01 AM Saved By: 02198

Plot Date: 6/18/2020 11:15 AM Plot By: 02198 Filename: N:\ST\ST-BNR-DT-FNDN01.dwg

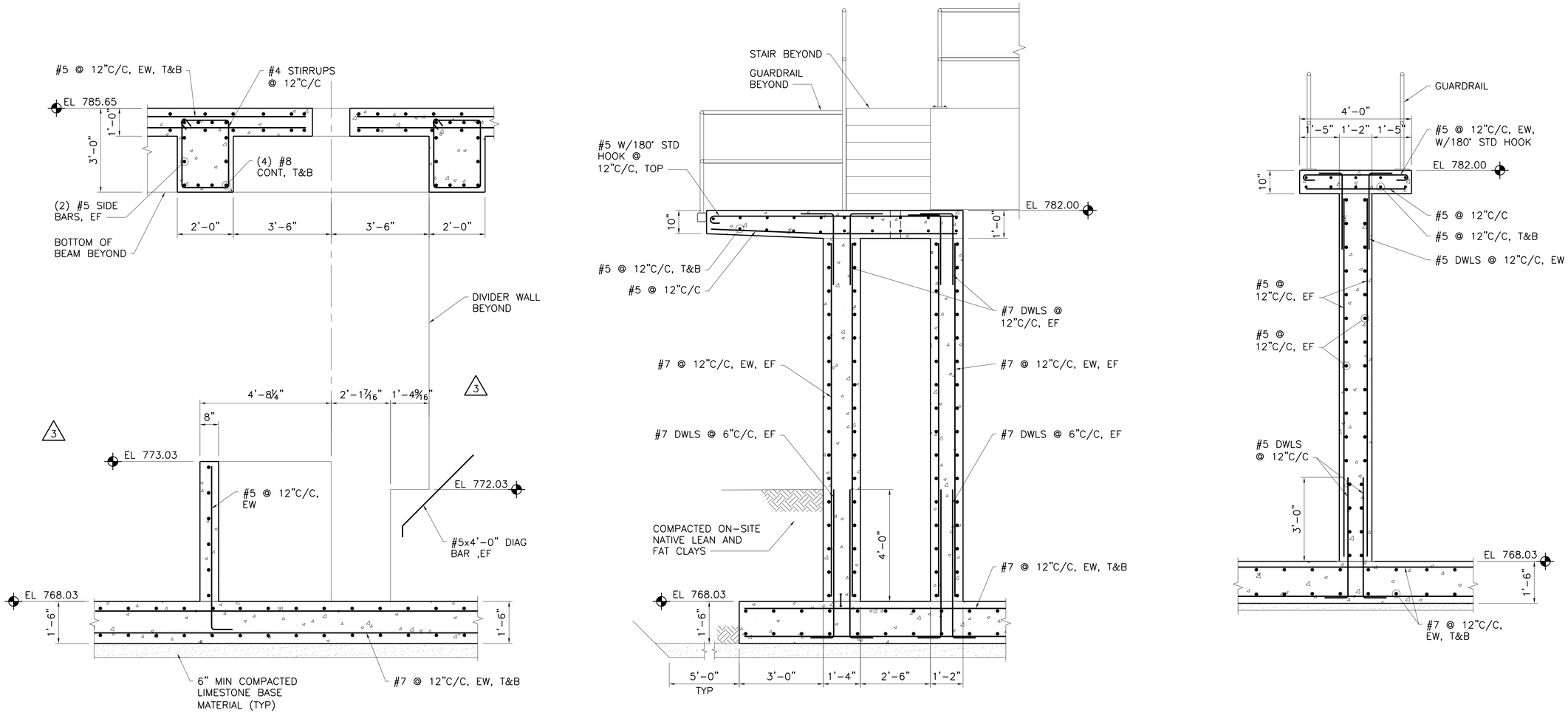

1 AS-S3 SECTION 1/2"=1'-0"

2 AS-S1 SECTION 1/2"=1'-0"

3 AS-S4 SECTION 1/2"=1'-0"

0 1' 2' 4'
1/2"=1'-0"

This Record Drawing is a combination of the sealed engineering contract drawings for this project, modified by information furnished by the contractor reflecting changes in the Project made during construction. The original sealed drawings are on file at the offices of FREESE AND NICHOLS, INC.
RECORD DRAWINGS PREPARED ON: 6/24/2020

Freese and Nichols, Inc.
Texas Registered Engineering Firm F-2144

THE SEAL APPEARING ON THIS DOCUMENT WAS AUTHORIZED BY MICHAEL RAY BOSTON P.E. TEXAS NO. 50201 ON: 2/22/2017
ALTERATION OF A SEALED DOCUMENT WITHOUT PROPER NOTIFICATION OF THE RESPONSIBLE ENGINEER IS AN OFFENSE UNDER THE TEXAS ENGINEERING PRACTICE ACT.

FREESE AND NICHOLS
4040 Broadway Street, Suite 600
San Antonio, Texas 78209-6350
Phone - (210) 298-3800
Fax - (210) 298-3801
Web - www.freese.com

CITY OF CASTROVILLE
WWTP CAPACITY EXPANSION PROJECT
STRUCTURAL
ACTIVATED SLUDGE (CARROUSEL BASIN) SECTIONS

NO.	ISSUE	BY	DATE
4	RECORD DRAWING	MRR	06/24/20
3	FIELD ORDER NO. 1	MRR	02/22/17
2	ISSUED FOR CONSTRUCTION	MRR	11/16/16
1	ADDENDUM NO. 6	MRR	7/28/16

F&N JOB NO. CVL14259
DATE 6/10/16
DESIGNED MRR
DRAWN JAW/JLM
REVISED
CHECKED AD
FILE NAME ST-BNR-SC-CONC01.dwg

VERIFY SCALE Bar is one inch on original drawing. If not one inch on this sheet, adjust scale.

SHEET AS-S6
SEQ.

ACAD Rel: 21.0s (LMS Tech)
Filename: N:\ST\ST-BNR-SC-CONC01.dwg
Last Saved: 6/17/2020 11:03 AM Saved By: 02198

Plot Date: 6/18/2020 11:15 AM Plot By: 02198 Filename: N:\ST\ST-BNR-SC-CONC01.dwg

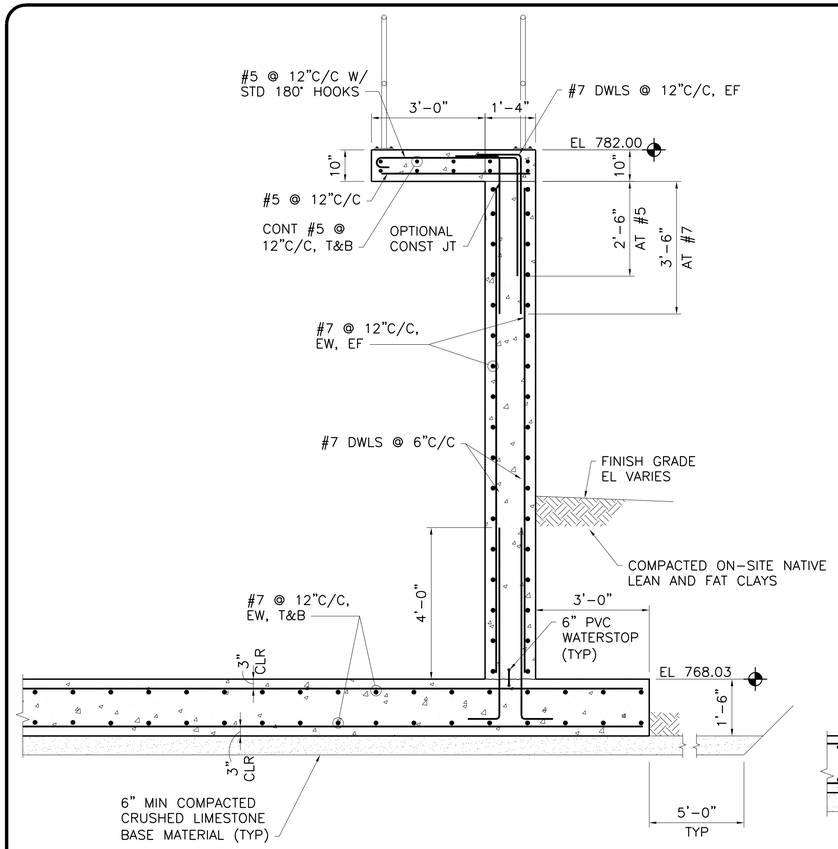

1 AS-S1 SECTION 1/2"=1'-0"

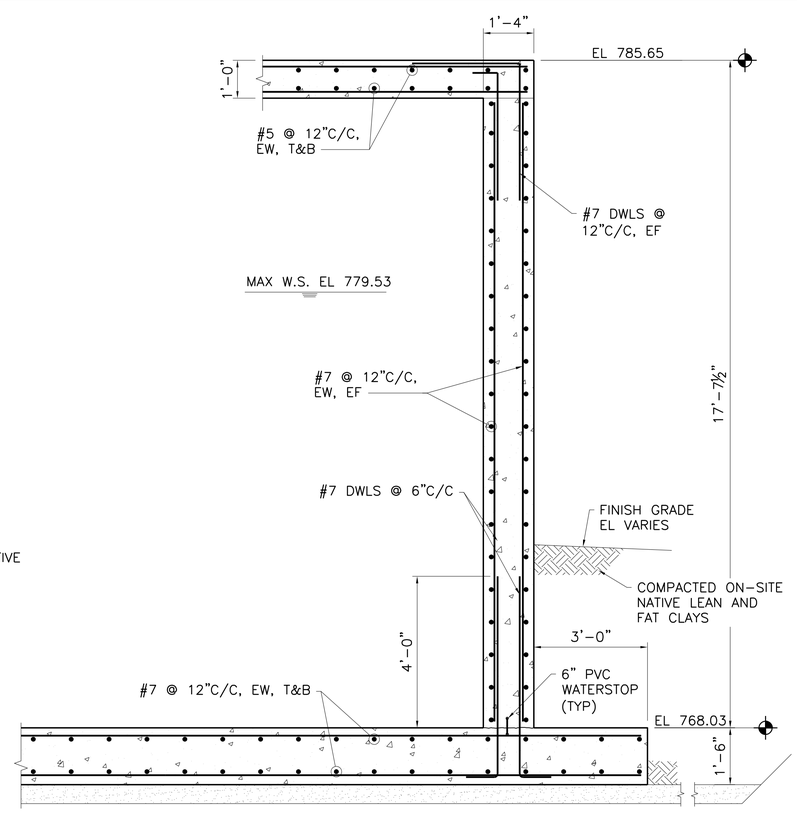

2 AS-S4 SECTION 1/2"=1'-0"

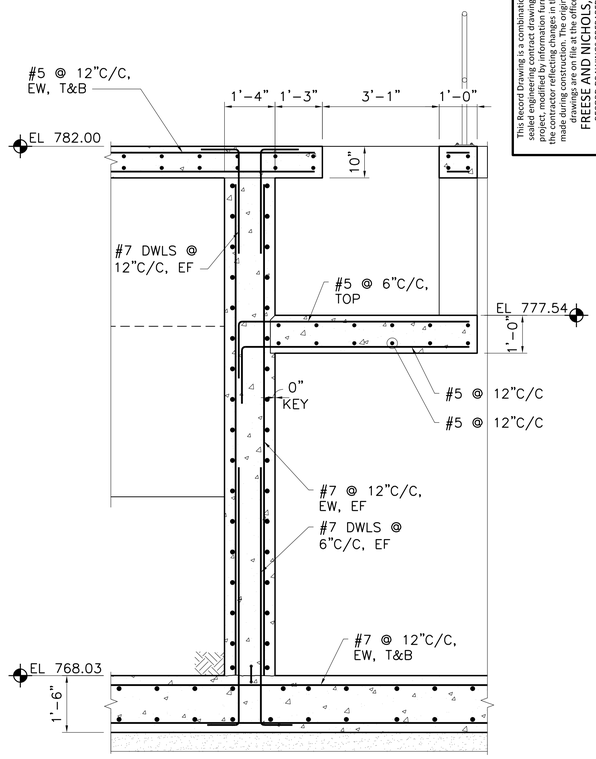

3 AS-S5 SECTION 1/2"=1'-0"

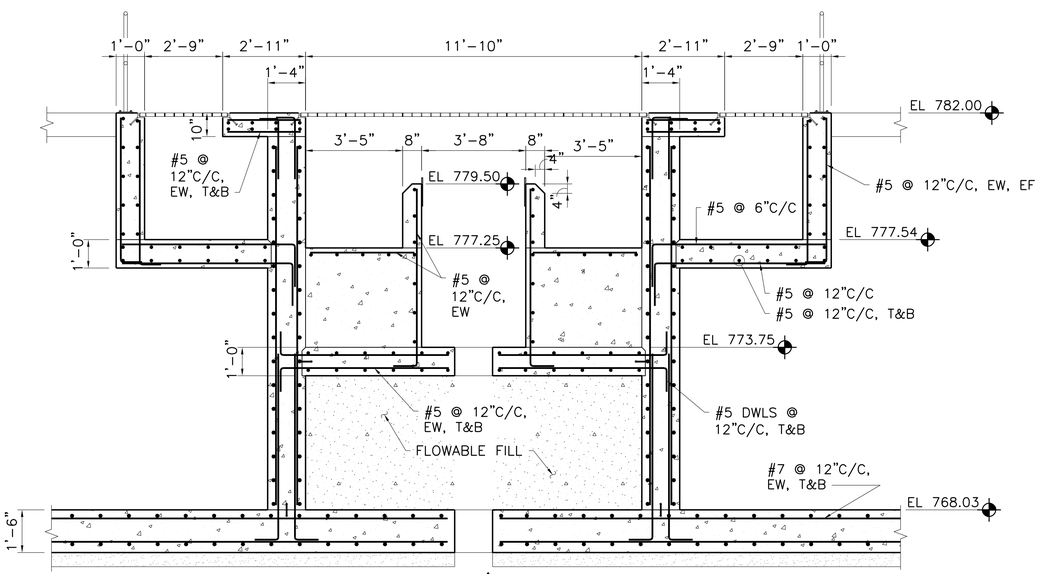

4 AS-S5 SECTION 3/8"=1'-0"

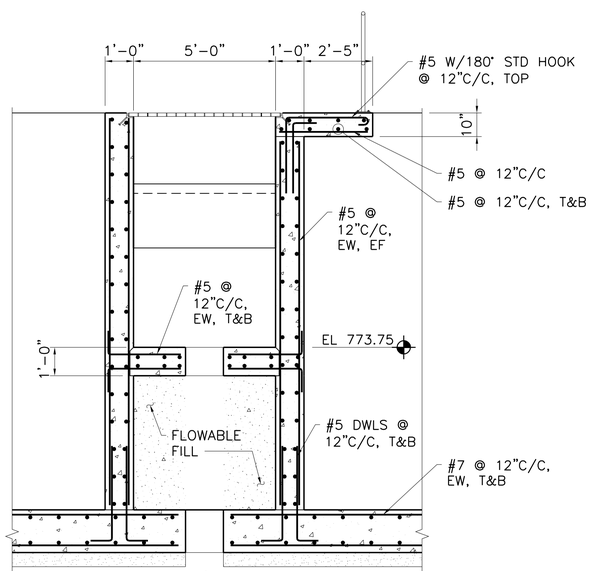

1

5 AS-S5 SECTION 3/8"=1'-0"

0 1' 2' 4'
1/2"=1'-0"

0 1' 2' 4'
3/8"=1'-0

This Record Drawing is a combination of the sealed engineering contract drawings for this project, modified by information furnished by the contractor reflecting changes in the Project made during construction. The original sealed drawings are on file at the offices of
FREESE AND NICHOLS, INC.
RECORD DRAWINGS PREPARED ON:
6/24/2020

THE SEAL APPEARING ON THIS DOCUMENT WAS AUTHORIZED BY JEFFREY A. LEE, P.E. 6/17/2020
TEXAS NO. 92201
RELEASED FOR REVIEW PURPOSES ONLY. IT IS NOT TO BE USED FOR BIDDING, PERMIT, OR CONSTRUCTION PURPOSES. THE ENGINEER IDENTIFIED HEREON IS NOT RESPONSIBLE FOR ANY CHANGES MADE TO THIS DOCUMENT BY OTHERS.

Freese and Nichols, Inc.
Texas Registered Engineering Firm F-2144

FREESE NICHOLS
4040 Broadway Street, Suite 600
San Antonio, Texas 78209-6350
Phone: (210) 298-3800
Fax: (210) 298-3801
Web - www.freese.com

CITY OF CASTROVILLE

WWTP CAPACITY EXPANSION PROJECT

STRUCTURAL

ACTIVATED SLUDGE (CARROUSEL BASIN) SECTIONS

NO.	ISSUE	BY	DATE
4	RECORD DRAWING	MRR	06/24/20
3	RFI-006	CCG	11/17/17
2	ISSUED FOR CONSTRUCTION	MRR	11/16/16
1	ADDENDUM NO. 6	MRR	7/28/16

VERIFY SCALE Bar is one inch on original drawing. If not one inch on this sheet, adjust scale.
0 1"

F&N JOB NO. CVL14259
DESIGNED MRR
DRAWN JAW/JLM
CHECKED AD
FILE NAME ST-BNR-SC-CONC02.dwg

SHEET AS-S7
SEQ.

ACAD Rel: 21.0s (LMS Tech)
Filename: N:\ST\ST-BNR-SC-CONC02.dwg
Last Saved: 6/17/2020 11:07 AM Saved By: 02198

Plot Date: 6/18/2020 11:16 AM Plot By: 02198 Filename: N:\ST\ST-BNR-SC-CONC02.dwg

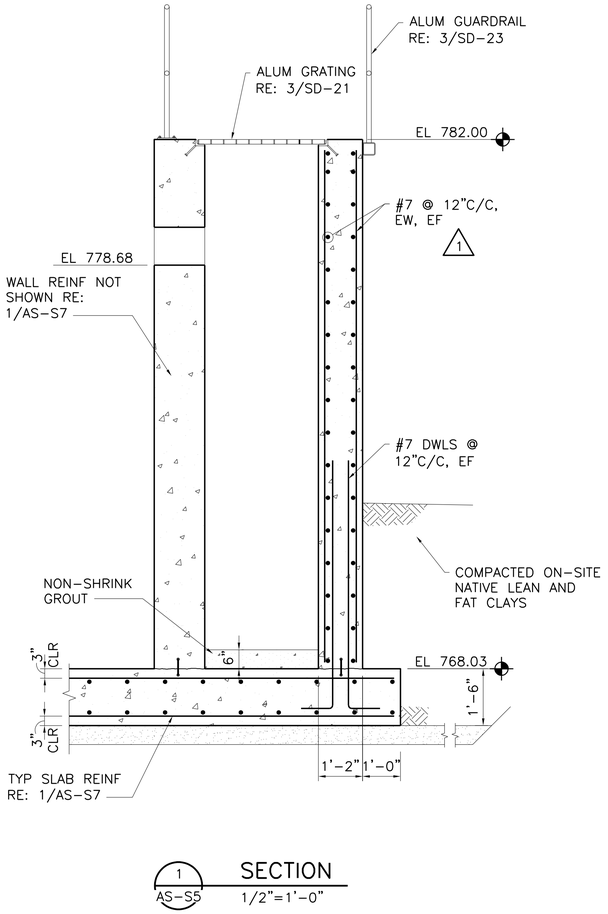

1 AS-S5 SECTION 1/2"=1'-0"

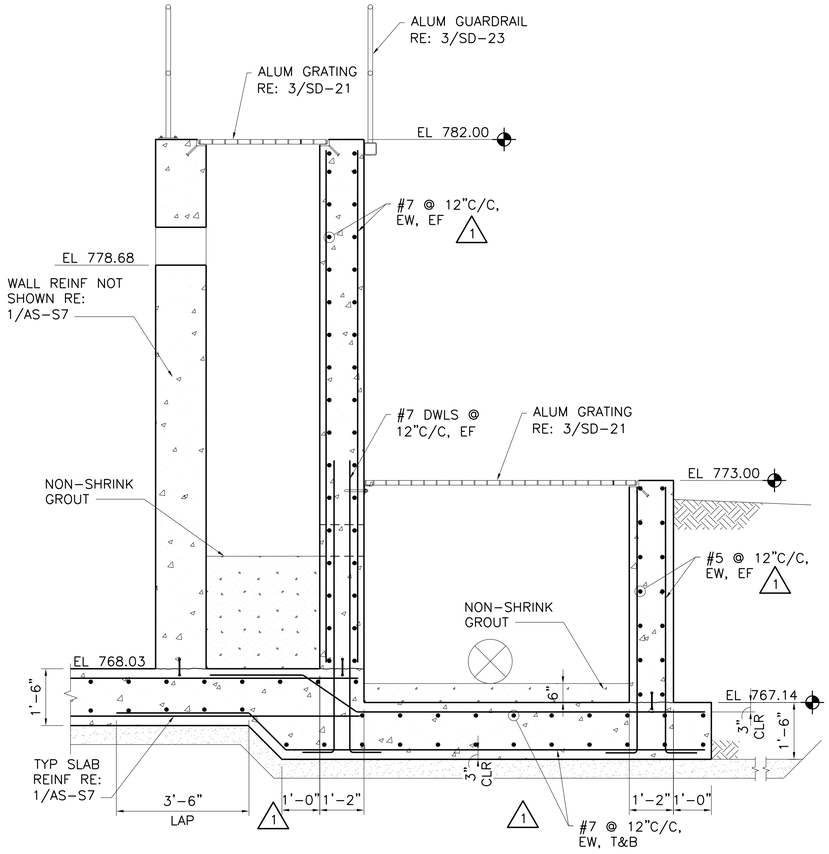

2 AS-S5 SECTION 1/2"=1'-0"

0 1' 2' 4'
1/2"=1'-0"

This Record Drawing is a combination of the sealed engineering contract drawings for this project, modified by information furnished by the contractor reflecting changes in the Project made during construction. The original sealed drawings are on file at the offices of
FREESE AND NICHOLS, INC.
RECORD DRAWINGS PREPARED ON:
6/24/2020

Freese and Nichols, Inc.
Texas Registered Engineering Firm F-2144

THE SEAL APPEARING ON THIS DOCUMENT WAS AUTHORIZED BY JUSTIN A. BELEW, P.E. 113243 ON: 7/22/2020
IT IS NOT TO BE USED FOR BIDDING, PERMITTING OR CONSTRUCTION PURPOSES UNLESS THE PROFESSIONAL ENGINEER NAMED ABOVE IS RESPONSIBLE FOR THE PROJECT AS DEFINED UNDER THE TEXAS ENGINEERING PRACTICE ACT.

FREESE NICHOLS
4040 Broadway Street, Suite 600
San Antonio, Texas 78209-6350
Phone: (210) 824-3800
Fax: (210) 298-1801
Web - www.freese.com

CITY OF CASTROVILLE

WWTP CAPACITY EXPANSION PROJECT

STRUCTURAL

ACTIVATED SLUDGE (CARROUSEL BASIN) SECTIONS

NO.	ISSUE	BY	DATE
1	RECORD DRAWING	MRR	06/24/20
2	ISSUED FOR CONSTRUCTION	MRR	11/16/16
1	ADDENDUM NO. 6	MRR	7/28/16

VERIFY SCALE Bar is one inch on original drawing. If not one inch on this sheet, adjust scale.
0 1"

F&N JOB NO. CVL14259
DATE 6/10/16
DESIGNED MRR
DRAWN JAW/JLM
CHECKED AD
FILE NAME ST-BNR-SC-CONC03.dwg

SHEET AS-S8
SEQ.

ACAD Rel: 21.0s (LMS Tech)
Filename: N:\ST\ST-BNR-SC-CONC03.dwg
Last Saved: 6/17/2020 11:12 AM Saved By: 02198

Plot Date: 6/18/2020 11:16 AM Plot By: 02198 Filename: N:\ST\ST-BNR-SC-CONC03.dwg

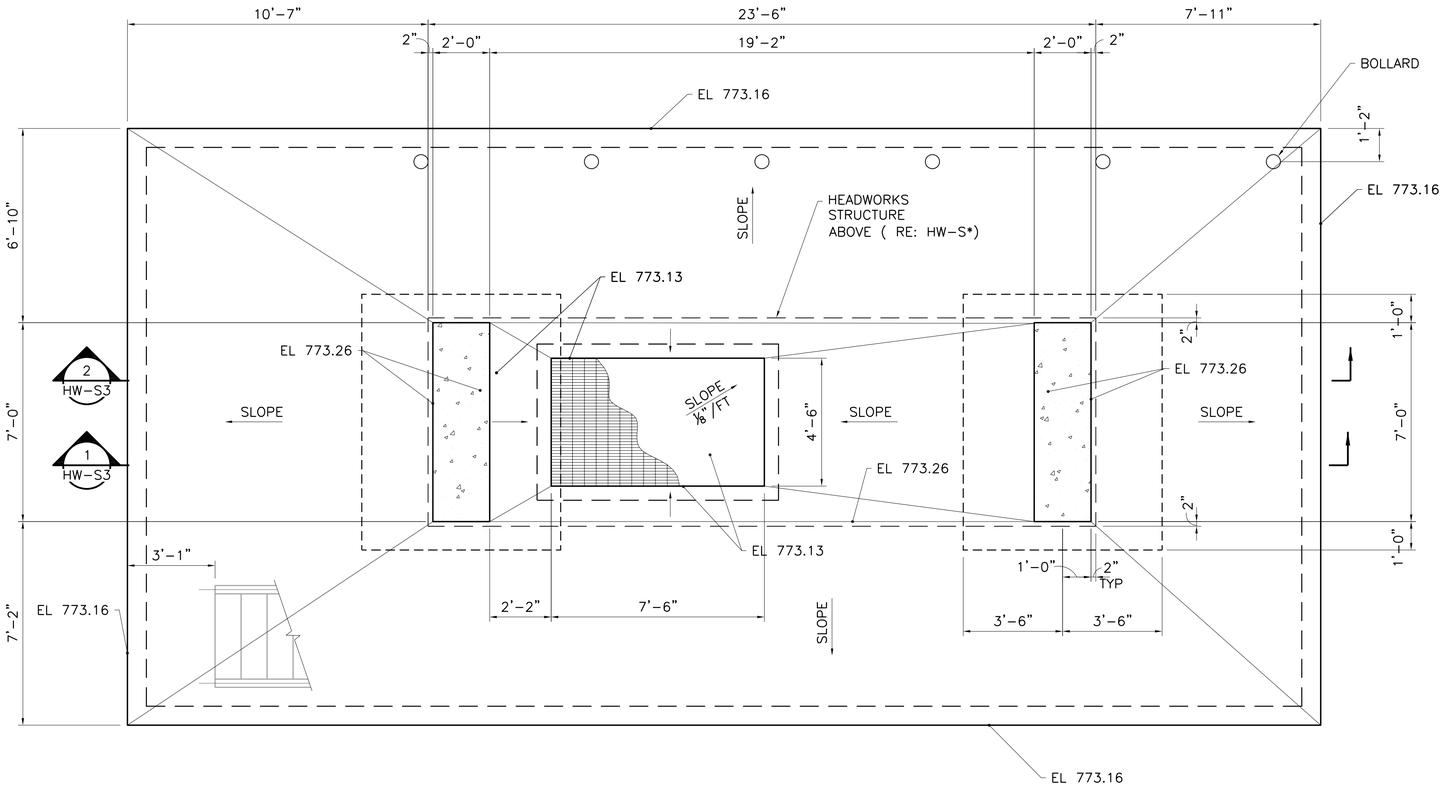

NORTH 1 — ALUMINUM INJECTION SLAB PLAN
3/8"=1'-0"

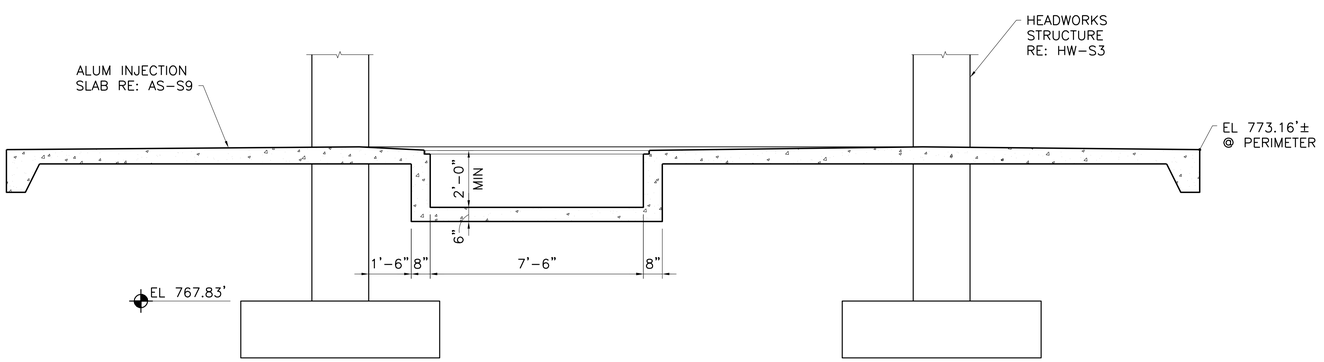

1 SH-S1 — SECTION
3/8"=1'-0"

0 1' 2' 4'
3/8"=1'-0

This Record Drawing is a combination of the sealed engineering contract drawings for this project, modified by information furnished by the contractor reflecting changes in the Project made during construction. The original sealed drawings are on file at the offices of
FREESE AND NICHOLS, INC.
RECORD DRAWINGS PREPARED ON:
6/24/2020

Freese and Nichols, Inc.
Texas Registered Engineering Firm F-2144

THE SEAL APPEARING ON THIS DOCUMENT WAS AUTHORIZED BY MARK R. RUPPER, P.E. 83743 ON 6/24/2020. RELEASED FOR THE PURPOSES OF CONSTRUCTION. IT IS NOT TO BE USED FOR BIDDING OR PERMITTING PURPOSES. THE AUTHORIZATION OF THE RESPONSIBLE ENGINEER IS DEFINED UNDER THE TEXAS ENGINEERING PRACTICE ACT.

FREESE NICHOLS
4040 Broadway Street, Suite 600
San Antonio, Texas 78209-6350
Phone - (210) 298-8000
Fax - (210) 298-9801
Web - www.freese.com

CITY OF CASTROVILLE

WWTP CAPACITY EXPANSION PROJECT

STRUCTURAL

ACTIVATED SLUDGE (CARROUSEL BASIN)
ALUM INJECTION PLAN & SECTIONS

NO.	ISSUE	BY	DATE
2	RECORD DRAWING	MRR	06/24/20
1	ISSUED FOR CONSTRUCTION	MRR	11/16/16

VERIFY SCALE Bar is one inch on original drawing. If not one inch on this sheet, adjust scale.
0 1"

FAN JOB NO. CVL14259
DATE 6/10/16
DESIGNED MRR
DRAWN JAW/JLM
REVISED
CHECKED AD
FILE NAME ST-INJ-PL-FNDN.dwg

SHEET AS-S9
SEQ.

ACAD Rel: 21.0s (LMS Tech)
Filename: N:\ST\ST-INJ-PL-FNDN.dwg
Last Saved: 6/18/2020 10:49 AM Saved By: 02198

Plot Date: 6/18/2020 11:16 AM Plot By: 02198 Filename: N:\ST\ST-INJ-PL-FNDN.dwg

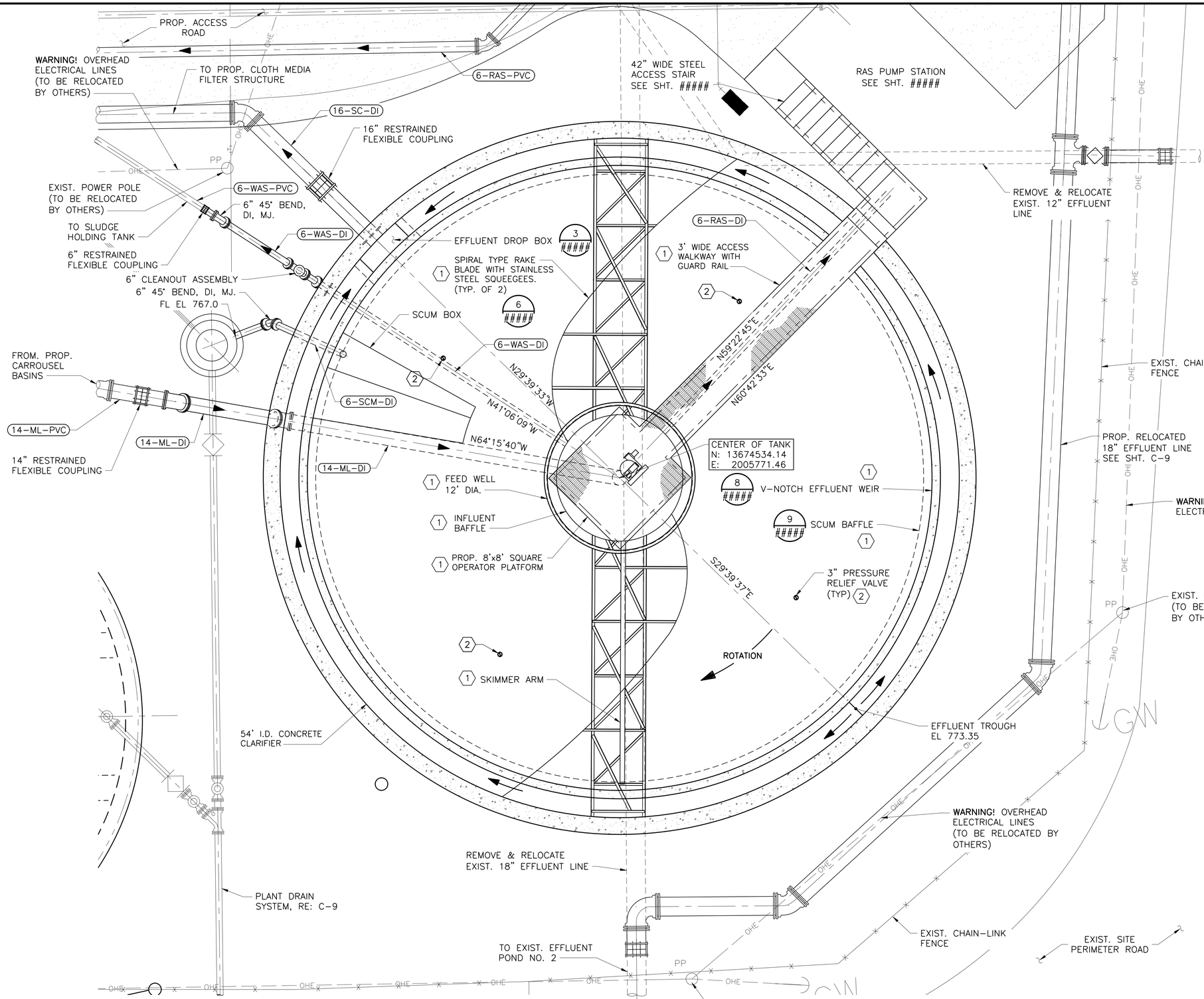

GENERAL NOTES:

1. CONTRACTOR SHALL VERIFY ALL DIMENSIONS, LOCATIONS, AND ELEVATIONS PRIOR TO CONDUCTING WORK.
2. COORDINATE WITH CLARIFIER MECHANISM MANUFACTURER ON NECESSARY SUPPORTS FOR INFLUENT BAFFLE AND WALKWAY.
3. CLARIFIER MECHANISM SHOWN IS REPRESENTATIVE OF OVIVO. MODIFY AS REQUIRED, FOR SYSTEMS PROVIDED IN BID AT NO ADDITIONAL COST TO THE OWNER.
4. ALL PIPE PENETRATIONS IN NEW STRUCTURES SHALL BE ACCORDING TO STANDARD DETAIL 342-TYPE F.
5. REFER TO SECTION 01 35 00 FOR SPECIFIC REQUIREMENTS OF SCHEDULING CONSTRUCTION ACTIVITIES.
6. SLOPE CLARIFIER FLOOR PER STRUCTURAL SHEETS.

NOTES BY SYMBOL "⟨X⟩":

⟨1⟩ PROVIDED BY EQUIPMENT MANUFACTURER.
⟨2⟩ 3" PRESSURE RELIEF VALVE

This Record Drawing is a combination of the sealed engineering contract drawings for this project, modified by information furnished by the contractor reflecting changes in the Project made during construction. The original sealed drawings are on file at the offices of FREESE AND NICHOLS, INC.
RECORD DRAWINGS PREPARED ON: 06/24/20

0 1' 2' 4' 8'
1/4"=1'-0"

CLARIFIER PLAN

NORTH 1 SC-M1 1/4" = 1'-0"

Freese and Nichols, Inc.
Texas Registered Engineering Firm F-2144

THE SEAL (NA) ORIGINALLY APPEARED ON THIS DOCUMENT WAS AUTHORIZED BY JASON COCKLIN, P.E. DATED 6/10/16. IT IS A VIOLATION OF THE SEALED DOCUMENT WITHOUT PROPER ALTERATION OF THE SEAL AND NOTATION OF THE ALTERATION TO ALTER THIS DOCUMENT. IT IS ALSO AN OFFENSE UNDER THE TEXAS ENGINEERING PRACTICE ACT

FREESE NICHOLS
4040 Broadway Street, Suite 600
San Antonio, Texas 78209-6350
Phone (210) 824-3000
Fax (210) 284-9401
Web - www.freese.com

CITY OF CASTROVILLE

WWTP CAPACITY EXPANSION PROJECT

MECHANICAL

PROPOSED SECONDARY CLARIFIER NO. 1 PLAN VIEW

F&N JOB NO. CVL14259
DATE 6/10/16
DESIGNED JC
DRAWN DDH
CHECKED TWS
FILE NAME WW-CLA-PL-MECH01.dwg

NO.	ISSUE	BY	DATE
1	RECORD DRAWINGS	JC	06/24/20
	ISSUED FOR CONSTRUCTION	JC	11/16/16

VERIFY SCALE Bar is one inch on original drawing. If not one inch on this sheet, adjust scale.
0 1"

SHEET SC-M1
SEQ.

ACAD Rel: 21.0s (LMS Tech)
Filename: N:\WW\Drawings\WW-CLA-PL-MECH01.dwg
Last Saved: 10/9/2019 2:22 PM Saved By: 03576

Plot Date: 6/18/2020 5:15 PM Plot By: 90119 Filename: N:\WW\Drawings\WW-CLA-PL-MECH01.dwg

NOTES BY SYMBOLS "(X)"

(1) PROVIDED BY EQUIPMENT MANUFACTURER.

(2) DENSITY CURRENT BAFFLE. 30° DECLINATION FROM HORIZONTAL. 34" HORIZONTAL PROJECTION. NEFCO OR APPROVED EQUAL.

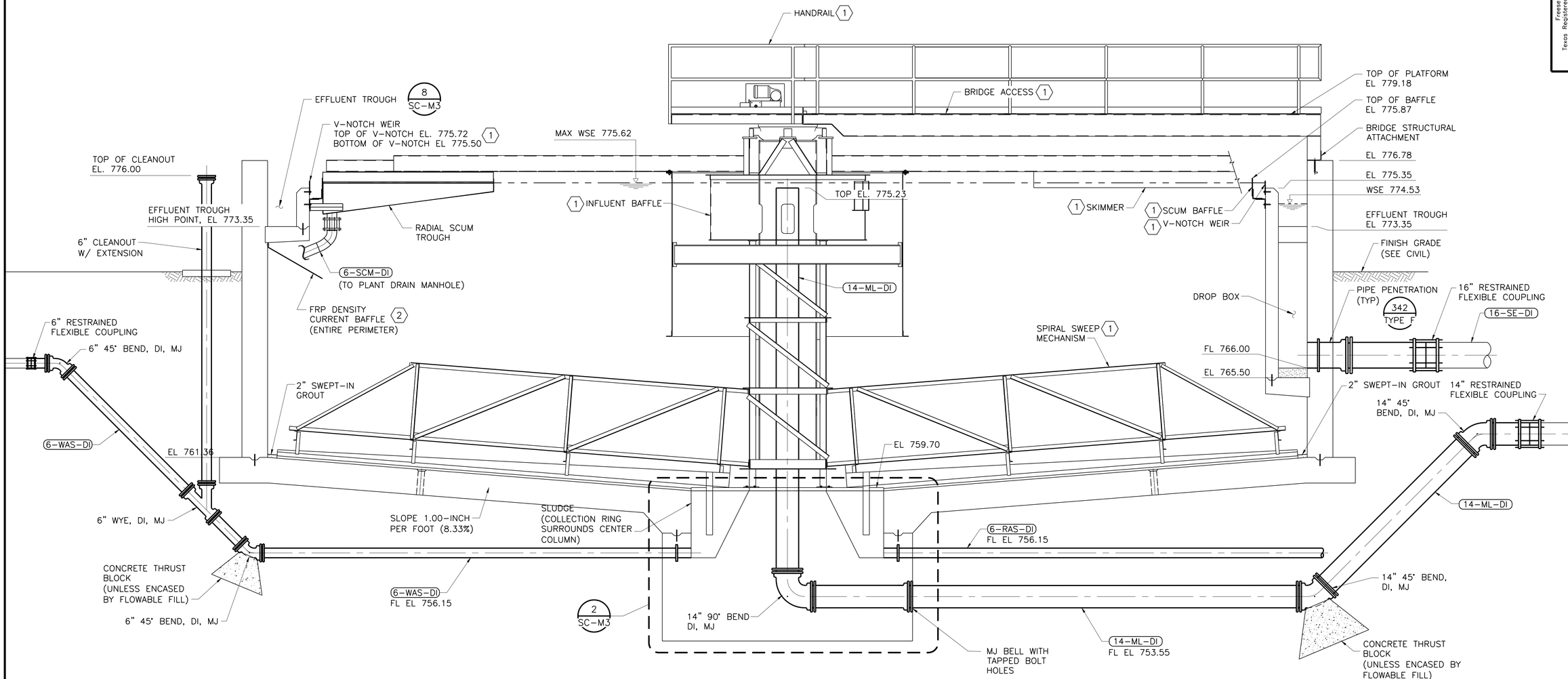

1 SC-M2 ILLUSTRATIVE SECTION VIEW
3/8"=1'-0"

GENERAL NOTES:

1. COORDINATE WITH CLARIFIER MECHANISM MANUFACTURER ON NECESSARY SUPPORTS FOR INFLUENT BAFFLE AND WALKWAY.
2. CLARIFIER MECHANISM SHOWN IS REPRESENTATIVE OF OVIVO. ALL APPROVED MANUFACTURERS ARE SIMILAR IN CONFIGURATION AND EQUIPMENT TYPE. MODIFY AS REQUIRED FOR SYSTEMS PROVIDED IN BID AT NO ADDITIONAL COST TO THE OWNER.
3. ALL PIPE PENETRATIONS IN NEW STRUCTURES SHALL BE ACCORDING TO STANDARD DETAIL 342-TYPE F.
4. REFER TO CONSTRUCTION SEQUENCING FOR SPECIFIC REQUIREMENTS OF SCHEDULING CONSTRUCTION ACTIVITIES.
5. CONTRACTOR SHALL COORDINATE WITH CLARIFIER MECHANISM MANUFACTURER TO PROVIDE AL STRUCTURAL SUPPORT FOR THE CENTER WALL, SPIRAL SWEEP WALKWAY, SKIMMER AND SCUM TROUGH.
6. STRUCTURAL ATTACHMENT AND BRIDGE HEIGHT SHALL BE PER MANUFACTURERS RECOMMENDATIONS. BRIDGE SUPPORTS SHALL ALLOW FOR ADEQUATE CLEARSPACE FOR MECHANISM ROTATION.
7. ALL FASTENERS SHALL BE 316 SS.

This Record Drawing is a combination of the sealed engineering contract drawings for this project, modified by information furnished by the contractor reflecting changes in the Project made during construction. The original sealed drawings are on file at the offices of
FREESE AND NICHOLS, INC.
4055 INTERNATIONAL PLAZA, SUITE 200
FORT WORTH, TEXAS 76109-4895
(817) 335-7300
RECORD DRAWINGS PREPARED ON: 06/24/2020

0 1' 2' 4'
3/8"=1'-0

Freese and Nichols, Inc.
Texas Registered Engineering Firm F-2144

THE SEAL (NA) ORIGINALLY APPEARED ON THIS DOCUMENT WAS AUTHORIZED BY JASON COGDILL P.E. ON 06/24/2020. IT MAY NOT BE USED TO REPRESENT A REVISED DOCUMENT WITHOUT PROPER AUTHORIZATION OF THE REGISTERED ENGINEER NAMED HEREON. ALTERATION OF A SEALED DOCUMENT WITHOUT PROPER AUTHORIZATION AND ADDITIONAL SEAL MAY BE A VIOLATION OF THE TEXAS ENGINEERING PRACTICE ACT

FREESE NICHOLS
4040 Broadway Street, Suite 600
San Antonio, Texas 78209-6350
Phone - (210) 829-3000
Fax - (210) 826-8901
Web - www.freese.com

CITY OF CASTROVILLE

WWTP CAPACITY EXPANSION PROJECT

MECHANICAL

PROPOSED SECONDARY CLARIFIER NO. 1
ILLUSTRATIVE SECTION VIEW

F&N JOB NO.	CVL14259
DATE	6/10/16
DESIGNED	JC
DRAWN	TEF
CHECKED	TWS
FILE NAME	WW-CLA-SC-SECT01.dwg

NO.	ISSUE	DATE	BY
	RECORD DRAWINGS	06/24/20	JC
1	ISSUED FOR CONSTRUCTION	11/16/16	JC

VERIFY SCALE Bar is one inch on original drawing. If not one inch on this sheet, adjust scale.
0 1"

SHEET SC-M2
SEQ.

ACAD Rel: 21.0s (LMS Tech)
Filename: N:\WW\Drawings\WW-CLA-SC-SECT01.dwg
Last Saved: 10/9/2019 2:14 PM Saved By: 03576

Plot Date: 6/18/2020 5:16 PM Plot By: 90119 Filename: N:\WW\Drawings\WW-CLA-SC-SECT01.dwg

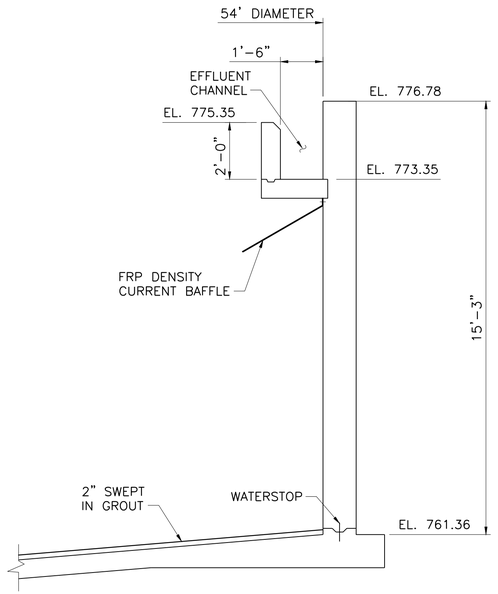

1 SC-M3 TYPICAL WALL SECTION

3/8" = 1'-0"

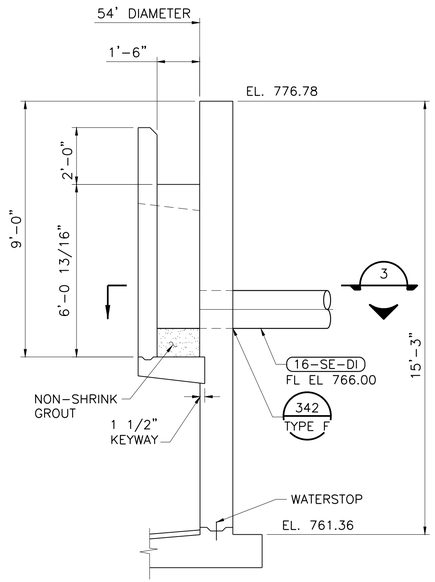

2 SC-M3 SECTION @ DROP BOX

3/8" = 1'-0"

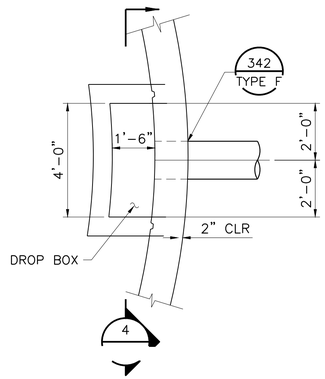

3 SC-M3 PLAN @ DROP BOX

3/8" = 1'-0"

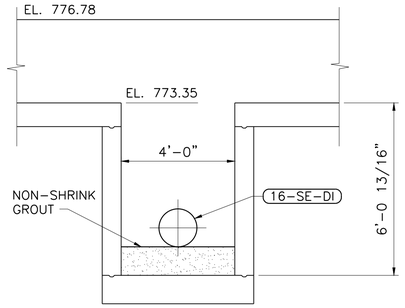

4 SC-M3 SECTION @ DROP BOX

3/8" = 1'-0"

GENERAL NOTES:

1. CONTRACTOR SHALL VERIFY ALL DIMENSIONS, LOCATIONS, AND ELEVATIONS PRIOR TO CONDUCTING WORK.
2. COORDINATE WITH CLARIFIER MECHANISM MANUFACTURER ON NECESSARY SUPPORTS FOR INFLUENT BAFFLE AND WALKWAY.
3. CLARIFIER MECHANISM SHOWN IS REPRESENTATIVE OF OVIVO. ALL APPROVED MANUFACTURERS ARE SIMILAR IN CONFIGURATION AND EQUIPMENT TYPE. MODIFY AS REQUIRED FOR SYSTEMS PROVIDED IN BID AT NO ADDITIONAL COST TO THE OWNER.
4. ALL PIPE PENETRATIONS IN NEW STRUCTURES SHALL BE ACCORDING TO STANDARD DETAIL 342-TYPE F.
5. REFER TO SECTION 01 35 00, CONSTRUCTION SEQUENCING FOR SPECIFIC REQUIREMENTS OF SCHEDULING CONSTRUCTION ACTIVITIES.
6. ALL FASTENERS SHALL BE 316 SS.

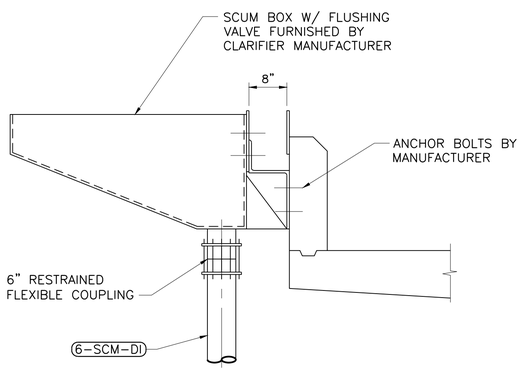

5 SC-M3 DETAIL - SCUM BOX

3/4" = 1'-0"

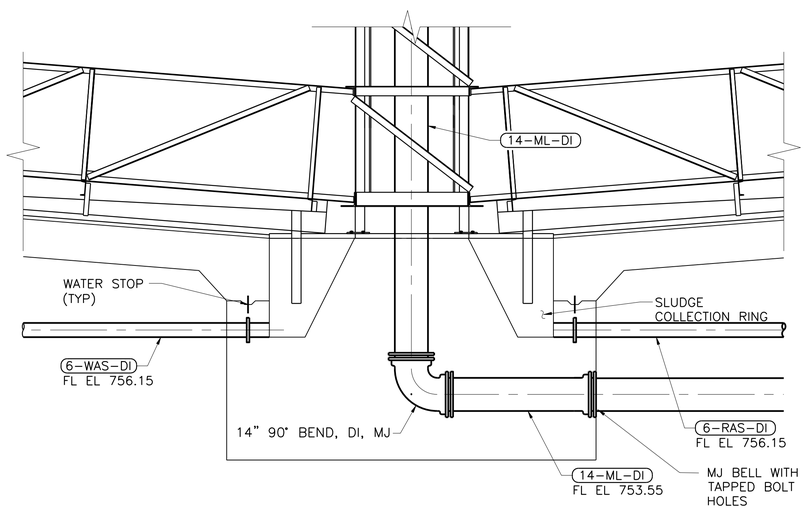

6 SC-M3 DETAIL - CENTER BASE

NOT TO SCALE

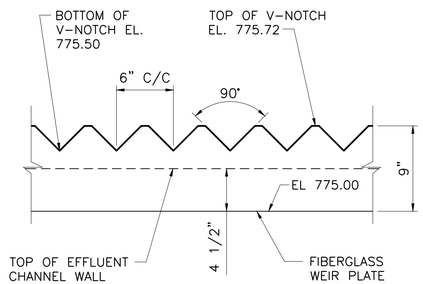

7 SC-M3 EFFLUENT WEIR

1 1/2"=1'-0"

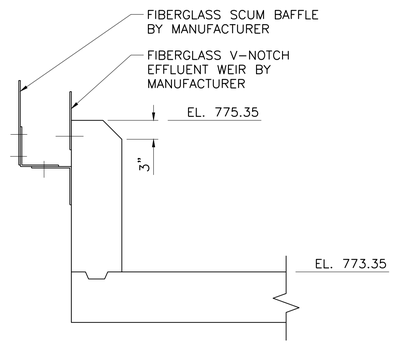

8 SC-M3 SCUM BAFFLE

1"=1'-0"

This Record Drawing is a combination of the sealed engineering contract drawings for this project, modified by information furnished by the contractor reflecting changes in the Project made during construction. The original sealed drawings are on file at the offices of **FREESE AND NICHOLS, INC.**
RECORD DRAWINGS PREPARED ON: 06/24/20

0 4" 8" 1'
1-1/2"=1'-0"

0 6" 1' 2'
1"=1'-0"

0 6" 1' 2'
3/4"=1'-0

0 1' 2' 4'
3/8"=1'-0

Freese and Nichols, Inc.
Texas Registered Engineering Firm F-2144

THE SEAL (NOT ORIGINALLY AFFIXED ON THIS DOCUMENT WAS AUTHORIZED BY JASON COCKLIN, P.E.
PRINTED NAME OF REGISTERED PROFESSIONAL ENGINEER
ALTERATION OF A SEALED DOCUMENT WITHOUT PROPER AUTHORIZATION AND SUBSEQUENT DISTRIBUTION IS A CRIMINAL OFFENSE UNDER THE TEXAS ENGINEERING PRACTICE ACT

FREESE NICHOLS
4040 Broadway, Street, Suite 600
San Antonio, Texas 78209-6350
Phone - (210) 538-2500
Fax - (210) 281-4901
Web - www.freese.com

CITY OF CASTROVILLE

WWTP CAPACITY EXPANSION PROJECT

MECHANICAL

PROPOSED SECONDARY CLARIFIER NO. 1 MISCELLANEOUS DETAILS

NO.	ISSUE	BY	DATE
1	RECORD DRAWINGS	JC	06/24/20
0	ISSUED FOR CONSTRUCTION	JC	11/16/16

VERIFY SCALE Bar is one inch on original drawing. If not one inch on this sheet, adjust scale.

FNI JOB NO.	CVL14259
DATE	6/10/16
DESIGNED	JC
DRAWN	TEF
CHECKED	TWC
FILE NAME	WW-CLA-SC-SECT02.dwg

SHEET SC-M3
SEQ.

ACAD Rel: 21.0s (LMS Tech)
Filename: N:\WW\Drawings\WW-CLA-SC-SECT02.dwg
Last Saved: 10/8/2019 2:42 PM Saved By: 03576

Plot Date: 6/18/2020 5:17 PM Plot By: 90119 Filename: N:\WW\Drawings\WW-CLA-SC-SECT02.dwg

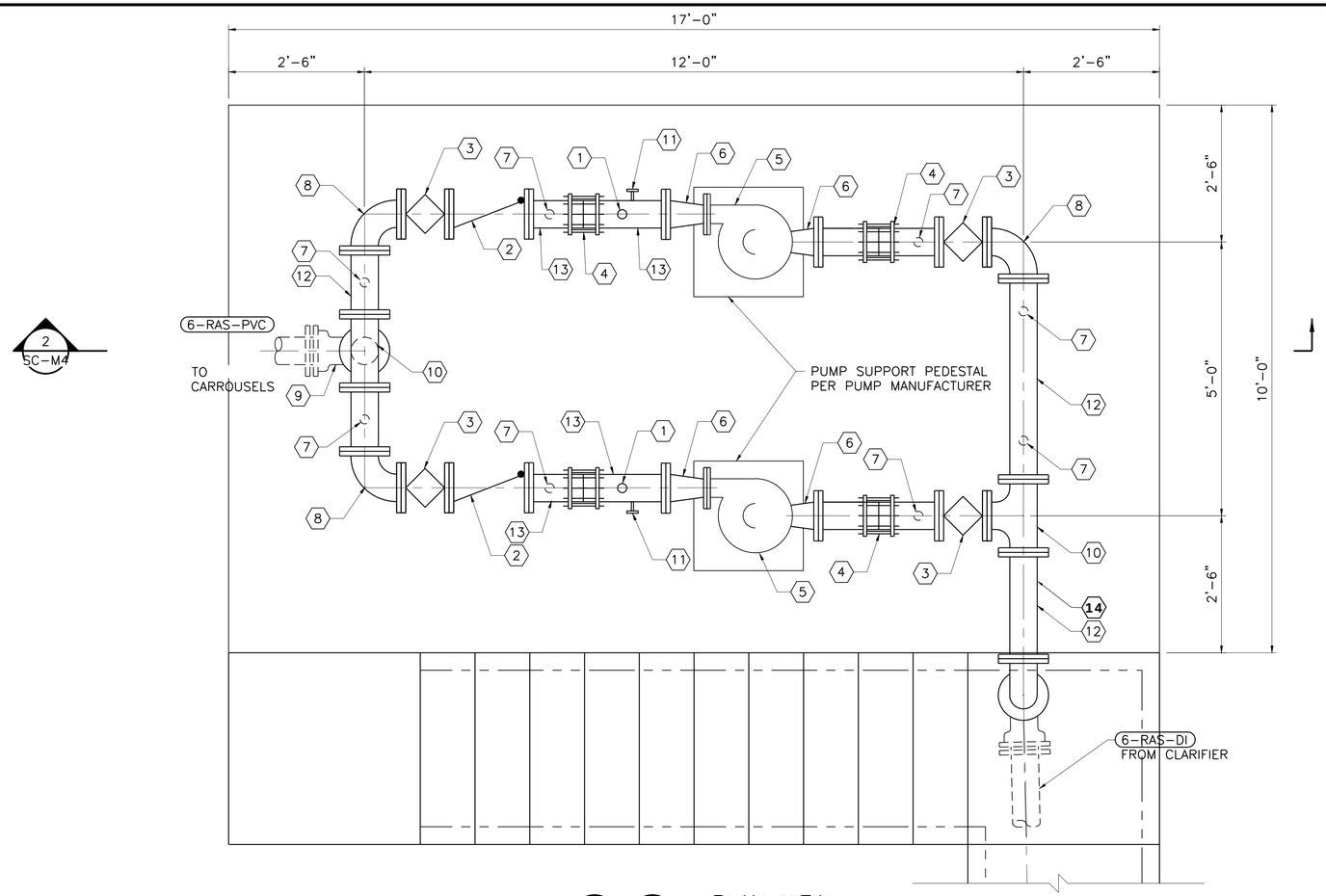

1 SC-M4 PLAN VIEW
3/4" = 1'-0"

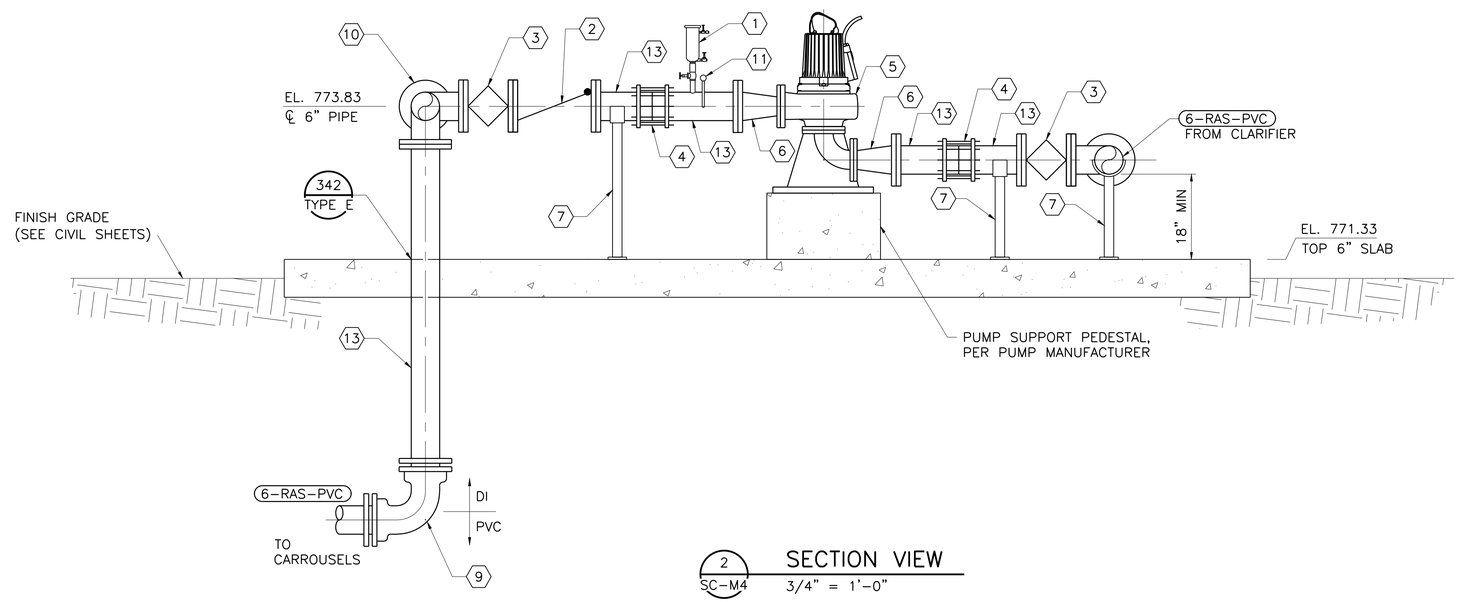

2 SC-M4 SECTION VIEW
3/4" = 1'-0"

NOTES BY SYMBOLS "X"

1. 1" **ARV**
2. 6" CHECK VALVE, FLG
3. 6" PLUG VALVE, FLG
4. 6" RESTRAINED HARNESS (TYPE A), SEE DTL. 366
5. SUBMERSIBLE DRY-PIT PUMPS PER SPECIFICATION SECTION 44 42 56.04
6. 6"x4" REDUCER, DI, FLG
7. PIPE SUPPORT (TYPE F), SEE DTL. 340
8. 6" 90° BEND, DI, FLG
9. 6" 90° BEND, DI, MJ
10. 6"x6"x6" TEE, FLG
11. PRESSURE GAUGE, SEE DTL. 358
12. 6" DI PIPE, FLG
13. 6" DI PIPE, FLGxPE
14. **1-1/2" FLUSHING VALVE CONNECTION W/ BALL VALVE**

NOTES:

1. ALL DIMENSIONS SHALL BE FIELD VERIFIED AND CONFIRMED BY EQUIPMENT SUPPLIER AND CONTRACTOR, PRIOR TO MANUFACTURING AND CONSTRUCTION.
2. ALL PIPING, VALVES, FITTINGS, ETC. TO BE COATED AND LINED IN ACCORDANCE WITH THE SPECIFICATIONS.
3. ALL ABOVE GRADE PIPING SHALL BE COATED IN ACCORDANCE WITH SPECIFICATION SECTION 09 96 00.01.
4. ALL BURIED VALVES AND HARDWARE SHALL BE WRAPPED IN 2 COATS OF WAX TAPE.

This Record Drawing is a combination of the sealed engineering contract drawings for this project, modified by information furnished by the contractor reflecting changes in the Project made during construction. The original sealed drawings are on file at the offices of FREESE AND NICHOLS, INC. RECORD DRAWINGS PREPARED ON: 06/24/20

0 6" 1' 2'
3/4"=1'-0

Freese and Nichols, Inc.
Texas Registered Engineering Firm F-2144

THE SEAL THAT ORIGINALLY APPEARED ON THIS DOCUMENT WAS AUTHORIZED BY STEPHANIE D. EDEN, P.E. TEXAS NO. 119092 ON 06/10/2016. ALTERATION OF A SEALED DOCUMENT WITHOUT PROPER NOTIFICATION OF THE RESPONSIBLE ENGINEER IS AN OFFENSE UNDER THE TEXAS ENGINEERING PRACTICE ACT.

FREESE AND NICHOLS
4040 Broadway Street, Suite 600
San Antonio, Texas 78209-6350
Phone - (210) 298-3800
Fax - (210) 298-3801
Web - www.freese.com

CITY OF CASTROVILLE
WWTP CAPACITY EXPANSION PROJECT

MECHANICAL
PROPOSED SECONDARY CLARIFIER NO. 1
RAS PUMP STATION PLAN AND SECTION

NO.	ISSUE	BY	DATE
2	RECORD DRAWINGS	CCG	06/24/20
1	ISSUED FOR CONSTRUCTION	CCG	11/16/16

F&N JOB NO. CVL14259
DATE 6/10/16
DESIGNED JBC
DRAWN TWS
REVISED
CHECKED TWS
FILE NAME WW-RAS-PL-MECH01.dwg

VERIFY SCALE 0 1
Bar is one inch on original drawing. If not one inch on this sheet, adjust scale.

SHEET SC-M4
SEQ.

ACAD Rel: 20.1s (LMS Tech)
Filename: N:\WW\Drawings\WW-RAS-PL-MECH01.dwg
Last Saved: 11/14/2016 10:36 AM Saved By: maj

Plot Date: 11/14/2016 10:36 AM Plot By: maj Filename: N:\WW\Drawings\WW-RAS-PL-MECH01.dwg

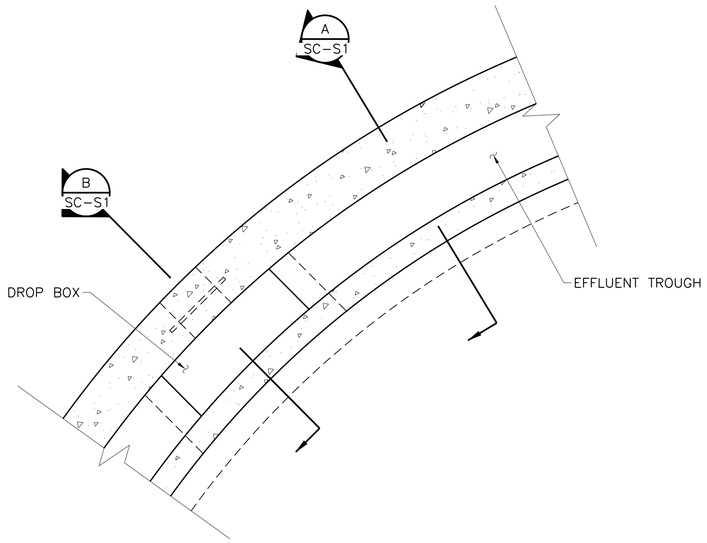

1 SC-S1 PLAN @ DROP BOX
1/2"=1'-0"

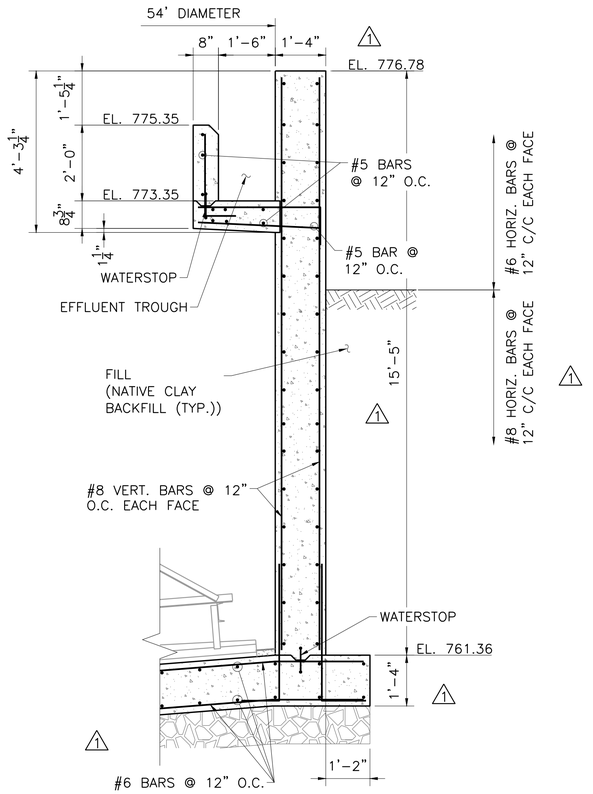

A SC-S1 TYPICAL WALL SECTION
1/2"=1'-0"

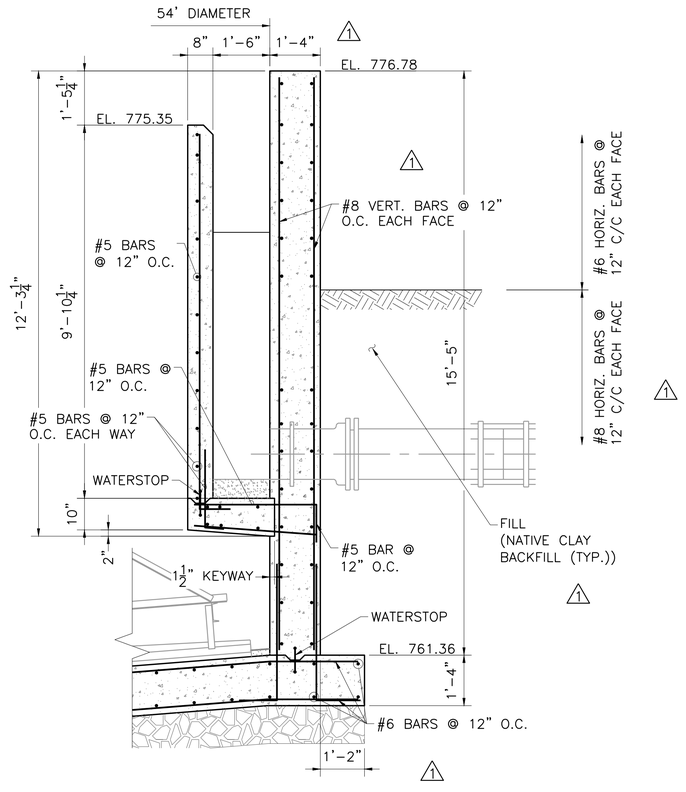

B SC-S1 SECTION @ DROP BOX
1/2"=1'-0"

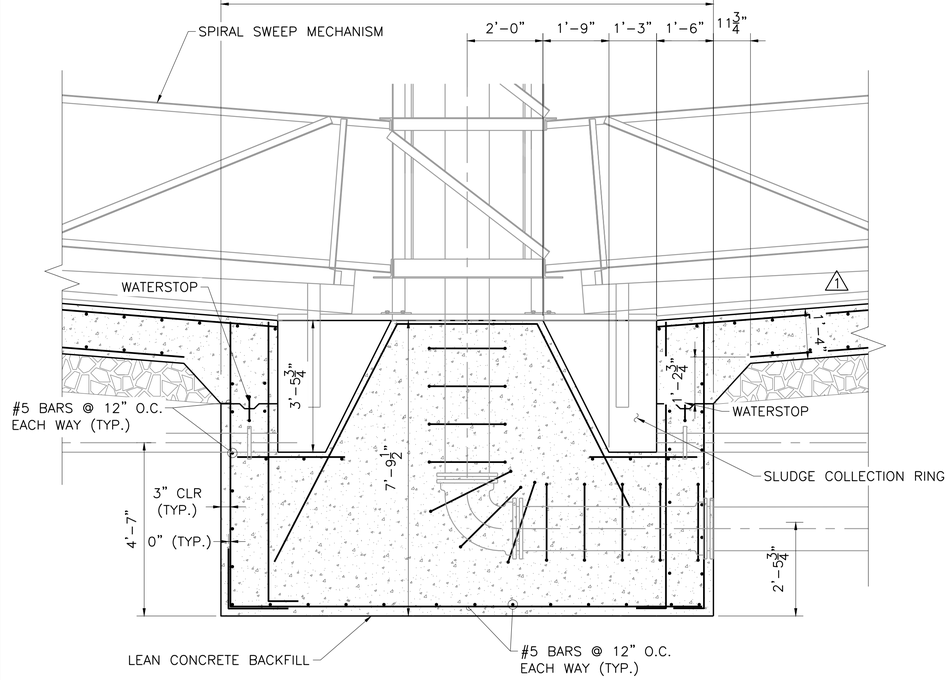

C SC-S1 DETAIL – CENTER BASE
1/2"=1'-0"

This Record Drawing is a combination of the sealed engineering contract drawings for this project, modified by information furnished by the contractor reflecting changes in the Project made during construction. The original sealed drawings are on file at the offices of
FREESE AND NICHOLS, INC.
RECORD DRAWINGS PREPARED ON: 06/24/20

0 1' 2' 4'
1/2"=1'-0"

Freese and Nichols, Inc.
Texas Registered Engineering Firm F-2144

THE SEAL (AS ORIGINALLY APPROVED) ON THIS DOCUMENT WAS AUTHORIZED BY SUSAN RAY TORNO, P.E. ANY UNFORESEEN USE OF, REUSE OF, OR MODIFICATION TO (AND/OR ALTERATION OF) THIS SEALED DOCUMENT WITHOUT PROPER AUTHORIZATION AND APPROPRIATE PROFESSIONAL REVIEW SHALL BE AT THE USER'S SOLE RISK AND WITHOUT LIABILITY TO THE AUTHOR AND HIS COMPANY. IT IS A VIOLATION OF LAW FOR ANY PERSON, UNLESS ACTING UNDER THE DIRECTION OF A LICENSED ENGINEER, TO ALTER THIS DOCUMENT IN ANY WAY. IT IS A VIOLATION OF LAW TO REMOVE OR ALTER THIS STATEMENT IN ANY WAY. IT IS A VIOLATION OF THE TEXAS ENGINEERING PRACTICE ACT TO MISREPRESENT AN ENGINEERING REPORT, SURVEY, PLAN OR DESIGN. AND IT IS A VIOLATION OF THE TEXAS ENGINEERING PRACTICE ACT TO ASSIST IN THE OFFENSE UNDER THE TEXAS ENGINEERING PRACTICE ACT.

FREESE NICHOLS
4040 Broadway, Street, Suite 600
San Antonio, Texas 78209-6350
Phone - (210) 298-8000
Fax - (210) 284-9401
Web - www.freese.com

CITY OF CASTROVILLE
WWTP CAPACITY EXPANSION PROJECT
STRUCTURAL
PROPOSED SECONDARY CLARIFIER NO. 1
STRUCTURAL DETAILS

FRN JOB NO. CVL14259			
DATE 6/10/16			
DESIGNED SRT			
DRAWN DKS			
REVISED			
CHECKED TWS			
FILE NAME ST-CLA-SC-SECT01.dwg			

NO.	ISSUE	BY	DATE
1	RECORD DRAWINGS	SRT	06/24/20
2	ISSUED FOR CONSTRUCTION	GB	11/16/16
3	ADDENDUM NO. 6	SRT	7-28-16

VERIFY SCALE Bar is one inch on original drawing. If not one inch on this sheet, adjust scale.
0 1"

SHEET SC-S1
SEQ.

ACAD Rel: 21.0s (LMS Tech)
Filename: N:\WW\Drawings\ST-CLA-SC-SECT01.dwg
Last Saved: 10/8/2019 2:41 PM Saved By: 03576
Plot Date: 6/18/2020 5:17 PM Plot By: 90119 Filename: N:\WW\Drawings\ST-CLA-SC-SECT01.dwg

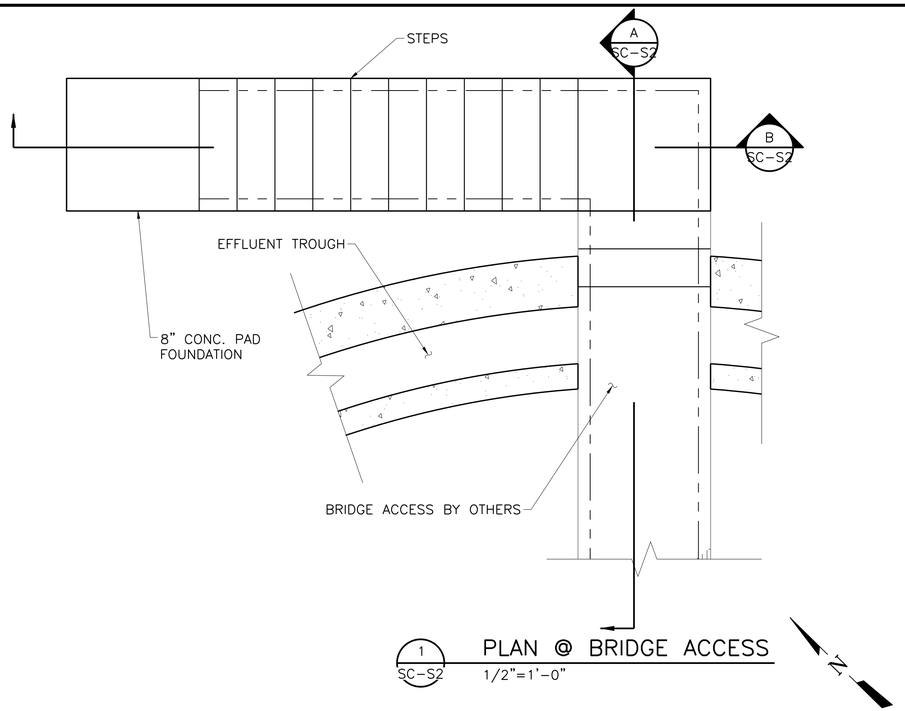

1 SC-S2 PLAN @ BRIDGE ACCESS
1/2"=1'-0"

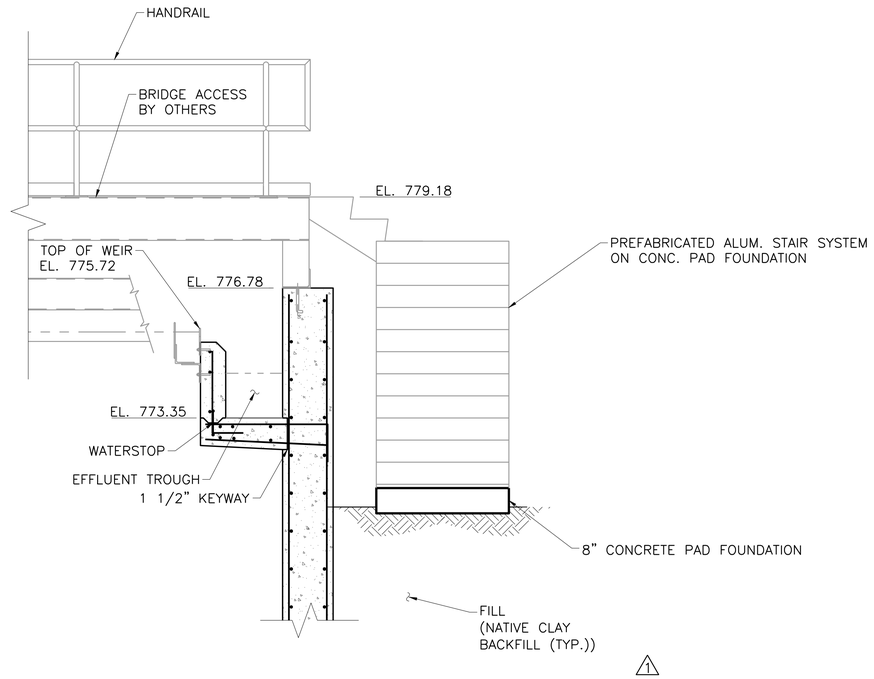

A SC-S2 WALL SECTION @ WALK WAY
1/2"=1'-0"

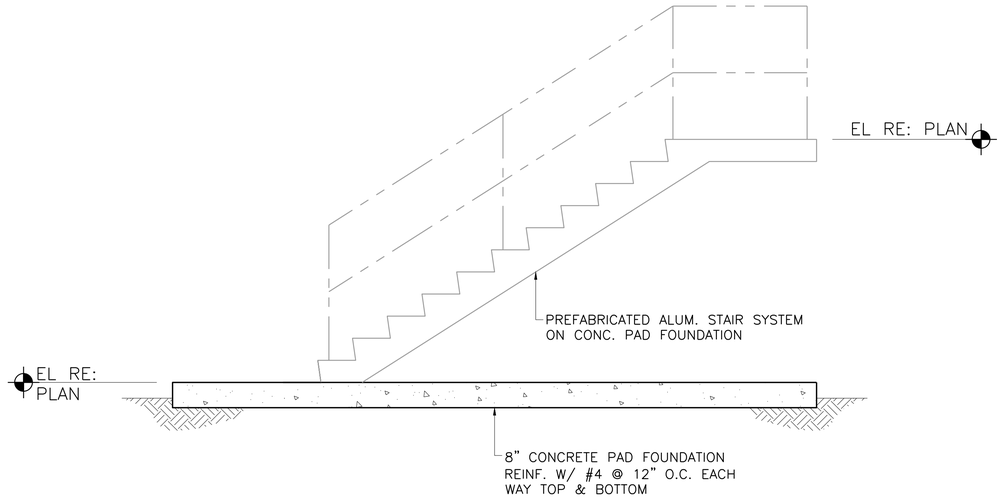

B SC-S2 STAIR SECTION
1/4"=1'-0"

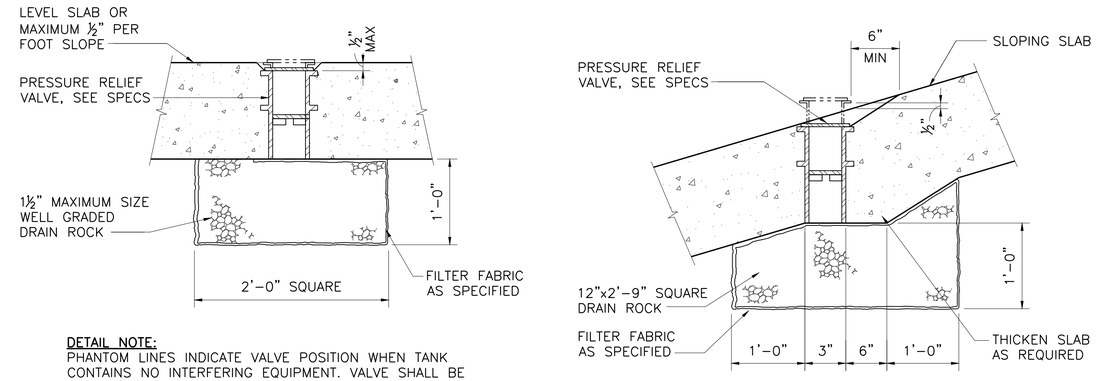

DETAIL NOTE:
PHANTOM LINES INDICATE VALVE POSITION WHEN TANK CONTAINS NO INTERFERING EQUIPMENT. VALVE SHALL BE RECESSED IN SLAB ½" WHEN EQUIPMENT IS PRESENT.

2 SC-S2 PRESSURE RELIEF VALVE IN CONCRETE SLAB
NOT TO SCALE

This Record Drawing is a combination of the sealed engineering contract drawings for this project, modified by information furnished by the contractor reflecting changes in the Project made during construction. The original sealed drawings are on file at the offices of
FREESE AND NICHOLS, INC.
RECORD DRAWINGS PREPARED ON: 06/24/20

0 1' 2' 4'
3/8"=1'-0

0 1' 2' 4'
1/2"=1'-0"

Freese and Nichols, Inc.
Texas Registered Engineering Firm F-2144

THE SEAL THAT ORIGINALLY APPEARED ON THIS DOCUMENT WAS AUTHORIZED BY SHANE RAY TORNO, P.E. TEXAS NO. 88499 ON 07/29/2016 (400 #6) ALTERATION OF A SEALED DOCUMENT WITHOUT PROPER NOTIFICATION OF THE RESPONSIBLE ENGINEER AN OFFENSE UNDER THE TEXAS ENGINEERING PRACTICE ACT

FREESE AND NICHOLS
4040 Broadway Street, Suite 600
San Antonio, Texas 78209-6350
Phone - (210) 298-3800
Fax - (210) 298-3801
Web - www.freese.com

CITY OF CASTROVILLE
WWTP CAPACITY EXPANSION PROJECT
STRUCTURAL
PROPOSED SECONDARY CLARIFIER NO. 1
MISCELLANEOUS STRUCTURAL DETAILS

NO.	ISSUE	BY	DATE
3	RECORD DRAWINGS	SRT	06/24/20
2	ISSUED FOR CONSTRUCTION	GB	11/16/16
1	ADDENDUM NO. 6	SRT	7-28-16

F&N JOB NO. CVL14259
DATE 6/10/16
DESIGNED CCG
DRAWN DDH
REVISED
CHECKED TWS
FILE NAME ST-CLA-SC-SECT02.dwg

VERIFY SCALE 0 1 Bar is one inch on original drawing. If not one inch on this sheet, adjust scale.

SHEET SC-S2
SEQ.

ACAD Rel: 21.0s (LMS Tech)
Filename: N:\WW\Drawings\ST-CLA-SC-SECT02.dwg
Last Saved: 10/8/2019 2:40 PM Saved By: 03576

Plot Date: 6/18/2020 5:18 PM Plot By: 90119 Filename: N:\WW\Drawings\ST-CLA-SC-SECT02.dwg

GENERAL NOTES:

1. ALL EQUIPMENT SHOWN ON THIS SHEET IS DESIGNED AROUND ASHBROOK SIMON-HARTLEY INC. ISO-DISC DISC FILTER. CONTRACTOR IS RESPONSIBLE FOR COORDINATION WITH MANUFACTURER FOR A COMPLETE AND OPERABLE SYSTEM.
2. ALL PIPING SHALL BE STAINLESS STEEL, 316 SS, WITH EXCEPTIONS AS NOTED IN DRAWING.
3. ALL PIPING ABOVE GRADE AND MINIMUM WATER SURFACE ELEVATION SHALL BE INSULATED.
4. CONTRACTOR SHALL COORDINATE THE SCOPE OF BACKWASH PIPING AND EQUIPMENT SUPPLY WITH THE MANUFACTURER. THE CONTRACTOR SHALL BE RESPONSIBLE FOR SUPPLY OF A COMPLETE AND OPERABLE SYSTEM, INCLUSIVE OF ALL PIPING, VALVING, MECHANICAL AND ELECTRICAL EQUIPMENT WHETHER OR NOT SHOWN HEREIN.
5. ALL PIPES ABOVE GRADE AND ABOVE MINIMUM WATER SURFACE ELEVATION THAT ARE 10" AND SMALLER, SHALL BE HEAT TRACED AND INSULATED. REFERENCE SPECIFICATIONS AND ELECTRICAL DRAWINGS FOR ADDITIONAL INFORMATION.

NOTES BY SYMBOL "⟨X⟩":

⟨1⟩ EQUIPMENT TO BE PROVIDED BY FILTER MANUFACTURER.

⟨2⟩ COORDINATE DISCHARGE BACKWASH PIPING SIZE WITH FILTER MANUFACTURER.

⟨3⟩ GRATING TO BE ALUMINUM OR STAINLESS STEEL AND SUPPLIED BY THE FILTER MANUFACTURER.

⟨4⟩ CONTRACTOR SHALL SUPPLY INDUSTRIAL HEATING BLANKET FOR EACH PUMP, TO BE STORED BY THE OWNER. HEATING BLANKETS SHALL BE 120V, FREEZEPRO BY UNITHERM INTERNATIONAL, INC., OR APPROVED EQUAL, SIZED TO COMPLETELY COVER EACH PUMP.

⟨5⟩ PROVIDE A 3-INCH PLUG VALVE ON A VERTICAL RUN FOR THROTTLING.

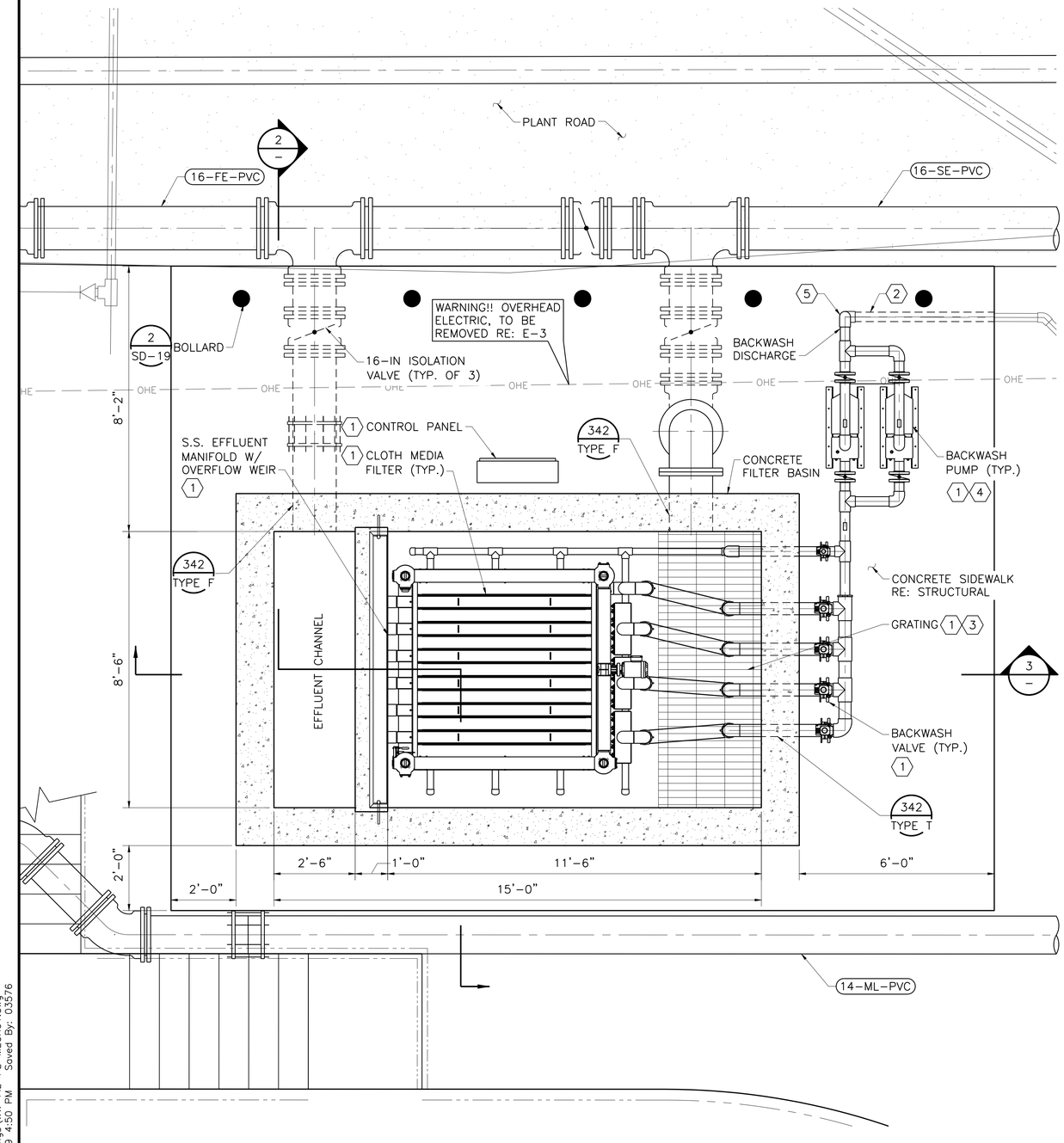

1 — TOP PLAN
1/2"=1'-0"

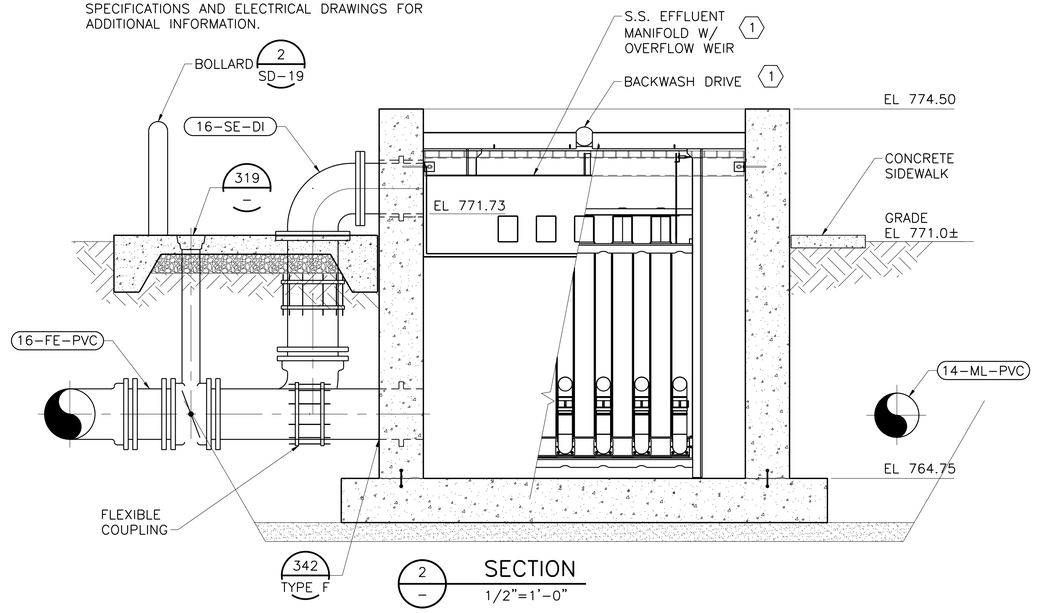

2 — SECTION
1/2"=1'-0"

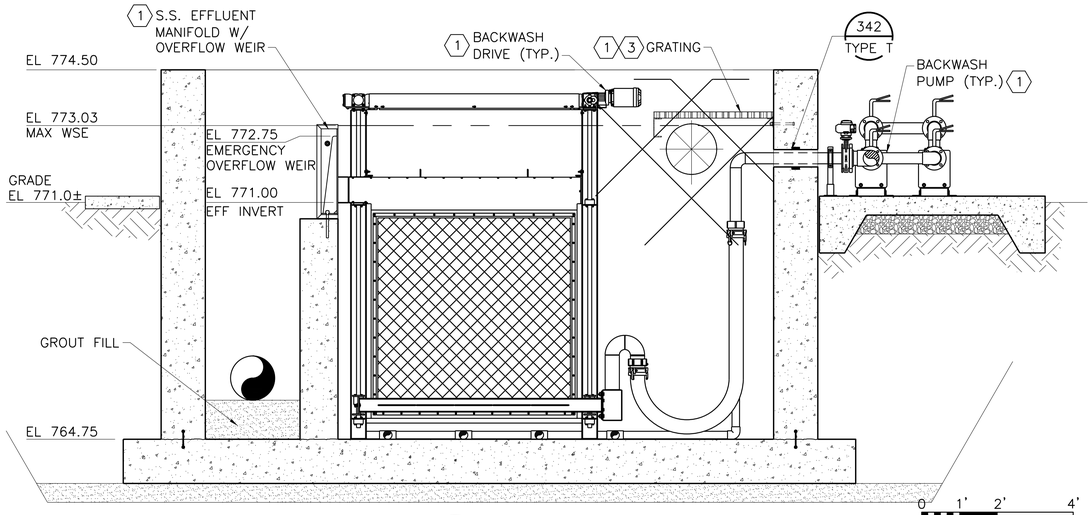

3 — SECTION
1/2"=1'-0"

This Record Drawing is a combination of the sealed engineering contract drawings for this project, modified by information furnished by the contractor reflecting changes in the Project made during construction. The original sealed drawings are on file at the offices of
FREESE AND NICHOLS, INC.
RECORD DRAWINGS PREPARED ON:
06/24/20

Freese and Nichols, Inc.
Texas Registered Engineering Firm F-2144

THE SEAL (NA) ORIGINALLY APPEARED ON THIS DOCUMENT WAS AUTHORIZED BY GERARD L. BOSCHER P.E. ON (DATE) ____. ALTERATION OF A SEALED DOCUMENT WITHOUT PROPER AUTHORITY OR THE ISSUANCE OF A COPY OF A SEALED DOCUMENT IS AN OFFENSE UNDER THE TEXAS ENGINEERING PRACTICE ACT

FREESE NICHOLS
4040 Broadway, Street, Suite 600
San Antonio, Texas 78209-6350
Phone - (210) 826-3500
Fax - (210) 826-8901
Web - www.freese.com

CITY OF CASTROVILLE
WWTP CAPACITY EXPANSION PROJECT
MECHANICAL
FILTER
TOP PLAN, AND SECTIONS I

	BY	DATE	
FNI JOB NO. CVL14259			
DATE 6/10/16			
DESIGNED GB			
DRAWN MAJ	GB	06/24/20	RECORD DRAWINGS
REVISED -	GB	11/16/16	ISSUED FOR CONSTRUCTION
CHECKED TWS			
FILE NAME WW-FIL-PL-MECH01.dwg			

NO. ISSUE

VERIFY SCALE Bar is one inch on original drawing. If not one inch on this sheet, adjust scale.
0 1"

SHEET F-M1
SEQ.

ACAD Rel: 21.0s (LMS Tech)
Filename: N:\WW\Drawings\WW-FIL-PL-MECH01.dwg
Last Saved: 10/8/2019 4:50 PM Saved By: 03576

Plot Date: 6/18/2020 5:20 PM Plot By: 90119 Filename: N:\WW\Drawings\WW-FIL-PL-MECH01.dwg

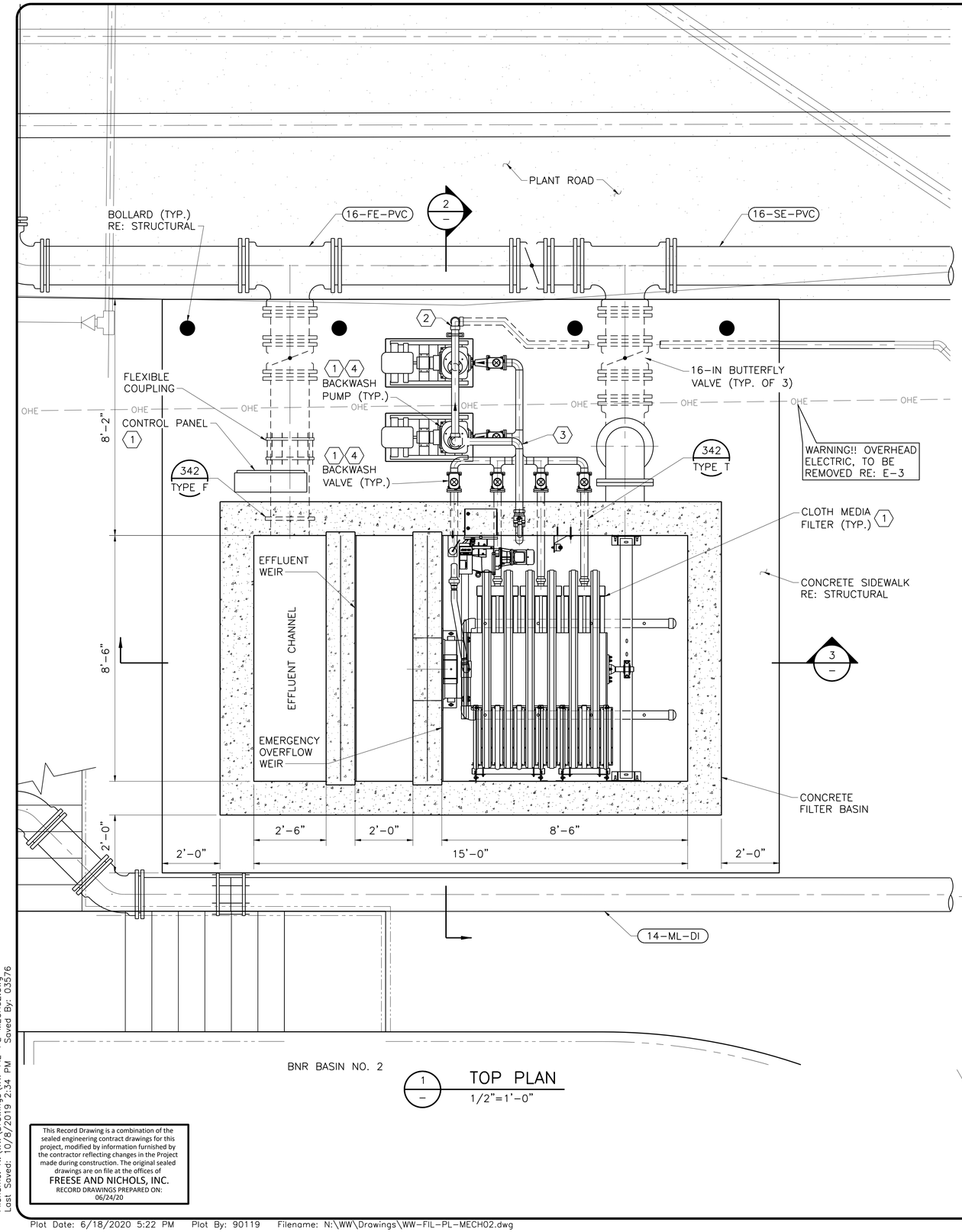

1 — TOP PLAN
1/2"=1'-0"

GENERAL NOTES:

1. ALL EQUIPMENT SHOWN ON THIS SHEET IS DESIGNED AROUND AQUA-AEROBIC SYSTEMS, INC. AQUADISK PILE CLOTH FILTER. CONTRACTOR IS RESPONSIBLE FOR COORDINATION WITH MANUFACTURER FOR A COMPLETE AND OPERABLE SYSTEM.
2. ALL PIPING SHALL BE STAINLESS STEEL, 316 SS, WITH EXCEPTIONS AS NOTED IN DRAWING.
3. ALL PIPING ABOVE GRADE AND MINIMUM WATER SURFACE ELEVATION SHALL BE INSULATED.
4. CONTRACTOR SHALL COORDINATE THE SCOPE OF BACKWASH PIPING AND EQUIPMENT SUPPLY WITH THE MANUFACTURER. THE CONTRACTOR SHALL BE RESPONSIBLE FOR SUPPLY OF A COMPLETE AND OPERABLE SYSTEM, INCLUSIVE OF ALL PIPING, VALVING, MECHANICAL AND ELECTRICAL EQUIPMENT WHETHER OR NOT SHOWN HEREIN.
5. ALL PIPES ABOVE GRADE AND ABOVE MINIMUM WATER SURFACE ELEVATION THAT ARE 10" AND SMALLER SHALL BE HEAT TRACED AND INSULATED. REFERENCE SPECIFICATIONS AND ELECTRICAL DRAWINGS FOR ADDITIONAL INFORMATION.

NOTES BY SYMBOL "(X)":

1. EQUIPMENT TO BE PROVIDED BY FILTER MANUFACTURER.
2. COORDINATE DISCHARGE BACKWASH PIPING SIZE WITH FILTER MANUFACTURER.
3. COORDINATE RETURN PIPING WITH FILTER MANUFACTURER.
4. CONTRACTORS SHALL SUPPLY INDUSTRIAL HEATING BLANKET FOR EACH PUMP, TO BE STORED BY THE OWNER. HEATING BLANKETS SHALL BE 120V, FREEZEPRO BY UNITHERM INTERNATIONAL, INC., OR APPROVED EQUAL, SIZED TO COMPLETELY COVER EACH PUMP.

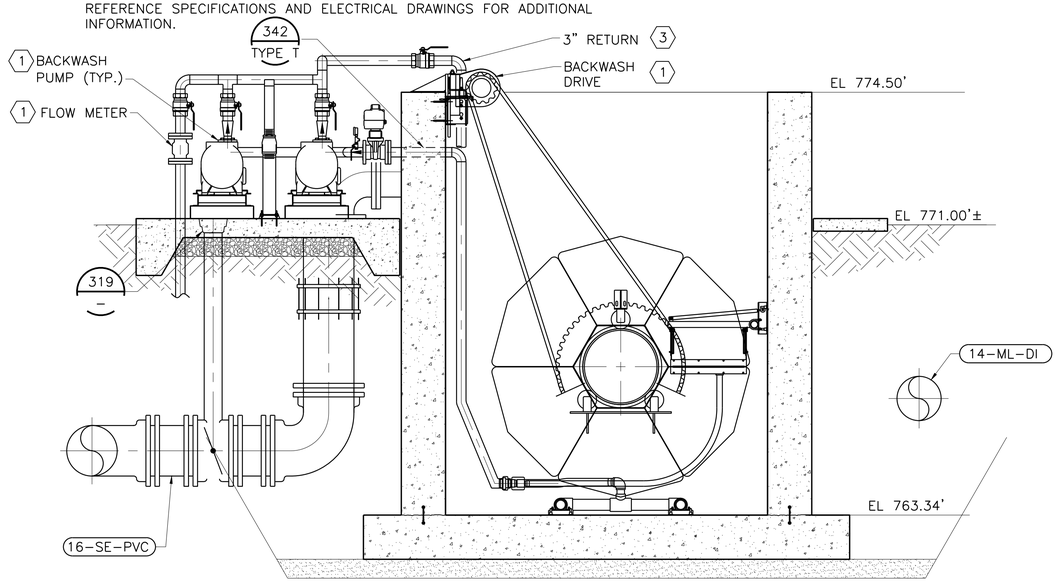

2 — SECTION
1/2"=1'-0"

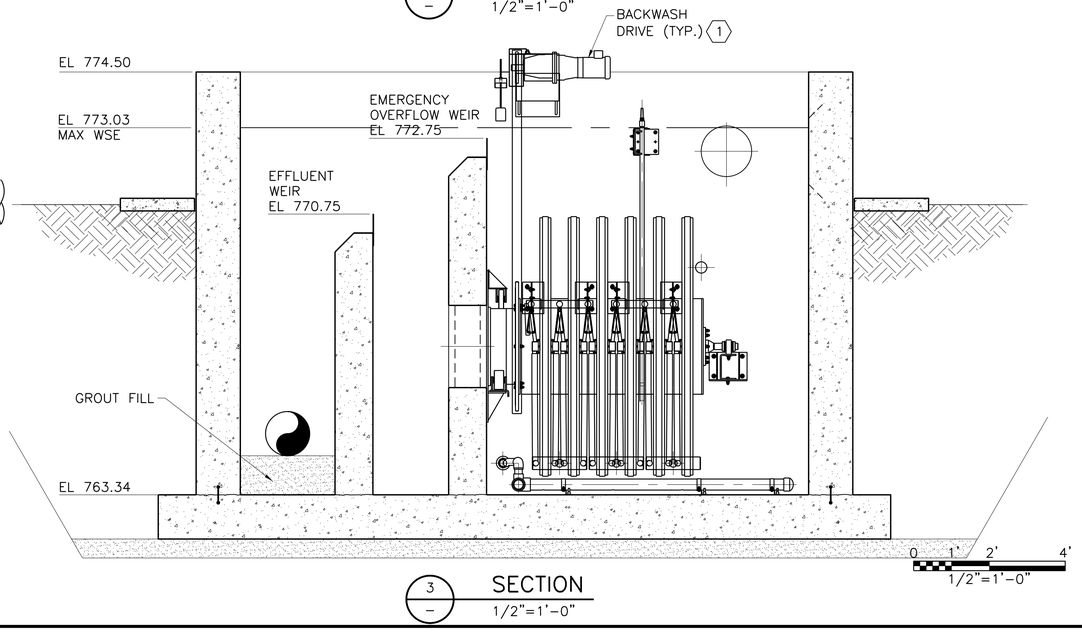

3 — SECTION
1/2"=1'-0"

This Record Drawing is a combination of the sealed engineering contract drawings for this project, modified by information furnished by the contractor reflecting changes in the Project made during construction. The original sealed drawings are on file at the offices of
FREESE AND NICHOLS, INC.
RECORD DRAWINGS PREPARED ON:
06/24/20

THE SEAL (NA) ORIGINALLY APPEARED ON THIS DOCUMENT WAS AUTHORIZED BY GERARD J. BOSCHER P.E.
ON BEHALF OF FREESE AND NICHOLS, INC.
ALTERATION OF A SEALED DOCUMENT WITHOUT PROPER AUTHORITY IS PROHIBITED AND MAY BE PUNISHABLE AS A CRIMINAL OFFENSE UNDER THE TEXAS ENGINEERING PRACTICE ACT

Freese and Nichols, Inc.
Texas Registered Engineering Firm F-2144

FREESE NICHOLS
4040 Broadway, Street, Suite 600
San Antonio, Texas 78209-6350
Phone - (210) 829-3000
Fax - (210) 829-3901
Web - www.freese.com

CITY OF CASTROVILLE
WWTP CAPACITY EXPANSION PROJECT
MECHANICAL
FILTER
TOP PLAN, AND SECTIONS II

NO.	ISSUE	BY	DATE
1	RECORD DRAWINGS	GB	06/24/20
0	ISSUED FOR CONSTRUCTION	GB	11/16/16

VERIFY SCALE Bar is one inch on original drawing. If not one inch on this sheet, adjust scale.
0 1"

F&N JOB NO. CVL14259
DATE 6/10/16
DESIGNED GB
DRAWN MAJ
CHECKED —
REVISED —
FILE NAME WW-FIL-PL-MECH02.dwg

SHEET F-M2
SEQ.

ACAD Rel: 21.0s (LMS Tech)
Filename: N:\WW\Drawings\WW-FIL-PL-MECH02.dwg
Last Saved: 10/8/2019 2:34 PM Saved By: 03576

Plot Date: 6/18/2020 5:22 PM Plot By: 90119 Filename: N:\WW\Drawings\WW-FIL-PL-MECH02.dwg

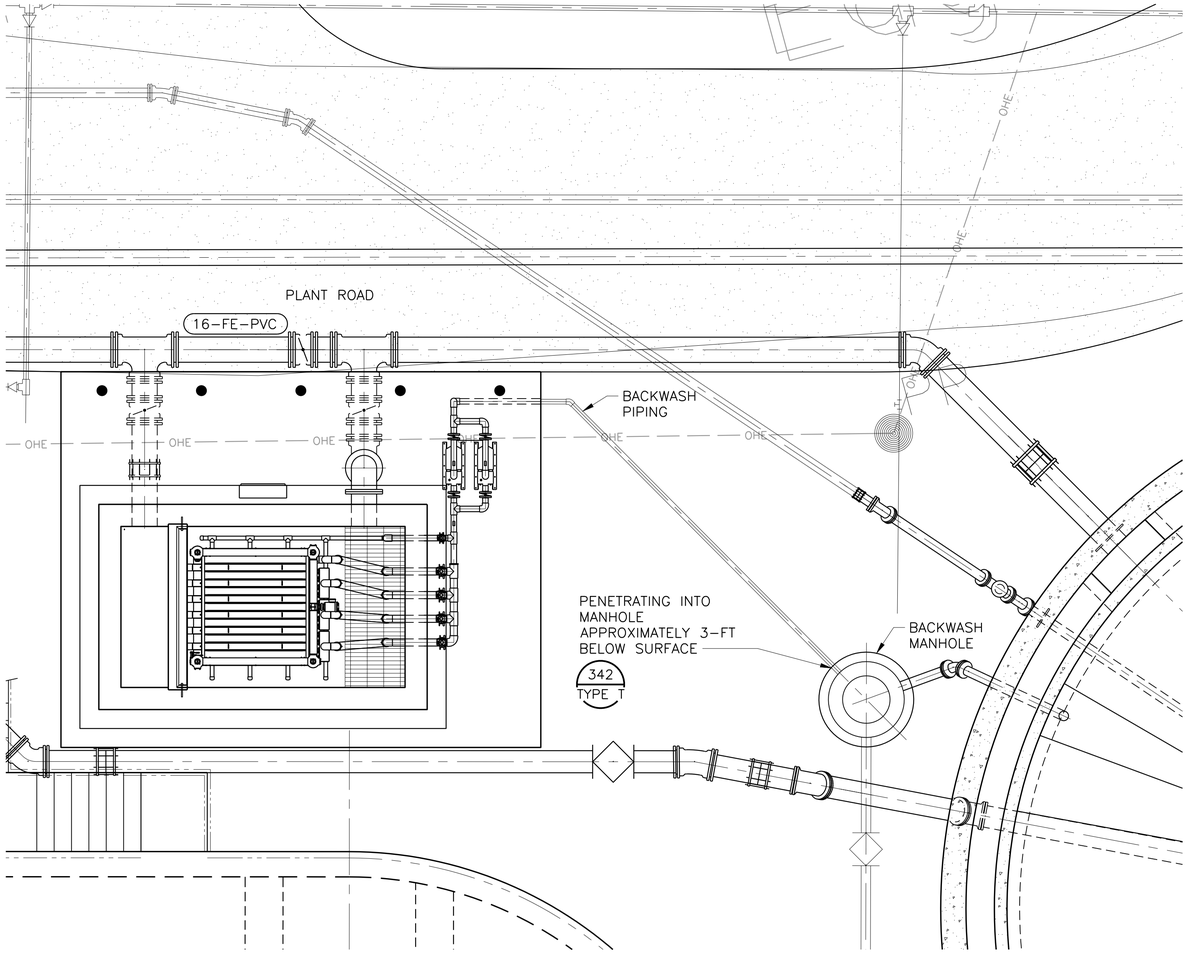

1 BACKWASH PIPING DETAIL
1/4"=1'-0"

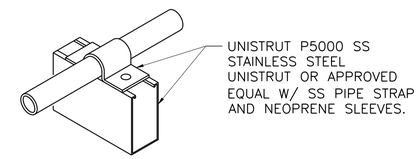

3 PIPE SUPPORT DETAIL
NTS

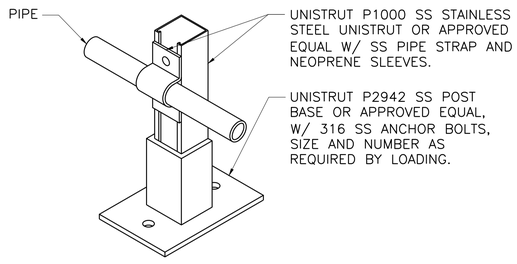

2 PIPE SUPPORT DETAIL
NTS

This Record Drawing is a combination of the sealed engineering contract drawings for this project, modified by information furnished by the contractor reflecting changes in the Project made during construction. The original sealed drawings are on file at the offices of
FREESE AND NICHOLS, INC.
RECORD DRAWINGS PREPARED ON:
06/24/20

0 1' 2' 4' 8'
1/4"=1'-0"

Freese and Nichols, Inc.
Texas Registered Engineering Firm F-2144

THE SEAL THAT ORIGINALLY APPEARED ON THIS DOCUMENT WAS AUTHORIZED BY GENNADY BOSCHER P.E. TEXAS NO. 94926 ON 06/10/2016. ALTERATION OF A SEALED DOCUMENT WITHOUT PROPER NOTIFICATION OF THE RESPONSIBLE ENGINEER IS AN OFFENSE UNDER THE TEXAS ENGINEERING PRACTICE ACT.

FREESE AND NICHOLS
4040 Broadway Street, Suite 600
San Antonio, Texas 78209-6350
Phone - (210) 298-3800
Fax - (210) 298-3801
Web - www.freese.com

CITY OF CASTROVILLE
WWTP CAPACITY EXPANSION PROJECT

MECHANICAL
FILTER DETAILS

NO.	ISSUE	BY	DATE
2	RECORD DRAWINGS	GB	06/24/20
1	ISSUED FOR CONSTRUCTION	GB	11/16/16

VERIFY SCALE Bar is one inch on original drawing. If not one inch on this sheet, adjust scale.

F&N JOB NO. CVL14259
DATE 6/10/16
DESIGNED GB
DRAWN MAJ
REVISED
CHECKED -
FILE NAME WW-FIL-DT-MISC01.dwg

SHEET F-M3
SEQ.

ACAD Rel: 21.0s (LMS Tech)
Filename: N:\WW\Drawings\WW-FIL-DT-MISC01.dwg
Last Saved: 10/8/2019 2:38 PM Saved By: 03576

Plot Date: 6/18/2020 5:24 PM Plot By: 90119 Filename: N:\WW\Drawings\WW-FIL-DT-MISC01.dwg

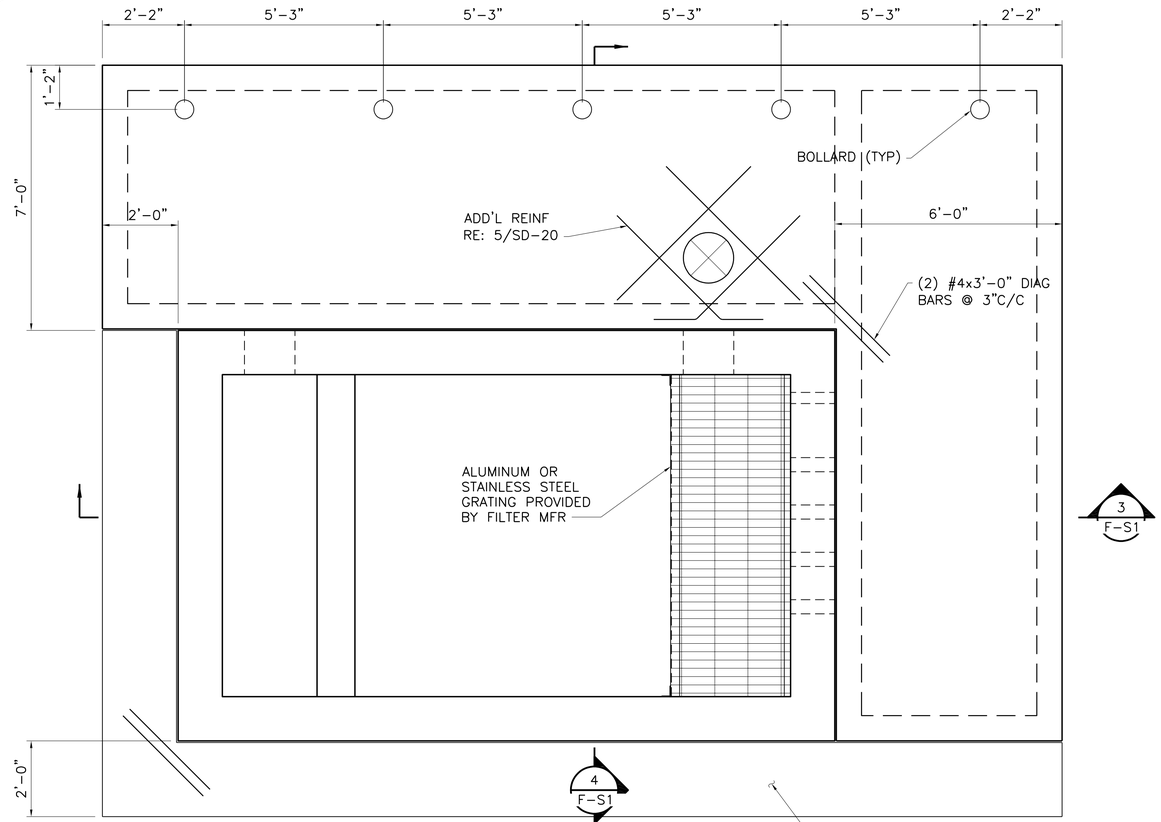

NORTH 1 — TOP PLAN
1/2"=1'-0"

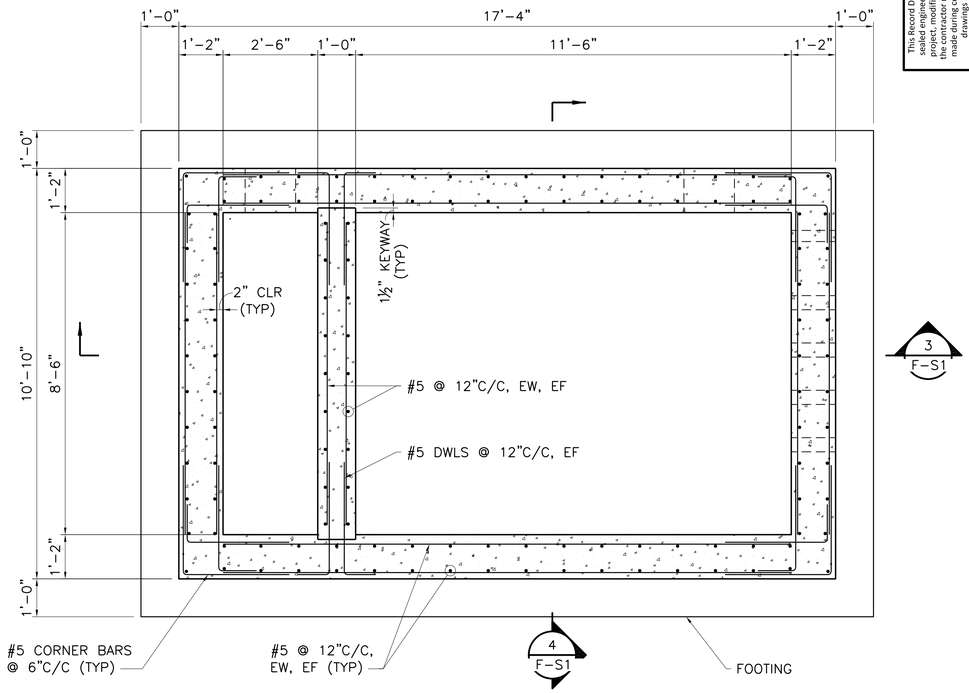

NORTH 2 — SECTIONAL PLAN
1/2"=1'-0"

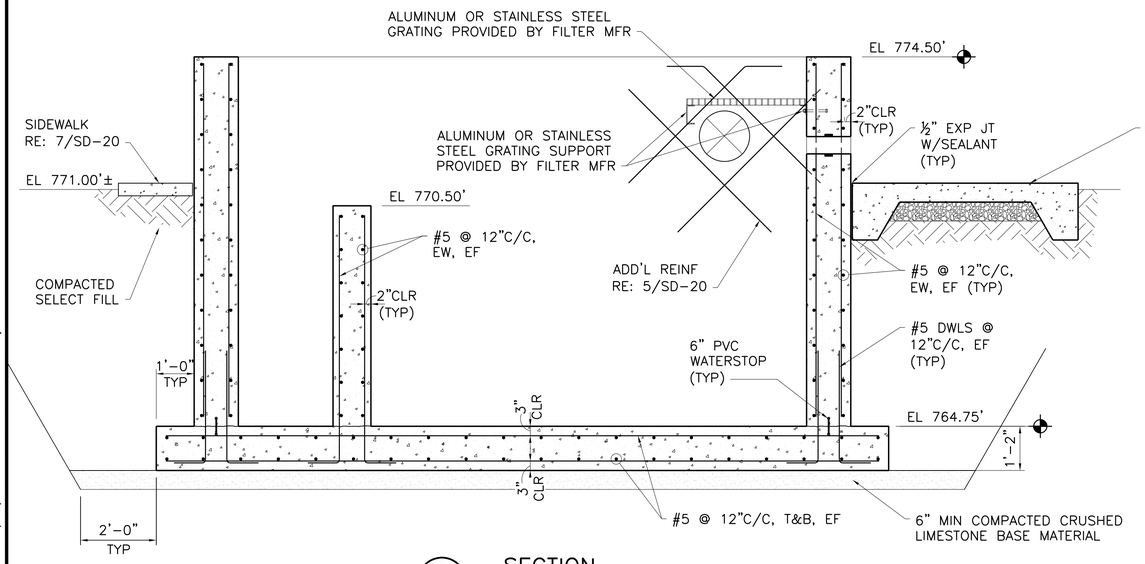

3 F-S1 — SECTION
1/2"=1'-0"

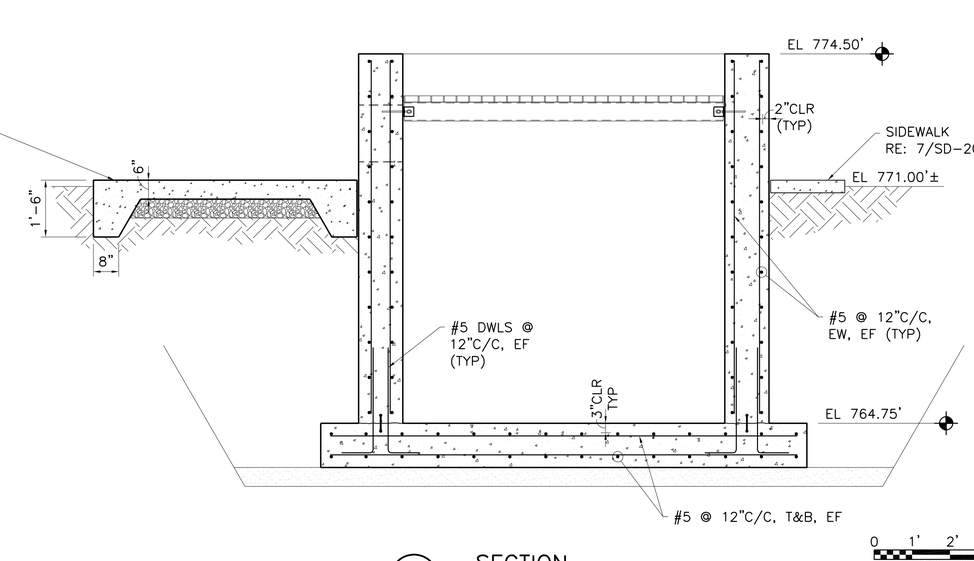

4 F-S1 — SECTION
1/2"=1'-0"

0 1' 2' 4'
1/2"=1'-0"

This Record Drawing is a combination of the sealed engineering contract drawings for this project, modified by information furnished by the contractor reflecting changes in the Project made during construction. The original sealed drawings are on file at the offices of
FREESE AND NICHOLS, INC.
RECORD DRAWINGS PREPARED ON:
6/24/2020

Freese and Nichols, Inc.
Texas Registered Engineering Firm F-2144

THE SEAL APPEARING ON THIS DOCUMENT WAS AUTHORIZED BY JOSHUA D. MORRIS, P.E. TEXAS NO. 122121 DATE: 06/24/2020
IT IS A VIOLATION OF THE PROFESSIONAL ENGINEERING LAW FOR ANY PERSON, UNLESS ACTING UNDER THE DIRECTION OF THE RESPONSIBLE ENGINEER, TO ALTER THIS DOCUMENT IN ANY WAY. ANY ALTERATION OF THIS DOCUMENT BY ANY PERSON OTHER THAN THE RESPONSIBLE ENGINEER IS DONE WITHOUT PROPER AUTHORIZATION AND WITHOUT ANY LIABILITY TO THE RESPONSIBLE ENGINEER. IT IS A VIOLATION OF THE TEXAS ENGINEERING PRACTICE ACT.

FREESE NICHOLS
4040 Broadway Street, Suite 600
San Antonio, Texas 78209-6350
Phone: (210) 826-3800
Fax: (210) 298-3801
Web - www.freese.com

CITY OF CASTROVILLE

WWTP CAPACITY EXPANSION PROJECT

STRUCTURAL
FILTERS
PLAN AND SECTIONS

NO.	ISSUE	BY	DATE
1	RECORD DRAWING	MRR	06/24/20
0	ISSUED FOR CONSTRUCTION	MRR	11/16/16

FAN JOB NO. CVL14259
DATE 6/10/16
DESIGNED MRR
DRAWN JLM
CHECKED AD
FILE NAME ST-FLA-PS-FNDN.dwg

VERIFY SCALE Bar is one inch on original drawing. If not one inch on this sheet, adjust scale.
0 1"

SHEET
F-S1
SEQ.

ACAD Rel: 21.0s (LMS Tech)
Filename: N:\ST\ST-FLA-PS-FNDN.dwg
Last Saved: 6/18/2020 10:50 AM Saved By: 02198

Plot Date: 6/18/2020 11:17 AM Plot By: 02198 Filename: N:\ST\ST-FLA-PS-FNDN.dwg

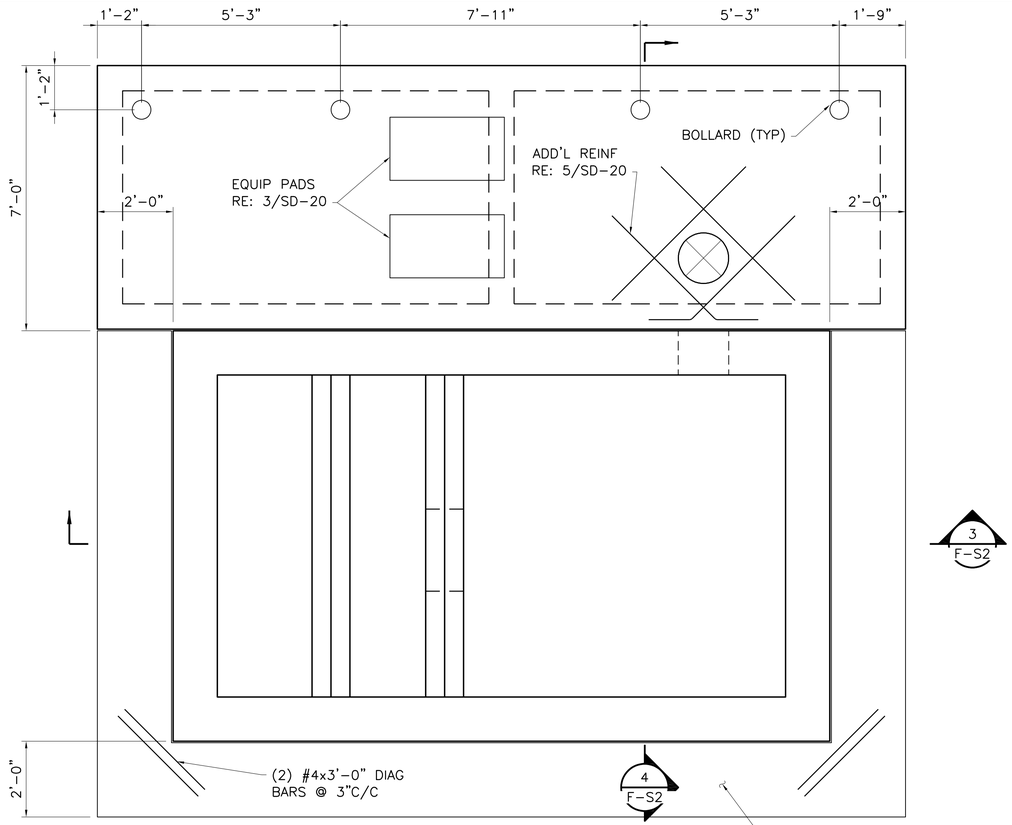

NORTH 1 — TOP PLAN
1/2"=1'-0"

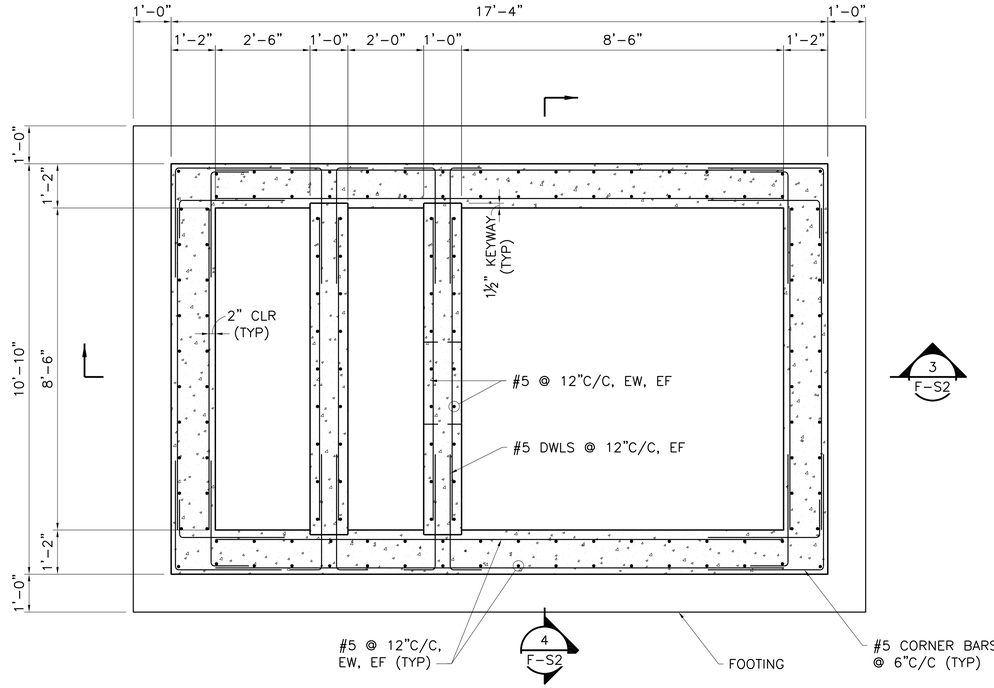

NORTH 2 — SECTIONAL PLAN
1/2"=1'-0"

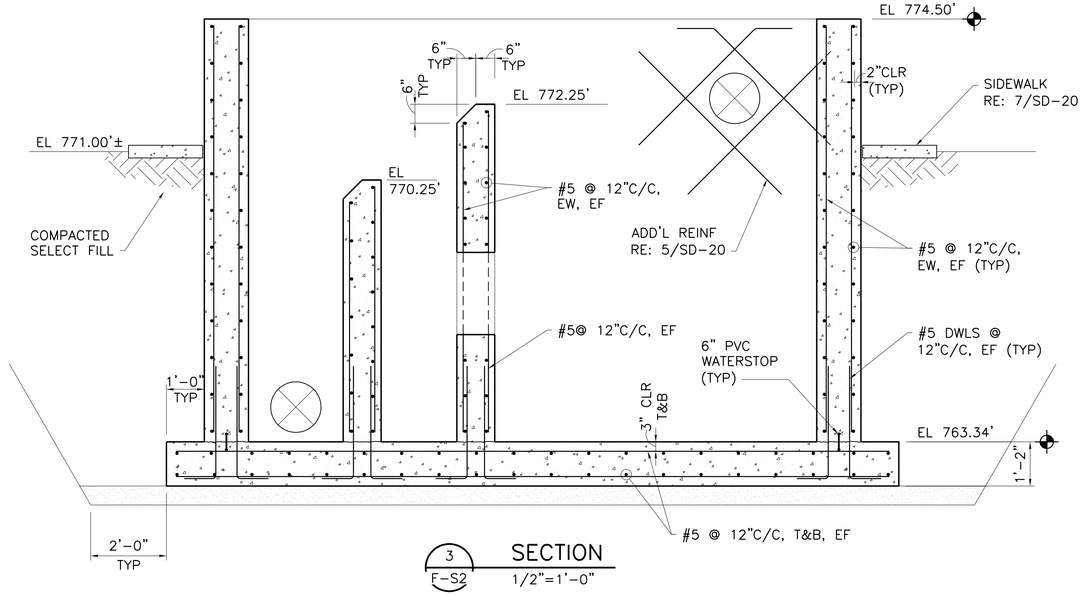

3 F-S2 SECTION
1/2"=1'-0"

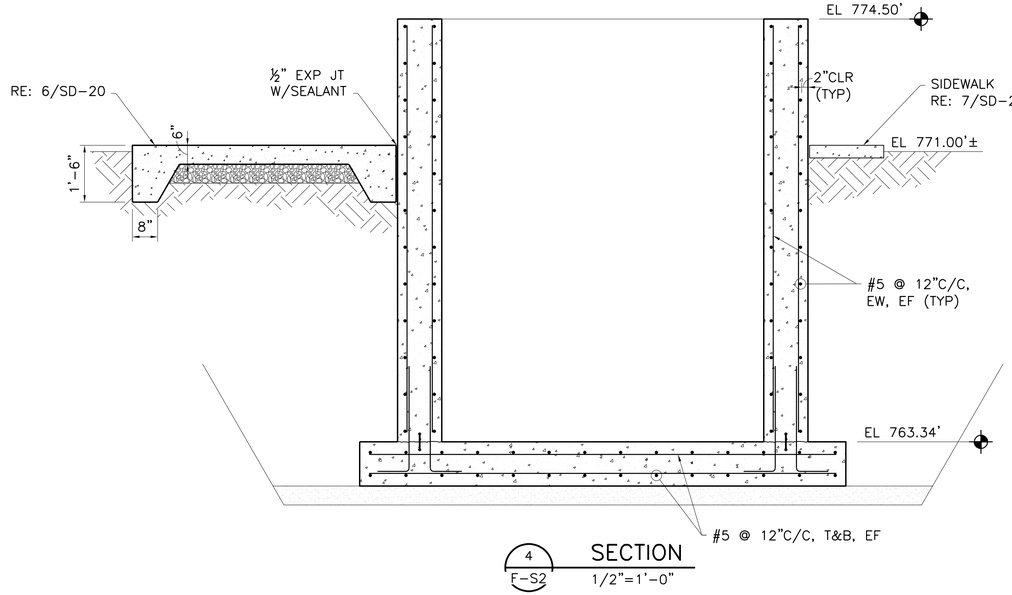

4 F-S2 SECTION
1/2"=1'-0"

0 1' 2' 4'
1/2"=1'-0"

This Record Drawing is a combination of the sealed engineering contract drawings for this project, modified by information furnished by the contractor reflecting changes in the Project made during construction. The original sealed drawings are on file at the offices of
FREESE AND NICHOLS, INC.
RECORD DRAWINGS PREPARED ON:
6/24/2020

Freese and Nichols, Inc.
Texas Registered Engineering Firm F-2144

THE SEAL APPEARING ON THIS DOCUMENT WAS AUTHORIZED BY JUSTIN L. MCCLUNG, P.E.
TEXAS NO. 122201 DATE: 6/24/2020
IT IS NOT TO BE USED FOR BIDDING, PERMIT, OR CONSTRUCTION PURPOSES. THE PRINTED COPIES OF THIS DOCUMENT ARE NOT CONSIDERED SIGNED AND SEALED AND THE ELECTRONIC FILES DO NOT INCLUDE THE ELECTRONIC SEAL AS DEFINED BY THE TEXAS ENGINEERING PRACTICE ACT.

FREESE NICHOLS
4040 Broadway Street, Suite 600
San Antonio, Texas 78209-6350
Phone (210) 298-8300
Fax (210) 298-3801
Web - www.freese.com

CITY OF CASTROVILLE

WWTP CAPACITY EXPANSION PROJECT

STRUCTURAL
FILTERS
PLAN AND SECTIONS

NO.	ISSUE	BY	DATE
1	RECORD DRAWING	MRR	06/24/20
0	ISSUED FOR CONSTRUCTION	MRR	11/16/16

VERIFY SCALE Bar is one inch on original drawing. If not one inch on this sheet, adjust scale.
0 1"

F&N JOB NO. CVL14259
DATE 6/10/16
DESIGNED MRR
DRAWN JLM
CHECKED AD
FILE NAME ST-FLB-PS-FNDN.dwg

SHEET F-S2
SEQ.

ACAD Rel: 21.0s (LMS Tech)
Filename: N:\ST\ST-FLB-PS-FNDN.dwg
Last Saved: 6/18/2020 10:53 AM Saved By: 02198

Plot Date: 6/18/2020 11:17 AM Plot By: 02198 Filename: N:\ST\ST-FLB-PS-FNDN.dwg



1 EXISTING PIPING AND BAFFLES
N.T.S.



2 EFFLUENT BOX WALL AND EXISTING WEIRS AND BAFFLING
N.T.S.

NOTE:

1. ALL SETTLED SOLIDS IN BASIN SHALL BE REMOVED AND DISPOSED OF AT LANDFILL ACCORDING TO ALL APPLICABLE REGULATIONS.

LEGEND:

STRUCTURE COMPONENTS AND EQUIPMENT TO BE REMOVED

NOTES BY '⟨X⟩' SYMBOL:

1. PLUG AND CONCRETE CAP EXISTING PIPE OPENING.
2. REMOVE STEEL PLATE AND DEMOLISH CONCRETE WALL AT EFFLUENT BOX TO EL. 767.00' WITH CLEAR OPENING OF 4'-6 1/2".
3. DEMOLISH AND REMOVE METAL BAFFLE AND SUPPORTS AROUND ENTIRE BASIN.
4. DEMOLISH AND REMOVE EXISTING INFLUENT PIPE AND SUPPORTS. PLUG PIPE OPENING AT BASIN WALL.
5. SAW CUT CONCRETE STOP PLATE SUPPORTS TO BE WITHIN 1" FLUSH WITH EXISTING WALLS.
6. REMOVE EXISTING SLUDGE PUMP AND PIPING AND PLUG AND CAP BOX W/ CONCRETE FILL.
7. EXISTING WALKWAY BRIDGE STRUCTURE AND ANY REMAINING CLARIFIER EQUIPMENT TO BE REMOVED AND DISPOSED OF OFF-SITE.
8. REMOVE EXISTING PVC EFFLUENT PIPE.



3 EFFLUENT BOX WALL DEMOLITION
N.T.S.

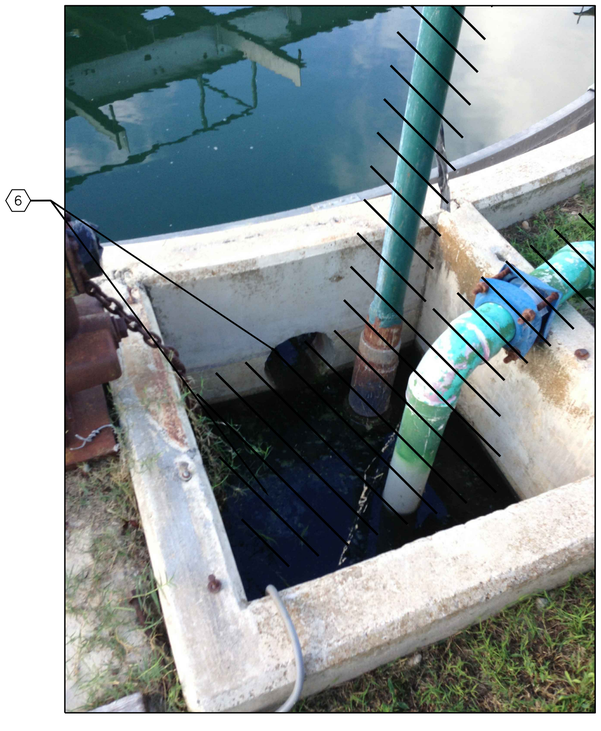

4 SLUDGE BOX PIPING AND PUMP DEMOLITION
N.T.S.

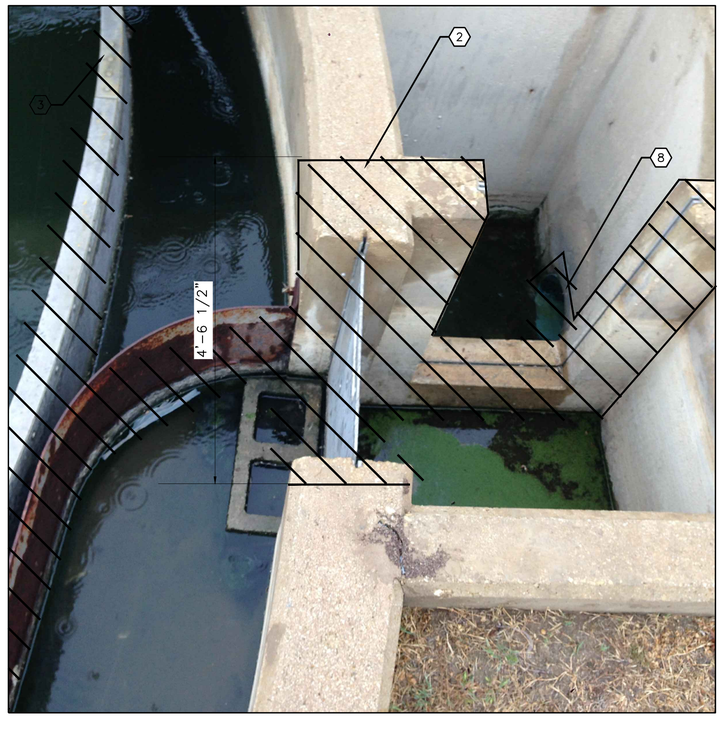

5 EFFLUENT BOX PIPING
N.T.S.

This Record Drawing is a combination of the sealed engineering contract drawings for this project, modified by information furnished by the contractor reflecting changes in the Project made during construction. The original sealed drawings are on file at the offices of
FREESE AND NICHOLS, INC.
RECORD DRAWINGS PREPARED ON: 06/24/20

Freese and Nichols, Inc.
Texas Registered Engineering Firm F-2144

THE SEAL THAT ORIGINALLY APPEARED ON THIS DOCUMENT WAS AUTHORIZED BY CORT C. GEE, P.E. TEXAS NO. 118865 ON 08/10/2016. ALTERATION OF A SEALED DOCUMENT WITHOUT PROPER NOTIFICATION OF THE RESPONSIBLE ENGINEER IS AN OFFENSE UNDER THE TEXAS ENGINEERING PRACTICE ACT.

FREESE AND NICHOLS
4040 Broadway Street, Suite 600
San Antonio, Texas 78209-6350
Phone - (210) 298-3800
Fax - (210) 298-3801
Web - www.freese.com

CITY OF CASTROVILLE
WWTP CAPACITY EXPANSION PROJECT
MECHANICAL
CHLORINE DISINFECTION – CONTACT BASIN DEMOLITION PLAN

NO.	ISSUE	BY	DATE
2	RECORD DRAWINGS	CCG	06/24/20
1	ISSUED FOR CONSTRUCTION	CCG	11/16/16

F&N JOB NO. CVL14259
DATE 6/10/16
DESIGNED CCG
DRAWN KV
REVISED
CHECKED TWS
FILE NAME WW-CCB-PL-DEM001.dwg

VERIFY SCALE 0 1
Bar is one inch on original drawing. If not one inch on this sheet, adjust scale.

SHEET CD-M1
SEQ.

ACAD Rel: 21.0s (LMS Tech)
Filename: N:\WW\Drawings\WW-CCB-PL-DEM001.dwg
Last Saved: 10/8/2019 2:46 PM Saved By: 03576

Plot Date: 6/18/2020 5:25 PM Plot By: 90119 Filename: N:\WW\Drawings\WW-CCB-PL-DEM001.dwg

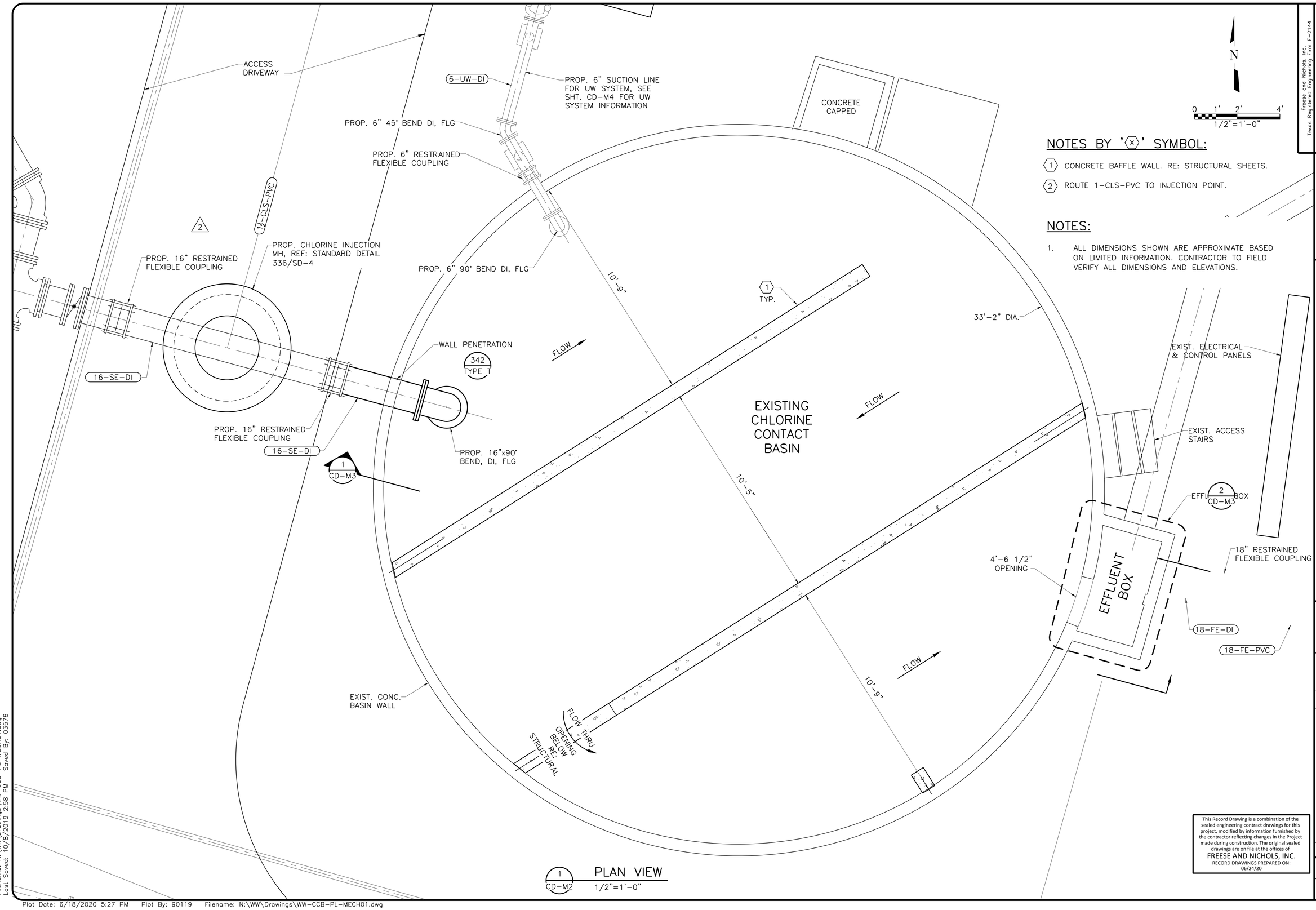

NOTES BY '(X)' SYMBOL:

(1) CONCRETE BAFFLE WALL. RE: STRUCTURAL SHEETS.

(2) ROUTE 1-CLS-PVC TO INJECTION POINT.

NOTES:

1. ALL DIMENSIONS SHOWN ARE APPROXIMATE BASED ON LIMITED INFORMATION. CONTRACTOR TO FIELD VERIFY ALL DIMENSIONS AND ELEVATIONS.

1 CD-M2 PLAN VIEW 1/2"=1'-0"

This Record Drawing is a combination of the sealed engineering contract drawings for this project, modified by information furnished by the contractor reflecting changes in the Project made during construction. The original sealed drawings are on file at the offices of FREESE AND NICHOLS, INC. RECORD DRAWINGS PREPARED ON: 06/24/20

Freese and Nichols, Inc.
Texas Registered Engineering Firm F-2144

THE SEAL THAT ORIGINALLY APPEARED ON THIS DOCUMENT WAS AUTHORIZED BY CORY C. GEE, P.E. TEXAS NO. 118865 ON 08/10/2016. ALTERATION OF A SEALED DOCUMENT WITHOUT PROPER NOTIFICATION OF THE RESPONSIBLE ENGINEER IS AN OFFENSE UNDER THE TEXAS ENGINEERING PRACTICE ACT.

FREESE AND NICHOLS
4040 Broadway Street, Suite 600
San Antonio, Texas 78209-6350
Phone - (210) 298-3800
Fax - (210) 298-3801
Web - www.freese.com

CITY OF CASTROVILLE
WWTP CAPACITY EXPANSION PROJECT
MECHANICAL
CHLORINE DISINFECTION - CONTACT BASIN
PLAN VIEW

NO.	ISSUE	BY	DATE
3	RECORD DRAWINGS	CCG	06/24/20
2	RFI - 007	CCG	1/25/17
1	ISSUED FOR CONSTRUCTION	CCG	11/16/16

F&N JOB NO. CVL14259
DATE 6/10/16
DESIGNED CCG
DRAWN KV
REVISED
CHECKED TWS
FILE NAME WW-CCB-PL-MECH01.dwg

VERIFY SCALE Bar is one inch on original drawing. If not one inch on this sheet, adjust scale.

SHEET CD-M2
SEQ.

ACAD Rel: 21.0s (LMS Tech)
Filename: N:\WW\Drawings\WW-CCB-PL-MECH01.dwg
Last Saved: 10/8/2019 2:58 PM Saved By: 03576

Plot Date: 6/18/2020 5:27 PM Plot By: 90119 Filename: N:\WW\Drawings\WW-CCB-PL-MECH01.dwg

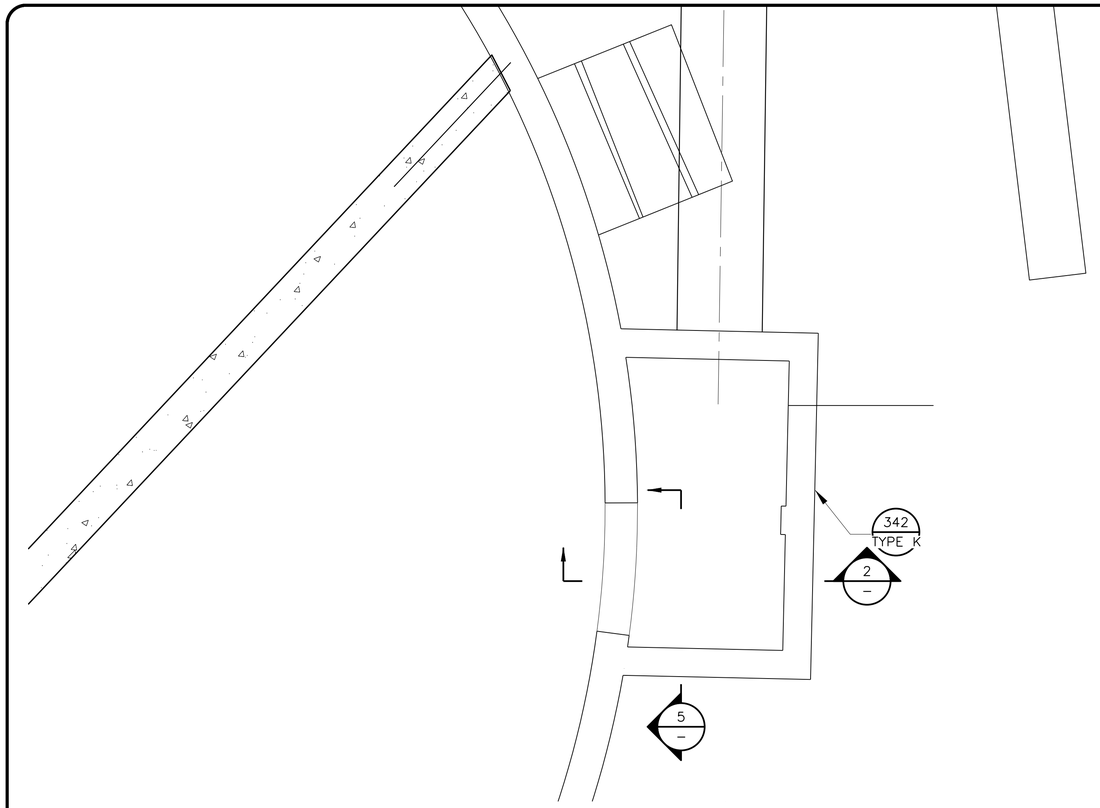

2 EFFLUENT BOX PLAN
CD-M3 3/4"=1'-0"

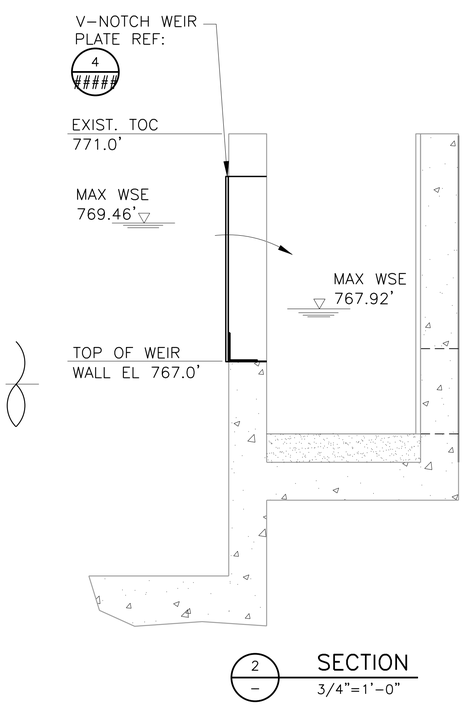

2 SECTION
3/4"=1'-0"

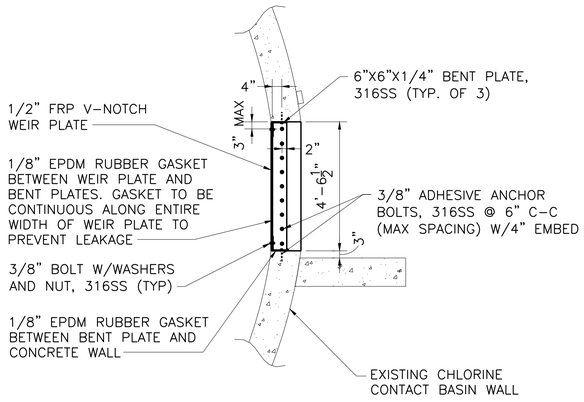

NOTES:

1. 6"x6"x1/4" BENT PLATES TO BE FIELD MODIFIED TO PROVIDE A STRAIGHT, FLUSH SURFACE FOR MOUNTING WEIR PLATE.

4 V-NOTCH WEIR PLAN
3/8"=1'-0"

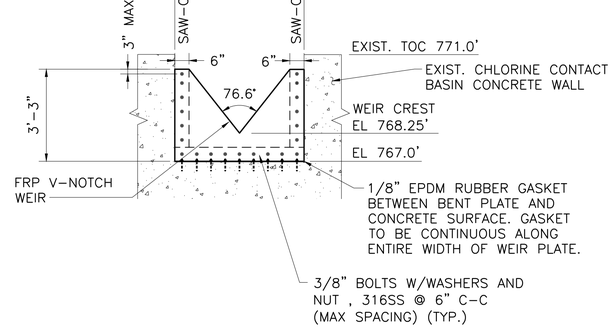

5 V-NOTCH WEIR SECTION
3/8"=1'-0"

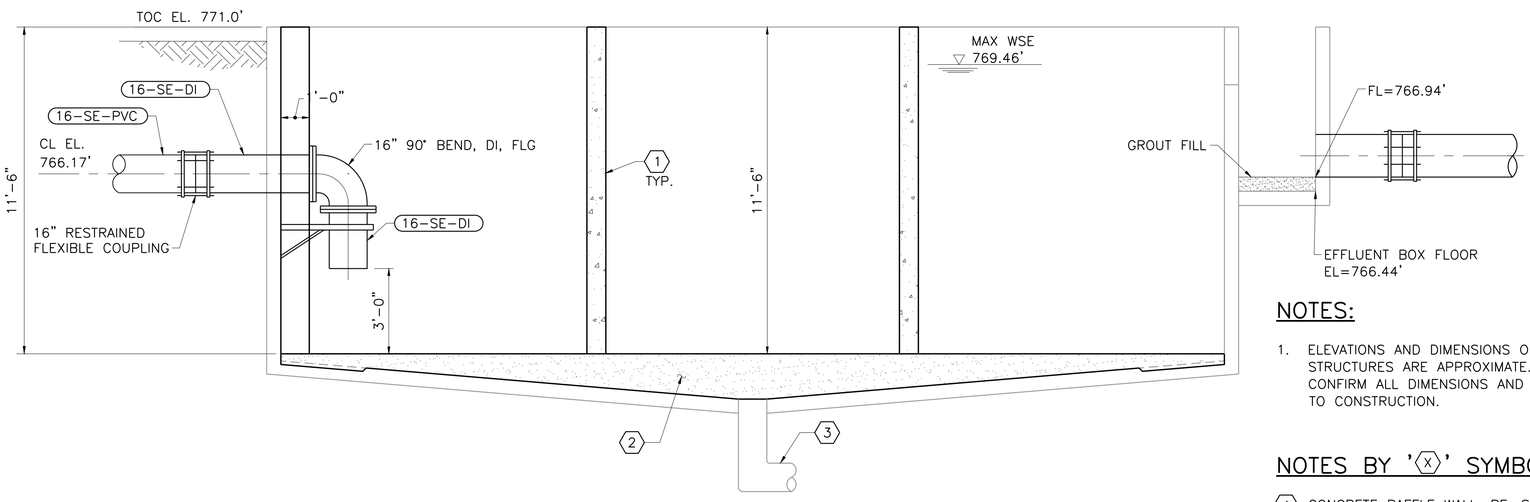

1 SECTION
3/8"=1'-0"

NOTES:

1. ELEVATIONS AND DIMENSIONS OF EXISTING STRUCTURES ARE APPROXIMATE. CONTRACTOR TO CONFIRM ALL DIMENSIONS AND ELEVATIONS PRIOR TO CONSTRUCTION.

NOTES BY '(X)' SYMBOL:

(1) CONCRETE BAFFLE WALL, RE: STRUCTURAL SHEETS.

(2) INSTALL CONCRETE FILL ON BASIN FLOOR TO AN ELEVATION OF 759.5' REF: STRUCTURAL SHEETS.

(3) PLUG AND CAP EXISTING SLUDGE PIPING.

This Record Drawing is a combination of the sealed engineering contract drawings for this project, modified by information furnished by the contractor reflecting changes in the Project made during construction. The original sealed drawings are on file at the offices of
FREESE AND NICHOLS, INC.
RECORD DRAWINGS PREPARED ON:
06/24/20

Freese and Nichols, Inc.
Texas Registered Engineering Firm F-2144

THE SEAL (IM) ORIGINALLY APPEARED ON THIS DOCUMENT WAS AUTHORIZED BY CHRIS C. GEE, P.E.
ALTERATION OF A SEALED DOCUMENT WITHOUT PROPER AUTHORIZATION AND SPECIFIC DESCRIPTION OF REVISIONS IS AN OFFENSE UNDER THE TEXAS ENGINEERING PRACTICE ACT

FREESE NICHOLS
4040 Broadway Street, Suite 600
San Antonio, Texas 78209-6350
Phone - (210) 826-3000
Fax - (210) 826-3901
Web - www.freese.com

CITY OF CASTROVILLE

WWTP CAPACITY EXPANSION PROJECT

MECHANICAL

CHLORINE DISINFECTION - CONTACT BASIN SECTION AND EFFLUENT BOX DETAILS

F&N JOB NO. CVL14259
DATE 6/10/16
DESIGNED CCG
DRAWN DDH
CHECKED TWS
FILE NAME WW-CCB-DT-MECH01.dwg

NO.	ISSUE	BY	DATE
	RECORD DRAWINGS	CCG	06/24/20
1	ISSUED FOR CONSTRUCTION	CCG	11/16/16

VERIFY SCALE Bar is one inch on original drawing. If not one inch on this sheet, adjust scale.
0" 1"

SHEET CD-M3
SEQ.

ACAD Rel: 21.0s (LMS Tech)
Filename: N:\WW\Drawings\WW-CCB-DT-MECH01.dwg
Last Saved: 10/8/2019 3:00 PM Saved By: 03576

Plot Date: 6/18/2020 5:30 PM Plot By: 90119 Filename: N:\WW\Drawings\WW-CCB-DT-MECH01.dwg

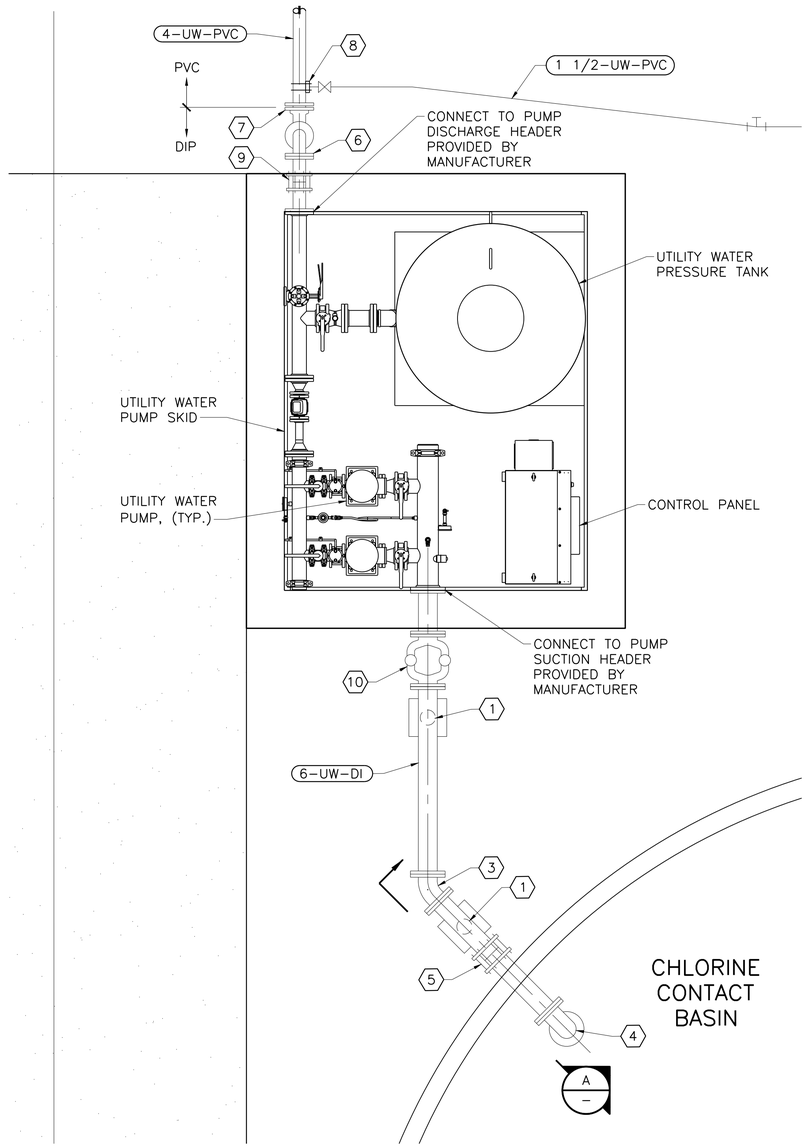

1 – UW SYSTEM PLAN
3/8"=1'-0"

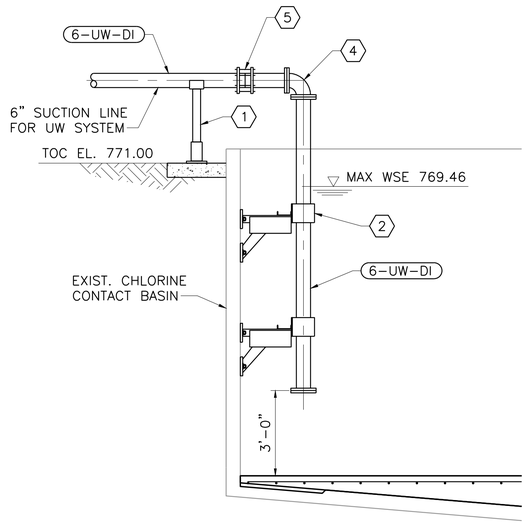

A – UW SUCTION LINE SECTION
3/8"=1'-0"

NOTES BY '(X)' SYMBOL:

(1) PIPE SUPPORT (TYPE F), SEE DTL. 340

(2) ATTACH TO WALL WITH S.S. PIPE STRAPS, AT 4' MAX. SPACING, PER STD. DTL. 340, TYPE I

(3) 6" 45° BEND, DI, FLG

(4) 6" 90° BEND, DI, FLG

(5) 6" RESTRAINED FLEXIBLE COUPLING ADAPTER

(6) 4" 90° BEND, DI, FLG

(7) 4" 90° BEND, DI, MJ

(8) 1 1/2" TAPPING SADDLE & ISOLATION VALVE

(9) 4" RESTRAINED FLEXIBLE COUPLING ADAPTER

1 (10) 6" FLANGED SCH 80 PVC DUPLEX BASKET STRAINER AS MANUFACTURED BY HAYWARD, SPEARS, OR APPROVED EQUAL. SCREEN SHALL BE STAINLESS STEEL WITH ¼" OPENINGS AND FKM SEALS. PROVIDE ADDITIONAL PIPING, APPURTENANCES, AND SUPPORTS AS NEEDED FOR INSTALLATION PER MANUFACTURER'S RECOMMENDATION.

NOTES:

1. ALL EQUIPMENT SHOWN ON THIS SHEET IS DESIGNED AROUND SPECIFIC MANUFACTURERS. IF ANOTHER APPROVED MANUFACTURER IS SELECTED, THE CONTRACTOR SHALL MODIFY THE DESIGN/LAYOUT PER SELECTED MANUFACTURER'S RECOMMENDATIONS AT NO ADDITIONAL COST TO THE OWNER.
2. PLANT SERVICE WATER SYSTEM SHALL BE AS SPECIFIED IN SECTION 33 11 16.

This Record Drawing is a combination of the sealed engineering contract drawings for this project, modified by information furnished by the contractor reflecting changes in the Project made during construction. The original sealed drawings are on file at the offices of FREESE AND NICHOLS, INC.
RECORD DRAWINGS PREPARED ON: 06/24/20

Freese and Nichols, Inc.
Texas Registered Engineering Firm F-2144

THE SEAL THAT APPEARS ON THIS DOCUMENT WAS AUTHORIZED BY JOSEPH C. FREEMAN, P.E. TEXAS NO. 119267 ON 06/10/16
IT IS A VIOLATION OF THE TEXAS ENGINEERING PRACTICE ACT FOR ANY PERSON TO ALTER THIS DOCUMENT IN ANY WAY WITHOUT NOTIFICATION OF THE RESPONSIBLE ENGINEER IS AN OFFENSE UNDER THE TEXAS ENGINEERING PRACTICE ACT

FREESE AND NICHOLS
4040 Broadway Street, Suite 600
San Antonio, Texas 78209-6350
Phone: (210) 829-3000
Fax: (210) 826-2901
Web – www.freese.com

CITY OF CASTROVILLE

WWTP CAPACITY EXPANSION PROJECT

MECHANICAL

CHLORINE DISINFECTION – UW SYSTEM PLAN AND ELEVATION

NO.	ISSUE	BY	DATE
2	RECORD DRAWINGS	SDC	06/24/20
1	ISSUED FOR CONSTRUCTION	CCG	11/16/16
1	ADDENDUM NO. 1	SDC	7/01/16

VERIFY SCALE Bar is one inch on original drawing. If not one inch on this sheet, adjust scale.
0 1"

FAN JOB NO.	CVL14259
DATE	6/10/16
DESIGNED	CCG
DRAWN	DDH
REVISED	-
CHECKED	TWS
FILE NAME	WW-UW-PL-MECH01.dwg

SHEET CD-M4
SEQ.

ACAD Rel: 21.0s (LMS Tech)
Filename: N:\WW\Drawings\WW-UW-PL-MECH01.dwg
Last Saved: 10/8/2019 3:49 PM Saved By: 03576
Plot Date: 6/18/2020 5:32 PM Plot By: 90119 Filename: N:\WW\Drawings\WW-UW-PL-MECH01.dwg

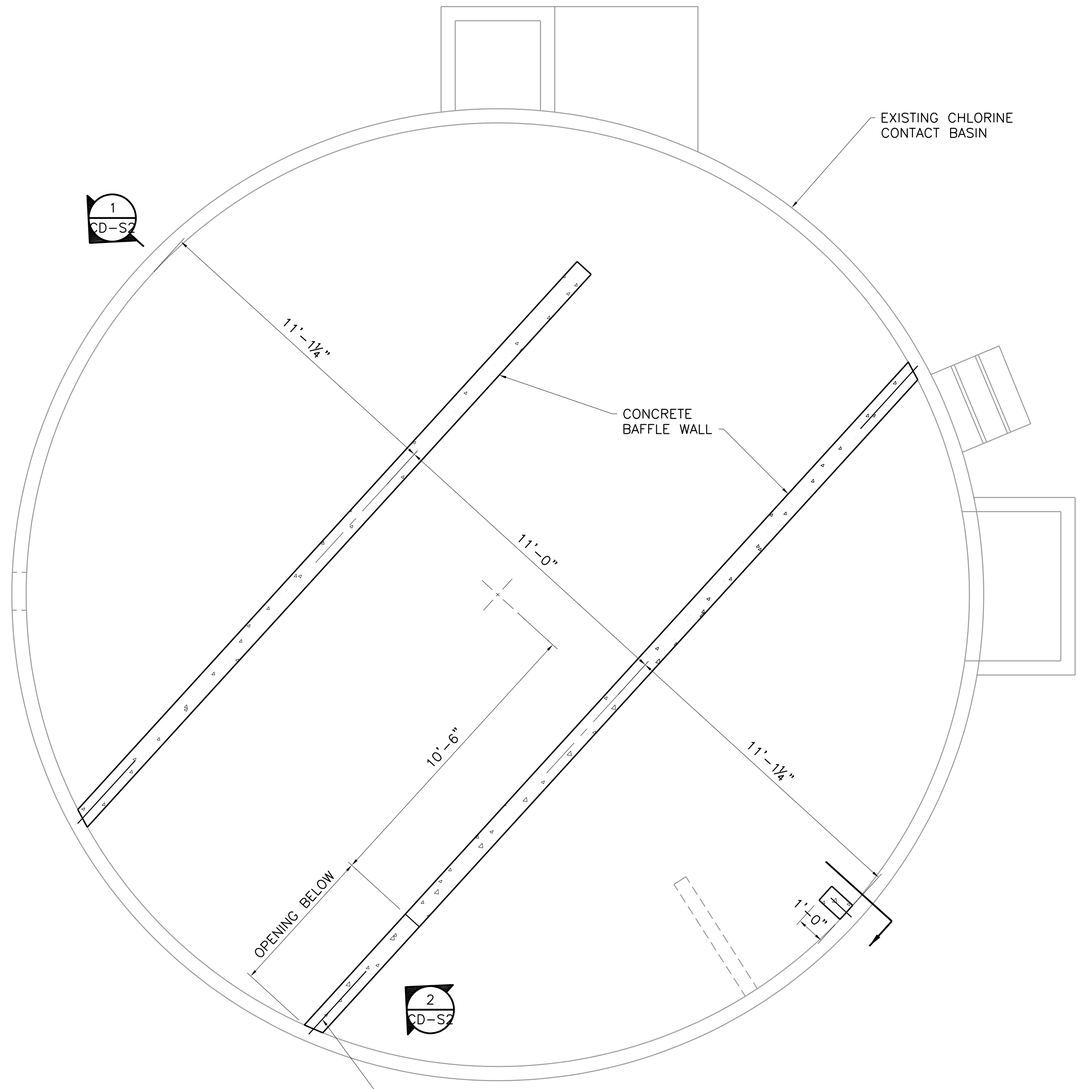

NORTH

1 — PLAN
3/8"=1'-0"

NOTES:
1. ALL DIMENSIONS SHOWN ARE APPROXIMATE BASED ON LIMITED INFORMATION. CONTRACTOR TO FIELD VERIFY EXISTING CONDITIONS AND ALL DIMENSIONS AND ELEVATIONS.

0 1' 2' 4'
3/8"=1'-0

This Record Drawing is a combination of the sealed engineering contract drawings for this project, modified by information furnished by the contractor reflecting changes in the Project made during construction. The original sealed drawings are on file at the offices of
FREESE AND NICHOLS, INC.
RECORD DRAWINGS PREPARED ON:
6/24/2020

Freese and Nichols, Inc.
Texas Registered Engineering Firm F-2144

THE SEAL APPEARING ON THIS DOCUMENT WAS AUTHORIZED BY MICHAEL RAY ROBERTSON, P.E. TEXAS NO. 92201 ON 06/10/2016. ALTERATION OF A SEALED DOCUMENT WITHOUT PROPER NOTIFICATION OF THE RESPONSIBLE ENGINEER IS A VIOLATION OF THE TEXAS ENGINEERING PRACTICE ACT.

FREESE AND NICHOLS
4040 Broadway Street, Suite 600
San Antonio, Texas 78209-6350
Phone - (210) 298-3800
Fax - (210) 298-3801
Web - www.freese.com

CITY OF CASTROVILLE
WWTP CAPACITY EXPANSION PROJECT

STRUCTURAL
CHLORINE DISINFECTION
CHLORINE CONTACT BASIN PLAN

NO.	ISSUE	BY	DATE
2	RECORD DRAWING	MRR	06/24/20
1	ISSUED FOR CONSTRUCTION	MRR	11/16/16

VERIFY SCALE 0 1
Bar is one inch on original drawing. If not one inch on this sheet, adjust scale.

F&N JOB NO. CVL14259
DATE 6/10/16
DESIGNED MRR
DRAWN JLM
REVISED
CHECKED AD
FILE NAME ST-CCB-PL-CONC01.dwg

SHEET CD-S1
SEQ.

ACAD Rel: 21.0s (LMS Tech)
Filename: N:\ST\ST-CCB-PL-CONC01.dwg
Last Saved: 6/18/2020 10:55 AM Saved By: 02198

Plot Date: 6/18/2020 11:17 AM Plot By: 02198 Filename: N:\ST\ST-CCB-PL-CONC01.dwg

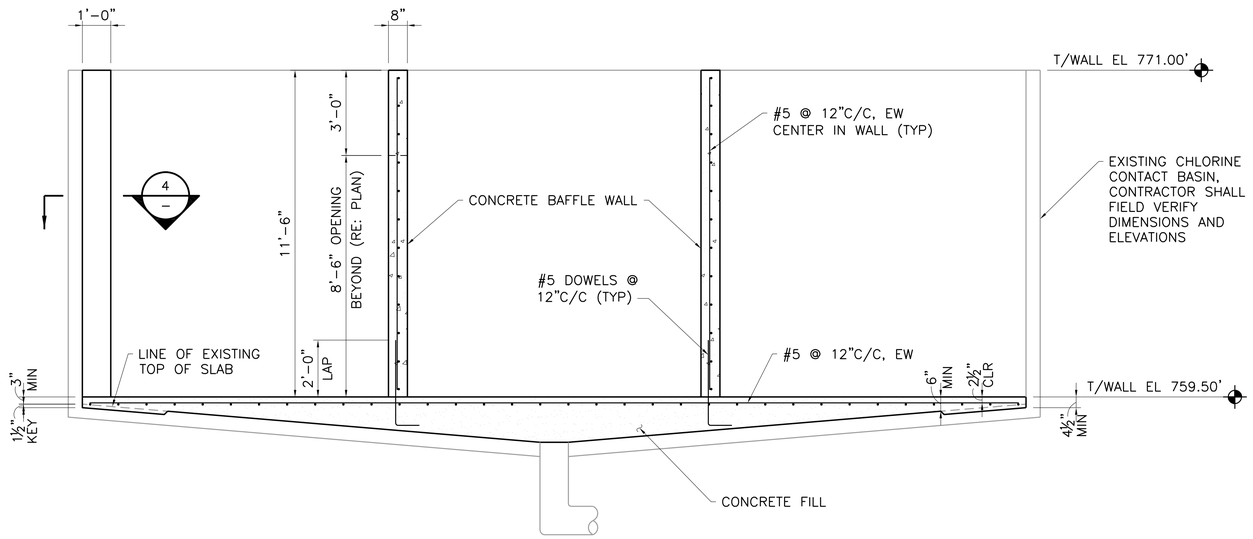

1 CD-S2 SECTION 3/8"=1'-0"

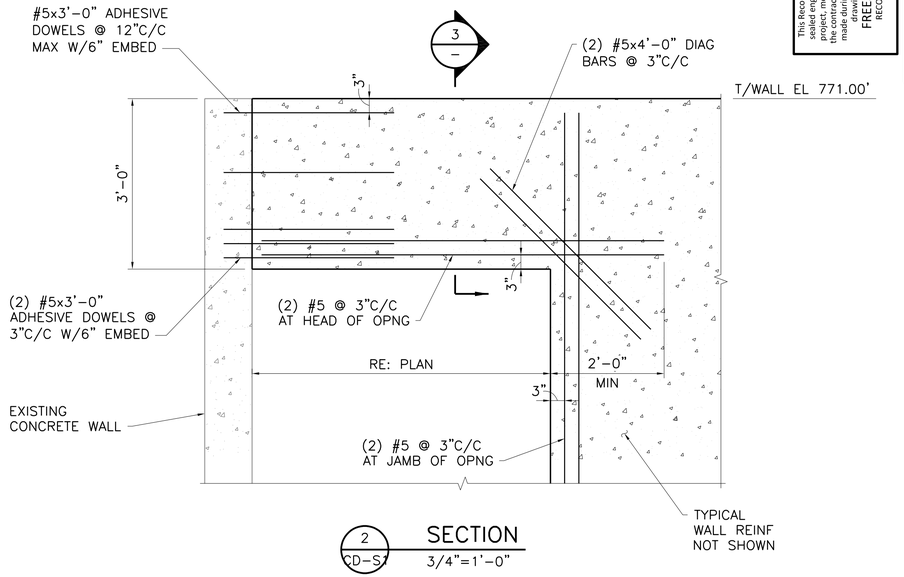

2 CD-S2 SECTION 3/4"=1'-0"

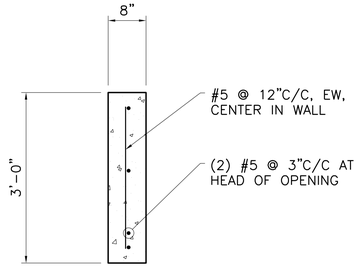

3 — SECTION 3/4"=1'-0"

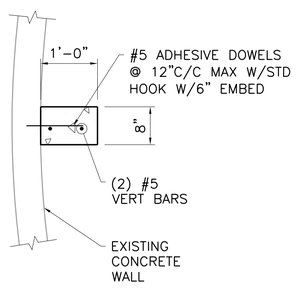

4 — SECTION 3/4"=1'-0"

0 6" 1' 2'
3/4"=1'-0

0 1' 2' 4'
3/8"=1'-0

This Record Drawing is a combination of the sealed engineering contract drawings for this project, modified by information furnished by the contractor reflecting changes in the Project made during construction. The original sealed drawings are on file at the offices of FREESE AND NICHOLS, INC.
RECORD DRAWINGS PREPARED ON: 6/24/2020

THE SEAL APPEARING ON THIS DOCUMENT WAS AUTHORIZED BY JAMES L. MCCLUSKEY, P.E. TEXAS NO. 92201 DATE: 06/24/2020
IT IS A VIOLATION OF THE ENGINEERING PRACTICE ACT FOR ANY PERSON TO ALTER THIS DOCUMENT WITHOUT NOTIFICATION OF THE RESPONSIBLE ENGINEER NAMED HEREON. ANY ALTERATION MUST BE PERFORMED BY A REGISTERED ENGINEER UNDER THE TEXAS ENGINEERING PRACTICE ACT.

Freese and Nichols, Inc.
Texas Registered Engineering Firm F-2144

FREESE NICHOLS
4040 Broadway Street, Suite 600
San Antonio, Texas 78209-6350
Phone - (210) 824-3000
Fax - (210) 298-3801
Web - www.freese.com

CITY OF CASTROVILLE
WWTP CAPACITY EXPANSION PROJECT
STRUCTURAL
CHLORINE DISINFECTION
CHLORINE CONTACT BASIN SECTION

F&N JOB NO. CVL14259
DATE 6/10/16
DESIGNED MRR
DRAWN JLM
CHECKED AD
FILE NAME ST-CCB-SC-CONC01.dwg

NO.	ISSUE	BY	DATE
1	RECORD DRAWING	MRR	06/24/20
1	ISSUED FOR CONSTRUCTION	MRR	11/16/16

VERIFY SCALE Bar is one inch on original drawing. If not one inch on this sheet, adjust scale.

SHEET CD-S2
SEQ.

ACAD Rel: 21.0s (LMS Tech)
Filename: N:\ST\ST-CCB-SC-CONC01.dwg
Last Saved: 6/18/2020 10:57 AM Saved By: 02198

Plot Date: 6/18/2020 11:18 AM Plot By: 02198 Filename: N:\ST\ST-CCB-SC-CONC01.dwg

NOTES:

1. ALL DIMENSIONS SHALL BE FIELD VERIFIED AND CONFIRMED BY EQUIPMENT SUPPLIER AND CONTRACTOR, PRIOR TO MANUFACTURING AND CONSTRUCTION.
2. ALL PIPING, VALVES, FITTINGS, ETC. TO BE COATED AND LINED IN ACCORDANCE WITH THE SPECIFICATIONS.
3. ALL ABOVE GRADE PIPING SHALL BE COATED IN ACCORDANCE WITH SPECIFICATION SECTION 09 96 00.01.
4. ALL BURIED VALVES AND HARDWARE SHALL BE WRAPPED IN 2 COATS OF WAX TAPE.

NOTES BY SYMBOLS "X"

1. 1" COMBINATION ARV
2. 6" CHECK VALVE, FLG
3. 6" PLUG VALVE, FLG
4. 6" RESTRAINED HARNESS (TYPE A), SEE DTL. 366
5. PIPE SUPPORT (TYPE F), SEE DTL. 340
6. 6" 90° BEND, DI, FLG
7. 6" 90° BEND, DI, MJ
8. 6"x6"x6" TEE, FLG
9. PRESSURE GAUGE, SEE DTL. 358
10. 6" DI PIPE, FLG
11. 6" DI PIPE, FLGxPE
12. JIB CRANE
13. SUBMSERSIBLE PUMPS PER SPECIFICATION SECTION 44 42 56.04

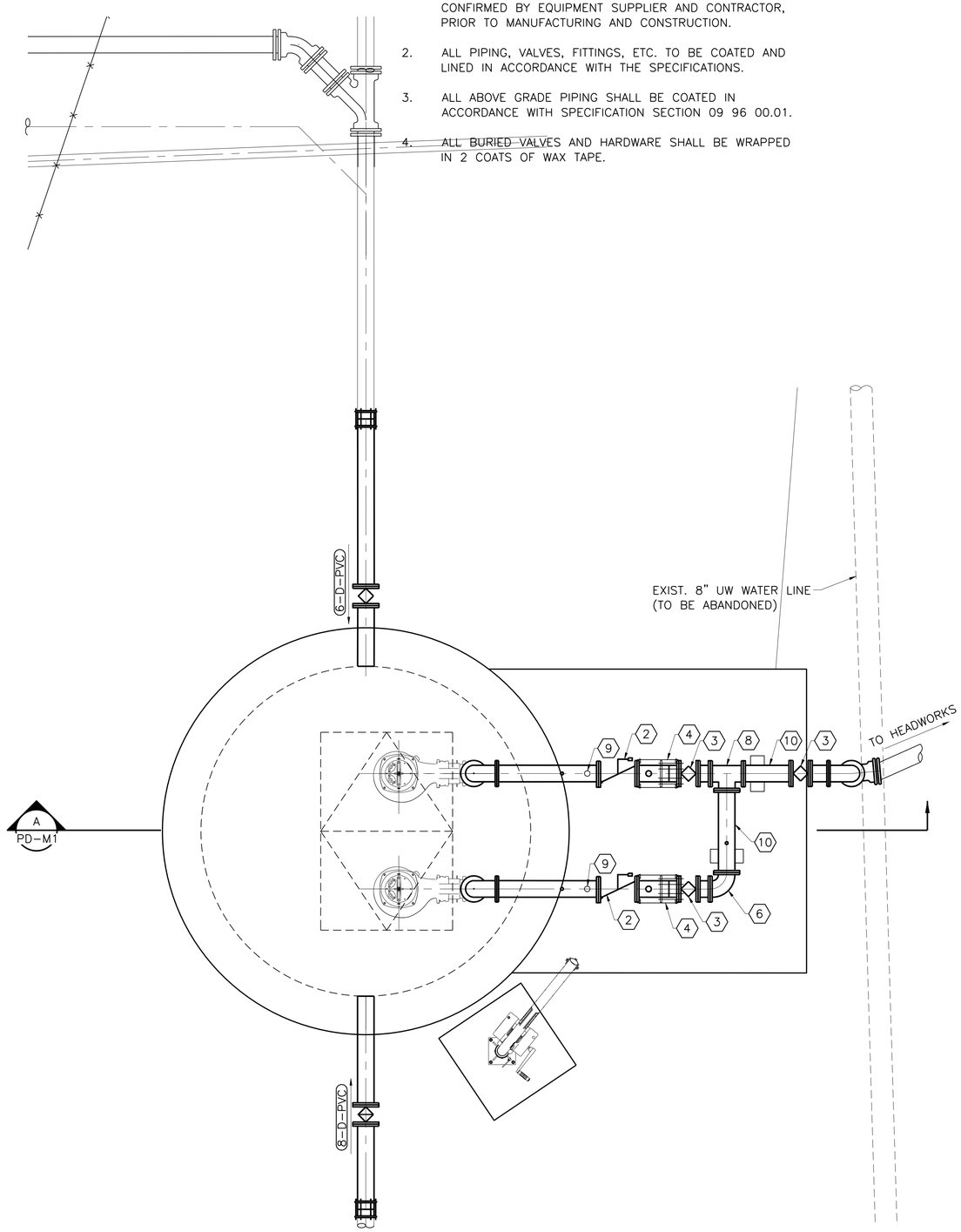

NORTH

1 PD-M1 PLAN VIEW
1/2"=1'-0"

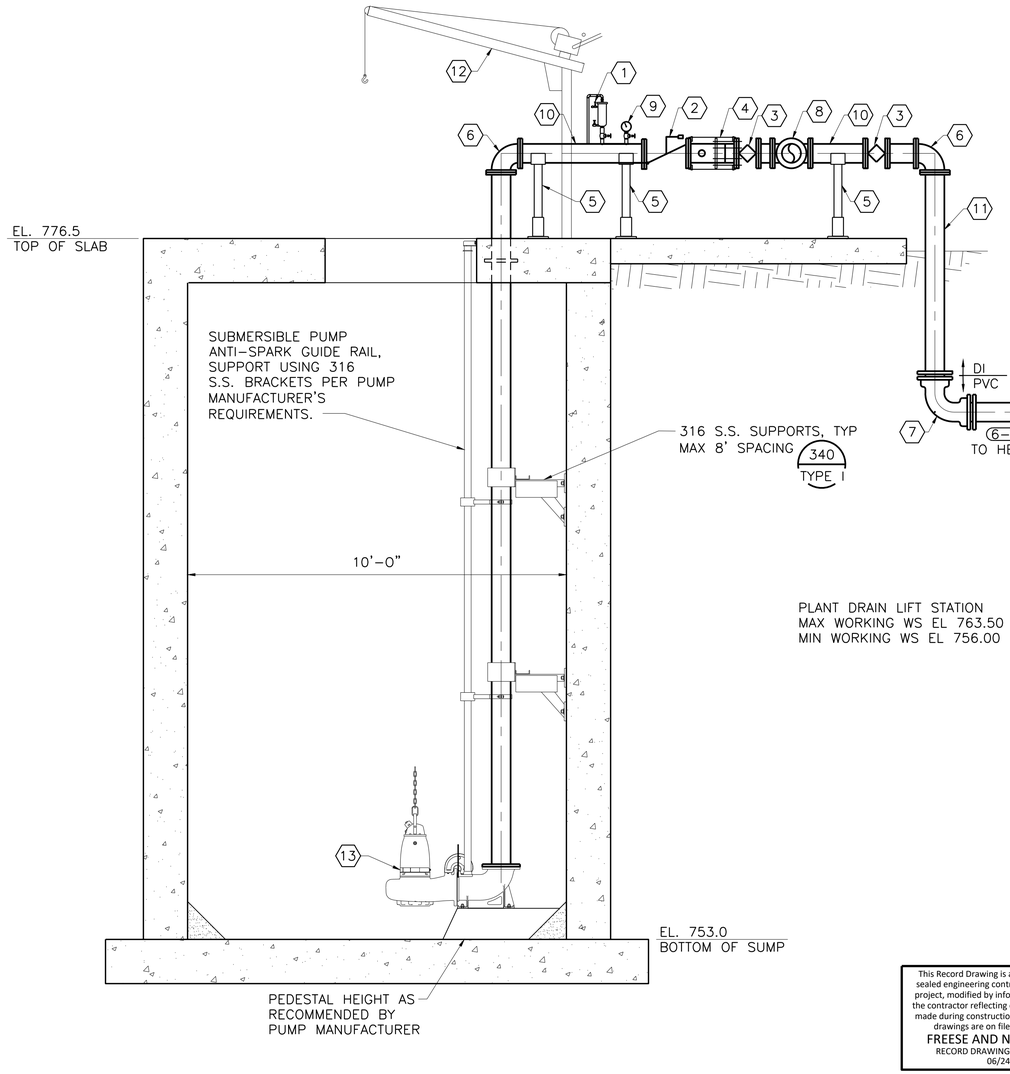

A PD-M1 SECTION
NOT TO SCALE

This Record Drawing is a combination of the sealed engineering contract drawings for this project, modified by information furnished by the contractor reflecting changes in the Project made during construction. The original sealed drawings are on file at the offices of
FREESE AND NICHOLS, INC.
RECORD DRAWINGS PREPARED ON:
06/24/20

0 1' 2' 4'
1/2"=1'-0"

Freese and Nichols, Inc.
Texas Registered Engineering Firm F-2144

THE SEAL THAT ORIGINALLY APPEARED ON THIS DOCUMENT WAS AUTHORIZED BY STEPHANIE D. CECIL TEXAS NO. 113092 ON 08/10/2016. ALTERATION OF A SEALED DOCUMENT WITHOUT PROPER NOTIFICATION OF THE RESPONSIBLE ENGINEER IS AN OFFENSE UNDER THE TEXAS ENGINEERING PRACTICE ACT.

FREESE AND NICHOLS
4040 Broadway Street, Suite 600
San Antonio, Texas 78209-6350
Phone - (210) 298-3800
Fax - (210) 298-3801
Web - www.freese.com

CITY OF CASTROVILLE
WWTP CAPACITY EXPANSION PROJECT
MECHANICAL
PLANT DRAIN LIFT STATION
PLAN VIEW AND SECTION

NO.	ISSUE	BY	DATE
2	RECORD DRAWINGS	SDC	06/24/20
1	ISSUED FOR CONSTRUCTION	CCG	11/16/16

VERIFY SCALE 0 1
Bar is one inch on original drawing. If not one inch on this sheet, adjust scale.

F&N JOB NO. CVL14259
DATE 6/10/16
DESIGNED CCG
DRAWN KV
REVISED
CHECKED TWS
FILE NAME WW-PDLS-PS-MECH01.dwg

SHEET PD-M1
SEQ.

ACAD Rel: 21.0s (LMS Tech)
Filename: N:\WW\Drawings\WW-PDLS-PS-MECH01.dwg
Last Saved: 10/8/2019 3:36 PM Saved By: 03576

Plot Date: 6/18/2020 5:34 PM Plot By: 90119 Filename: N:\WW\Drawings\WW-PDLS-PS-MECH01.dwg

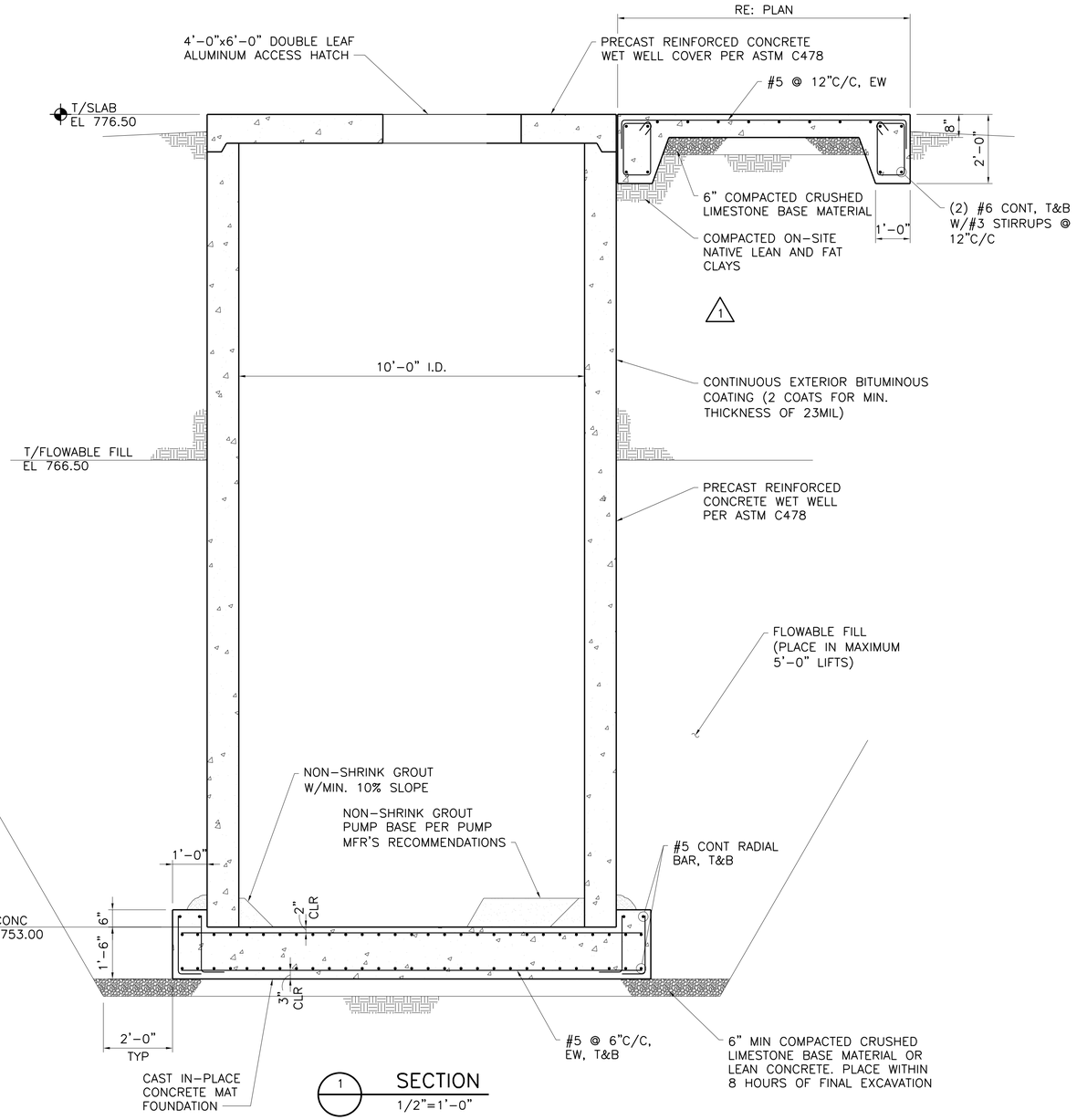

1 SECTION
1/2"=1'-0"

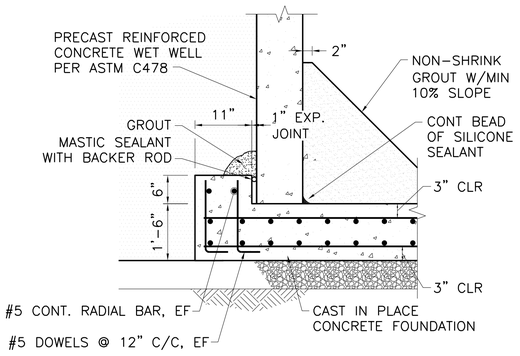

2 FOUNDATION DETAIL
3/4"=1'-0"

This Record Drawing is a combination of the sealed engineering contract drawings for this project, modified by information furnished by the contractor reflecting changes in the Project made during construction. The original sealed drawings are on file at the offices of
FREESE AND NICHOLS, INC.
RECORD DRAWINGS PREPARED ON:
6/24/2020

Freese and Nichols, Inc.
Texas Registered Engineering Firm F-2144

THE SEAL APPEARING ON THIS DOCUMENT WAS AUTHORIZED BY JAMES L. MCCARTY, P.E. TEXAS NO. 92201 DATE: 7/27/2020
IT IS NOT TO BE USED FOR BIDDING OR CONSTRUCTION PURPOSES. ALTERATION OF THE SEALED DOCUMENT WITHOUT THE KNOWLEDGE AND CONSENT OF THE RESPONSIBLE ENGINEER IS A VIOLATION OF THE ENGINEERING PRACTICE ACT.

FREESE AND NICHOLS
4040 Broadway Street, Suite 600
San Antonio, Texas 78209-6350
Phone - (210) 824-3800
Fax - (210) 298-3801
Web - www.freese.com

CITY OF CASTROVILLE

WWTP CAPACITY EXPANSION PROJECT

STRUCTURAL

PLANT DRAIN LIFT STATION SECTION AND DETAILS

NO.	ISSUE	BY	DATE
1	RECORD DRAWING	MRR	06/24/20
2	ISSUED FOR CONSTRUCTION	MRR	11/16/16
1	ADDENDUM NO. 6	MRR	7/28/16

FAN JOB NO. CVL14259
DATE 6/10/16
DESIGNED MRR
DRAWN JLM
REVISED
CHECKED AD
FILE NAME ST-PLS-SC-BLDG.dwg

VERIFY SCALE Bar is one inch on original drawing. If not one inch on this sheet, adjust scale.
0 1" 2"

0 6" 1' 2'
3/4"=1'-0

0 1' 2' 4'
1/2"=1'-0"

SHEET PD-S1
SEQ.

ACAD Rel: 21.0s (LMS Tech)
Filename: N:\ST\ST-PLS-SC-BLDG.dwg
Last Saved: 6/17/2020 1:46 PM Saved By: 02198

Plot Date: 6/18/2020 11:18 AM Plot By: 02198 Filename: N:\ST\ST-PLS-SC-BLDG.dwg

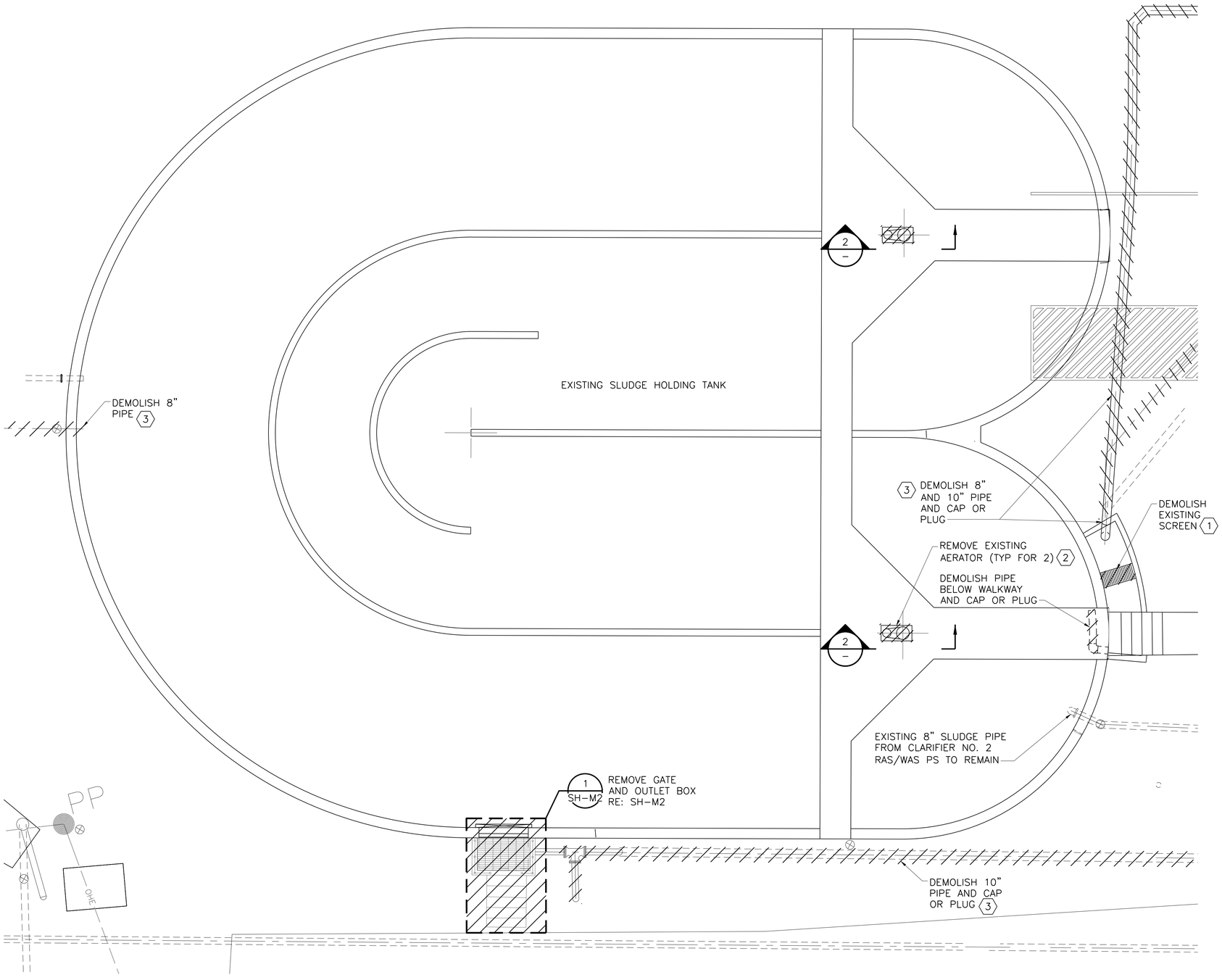

1 TOP PLAN
3/16"=1'-0"

GENERAL NOTES

1. TRANSFER ALL CONTENTS OF THE EXISTING BASIN TO THE NEW BNR BASIN PRIOR TO PERFORMING DEMOLITION WORK. ALL SOLIDS DEPOSITIONS SHALL BE CLEANED OUT AND DISPOSED OF OFF-SITE IN COMPLIANCE WITH ALL STATE REQUIREMENTS.

NOTES BY SYMBOL "⬡"

1. AFTER DEMOLISHING AND REMOVING EXISTING SCREEN, FILL STRUCTURE WITH SAND AND CAP WITH 6-INCH CONCRETE SLAB.
2. COORDINATE WITH OWNER IN REGARDS TO EQUIPMENT SALVAGE.
3. SEE YARD PIPING DEMO DRAWINGS FOR ADDITIONAL INFORMATION.

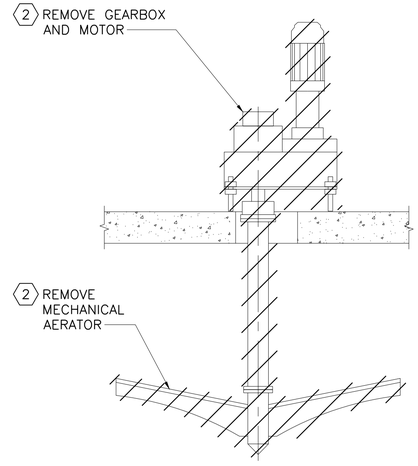

2 DEMOLITION – SECTION
1/2"=1'-0"

This Record Drawing is a combination of the sealed engineering contract drawings for this project, modified by information furnished by the contractor reflecting changes in the Project made during construction. The original sealed drawings are on file at the offices of FREESE AND NICHOLS, INC.
RECORD DRAWINGS PREPARED ON: 06/24/20

0 1' 2' 4'
1/2"=1'-0"
0 4' 8'
3/16"=1'-0"

Freese and Nichols, Inc.
Texas Registered Engineering Firm F-2144

THE SEAL THAT ORIGINALLY APPEARED ON THIS DOCUMENT WAS AUTHORIZED BY GENNADY BOKSNER, P.E. TEXAS NO. 94926 ON 06/10/2016. ALTERATION OF A SEALED DOCUMENT WITHOUT PROPER NOTIFICATION OF THE RESPONSIBLE ENGINEER IS AN OFFENSE UNDER THE TEXAS ENGINEERING PRACTICE ACT.

FREESE AND NICHOLS
4040 Broadway Street, Suite 600
San Antonio, Texas 78209-6350
Phone – (210) 298-3800
Fax – (210) 298-3801
Web – www.freese.com

CITY OF CASTROVILLE
WWTP CAPACITY EXPANSION PROJECT

MECHANICAL
SOLIDS HANDLING – SLUDGE HOLDING
DEMOLITION – TOP PLAN AND SECTION

NO.	ISSUE	BY	DATE
1	ISSUED FOR CONSTRUCTION	GB	11/16/16

F&N JOB NO. CVL14259
DATE 6/10/16
DESIGNED GB
DRAWN MAJ
REVISED
CHECKED TWS
FILE NAME WW-AS-PS-MECH02.dwg

VERIFY SCALE 0 1
Bar is one inch on original drawing. If not one inch on this sheet, adjust scale.

SHEET SH-M1
SEQ.

ACAD Rel: 21.0s (LMS Tech)
Filename: N:\WW\Drawings\WW-AS-PS-MECH02.dwg
Last Saved: 11/14/2016 3:31 PM Saved By: maj

Plot Date: 6/18/2020 5:36 PM Plot By: 90119 Filename: N:\WW\Drawings\WW-AS-PS-MECH02.dwg

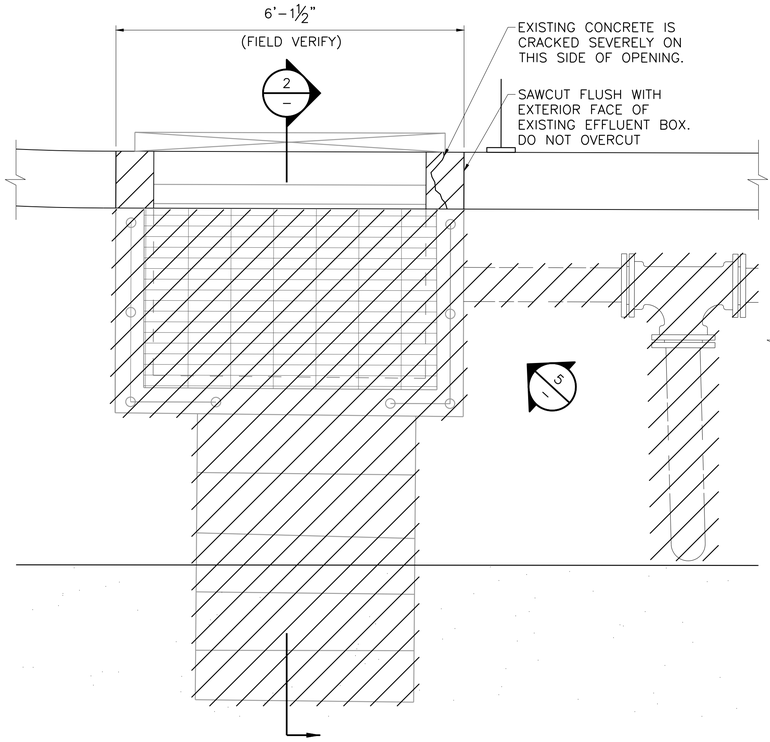

1 — EFFLUENT BOX – DEMO PLAN
SH–M1 — 3/4"=1'-0"

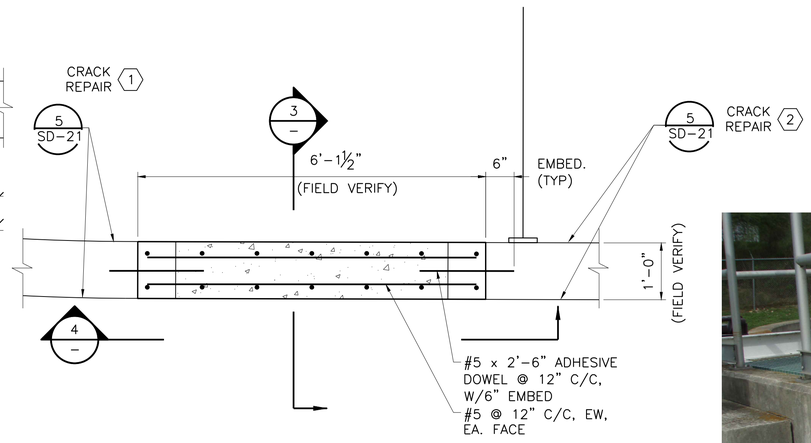

NOTES:
1. REFER TO STRUCTURAL MODIFICATION NOTES ON G–S2.

2 — EFFLUENT BOX – MODIFICATION PLAN
– — 3/4"=1'-0"

NOTES BY SYMBOL "⬡":

1. REPAIR CRACKING ON INTERIOR AND EXTERIOR FACE OF WALL ABOVE AND BELOW GRADE AS NEEDED UP TO APPROXIMATELY 10' AWAY FROM EFFLUENT BOX.
2. REPAIR CRACKING ON INTERIOR AND EXTERIOR FACE OF WALL ABOVE AND BELOW GRADE AS NEEDED UP TO APPROXIMATELY 35' AWAY FROM EFFLUENT BOX.



5 — PHOTO
NTS

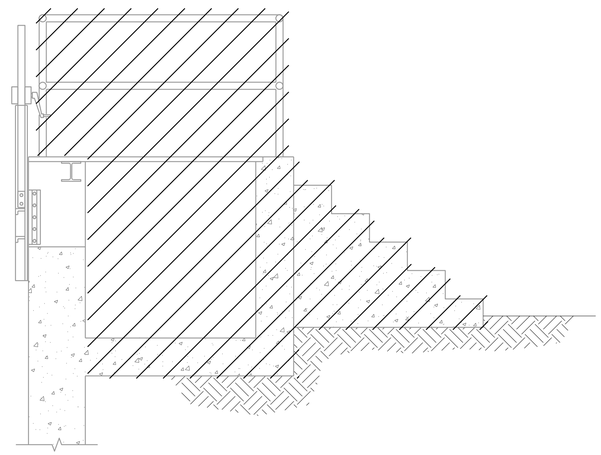

2 — DEMO – SECTION
3/4"=1'-0"

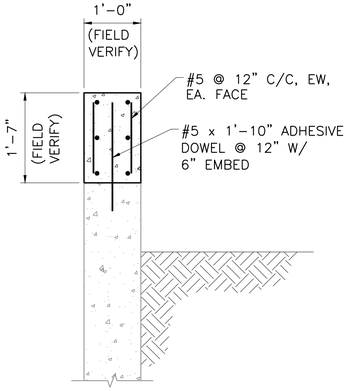

3 — SECTION
– — 3/4"=1'-0"

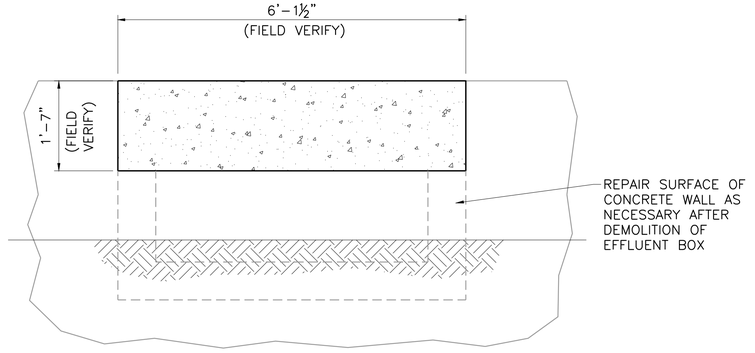

4 — ELEVATION
– — 3/4"=1'-0"

0 6" 1' 2'
3/4"=1'-0

This Record Drawing is a combination of the sealed engineering contract drawings for this project, modified by information furnished by the contractor reflecting changes in the Project made during construction. The original sealed drawings are on file at the offices of
FREESE AND NICHOLS, INC.
RECORD DRAWINGS PREPARED ON: 06/24/20

Freese and Nichols, Inc.
Texas Registered Engineering Firm F-2144

THE SEAL (NF ORIGINALLY APPEARED ON THIS DOCUMENT WAS AUTHORIZED BY MICHAEL RAY ROBERTSON, P.E. 108,343 ON 11/14/2016. IT IS A VIOLATION OF A SEALED DOCUMENT WITHOUT PROPER AUTHORITY TO ALTER THE SEALED DOCUMENT. ALTERATION OF A SEALED DOCUMENT IS AN ACT OFFENSE UNDER THE TEXAS ENGINEERING PRACTICE ACT

FREESE NICHOLS
4040 Broadway Street, Suite 600
San Antonio, Texas 78209-6350
Phone: (210) 829-3800
Fax: (210) 829-3901
Web – www.freese.com

CITY OF CASTROVILLE

WWTP CAPACITY EXPANSION PROJECT

MECHANICAL

SOLIDS HANDLING – EFFLUENT BOX DEMOLITION AND IMPROVEMENTS

FSN JOB NO.	CVL14259
DATE	6/10/16
DESIGNED	GB
DRAWN	MAJ
CHECKED	TWS
FILE NAME	WW-AS-PS-MECH01.dwg

NO.	ISSUE	DATE	BY
1	ISSUED FOR CONSTRUCTION	11/16/16	GB

VERIFY SCALE Bar is one inch on original drawing. If not one inch on this sheet, adjust scale.
0 1"

SHEET
SH–M2
SEQ.

ACAD Rel: 21.0s (LMS Tech)
Filename: N:\WW\Drawings\WW-AS-PS-MECH01.dwg
Last Saved: 11/14/2016 3:31 PM Saved By: maj

Plot Date: 6/18/2020 5:38 PM Plot By: 90119 Filename: N:\WW\Drawings\WW-AS-PS-MECH01.dwg

NOTES BY SYMBOL "⬡":

1. FILL BOX W/ SAND AND CAP W/ CONCRETE.
2. DISTANCE MEASURED TO ℄ OF EACH UNIT.
3. FLOATING DECANTER SHALL BE CAPABLE OF OPERATING BETWEEN ELEVATIONS 773.4 AND 769.4 AND SHALL DECANT AT A MINIMUM RATE OF 150 GPM AND A MAXIMUM FLOW RATE OF 200 GPM. DECANTER SHALL BE CONSTRUCTED W/ 304 SS AND/OR OTHER NON-CORROSIVE MATERIAL AS MANUFACTURED BY FLUIDYNE, WESTECH, CLEANTEK OR APPROVED EQUAL.

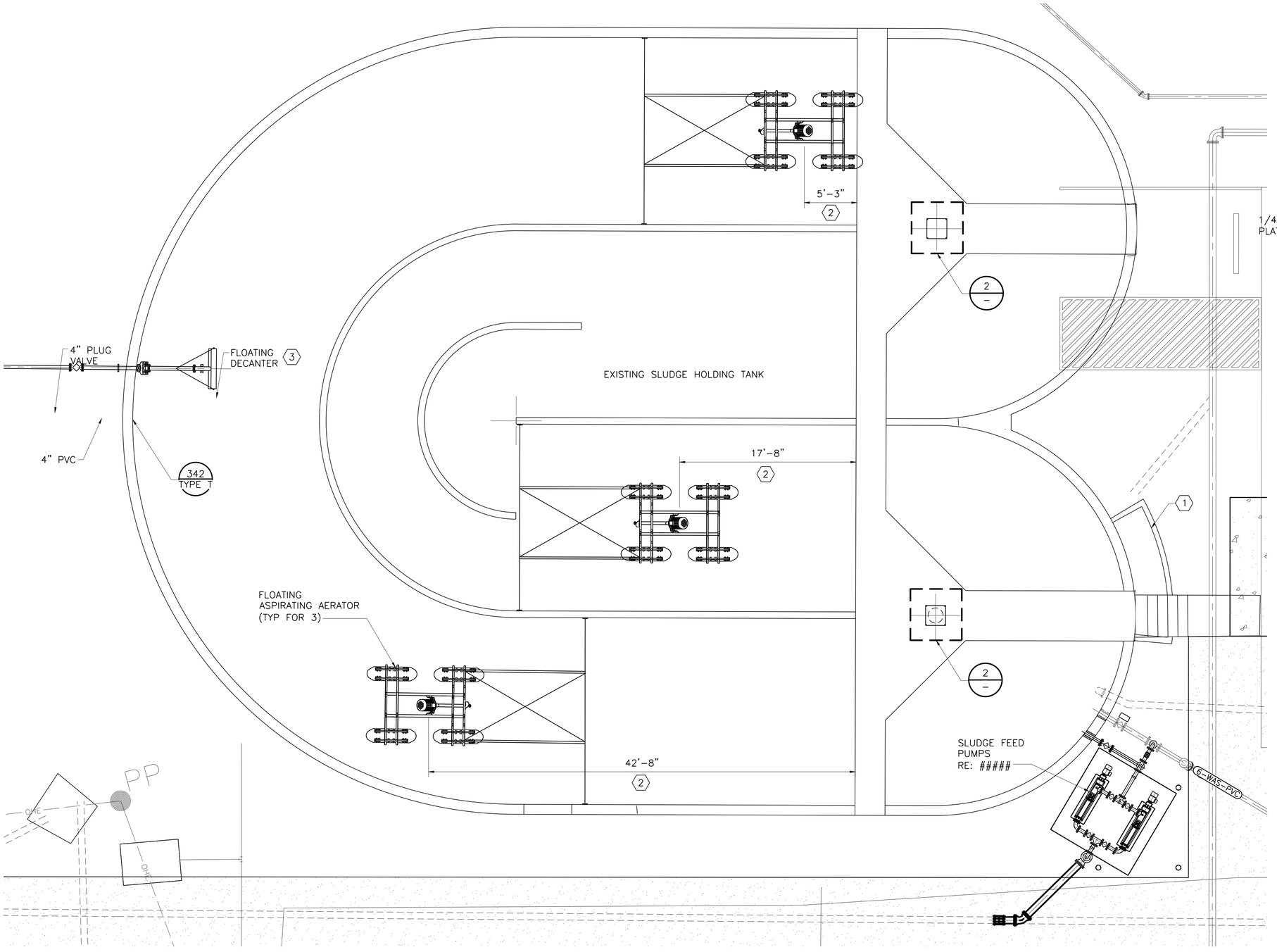

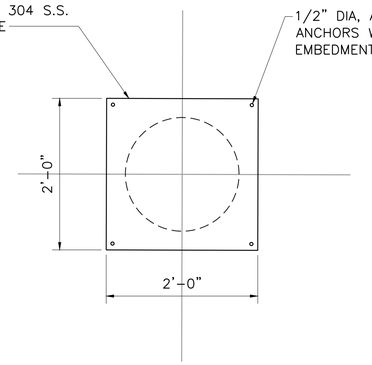

2 — COVER PLATE DETAIL
1"=1'-0"

NORTH 1 — TOP PLAN
3/16"=1'-0"

This Record Drawing is a combination of the sealed engineering contract drawings for this project, modified by information furnished by the contractor reflecting changes in the Project made during construction. The original sealed drawings are on file at the offices of
FREESE AND NICHOLS, INC.
RECORD DRAWINGS PREPARED ON:
06/24/20

0 6" 1' 2'
1"=1'-0"

0 4' 8'
3/16"=1'-0"

Freese and Nichols, Inc.
Texas Registered Engineering Firm F-2144

THE SEAL (NA) ORIGINALLY APPEARED ON THIS DOCUMENT WAS AUTHORIZED BY GERARD BOSCHER P.E. ____
NO PERSON MAY COPY OR ISSUE THIS DOCUMENT WITHOUT PROPER ALTERATION OF A SEALED DOCUMENT WITHOUT PROPER AUTHORIZATION IS A VIOLATION OF THE LAW AND MAY BE AN OFFENSE UNDER THE TEXAS ENGINEERING PRACTICE ACT

FREESE NICHOLS
4040 Broadway Street, Suite 600
San Antonio, Texas 78209-6350
Phone (210) 538-5500
Fax (210) 828-6401
Web – www.freese.com

CITY OF CASTROVILLE

WWTP CAPACITY EXPANSION PROJECT

MECHANICAL

SOLIDS HANDLING – SLUDGE HOLDING IMPROVEMENTS – TOP PLAN AND SECTION

NO.	ISSUE	BY	DATE
1	RECORD DRAWINGS	GB	06/24/20
0	ISSUED FOR CONSTRUCTION	GB	11/16/16

VERIFY SCALE Bar is one inch on original drawing. If not one inch on this sheet, adjust scale.
0 1

F&N JOB NO.	CVL14259
DATE	6/10/16
DESIGNED	GB
DRAWN	MAJ
REVISED	-
CHECKED	TWS
FILE NAME	WW-AS-PS-MECH03.dwg

SHEET
SH-M3
SEQ.

ACAD Rel: 21.0s (LMS Tech)
Filename: N:\WW\Drawings\WW-AS-PS-MECH03.dwg
Last Saved: 10/8/2019 3:51 PM Saved By: 03576

Plot Date: 6/18/2020 5:40 PM Plot By: 90119 Filename: N:\WW\Drawings\WW-AS-PS-MECH03.dwg

GENERAL NOTES:

1. ALL PIPES ABOVE GRADE THAT ARE 10" AND SMALLER SHALL BE HEAT TRACED AND INSULATED. REFERENCE SPECIFICATIONS AND ELECTRICAL DRAWINGS FOR ADDITIONAL INFORMATION.

NOTES BY SYMBOL "⬡"

(1) PROGRESSIVE CAVITY PUMPS, VFDS AND CONTROLS TO BE SUPPLIED BY THE SCREW PRESS MANUFACTURER.

(2) SUCTION FLANGE SHALL BE ROTATED 90 DEGREES FROM VERTICAL.

(3) CONTRACTOR SHALL SUPPLY INDUSTRIAL HEATING BLANKET FOR EACH PUMP, TO BE STORED BY THE OWNER. HEATING BLANKETS SHALL BE 120V, FREEZEPRO BY UNITHERM INTERNATIONAL, INC., OR APPROVED EQUAL, SIZED TO COMPLETELY COVER EACH PUMP.

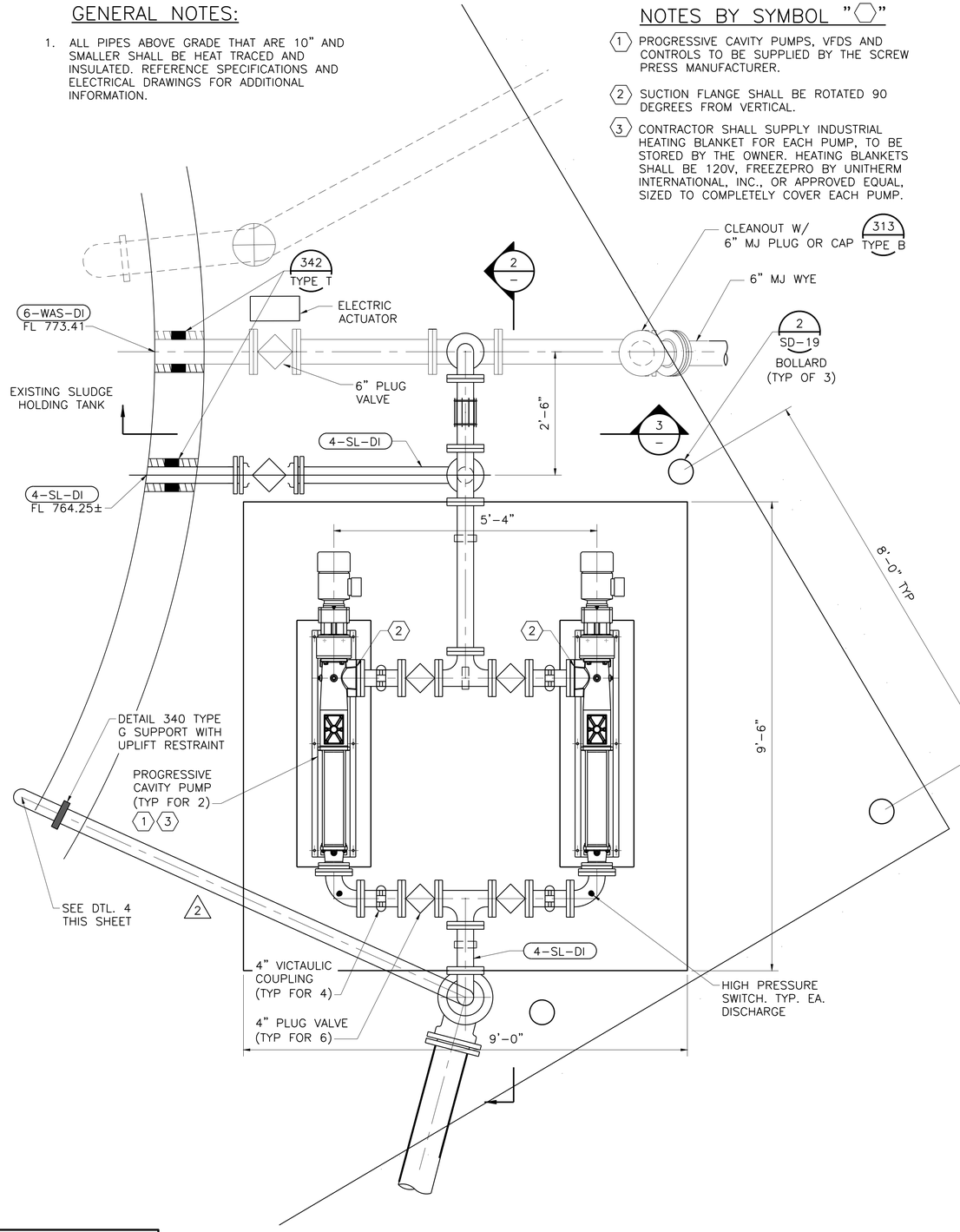

NORTH 1 — PLAN 3/4"=1'-0"

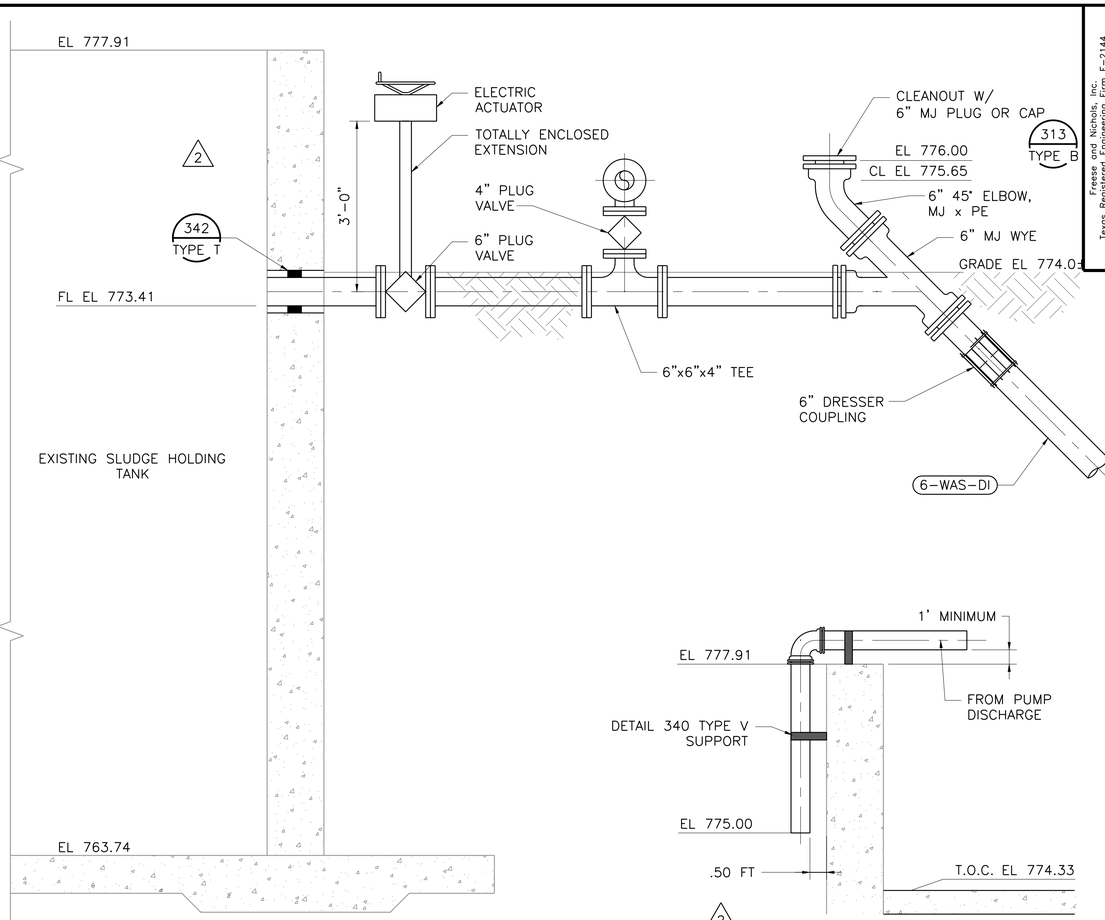

3 — SECTION 3/4"=1'-0"

4 — SECTION 3/4"=1'-0"

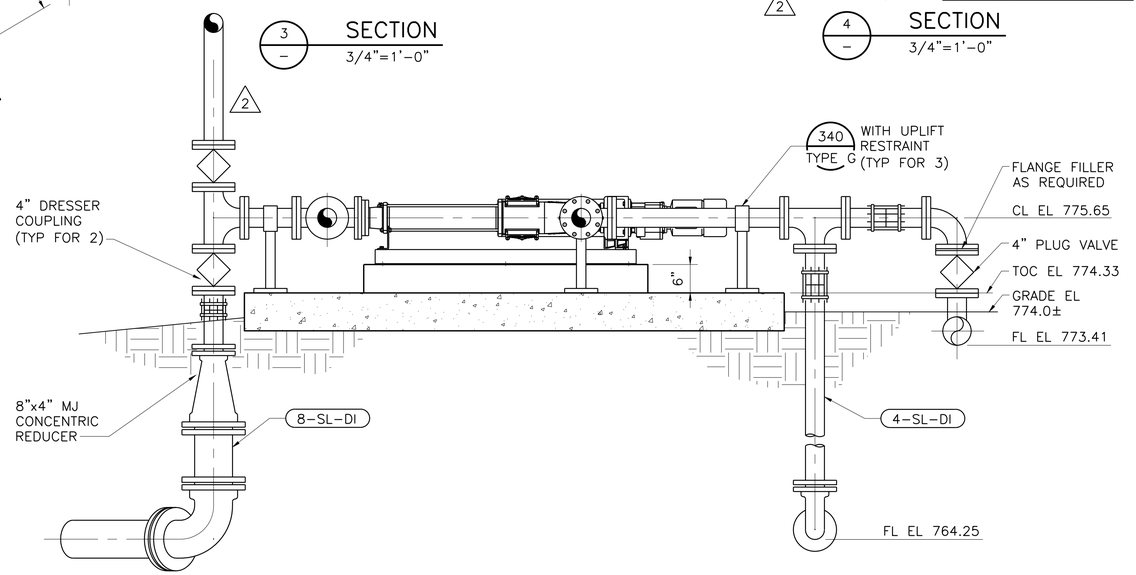

2 — SECTION 3/4"=1'-0"

0 6" 1' 2' — 3/4"=1'-0

This Record Drawing is a combination of the sealed engineering contract drawings for this project, modified by information furnished by the contractor reflecting changes in the Project made during construction. The original sealed drawings are on file at the offices of FREESE AND NICHOLS, INC.
RECORD DRAWINGS PREPARED ON: 06/24/20

THE SEAL HAS BEEN ORIGINALLY APPLIED ON THIS DOCUMENT WAS AUTHORIZED BY GERARD BOSCHER P.E.
THIS DOCUMENT IS RELEASED FOR THE PURPOSE OF INTERIM REVIEW ONLY AND SHALL NOT BE USED FOR BIDDING OR CONSTRUCTION PURPOSES.
ALTERATION OF A SEALED DOCUMENT WITHOUT PROPER AUTHORITY AND SPECIFIC DESCRIPTION OF THE ALTERATION IS AN OFFENSE UNDER THE TEXAS ENGINEERING PRACTICE ACT

Freese and Nichols, Inc.
Texas Registered Engineering Firm F-2144

FREESE NICHOLS
4040 Broadway Street, Suite 600
San Antonio, Texas 78209-6350
Phone - (210) 829-3000
Fax - (210) 826-2901
Web - www.freese.com

CITY OF CASTROVILLE

WWTP CAPACITY EXPANSION PROJECT

MECHANICAL

SOLIDS HANDLING - SLUDGE FEED PUMPS PLAN AND SECTION

NO.	ISSUE	BY	DATE
1	RECORD DRAWINGS	GB	06/24/20
0	ISSUED FOR CONSTRUCTION	GB	11/16/16

VERIFY SCALE Bar is one inch on original drawing. If not one inch on this sheet, adjust scale.

F&N JOB NO. CVL14259
DATE 6/10/16
DESIGNED GB
DRAWN MAJ
CHECKED TWS
FILE NAME WW-AS-PS-MECH03.dwg

SHEET SH-M4
SEQ.

ACAD Rel: 21.0s (LMS Tech)
Filename: N:\STANDARD\WW-AS-PS-MECH03.dwg
Last Saved: 10/8/2019 3:49 PM Saved By: 03576

Plot Date: 6/18/2020 5:44 PM Plot By: 90119 Filename: N:\STANDARD\WW-AS-PS-MECH03.dwg

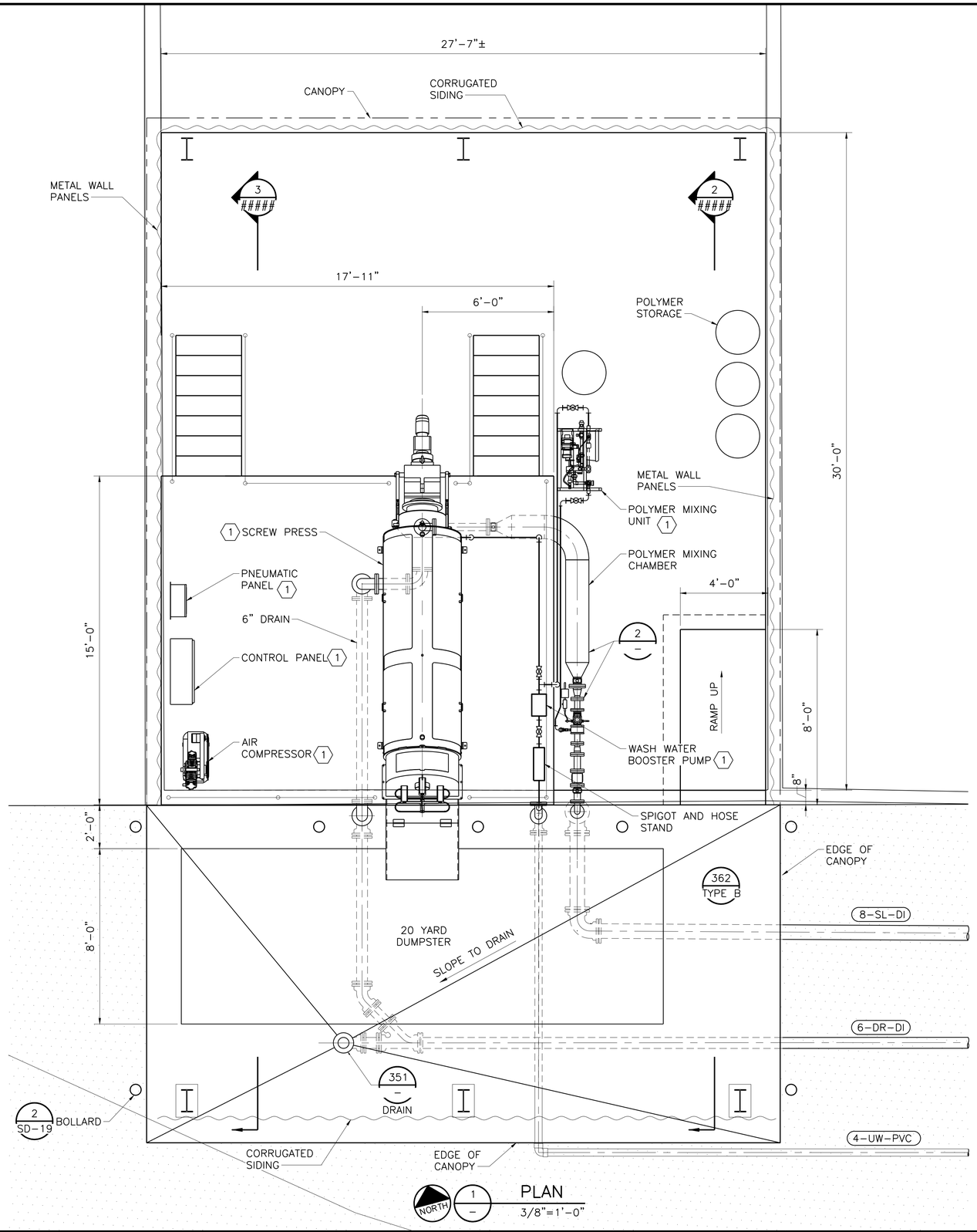

1 PLAN
3/8"=1'-0"

GENERAL NOTES

1. REFER TO SPECIFICATION SECTION 01 35 00 FOR SPECIAL PROCEDURES AND CONSTRUCTION SEQUENCING.
2. ALL EQUIPMENT SHOWN ON THIS SHEET IS DESIGNED AROUND HUBER ROS3-Q620 SCREW PRESS. IF ANOTHER APPROVED MANUFACTURER IS SELECTED, THE CONTRACTOR SHALL MODIFY THE DESIGN/ LAYOUT PER SELECTED MANUFACTURER'S RECOMMENDATIONS AT NO ADDITIONAL COST TO THE OWNER.
3. ALL PIPES ABOVE GRADE THAT ARE 10" AND SMALLER, SHALL BE HEAT TRACED AND INSULATED. REFERENCE SPECIFICATIONS AND ELECTRICAL DRAWINGS FOR ADDITIONAL INFORMATION.

NOTES BY SYMBOL "⬡"

1 EQUIPMENT TO BE PROVIDED BY THE SCREW PRESS MANUFACTURER.

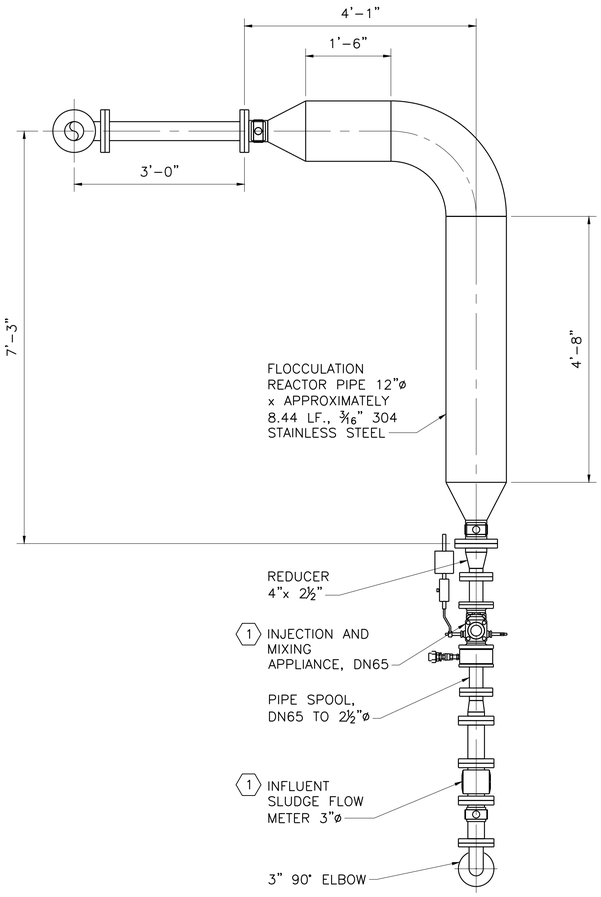

2 DETAIL
3/4"=1'-0"

This Record Drawing is a combination of the sealed engineering contract drawings for this project, modified by information furnished by the contractor reflecting changes in the Project made during construction. The original sealed drawings are on file at the offices of
FREESE AND NICHOLS, INC.
RECORD DRAWINGS PREPARED ON: 06/24/20

0 6" 1' 2'
3/4"=1'-0
0 1' 2' 4'
3/8"=1'-0

Freese and Nichols, Inc.
Texas Registered Engineering Firm F-2144

THE SEAL THAT ORIGINALLY APPEARED ON THIS DOCUMENT WAS AUTHORIZED BY GENNADY BOHSNER P.E. TEXAS NO. 94926 ON 06/10/2016. ALTERATION OF A SEALED DOCUMENT WITHOUT PROPER NOTIFICATION OF THE RESPONSIBLE ENGINEER IS AN OFFENSE UNDER THE TEXAS ENGINEERING PRACTICE ACT.

FREESE AND NICHOLS
4040 Broadway Street, Suite 600
San Antonio, Texas 78209-6350
Phone - (210) 298-3800
Fax - (210) 298-3801
Web - www.freese.com

CITY OF CASTROVILLE
WWTP CAPACITY EXPANSION PROJECT
MECHANICAL
SOLIDS HANDLING - SCREW PRESS PLAN

NO.	ISSUE	BY	DATE
2	RECORD DRAWINGS	GB	06/24/20
1	ISSUED FOR CONSTRUCTION	GB	11/16/16

F&N JOB NO. CVL14259
DATE 6/10/16
DESIGNED GB
DRAWN MAJ
REVISED
CHECKED TWS
FILE NAME WW-SH-DT-MECH01.dwg

VERIFY SCALE 0 1
Bar is one inch on original drawing. If not one inch on this sheet, adjust scale.

SHEET SH-M5
SEQ.

ACAD Rel: 21.0s (LMS Tech)
Filename: N:\WW\Drawings\WW-SH-DT-MECH01.dwg
Last Saved: 10/8/2019 3:49 PM Saved By: 03576

Plot Date: 6/18/2020 5:46 PM Plot By: 90119 Filename: N:\WW\Drawings\WW-SH-DT-MECH01.dwg

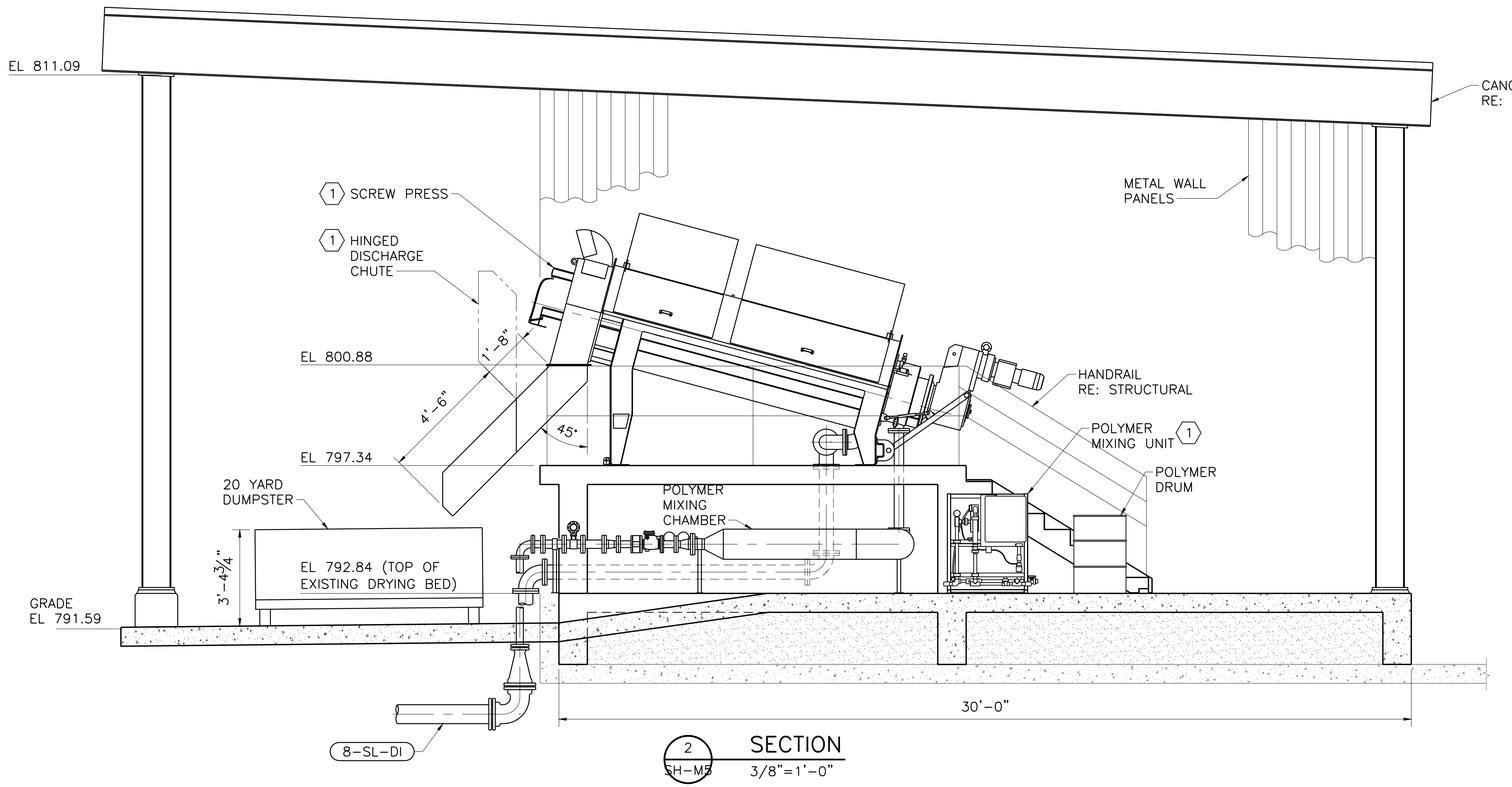

2 SH-M5 SECTION
3/8"=1'-0"

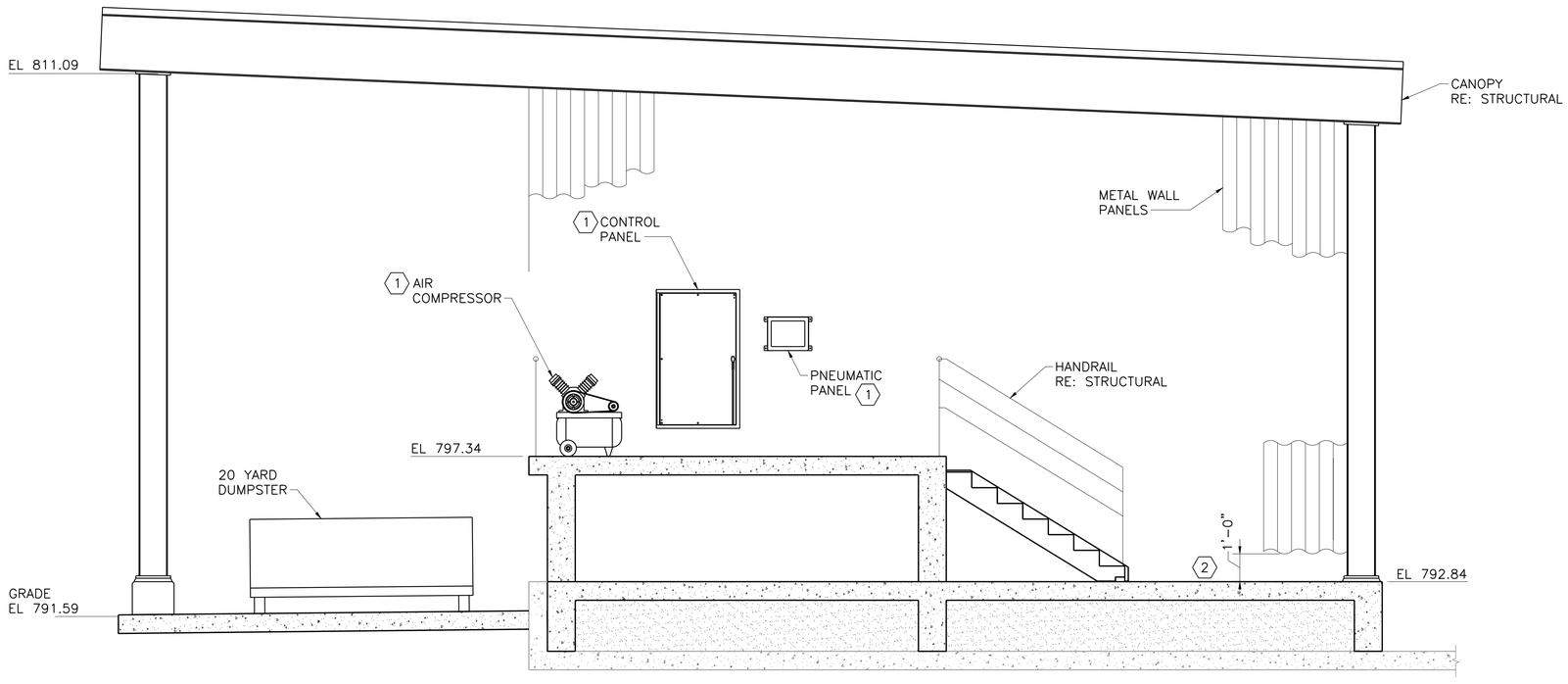

3 SH-M5 SECTION
3/8"=1'-0"

GENERAL NOTES

1. REFER TO SPECIFICATION SECTION 01 35 00 FOR SPECIAL PROCEDURES AND CONSTRUCTION SEQUENCING.
2. ALL EQUIPMENT SHOWN ON THIS SHEET IS DESIGNED AROUND HUBER ROS3-Q620 SCREW PRESS. IF ANOTHER APPROVED MANUFACTURER IS SELECTED, THE CONTRACTOR SHALL MODIFY THE DESIGN/ LAYOUT PER SELECTED MANUFACTURER'S RECOMMENDATIONS AT NO ADDITIONAL COST TO THE OWNER.
3. UTILITY WATER LINE AND EQUIPMENT ARE NOT SHOWN FOR CLARITY.
4. ALL PIPES ABOVE GRADE THAT ARE 10" AND SMALLER, SHALL BE HEAT TRACED AND INSULATED. REFERENCE SPECIFICATIONS AND ELECTRICAL DRAWINGS FOR ADDITIONAL INFORMATION.

NOTES BY SYMBOL "⬡"

1. EQUIPMENT TO BE PROVIDED BY THE SCREW PRESS MANUFACTURER.
2. METAL WALL PANELS TO PROVIDE 1'-0" CLEARANCE FROM SLAB AS SHOWN.

This Record Drawing is a combination of the sealed engineering contract drawings for this project, modified by information furnished by the contractor reflecting changes in the Project made during construction. The original sealed drawings are on file at the offices of
FREESE AND NICHOLS, INC.
RECORD DRAWINGS PREPARED ON:
06/24/20

0 1' 2' 4'
3/8"=1'-0

Freese and Nichols, Inc.
Texas Registered Engineering Firm F-2144

THE SEAL THAT ORIGINALLY APPEARED ON THIS DOCUMENT WAS AUTHORIZED BY GENNADY BOKSNER P.E. TEXAS NO. 94926 ON 08/10/2016. ALTERATION OF A SEALED DOCUMENT WITHOUT PROPER NOTIFICATION OF THE RESPONSIBLE ENGINEER IS AN OFFENSE UNDER THE TEXAS ENGINEERING PRACTICE ACT.

FREESE AND NICHOLS
4040 Broadway Street, Suite 600
San Antonio, Texas 78209-6350
Phone - (210) 298-3800
Fax - (210) 298-3801
Web - www.freese.com

CITY OF CASTROVILLE
WWTP CAPACITY EXPANSION PROJECT
MECHANICAL
SOLIDS HANDLING - SCREW PRESS
ELEVATION

NO.	ISSUE	BY	DATE
2	RECORD DRAWINGS	GB	06/24/20
1	ISSUED FOR CONSTRUCTION	GB	11/16/16

F&N JOB NO. CVL14259
DATE 6/10/16
DESIGNED GB
DRAWN MAJ
REVISED
CHECKED TWS
FILE NAME WW-SH-DT-MECH02.dwg

VERIFY SCALE 0 1
Bar is one inch on original drawing. If not one inch on this sheet, adjust scale.

SHEET SH-M6
SEQ.

ACAD Rel: 21.0s (LMS Tech)
Filename: N:\WW\Drawings\WW-SH-DT-MECH02.dwg
Last Saved: 10/8/2019 3:44 PM Saved By: 03576

Plot Date: 6/18/2020 5:47 PM Plot By: 90119 Filename: N:\WW\Drawings\WW-SH-DT-MECH02.dwg

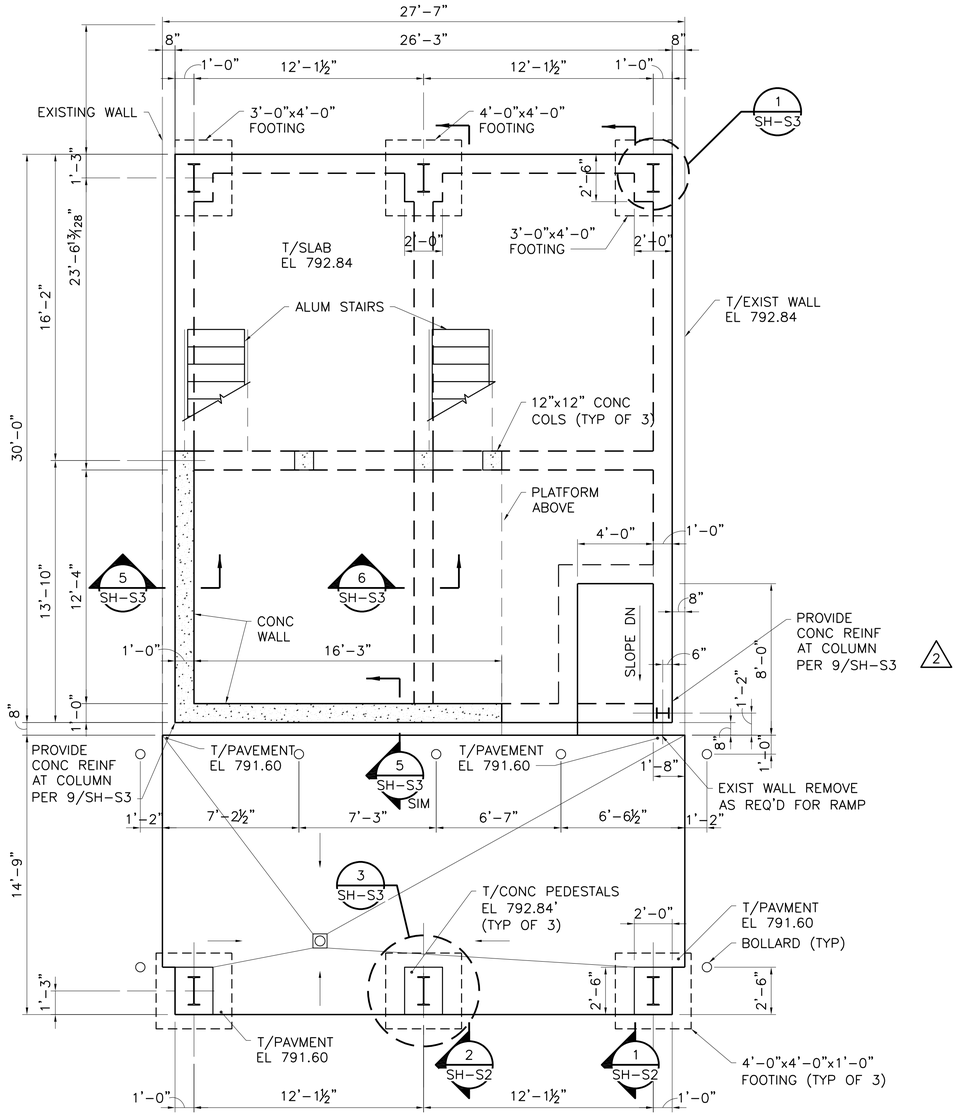

1 FOUNDATION PLAN
1/4"=1'-0"

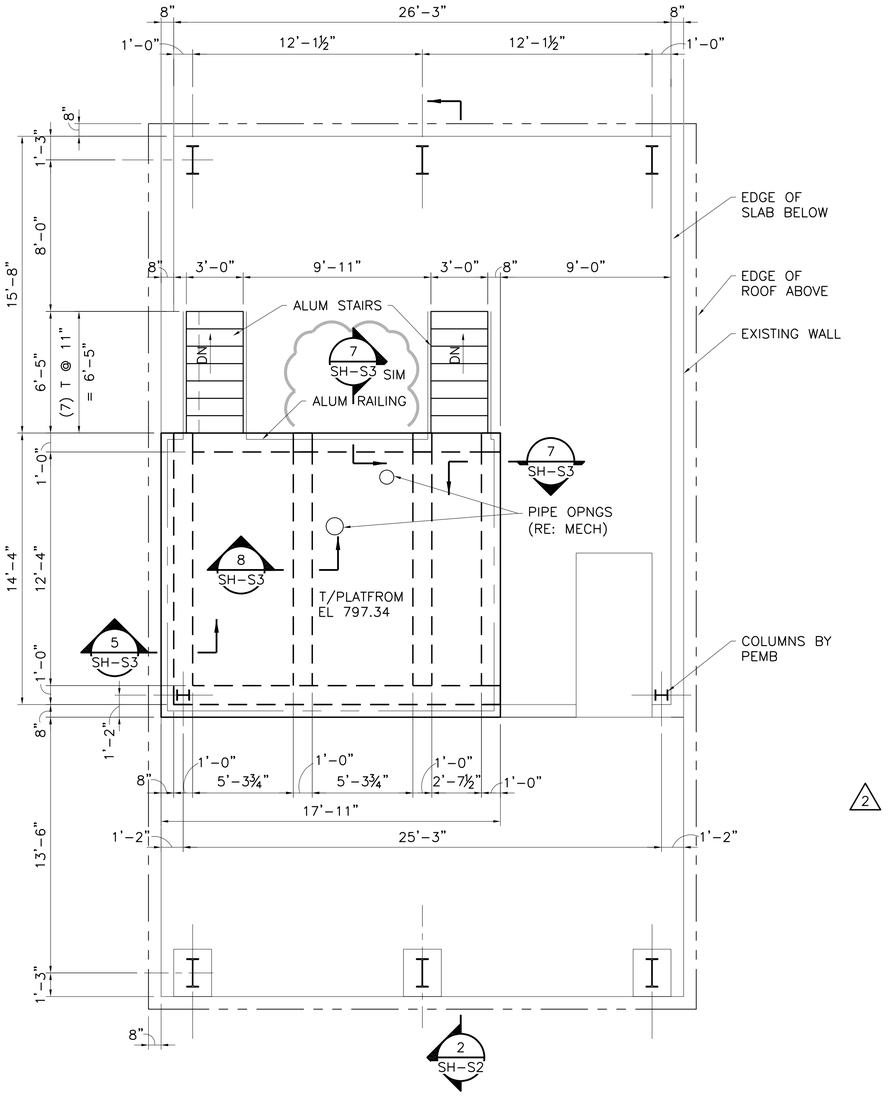

2 PLATFORM PLAN
1/4"=1'-0"

0 1' 2' 4' 8'
1/4"=1'-0"

This Record Drawing is a combination of the sealed engineering contract drawings for this project, modified by information furnished by the contractor reflecting changes in the Project made during construction. The original sealed drawings are on file at the offices of
FREESE AND NICHOLS, INC.
RECORD DRAWINGS PREPARED ON:
6/24/2020

Freese and Nichols, Inc.
Texas Registered Engineering Firm F-2144

THE SEAL APPEARING ON THIS DOCUMENT WAS AUTHORIZED BY MATTHEW R. FLEMING, P.E.
TEXAS NO. 92201
DATE: 7/22/2020
IT IS A VIOLATION OF THE ENGINEERING PRACTICE ACT FOR ANY PERSON TO ALTER THIS DOCUMENT IN ANY MANNER WITHOUT THE RESPONSIBLE ENGINEER'S NOTIFICATION OF THE RESPONSIBLE ENGINEER'S INTENT TO DO SO. RELEASED FOR REVIEW PURPOSES ONLY BY MATTHEW R. FLEMING, P.E. TEXAS NO. 92201 ON 7/22/2020. IT IS NOT TO BE USED FOR BIDDING, PERMIT, OR CONSTRUCTION PURPOSES. IT IS THE PROPERTY OF FREESE AND NICHOLS, INC. AND IS NOT TO BE ALTERED IN ANY WAY. ANY REUSE WITHOUT WRITTEN VERIFICATION OR ADAPTATION BY FREESE AND NICHOLS, INC. FOR THE SPECIFIC PURPOSE INTENDED WILL BE AT THE USER'S SOLE RISK AND WITHOUT LIABILITY OR LEGAL EXPOSURE TO FREESE AND NICHOLS, INC. ALL REQUESTS TO REUSE THIS DOCUMENT OR PORTIONS THEREOF SHALL BE REFERRED TO FREESE AND NICHOLS, INC. IN WRITING. THIS DOCUMENT IS NOT INTENDED OR REPRESENTED TO BE SUITABLE FOR REUSE BY OTHERS ON EXTENSIONS OF THIS PROJECT OR ON ANY OTHER PROJECT. ANY REUSE WITHOUT WRITTEN VERIFICATION OR ADAPTATION BY FREESE AND NICHOLS, INC. FOR THE SPECIFIC PURPOSE INTENDED WILL BE AT THE USER'S SOLE RISK AND WITHOUT LIABILITY OR LEGAL EXPOSURE TO FREESE AND NICHOLS, INC. ALL REQUESTS TO REUSE THIS DOCUMENT OR PORTIONS THEREOF SHALL BE REFERRED TO FREESE AND NICHOLS, INC. IN WRITING. THIS DOCUMENT IS NOT INTENDED OR REPRESENTED TO BE SUITABLE FOR REUSE BY OTHERS ON EXTENSIONS OF THIS PROJECT OR ON ANY OTHER PROJECT.

FREESE NICHOLS
4040 Broadway Street, Suite 600
San Antonio, Texas 78209-6350
Phone: (210) 829-3800
Fax: (210) 298-1801
Web - www.freese.com

CITY OF CASTROVILLE

WWTP CAPACITY EXPANSION PROJECT

STRUCTURAL

SOLIDS HANDLING - SCREW PRESS FOUNDATION AND PLATFORM PLANS

NO.	ISSUE	BY	DATE
2	RECORD DRAWING	MRR	06/24/20
1	PCM NO. 2	MRR	07/03/17
0	ISSUED FOR CONSTRUCTION	MRR	11/16/16

FAN JOB NO. CVL14259
DATE 6/10/16
DESIGNED MRR
DRAWN JAW/JLM
REVISED -
CHECKED AD
FILE NAME ST-SHS-PL-FNDN01.dwg

VERIFY SCALE Bar is one inch on original drawing. If not one inch on this sheet, adjust scale.
0 1"

SHEET
SH-S1
SEQ.

ACAD Rel: 21.0s (LMS Tech)
Filename: N:\ST\ST-SHS-PL-FNDN01.dwg
Last Saved: 6/17/2020 1:52 PM Saved By: 02198

Plot Date: 6/18/2020 11:18 AM Plot By: 02198 Filename: N:\ST\ST-SHS-PL-FNDN01.dwg

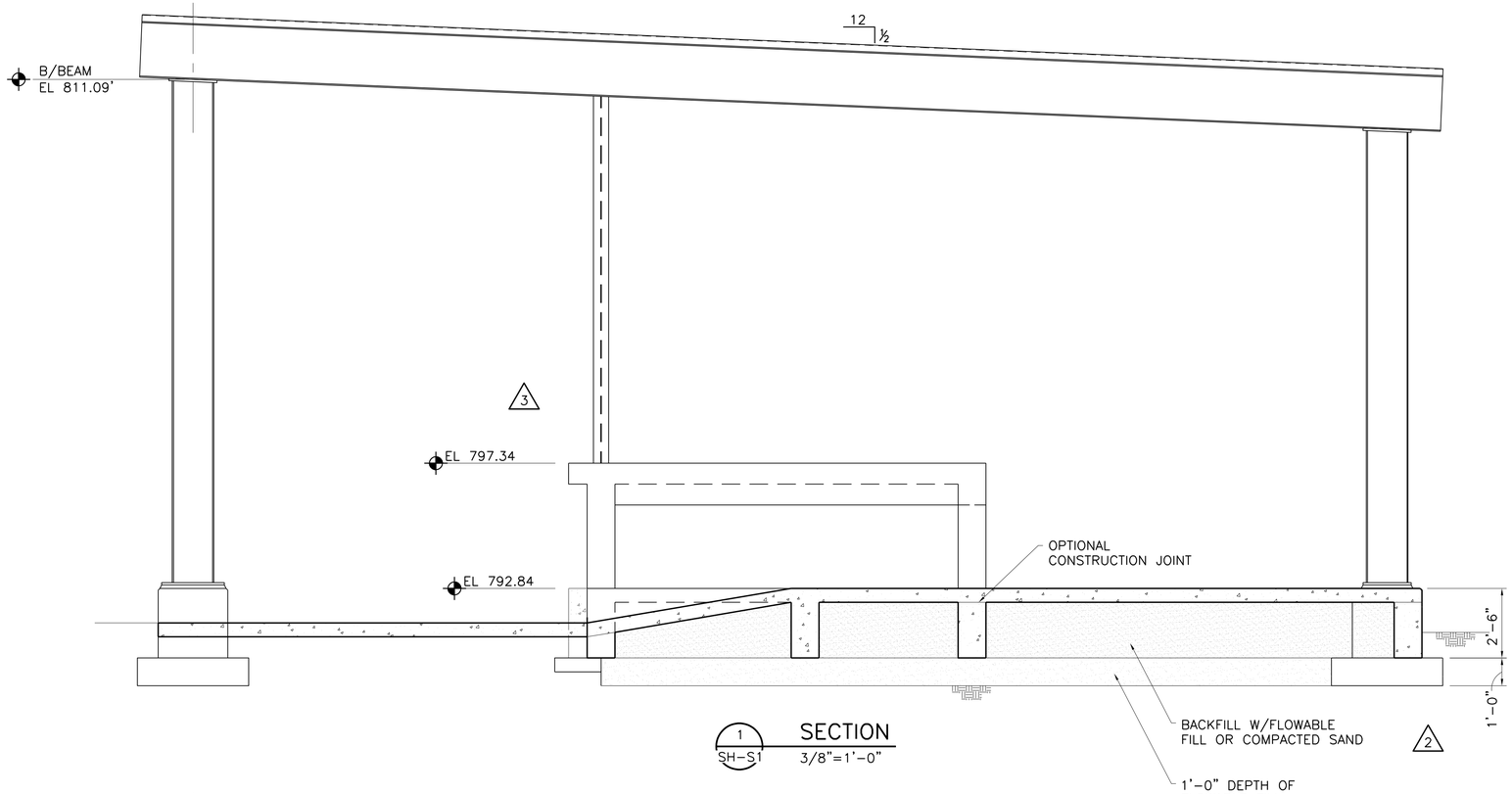

1 SH-S1 **SECTION** 3/8"=1'-0"

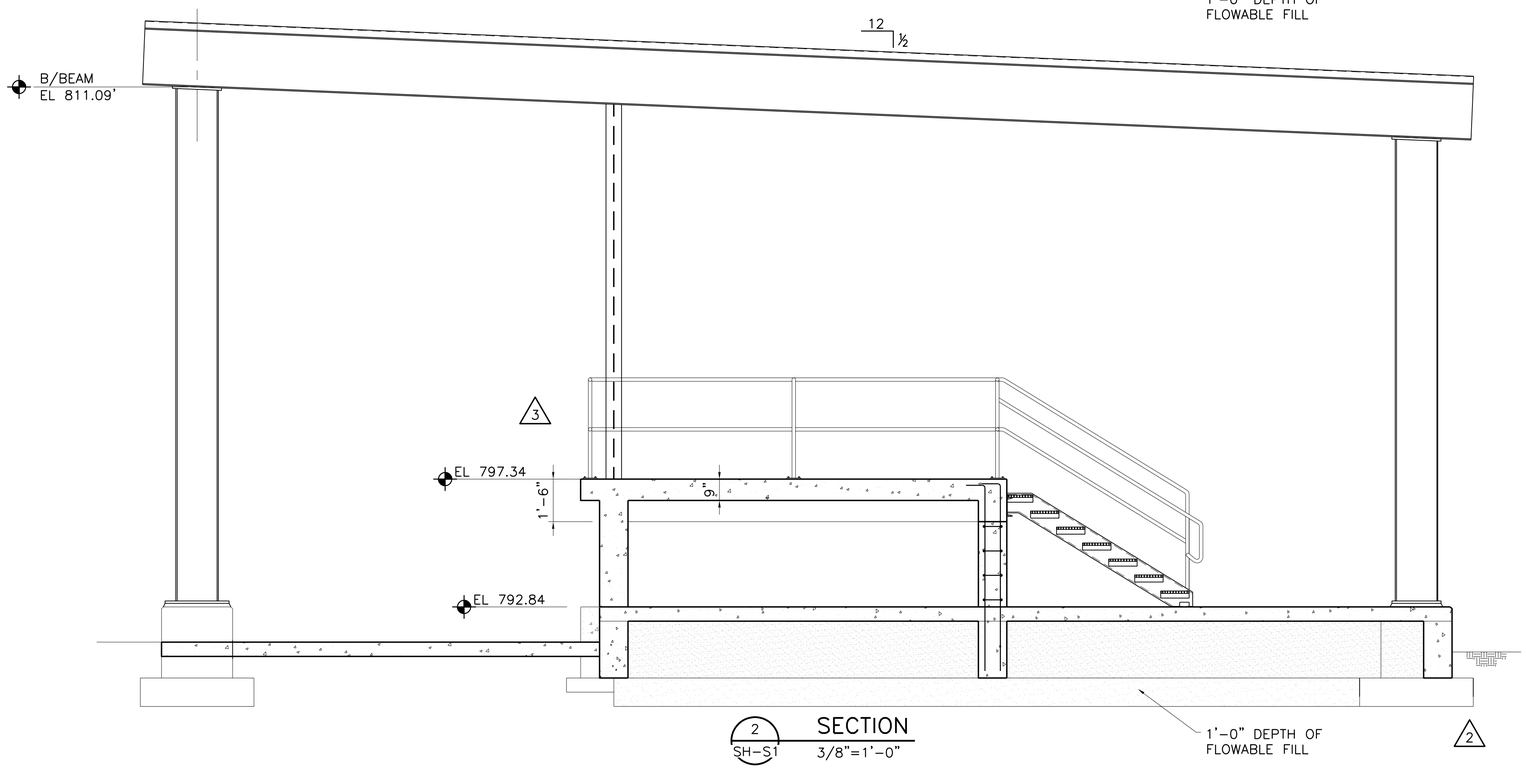

2 SH-S1 **SECTION** 3/8"=1'-0"

0 1' 2' 4'
3/8"=1'-0

This Record Drawing is a combination of the sealed engineering contract drawings for this project, modified by information furnished by the contractor reflecting changes in the Project made during construction. The original signed drawings are on file at the offices of
FREESE AND NICHOLS, INC.
RECORD DRAWINGS PREPARED ON:
6/24/2020

Freese and Nichols, Inc.
Texas Registered Engineering Firm F-2144

THE SEAL APPEARING ON THIS DOCUMENT WAS AUTHORIZED BY JAMES L. WHITTENBURG, P.E.
TEXAS NO. 92201 DATE: 7/17/2017
IT IS NOT TO BE USED FOR BIDDING OR CONSTRUCTION PURPOSES. THE RESPONSIBILITY FOR THE ACCURACY AND SUITABILITY OF THE INFORMATION RESIDES SOLELY WITH THE PROFESSIONAL(S) WHO AFFIXED THEIR SEAL(S) AND NOT WITH THE FIRM(S) LISTED HEREON. ANY UNAUTHORIZED ALTERATION OF THE RESPONSIBILITY ENTRUSTED TO FREESE UNDER THE TEXAS ENGINEERING PRACTICE ACT.

FREESE NICHOLS
4040 Broadway Street, Suite 600
San Antonio, Texas 78209-6350
Phone (210) 826-3800
Fax (210) 298-3801
Web - www.freese.com

CITY OF CASTROVILLE

WWTP CAPACITY EXPANSION PROJECT

STRUCTURAL

SOLIDS HANDLING - SCREW PRESS BUILDING SECTIONS

F&N JOB NO. CVL14259

NO.	ISSUE	BY	DATE
1	RECORD DRAWING	MRR	06/24/20
2	PCM NO. 2	MRR	07/03/17
1	RFI NO.5	MRR	1/13/17
1	ISSUED FOR CONSTRUCTION	MRR	11/16/16

DATE 6/10/16
DESIGNED MRR
DRAWN JAW/JLM
CHECKED AD
FILE NAME ST-SHS-SC-BLDG01.dwg

VERIFY SCALE Bar is one inch on original drawing. If not one inch on this sheet, adjust scale.
0 1"

SHEET SH-S2
SEQ.

ACAD Rel: 21.0s (LMS Tech)
Filename: N:\ST\ST-SHS-SC-BLDG01.dwg
Last Saved: 6/17/2020 1:51 PM Saved By: 02198

Plot Date: 6/18/2020 11:18 AM Plot By: 02198 Filename: N:\ST\ST-SHS-SC-BLDG01.dwg

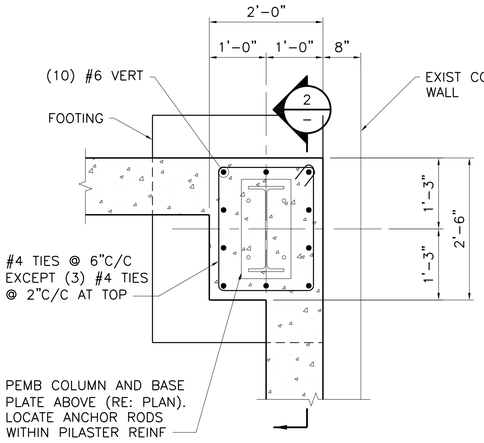

1 SH-S1 PLAN SECTION
3/4"=1'-0"

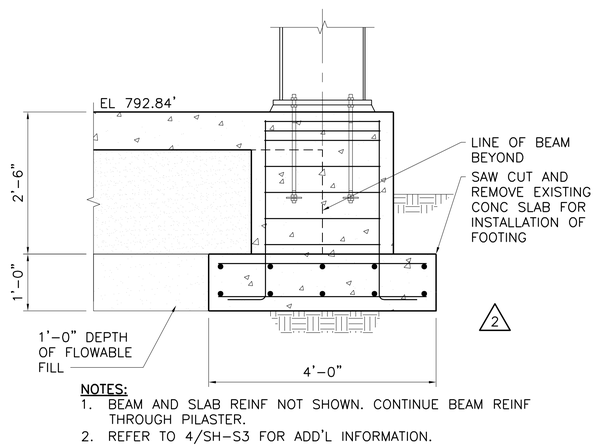

NOTES:
1. BEAM AND SLAB REINF NOT SHOWN. CONTINUE BEAM REINF THROUGH PILASTER.
2. REFER TO 4/SH-S3 FOR ADD'L INFORMATION.

2 – SECTION
3/4"=1'-0"

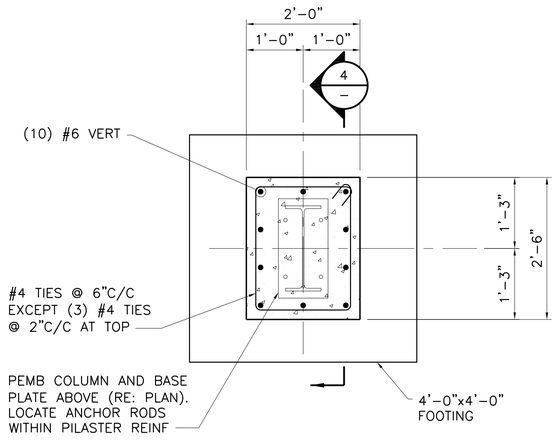

3 SH-S1 PLAN SECTION
3/4"=1'-0"

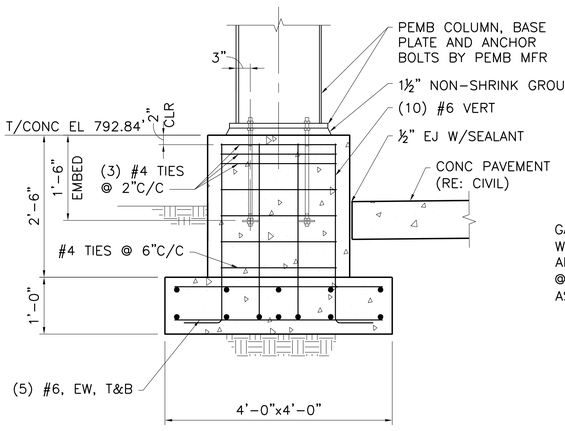

4 – SECTION
3/4"=1'-0"

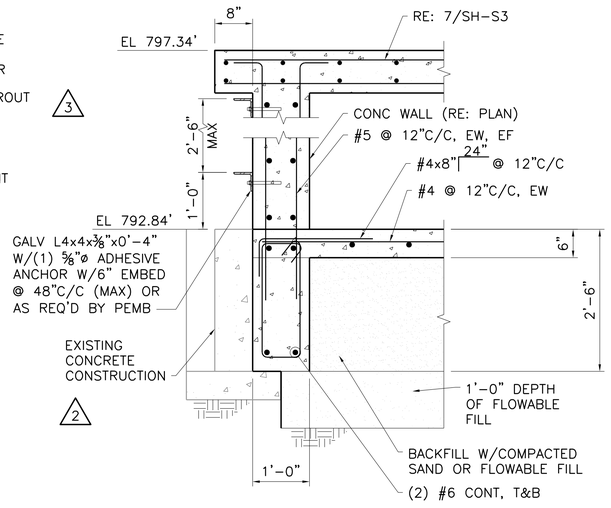

5 SH-S1 SECTION
3/4"=1'-0"

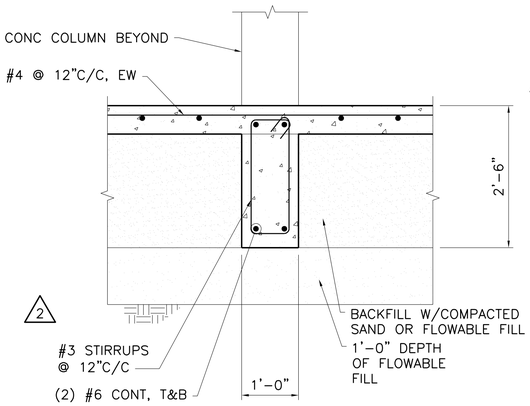

6 SH-S1 SECTION
3/4"=1'-0"

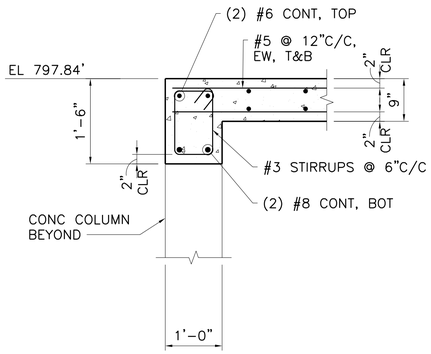

7 SH-S1 SECTION
3/4"=1'-0"

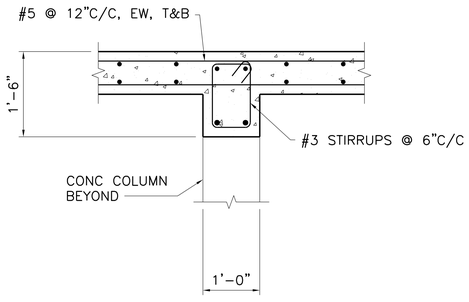

8 SH-S1 SECTION
3/4"=1'-0"

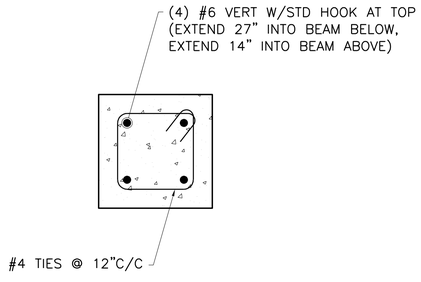

9 – COLUMN SECTION
1 1/2"=1'-0"

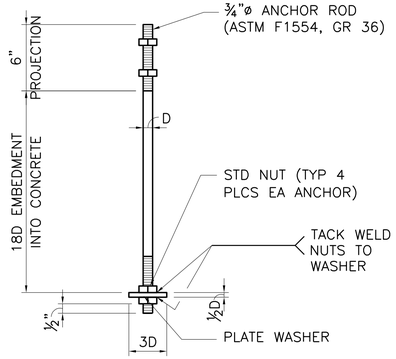

DETAIL NOTES:
1. DO NOT WELD NUT TO ANCHOR ROD.
2. ALL ELEMENTS SHALL BE HOT-DIPPED GALVANIZED.

10 – ANCHOR ROD DETAIL
NOT TO SCALE

0 4" 8" 1'
1-1/2"=1'-0"

0 6" 1' 2'
3/4"=1'-0

This Record Drawing is a combination of the sealed engineering contract drawings for this project, modified by information furnished by the contractor reflecting changes in the Project made during construction. The original sealed drawings are on file at the offices of FREESE AND NICHOLS, INC.
RECORD DRAWINGS PREPARED ON: 6/24/2020

THE SEAL APPEARING ON THIS DOCUMENT WAS AUTHORIZED BY JAMES A. LEMMON, P.E. TEXAS NO. 92201 DATE: 7/22/2021
IT IS NOT TO BE USED FOR BIDDING, PERMITTING, REGULATORY APPROVAL, CONSTRUCTION, OR RECORDED AS PART OF THE RECORD DRAWINGS. IT IS RELEASED UNDER THE TEXAS ENGINEERING PRACTICE ACT.

Freese and Nichols, Inc.
Texas Registered Engineering Firm F-2144

FREESE NICHOLS
4040 Broadway Street, Suite 600
San Antonio, Texas 78209-6350
Phone - (210) 829-3800
Fax - (210) 298-3801
Web - www.freese.com

CITY OF CASTROVILLE

WWTP CAPACITY EXPANSION PROJECT

STRUCTURAL

SOLIDS HANDLING - SCREW PRESS FOUNDATION SECTIONS AND DETAILS

NO.	ISSUE	BY	DATE
3	RECORD DRAWING	MRR	06/24/20
2	PCM NO. 2	MRR	07/03/17
1	RFI NO. 5	MRR	1/12/17
0	ISSUED FOR CONSTRUCTION	MRR	11/16/16

FAN JOB NO. CVL14259
DATE 6/10/16
DESIGNED MRR
DRAWN JAW/JLM
REVISED -
CHECKED AD
FILE NAME ST-SHS-DT-CONC01.dwg

VERIFY SCALE Bar is one inch on original drawing. If not one inch on this sheet, adjust scale.
0 1"

SHEET SH-S3
SEQ.

ACAD Rel: 21.0s (LMS Tech)
Filename: N:\ST\ST-SHS-DT-CONC01.dwg
Last Saved: 6/17/2020 1:53 PM Saved By: 02198

Plot Date: 6/18/2020 11:19 AM Plot By: 02198 Filename: N:\ST\ST-SHS-DT-CONC01.dwg

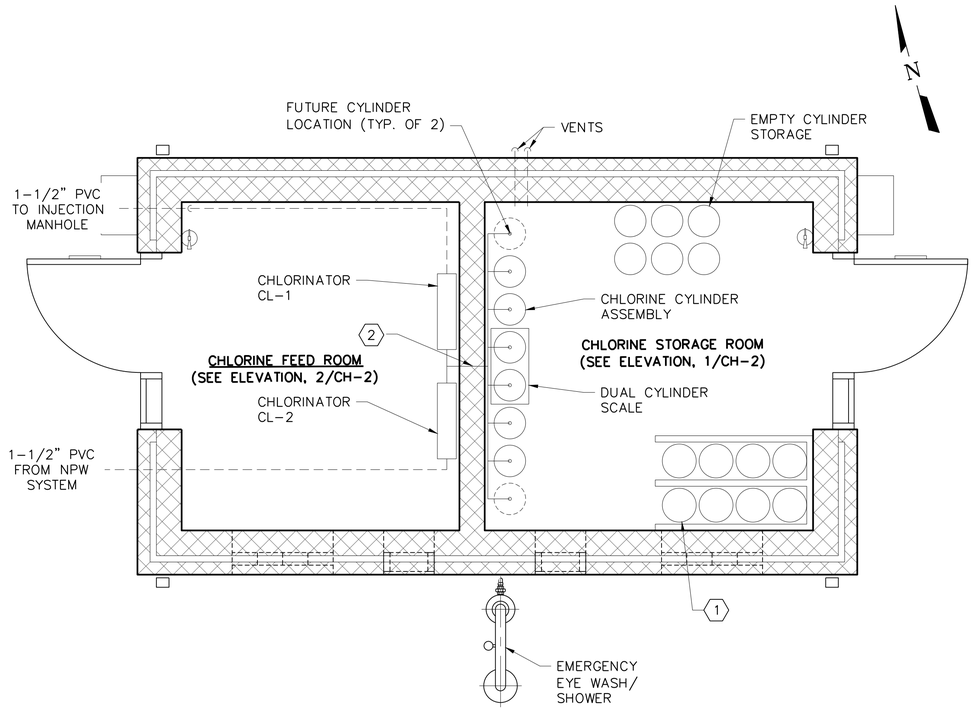

NOTES BY SYMBOLS "(X)"

(1) NEW CYLINDER STORAGE RACK SHALL BE CAPABLE OF STORING 8 FULL 150-LB CHLORINE CYLINDERS AND SHALL BE EQUIPPED WITH WELDED STORAGE CHAINS FOR SECURING EACH CYLINDER. THE CYLINDER STORAGE RACK SHALL BE MODEL #BR2X4FS BY USA SAFETY OR APPROVED EQUAL.

(2) PROVIDE 1/2" COMPRESSIBLE FILLER AROUND PIPE THROUGH PENETRATION WITH SEALANT ALL AROUND.

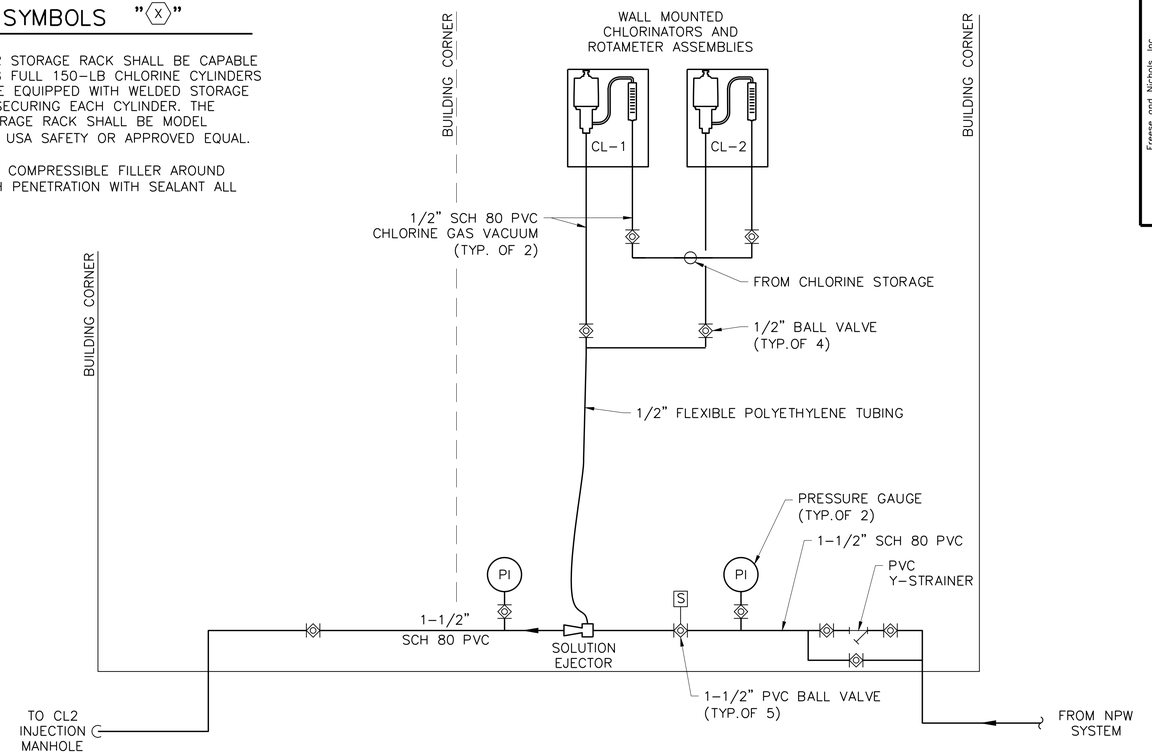

2 CH-1 **CHLORINE FEED ROOM ELEVATION**
NOT TO SCALE

1 CH-1 **CHLORINE BUILDING FLOOR PLAN**
1/2" = 1'-0"

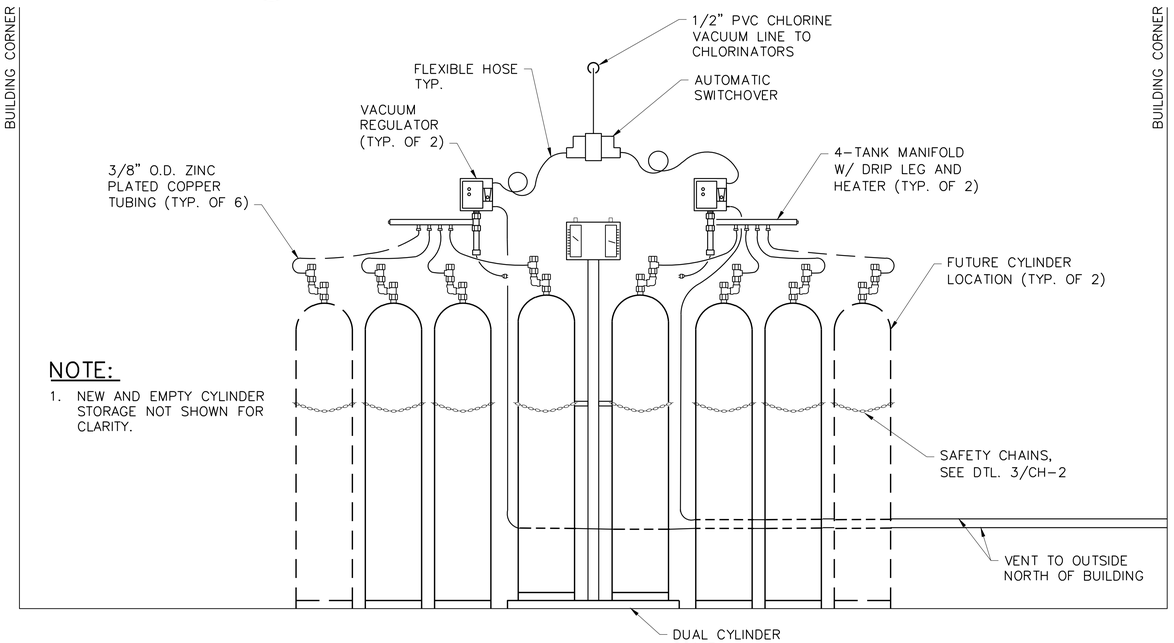

3 CH-1 **CHLORINE STORAGE ROOM ELEVATION**
NOT TO SCALE

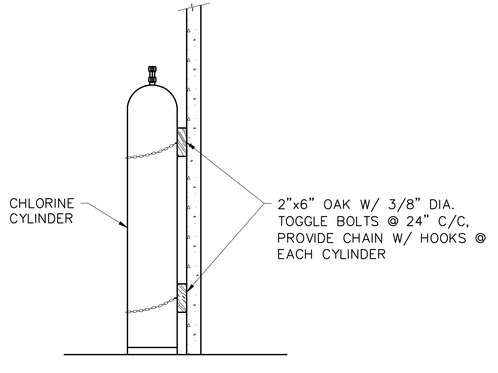

4 CH-1 **SAFETY CHAIN DETAIL**
NOT TO SCALE

This Record Drawing is a combination of the sealed engineering contract drawings for this project, modified by information furnished by the contractor reflecting changes in the Project made during construction. The original sealed drawings are on file at the offices of
FREESE AND NICHOLS, INC.
RECORD DRAWINGS PREPARED ON: 06/24/20

NOTES:

1. ALL INTERIOR PVC PIPING SHALL BE WALL MOUNTED AS NEEDED PER DETAIL 340/TYPE R.
2. ALL PVC PIPING PENETRATIONS THROUGH FLOOR SLAB SHALL BE PER DETAIL 342/TYPE E.
3. PLACE ALL GAS DETECTORS 1'-0" ABOVE FINISHED FLOOR ELEVATION.
4. SEE ELECTRICAL SHEETS FOR HEAT TRACING.

Freese and Nichols, Inc.
Texas Registered Engineering Firm F-2144

THE SEAL (NA) ORIGINALLY APPEARED ON THIS DOCUMENT WAS AUTHORIZED BY (NAME) ON (DATE). IT MAY NOT BE USED TO VERIFY ANY ALTERATION OR ADDITION TO A PREVIOUSLY SEALED DOCUMENT WITHOUT PROPER AUTHORIZATION AND PROPER DESIGNATION OF ANY ADDITIONAL SEALED ENTITIES. IT IS A VIOLATION OF LAW FOR ANY PERSON TO ALTER THIS DOCUMENT IN ANY WAY WITHOUT PROPER AUTHORIZATION AND PROPER DESIGNATION OF ANY ADDITIONAL SEALED ENTITIES. ANY PERSON ALTERING THIS DOCUMENT IN ANY WAY WITHOUT PROPER AUTHORIZATION AND PROPER DESIGNATION OF ANY ADDITIONAL SEALED ENTITIES IS SUBJECT TO PENALTIES IMPOSED UNDER THE TEXAS ENGINEERING PRACTICE ACT

FREESE NICHOLS
4040 Broadway Street, Suite 600
San Antonio, Texas 78209-6350
Phone - (210) 829-3500
Fax - (210) 841-7401
Web - www.freese.com

CITY OF CASTROVILLE

WWTP CAPACITY EXPANSION PROJECT

MECHANICAL

CHLORINE BUILDING ELEVATIONS AND DETAILS

F&N JOB NO.	CVL14259		
DATE	6/10/16	DESIGNED	CCG
		DRAWN	DDH
		CHECKED	TWS
FILE NAME	WW-CHL-DT-CHEM01.dwg		

NO.	ISSUE	BY	DATE
	RECORD DRAWINGS	CCG	06/24/20
1	ISSUED FOR CONSTRUCTION	CCG	11/16/16

VERIFY SCALE Bar is one inch on original drawing. If not one inch on this sheet, adjust scale.
0" 1"

SHEET CH-M1
SEQ.

ACAD Rel: 21.0s (LMS Tech)
Filename: N:\WW\Drawings\WW-CHL-DT-CHEM01.dwg
Last Saved: 10/8/2019 3:49 PM Saved By: 03576

Plot Date: 6/18/2020 5:47 PM Plot By: 90119 Filename: N:\WW\Drawings\WW-CHL-DT-CHEM01.dwg

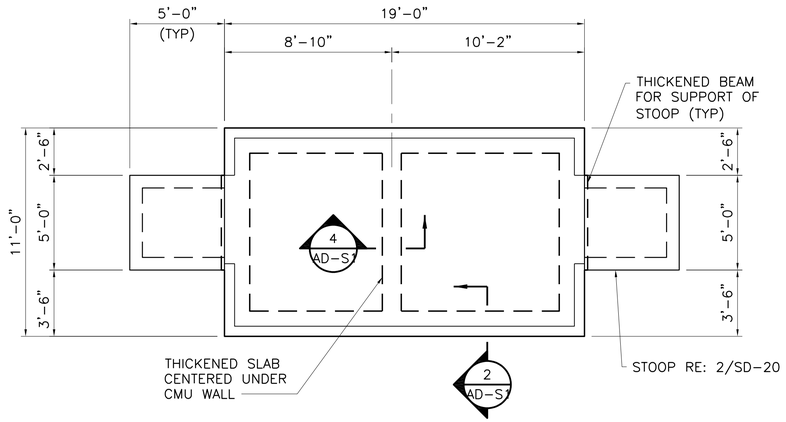

FOUNDATION PLAN NOTES:
1. FINISH FLOOR ELEVATION = 771.50'
2. COORDINATE VENEER LEDGE WITH ARCHITECTURAL.

NORTH 1 FOUNDATION PLAN
1/4"=1'-0"

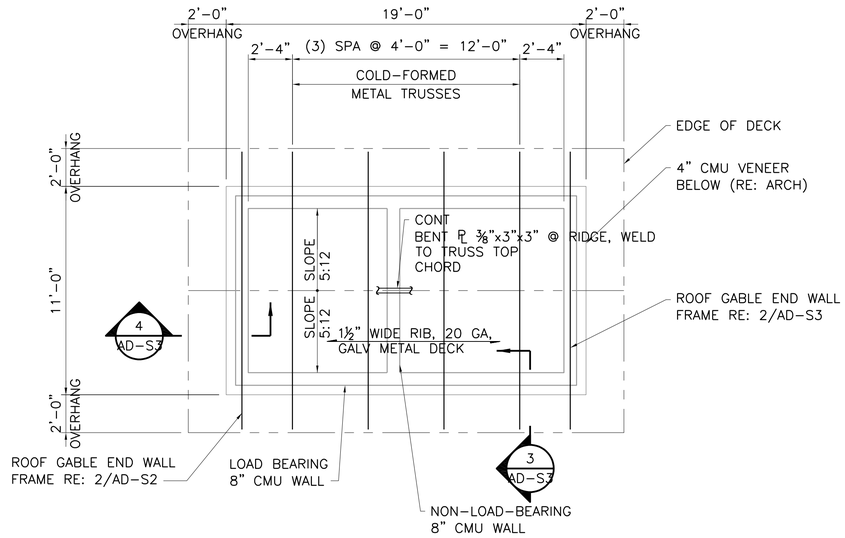

NORTH 2 ROOF FRAMING PLAN
1/4"=1'-0"

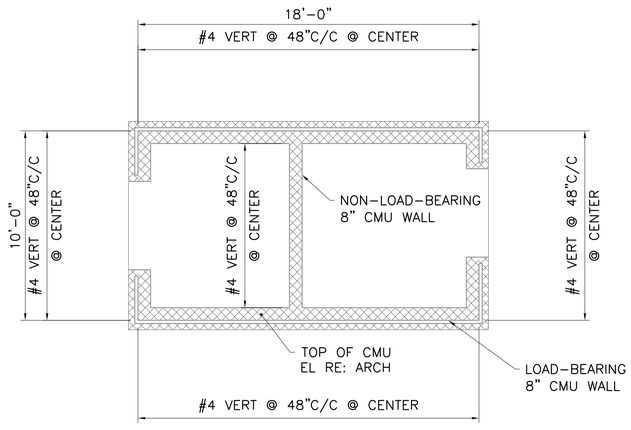

CMU PLAN NOTES:
1. REFER TO TYPICAL CMU DETAILS, SHEET SD-22.
2. NOT ALL OPENINGS ARE SHOWN, COORDINATE WITH ARCHITECTURAL AND OTHER DISCIPLINES FOR ADDITIONAL PENETRATION LOCATIONS. COORDINATE ALL REQUIRED PENETRATIONS PRIOR TO SUBMITTING SHOP DRAWINGS AND SHOW ALL OPENINGS AND APPLICABLE REINFORCING ON SHOP DRAWINGS.
3. CJ = CONTROL JOINT IN 8" REINFORCED CMU WALL. REFER TO ARCHITECTURAL DRAWINGS FOR CONTROL JOINTS IN 4" CMU VENEER.
4. REINFORCING SHOWN IS TYPICAL. COORDINATE WITH OPENINGS, CORNERS, INTERSECTIONS, AND CONTROL JOINTS. PROVIDE ADDITIONAL REINFORCING AS REQUIRED BY DETAILS ON SHEET SD-22.

NORTH 3 CMU WALL LAYOUT AND REINFORCING PLAN
1/4"=1'-0"

0 1' 2' 4' 8'
1/4"=1'-0"

This Record Drawing is a combination of the sealed engineering contract drawings for this project, modified by information furnished by the contractor reflecting changes in the Project made during construction. The original sealed drawings are on file at the offices of
FREESE AND NICHOLS, INC.
RECORD DRAWINGS PREPARED ON:
6/24/2020

Freese and Nichols, Inc.
Texas Registered Engineering Firm F-2144

THE SEAL APPEARING ON THIS DOCUMENT WAS AUTHORIZED BY JAMES L. MCCLENDON, P.E.
TEXAS NO. 92201
DATE: 6/18/2020
IT IS A VIOLATION OF THE TEXAS ENGINEERING PRACTICE ACT FOR ANY PERSON, UNLESS ACTING UNDER THE DIRECTION OF A LICENSED ENGINEER, TO ALTER THIS DOCUMENT IN ANY WAY. ANY ALTERATION OF THIS DOCUMENT BY ANY PERSON OTHER THAN THE RESPONSIBLE ENGINEER OR HIS DESIGNEE IS IN VIOLATION OF THE LAW.

FREESE NICHOLS
4040 Broadway Street, Suite 600
San Antonio, Texas 78209-6350
Phone - (210) 829-3800
Fax - (210) 298-3801
Web - www.freese.com

CITY OF CASTROVILLE

WWTP CAPACITY EXPANSION PROJECT

STRUCTURAL

CHLORINE BUILDING PLANS AND SECTION

FAN JOB NO. CVL14259
DATE 6/10/16
DESIGNED MRR
DRAWN JLM
CHECKED AD
FILE NAME ST-CHL-PL-FNDN.dwg

NO.	ISSUE	BY	DATE
	RECORD DRAWING	MRR	06/24/20
1	ISSUED FOR CONSTRUCTION	MRR	11/16/16

VERIFY SCALE Bar is one inch on original drawing. If not one inch on this sheet, adjust scale.
0 1"

SHEET CH-S1
SEQ.

ACAD Rel: 21.0s (LMS Tech)
Filename: N:\ST\ST-CHL-PL-FNDN.dwg
Last Saved: 6/18/2020 10:59 AM Saved By: 02198

Plot Date: 6/18/2020 11:19 AM Plot By: 02198 Filename: N:\ST\ST-CHL-PL-FNDN.dwg

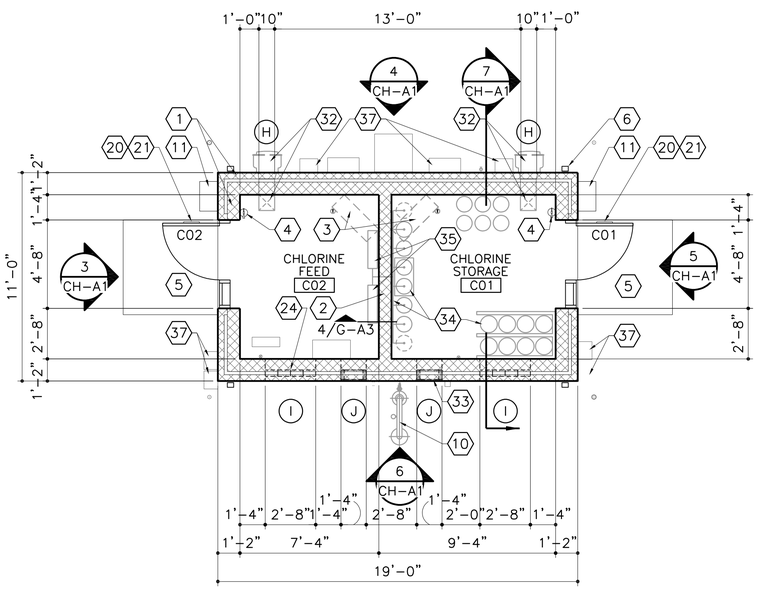

3 CH-A1 FLOOR PLAN
1/4"=1'-0"

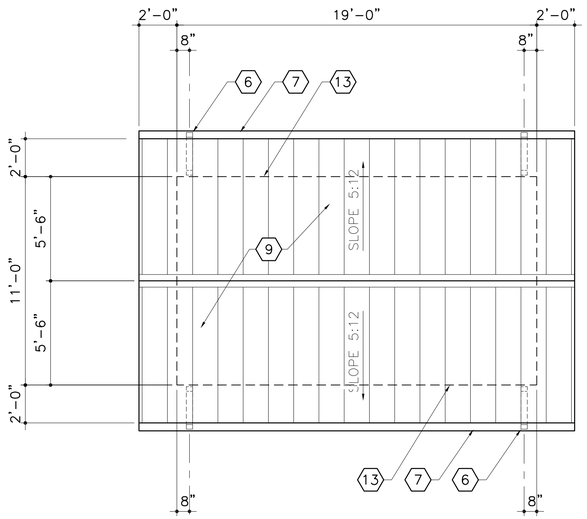

2 CH-A1 ROOF PLAN
1/4"=1'-0"

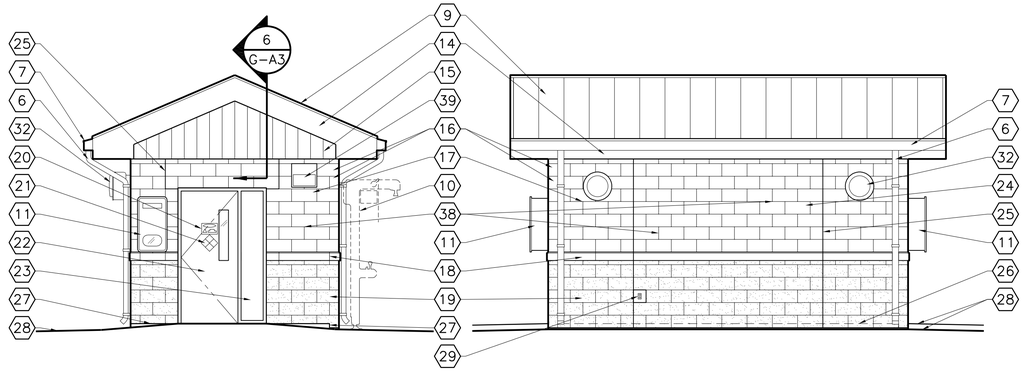

3 CH-A1 WEST ELEVATION
1/4"=1'-0"

4 CH-A1 NORTH ELEVATION
1/4"=1'-0"

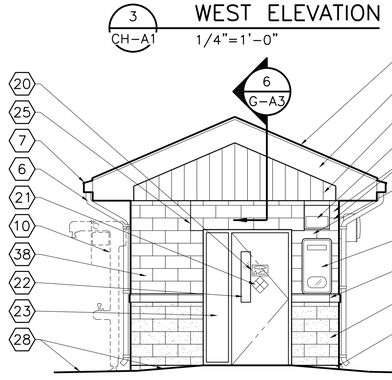

5 CH-A1 EAST ELEVATION
1/4"=1'-0"

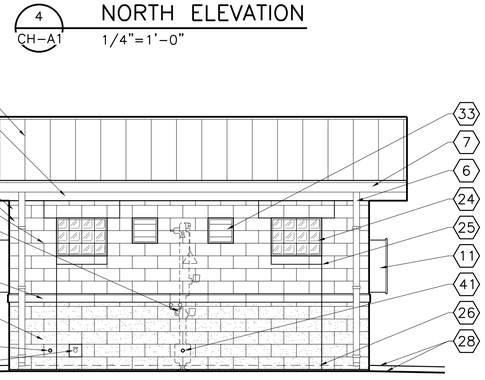

6 CH-A1 SOUTH ELEVATION
1/4"=1'-0"

NOTES BY SYMBOL "⬡"

1. 8" CMU STRUCTURAL WALL (RE: STRUCTURAL), AIR BARRIER, 1½" RIGID INSULATION, AIR SPACE, AND 4" WYTHE OF SPLIT FACE AND SMOOTH FACE CMU VENEER, TYPICAL. RE: ELEVATIONS, SHEET AD-A3.
2. 8" CMU WALL UP TO 109'-1⅜" WITH 1 HOUR RATED METAL STUD AND GYPSUM BOARD PONY WALL UP TO ROOF, RE: 4/G-A3.
3. MECHANICAL EQUIPMENT ABOVE, RE: HVAC.
4. FIRE EXTINGUISHER AND BRACKET.
5. CONCRETE LANDING AT EXTERIOR DOORS. SLOPE AWAY FROM BUILDING AT ¼"/FT. MAXIMUM.
6. PREFINISHED ALUMINUM DOWNSPOUT, TYPICAL.
7. PREFINISHED ALUMINUM GUTTER.
8. PREFINISHED METAL SOFFIT PANELS, EVERY 4TH PANEL PERFORATED.
9. 4" THICK STANDING SEAM INSULATED ALUMINUM ROOF PANELS.
10. COMBINATION EMERGENCY EYE WASH AND SHOWER, RE: PLUMBING.
11. FIBERGLASS SCBA (SELF CONTAINED BREATHING APPARATUS) CABINET – THOMAS PRODUCTS INC. MODEL APB-35 OR APPROVED EQUAL. SCBA MASK AND CYLINDER PROVIDED AND INSTALLED BY OWNER.
12. THROUGH-WALL BASE FLASHING.
13. EXTERIOR FACE OF WALL BELOW.
14. PREFINISHED ALUMINUM FASCIA.
15. PREFINISHED INSULATED ALUMINUM WALL PANELS.
16. L-SHAPED CMU CORNER UNITS CUT-DOWN TO 1'-2"x6', TYPICAL ALL CORNERS.
17. INTEGRAL COLOR SMOOTH FACE CMU RUNNING BOND VENEER.
18. CAST STONE WATER TABLE OR SILL, RE: 2/G-A3.
19. INTEGRAL COLOR SPLIT FACE CMU RUNNING BOND VENEER.
20. OSHA COMPLIANT WARNING SIGN, RE: SHEET G-A1.
21. 7½"x7½" PAINTED METAL NFPA 704 (DIAMOND) WARNING SIGN.
22. ALUMINUM FRAME AND ALUMINUM DOOR WITH FRP FACE AND VISION PANEL, TYPICAL. RE: DOOR SCHEDULE.
23. FIXED ALUMINUM DOOR PANEL WITH FRP FACE.
24. GLASS BLOCK WINDOW, TYPICAL. RE: OPENINGS SCHEDULE.
25. CONTROL JOINT, TYPICAL.
26. FINISH FLOOR BEYOND, TYPICAL.
27. FOUNDATION LEDGE STEPS UP NEAR DOORS, RE: STRUCTURAL.
28. CONCRETE WALK, RE: CIVIL.
29. RECEPTACLE CENTERED ON 8"x8" SQUARE OF SMOOTH FACE CMU, RE: 5/G-A4 AND ELECTRICAL.
30. COLD FORMED METAL ROOF FRAMING.
31. METAL STUD PONY WALL UP TO BOTTOM OF ROOF PANELS: 1½" RIGID INSULATION, AIR BARRIER, ½" GYPSUM SHEATHING, 6" METAL STUDS WITH 5½" THERMAL BATT INSULATION, ⅝" GYPSUM BOARD.
32. MECHANICAL EXHAUST FAN AND DUCTWORK DOWN TO NEAR FLOOR, TYPICAL. RE: HVAC AND OPENINGS SCHEDULE.
33. ALUMINUM LOUVER TYPICAL, RE: HVAC AND OPENINGS SCHEDULE.
34. CHLORINE CYLINDERS, RACK AND PIPING, TYPICAL. RE: MECHANICAL.
35. CHLORINE INJECTION EQUIPMENT, RE: MECHANICAL.
36. MASONRY LEDGE, TYPICAL. RE: STRUCTURAL AND 3/G-A3.
37. ELECTRICAL EQUIPMENT.
38. ELECTRICAL EQUIPMENT ON WALL THIS AREA (NOT SHOWN), RE: ELECTRICAL FOR SIZE AND MOUNTING HEIGHTS.
39. LIGHT FIXTURE, RE: ELECTRICAL.
40. WALL HYDRANT OR HOSE BIBB ON 8" SQUARE OF SMOOTH FACE CMU, RE: 6/G-A4 AND PLUMBING.
41. PIPE THROUGH WALL (DOES NOT NEED TO BE ON SMOOTH FACE CMU IF WITHOUT ESCUTCHEON), RE: 6/G-A4 (SIMILAR) AND PLUMBING.

GENERAL NOTES

1. REFER TO SHEET G-A1 FOR CODE DATA AND GENERAL NOTES THAT APPLY TO THIS SHEET.

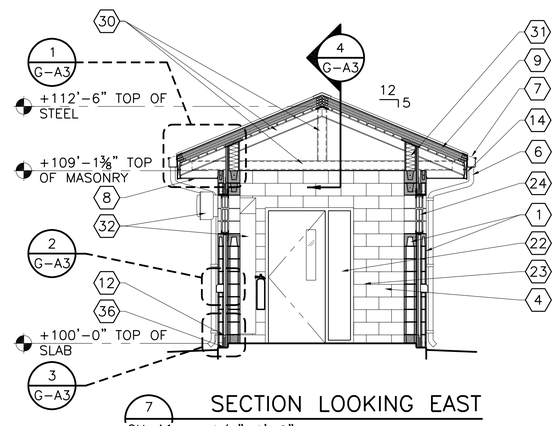

7 CH-A1 SECTION LOOKING EAST
1/4"=1'-0"

This Record Drawing is a combination of the sealed engineering contract drawings for this project, modified by information furnished by the contractor reflecting changes in the Project made during construction. The original sealed drawings are on file at the offices of
FREESE AND NICHOLS, INC.
RECORD DRAWINGS PREPARED ON:
06/24/2020

0 1' 2' 4' 8'
1/4"=1'-0"

Freese and Nichols, Inc.
Texas Registered Engineering Firm F-2144

THE SEAL THAT ORIGINALLY APPEARED ON THIS DOCUMENT WAS AUTHORIZED BY:
PARRIS K. JONES
TEXAS NO. 119268 ON DATE: 11/15/2016
ALTERATION OF A SEALED DOCUMENT WITHOUT PROPER NOTIFICATION OF THE RESPONSIBLE ARCHITECT IS AN OFFENSE UNDER THE TEXAS BOARD OF ARCHITECTURAL EXAMINERS' PRACTICE ACT.

FREESE NICHOLS
4040 Broadway Street, Suite 600
San Antonio, Texas 78209-6350
Phone - (210) 829-3800
Fax - (210) 829-3901
Web - www.freese.com

CITY OF CASTROVILLE
WWTP CAPACITY EXPANSION PROJECT
ARCHITECTURE
CHLORINE BUILDING
PLANS, ELEVATIONS AND SECTION

FAN JOB NO.	CVL14259		
DATE	6/10/16		
DESIGNED	PKJ		
DRAWN	NEL		
CHECKED	JWW		
REVISED	-		
FILE NAME	Ar-Chl-Pl-Flor.dwg		

NO.	ISSUE	BY	DATE
1	RECORD DRAWINGS	NEL	06/24/20

VERIFY SCALE Bar is one inch on original drawing. If not one inch on this sheet, adjust scale.

SHEET CH-A1
SEQ. .

ACAD Rel: 21.0s (LMS Tech)
Filename: N:\ARC\Ar-Chl-Pl-Flor.dwg
Last Saved: 6/22/2020 11:51 AM Saved By: nel

Plot Date: 6/22/2020 12:01 PM Plot By: nel Filename: N:\ARC\Ar-Chl-Pl-Flor.dwg

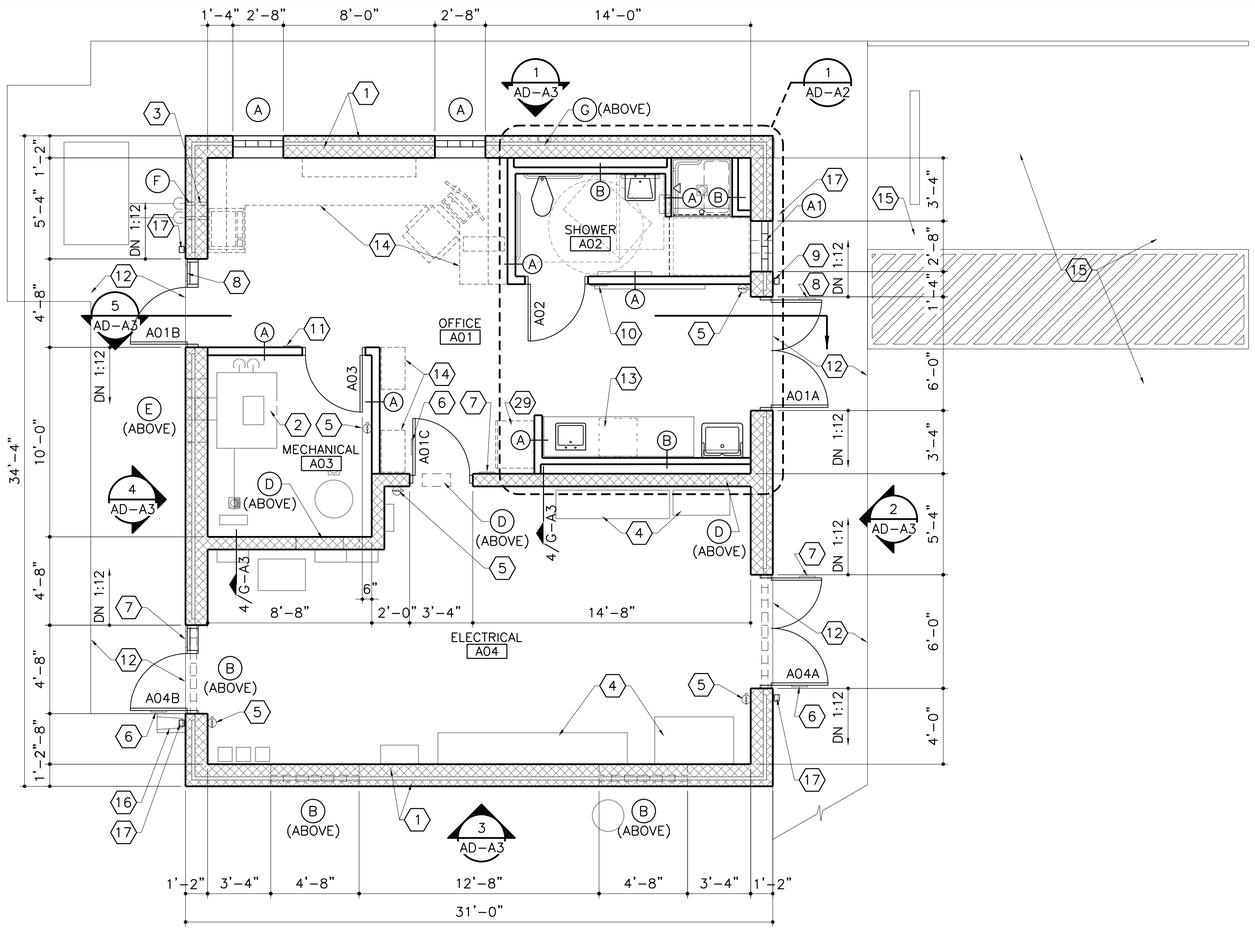

1 AD-A1 FLOOR PLAN
1/4"=1'-0"

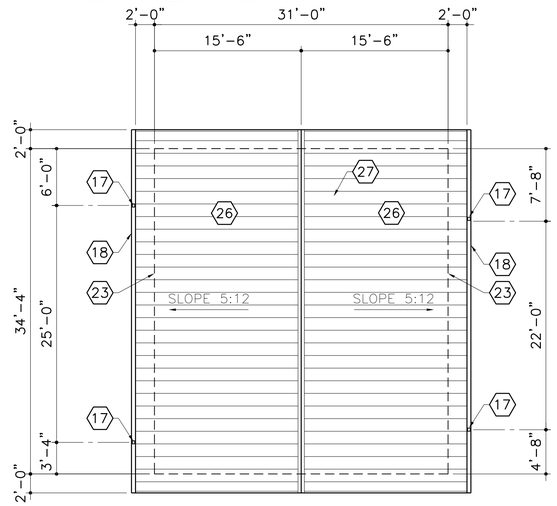

3 AD-A1 ROOF PLAN
1/8"=1'-0"

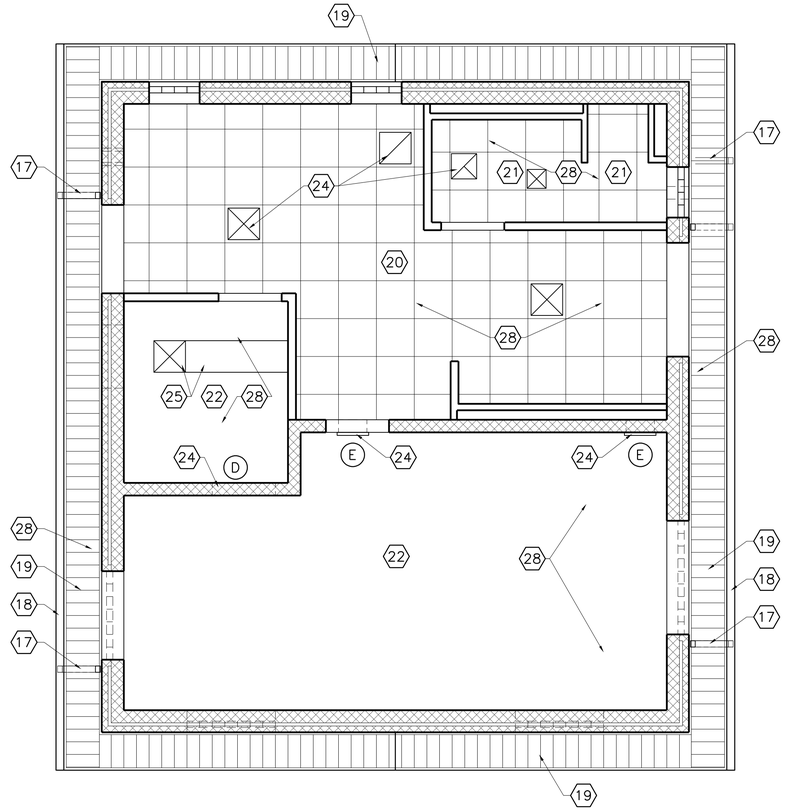

2 AD-A1 REFLECTED CEILING PLAN
1/4"=1'-0"

NOTES BY SYMBOL "⬡"

1. 8" CMU STRUCTURAL WALL (RE: STRUCTURAL), AIR BARRIER, 1½" RIGID INSULATION, AIR SPACE, AND 4" WYTHE OF SPLIT FACE AND SMOOTH FACE CMU VENEER, TYPICAL. RE: ELEVATIONS, SHEET AD-A3.
2. MECHANICAL EQUIPMENT, RE: HVAC.
3. MECHANICAL REFRIGERANT PIPING THROUGH WALL, RE: OPENING SCHEDULE.
4. ELECTRICAL EQUIPMENT, TYPICAL. RE: ELECTRICAL.
5. FIRE EXTINGUISHER AND BRACKET.
6. OSHA COMPLIANT SIGNAGE "DANGER HIGH VOLTAGE" – RE: SHEET G-A1
7. ACCESSIBLE SIGNAGE "DANGER HIGH VOLTAGE" – RE: SHEET G-A1.
8. ACCESSIBLE SIGNAGE "ENTRANCE" RE: SHEET G-A1.
9. ACCESSIBLE PARKING SIGNAGE ALIGNED WITH CENTER OF PARKING SPACE, RE: SHEET G-A1.
10. ACCESSIBLE RESTROOM SIGNAGE, RE: SHEET G-A1.
11. ACCESSIBLE SIGNAGE, "MECHANICAL ROOM". RE: SHEET G-A1.
12. CONCRETE LANDING AT EXTERIOR DOORS. SLOPE AWAY FROM BUILDING AT ¼"/FT. MAXIMUM.
13. LABORATORY COUNTERTOP WITH CABINETS BELOW, RE: SHEET AD-A2.
14. FURNISHINGS PROVIDED AND INSTALLED BY OWNER.
15. CONCRETE VAN ACCESSIBLE PARKING SPACE, STRIPED ACCESS AISLE AND WHEEL STOP. MAXIMUM SLOPE ¼"/FT AWAY FROM BUILDING WITH NO CROSS SLOPE. THE ACCESS AISLE IS AT THE SAME LEVEL, AND IS FLUSH WITH THE DOOR LANDING AND WALK. RE: SHEETS C-11 AND SD-10. (DIMENSIONS ARE TO CENTER OF STRIPES.)
16. CONCRETE SPLASH BLOCK.
17. PREFINISHED METAL DOWNSPOUT, TYPICAL.
18. PREFINISHED METAL GUTTER.
19. PREFINISHED METAL SOFFIT PANELS, EVERY 4TH PANEL PERFORATED.
20. ACOUSTICAL PANEL CEILING AT 9'-0" AFF.
21. FRP PANEL CEILING AT 8'-0" AFF.
22. EXPOSED STRUCTURE (NO CEILING).
23. EXTERIOR FACE OF WALL BELOW..
24. MECHANICAL DEVICE TYPICAL, RE: HVAC.
25. MECHANICAL DUCTWORK, RE: HVAC.
26. STANDING SEAM INSULATED ALUMINUM ROOF PANELS.
27. VENT THROUGH ROOF, RE: 9/G-A4.
28. LIGHT FIXTURE, TYPICAL. RE: ELECTRICAL.
29. REFRIGERATOR PROVIDED BY OWNER, INSTALLED BY CONTRACTOR.
30. WALK SLOPES DOWN FROM LANDING AT 1:12, TYPICAL. RE: SHEET C-11.
31. CURB AT LANDING AND RAMP, RE: SHEET SD-18.

GENERAL NOTES

1. REFER TO SHEET AD-A2 FOR ARCHITECTURAL FINISHES.
2. REFER TO SHEET G-A4 FOR PARTITION TYPES.

This Record Drawing is a combination of the sealed engineering contract drawings for this project, modified by information furnished by the contractor reflecting changes in the Project made during construction. The original sealed drawings are on file at the offices of FREESE AND NICHOLS, INC.
RECORD DRAWINGS PREPARED ON: 06/24/2020

0 4' 8' 16'
1/8"=1'-0"
0 1' 2' 4' 8'
1/4"=1'-0"

Freese and Nichols, Inc.
Texas Registered Engineering Firm F-2144

THE SEAL THAT ORIGINALLY APPEARED ON THIS DOCUMENT WAS AUTHORIZED BY:
PARRIS K. JONES
TEXAS NO: 19268 ON DATE: 11/15/2016
ALTERATION OF A SEALED DOCUMENT WITHOUT PROPER NOTIFICATION OF THE RESPONSIBLE ARCHITECT IS AN OFFENSE UNDER THE TEXAS BOARD OF ARCHITECTURAL EXAMINERS' PRACTICE ACT.

FREESE NICHOLS
4040 Broadway Street, Suite 600
San Antonio, Texas 78209-6350
Phone - (210) 824-3600
Fax - (210) 298-3801
Web - www.freese.com

CITY OF CASTROVILLE
WWTP CAPACITY EXPANSION PROJECT
ARCHITECTURE
ADMINISTRATION BUILDING FLOOR, ROOF AND CEILING PLANS

FNI JOB NO.	CVL14259
DATE	6/10/16
DESIGNED	PKJ
DRAWN	NEL
CHECKED	JWW
REVISED	.
FILE NAME	Ar-Adm-Pl-Flor.dwg

NO.	ISSUE	BY	DATE
1	RECORD DRAWINGS	NEL	06/24/20

VERIFY SCALE Bar is one inch on original drawing. If not one inch on this sheet, adjust scale.
0 1"

SHEET AD-A1
SEQ. .

ACAD Rel: 21.0s (LMS Tech)
Filename: N:\ARC\Ar-Adm-Pl-Flor.dwg
Last Saved: 6/22/2020 11:44 AM Saved By: nel

Plot Date: 6/22/2020 11:59 AM Plot By: nel Filename: N:\ARC\Ar-Adm-Pl-Flor.dwg

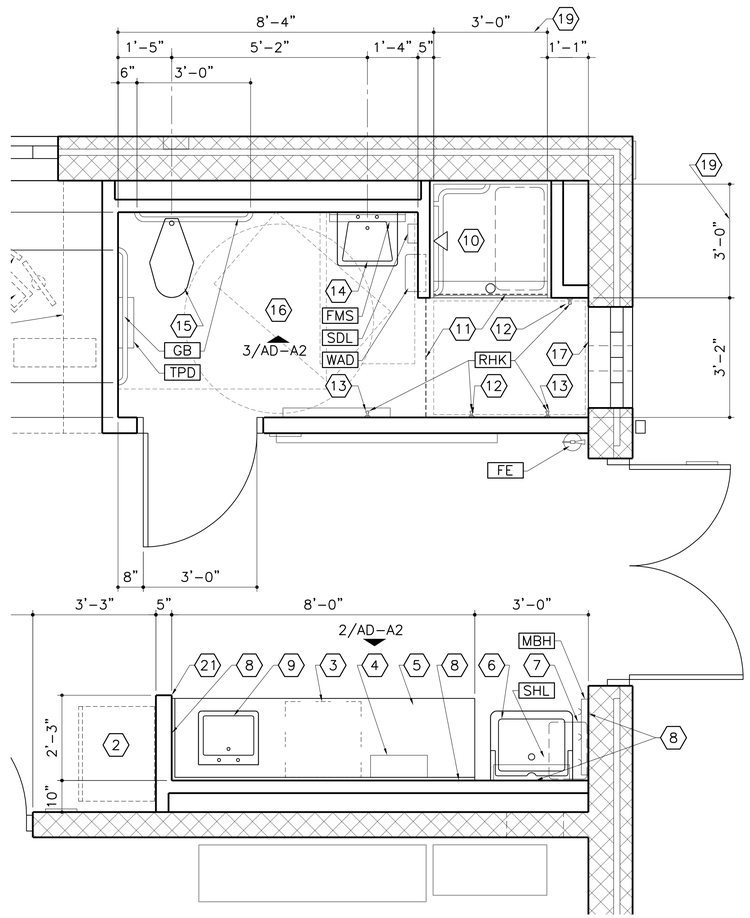

TRUE NORTH

PLAN NORTH

1 AD-A2 ENLARGED PARTIAL FLOOR PLAN

1/2"=1'-0"

NOTES BY SYMBOL "⬡"

1. FURNISHINGS AND RELATED EQUIPMENT PROVIDED AND INSTALLED BY OWNER.
2. REFRIGERATOR WITH ICE MAKER FURNISHED BY OWNER, INSTALLED BY CONTRACTOR.
3. BUILT-IN UNDER COUNTER DISHWASHER PROVIDED AND INSTALLED BY CONTRACTOR – ELECTROLUX EI24ID50QS OR OWNER APPROVED EQUAL.
4. 18"x7"x21" (NOMINAL) WALL MOUNTED WIRE BOTTLE DRYING RACK – THOMAS SCIENTIFIC MODEL 1222J84 OR OWNER APPROVED EQUAL.
5. LABORATORY COUNTERTOP AND SPLASH WITH CABINETS BELOW.
6. SERVICE SINK, RE: PLUMBING.
7. PORTABLE MOP BUCKET BELOW, PROVIDED BY OWNER.
8. DECORATIVE FIBERGLASS REINFORCED WALL PANEL FINISH FROM COUNTERTOP TO CEILING, AND FROM FLOOR TO CEILING AT SERVICE SINK.
9. TAS COMPLIANT SINK, RE: PLUMBING AND 7/G-A4.
10. 36"x36" (CLEAR INSIDE DIMENSION) TAS COMPLIANT ONE PIECE SHOWER WITH OPTIONAL ACCESSORIES, RE: PLUMBING, SHEET G-A1. PLACE SHOWER UNIT IN ROOM PRIOR TO INSTALLATION OF DOOR FRAME.
11. SHOWER CURTAIN AND PRIVACY CURTAIN WITH ASSOCIATED RODS, RE: PLUMBING SHOWER ACCESSORIES.
12. ROBE HOOK AT ACCESSIBLE HEIGHT, RE: SHEET G-A1.
13. ROBE HOOK AT NORMAL HEIGHT, RE: SHEET G-A1.
14. ACCESSIBLE LAVATORY WITH PROTECTIVE GUARDS ON SUPPLY AND DRAIN PIPING, RE: PLUMBING AND SHEET G-A1.
15. ACCESSIBLE WATER CLOSET, RE: PLUMBING AND SHEET G-A1.
16. DECORATIVE FIBERGLASS REINFORCED WALL PANEL FINISH AT ALL METAL STUD PARTITIONS THIS ROOM.
17. PAINTED CMU FINISH THIS PORTION OF WALL.
18. RESILIENT BASE.
19. VERIFY ROUGH-IN DIMENSION WITH SHOWER MANUFACTURER.
20. VERIFY DIMENSION WITH DISHWASHER MANUFACTURER.
21. FRP CORNER TRIM.

ARCHITECTURAL FINISHES

1. STANDING SEAM ALUMINUM ROOF PANELS: FACTORY FINISH, COLOR TO MATCH MBCI COLOR "SILVER METALLIC".
2. UNDERSIDE OF ROOF DECKING: FACTORY GALVANIZED FINISH.
5. EXPOSED COLD FORMED METAL ROOF FRAMING: FACTORY GALVANIZED FINISH.
6. CEILING AT OFFICE A01: 24"x24" MINERAL FIBER ACOUSTICAL PANEL CEILING IN ALUMINUM GRID AT 9'-0" AFF – ARMSTRONG ULTIMA COLOR WHITE.
7. CEILING AT SHOWER A02: 24"x24" FRP PANEL CEILING IN ALUMINUM SUSPENDED GRID AT 8'-0" AFF.
8. INTERIOR EXPOSED SURFACES OF MASONRY WALLS: PAINT FINISH – SHERWIN WILLIAMS SIMPLE WHITE 7021.
9. EXPOSED SURFACES OF INTERIOR GYPSUM BOARD METAL STUD PARTITIONS: PAINT FINISH – SHERWIN WILLIAMS SIMPLE WHITE 7021, EXCEPT WHERE DECORATIVE FIBERGLASS REINFORCED WALL PANELS ARE INDICATED.
10. EXTERIOR MASONRY SURFACES AND MORTAR: INTEGRAL COLOR AND ARE NOT PAINTED – HEADWATERS CMU COLOR LIMESTONE CREAM; MORTAR COLOR TO MATCH.
11. FIBERGLASS REINFORCED POLYESTER (FRP) DOOR AND ALUMINUM FRAME SYSTEM: CECO COLORS LIGHT GRAY DOORS AND CLEAR ANODIZED FRAMES.
12. ALL FLOORS AT ADMINISTRATION AND CHLORINE BUILDINGS ARE CONCRETE FLOOR SLAB: SMOOTH TROWEL FINISH WITH CLEAR SEALER AT BOTH FLOOR SLAB AND HOUSEKEEPING PADS.
13. INSULATED ALUMINUM EXTERIOR WALL PANELS: FACTORY FINISH , COLOR TO MATCH MBCI COLOR "REGAL GRAY".
14. ALUMINUM FASCIA, TRIM, SOFFIT PANELS, GUTTERS AND DOWNSPOUTS: FACTORY FINISH TO MATCH ROOF COLOR.
15. ALUMINUM LOUVERS: CLEAR ANODIZED FINISH.
16. METAL STUD PARTITIONS AT SHOWER A02: PEBBLE TEXTURE DECORATIVE FIBERGLASS REINFORCED WALL PANELS ON MOISTURE AND MOLD RESISTANT GYPSUM BOARD – MARLITE STANDARD COLOR P-100 WHITE CLASS A.
17. BASE AT OFFICE A01, SHOWER A02, AND MECHANICAL A03: RESILIENT FLOOR BASE – JOHNSONITE COLOR 28 MEDIUM GREY CG.

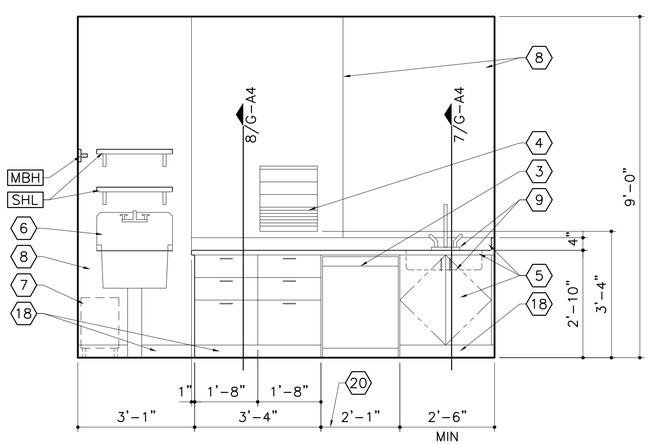

2 AD-A2 ELEVATION AT OFFICE A01

1/2"=1'-0"

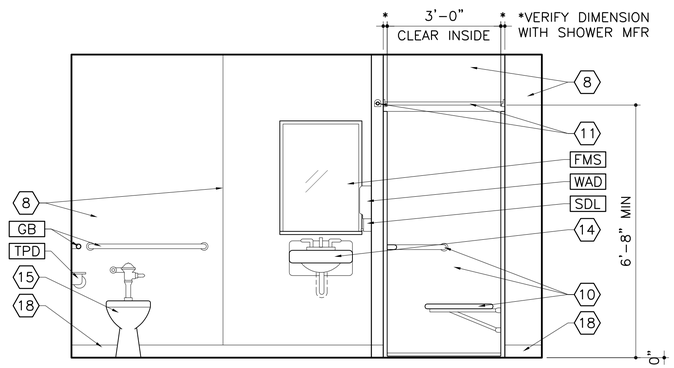

3 AD-A2 ELEVATION AT SHOWER A02

1/2"=1'-0"

GENERAL NOTES

1. REFER TO SHEET G-A1 FOR ACCESSORY, EQUIPMENT AND PLUMBING FIXTURE MOUNTING HEIGHTS.

This Record Drawing is a combination of the sealed engineering contract drawings for this project, modified by information furnished by the contractor reflecting changes in the Project made during construction. The original sealed drawings are on file at the offices of FREESE AND NICHOLS, INC.
RECORD DRAWINGS PREPARED ON: 06/24/2020

0 1' 2' 4'
1/2"=1'-0"

Freese and Nichols, Inc.
Texas Registered Engineering Firm F-2144

THE SEAL THAT APPEARED ON THIS DOCUMENT WAS AUTHORIZED BY:
PARRIS K. JONES
TEXAS NO. 19268 ON DATE: 11/15/2016
ALTERATIONS OF A SEALED DOCUMENT WITHOUT PROPER NOTIFICATION OF THE RESPONSIBLE ARCHITECT IS AN OFFENSE UNDER THE TEXAS BOARD OF ARCHITECTURAL EXAMINERS' PRACTICE ACT.

FREESE NICHOLS

4040 Broadway Street, Suite 600
San Antonio, Texas 78209-6350
Phone - (210) 824-3600
Fax - (210) 298-3801
Web - www.freese.com

CITY OF CASTROVILLE

WWTP CAPACITY EXPANSION PROJECT

ARCHITECTURE

ADMINISTRATION BUILDING
ENLARGED PLAN AND INTERIOR ELEVATIONS

NO.	ISSUE	BY	DATE
1	RECORD DRAWINGS	NEL	06/24/20

VERIFY SCALE Bar is one inch on original drawing. If not one inch on this sheet, adjust scale.
0 1"

FAN JOB NO. CVL14259
DATE 6/10/16
DESIGNED PKJ
DRAWN NEL
CHECKED JWW
FILE NAME Ar-Adm-Pl-Enlg.dwg

SHEET AD-A2
SEQ.

ACAD Rel: 21.0s (LMS Tech)
Filename: N:\ARC\Ar-Adm-Pl-Enlg.dwg
Last Saved: 6/22/2020 11:45 AM Saved By: nel

Plot Date: 6/22/2020 12:00 PM Plot By: nel Filename: N:\ARC\Ar-Adm-Pl-Enlg.dwg

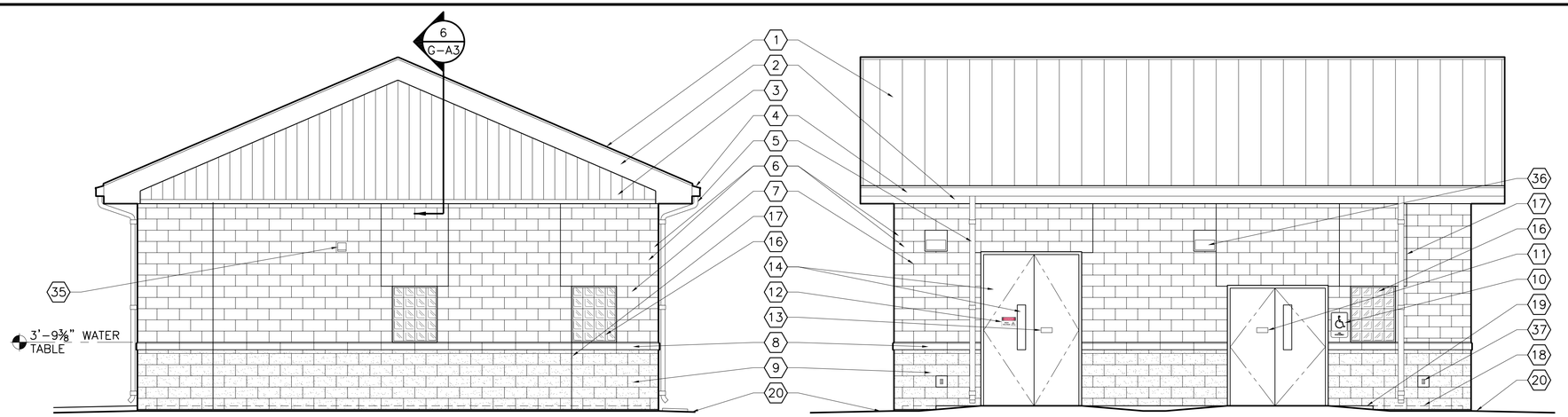

1 AD-A3 EAST ELEVATION
1/4"=1'-0"

2 AD-A3 SOUTH ELEVATION
1/4"=1'-0"

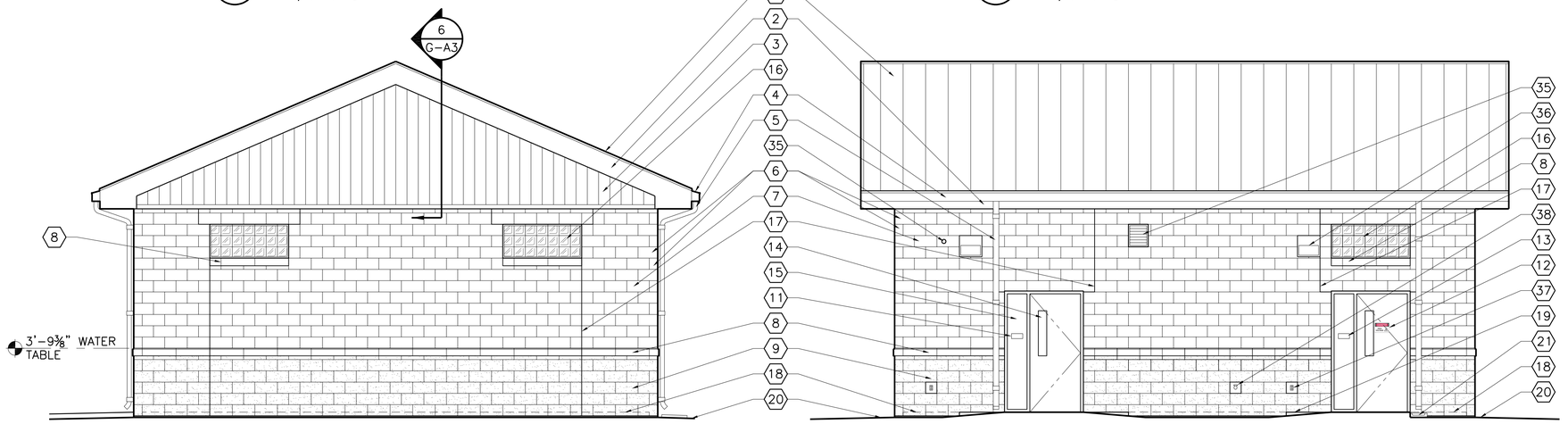

3 AD-A3 WEST ELEVATION
1/4"=1'-0"

4 AD-A3 NORTH ELEVATION
1/4"=1'-0"

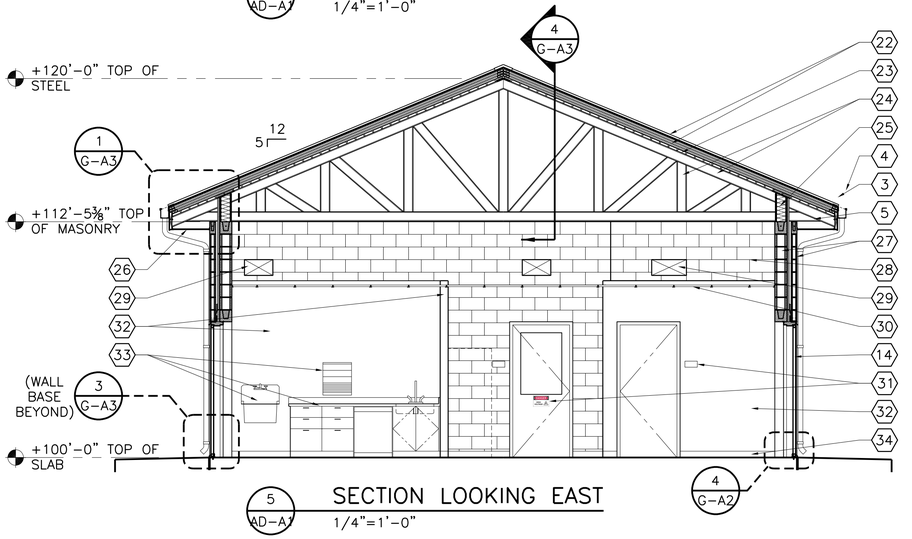

5 AD-A3 SECTION LOOKING EAST
1/4"=1'-0"

NOTES BY SYMBOL "⬡"

1. STANDING SEAM ALUMINUM ROOF PANELS.
2. PREFINISHED ALUMINUM FASCIA.
3. PREFINISHED ALUMINUM WALL PANELS.
4. PREFINISHED ALUMINUM GUTTER.
5. PREFINISHED ALUMINUM DOWNSPOUT.
6. L-SHAPED CMU CORNER UNITS CUT-DOWN TO 1'-2"x6" NOMINAL, TYPICAL ALL CORNERS.
7. INTEGRAL COLOR SMOOTH FACE CMU RUNNING BOND VENEER.
8. CAST STONE WATER TABLE OR SILL, RE: 2, 5/G-A3.
9. INTEGRAL COLOR SPLIT FACE CMU RUNNING BOND VENEER.
10. ACCESSIBLE PARKING SIGN, ALIGNED WITH CENTER OF ACCESSIBLE PARKING SPACE, RE: SHEET G-A1.
11. ACCESSIBLE ENTRANCE SIGN, RE: SHEET G-A1.
12. OSHA COMPLIANT WARNING SIGN, RE: SHEET G-A1.
13. ACCESSIBLE WARNING SIGN, RE: SHEET G-A1.
14. ALUMINUM FRAME AND ALUMINUM DOOR WITH FRP FACE AND GLASS VISION PANEL, TYPICAL. RE: DOOR SCHEDULE, SHEET G-A2.
15. FIXED ALUMINUM DOOR PANEL WITH FRP FACE.
16. GLASS BLOCK WINDOW, TYPICAL. RE: OPENINGS SCHEDULE SHEET G-A2.
17. CMU VENEER CONTROL JOINT, TYPICAL.
18. FINISH FLOOR BEYOND, TYPICAL.
19. FOUNDATION LEDGE STEPS UP NEAR DOORS, RE: STRUCTURAL AND 3/G-A3.
20. GRADE OR SIDEWALK.
21. CONCRETE SPLASH BLOCK.
22. STANDING SEAM ALUMINUM ROOF PANELS ON SLIP SHEET, ON ½" GYPSUM UNDERLAYMENT ON 4½" RIGID INSULATION INSTALLED IN TWO OR MORE LAYERS.
23. METAL ROOF DECK, RE: STRUCTURAL.
24. COLD FORMED METAL ROOF FRAMING, RE: STRUCTURAL.
25. METAL STUD PONY WALL UP TO BOTTOM OF ROOF PANELS: 1½" RIGID INSULATION, AIR BARRIER, ½" GYPSUM SHEATHING, 6" METAL STUDS WITH 5½" THERMAL BATT INSULATION, ⅝" GYPSUM BOARD.
26. PREFINISHED METAL SOFFIT PANELS, EVERY 4TH PANEL PERFORATED.
27. 8" CMU STRUCTURAL WALL (RE: STRUCTURAL), AIR BARRIER, 1½" RIGID INSULATION, AIR SPACE, AND 4" WYTHE OF SPLIT FACE AND SMOOTH FACE CMU VENEER, TYPICAL. RE: ELEVATIONS, SHEET AD-A3.
28. 8" CMU PARTITION BEYOND.
29. MECHANICAL OPENINGS, TYPICAL. RE: HVAC AND OPENINGS SCHEDULE.
30. ACOUSTICAL PANEL CEILING AT 9'-0" AFF, RE: 2/AD-A1.
31. SIGNAGE, RE: 1/AD-A1, AND SHEET G-A1.
32. GYPSUM BOARD PARTITION.
33. SERVICE SINK, MILLWORK AND EQUIPMENT, RE: ELEVATION 2/AD-A2.
34. RESILIENT BASE, TYPICAL.
35. MECHANICAL OPENING, RE: HVAC AND OPENING SCHEDULE.
36. LIGHT FIXTURE, TYPICAL. RE: 5/G-A4 AND ELECTRICAL.
37. RECEPTACLE CENTERED ON 8"x8" SQUARE OF SMOOTH FACE CMU, RE: 5/G-A4 AND ELECTRICAL.
38. WALL HYDRANT OR HOSE BIBB CENTERED ON 8" SQUARE OF SMOOTH FACE CMU, RE: 6/G-A4 AND PLUMBING.

GENERAL NOTE:

1. REFER TO STRUCTURAL FOR CONTROL JOINTS IN 8" NOMINAL CMU BACK-UP.

This Record Drawing is a combination of the sealed engineering contract drawings for this project, modified by information furnished by the contractor reflecting changes in the Project made during construction. The original sealed drawings are on file at the offices of
FREESE AND NICHOLS, INC.
RECORD DRAWINGS PREPARED ON:
06/24/2020

0 1' 2' 4' 8'
1/4"=1'-0"

Freese and Nichols, Inc.
Texas Registered Engineering Firm F-2144

THE SEAL THAT APPEARED ON THIS DOCUMENT WAS AUTHORIZED BY:
PARRIS K. JONES
TEXAS NO. 19268 ON DATE: 11/15/2016
ALTERATION OF A SEALED DOCUMENT WITHOUT PROPER NOTIFICATION OF THE RESPONSIBLE ARCHITECT IS AN OFFENSE UNDER THE TEXAS BOARD OF ARCHITECTURAL EXAMINERS' PRACTICE ACT.

FREESE NICHOLS
4040 Broadway Street, Suite 600
San Antonio, Texas 78209-6350
Phone - (210) 298-3800
Fax - (210) 298-3801
Web - www.freese.com

CITY OF CASTROVILLE
WWTP CAPACITY EXPANSION PROJECT
ARCHITECTURE
ADMINISTRATION BUILDING
ELEVATIONS AND SECTION

NO.	ISSUE	BY	DATE
1	RECORD DRAWINGS	NEL	06/24/20

VERIFY SCALE Bar is one inch on original drawing. If not one inch on this sheet, adjust scale.

FAN JOB NO. CVL14259
DATE 6/10/16
DESIGNED PKJ
DRAWN NEL
CHECKED JWW
FILE NAME Ar-Adm-El-Bldg.dwg

SHEET AD-A3
SEQ.

ACAD Rel: 21.0s (LMS Tech)
Filename: N:\ARC\Ar-Adm-El-Bldg.dwg
Last Saved: 6/22/2020 11:47 AM Saved By: nel

Plot Date: 6/22/2020 12:00 PM Plot By: nel Filename: N:\ARC\Ar-Adm-El-Bldg.dwg

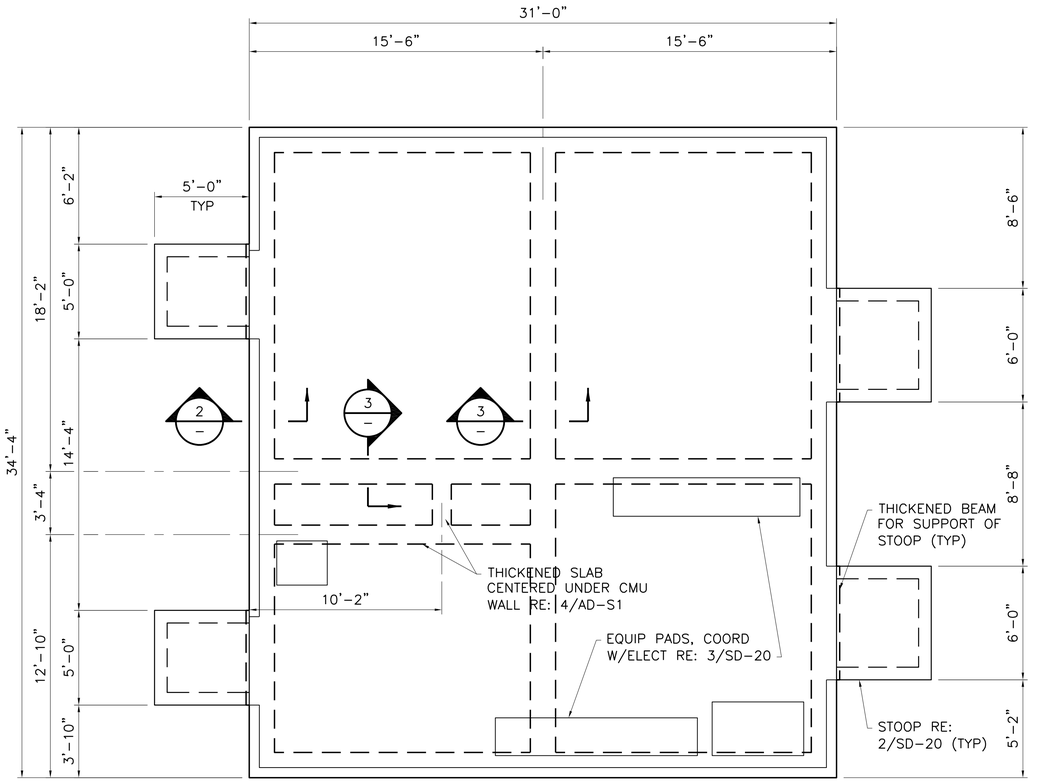

FOUNDATION PLAN NOTES:

1. FINISH FLOOR ELEVATION = 772.00'
2. COORDINATE VENEER LEDGE WITH ARCHITECTURE.

1 FOUNDATION PLAN
1/4"=1'-0"

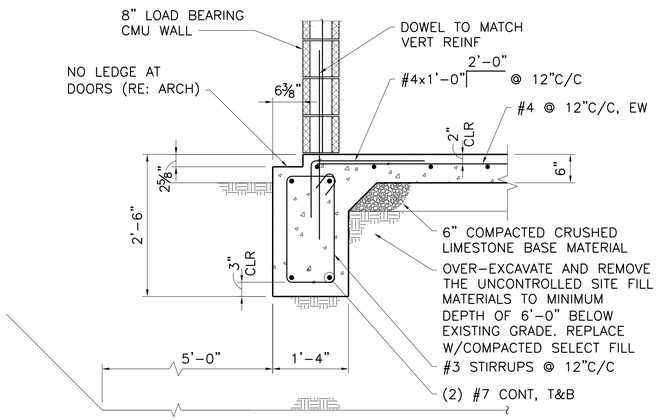

2 EXTERIOR BEAM SECTION
3/4"=1'-0"

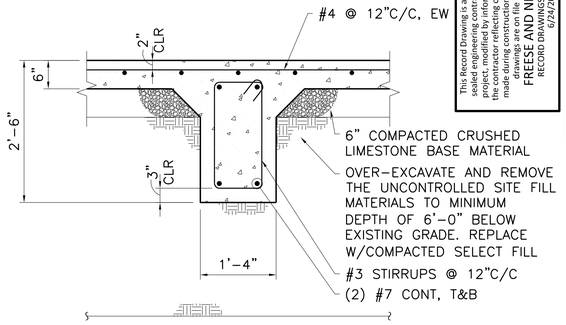

3 INTERIOR BEAM SECTION
3/4"=1'-0"

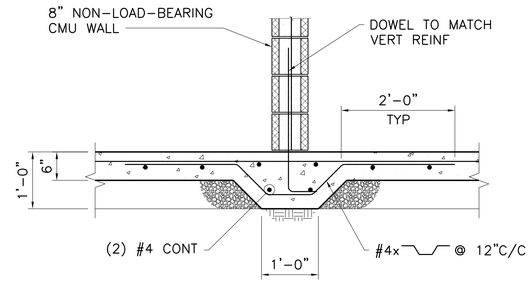

4 THICKENED SLAB AT NON-LOAD-BEARING CMU WALL SECTION
3/4"=1'-0"

0 6" 1' 2'
3/4"=1'-0

0 1' 2' 4' 8'
1/4"=1'-0"

This Record Drawing is a combination of the sealed engineering contract drawings for this project, modified by information furnished by the contractor reflecting changes in the Project made during construction. The contractor signed drawings are on file at the offices of
FREESE AND NICHOLS, INC.
RECORD DRAWINGS PREPARED ON:
6/24/2020

THE SEAL APPEARING ON THIS DOCUMENT WAS AUTHORIZED BY JOSEPH L. MARTINEZ, P.E. TEXAS NO. 92201 DATE: 6/24/2020
IT IS A VIOLATION OF THE TEXAS ENGINEERING PRACTICE ACT FOR ANY PERSON, UNLESS ACTING UNDER THE DIRECTION OF THE RESPONSIBLE ENGINEER, TO ALTER THIS DOCUMENT IN ANY WAY. ANY ENTITY VIOLATING THIS ACT MAY BE SUBJECT TO ENFORCEMENT ACTION BY THE TEXAS BOARD OF PROFESSIONAL ENGINEERS AND LAND SURVEYORS.

Freese and Nichols, Inc.
Texas Registered Engineering Firm F-2144

FREESE NICHOLS
4040 Broadway Street, Suite 600
San Antonio, Texas 78209-6350
Phone - (210) 829-3800
Fax - (210) 298-3801
Web - www.freese.com

CITY OF CASTROVILLE

WWTP CAPACITY EXPANSION PROJECT

STRUCTURAL

ADMINISTRATION BUILDING FOUNDATION PLAN AND SECTIONS

F&N JOB NO. CVL14259
DATE 6/10/16
DESIGNED MRR
DRAWN JLM
CHECKED AD
FILE NAME ST-ADM-PL-FNDN.dwg

NO.	ISSUE	BY	DATE
1	RECORD DRAWING	MRR	06/24/20
0	ISSUED FOR CONSTRUCTION	MRR	11/16/16

VERIFY SCALE Bar is one inch on original drawing. If not one inch on this sheet, adjust scale.
0 1"

SHEET
AD-S1
SEQ.

ACAD Rel: 21.0s (LMS Tech)
Filename: N:\ST\ST-ADM-PL-FNDN.dwg
Last Saved: 6/18/2020 11:01 AM Saved By: 02198

Plot Date: 6/18/2020 11:19 AM Plot By: 02198 Filename: N:\ST\ST-ADM-PL-FNDN.dwg

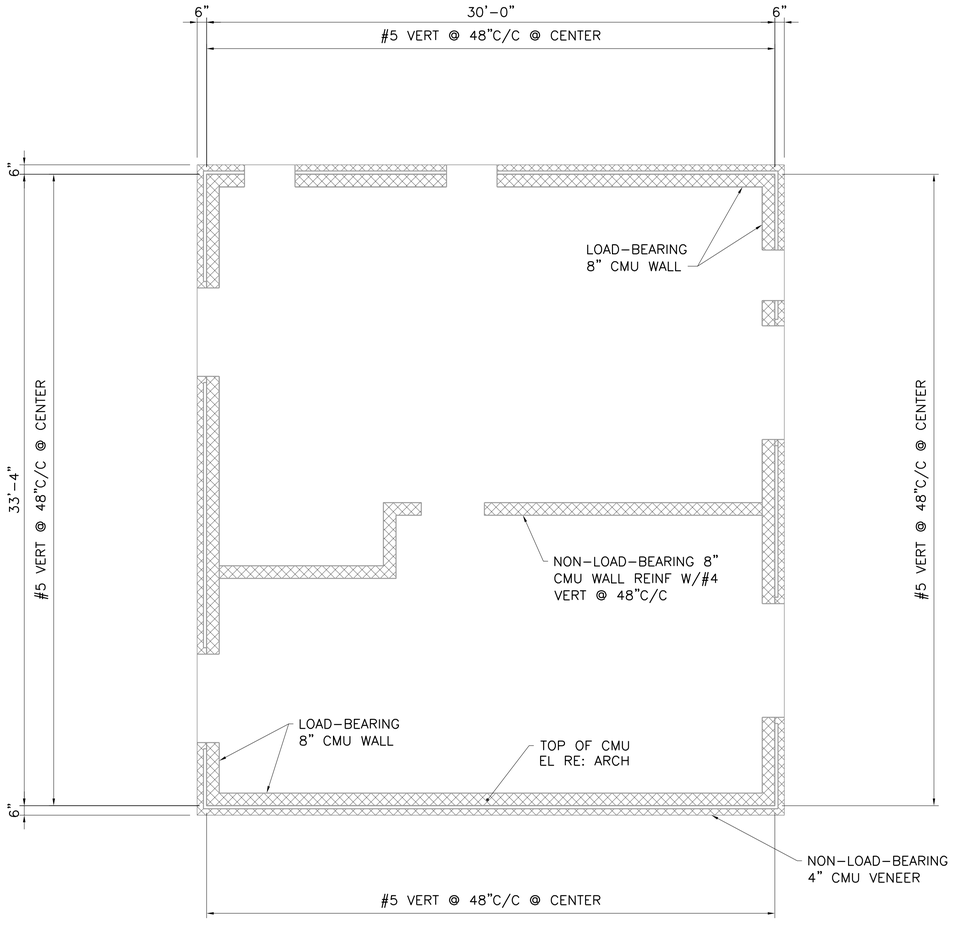

NORTH 1 CMU WALL LAYOUT AND REINFORCING PLAN

1/4"=1'-0"

CMU PLAN NOTES:

1. REFER TO TYPICAL CMU DETAILS, SHEET SD-22.
2. NOT ALL OPENINGS ARE SHOWN, COORDINATE WITH ARCHITECTURAL AND OTHER DISCIPLINES FOR ADDITIONAL PENETRATION LOCATIONS. COORDINATE ALL REQUIRED PENETRATIONS PRIOR TO SUBMITTING SHOP DRAWINGS AND SHOW ALL OPENINGS AND APPLICABLE REINFORCING ON SHOP DRAWINGS.
3. CJ = CONTROL JOINT IN 8" REINFORCED CMU WALL. REFER TO ARCHITECTURAL DRAWINGS FOR CONTROL JOINTS IN 4" CMU VENEER.
4. REINFORCING SHOWN IS TYPICAL. COORDINATE WITH OPENINGS, CORNERS, INTERSECTIONS, AND CONTROL JOINTS. PROVIDE ADDITIONAL REINFORCING AS REQUIRED BY DETAILS ON SHEET SD-22.

0 1' 2' 4' 8'
1/4"=1'-0"

This Record Drawing is a combination of the sealed engineering contract drawings for this project, modified by information furnished by the contractor reflecting changes in the Project made during construction. The original sealed drawings are on file at the offices of
FREESE AND NICHOLS, INC.
RECORD DRAWINGS PREPARED ON:
6/24/2020

Freese and Nichols, Inc.
Texas Registered Engineering Firm F-2144

THE SEAL APPEARING ON THIS DOCUMENT WAS AUTHORIZED BY MATTHEW R. REED, P.E. 83143 ON DATE: 6/24/2020. RELEASED FOR REVIEW PURPOSES. IT IS NOT TO BE USED FOR BIDDING, PERMIT OR CONSTRUCTION PURPOSES. THE AUTHORIZATION OF THE RESPONSIBLE ENGINEER IS DEFINED UNDER THE TEXAS ENGINEERING PRACTICE ACT.

FREESE AND NICHOLS
4040 Broadway Street, Suite 600
San Antonio, Texas 78209-6350
Phone - (210) 298-8000
Fax - (210) 298-9801
Web - www.freese.com

CITY OF CASTROVILLE
WWTP CAPACITY EXPANSION PROJECT
STRUCTURAL
ADMINISTRATION BUILDING
CMU WALL LAYOUT & REINFORCING PLAN

NO.	ISSUE	BY	DATE
1	RECORD DRAWING	MRR	06/24/20
0	ISSUED FOR CONSTRUCTION	MRR	11/16/16

VERIFY SCALE Bar is one inch on original drawing. If not one inch on this sheet, adjust scale.
0 1"

F&N JOB NO. CVL14259
DATE 6/10/16
DESIGNED MRR
DRAWN JLM
REVISED -
CHECKED AD
FILE NAME ST-ADM-PL-CMU.dwg

SHEET AD-S2
SEQ.

ACAD Rel: 21.0s (LMS Tech)
Filename: N:\ST\ST-ADM-PL-CMU.dwg
Last Saved: 6/18/2020 11:02 AM Saved By: 02198

Plot Date: 6/18/2020 11:20 AM Plot By: 02198 Filename: N:\ST\ST-ADM-PL-CMU.dwg

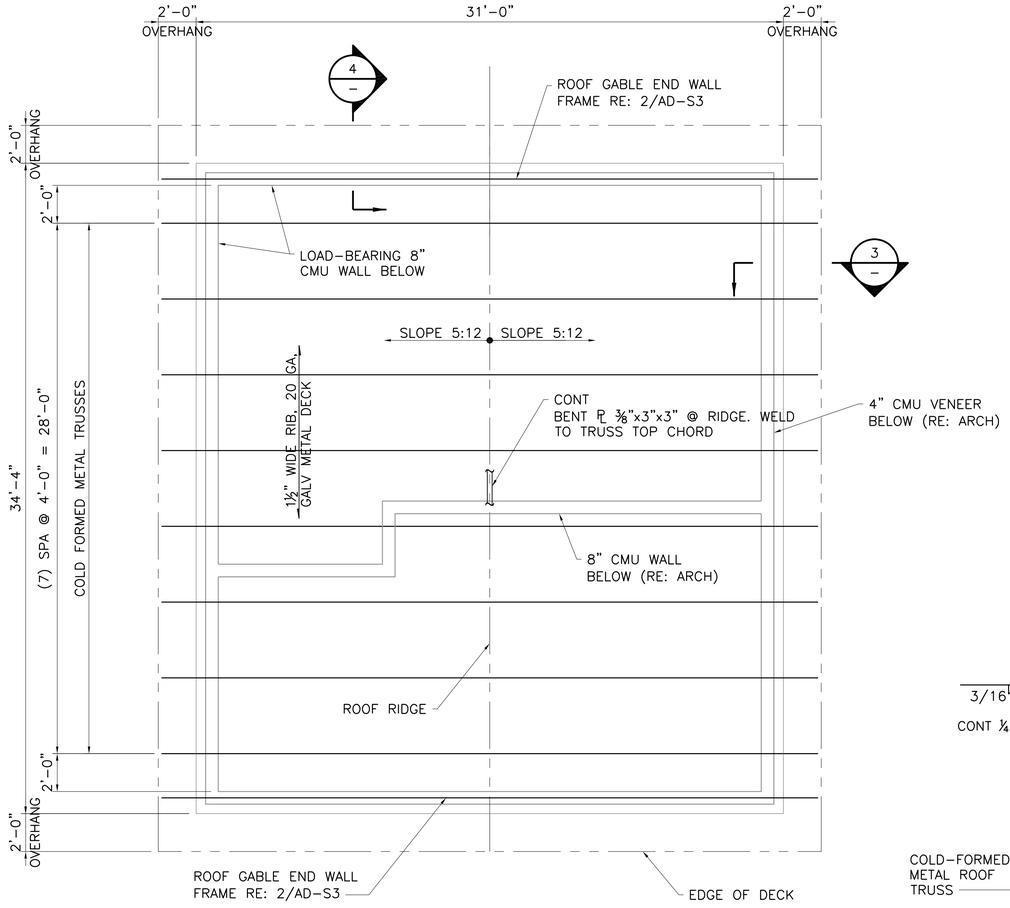

1 ROOF FRAMING PLAN
1/4"=1'-0"

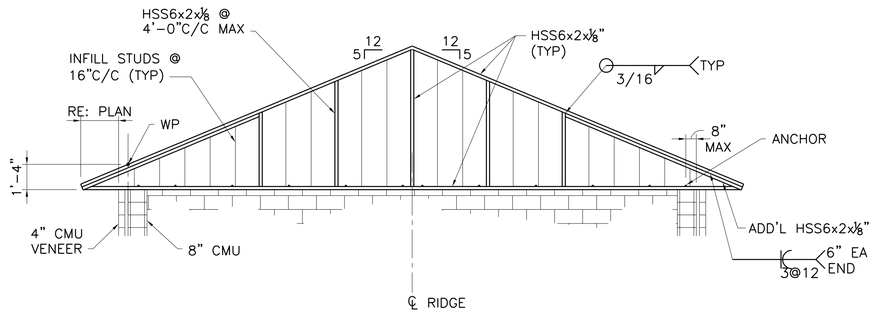

2 GABLE END WALL FRAMING
NOT TO SCALE

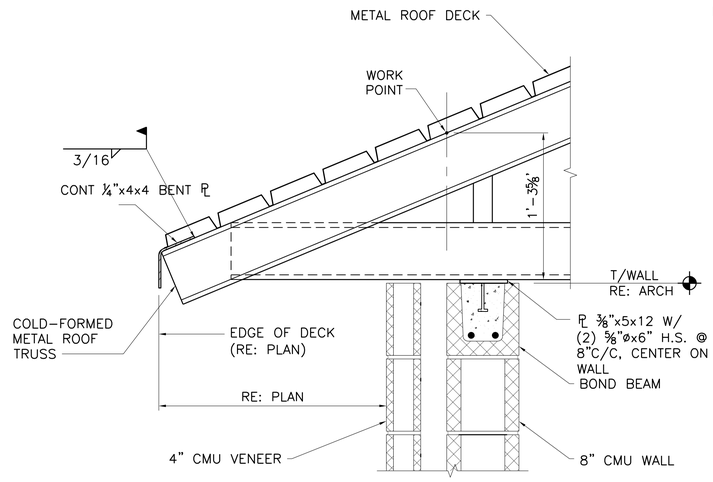

3 SECTION
1 1/2"=1'-0"

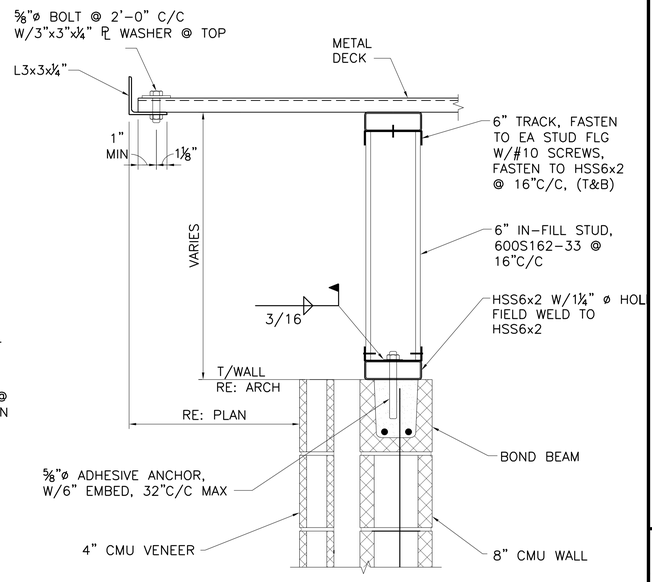

4 SECTION
1 1/2"=1'-0"

0 1' 2' 4' 8'
1/4"=1'-0"

This Record Drawing is a combination of the sealed engineering contract drawings for this project, modified by information furnished by the contractor reflecting changes in the Project made during construction. The original sealed drawings are on file at the offices of FREESE AND NICHOLS, INC. RECORD DRAWINGS PREPARED ON: 6/24/2020

Freese and Nichols, Inc.
Texas Registered Engineering Firm F-2144

THE SEAL APPEARING ON THIS DOCUMENT WAS AUTHORIZED BY MICHAEL RAY ROBERTSON, P.E. TEXAS NO. 50201 ON: 06/10/2016. ALTERATION OF A SEALED DOCUMENT WITHOUT PROPER NOTIFICATION OF THE RESPONSIBLE ENGINEER IS AN OFFENSE UNDER THE TEXAS ENGINEERING PRACTICE ACT.

FREESE AND NICHOLS
4040 Broadway Street, Suite 600
San Antonio, Texas 78209-6350
Phone - (210) 298-3800
Fax - (210) 298-3801
Web - www.freese.com

CITY OF CASTROVILLE
WWTP CAPACITY EXPANSION PROJECT
STRUCTURAL
ADMINISTRATION BUILDING
ROOF FRAMING PLAN AND SECTIONS

NO.	ISSUE	BY	DATE
2	RECORD DRAWING	MRR	06/24/20
1	ISSUED FOR CONSTRUCTION	MRR	11/16/16

F&N JOB NO. CVL14259
DATE 6/10/16
DESIGNED MRR
DRAWN JLM
REVISED
CHECKED AD
FILE NAME ST-ADM-PS-FRMG.dwg

VERIFY SCALE Bar is one inch on original drawing. If not one inch on this sheet, adjust scale.

SHEET AD-S3
SEQ.

ACAD Rel: 21.0s (LMS Tech)
Filename: N:\ST\ST-ADM-PS-FRMG.dwg
Last Saved: 6/18/2020 11:03 AM Saved By: 02198

Plot Date: 6/18/2020 11:20 AM Plot By: 02198 Filename: N:\ST\ST-ADM-PS-FRMG.dwg

PLUMBING LEGEND

SYMBOL	DESCRIPTION	ABBREVIATION
	SANITARY WASTE	SW
AW	ACID WASTE	AW
	VENT	V
	HOT WATER	HW
	COLD WATER	CW
NPW	NON-POTABLE WATER	NPW
	UNDERFLOOR PIPING	
	DIRECTION OF PITCH DOWN (SLOPE)	
	DIRECTION OF FLOW	
FCO	FLOOR CLEANOUT	FCO
WCO	WALL CLEANOUT	WCO
DGCO	DOUBLE GRADE CLEANOUT	DGCO
NFWH or HB	NON-FREEZE WALL HYDRANT or HOSE BIBB	NFWH or HB
	SHUT-OFF VALVE (SEE SPECIFICATIONS FOR TYPE)	
	VALVE IN RISER (TYPE AS SPECIFIED OR NOTED)	
	RELIEF VALVE	
	UNION	
	PIPE TURNING AND RISING UP	
	PIPE TURNING AND DROPPING DOWN	
	TEE OUT OF TOP OF PIPE	
	TEE OUT OF BOTTOM OF PIPE	
	CAP ON END OF PIPE	
	FLOOR DRAIN	FD
	FLOOR SINK	FS
1/4"/FT	1/4" PER FOOT SLOPE	
1/8"/FT	1/8" PER FOOT SLOPE	
	AMERICANS WITH DISABILITIES ACT	ADA
	ABOVE FINISHED GRADE	AFG
	ABOVE FINISHED FLOOR	AFF
	BELOW FINISHED FLOOR	BFF
	BELOW FINISHED GRADE	BFG
	ELEVATION	EL
	FEET PER SECOND	FPS
	FINISHED FLOOR	FF
	GALLONS PER HOUR	GPH
	GALLONS PER MINUTE	GPM
	HORSE POWER	HP
	HOT WATER TEMPERATURE MAINTENANCE	HWTM
	INTERNATIONAL PLUMBING CODE	IPC
	INVERT ELEVATION	I.E.
	PIPE FREEZE PROTECTION MAINTENANCE	PFPM
	RECOVERY	REC
	REDUCED PRESSURE BACKFLOW PREVENTER	RPBP
	REFER TO:	RE:
	TEXAS ACCESSIBILITIES STANDARD	TAS
	TEMPERATURE	TEMP
	TEXAS COMMISSION ON ENVIRONMENTAL QUALITY	TCEQ
	THERMOSTATIC MIXING VALVE STATION	TMVS
	TYPICAL	TYP
	VENT THROUGH ROOF	VTR
	WITH	W/
X / XX-XXX (RISER NUMBER / SHEET RISER IS TAKEN FROM)	PLUMBING RISER LOCATOR	
X / XX-XXX (DRAWING/DETAIL NUMBER / SHEET NUMBER ON WHICH DRAWING/DETAIL IS DRAWN)	DRAWING/DETAIL REFERENCE	

NOTE: ALL SYMBOLS AND ABBREVIATIONS SHOWN ARE NOT NECESSARILY USED ON THE DRAWINGS.

PLUMBING FIXTURE ROUGH-IN SCHEDULE

MARK	DESCRIPTION	ROUGH-IN (INCHES) W	V	HW	CW	REMARKS
WC1	WATER CLOSET	4"	2"	–	1"	FLOOR MOUNTED WITH FLUSH VALVE, TAS ACCESSIBLE
L1	LAVATORY	2"	2"	1/2"	1/2"	WALL MOUNTED, TAS ACCESSIBLE
S1	SINK	2"	2"	1/2"	1/2"	SINGLE COMPARTMENT, COUNTERTOP MOUNTED, TAS ACCESSIBLE
EWC1	ELECTRIC WATER COOLER	2"	2"	–	1/2"	WALL MOUNTED, HI-LO TYPE W/APRON ON HIGH UNIT, ADA/TAS ACCESSIBLE
ESE1	EMERGENCY SHOWER/EYEWASH	–	–	–	1 1/4"	FREEZE PROTECTED
SSK1	SERVICE SINK	2"	2"	1/2"	1/2"	WALL MOUNTED

NOTE:
REFER TO SPECIFICATIONS FOR ADDITIONAL INFORMATION, ACCEPTABLE MANUFACTURER AND MODEL NUMBER ON PLUMBING FIXTURES.

WATER HEATER SCHEDULE

MARK	LOCATION	RECOVERY GPH	TEMPERATURE RISE	TEMPERATURE LEAVING	STOR. CAP. GALLONS	KW	V./PH.	COMMENTS
WH1	MECH. ROOM, #A03	27	60°F	120°F	40	4	240/3	A.O. SMITH #DEN-40

NOTES: SPILL T&P INTO NEAREST FLOOR SINK.

INSTANTANEOUS WATER HEATER SCHEDULE

MARK	LOCATION	SERVES	TEMP RISE °F	KW	V./PH.	MANUFACTURER AND MODEL NO.	COMMENTS
WH2	CHLORINE FEED, #C102	EMERGENCY SHOWER/EYEWASH	32	7.5	240/1	EEMAX #SP 75 DL	CHLORINE BUIDLING

TYPICAL PLUMBING GENERAL NOTES

1. REFER TO SPECIFICATIONS FOR MATERIALS AND METHODS FOR CONSTRUCTION.
2. REFER TO ARCHITECTURAL REFLECTED CEILING PLANS FOR THE EXACT LOCATION OF ALL CEILING MOUNTED DEVICES.
3. REFER TO ARCHITECTURAL INTERIOR ELEVATION DRAWINGS, WHERE THE ARCHITECT HAS DRAWN SUCH ELEVATIONS, FOR THE LOCATIONS OF ALL WALL MOUNTED DEVICES. OTHERWISE INSTALL PER INDUSTRY STANDARDS, CODES AND/OR ORDINANCES OF THE AUTHORITY HAVING JURISDICTION.
4. COORDINATE ALL SLAB PENETRATIONS AND SLEEVES PRIOR TO EACH CONCRETE POUR.
5. PROVIDE ACCESS DOORS FOR INSTALLATION IN WALLS AND CEILINGS WHERE ACCESS IS REQUIRED TO CONCEALED PLUMBING EQUIPMENT, VALVES, CONTROLS AND OTHER DEVICES.
6. INSTALL PIPING TO PROVIDE THE MAXIMUM POSSIBLE CLEAR HEIGHT UNDERNEATH. MAINTAIN A MINIMUM OF 10 INCHES ABOVE FINISHED CEILING TO PROVIDE CLEARANCE FOR LIGHTING FIXTURES.
7. COORDINATE THE EXACT LOCATION OF FLOOR DRAINS WITH THE ARCHITECTURAL DRAWINGS AND MECHANICAL EQUIPMENT LOCATIONS PRIOR TO INSTALLATION OF DRAINS.
8. COORDINATE WORK WITH ARCHITECTURAL FEATURES, PIPING, EQUIPMENT, MECHANICAL WORK, ELECTRICAL WORK, AND BUILDING STRUCTURE TO AVOID INTERFERENCES.
9. PROVIDE RATED INTUMESCENT CAULK OR PUTTY AT ALL RATED PENETRATION LOCATIONS. ESCUTCHEONS ARE NOT REQUIRED, HOWEVER THE CAULK OR PUTTY SHALL BE INSTALLED SMOOTH AND FLUSH TO THE SURROUNDING SURFACE.
10. MINIMUM SLOPE FOR DRAINAGE PIPE WITHIN 5'-0" OF BUILDING IS ¼" PER FOOT FOR 2½" DIAMETER AND LESS AND ⅛" PER FOOT FOR 3" DIAMETER AND GREATER. MINIMUM SLOPE FOR DRAINAGE PIPE BEYOND 5'-0" OF BUILDING IS 1%.
11. ALL FLOOR DRAINS AND FLOOR SINKS SHALL BE PROVIDED WITH A TRAP GUARD.
12. ALL HORIZONTAL DOMESTIC HOT WATER PIPING ABOVE THE CEILING SHALL BE PROVIDED WITH HOT WATER TEMPERATURE MAINTENANCE TAPE, 110°F.

This Record Drawing is a combination of the sealed engineering contract drawings for this project, modified by information furnished by the contractor reflecting changes in the Project made during construction. The original sealed drawings are on file at the offices of
FREESE AND NICHOLS, INC.
RECORD DRAWINGS PREPARED ON:
6/24/2020

Freese and Nichols, Inc.
Texas Registered Engineering Firm F-2144

ISSUED FOR CONSTRUCTION
ON 11/18/2016

THE SEAL THAT ORIGINALLY APPEARED ON THIS DOCUMENT WAS AUTHORIZED BY ROBERT C. H. SPROGGINS, P.E.
ALTERATION OF A SEALED DOCUMENT WITHOUT PROPER AUTHORIZATION AND SUBSEQUENT DISTRIBUTION IS A VIOLATION OF THE TEXAS ENGINEERING PRACTICE ACT

FREESE AND NICHOLS
4040 Broadway Street, Suite 600
San Antonio, Texas 78209-6350
Phone - (210) 824-3600
Fax - (210) 284-9401
Web - www.freese.com

CITY OF CASTROVILLE

WWTP CAPACITY EXPANSION PROJECT

PLUMBING

LEGEND, SCHEDULES AND GENERAL NOTES

F&N JOB NO. CVL14259
DATE 6/10/16
DESIGNED GMM
DRAWN GMM
CHECKED RJK
FILE NAME PL-CHL-GN-LGND.dwg

NO.	ISSUE	BY	DATE
1	RECORD DRAWINGS	EMH	06/24/20
0	ISSUED FOR CONSTRUCTION	CCS	11/18/16

VERIFY SCALE Bar is one inch on original drawing. If not one inch on this sheet, adjust scale.
0 1"

SHEET P-1
SEQ. 84

ACAD Rel: 21.0s (LMS Tech)
Filename: N:\PLBG\PL-CHL-GN-LGND.dwg
Last Saved: 6/24/2020 1:57 PM Saved By: 02864

Plot Date: 6/24/2020 2:06 PM Plot By: 02864 Filename: N:\PLBG\PL-CHL-GN-LGND.dwg

GENERAL NOTES:

1. REFER TO SHEET P-1 FOR LEGEND SCHEDULES AND GENERAL NOTES.

NOTES BY SYMBOL "⬡"

1. 1/2" CW TO NEW REFRIGERATOR WITH ICEMAKER MAKER. PROVIDE NEEDLE VALVE, FILTER AND PRESSURE VACUUM BREAKER.

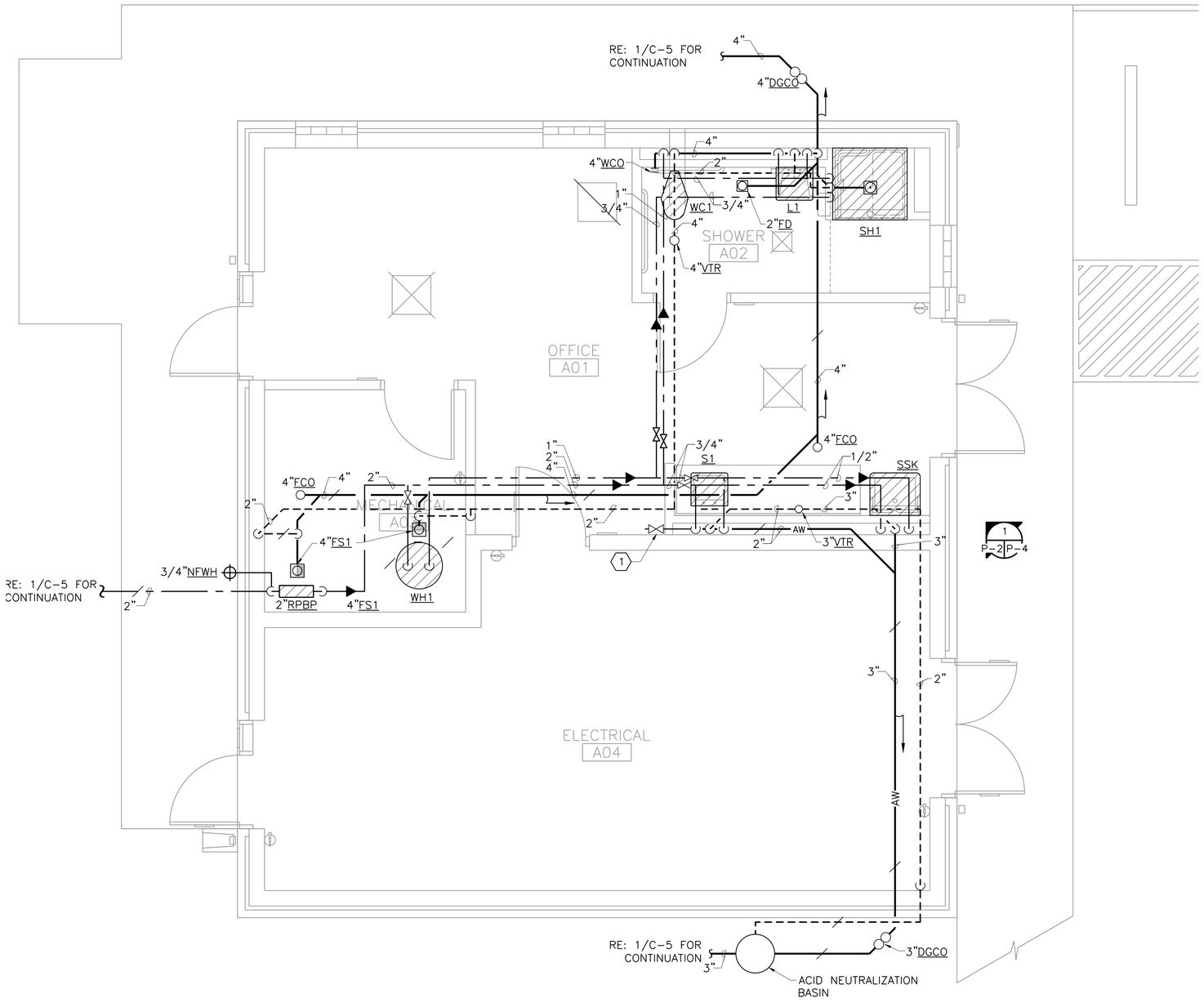

NORTH

1 ADMIN-ELEC BUILDING FLOOR PLAN
3/8"=1'-0"

This Record Drawing is a combination of the sealed engineering contract drawings for this project, modified by information furnished by the contractor reflecting changes in the Project made during construction. The original sealed drawings are on file at the offices of FREESE AND NICHOLS, INC.
RECORD DRAWINGS PREPARED ON: 6/24/2020

0 1' 2' 4'
3/8"=1'-0

Freese and Nichols, Inc.
Texas Registered Engineering Firm F-2144

ISSUED FOR CONSTRUCTION ON 11/18/2016

THE SEAL THAT ORIGINALLY APPEARED ON THIS DOCUMENT WAS AUTHORIZED BY CURTIS C. SPRAGGINS, P.E. TEXAS NO. 117069 ON 04/26/2016. ALTERATION OF A SEALED DOCUMENT WITHOUT PROPER NOTIFICATION OF THE RESPONSIBLE ENGINEER IS AN OFFENSE UNDER THE TEXAS ENGINEERING PRACTICE ACT.

FREESE AND NICHOLS
4040 Broadway Street, Suite 600
San Antonio, Texas 78209-6350
Phone - (210) 298-3800
Fax - (210) 298-3801
Web - www.freese.com

CITY OF CASTROVILLE
WWTP CAPACITY EXPANSION PROJECT
PLUMBING
ADMIN-ELEC BUILDING FLOOR PLAN

NO.	ISSUE	BY	DATE
2	RECORD DRAWINGS	EMH	06/24/20
1	ISSUED FOR CONSTRUCTION	CCS	11/18/16

F&N JOB NO. CVL14259
DATE 6/10/16
DESIGNED GMM
DRAWN GMM
REVISED
CHECKED RJK
FILE NAME PL-ADM-PL-FLOR.dwg

VERIFY SCALE 0 1 Bar is one inch on original drawing. If not one inch on this sheet, adjust scale.

SHEET P-2
SEQ. 85

ACAD Rel: 21.0s (LMS Tech)
Filename: N:\PLBG\PL-ADM-PL-FLOR.dwg
Last Saved: 6/24/2020 1:54 PM Saved By: 02864

Plot Date: 6/24/2020 2:07 PM Plot By: 02864 Filename: N:\PLBG\PL-ADM-PL-FLOR.dwg

GENERAL NOTES:

1. REFER TO SHEET P-1 FOR LEGEND, SCHEDULES AND GENERAL NOTES.

NOTES BY SYMBOL "⬡"

1. J-BOX FOR EMERGENCY SHOWER/EYEWASH HEAT TRACE CABLE.

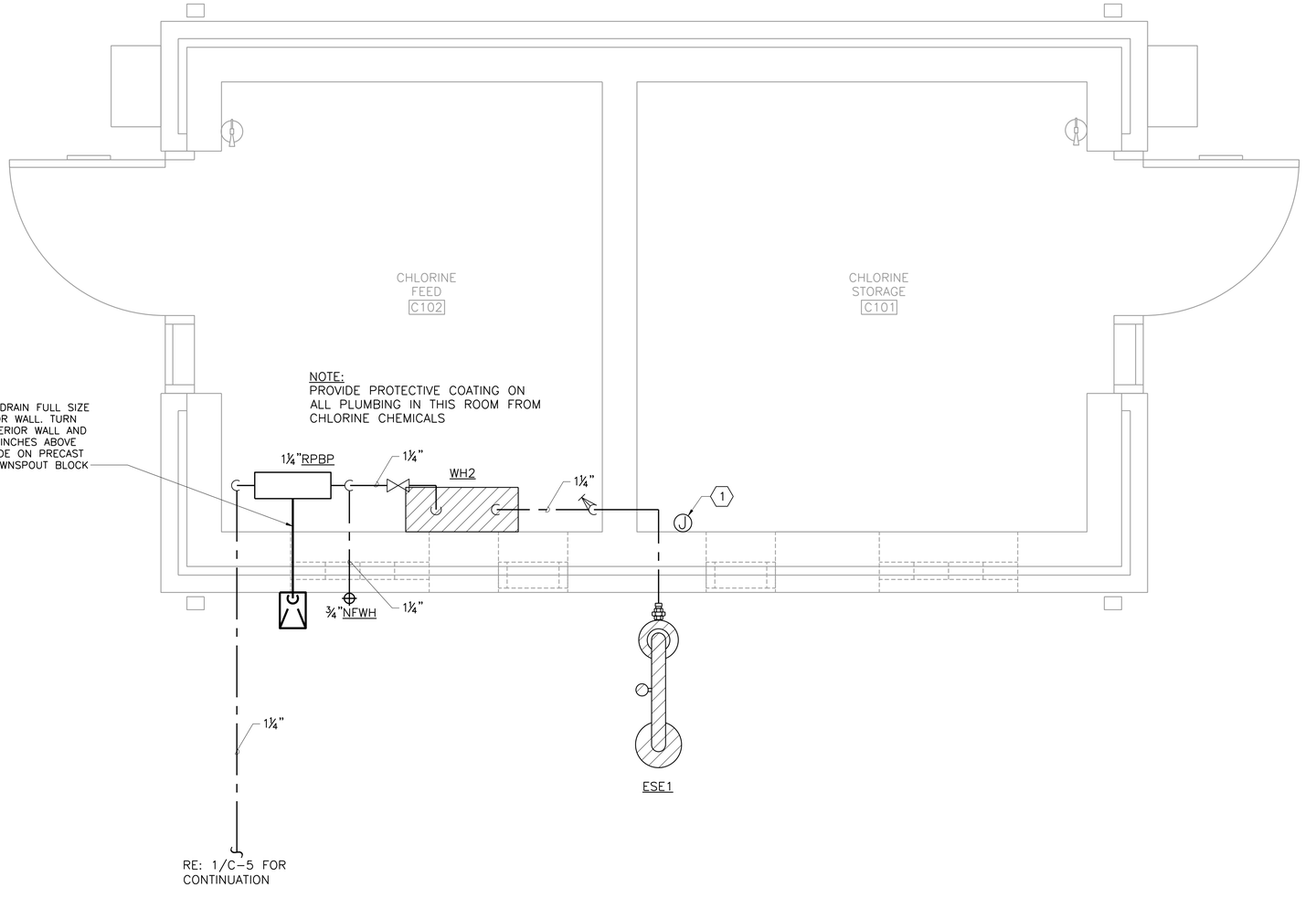

NORTH

1 CHLORINE BUILDING FLOOR PLAN
3/4"=1'-0"

This Record Drawing is a combination of the sealed engineering contract drawings for this project, modified by information furnished by the contractor reflecting changes in the Project made during construction. The original sealed drawings are on file at the offices of
FREESE AND NICHOLS, INC.
RECORD DRAWINGS PREPARED ON: 6/24/2020

0 6" 1' 2'
3/4"=1'-0

Freese and Nichols, Inc.
Texas Registered Engineering Firm F-2144

ISSUED FOR CONSTRUCTION
ON 11/18/2016

THE SEAL THAT APPEARED ON THIS DOCUMENT WAS AUTHORIZED BY REGINALD J. SIMMONS, P.E.
ALTERATION OF A SEALED DOCUMENT WITHOUT PROPER AUTHORITY FOR REVIEW PURPOSES IS AN OFFENSE UNDER THE TEXAS ENGINEERING PRACTICE ACT

FREESE NICHOLS
4040 Broadway Street, Suite 600
San Antonio, Texas 78209-6350
Phone: (210) 826-3500
Fax: (210) 826-8901
Web - www.freese.com

CITY OF CASTROVILLE

WWTP CAPACITY EXPANSION PROJECT

PLUMBING

CHLORINE BUILDING FLOOR PLAN

F&N JOB NO. CVL14259
DATE 6/10/16
DESIGNED GMM
DRAWN GMM
CHECKED RJK
FILE NAME PL-CHL-PL-FLOR.dwg

NO.	ISSUE	BY	DATE
2	RECORD DRAWINGS	EMH	06/24/20
1	ISSSUED FOR CONSTRUCTION	CCS	11/18/16

VERIFY SCALE Bar is one inch on original drawing. If not one inch on this sheet, adjust scale.
0 1"

SHEET P-3
SEQ. 86

ACAD Rel: 21.0s (LMS Tech)
Filename: N:\PLBG\PL-CHL-PL-FLOR.dwg
Last Saved: 6/24/2020 1:54 PM Saved By: 02864

Plot Date: 6/24/2020 2:07 PM Plot By: 02864 Filename: N:\PLBG\PL-CHL-PL-FLOR.dwg

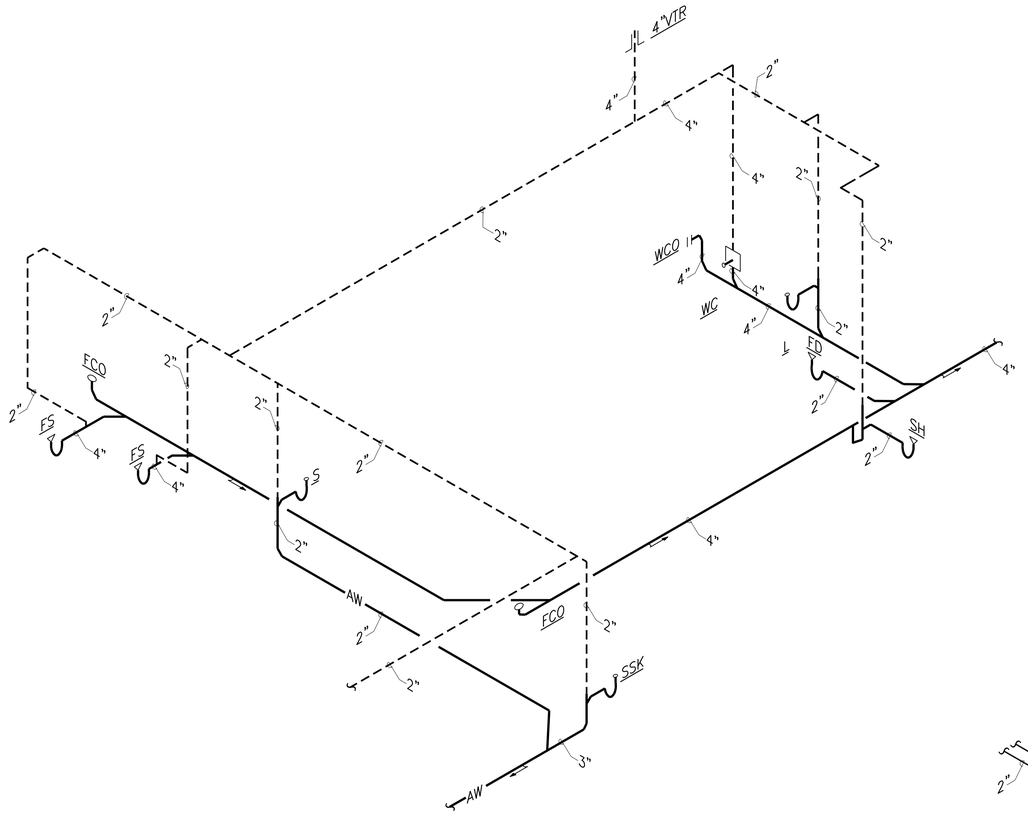

1 P-2 P-4 WASTE AND VENT RISER DIAGRAM

SCALE: NOT TO SCALE

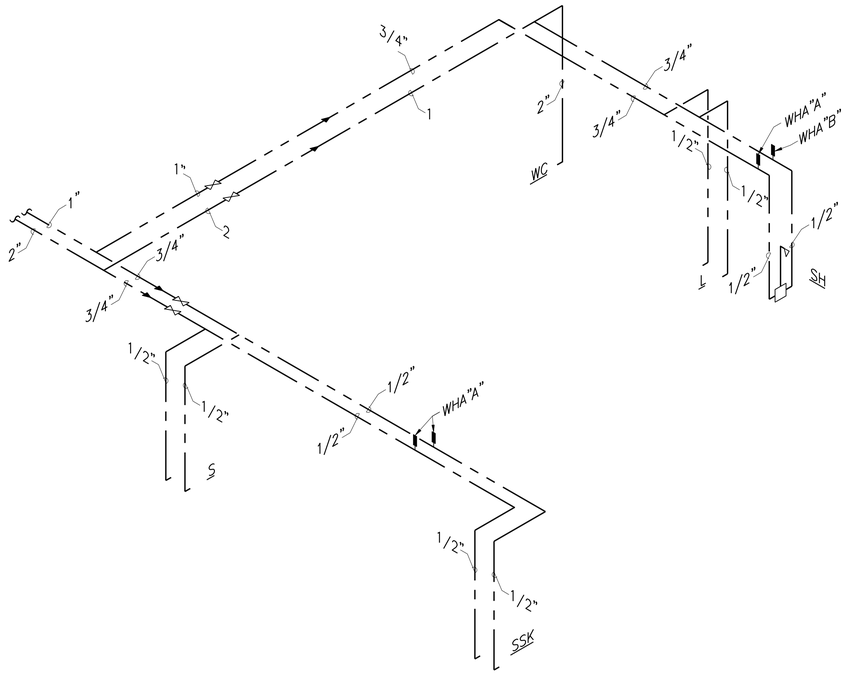

2 P-2 P-4 WATER RISER DIAGRAM

SCALE: NOT TO SCALE

GENERAL NOTES:

1. REFER TO SHEET P-1 FOR LEGEND, SCHEDULES AND GENERAL NOTES.

This Record Drawing is a combination of the sealed engineering contract drawings for this project, modified by information furnished by the contractor reflecting changes in the Project made during construction. The original sealed drawings are on file at the offices of FREESE AND NICHOLS, INC.
RECORD DRAWINGS PREPARED ON: 6/24/2020

Freese and Nichols, Inc.
Texas Registered Engineering Firm F-2144

ISSUED FOR CONSTRUCTION
ON 11/18/2016

THE SEAL THAT ORIGINALLY APPEARED ON THIS DOCUMENT WAS AUTHORIZED BY JAMES C. SIMPSONS, P.E.
ALTERATION OF A SEALED DOCUMENT WITHOUT PROPER AUTHORIZATION AND SPECIFIC DESCRIPTION OF ALTERATION IS AN OFFENSE UNDER THE TEXAS ENGINEERING PRACTICE ACT

FREESE NICHOLS

4040 Broadway Street, Suite 600
San Antonio, Texas 78209-6350
Phone - (210) 826-3500
Fax - (210) 826-8901
Web - www.freese.com

CITY OF CASTROVILLE

WWTP CAPACITY EXPANSION PROJECT

PLUMBING

RISER DIAGRAMS

NO.	ISSUE	BY	DATE
2	RECORD DRAWINGS	EMH	06/24/20
1	ISSSUED FOR CONSTRUCTION	CCS	11/18/16

VERIFY SCALE Bar is one inch on original drawing. If not one inch on this sheet, adjust scale.
0 1"

F&N JOB NO. CVL14259
DATE 6/10/16
DESIGNED GMM
DRAWN GMM
REVISED -
CHECKED RJK
FILE NAME PL-ADM-PL-RISE.dwg

SHEET P-4
SEQ. 87

ACAD Rel: 21.0s (LMS Tech)
Filename: N:\PLBG\PL-ADM-PL-RISE.dwg
Last Saved: 6/24/2020 1:52 PM Saved By: 02864

Plot Date: 6/24/2020 2:07 PM Plot By: 02864 Filename: N:\PLBG\PL-ADM-PL-RISE.dwg

HVAC SYMBOLS (ALL SYMBOLS SHOWN ARE NOT NECESSARILY USED ON THE DRAWINGS)

ABBREVIATIONS

A/C	AIR CONDITIONING
AFF	ABOVE FINISHED FLOOR
APPROX	APPROXIMATELY
ARCH	ARCHITECTURE/ARCHITECTURAL
ASHRAE	AMERICAN SOCIETY OF HEATING, REFRIGERATION, AND AIR CONDITIONING ENGINEERS
BAS	BUILDING AUTOMATION SYSTEM
BHP	BRAKE HORSEPOWER
BTUH	BRITISH THERMAL UNIT PER HOUR
C	CENTIGRADE
CC	COOLING COIL
CFM	CUBIC FEET PER MINUTE
CD	CONDENSATE DRAIN
CONN	CONNECTION
dB	DECIBELS
DIA	DIAMETER
DB	DRY BULB
DDC	DIRECT DIGITAL CONTROL
DEG	DEGREE
DX	DIRECT EXPANSION
DWGS	DRAWINGS
ELEC	ELECTRIC/ELECTRICAL
EAT	ENTERING AIR TEMPERATURE
EWT	ENTERING WATER TEMPERATURE
EFF	EFFICIENCY
EL	ELEVATION
EMCS	ENERGY MONITORING AND CONTROL SYSTEM
EXH	EXHAUST
F	FAHRENHEIT
FLEX	FLEXIBLE
FPM	FEET PER MINUTE
FT	FEET, FOOT
GPM	GALLONS PER MINUTE
HC	HEATING COIL
HVAC	HEATING, VENTILATION AND AIR CONDITIONING
HZ	HERTZ
HP	HORSEPOWER
HTG	HEATING
IN	INCHES
KW	KILOWATT
LAT	LEAVING AIR TEMPERATURE
LWT	LEAVING WATER TEMPERATURE
MAX	MAXIMUM
MECH	MECHANICAL
MCA	MINIMUM CIRCUIT AMPACITY
MBH	THOUSANDS BTU's PER HOUR
MIN	MINIMUM
NFPA	NATIONAL FIRE PROTECTION ASSOC.
NC	NOISE CRITERIA
NOM	NOMINAL
NTS	NOT TO SCALE
NO	NUMBER
N.C.	NORMALLY CLOSED
N.O.	NORMALLY OPEN
OA	OUTSIDE AIR
P/PH	PHASE
PLBG	PLUMBING
PSI	POUNDS PER SQUARE INCH
RE	REFER/REFERENCE
RA	RETURN AIR
RPM	REVOLUTIONS PER MINUTE
SMACNA	SHEET METAL AND AIR CONDITIONING CONTRACTORS NATIONAL ASSOC.
SQ FT	SQUARE FEET
SP	STATIC PRESSURE
SA	SUPPLY AIR
TEMP	TEMPERATURE
T-STAT	THERMOSTAT
TYP	TYPICAL
UNO	UNLESS NOTED OTHERWISE
VAV	VARIABLE AIR VOLUME
VFD	VARIABLE FREQUENCY DRIVE
VD	VOLUME DAMPER
WT	WATTS
WTR	WATER
WC	WATER COLUMN
WG	WATER GAUGE
WB	WET BULB

PIPING SYMBOLS

- ELBOW UP
- ELBOW DOWN
- VALVE IN DROP
- VALVE IN CENTER DROP
- VALVE IN RISE
- TEE OUTLET UP
- TEE OUTLET DOWN
- DIRECTION OF FLOW
- DIRECTION OF SLOPE
- PIPE FLANGE
- UNION
- STRAINER W/ BLOWDOWN VALVE
- GATE VALVE
- GLOBE VALVE
- BALL VALVE
- BALANCING VALVE WITH DIFFERENTIAL PRESSURE TAPS
- OS&Y VALVE
- CHECK VALVE
- PRESSURE REDUCING VALVE
- BUTTERFLY VALVE
- 3-WAY CONTROL VALVE
- 2-WAY CONTROL VALVE
- TRIPLE DUTY VALVE
- PIPE ANCHOR
- EXPANSION JOINT
- PIPE GUIDE
- CAP ON END LINE
- FS — FLOW SWITCH
- PS — PRESSURE SWITCH
- MANUAL AIR VENT
- AUTOMATIC AIR VENT
- T&P RELIEF VALVE
- PRESSURE GAUGE WITH GAUGE COCK
- THERMOMETER
- FLEXIBLE CONNECTION
- PRESSURE GAUGE
- PUMP

DUCTWORK SYMBOLS

- SUPPLY AIR DIFFUSER – ARROWS INDICATE PATTERN. NO ARROWS SHOWN EQUALS 4-WAY.
- RETURN/TRANSFER AIR GRILLE
- EXHAUST GRILLE
- SUPPLY AIR PLENUM SLOT DIFFUSER
- 12" — ROUND DUCTWORK
- 12/12 — RECTANGULAR DUCTWORK. SIZE INDICATED IN INCHES, FIRST NUMBER IS SIDE SHOWN
- FLEXIBLE DUCT
- SUPPLY OR OUTSIDE AIR DUCT
- RETURN/TRANSFER AIR DUCT
- RELIEF OR EXHAUST AIR DUCT
- RADIUS DUCTWORK ELBOW ROUND OR RECTANGULAR
- RECTANGULAR DUCTWORK BRANCH TAKE-OFF W/DAMPER AND 45 DEGREE BRANCH INLET
- FLARED SPIN-IN TAP WITH DAMPER
- SPIN-IN TAP WITH DAMPER
- ROUND DUCT BRANCH TAKE-OFF FROM RECTANGULAR OR FLAT OVAL MAIN WITH CONICAL TAP. PROVIDE BALANCE DAMPER FOR LOW PRESSURE DUCTWORK ONLY
- DUCTWORK SIZE TRANSITION.
- FLEXIBLE DUCT CONNECTION TO EQUIPMENT
- SUPPLY OR OUTSIDE AIR DUCT UP
- SUPPLY OR OUTSIDE AIR DUCT DOWN
- RETURN AIR DUCT UP
- RETURN AIR DUCT DOWN
- RELIEF OR EXHAUST AIR DUCT UP
- RELIEF OR EXHAUST AIR DUCT DOWN
- IN-LINE 90 DEGREE RISE OR DROP IN DUCT
- UP — INCLINED RISE IN DUCT
- DN — INCLINED DROP IN DUCT
- 90° ELBOW WITH TURNING VANES
- M — MOTORIZED DAMPER
- MANUAL VOLUME (BALANCE) DAMPER
- FD — FD – FIRE DAMPER; SD – SMOKE DAMPER; CD – COMBINATION FIRE/SMOKE DAMPER

PLAN SYMBOLOGY

		SINGLE LINE	DOUBLE LINE
DEMOLITION PLANS			
DUCTWORK	EXISTING TO REMAIN		
	EXISTING TO BE REMOVED		
PIPING	EXISTING TO REMAIN		
	EXISTING TO BE REMOVED		
EXISTING EQUIPMENT (FANS, AIR DEVICES, PUMPS, ETC.) TO BE RELOCATED.		R	
NEW PLANS		SINGLE LINE	DOUBLE LINE
DUCTWORK	EXISTING TO REMAIN		
	NEW		
PIPING	EXISTING TO REMAIN		
	NEW		
EXISTING EQUIPMENT (FANS, AIR DEVICES, PUMPS, ETC.) TO BE RELOCATED.		R	

EQUIPMENT DESIGNATIONS

AHU	AIR HANDLING UNIT
ACC	AIR COOLED CHILLER
EUH	ELECTRIC UNIT HEATER
EF	EXHAUST FAN
ACCU	AIR COOLED CONDENSING UNIT

MISCELLANEOUS

- A200 — DIFFUSER/GRILLE/REGISTER LABEL: "A" – TYPE/DESIGNATION; "200" – AIRFLOW (CFM)
- (T) THERMOSTAT
- (S) DUCT SMOKE DETECTOR
- DRAWING NOTE REFERENCE
- ∅ DIAMETER/PHASE
- POINT OF NEW CONNECTION BETWEEN NEW AND EXISTING WORK

GENERAL NOTES

1. THIS PROJECT IS DESIGNED BASED ON THE FOLLOWING CODES: UNIFORM MECHANICAL CODE 2012, INTERNATIONAL MECHANICAL CODE 2012, INTERNATIONAL ENERGY CONSERVATION CODE 2012, AND LOCAL AMENDMENTS.
2. ALL DUCT SIZES SHOWN ON THE DRAWINGS ARE NET INSIDE CLEAR DIMENSIONS.
3. UTILIZE LONG RADIUS ELBOWS WHERE SPACE PERMITS UNLESS OTHERWISE NOTED. ALL RECTANGULAR ELBOWS SHALL CONTAIN TURNING VANES.
4. COORDINATE WITH OTHER UTILITIES TO AVOID INTERFERENCES WHEN INSTALLING DUCTWORK, PIPING AND EQUIPMENT.
5. FURNISH AND INSTALL ALL EQUIPMENT AS PER MANUFACTURER'S RECOMMENDATIONS AND INSTRUCTIONS.
6. VERIFY DIMENSIONS, LOCATIONS, ELEVATIONS AND CONFIGURATION OF ALL ITEMS ASSOCIATED WITH THE INSTALLATION OF THE DUCTWORK AND EQUIPMENT.
7. PROVIDE MODIFICATIONS AND ACCESSORIES AS REQUIRED AND RECOMMENDED BY THE MANUFACTURER TO ASSURE PROPER OPERATION OF EQUIPMENT.
8. PAINT ALL EQUIPMENT VISIBLE THRU AIR DEVICES MATTE BLACK.
9. PROVIDE MANUAL VOLUME DAMPERS IN DUCTWORK AT ALL DUCT SPLITS, BRANCH RUNOUTS AND DUCT COLLARS FOR REGISTERS.
10. ALL DUCTWORK SHALL BE CONSTRUCTED, SEALED AND INSTALLED IN CONFORMANCE TO SMACNA DUCT CONSTRUCTION STANDARDS.
11. TO RESOLVE FIELD PROBLEMS IN ROUTING DUCTWORK THE CONTRACTOR SHALL USE THE SAME CIRCULAR EQUIVALENT DIAMETER TO TRANSFORM DUCT SIZE FROM THAT SPECIFIED ON THE DRAWINGS.

$$DE = \frac{1.30\ (AB)^{0.625}}{(A + B)^{0.250}}$$

DE = CIRCULAR EQUIVALENT OF RECTANGULAR DUCT IN INCHES
A = LENGTH OF ONE SIDE OF DUCT IN INCHES
B = LENGTH OF OTHER SIDE OF DUCT IN INCHES

12. DUCT RUNOUTS TO LINEAR/RECTANGULAR SUPPLY DIFFUSERS SHALL BE THE SAME SIZE AS THE INLET DIAMETER OF THE DIFFUSER. THE LENGTH OF FLEXIBLE DUCTS TO THE DIFFUSERS SHALL NOT EXCEED 5'-0".
13. PROVIDE FIRE DAMPERS IN DUCTWORK AT ALL FIRE BARRIER PENETRATIONS.
14. PROVIDE FIRE RESISTANT FLEXIBLE CONNECTION WHENEVER DUCTWORK IS CONNECTED TO MOTORIZED EQUIPMENT.
15. DUCT MATERIAL SHALL BE ZINC-COATED STEEL WITH METAL AND GALVANIZING THICKNESS AS PER SMACNA CONSTRUCTION STANDARDS.
16. PROVIDE OSHA-REQUIRED CLEARANCES AROUND ALL HVAC EQUIPMENT AND COMPONENTS FOR PERSONNEL ACCESS AND MAINTENANCE.
17. PIPING HANGERS AND SUPPORTS – ALL HANGERS AND SUPPORTS SHALL COMPLY WITH MANUFACTURER'S STANDARDIZATION SOCIETY (MSS) STANDARDS. VERTICAL PIPES MUST BE SUPPORTED AT EACH FLOOR WITH PIPE CLAMPS.
18. INSULATE BACKS AND PLENUMS OF SUPPLY AIR DEVICES WITH MINIMUM 1" MINERAL FIBER.
19. FOR ALL MECHANICAL EQUIPMENT PROVIDE LOCAL DISCONNECT MOUNTED ON UNIT OR INTEGRAL TO UNIT CONTROL PANEL.
20. ALL AIR MOVING EQUIPMENT CONTAINING PARTICULATE FILTERS SHALL NOT BE OPERATED WITHOUT PARTICULATE FILTERS IN PLACE.
21. INSTALL DIELECTRIC COUPLINGS BETWEEN DISSIMILAR METALS.

This Record Drawing is a combination of the sealed engineering contract drawings for this project, modified by information furnished by the contractor reflecting changes in the Project made during construction. The original sealed drawings are on file at the offices of
FREESE AND NICHOLS, INC.
RECORD DRAWINGS PREPARED ON: 6/24/2020

Freese and Nichols, Inc.
Texas Registered Engineering Firm F-2144

ISSUED FOR CONSTRUCTION ON 11/18/2016

THE SEAL THAT ORIGINALLY APPEARED ON THIS DOCUMENT WAS AUTHORIZED BY CHARLES C. SPRIGGINS, P.E.
ALTERATION OF A SEALED DOCUMENT WITHOUT PROPER AUTHORIZATION AND ADDITIONAL ENGINEER'S SEAL IS AN OFFENSE UNDER THE TEXAS ENGINEERING PRACTICE ACT

FREESE NICHOLS
4040 Broadway Street, Suite 600
San Antonio, Texas 78209-6350
Phone - (210) 824-3000
Fax - (210) 826-2901
Web - www.freese.com

CITY OF CASTROVILLE
WWTP CAPACITY EXPANSION PROJECT
MECHANICAL
LEGEND

NO.	ISSUE	BY	DATE
1	RECORD DRAWINGS	EMH	06/24/20
0	ISSSUED FOR CONSTRUCTION	CCS	11/18/16

VERIFY SCALE Bar is one inch on original drawing. If not one inch on this sheet, adjust scale.
0" 1"

FAN JOB NO.	CVL14259
DATE	6/10/16
DESIGNED	TMG
DRAWN	TMG
REVISED	
CHECKED	CCS
FILE NAME	HV-ADM-GN-LGND.dwg

SHEET M-1
SEQ. 88

ACAD Rel: 21.0s (LMS Tech)
Filename: N:\HVAC\HV-ADM-GN-LGND.dwg
Last Saved: 6/24/2020 1:31 PM Saved By: 02864

Plot Date: 6/24/2020 1:34 PM Plot By: 02864 Filename: N:\HVAC\HV-ADM-GN-LGND.dwg

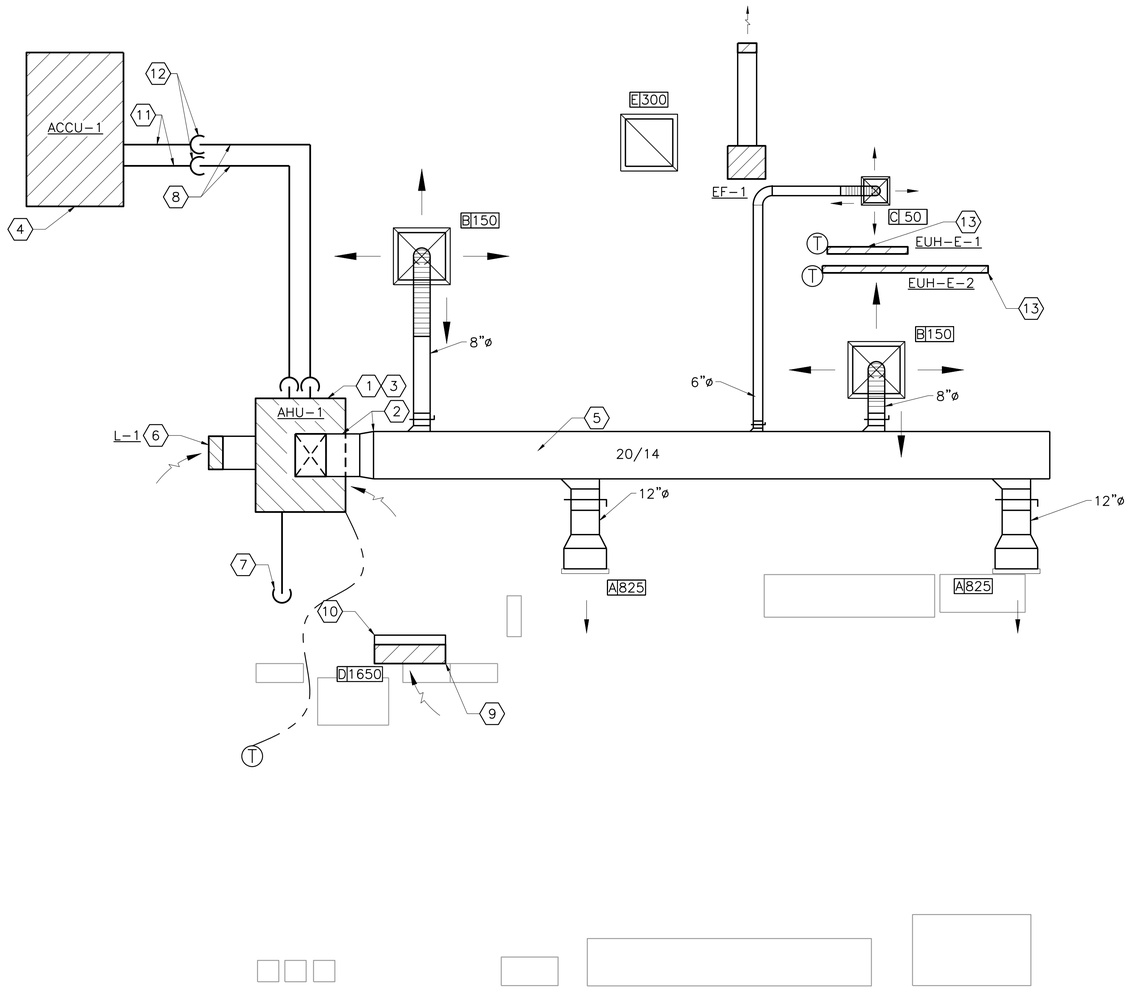

NORTH

1 – ADMINISTRATION–ELECTRICAL BUILDING FLOOR PLAN

3/8"=1'-0"

GENERAL NOTES:

1. REFER TO SHEET M-1 FOR GENERAL NOTES, SYMBOLS, ABBREVIATIONS AND DETAILS.
2. SUPPORT DUCTWORK PER THE TECHNICAL SPECIFICATIONS.
3. ALL DUCTWORK, DUCT SUPPORTS AND DUCT ACCESSORIES SHALL BE OF ALUMINUM CONSTRUCTION.
4. PROVIDE THERMOSTAT AT SAME HEIGHT AS LIGHT SWITCHES. RE: ELECTRICAL SHEETS.

NOTES BY SYMBOL "⬡"

1. MOUNT AIR HANDLING UNIT ON MANUFACTURER PROVIDED STAND, IN VERTICAL ORIENTATION PER DETAIL 2/M-4. ENSURE THERE IS ADEQUATE CLEARANCE AROUND UNIT TO ALLOW FOR FILTER REPLACEMENT AND ROUTINE MAINTENANCE.
2. PROVIDE DUCT EQUAL IN SIZE TO UNIT OPENING AND ELBOW 1' AFTER UNIT DISCHARGE. TRANSITION TO 20/14 DUCT LESS THAN 2'-0" DOWNSTREAM FROM ELBOW.
3. PROVIDE AIR HANDLING UNIT WITH AUXILIARY CONDENSATE DRAIN PAN AND UL 508 APPROVED WATER LEVEL DETECTING DEVICE. HARDWIRE DEVICE TO SHUT DOWN UNIT IF TRIPPED.
4. PROVIDE CONCRETE EQUIPMENT PAD FOR AIR COOLED CONDENSING UNIT. REFER TO STRUCTURAL SHEETS FOR DETAILS ON CURB FABRICATION.
5. MOUNT SUPPLY AIR DUCT AS HIGH AS POSSIBLE AFF. SUPPORT DUCTWORK AT EACH JOIST AND NOT GREATER THAN 6'-0" C/C ALONG ANY JOIST.
6. FIXED BLADE LOUVER PROVIDED UNDER DIVISION 10. REFER TO LOUVER SCHEDULE ON SHEET M-4 FOR PERFORMANCE REQUIREMENTS AND DIMENSIONS. PROVIDE WITH ALUMINUM INSECT SCREEN ON INTERIOR FACE OF LOUVER. RE: ARCHITECTURE FOR EXACT INSTALLATION LOCATION.
7. ROUTE 1½" PVC AHU CONDENSATE DRAIN LINE AT A MINIMUM SLOPE OF ⅛" PER FOOT AND TERMINATE ABOVE FLOOR DRAIN FUNNEL WITH AIR GAP. CONDENSATE DRAIN LINE SHALL BE INSULATED WITH 1" ELASTOMERIC INSULATION.
8. ROUTE MECHANICAL REFRIGERANT LINES ABOVE CEILING AND PENETRATE EXTERIOR WALL HIGH. PROVIDE SLEEVES IN WALL FOR REFRIGERANT LINE PENETRATIONS. REFRIGERANT LINES SHALL BE INSULATED WITH MINIMUM 1" ELASTOMERIC INSULATION PER MANUFACTURER'S RECOMMENDATIONS.
9. MOUNT BOTTOM OF RETURN AIR TRANSFER GRILLE AT 8'-0" AFF.
10. OPEN DUCT EQUAL IN DIMENSION TO RETURN AIR GRILLE THROAT FOR RETURN AIR.
11. PROVIDE METAL JACKETING FOR EXPOSED REFRIGERANT PIPING.
12. SECURE REFRIGERANT PIPING TO WALL WITH STAINLESS STEEL STRAPS AND LOW-PROFILE WALL SUPPORTS.
13. BASEBOARD UNIT HEATER. SETPOINT 60°F (ADJ.).

This Record Drawing is a combination of the sealed engineering contract drawings for this project, modified by information furnished by the contractor reflecting changes in the Project made during construction. The original sealed drawings are on file at the offices of FREESE AND NICHOLS, INC.
RECORD DRAWINGS PREPARED ON: 6/24/2020

0 1' 2' 4'
3/8"=1'-0

Freese and Nichols, Inc.
Texas Registered Engineering Firm F-2144

ISSUED FOR CONSTRUCTION
ON 11/18/2016

THE SEAL THAT ORIGINALLY APPEARED ON THIS DOCUMENT WAS AUTHORIZED BY CHARLES C. SIMPSONS, P.E.
ALTERATION OF A SEALED DOCUMENT WITHOUT PROPER AUTHORITY TO DO SO IS PROHIBITED BY THE TEXAS ENGINEERING PRACTICE ACT
OFFENSE UNDER THE TEXAS ENGINEERING PRACTICE ACT

FREESE NICHOLS
4040 Broadway Street, Suite 600
San Antonio, Texas 78209-6350
Phone - (210) 826-3500
Fax - (210) 826-3901
Web - www.freese.com

CITY OF CASTROVILLE

WWTP CAPACITY EXPANSION PROJECT

MECHANICAL

ADMINISTRATION-ELECTRICAL BUILDING FLOOR PLAN

NO.	ISSUE	BY	DATE
2	RECORD DRAWINGS	EMH	06/24/20
1	ISSUED FOR CONSTRUCTION	CCS	11/18/16

VERIFY SCALE Bar is one inch on original drawing. If not one inch on this sheet, adjust scale.

FNI JOB NO. CVL14259
DATE 6/10/16
DESIGNED TMG
DRAWN TMG
REVISED -
CHECKED CCS
FILE NAME HV-ADM-PL-FLOR.dwg

SHEET M-2
SEQ. 89

ACAD Rel: 21.0s (LMS Tech)
Filename: N:\HVAC\HV-ADM-PL-FLOR.dwg
Last Saved: 6/24/2020 1:30 PM Saved By: 02864

Plot Date: 6/24/2020 1:34 PM Plot By: 02864 Filename: N:\HVAC\HV-ADM-PL-FLOR.dwg

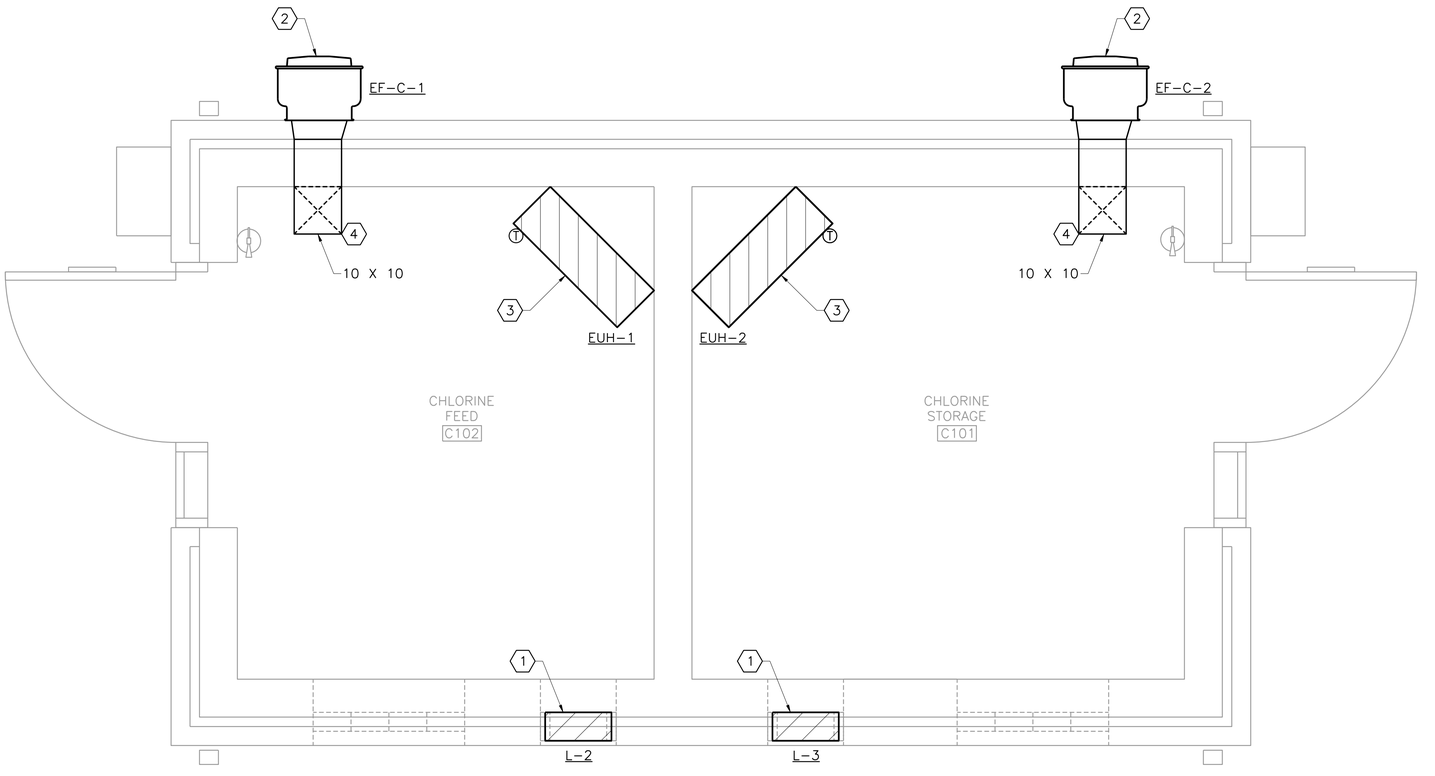

NORTH

1 CHLORINE BUILDING FLOOR PLAN
3/4"=1'-0"

GENERAL NOTES:

1. REFER TO SHEET M-1 FOR GENERAL NOTES, SYMBOLS AND ABBREVIATIONS.
2. REFER TO SHEET M-4 FOR MECHANICAL SCHEDULES AND DETAILS.

NOTES BY SYMBOL "⬡"

1. FIXED BLADE LOUVER PROVIDED UNDER DIVISION 10. REFER TO LOUVER SCHEDULE ON SHEET M-4 FOR PERFORMANCE REQUIREMENTS AND DIMENSIONS. PROVIDE WITH ALUMINUM INSECT SCREEN ON INTERIOR FACE OF LOUVER. RE: ARCHITECTURE FOR EXACT INSTALLATION LOCATION.
2. CENTRIFUGAL EXHAUST FAN. FAN TO RUN 24/7, AND ONLY SHUT DOWN UPON ENGAGING EMERGENCY SHUTDOWN SWITCH OUTSIDE OF ROOM. RE: ELECTRICAL SHEETS FOR MORE INFORMATION.
3. ELECTRIC UNIT HEATER RATED FOR HAZARDOUS LOCATION. MOUNT BOTTOM OF HEATER 8'-0" AFF. PROVIDE WITH INTEGRAL THERMOSTAT. SETPOINT 45°F (ADJ.). PROVIDE WITH SIDEWALL MOUNTING BRACKET. INSTALL TO AVOID CONFLICT WITH STORAGE MATERIALS AND OTHER UTILITIES.
4. TERMINATE EXHAUST DUCT 8" AFF. PROVIDE STAINLESS STEEL INSECT SCREEN AT OPENING.

This Record Drawing is a combination of the sealed engineering contract drawings for this project, modified by information furnished by the contractor reflecting changes in the Project made during construction. The original sealed drawings are on file at the offices of
FREESE AND NICHOLS, INC.
RECORD DRAWINGS PREPARED ON:
6/24/2020

0 6" 1' 2'
3/4"=1'-0

Freese and Nichols, Inc.
Texas Registered Engineering Firm F-2144

ISSUED FOR CONSTRUCTION
ON 11/18/2016

THE SEAL THAT ORIGINALLY APPEARED ON THIS DOCUMENT WAS AUTHORIZED BY CHRIS C. SPRAGGINS, P.E. TEXAS NO. 117069 ON 04/20/2016. ALTERATION OF A SEALED DOCUMENT WITHOUT PROPER NOTIFICATION OF THE RESPONSIBLE ENGINEER IS AN OFFENSE UNDER THE TEXAS ENGINEERING PRACTICE ACT.

FREESE AND NICHOLS
4040 Broadway Street, Suite 600
San Antonio, Texas 78209-6350
Phone - (210) 298-3800
Fax - (210) 298-3801
Web - www.freese.com

CITY OF CASTROVILLE
WWTP CAPACITY EXPANSION PROJECT
MECHANICAL
CHLORINE BUILDING FLOOR PLAN

NO.	ISSUE	BY	DATE
2	RECORD DRAWINGS	EMH	06/24/20
1	ISSUED FOR CONSTRUCTION	CCS	11/18/16

F&N JOB NO. CVL14259
DATE 6/10/16
DESIGNED TMG
DRAWN TMG
REVISED
CHECKED CCS
FILE NAME HV-CHL-PL-FLOR.dwg

VERIFY SCALE Bar is one inch on original drawing. If not one inch on this sheet, adjust scale.

SHEET M-3
SEQ. 90

ACAD Rel: 21.0s (LMS Tech)
Filename: N:\HVAC\HV-CHL-PL-FLOR.dwg
Last Saved: 6/24/2020 1:29 PM Saved By: 02864

Plot Date: 6/24/2020 1:34 PM Plot By: 02864 Filename: N:\HVAC\HV-CHL-PL-FLOR.dwg

ELECTRICAL UNIT HEATER SCHEDULE

MARK	SERVICE	TYPE	AIR FLOW (CFM)	THROW (FT)	MOUNTING HEIGHT (FT)	HTG ELEMENTS (QTY/KW)	ELEC DATA MCA	ELEC DATA VOLT/PH	MANUFACTURER/MODEL	NOTES
EUH-C-1,2	CHEMICAL FEED/STORAGE	HORIZ.	840	32	8	1/10	12.7	480/3	CHROMALOX/CXH-A-10-43-32-40-20EP 028580	1
EUH-E-1	RESTROOM	BASEBOARD	–	–	0 (FLOOR)	1/0.75	6.3	120/1	QMARK/CBD750	2
EUH-E-2	ADMIN AREA	BASEBOARD	–	–	0 (FLOOR)	1/2.0	7.2	208/1	QMARK/CBD1508	3,4

REMARKS:

1. PROVIDE WITH WALL MOUNTING BRACKET, BUILT-IN THERMOSTAT, BUILT-IN DISCONNECT SWITCH AND ALL ACCESSORIES.
2. PROVIDE WITH SINGLE POLE SNAP ACTION THERMOSTAT ASSEMBLY.
3. PROVIDE WITH 2 POLE DISCONNECT SWITCH/120V RECEPTACLE.
4. PROVIDE WITH 2 POLE SNAP ACTION THERMOSTAT ASSEMBLY.

DX SPLIT – SYSTEM AIR HANDLING UNIT SCHEDULE

MARK	TOTAL AIR FLOW (CFM)	OUTSIDE AIR FLOW (CFM)	EXT. S.P. (IN W.G.)	COOLING EAT (F°) DB/WB	COOLING LAT (F°) DB/WB	COOLING TOTAL CAP (MBH)	COOLING SENSIBLE CAP (MBH)	FAN HP	UNIT VOLT/PH	UNIT MCA	MANUFACTURER/MODEL
AHU-1	1900	100	0.5	77/64	56/54	55.0	44.0	2.0	480/3	34.5	ENGINEERED AIR/LM4/C/H

REMARKS:

1. UNIT SHALL BE 316L STAINLESS STEEL CONSTRUCTION.
2. SUPPLY FAN TO BE ALL ALUMINUM WHEEL CONSTRUCTION WITH PILLOW BLOCK BEARINGS.
3. FINAL FILTER TO INCLUDE LOOSE FILL 6% POTASSIUM PERMANGANATE, CAMFIL CAMPURE 6XL OR EQUAL FOR H2S SCRUBBING.
4. COOLING COIL TO BE TWO CIRCUITS, ALTERNATE TUBE CIRCUITING, ELECTROFIN COATING WITH STAINLESS STEEL CASING.
5. ELECTROFIN COATING OR OTHER ENGINEERED APPROVED H2S RESISTANT COATING SHALL BE APPLIED TO REFRIGERANT HOT GAS AND SUCTION LINES.
6. INCLUDE TXV, LIQUID LINE SOLENOID, SIGHT GLASS, AND FILTER DRIER FACTORY INSTALLED AND PIPED.
7. PROVIDE SINGLE POINT POWER CONNECTION AND FUSED DISCONNECT SWITCH.
8. COOLING SETPOINT = 75°F,
9. PROVIDE WITH AUXILIARY STAINLESS STEEL DRAIN PAN WITH WATER LEVEL DETECTING DEVICE TO SHUT DOWN UNIT UPON SENSURE OF WATER.
10. PROVIDE WITH PROGRAMMABLE 7-DAY UNIT CONTROLLER/THERMOSTAT FROM FACTORY. THERMOSTAT SHALL HAVE A 5°F DEADBAND.

DX SPLIT-SYSTEM AIR COOLED CONDENSING UNIT SCHEDULE

MARK	SERVICE	TOT CAPACITY (MBH)	SEN CAPACITY (MBH)	AMBIENT (°F)	CIRCUITS (QTY)	MCA	MOP	VOLT/PH	MANUFACTURER/MODEL
ACCU-1	PUMP ROOM	55.0	44.0	105	1	14.6	20	480/3	ENGINEERED AIR/CU52

REMARKS:

1. UNIT SHALL BE 316L STAINLESS STEEL CONSTRUCTION.
2. CONDENSER COIL TO BE TWO CIRCUITS, WITH SUB-COOLING, ELECTRO-FIN COATING WITH STAINLESS STEEL CASING.
3. PROVIDE SINGLE POINT POWER CONNECTION AND FUSED DISCONNECT SWITCH.

DIFFUSER, REGISTER AND GRILLE SCHEDULE

MARK	LOCATION	TYPE	MAX AIRFLOW CFM	NECK SIZE	FACE SIZE	MANUFACTURER\MODEL	NOTES
A	SIDEWALL	SUPPLY	–	18"X10"	20"x12"	TITUS\300RS-SS	1,2,3
B	CEILING	SUPPLY	–	10" ø	24"x24"	TITUS\TMSAA	1,2,3
C	CEILING	SUPPLY	–	6" ø	12"x12"	TITUS\TMSAA	1,2,3
D	RETURN	SIDEWALL	–	30"X16"	32"x18"	TITUS\350RS-SS	1,2,3
E	RETURN	CEILING	–	22"X22"	24"x24"	TITUS\50R-SS	1,2,3

NOTES:

1. UNITS SHALL BE FURNISHED WITH APPROPRIATE FRAMES, ETC. FOR MOUTING ON LOCATION INDICATED IN SCHEDULE
2. FINISH/PAINT COLOR SHALL BE OFF-WHITE
3. SOUND VALUES SHALL NOT EXCEED 25 NC (ROOM), UNLESS OTHERWISE NOTED.

EXHAUST FAN SCHEDULE

MARK	TYPE	SERVES	CFM	EXT SP IN. WG	MOTOR DATA HP	MOTOR DATA RPM	MOTOR DATA VOLTS	MOTOR DATA PH	MAX. SONES	MANUFACTURER/MODEL	NOTES
EF-E-1	CEILING	RESTROOM	100	0.15	1/3	1725	115	1	13.3	GREENHECK/SP-B110	1,2,3,4,5
EF-C-1	CENTRIFUGAL WALL	CHLORINE STORAGE	85	0.20	1/100	1300	115	1	2.5	GREENHECK/CW-060-G	1,2,6,7,8
EF-C-2	CENTRIFUGAL WALL	CHLORINE FEED	85	0.20	1/100	1300	115	1	2.5	GREENHECK/CW-060-G	1,2,6,7,8

NOTES:

1. PROVIDE WITH BACKDRAFT DAMPER.
2. PROVIDE OSHA APPROVED MOTOR SIDE GUARDS.
3. UNIT SHALL BE INTERLOCKED WITH RESTROOM LIGHT SWITCH.
4. PROVIDE WITH ALUMINUM WALL CAP FROM FACTORY.
5. PROVIDE WITH PLASTIC INLET GRILLE.
6. PROVIDE WITH 90 DEGREE, STAINLESS STEEL WEATHER HOOD.
7. PROVIDE WITH STAINLESS STEEL WALL HOUSING.
8. PROVIDE WITH STAINLESS STEEL INSECT SCREEN.

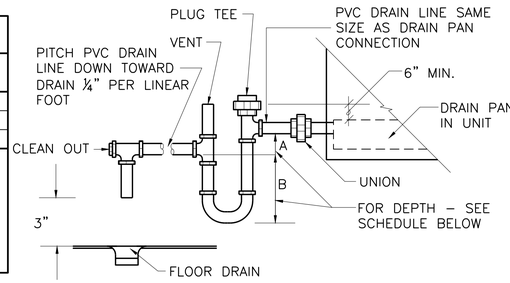

UNIT TYPE	A	B
DRAW-THRU	1" MIN.	1.5X
BLOW-THRU	1" MIN.	2.0X

WHERE X = SCHEDULED FAN STATIC PRESS.

1 – TYPICAL A/C CONDENSATE PIPING
NOT TO SCALE

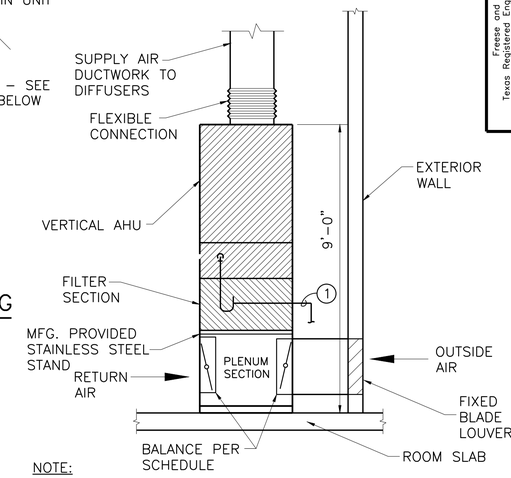

NOTE:

1. ROUTE CONDENSATE DRAIN PIPING AT A MINIMUM SLOPE OF 1/8" PER FOOT.

2 – FLOOR MOUNTED AIR HANDLING UNIT
NOT TO SCALE

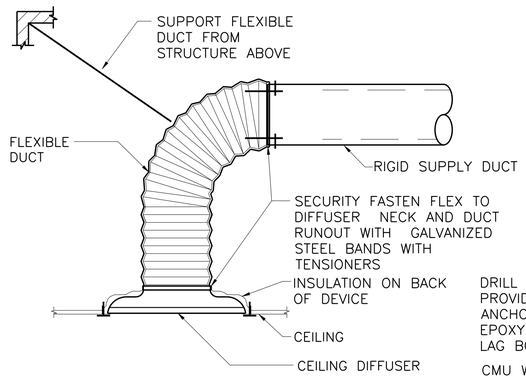

INSTALLATION REQUIREMENTS

1. FLEXIBLE DUCT MAXIMUM LENGTH IS 5'-0". SPLICES ARE NOT PERMITTED.
2. USE OF FLEXIBLE DUCT IN LIEU OF RIGID DUCT IS OPTIONAL.
3. MAXIMUM CHANGE IN DIRECTION IS 50°, MINIMUM BEND RADIUS IS 1½ TIMES DUCT DIAMETER. DO NOT CRIMP DUCT.

3 – AIR DEVICE FLEX CONNECTION DETAIL
NOT TO SCALE

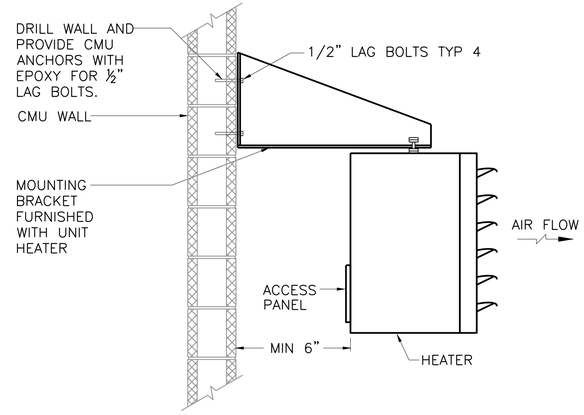

4 – ELECTRIC UNIT HEATER DETAIL
NOT TO SCALE

FIXED BLADE LOUVER SCHEDULE

MARK	TYPE	SERVICE	NOMINAL CFM	NOMINAL SIZE (HxW)	MIN. NET FREE AREA (%)	MAX.-AIR PRESS. DROP (IN. WATER)	BLADE ANGLE (DEGREES)	MANUFACTURER / MODEL
L-1	INTAKE	ELECTRICAL BUILDING – MECH. ROOM	100	14" x 16"	56	0.04	37.5	GREENHECK/ESD-435
L-2	INTAKE	CHEMICAL BUILDING – CHEM. FEED	245	14" x 16"	56	0.04	37.5	GREENHECK/ESD-435
L-3	INTAKE	CHEMICAL BUILDING – CHEM. INJECTION	245	14" x 16"	56	0.04	37.5	GREENHECK/ESD-435

REMARKS:

1. LOUVER CONSTRUCTION TO BE ALUMINUM.
2. PROVIDE ALUMINUM BIRD SCREEN ON INSIDE FACE.
3. ARCHITECT TO SELECT FINISH.
4. INSTALL LOUVER IN EXTERIOR MASONRY WALL PER DETAIL 6/A-004 AND AT HEIGHTS/LOCATIONS PER THE OPENING SCHEDULE ON SHEET A-002.

This Record Drawing is a combination of the sealed engineering contract drawings for this project, modified by information furnished by the contractor reflecting changes in the Project made during construction. The original sealed drawings are on file at the offices of FREESE AND NICHOLS, INC. RECORD DRAWINGS PREPARED ON: 6/24/2020

Freese and Nichols, Inc.
Texas Registered Engineering Firm F-2144

ISSUED FOR CONSTRUCTION ON 11/18/2016

THE SEAL THAT ORIGINALLY APPEARED ON THIS DOCUMENT WAS AUTHORIZED BY CHARLES C. SPRIGGINS, P.E.
ALTERATION OF A SEALED DOCUMENT WITHOUT PROPER AUTHORIZATION AND SUBSEQUENT DISTRIBUTION IS AN OFFENSE UNDER THE TEXAS ENGINEERING PRACTICE ACT

FREESE NICHOLS
4040 Broadway Street, Suite 600
San Antonio, Texas 78209-6350
Phone: (210) 298-8000
Fax: (210) 298-8901
Web – www.freese.com

CITY OF CASTROVILLE
WWTP CAPACITY EXPANSION PROJECT
MECHANICAL
SCHEDULES AND DETAILS

F&N JOB NO.	CVL14259
DATE	6/10/16
DESIGNED	TMG
DRAWN	TMG
CHECKED	CCS
FILE NAME	HV-CVL-GN-DTLS.dwg

NO.	ISSUE	BY	DATE
2	RECORD DRAWINGS	EMH	06/24/20
1	ISSUED FOR CONSTRUCTION	CCS	11/18/16

VERIFY SCALE Bar is one inch on original drawing. If not one inch on this sheet, adjust scale.
0 1"

SHEET M-4
SEQ. 91

ACAD Rel: 21.0s (LMS Tech)
Filename: N:\HVAC\HV-CVL-GN-DTLS.dwg
Last Saved: 6/24/2020 1:19 PM Saved By: 02864

Plot Date: 6/24/2020 1:35 PM Plot By: 02864 Filename: N:\HVAC\HV-CVL-GN-DTLS.dwg

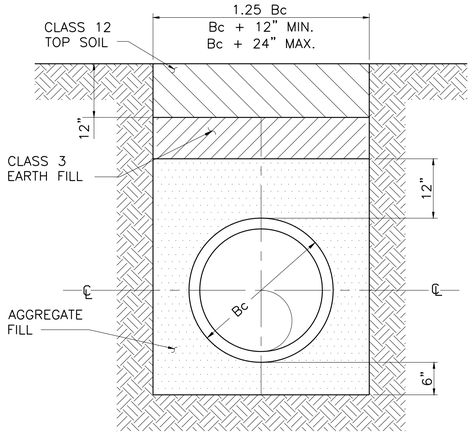

TRENCH TYPE A
TYPICAL TRENCH DETAIL
NOT TO SCALE

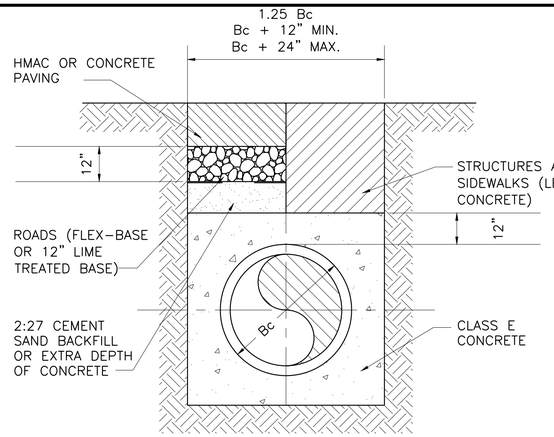

TRENCH TYPE C
UNDER ROADS, STRUCTURES, AND SIDEWALKS
(EXTEND FOR 5'-0" ON EITHER SIDE OF PAVED AREAS)
NOT TO SCALE

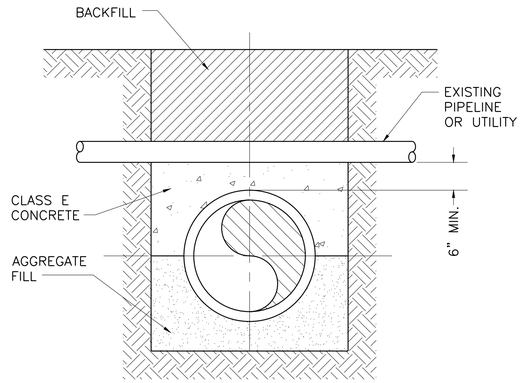

1 SECTION
NOT TO SCALE

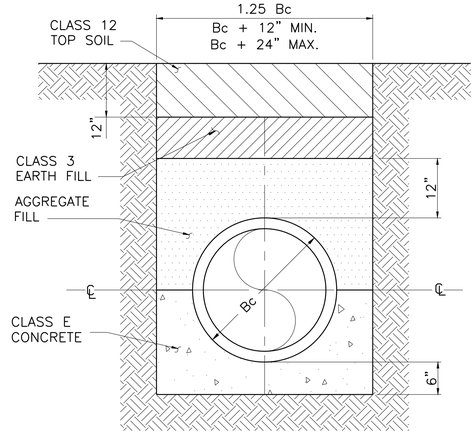

TRENCH TYPE B
OUT TO FIRST JOINT
FROM STRUCTURE PENETRATION
NOT TO SCALE

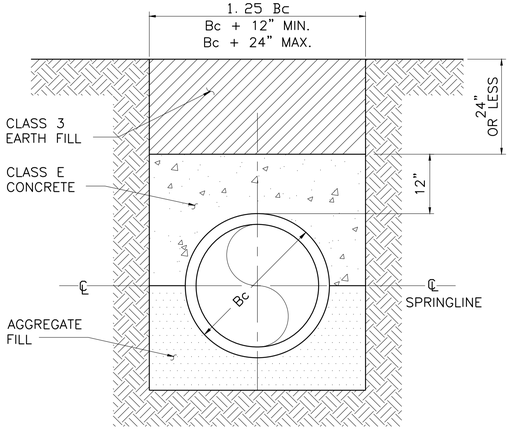

TRENCH TYPE D
SHALLOW BURIAL DEPTH
NOT TO SCALE

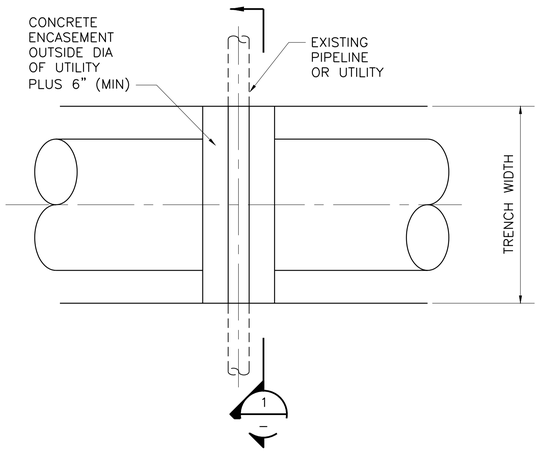

TYPICAL DETAIL OF PIPELINE OR UTILITY CROSSING
NOT TO SCALE

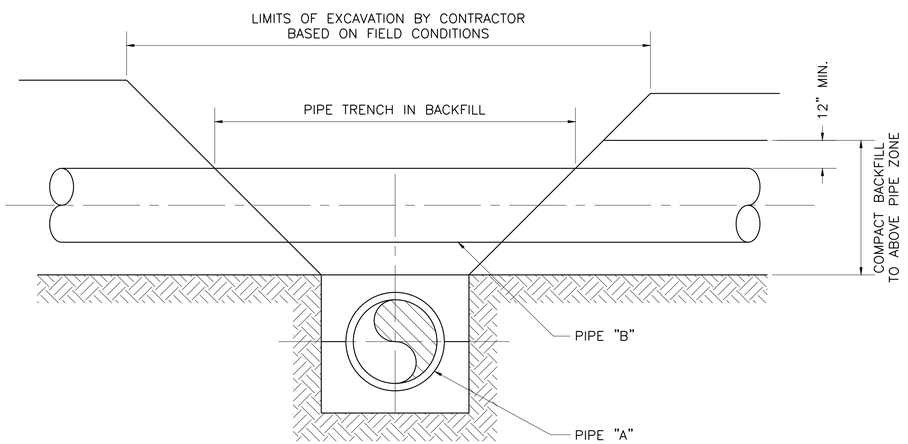

TRENCH DETAIL 2 OR MORE PIPES 1 2 3
NOT TO SCALE

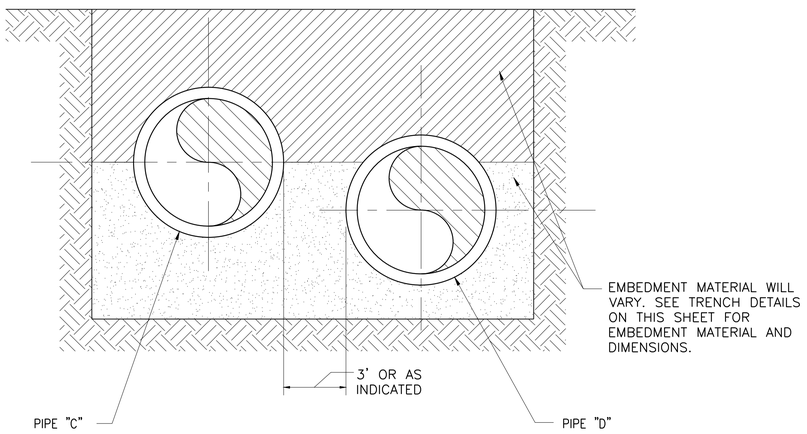

TRENCH DETAIL FOR 2 OR MORE PIPES IN SAME TRENCH 4 5
NOT TO SCALE

GENERAL TRENCH NOTES

1. THIS DRAWING IS ISSUED TO SHOW PIPE BEDDING AND BACKFILL REQUIREMENTS AND NOT FOR THE PURPOSE OF SHOWING TRENCH EXCAVATION REQUIREMENTS RELATED TO TRENCH SAFETY SYSTEMS. SEE OTHER PORTIONS OF THE CONTRACT DOCUMENTS FOR TRENCH SAFETY SYSTEM REQUIREMENTS.
2. MAXIMUM TRENCH WIDTH OF Bc + 24 INCHES MAY BE INCREASED AS REQUIRED TO PROVIDE ROOM FOR SHORING OR OTHER TRENCH SAFETY SYSTEMS, INCLUDING SLOPING OF TRENCH WALLS.
3. DEWATERING OF TRENCHES SHALL BE PERFORMED BY CONTRACTOR AS REQUIRED.
4. UNLESS OTHERWISE SPECIFIED OR SHOWN, USE TRENCH TYPE D FOR SHALLOW YARD PIPING.
5. REFER TO SPECIFICATION 31 05 16 FOR AGGREGATE FILL MATERIAL DETAILS.
6. LOCATIONS FOR TRENCH TYPE SHALL BE AS INDICATED ON THIS SHEET, UNLESS NOTED OTHERWISE.
7. PCCP AND RCCP TRENCH WIDTH SHALL BE B_C+24" MIN. AND B +36" MAX. C
8. FOR FLEXIBLE PIPE COMPLY WITH TRENCH TYPE C FOR SHALLOW BURIAL DEPTH INSTALLATIONS.
9. INSTALLATION OF FLEXIBLE PIPE FROM STRUCTURES SHALL COMPLY WITH TRENCH TYPE C DETAIL. EXTEND CONCRETE ENCASEMENT TO TRENCH DITCH LINE OF A MINIMUM OF 3 FT. PASSED THE FIRST JOINT FROM THE STRUCTURE.
10. REFER TO STANDARD DETAIL 370 FOR CONCRETE ENCASEMENT DETAILS AT PIPE FITTING.

FINAL BACKFILL PLACEMENT

FROM 12" ABOVE THE TOP OF THE PIPE, OR AS SHOWN ON THE DRAWINGS, THE TRENCH OR EXCAVATION SHALL BE BACKFILLED WITH SELECT MATERIAL FROM THE EXCAVATION PLACED IN A MANNER APPROVED BY THE ENGINEER. NO EXCESSIVELY LARGE ROCKS (LARGEST DIMENSION GREATER THAN 2") OR DEBRIS OF ANY SORT ARE TO BE PUT INTO THE BACKFILL, AND APPRECIABLE WEIGHT OF ANY SORT, OTHER THAN BACKFILL, SHALL NOT BE ALLOWED ON THE PIPE UNTIL IT HAS BEEN COVERED TO SUCH A DEPTH THAT DAMAGE TO THE PIPE OR JOINTS WILL NOT OCCUR. THE TOP 6" SHALL BE FREE FROM ROCK.

AGGREGATE FILL MATERIAL		
	PIPE MATERIAL/TYPE	AGGREGATE FILL
1	REINFORCED CONCRETE	CLASS 2
2	CONCRETE CYLINDER	CLASS 2
3	PLAIN CONCRETE	CLASS 10
4	STEEL	CLASS 3
5	DUCTILE IRON/CAST IRON	CLASS 3
6	CORRUGATED METAL	CLASS 3
7	PLASTIC	CLASS 10
8	VITRIFIED CLAY	CLASS 10
9	FIBERGLASS REINFORCED POLYMER	CLASS 10 COMPACTED TO 95% SPD OR CLASS 11, OR CLASS 12

NOTES BY SYMBOL ⬡ :

1. COMPACT PIPE "A'" BACKFILL TO ABOVE PIPE "B" PIPE ZONE TO 95% MAXIMUM DENSITY PER ASTM D694.
2. EXCAVATE PIPE "B" TRENCH.
3. USE PIPE EMBEDMENT AS SPECIFIED ON DRAWING FOR PIPE "B".
4. WHEN DISTANCE BETWEEN TWO PARALLEL PIPES (PIPES "C" AND "D") AT APPROXIMATELY THE SAME ELEVATION IS SUCH THAT SEPARATE TRENCHED CANNOT BE DUG, THEN USE THIS DETAILS.
5. PIPE EMBEDMENT SHALL BE AS SPECIFIED ON DRAWING FOR SHALLOWEST PIPE (PIPE "C"). EMBEDMENT FOR POLYETHYLENE WRAPPED OR PLASTIC PIPE SHALL EXTEND TO 12" OVER THE TOP OF THE PIPE.

This Record Drawing is a combination of the sealed engineering contract drawings for this project, modified by information furnished by the contractor reflecting changes in the Project made during construction. The original sealed drawings are on file at the offices of
FREESE AND NICHOLS, INC.
RECORD DRAWINGS PREPARED ON:
06/24/20

Freese and Nichols, Inc.
Texas Registered Engineering Firm F-2144

THE SEAL (IM) ORIGINALLY APPEARED ON THIS DOCUMENT WAS AUTHORIZED BY (NAME) _____ DATE _____ ON BEHALF OF (COMPANY) _____. ALTERATION OF A SEALED DOCUMENT WITHOUT PROPER NOTIFICATION TO THE ENGINEER IS A VIOLATION OF THE LAW TO OFFENSE UNDER THE TEXAS ENGINEERING PRACTICE ACT

FREESE NICHOLS
4040 Broadway Street, Suite 600
San Antonio, Texas 78209-6350
Phone - (210) 829-5800
Fax - (210) 828-6501
Web - www.freese.com

CITY OF CASTROVILLE

WWTP CAPACITY EXPANSION PROJECT

STANDARD DETAILS

STANDARD MECHANICAL DETAILS #1

NO.	ISSUE	BY	DATE
	RECORD DRAWINGS	CCG	06/24/20
1	ISSUED FOR CONSTRUCTION	CCG	11/16/16

VERIFY SCALE Bar is one inch on original drawing. If not one inch on this sheet, adjust scale.
0 1"

R&W JOB NO.	CVL14259
DATE	6/10/16
DESIGNED	CCG
DRAWN	DDH
REVISED	-
CHECKED	TWS
FILE NAME	CV-PPL-DT-PIPE.dwg

SHEET SD-1
SEQ.

ACAD Rel: 21.0s (LMS Tech)
Filename: N:\WW\Drawings\CV-PPL-DT-PIPE.dwg
Last Saved: 10/8/2019 5:02 PM Saved By: 03576
Plot Date: 6/18/2020 5:48 PM Plot By: 90119 Filename: N:\WW\Drawings\CV-PPL-DT-PIPE.dwg

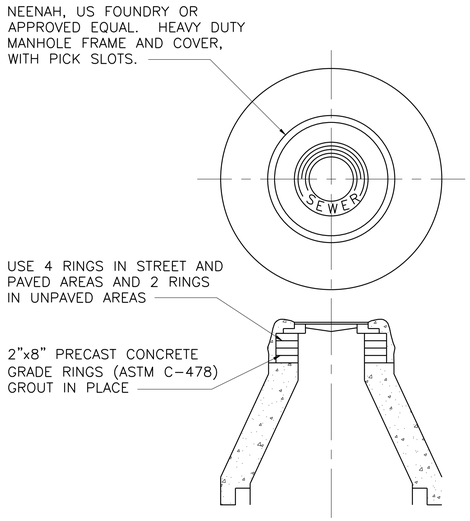

300 — STANDARD MANHOLE (PRECAST SHOWN)

NOT TO SCALE

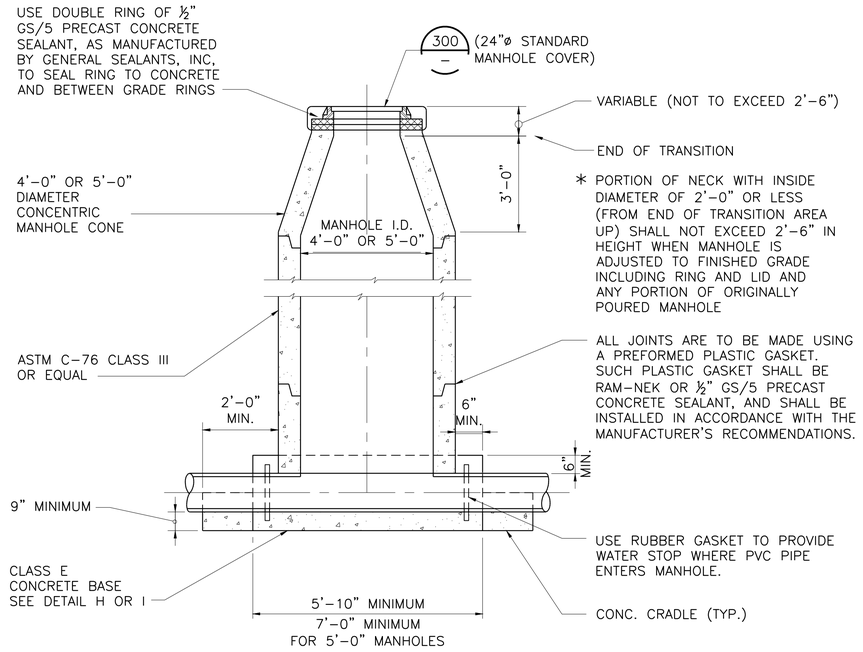

302 TYPE A — PRECAST CONCRETE MANHOLE

NOT TO SCALE

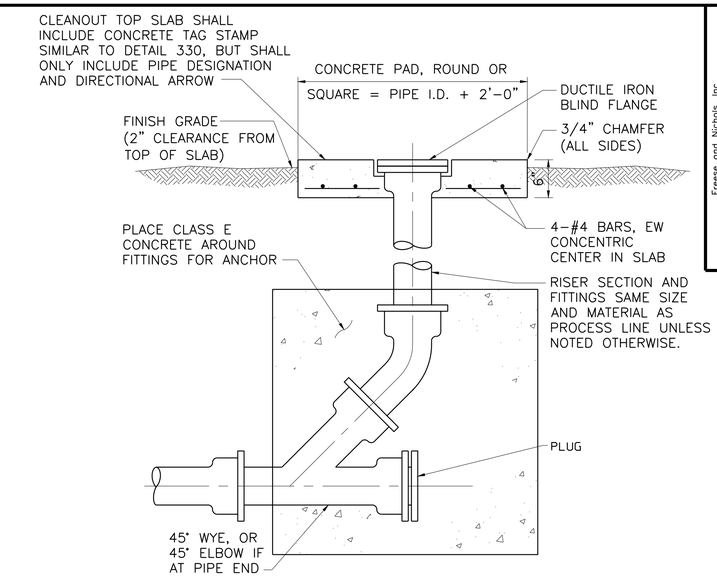

311 — CLEANOUT DETAIL

NOT TO SCALE

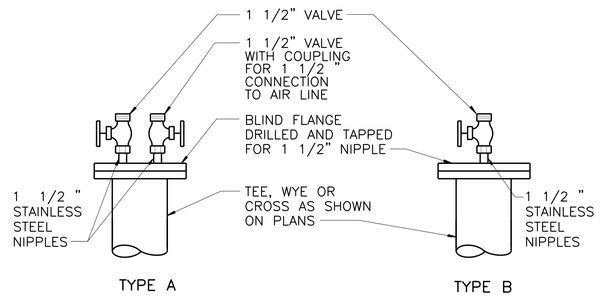

313 — FLUSHING CONNECTION

NOT TO SCALE

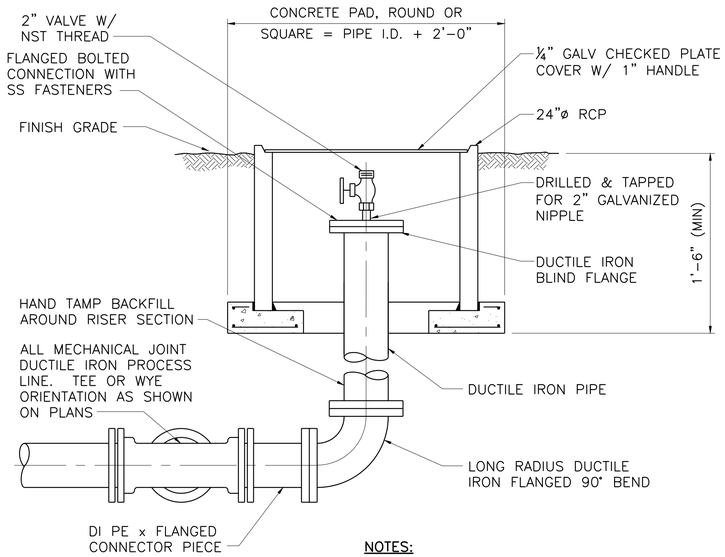

NOTES:
1. RISER SECTION AND ELBOW SAME SIZE AS PROCESS LINE UNLESS NOTED OTHERWISE.
2. PROVIDE RESTRAINT JOINTS FOR THRUST.
3. TYPICAL 4 LOCATIONS.

312 TYPE A — FLUSHING DETAIL

NOT TO SCALE

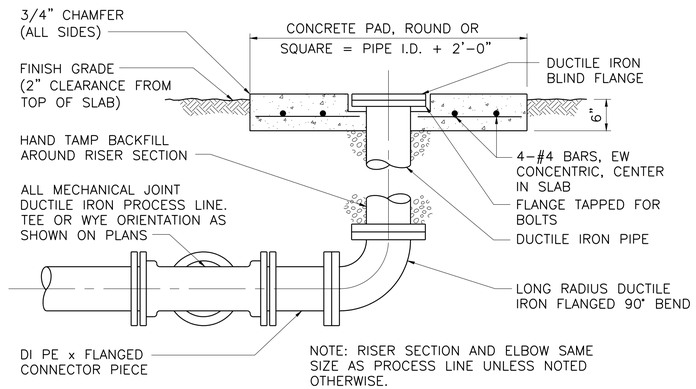

312 — PROCESS LINE CLEANOUT SETTING

NOT TO SCALE

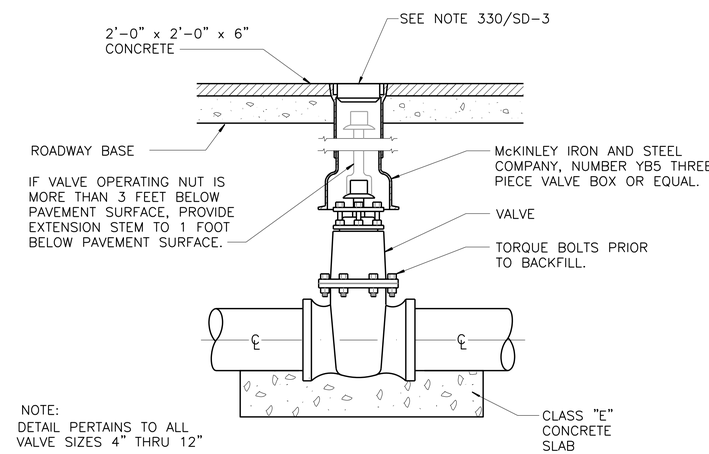

NOTE:
DETAIL PERTAINS TO ALL VALVE SIZES 4" THRU 12"

319 — TYPICAL VALVE AND BOX, EXTENSION STEM DETAIL

NOT TO SCALE

This Record Drawing is a combination of the sealed engineering contract drawings for this project, modified by information furnished by the contractor reflecting changes in the Project made during construction. The original sealed drawings are on file at the offices of
FREESE AND NICHOLS, INC.
RECORD DRAWINGS PREPARED ON: 06/24/20

Freese and Nichols, Inc.
Texas Registered Engineering Firm F-2144

THE SEAL HAS ORIGINALLY APPEARED ON THIS DOCUMENT WAS AUTHORIZED BY KORY A. GEE, P.E. ON 6/10/16. IT IS A VIOLATION OF SEALED DOCUMENT WITHOUT PROPER ALTERATION OF A SEALED DOCUMENT WITHOUT PROPER NOTIFICATION TO THE ENGINEER. ANY ALTERATION IS AN OFFENSE UNDER THE TEXAS ENGINEERING PRACTICE ACT

FREESE NICHOLS
4040 Broadway Street, Suite 600
San Antonio, Texas 78209-6350
Phone (210) 824-3500
FAX (210) 826-2901
Web - www.freese.com

CITY OF CASTROVILLE

WWTP CAPACITY EXPANSION PROJECT

STANDARD DETAILS

STANDARD MECHANICAL DETAILS #2

NO.	ISSUE	BY	DATE
	RECORD DRAWINGS	CCG	06/24/20
1	ISSUED FOR CONSTRUCTION	CCG	11/16/16

F&N JOB NO. CVL14259 | DATE 6/10/16 | DESIGNED CCG | DRAWN DDH | CHECKED TWS | REVISED | FILE NAME mp-all-dt-typl01.dwg

VERIFY SCALE Bar is one inch on original drawing. If not one inch on this sheet, adjust scale. 0" 1"

SHEET SD-2

SEQ.

ACAD Rel: 21.0s (LMS Tech)
Filename: N:\WW\Drawings\mp-all-dt-typl01.dwg
Last Saved: 10/8/2019 5:16 PM Saved By: 03576

Plot Date: 6/18/2020 5:48 PM Plot By: 90119 Filename: N:\WW\Drawings\mp-all-dt-typl01.dwg

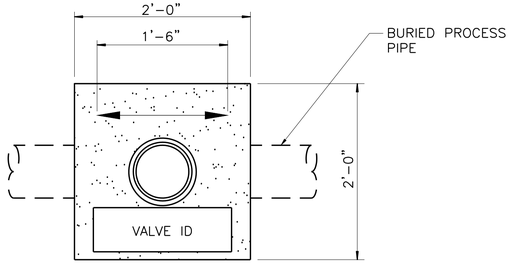

PLAN

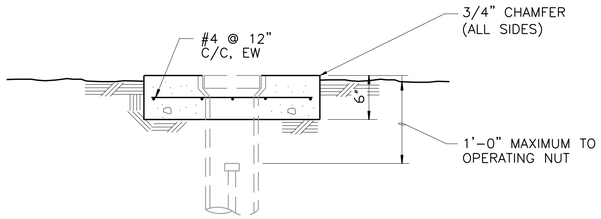

SECTION

TYPE A
VALVE BOX MARKING SLAB
FOR LINES LESS THAN OR EQUAL TO 12"

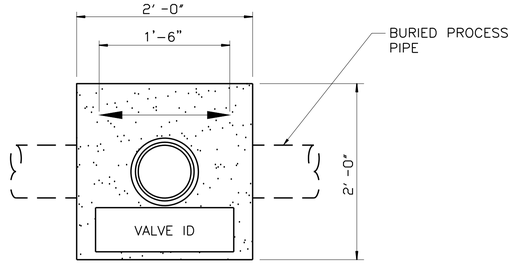

PLAN

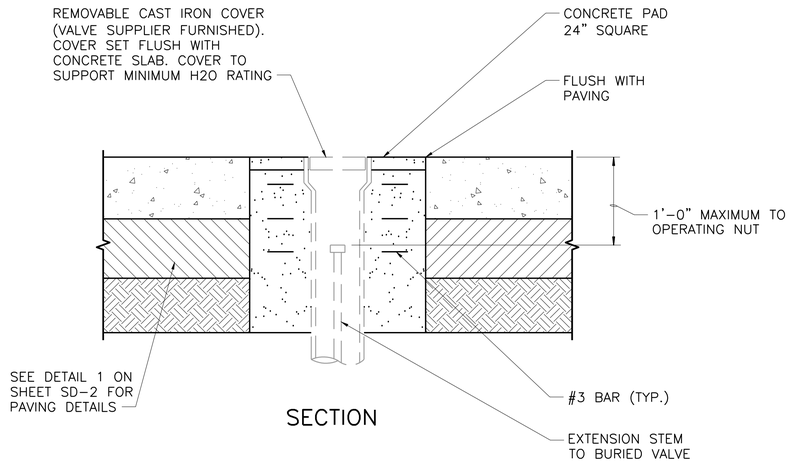

SECTION

TYPE B
VALVE BOX MARKING SLAB IN ROADWAY PAVING
FOR LINES LESS THAN OR EQUAL TO 12"

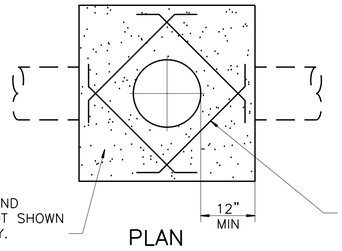

PLAN

TYPE C
VALVE BOX MARKING SLAB
FOR LINES GREATER THAN 12"

NOTES:

1. CONTRACTOR TO PREPARE VALVE BOX TAG STAMP SCHEDULE FOR APPROVAL BY THE ENGINEER PRIOR TO CONSTRUCTION. THE VALVE BOX TAG STAMP SCHEDULE WILL INCLUDE A COMPLETE LIST OF VALVE ID'S TO BE STAMPED.
2. CONTRACTOR SHALL COMPLETE VALVE BOX MARKING SLAB WORK AS INDIVIDUAL PIPELINES ARE COMPLETED.
3. TYPE A SLAB TO BE INSTALLED AROUND VALVE BOXES FOR 12" LINES OR LESS. FOR LINES GREATER THAN 12" IN SIZE, CONTRACTOR SHALL CONFORM TO TYPE C. CONTRACTOR SHALL CHAMFER ALL CORNERS.
4. FOR VALVE BOX MARKING SLABS (FOR LINES ≤ 12") IN ROADWAYS, VALVE BOX MARKING SLAB SHALL CONFORM TO TYPE B.
5. CONCRETE TAG STAMP SHALL INCLUDE 2" TALL LETTERS THAT ARE 1/2" DEEP WITH THE FOLLOWING IDENTIFICATION DATA:
   - –VALVE ID, TO INCLUDE:
     NOMINAL VALVE SIZE (IN.)–TYPE OF VALVE BODY – TYPE OF OPERATOR
     EXAMPLE: 12–BUV–E
   - –PIPE LAYOUT DIRECTION ARROWS. CONTRACTOR TO PLACE ARROW ON THE OPPOSITE SIDE OF THE VALVE ID. ARROWS TO BE UNIDIRECTIONAL OR BIDIRECTIONAL DEPENDING ON THE PROCESS STREAM.
6. ALL TAGS SHALL HAVE THE SAME DIMENSIONS, AND THE SAMPLE SHALL BE APPROVED BY THE OWNER. CONTRACTOR SHALL GIVE ALL STAMPING EQUIPMENT TO OWNER AFTER ALL VALVE BOX MARKING SLABS HAVE BEEN STAMPED.

330 VALVE BOX MARKING SLAB
NOT TO SCALE

This Record Drawing is a combination of the sealed engineering contract drawings for this project, modified by information furnished by the contractor reflecting changes in the Project made during construction. The original sealed drawings are on file at the offices of
FREESE AND NICHOLS, INC.
RECORD DRAWINGS PREPARED ON:
06/24/20

Freese and Nichols, Inc.
Texas Registered Engineering Firm F-2144

THE SEAL (IM) ORIGINALLY APPEARED ON THIS DOCUMENT WAS AUTHORIZED BY CHRIS C. GEE P.E.
ALTERATION OF A SEALED DOCUMENT WITHOUT PROPER AUTHORIZATION AND ADDITION OF A FALSE SEAL IS AN OFFENSE UNDER THE TEXAS ENGINEERING PRACTICE ACT

FREESE NICHOLS
4040 Broadway Street, Suite 600
San Antonio, Texas 78209-6350
Phone - (210) 829-3800
Fax - (210) 829-3901
Web - www.freese.com

CITY OF CASTROVILLE
WWTP CAPACITY EXPANSION PROJECT
STANDARD DETAILS
STANDARD MECHANICAL DETAILS #3

NO.	ISSUE	BY	DATE
	RECORD DRAWINGS	CCG	06/24/20
1	ISSUED FOR CONSTRUCTION	CCG	11/16/16

VERIFY SCALE Bar is one inch on original drawing. If not one inch on this sheet, adjust scale.
0" 1"

F&N JOB NO. CVL14259
DATE 6/10/16
DESIGNED CCG
DRAWN DDH
CHECKED TWS
FILE NAME mp-all-dt-typl02B.dwg

SHEET SD-3
SEQ.

ACAD Rel: 21.0s (LMS Tech)
Filename: N:\WW\Drawings\mp-all-dt-typl02B.dwg
Last Saved: 10/8/2019 5:16 PM Saved By: 03576
Plot Date: 6/18/2020 5:48 PM Plot By: 90119 Filename: N:\WW\Drawings\mp-all-dt-typl02B.dwg

NOTES:

1. PROVIDE 1" MINIMUM THICKNESS OF CEMENT MORTAR COATING IN THE FIELD FOR THE PROTECTION OF ALL EXPOSED STEEL SUCH AS FLANGES THREADED OUTLETS, CLOSURES, ETC. THE CEMENT MORTAR USED SHALL CONSIST OF ONE PART PORTLAND CEMENT TO TWO AND ONE HALF PARTS OF FINE, SHARP (PLASTER) SAND. WHERE SHOWN, COATING IS TO BE REINFORCED WITH WIRE MESH.
2. WHERE DIRECTED BY THE ENGINEER, TWO COATS OF AN APPROVED COAL TAR BASE COATING SHALL BE USED IN LIEU OF CEMENT MORTAR.
3. SURFACES RECEIVING A CEMENT MORTAR COATING SHALL BE THOROUGHLY CLEAN AND WETTED WITH WATER JUST PRIOR TO PLACING THE CEMENT MORTAR COATING. AFTER PLACEMENT, CARE SHALL BE TAKEN TO PREVENT CEMENT MORTAR COATING FROM DRYING TOO RAPIDLY. CEMENT MORTAR COATING SHALL NOT BE APPLIED DURING FREEZING WEATHER.
4. COAL TAR BASED COATINGS SHALL BE APPLIED COLD IN A THICK CONSISTENCY ON A WELL CLEANED SURFACE, IN ACCORDANCE WITH MANUFACTURERS RECOMMENDATIONS.

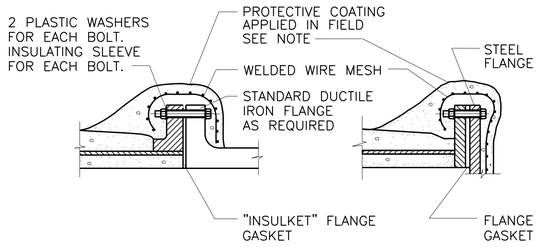

335 FLANGED CONNECTIONS
NOT TO SCALE

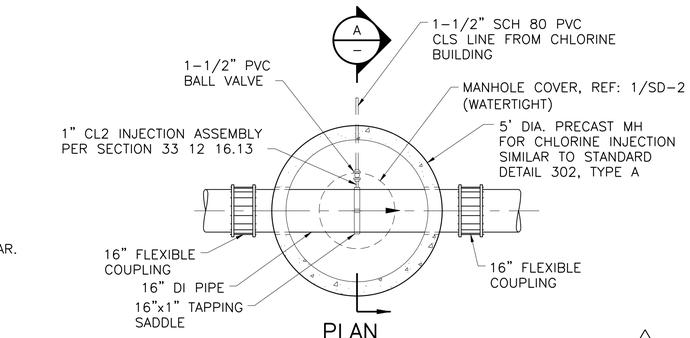

NOTE:

1. CHLORINE PIPING SHOWN IS SCHEMATIC IN NATURE. PROVIDE APPURTENANCES AS APPROPRIATE TO CONNECT TO 1" INJECTION ASSEMBLY.

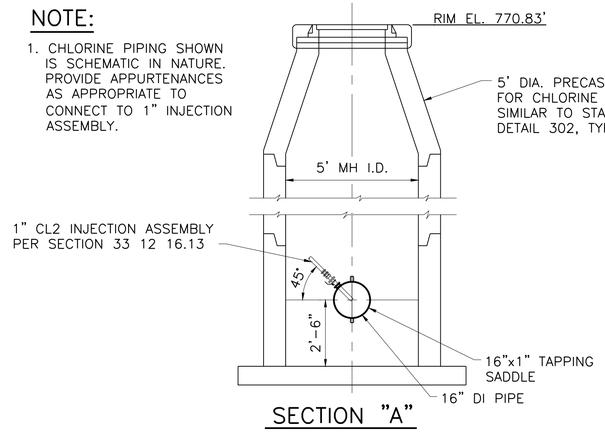

336 CHLORINE INJECTION MANHOLE
NOT TO SCALE

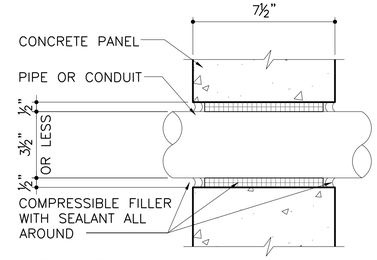

337 TYPICAL CONCRETE PANEL SMALL PIPE PENETRATION
NOT TO SCALE

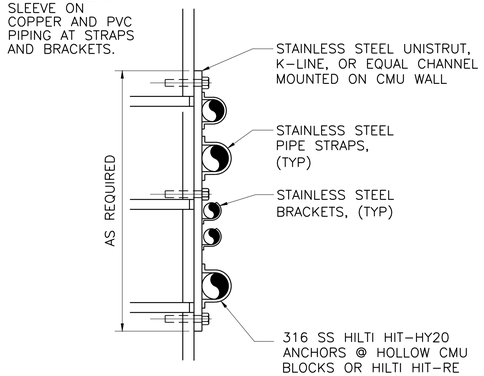

338 WALL MOUNTED PIPE SUPPORT
NOT TO SCALE

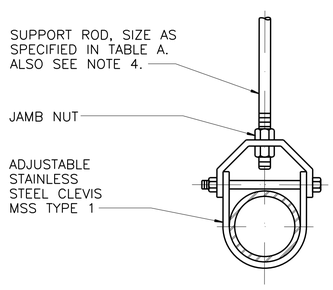

TYPE A PIPE HANGER
1/2" THROUGH 12" PIPE

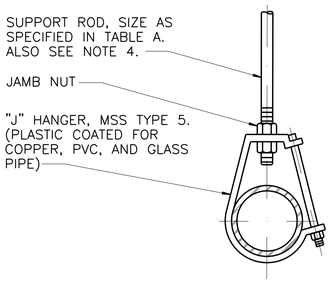

TYPE B PIPE HANGER
1/2 " THROUGH 8" PIPE

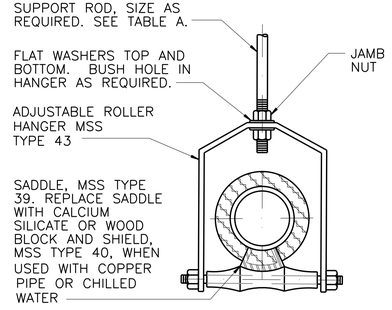

TYPE C PIPE HANGER
3/8 " THROUGH 8" PIPE

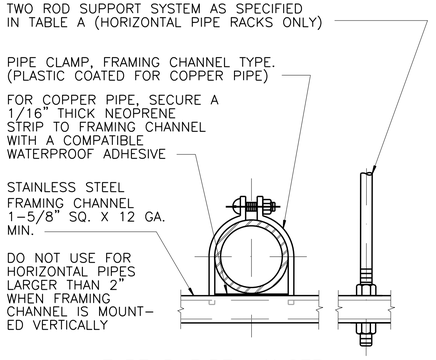

TYPE D PIPE HANGER
3/8 " THROUGH 12" PIPE

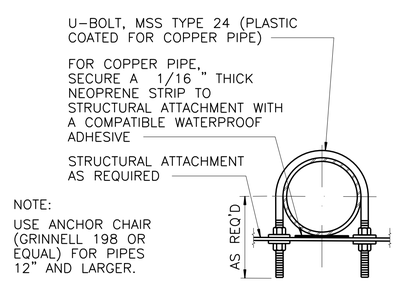

TYPE E PIPE HANGER
1/2 " THROUGH 24" PIPE

NOTE:
UNLESS OTHERWISE SPECIFIED, HANGERS AND SUPPORT SHALL BE 316 STAINLESS STEEL. NUTS, BOLTS, WASHERS AND ALL EMBEDDED ITEMS SHALL BE TYPE 316 STAINLESS STEEL. DISSIMILAR METAL ISOLATION STRIPS SHALL BE AROUND PIPES AT ALL HANGERS.

340 STANDARD PIPE SUPPORTS
NOT TO SCALE

This Record Drawing is a combination of the sealed engineering contract drawings for this project, modified by information furnished by the contractor reflecting changes in the Project made during construction. The original sealed drawings are on file at the offices of FREESE AND NICHOLS, INC.
RECORD DRAWINGS PREPARED ON: 06/24/20

Freese and Nichols, Inc.
Texas Registered Engineering Firm F-2144

THE SEAL HAS ORIGINALLY APPEARED ON THIS DOCUMENT WAS AUTHORIZED BY [illegible] P.E. ON [illegible]. IT MAY NOT BE ALTERED TO AN ELECTRONIC DOCUMENT WITHOUT PROPER AUTHORIZATION. IF THIS DOCUMENT IS ALTERED, THE ENGINEER SHALL NOT BE RESPONSIBLE FOR ANY ALTERATIONS MADE TO THE DOCUMENT. IT IS A VIOLATION OF THE TEXAS ENGINEERING PRACTICE ACT TO ALTER THIS DOCUMENT IN ANY WAY.

FREESE NICHOLS
4040 Broadway Street, Suite 600
San Antonio, Texas 78209-6350
Phone: (210) 829-3800
Fax: (210) 829-3901
Web - www.freese.com

CITY OF CASTROVILLE
WWTP CAPACITY EXPANSION PROJECT
STANDARD DETAILS
STANDARD MECHANICAL DETAILS #4

NO.	ISSUE	BY	DATE
	RECORD DRAWINGS	CCG	06/24/20
2	RFI - 007	CCG	1/25/17
1	ISSUED FOR CONSTRUCTION	CCG	11/16/16

VERIFY SCALE Bar is one inch on original drawing. If not one inch on this sheet, adjust scale.
0 1"

FAN JOB NO.	CVL14259
DATE	6/10/16
DESIGNED	CCG
DRAWN	DDH
REVISED	
CHECKED	TWS
FILE NAME	mp-all-dt-typl03.dwg

SHEET SD-4
SEQ.

ACAD Rel: 21.0s (LMS Tech)
Filename: N:\WW\Drawings\mp-all-dt-typl03.dwg
Last Saved: 10/8/2019 5:15 PM Saved By: 03576

Plot Date: 6/18/2020 5:49 PM Plot By: 90119 Filename: N:\WW\Drawings\mp-all-dt-typl03.dwg

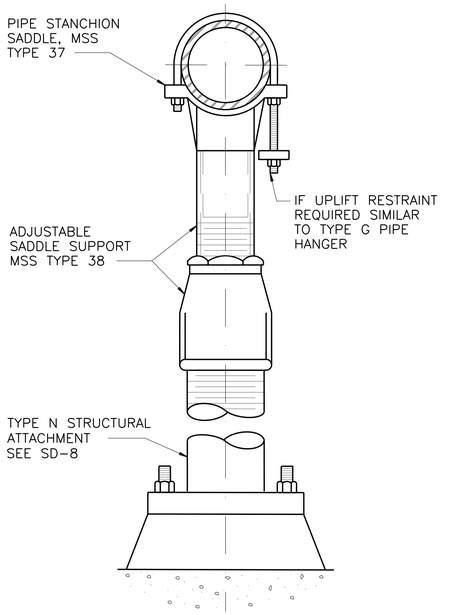

TYPE F PIPE SUPPORT
4" THROUGH 30" PIPE

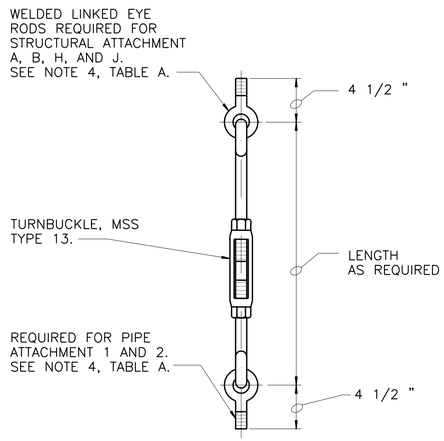

TYPICAL SUPPORT ROD FOR PIPES SUBJECT TO HORIZONTAL MOVEMENT

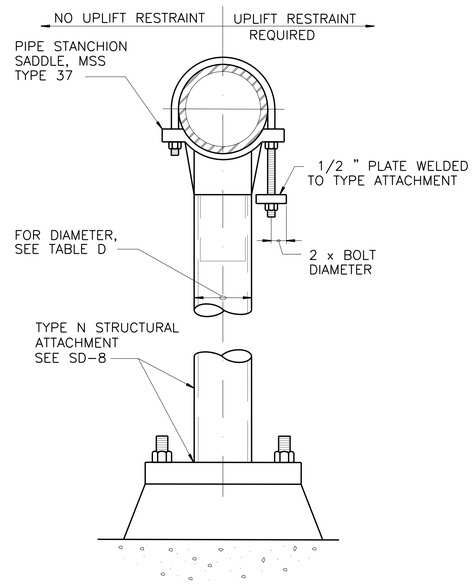

TYPE G PIPE SUPPORT
2" THROUGH 36" PIPE

TABLE C	
PIPE SIZE	STRAP SIZE
14" TO 16"	1/2 " x 6"
18" TO 20"	5/8 " x 6"
24" TO 30"	3/4 " x 6"

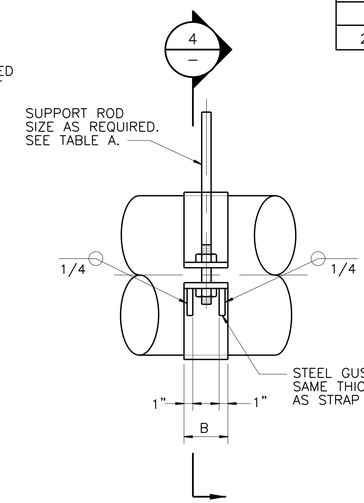

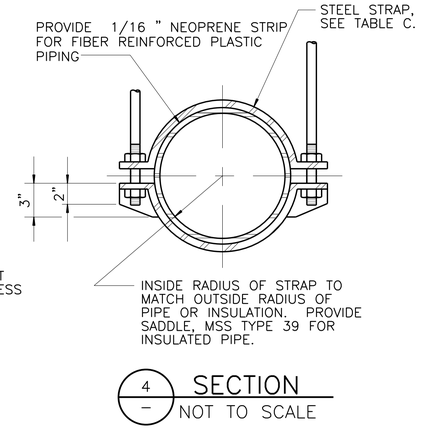

TYPE H PIPE HANGER
14" THROUGH 30" PIPE

TABLE A – PIPE SPAN AND SUPPORT ROD SIZE								
NOMINAL PIPE SIZE (INCHES)	SUPPORT ROD SIZE AND MAXIMUM LOAD PER ROD SEE NOTES				MAXIMUM PIPE SPAN (FEET)			
	ONE ROD SUPPORT SYSTEM		TWO ROD SUPPORT SYSTEM					
	ROD SIZE (INCHES)	MAX LOAD (POUNDS)	ROD SIZE (INCHES)	MAX LOAD (POUNDS)	STEEL	COPPER	PLASTIC SEE NOTE 3	DUCTILE IRON SEE NOTE 5
3/8" TO 3/4"	3/8 "	610	3/8 "	610	5	5	CONTINUOUS	12 FEET FOR PRESSURE PIPE 10 FEET FOR SOIL PIPE
1	3/8 "	610	3/8 "	610	5	5	5	
1 1/4	3/8 "	610	3/8 "	610	5	5	5	
1 1/2	3/8 "	610	3/8 "	610	5	5	5	
2	3/8 "	610	3/8 "	610	10	5	5	
2 1/2	1/2 "	1130	3/8 "	610	10	10	5	
3	1/2 "	1130	3/8 "	610	10	20	5	
4	5/8 "	1810	3/8 "	610	10	20	5	
6	3/4 "	2710	1/2 "	1130	15	20	5	
8	7/8 "	3770	5/8 "	1810	15	20	5	
10	1"	4960	3/4 "	2710	20	—	5	
12	1 1/4 "	8000	7/8 "	3770	20	—	10	
14	1 1/4 "	8000	1"	4960	20	—	—	
16	1 1/4 "	8000	1"	4960	25	—	—	
18	1 1/4 "	8000	1"	4960	25	—	—	
20	1 1/2 "	11630	1 1/4 "	8000	25	—	—	
24	1 1/2 "	11630	1 1/2 "	11630	30	—	—	
30	1 1/2 "	11630	1 1/2 "	11630	30	—	—	

NOTES:

1. DESIGN WEIGHT SHALL BE THE WEIGHT OF THE PIPE FULL OF WATER. HANGER SYSTEMS SHALL BE DESIGNED FOR A FACTOR OF SAFETY OF 5 OR GREATER.
2. ROD SIZES SHOWN ARE FOR THE SUPPORT OF A SINGLE PIPE. WHEN SUPPORTING MORE THAN ONE PIPE, ROD SHALL BE SIZED USING THE DESIGNED WEIGHTS (SEE NOTE 1) TO DETERMINE THE TOTAL DESIGN LOAD. THE TOTAL DESIGN LOAD SHALL NOT EXCEED THE MAXIMUM LOADS SHOWN IN TABLE A.
3. SPAN SHOWN IS FOR SCHEDULE 80 PVC PIPE AT 100°F. SPANS FOR OTHER PLASTICS, OTHER PVC PIPE SCHEDULES AND PIPES AT HIGHER TEMPERATURES SHALL BE SHORTENED IN ACCORDANCE WITH THE PIPE MANUFACTURER'S RECOMMENDATIONS. "CONTINUOUS" MEANS PIPE SHALL BE IN UNISTRUT POWER-STRUT OR SIMILAR CHANNEL.
4. FOR PIPES SUBJECT TO LONGITUDINAL MOVEMENT, OR HAVING SERVICE TEMPERATURES IN RANGES OF 33°F TO 59°F OR 120°F TO 450°F, SEE TYPICAL SUPPORT ROD FOR PIPES SUBJECT TO HORIZONTAL MOVEMENT, THIS DRAWING.
5. PROVIDE A MINIMUM OF ONE PIPE HANGER PER PIPE LENGTH, WITHIN 4-INCHES OF THE BELL.
6. UNLESS OTHERWISE SPECIFIED, HANGERS AND SUPPORT SHALL BE 316 STAINLESS STEEL. NUTS, BOLTS, WASHERS AND ALL EMBEDDED ITEMS SHALL BE TYPE 304 OR 316 STAINLESS STEEL. DISSIMILAR METAL ISOLATION STRIPS SHALL BE AROUND PIPES AT ALL HANGERS.
7. ALL GRINNELL PRODUCTS ARE MANUFACTURED BY ANVIL INTERNATIONAL INC.
8. PIPE SUPPORTS SHALL BE SECURED WITH EPOXY ADHESIVE ANCHORS.

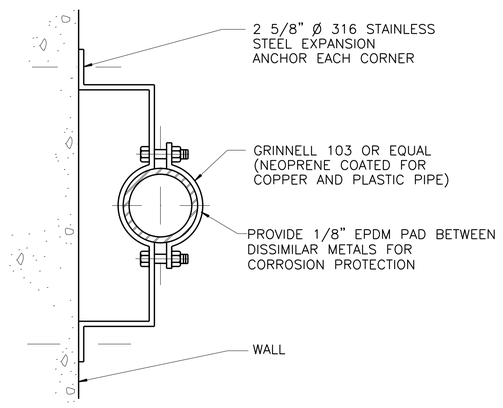

TYPE I PIPE HANGER
3/4 " THROUGH 8" PIPE

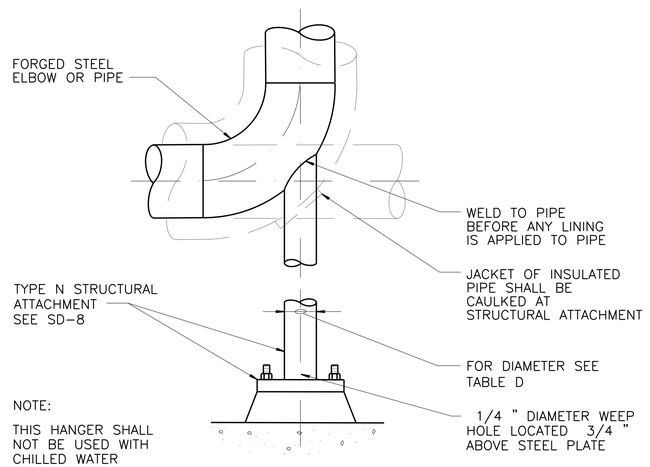

TYPE J PIPE SUPPORT
2 1/2 " THROUGH 12" PIPE

340 STANDARD PIPE SUPPORTS
NOT TO SCALE

This Record Drawing is a combination of the sealed engineering contract drawings for this project, modified by information furnished by the contractor reflecting changes in the Project made during construction. The original sealed drawings are on file at the offices of
FREESE AND NICHOLS, INC.
RECORD DRAWINGS PREPARED ON:
06/24/20

Freese and Nichols, Inc.
Texas Registered Engineering Firm F-2144

THE SEAL (NA) ORIGINALLY APPEARED ON THIS DOCUMENT WAS AUTHORIZED BY CHRIS C. GEE, P.E.
PURSUANT TO SECTION 1001.407 OF THE TEXAS ADMINISTRATIVE CODE, ALTERATION OF A SEALED DOCUMENT WITHOUT PROPER AUTHORIZATION AND/OR THE UNAUTHORIZED REMOVAL OF AN ENGINEER'S SEAL FROM AN ENGINEERING DOCUMENT IS A CRIMINAL OFFENSE UNDER THE TEXAS ENGINEERING PRACTICE ACT

FREESE NICHOLS
4040 Broadway Street, Suite 600
San Antonio, Texas 78209-6350
Phone (210) 829-3800
Fax (210) 829-3901
Web - www.freese.com

CITY OF CASTROVILLE
WWTP CAPACITY EXPANSION PROJECT
STANDARD DETAILS
STANDARD MECHANICAL DETAILS #5

FAN JOB NO.	CVL14259			
DATE	6/10/16			
DESIGNED	CCG			
DRAWN	DDH	CCG	06/24/20	RECORD DRAWINGS
REVISED		CCG	11/16/16	ISSUED FOR CONSTRUCTION
CHECKED	TWS			VERIFY SCALE Bar is one inch on original drawing. If not one inch on this sheet, adjust scale.
FILE NAME	mp-all-dt-typl04.dwg			

SHEET SD-5
SEQ.

ACAD Rel: 21.0s (LMS Tech)
Filename: N:\WW\Drawings\mp-all-dt-typl04.dwg
Last Saved: 10/8/2019 5:06 PM Saved By: 03576

Plot Date: 6/18/2020 5:49 PM Plot By: 90119 Filename: N:\WW\Drawings\mp-all-dt-typl04.dwg

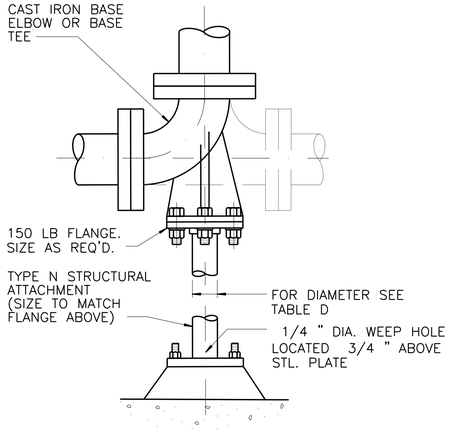

TYPE K PIPE HANGER

2 1/2 " THROUGH 12" PIPE

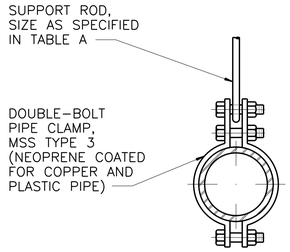

TYPE L PIPE HANGER

3/4" THROUGH 30" PIPE

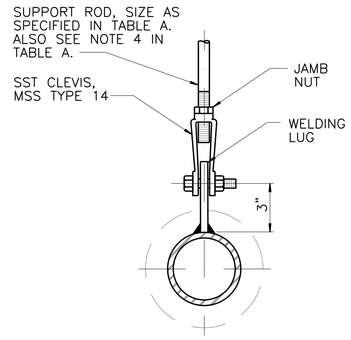

TYPE M PIPE HANGER

2 1/2 " THROUGH 12" PIPE

NOTES:

1. LUG SHALL BE WELDED TO PIPE BEFORE LINING IS APPLIED TO PIPE
2. JACKET OF INSULATED PIPE SHALL BE CAULKED AT WELDING LUG.
3. THIS HANGER SHALL NOT BE USED WITH CHILLED WATER SUP-PLY OR RETURN PIPING.

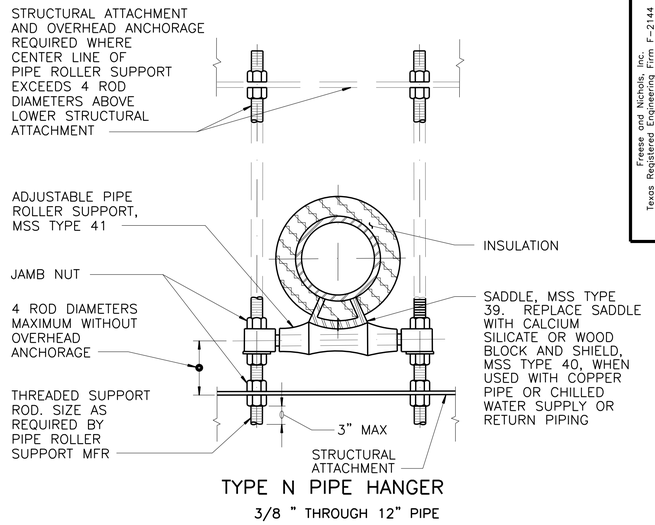

TYPE N PIPE HANGER

3/8 " THROUGH 12" PIPE

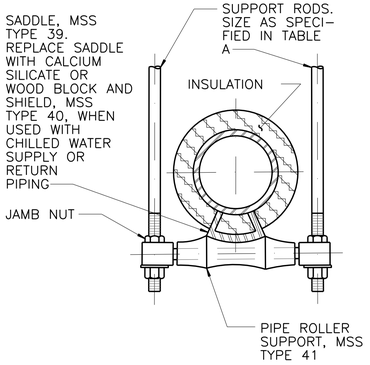

TYPE O PIPE HANGER

10" THROUGH 12" PIPE

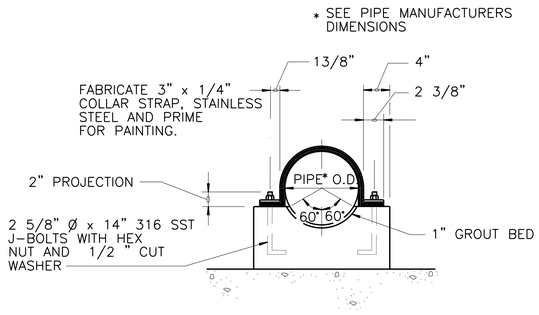

TYPE P PIPE HANGER

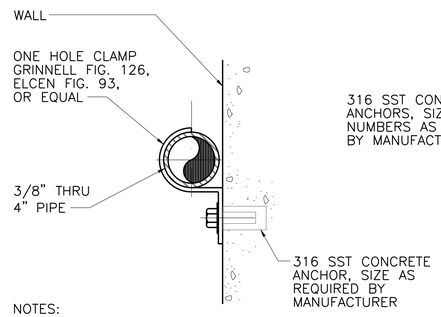

NOTES:

1. SPACE SUPPORTS TO SUIT LOAD.
2. ON STEEL COLUMNS SECURE SUPPORTS WITH NUTS AND BOLTS AS REQUIRED.

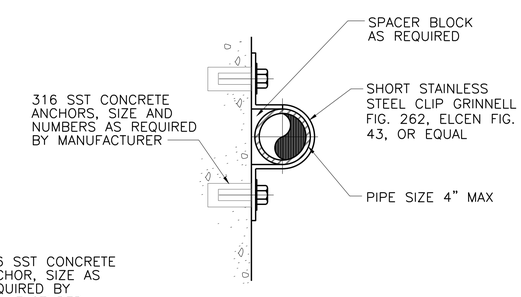

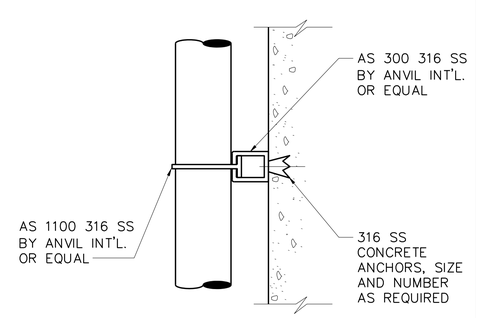

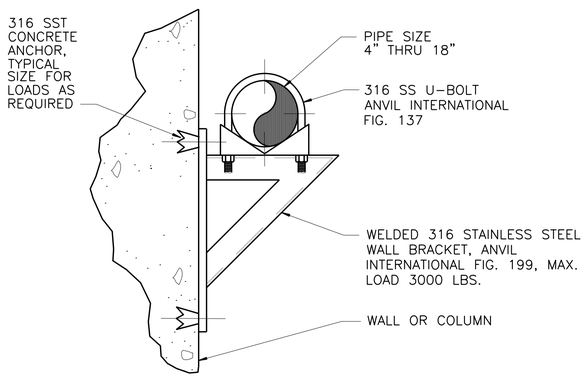

TYPE S PIPE SUPPORT - MEDIUM

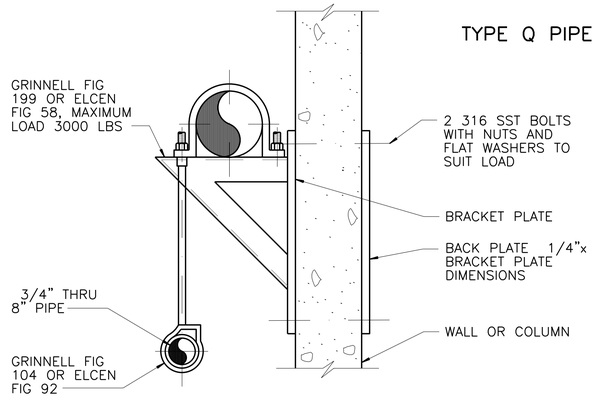

TYPE T PIPE SUPPORT

NOTE:
USE NEOPRENE SLEEVE ON COPPER AND PVC PIPING AT STRAPS AND BRACKETS.

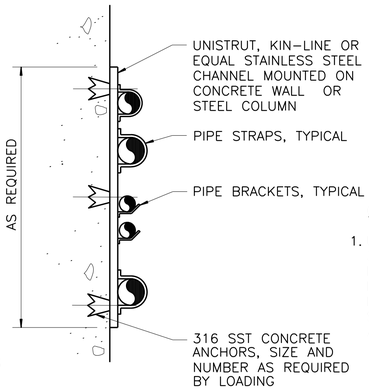

TYPE U STACKED PIPE WALL SYSTEM

TYPE Q PIPE SUPPORT

TYPE R PIPE SUPPORT

TYPE V PIPE SUPPORT

GENERAL NOTES: (APPLIES TO ALL 340 STANDARD PIPE SUPPORTS):

1. UNLESS OTHERWISE SPECIFIED, HANGERS AND SUPPORT SHALL BE 304 OR 316 STAINLESS STEEL. NUTS, BOLTS, WASHERS AND ALL EMBEDDED ITEMS SHALL BE TYPE 304 OR 316 STAINLESS STEEL. ALL NEW UNISTRUT ANCHORS, SUPPORT SYSTEMS AND FASTENING HARDWARE IN THE CHLORINE CONTACT BASIN SHALL BE 316 STAINLESS STELL ONLY. DISSIMILAR METAL ISOLATION STRIPS SHALL BE AROUND PIPES AT ALL HANGERS.

340 STANDARD PIPE SUPPORTS

NOT TO SCALE

This Record Drawing is a combination of the sealed engineering contract drawings for this project, modified by information furnished by the contractor reflecting changes in the Project made during construction. The original sealed drawings are on file at the offices of
FREESE AND NICHOLS, INC.
RECORD DRAWINGS PREPARED ON:
06/24/20

Freese and Nichols, Inc.
Texas Registered Engineering Firm F-2144

THE SEAL HAS ORIGINALLY APPEARED ON THIS DOCUMENT WAS AUTHORIZED BY CHRIS C. GEE P.E.
ALTERATION OF A SEALED DOCUMENT WITHOUT PROPER AUTHORITY AND ADDITIONAL SEAL IS A VIOLATION OF THE TEXAS ENGINEERING PRACTICE ACT
OFFENSE UNDER THE TEXAS ENGINEERING PRACTICE ACT

FREESE NICHOLS
4040 Broadway, Street, Suite 600
San Antonio, Texas 78209-6350
Phone: (210) 824-3000
Fax: (210) 826-8901
Web - www.freese.com

CITY OF CASTROVILLE

WWTP CAPACITY EXPANSION PROJECT

STANDARD DETAILS

STANDARD MECHANICAL DETAILS #6

F&N JOB NO. CVL14259
DATE 6/10/16
DESIGNED CCG
DRAWN DDH
CHECKED TWS
FILE NAME mp-all-dt-typl05.dwg

NO.	ISSUE	BY	DATE
	RECORD DRAWINGS	CCG	06/24/20
1	ISSUED FOR CONSTRUCTION	CCG	11/16/16

VERIFY SCALE Bar is one inch on original drawing. If not one inch on this sheet, adjust scale.
0 1"

SHEET SD-6

SEQ.

ACAD Rel: 21.0s (LMS Tech)
Filename: N:\WW\Drawings\mp-all-dt-typl05.dwg
Last Saved: 10/8/2019 5:06 PM Saved By: 03576

Plot Date: 6/18/2020 5:49 PM Plot By: 90119 Filename: N:\WW\Drawings\mp-all-dt-typl05.dwg

GENERAL NOTES: (APPLIES TO ALL 341 TYPE ATTACHMENTS):

1. WHERE NO REFERENCE TO PIPE SUPPORT SYSTEMS IS GIVEN ON THE DRAWINGS, THE CONTRACTOR SHALL USE AN APPROPRIATE SYSTEM. SEE TABLE B, PIPE AND CONDUIT SUPPORT SYSTEMS SHALL BE UNISTRUT, POWER STRUT, SUPER STRUT OR APPROVED EQUAL, AND SHALL BE DESIGNED BY THE CONTRACTOR TO MEET THE MINIMUM LOAD AND SPAN REQUIREMENTS SPECIFIED.
2. UNLESS OTHERWISE SPECIFIED, HANGERS AND SUPPORTS SHALL BE 304 OR 316 STAINLESS STEEL. NUT, BOLTS, WASHERS AND ALL EMBEDDED ITEMS SHALL BE TYPE 304 OR 316 STAINLESS STEEL. ALL NEW UNISTRUT ANCHORS, SUPPORT SYSTEMS AND FASTENING HARDWARE IN THE CHLORINE CONTACT BASIN SHALL BE 316 STAINLESS STEEL ONLY. DISSIMILAR METAL ISOLATION STRIPS SHALL BE REQUIRED AROUND PIPES AT ALL HANGERS.
3. UNLESS OTHERWISE SPECIFIED, EXPANSION ANCHORS SHALL NOT BE USED.
4. MSS REFERS TO THE MANUFACTURERS STANDARDIZATION SOCIETY OF THE VALVE AND FITTINGS INDUSTRY, STANDARD PRACTICE SP58 AND SP69
5. HANGER BRACKETS AND SUPPORT COMPONENTS MAY BE INTERCHANGED.
6. CONCRETE INSERTS IN AREAS BELOW WATER SURFACE OR NORMALLY SUBJECT TO SUBMERGING SHALL BE EMBEDDED ANCHOR BOLTS OR EQUAL.
7. PROVIDE PLASTIC OR RUBBER CHANNEL END CAPS AT EXPOSED ENDS OF CHANNELS 7'-0" ABOVE FLOOR AND BELOW.
8. MAXIMUM DESIGN WEIGHTS AND LOADS SHALL BE AS SHOWN IN TABLE A, OR AS SHOWN IN THE DETAILS ON THISSHEET.
9. WHEN SUPPORTING PIPING REQUIRES HORIZONTAL FLEXIBILITY NORMAL TO A STEEL BEAMS AXIS, USE STRUCTURAL ATTACHMENTS C AND D. TYPE F SHALL BE USED FOR PARALLEL FLEXIBILITY.
10. ALL PIPING SUPPORTED BY HANGERS AND/OR STRUCTURAL ATTACHMENTS SHALL BE BRACED AGAINST HORIZONTAL, VERTICAL, AXIAL, AND LONGITUDINAL SWAY. BRACING'S SHALL BE CALCULATED TO RESIST ZONE 1 SEISMIC LOADINGS AS SPECIFIED BY SMACNA
11. AND AS INDICATED IN THE SPECIFICATIONS.
12. FITTINGS SHALL NOT BE LESS THAN MSS CL B.
13. UNLESS OTHERWISE SPECIFIED, TRAPEZE AND PIPE RACK COMPONENTS SHALL HAVE A MINIMUM STEEL THICKNESS OF 12 GAGE WITH A MAXIMUM DEFLECTION 1/240 OF THE SPAN.
14. MINIMUM CHANNEL COMPONENT SIZE SHALL BE 1 5/8" SQUARE AS MANUFACTURED BY SUPER STRUT, UNISTRUT, POWER-STRUT, OR APPROVED EQUAL.
15. FOR STRUCTURE ATTACHMENTS, SEE DETAIL 341.
16. NOT ALL PIPE HANGERS/STRUCTURAL SUPPORTS MAY BE USED IN THESE PLANS.
17. ALL GRINNELL PRODUCTS ARE MANUFACTURED BY ANVIL INTERNATIONAL INC.
18. SECTIONS OF HOT AND CHILLED PIPING BETWEEN ANCHORS SHALL BE PROVIDED WITH PIPE GUIDES.
19. THE FIRST AND SECOND PIPE GUIDES FROM EXPANSION JOINTS SHALL BE LOCATED AT A MAXIMUM OF FOUR AND EIGHTEEN PIPE DIAMETERS RESPECTIVELY FROM THE FREE END OF THE EXPANSION JOINT. INTERMEDIATE PIPE GUIDES SHALL BE LOCATED AS RECOMMENDED BY THE EXPANSION JOINT MANUFACTURER. TYPE G1 OR G2 PIPE GUIDES SHALL BE THE FIRST GUIDE FROM ANY EXPANSION JOINT.
20. FOR "L","Z" AND "U" CONFIGURATION OF PIPING BETWEEN ANCHORS, PIPE GUIDES SHALL BE PROVIDED.
21. FOR LONG RUNS OF PIPE REQUIRING PIPE GUIDES (GREATER THAN 4 GUIDES), EVERY THIRD, PIPE GUIDE SHALL BE A TYPE G1 OR G2 AS APPLICABLE.
22. ALL THE HARDWARE AND COMPONENTS FOR STRUCTURAL ATTACHMENTS SHALL BE MADE OF 316 STAINLESS STEEL MATERIAL.
23. ALL GRINNELL PRDDUCTS ARE MANUFACTURED BY ANVIL INTERNATIONAL INC.

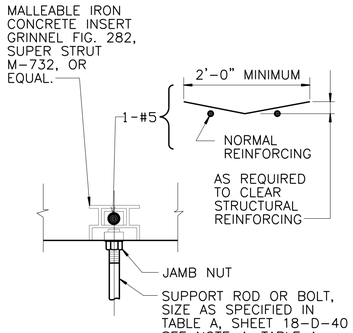

CAPACITY: 3/8 " THROUGH 6" PIPE

MAXIMUM ALLOWABLE LOAD:

ROD SIZE	LOAD
3/8 "	610 LBS
1/2 "	1130 LBS
5/8 " - 7/8 "	1140LBS

SPACING SHALL BE AS REQUIRED BUT SHALL NOT EXCEED THOSE SPANS SHOWN IN TABLE A.

TYPE A
STRUCTURAL ATTACHMENT

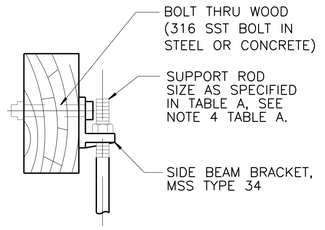

CAPACITY: WOOD 3/8 " THROUGH 4" PIPE (THROUGH 6" PIPE USING PIPE HANGER TYPE 5 OR 8)

STEEL OR CONCRETE 3/8 " THROUGH 12" PIPE.

MAXIMUM ALLOWABLE LOAD:

ROD SIZE	LOAD WOOD	LOAD CONCRETE/STEEL
3/8 "	390 LBS	610 LBS
1/2 "	640 LBS	1130 LBS
5/8 "	760 LBS	1810 LBS
3/4 "	830 LBS	2710 LBS
7/8 "	830 LBS	3770 LBS

SPACING SHALL BE AS REQUIRED, BUT SHALL NOT EXCEED SPANS SHOWN IN TABLE A.

TYPE B
STRUCTURAL ATTACHMENT

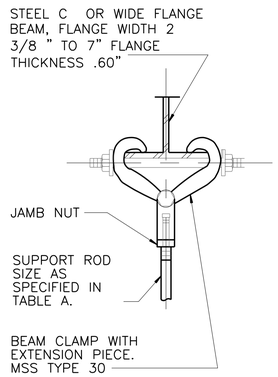

CAPACITY: 3/8 " THROUGH 6" PIPE
MAXIMUM ALLOWABLE LOAD:

ROD SIZE	WOOD LOAD	CONC. /STEEL LOAD
3/8 "	390 LBS	610 LBS
1/2 "	640 LBS	1130 LBS
5/8 "	760 LBS	1810 LBS
3/4 "	830 LBS	2710 LBS
7/8 "	830 LBS	3770 LBS

SPACING SHALL BE AS REQUIRED, BUT SHALL NOT EXCEED THOSE SPANS SHOWN IN TABLE A.

TYPE C
STRUCTURAL ATTACHMENT

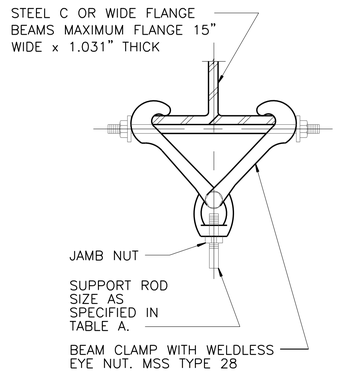

CAPACITY: 3/8" THROUGH 12" PIPE
MAXIMUM ALLOWABLE LOAD:

ROD SIZE	LOAD
3/8 "	610 LBS
1/2 "	1130 LBS
5/8 "	1810 LBS
3/4 "	2710 LBS
7/8 "	3770 LBS
1"	4960 LBS
1 1/4 "	8000 LBS

SPACING SHALL BE AS REQUIRED, BUT SHALL NOT EXCEED THOSE SPANS SHOWN IN TABLE A.

TYPE D
STRUCTURAL ATTACHMENT

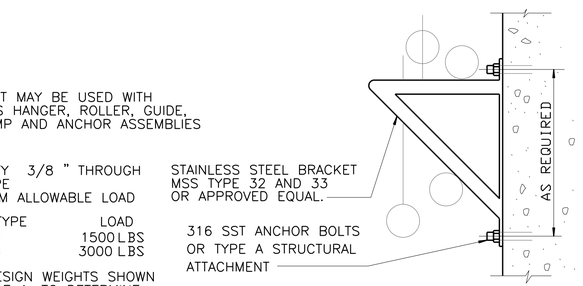

TYPE E STRUCTURAL ATTACHMENT

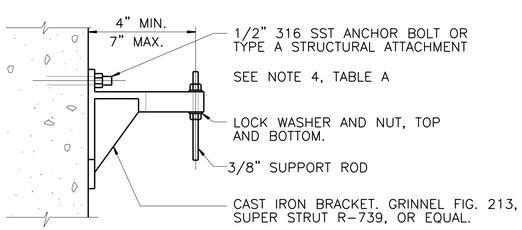

CAPACITY 3/8" THROUGH 2" PIPE
MAXIMUM ALLOWABLE LOAD 180 LBS
SPACING SHALL BE AS REQUIRED, BUT SHALL NOT EXCEED THOSE SPANS SHOWN IN TABLE A.

TYPE F
STRUCTURAL ATTACHMENT

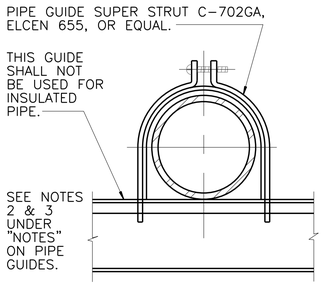

TYPE G1 PIPE GUIDE
1/2 " THROUGH 12" PIPE

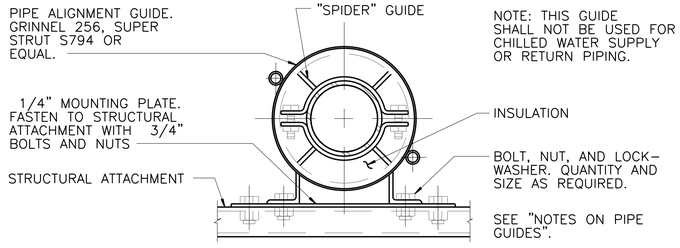

TYPE G2 PIPE GUIDE
3/4" THROUGH 12" PIPE

341 STANDARD STRUCTURAL ATTACHMENTS
NOT TO SCALE

This Record Drawing is a combination of the sealed engineering contract drawings for this project, modified by information furnished by the contractor reflecting changes in the Project made during construction. The original sealed drawings are on file at the offices of
FREESE AND NICHOLS, INC.
RECORD DRAWINGS PREPARED ON:
06/24/20

Freese and Nichols, Inc.
Texas Registered Engineering Firm F-2144

THE SEAL (W/ DATE) APPEARING ON THIS DOCUMENT WAS AUTHORIZED BY KORY C. GEE, P.E. ____
ALTERATION OF A SEALED DOCUMENT WITHOUT PROPER AUTHORITY IS PROHIBITED BY THE TEXAS ENGINEERING PRACTICE ACT. IT IS A VIOLATION TO MODIFY THIS DOCUMENT IN ANY WAY. ANY MODIFICATIONS ARE DONE AT THE SOLE RISK AND LIABILITY OF THE PERSON OR ENTITY DOING SO. ANY ENTITY OTHER THAN THE ENGINEER OF RECORD WHO ALTERS THIS DOCUMENT IS SUBJECT TO ENFORCEMENT ACTION AND/OR PENALTIES FOR OFFENSE UNDER THE TEXAS ENGINEERING PRACTICE ACT.

FREESE NICHOLS
4040 Broadway Street, Suite 600
San Antonio, Texas 78209-6350
Phone - (210) 538-5300
Fax - (210) 826-9401
Web - www.freese.com

CITY OF CASTROVILLE
WWTP CAPACITY EXPANSION PROJECT
STANDARD DETAILS
STANDARD MECHANICAL DETAILS #7

NO.	ISSUE	BY	DATE
	RECORD DRAWINGS	CCG	06/24/20
1	ISSUED FOR CONSTRUCTION	CCG	11/16/16

F&N JOB NO. CVL14259
DATE 6/10/16
DESIGNED CCG
DRAWN DDH
CHECKED TWS
FILE NAME mp-all-dt-typl06.dwg

VERIFY SCALE Bar is one inch on original drawing. If not one inch on this sheet, adjust scale.
0 1"

SHEET SD-7
SEQ.

ACAD Rel: 21.0s (LMS Tech)
Filename: N:\WW\Drawings\mp-all-dt-typl06.dwg
Last Saved: 10/8/2019 5:08 PM Saved By: 03576

Plot Date: 6/18/2020 5:49 PM Plot By: 90119 Filename: N:\WW\Drawings\mp-all-dt-typl06.dwg

TABLE B – HANGER VS. TEMPERATURE AND MATERIALS												
X INDICATES PIPE HANGERS SUITABLE FOR CONDITIONS LISTED BELOW.	PIPE HANGER TYPE											
	A	B	M	C	O	D	E	N	J	K	G	L
SERVICE TEMPERATURE												
33°F–58°F OR 120°F–450°F — INSULATED			X	X	X			X	X		X	X
120°F–450°F — UNINSULATED	X	X	X	X	X	X	X	X	X	X	X	X
60°F – 119°F	X	X	X			X	X		X	X	X	X
PIPING MATERIALS												
STEEL	X	X	X	X	X	X	X	X	X		X	X
COPPER		X		X		X	X	X				
PLASTIC	X	X		X	X	X	X	X			X	X
CAST IRON	X	X		X	X	X	X	X		X	X	X

NOTE: FOR SERVICES OTHER THAN THOSE SHOWN IN TABLE B, PIPE ATTACHMENTS SHALL BE THOSE SPECIFIED IN THE PIPE SPEC.

TABLE D–PIPE STANCHION DIAMETER (STD. WT.)			
PIPE, ELBOW, OR TEE SIZE (INCHES)	NOMINAL PIPE STANCHION DIA. (INCHES)	PIPE, ELBOW, OR TEE SIZE (INCHES)	NOMINAL PIPE STANCHION DIA. (INCHES)
2	1 1/2	12	10
2 1/2	2	14	12
3	2 1/2	16	12
4	3	18	16
6	4	20	16
8	6	24	20
10	8	30	24

NOTES ON PIPE GUIDES (APPLIES TO ALL 341 ATTACHMENTS):

1. SECTIONS OF HOT AND CHILLED PIPING BETWEEN ANCHORS SHALL BE PROVIDED WITH PIPE GUIDES.
2. THE FIRST AND SECOND PIPE GUIDES FROM EXPANSION JOINTS SHALL BE LOCATED AT A MAXIMUM OF FOUR AND EIGHTEEN PIPE DIAMETERS RESPECTIVELY FROM THE FREE END OF THE EXPANSION JOINT. INTERMEDIATE PIPE GUIDES SHALL BE LOCATED AS RECOMMENDED BY THE EXPANSION JOINT MANUFACTURER. TYPE G1 OR G2 PIPE GUIDES SHALL BE THE FIRST GUIDE FROM ANY EXPANSION JOINT.
3. FOR "L","Z" AND "U" CONFIGURATION OF PIPING BETWEEN ANCHORS, PIPE GUIDES SHALL BE PROVIDED.
4. FOR LONG RUNS OF PIPE REQUIRING PIPE GUIDES (GREATER THAN 4 GUIDES), EVERY THIRD, PIPE GUIDE SHALL BE A TYPE G1 OR G2 AS APPLICABLE.
5. ALL THE HARDWARE AND COMPONENTS FOR STRUCTURAL ATTACHMENTS SHALL BE MADE OF 316 STAINLESS STEEL MATERIAL.
6. ALL GRINNELL PRDDUCTS ARE MANUFACTURED BY ANVIL INTERNATIONAL INC.

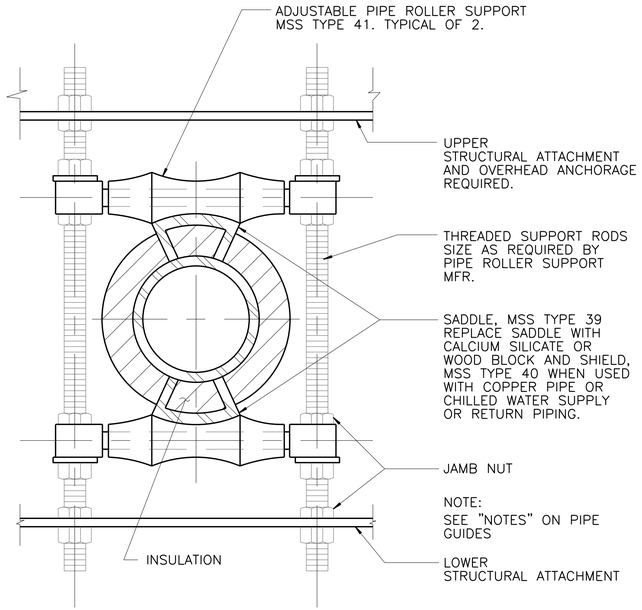

TYPE G3 PIPE GUIDE
3/8 " THROUGH 12" PIPE

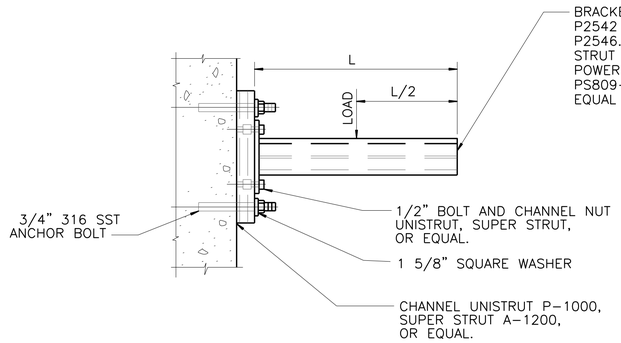

BRACKET MAY BE USED WITH VARIOUS HANGER, ROLLER, GUIDE AND CLAMP ASSEMBLIES.

CAPACITY AT MID–POINT

L	LOAD
12"	1000 LBS
18"	650 LBS
24"	500 LBS
30"	400 LBS
36"	350 LBS

SPACING SHALL BE AS REQUIRED, BUT SHALL NOT EXCEED THOSE SPANS SHOWN IN TABLE A.

TYPE K
STRUCTURAL ATTACHMENT

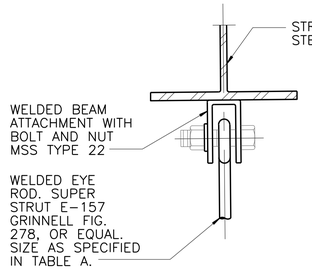

CAPACITY: 3/8 " THROUGH 12" PIPE
MAXIMUM ALLOWABLE LOAD.

ROD SIZE	LOAD
3/8"	610 LBS
1/2"	1130 LBS
5/8"	1810 LBS
3/4"	2710 LBS
7/8"	3770 LBS

SPACING SHALL BE AS REQUIRED. BUT SHALL NOT EXCEED THOSE SPANS SHOWN IN TABLE A.

TYPE H
STRUCTURAL ATTACHMENT

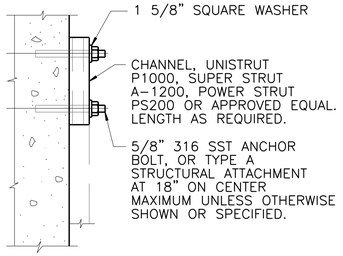

BRACKET MAY BE WALL OR CEILING MOUNTED, AND MAY BE USED WITH VARIOUS HANGER, GUIDE, RACK, OR ANCHOR AND SWAY BRACE ASSEMBLIES.

MAXIMUM LOAD CAPACITY SHALL BE AS RECOMMENDED BY THE CHANNEL MANUFACTURER WITH A FACTOR OF SAFETY OF 4 OR GREATER.

SPACING SHALL BE AS REQUIRED, BUT SHALL NOT EXCEED THOSE SPANS SHOWN IN TABLE A.

TYPE M
STRUCTURAL ATTACHMENT

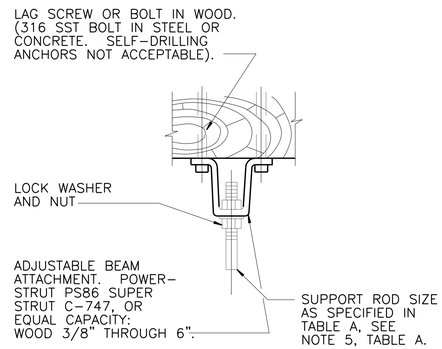

PIPE (THROUGH 10" PIPE USING PIPE HANGER TYPE 5 OR 8) STEEL OR CONCRETE, 3/8" THROUGH 12" PIPE.

MAXIMUM ALLOWABLE LOAD:

ROD SIZE	LOAD WOOD	LOAD CONCRETE/STEEL
3/8"	425 LBS	610 LBS
1/2"	715 LBS	1130 LBS
5/8"	810 LBS	1810 LBS
3/4"	1500 LBS	2710 LBS
7/8"	1650 LBS	3770 LBS

TYPE J
STRUCTURAL ATTACHMENT

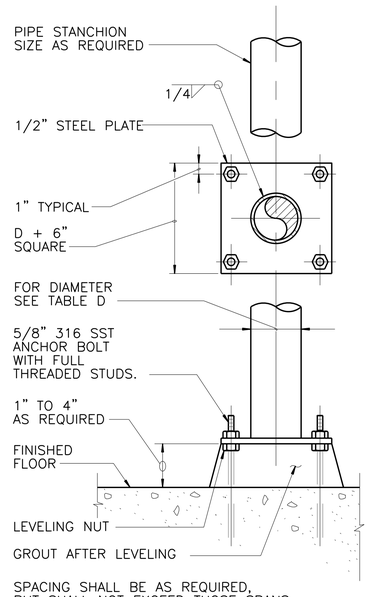

SPACING SHALL BE AS REQUIRED, BUT SHALL NOT EXCEED THOSE SPANS SHOWN IN TABLE A.

TYPE N
STRUCTURAL ATTACHMENT

341 STANDARD STRUCTURAL ATTACHMENTS
NOT TO SCALE

This Record Drawing is a combination of the sealed engineering contract drawings for this project, modified by information furnished by the contractor reflecting changes in the Project made during construction. The original sealed drawings are on file at the offices of
FREESE AND NICHOLS, INC.
RECORD DRAWINGS PREPARED ON: 06/24/20

Freese and Nichols, Inc.
Texas Registered Engineering Firm F–2144

THE SEAL (NA) ORIGINALLY APPEARED ON THIS DOCUMENT WAS AUTHORIZED BY (NAME) _____ DATE _____ ALTERATION OF A SEALED DOCUMENT WITHOUT PROPER AUTHORIZATION AND ADDITION OF A FALSE SEAL TO AN ALTERED DOCUMENT IS AN OFFENSE UNDER THE TEXAS ENGINEERING PRACTICE ACT

FREESE NICHOLS
4040 Broadway Street, Suite 600
San Antonio, Texas 78209–6350
Phone: (210) 829–3800
Fax: (210) 829–3901
Web – www.freese.com

CITY OF CASTROVILLE
WWTP CAPACITY EXPANSION PROJECT
STANDARD DETAILS
STANDARD MECHANICAL DETAILS #8

FAN JOB NO.	CVL14259			
DATE	6/10/16			
DESIGNED	CCG			
DRAWN	DDH	CCG	CCG	
REVISED	06/24/20	11/16/16		
CHECKED	TWS			
FILE NAME	mp–all–dt–typl07.dwg			

NO.	ISSUE	BY	DATE
	RECORD DRAWINGS	CCG	06/24/20
	ISSUED FOR CONSTRUCTION	CCG	11/16/16

VERIFY SCALE Bar is one inch on original drawing. If not one inch on this sheet, adjust scale.
0" 1"

SHEET SD–8
SEQ.

ACAD Rel: 21.0s (LMS Tech)
Filename: N:\WW\Drawings\mp–all–dt–typl07.dwg
Last Saved: 10/8/2019 5:15 PM Saved By: 03576

Plot Date: 6/18/2020 5:50 PM Plot By: 90119 Filename: N:\WW\Drawings\mp–all–dt–typl07.dwg

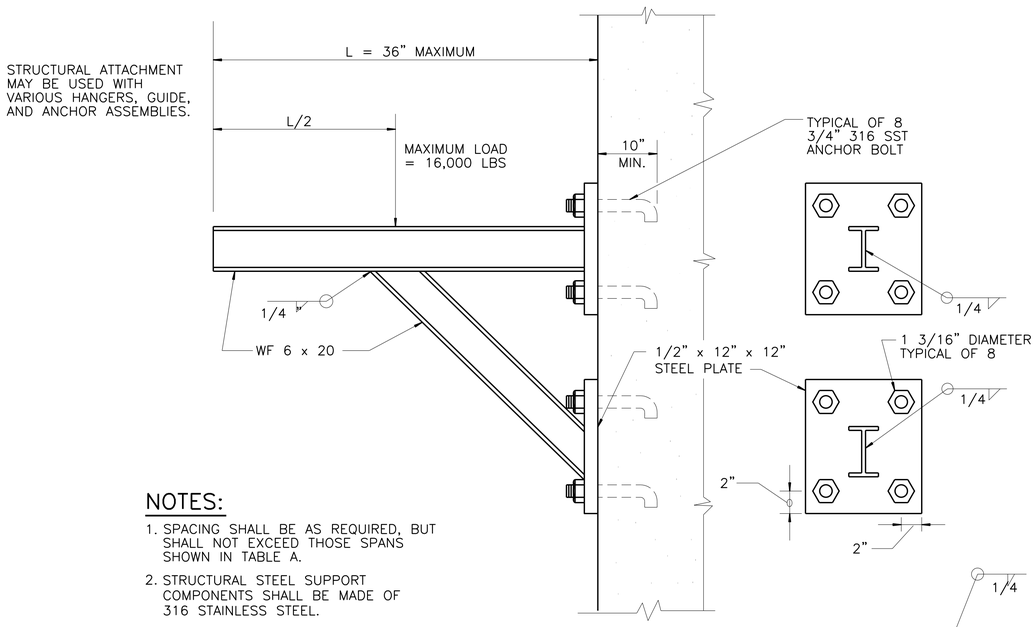

NOTES:

1. SPACING SHALL BE AS REQUIRED, BUT SHALL NOT EXCEED THOSE SPANS SHOWN IN TABLE A.
2. STRUCTURAL STEEL SUPPORT COMPONENTS SHALL BE MADE OF 316 STAINLESS STEEL.

TYPE P
STRUCTURAL ATTACHMENT

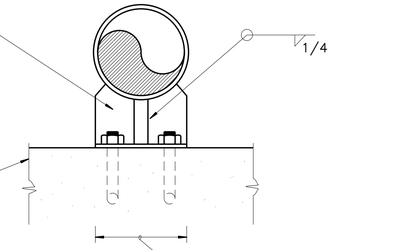

5/– SECTION
NOT TO SCALE

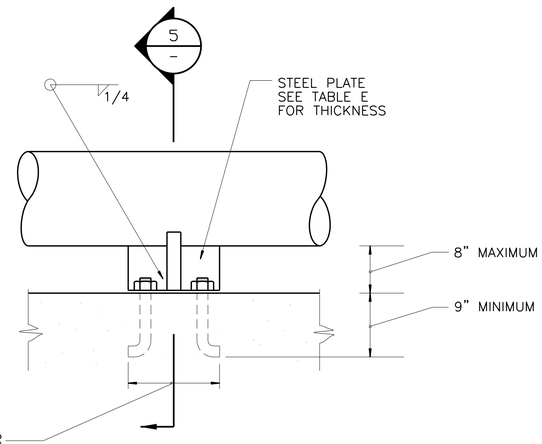

TABLE E		
PIPE SIZE (INCHES)	BOLT SIZE (INCHES)	PLATE THICKNESS (INCHES)
2–2 1/2	3/8	1/4
3–6	1/2	3/8
8–12	5/8	3/8
14–16	3/4	1/2
18–20	7/8	5/8
24–30	1	3/4

MAXIMUM ALLOWABLE LOAD

PLATE THICKNESS	ROD SIZE	BOLT SIZE	LOAD
3/4 "	1"	3/4 "	4960 LBS
1"	1 1/4 "	7/8 "	8000 LBS
1"	1 1/2 "	1"	1 1630 LBS

ATTACH ROD TO STRUCTURAL ATTACHMENT WITH FORGED STEEL CLEVIS, ITT GRINNEL FIG 299 OR EQUAL.

TYPE S
STRUCTURAL ATTACHMENT

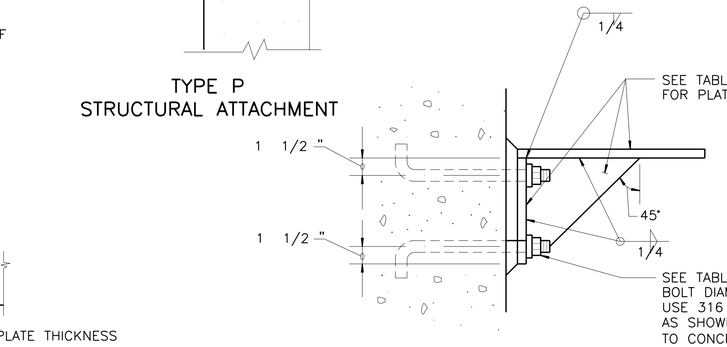

6/– SECTION
NOT TO SCALE

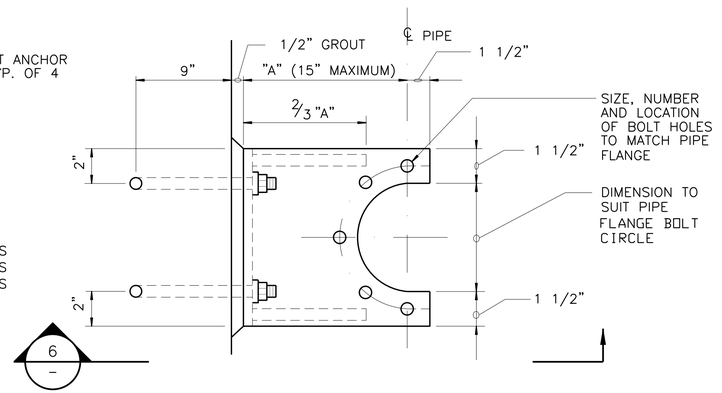

TYPE T
STRUCTURAL ATTACHMENT

341 STANDARD STRUCTURAL ATTACHMENTS
NOT TO SCALE

TYPE Q
STRUCTURAL ATTACHMENT

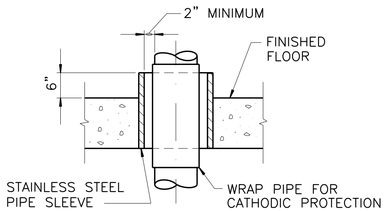

TYPE A FOR FLOORS

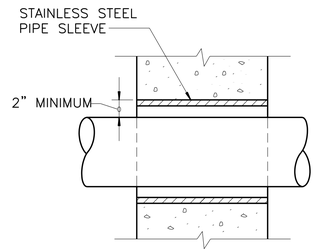

TYPE B FOR WALLS

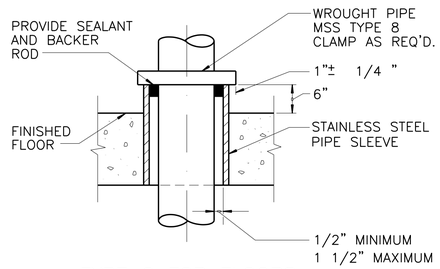

TYPE C FOR FLOORS AND CEILINGS

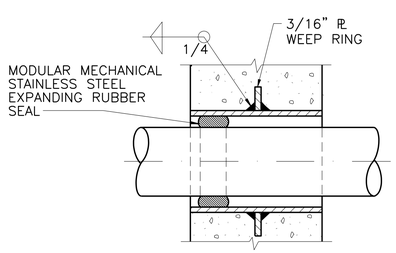

TYPE D FOR WALLS

342 STANDARD PIPE PENETRATIONS
NOT TO SCALE

This Record Drawing is a combination of the sealed engineering contract drawings for this project, modified by information furnished by the contractor reflecting changes in the Project made during construction. The original sealed drawings are on file at the offices of
FREESE AND NICHOLS, INC.
RECORD DRAWINGS PREPARED ON:
06/24/20

Freese and Nichols, Inc.
Texas Registered Engineering Firm F-2144

THE SEAL HAS ORIGINALLY APPEARED ON THIS DOCUMENT WAS AUTHORIZED BY [illegible] P.E. ON [illegible]. IT IS A VIOLATION OF THE TEXAS ENGINEERING PRACTICE ACT FOR ANY PERSON TO ALTER A SEALED DOCUMENT WITHOUT PROPER AUTHORIZATION. ANY ALTERATION OF A SEALED DOCUMENT IS A MISDEMEANOR OFFENSE UNDER THE TEXAS ENGINEERING PRACTICE ACT.

FREESE NICHOLS
4040 Broadway Street, Suite 600
San Antonio, Texas 78209-6350
Phone (210) 829-3500
Fax (210) 841-7401
Web – www.freese.com

CITY OF CASTROVILLE
WWTP CAPACITY EXPANSION PROJECT
STANDARD DETAILS
STANDARD MECHANICAL DETAILS #9

F&N JOB NO.	CVL14259				
DATE	6/10/16				
DESIGNED	CCG				
DRAWN	DDH	CCG	06/24/20	RECORD DRAWINGS	
REVISED		CCG	11/16/16	ISSUED FOR CONSTRUCTION	
CHECKED	TWS				
FILE NAME	mp-all-dt-typ08.dwg				

VERIFY SCALE Bar is one inch on original drawing. If not one inch on this sheet, adjust scale.
0" 1"

SHEET SD-9
SEQ.

ACAD Rel: 21.0s (LMS Tech)
Filename: N:\WW\Drawings\mp-all-dt-typ08.dwg
Last Saved: 10/9/2019 10:16 AM Saved By: 03576

Plot Date: 6/18/2020 5:50 PM Plot By: 90119 Filename: N:\WW\Drawings\mp-all-dt-typ08.dwg

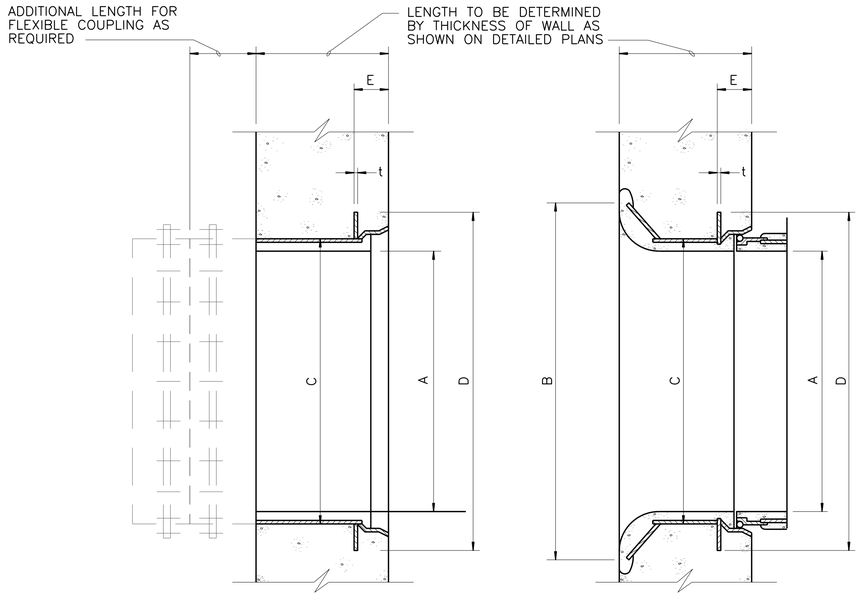

TYPE N WALL AND BELLMOUTH FITTINGS

PIPE SIZE	A	B	C	D	E	t
120"	120"	160"		130"	6"	1/2"
108"	108"	144"		116"	6"	1/2"
96"	96"	128"	98 1/2"	106"	6"	1/2"
84"	84"	112"	86 1/2"	94"	6"	1/2"
78"	78"	104"	80 1/2"	88"	6"	1/2"
72"	72"	96"	74 1/4"	82"	6"	1/2"
60"	60"	80"	62 1/4 "	73"	6"	1/2"
48"	48"	64"	50"	61"	5 1/2"	1/2"
42"	42"	56"	43 7/8"	54 3/4"	5 1/2"	3/8"
36"	36"	48"	37 7/8"	46 1/2"	5 1/2"	3/8"
30"	30"	40"	31 7/8"	41"	5 1/2"	3/8"
24"	24"	32"	25 3/4"	35"	5 1/2"	3/8 "
20"	20"	28"	21 25/32"		5 1/2"	3/8"
16"	16"	22"	17 3/8"	25"	5 1/2"	3/8"

NOTE:
FIELD WELD JOINTS AFTER COMPLETION OF BACKFILL WITH THE JOINT ENGAGED, THE INSIDE WELD SHALL BE MADE BY ACCESS THROUGH THE PIPE, THIS OR OTHER APPROVED JOINT RESTRAINING METHODS SHALL BE USED WHERE SHOWN ON THE PLANS.

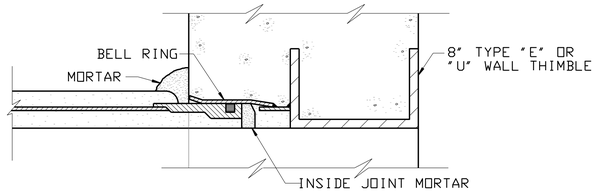

TYPE P STANDARD WALL FITTING AT SLUICE GATES

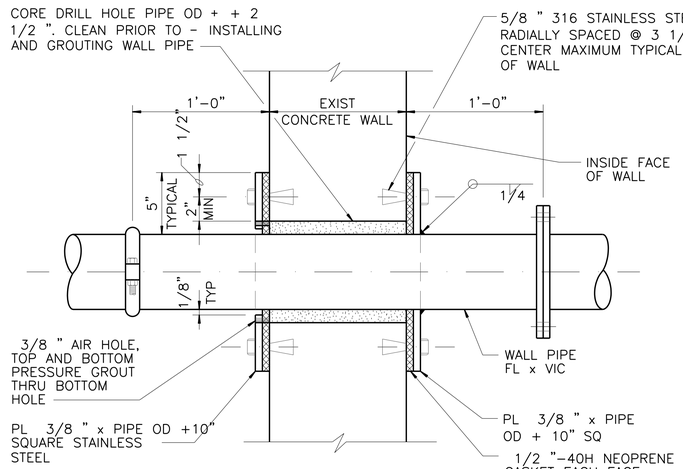

NOTES:
1. SHOWN FOR WATER HOLDING BASIN.
   FOR NON-WATER HOLDING STRUCTURES, CORE DRILL
2. AND GROUT ANNULAR SPACE USING NON-SHRINK GROUT.

TYPE Q FOR EXISTING WALL
NOT TO SCALE

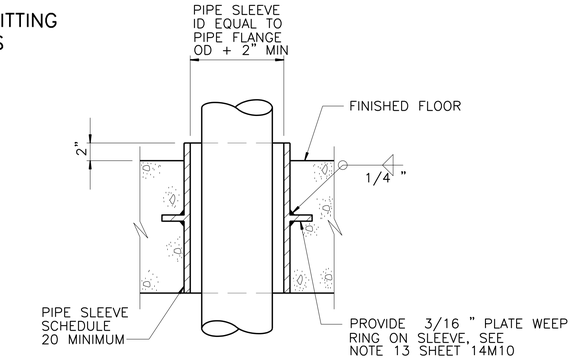

TYPE R FOR FLOORS AND WALLS
NOT TO SCALE

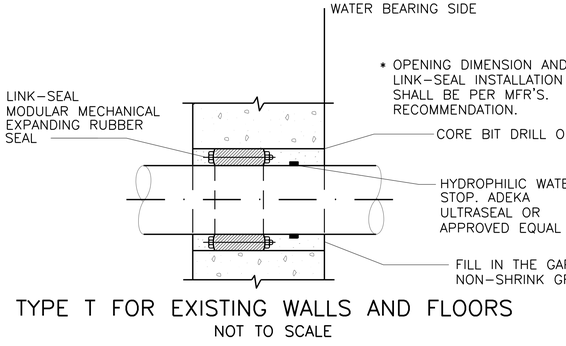

TYPE S FOR FLOORS
NOT TO SCALE

TYPE T FOR EXISTING WALLS AND FLOORS
NOT TO SCALE

PIPE PENETRATION TABLE

CONDITION			TYPE		
	FROM	TO	STEEL PIPE	CAST IRON	PLASTIC PIPE
1	TANK	TANK BELOW WS	D,E,H, OR J	D,E,F, OR J	D OR E
2	TANK	TANK ABOVE WS	D OR E	D OR E	D OR E
3	STRUCTURE	TANK BELOW WS	D,E,H, OR J	D,E,F, OR J	D OR E
4	STRUCTURE	TANK ABOVE WS	A,C,D, OR E	A,C,D, OR E	A,C,D OR E
5	STRUCTURE	STRUCTURE	B OR C	B OR C	B OR C
6	STRUCTURE	OUTSIDE WALL	D OR E	D OR E	D OR E
7	STRUCTURE	ROOF	AS SHOWN		
8	TANK	OUTSIDE WALL	D,E, OR F	D,E, OR G	D OR E

342 STANDARD PIPE PENETRATIONS
NOT TO SCALE

NOTES:

1. WHERE PIPES PASS THROUGH WALL, FLOOR OR CEILINGS, PENETRATIONS SHALL CONFORM TO TABLE EXCEPT AS OTHERWISE NOTED.
2. IN TABLE, "STRUCTURE" SHALL MEAN ROOM, GALLERY, OR ANY SIMILAR ENCLOSURE.
3. IN TABLE, "TANK" SHALL MEAN ANY PART OF A STRUCTURE CONTAINING LIQUID OR IN CONTACT WITH THE EARTH.
4. IN TABLE WATER SURFACE "WS" SHALL MEAN AN ELEVATION 9" ABOVE MAXIMUM WATER SURFACE SHOWN.
5. ALL STEEL SLEEVES SHALL BE STAINLESS STEEL.
6. IN CONDITION 5, TYPES D,E,H AND I SHALL BE USED WHERE ONE SIDE CONTAINS EXPLOSION PROOF EQUIPMENT, WHERE FLOODING IS POSSIBLE OR WHERE SPECIFIED.
7. SEAL FLANGES SHALL BE DRILLED TO 150 POUND STANDARD. EACH JOINT SHALL HAVE GASKETS.
8. PROVIDE CURB WHERE PENETRATING FLOOR, EXCEPT FOR PENETRATION TYPES A AND C.
9. FLEXIBLE JOINTS SHALL BE PROVIDED FOR UNDERGROUND PIPING.
10. RESTRAINED FLEXIBLE COUPLINGS FOR STEEL PIPE SHALL BE DESIGNED FOR 100 PSI LINE PRESSURE UNLESS OTHERWISE SPECIFIED IN ACCORDANCE WITH AWWA MANUAL M11. FIGURES 19.15 AND 19.16 AND TABLE 19.7 SHALL BE USED.
11. INSULATION SHALL NOT EXTEND THROUGH SLEEVES, UNLESS OTHERWISE NOTED.
12. WHERE DUCTILE IRON PIPE IS EMBEDDED IN CONCRETE AT AN EXPANSION JOINT USE TYPE J.
13. WEEP RINGS SHALL HAVE A MINIMUM DIAMETER EQUAL TO THE PIPE DIAMETER PLUS 6-INCHES.
14. TANK SIDE OF WALL SHALL MEAN SIDE OF WALL NORMALLY EXPOSED TO LIQUID, EARTH, OR OUTSIDE ATMOSPHERE.
15. SEAL WITH MASTIC SEALANT WHERE WALL IS EXPOSED TO LIQUID, EARTH, OR EXPLOSION HAZARD AREA.
16. NOT ALL PIPE PENETRATIONS MAY BE USED IN THESE PLANS.
17. OD = OUTSIDE DIAMETER
18. SEE PRESTRESSED CONCRETE PIPE AND TRENCH DETAILS FOR BLOCKING, FLANGED CONNECTIONS AND TEMPORARY TEST PLUGS.
19. WHERE PIPE COVER IS 10 FEET OR MORE, THIS DIMENSION SHALL BE 0.85 D

This Record Drawing is a combination of the sealed engineering contract drawings for this project, modified by information furnished by the contractor reflecting changes in the Project made during construction. The original sealed drawings are on file at the offices of
FREESE AND NICHOLS, INC.
RECORD DRAWINGS PREPARED ON: 06/24/20

Freese and Nichols, Inc.
Texas Registered Engineering Firm F-2144

THE SEAL (NF) ORIGINALLY APPEARED ON THIS DOCUMENT WAS AUTHORIZED BY KORY C. GEE P.E.
ALTERATION OF A SEALED DOCUMENT WITHOUT PROPER AUTHORITY IS A VIOLATION OF THE TEXAS ENGINEERING PRACTICE ACT. ANY PERSON WHO ALTERS THIS DOCUMENT IS SUBJECT TO PROSECUTION FOR OFFENSE UNDER THE TEXAS ENGINEERING PRACTICE ACT

FREESE NICHOLS
4040 Broadway Street, Suite 600
San Antonio, Texas 78209-6350
Phone - (210) 829-3500
Fax - (210) 841-7401
Web - www.freese.com

CITY OF CASTROVILLE
WWTP CAPACITY EXPANSION PROJECT
STANDARD DETAILS
STANDARD MECHANICAL DETAILS #10

NO.	ISSUE	BY	DATE
1	RECORD DRAWINGS	CCG	06/24/20
0	ISSUED FOR CONSTRUCTION	CCG	11/16/16

VERIFY SCALE Bar is one inch on original drawing. If not one inch on this sheet, adjust scale.
0 1"

F&N JOB NO. CVL14259
DATE 6/10/16
DESIGNED CCG
DRAWN DDH
CHECKED TWS
FILE NAME mp-all-dt-typl10.dwg

SHEET SD-10
SEQ.

ACAD Rel: 21.0s (LMS Tech)
Filename: N:\WW\Drawings\mp-all-dt-typl10.dwg
Last Saved: 10/9/2019 10:16 AM Saved By: 03576

Plot Date: 6/18/2020 5:50 PM Plot By: 90119 Filename: N:\WW\Drawings\mp-all-dt-typl10.dwg

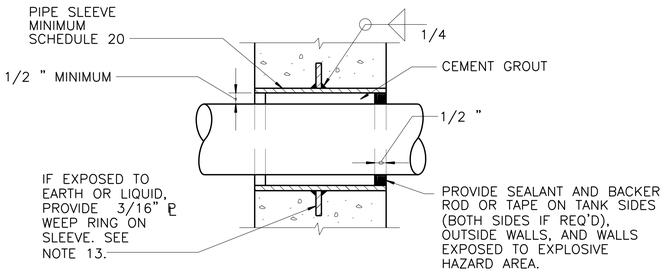

TYPE E FOR WALLS

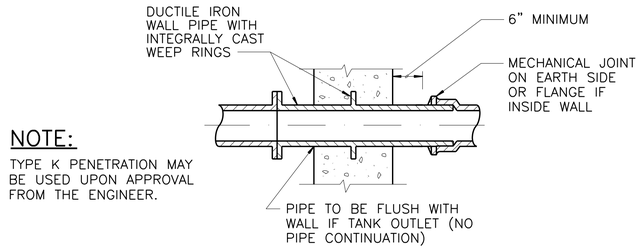

NOTE:

TYPE K PENETRATION MAY BE USED UPON APPROVAL FROM THE ENGINEER.

TYPE F FOR WALLS

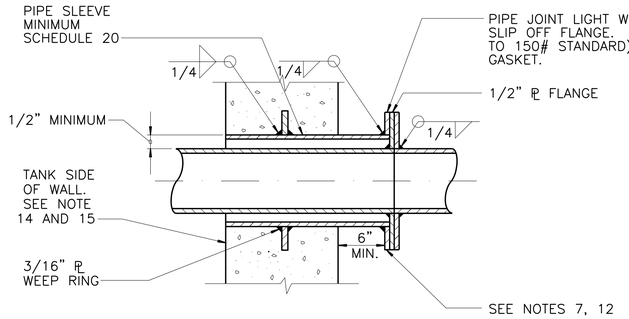

TYPE G FOR WALLS, FLOORS, AND CEILINGS

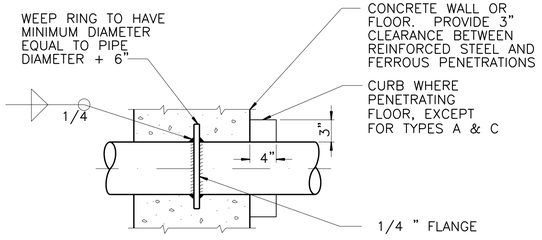

TYPE H FOR WALLS, FLOORS, AND CEILINGS

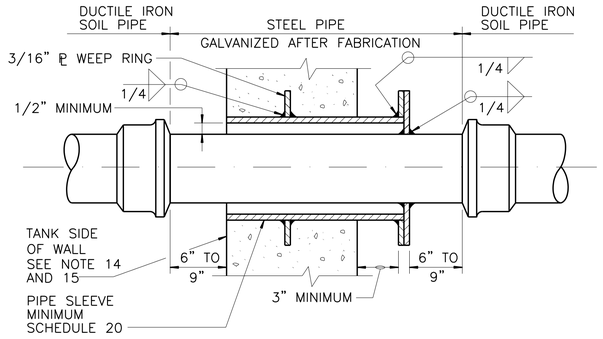

TYPE C(1) FOR WALLS, FLOORS, AND CEILINGS

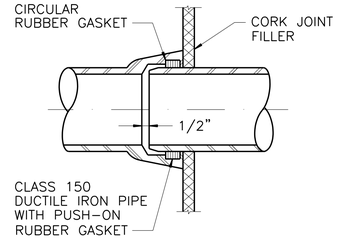

TYPE J FLEXIBLE JOINT ON DRAINAGE LINES AT STRUCTURAL JOINTS

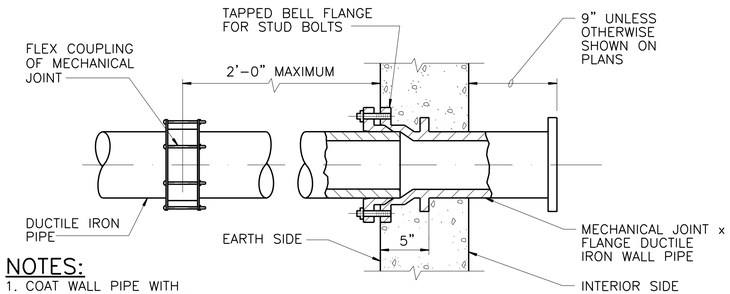

NOTES:

1. COAT WALL PIPE WITH SPECIFIED PAINT SYSTEM PRIOR TO CONCRETE PLACEMENT.
2. ALL FASTENERS SHALL BE PROPERLY SEALED WITH WAX PRIOR TO CONCRETE PLACEMENT.

TYPE K WALL PIPE

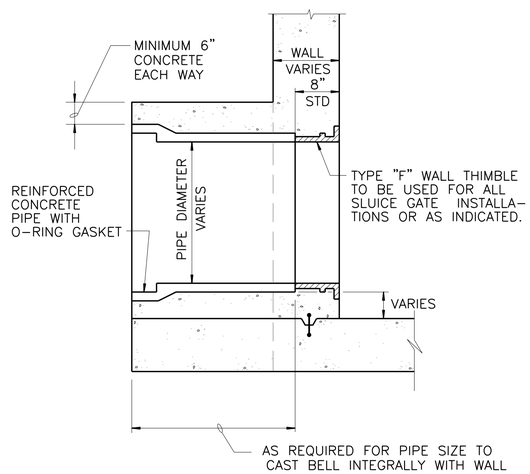

TYPICAL DETAIL AT WALL OF ALL PIPE INSTALLATIONS WITH SLUICE GATE

TYPE L WALL PIPE INSTALLATIONS

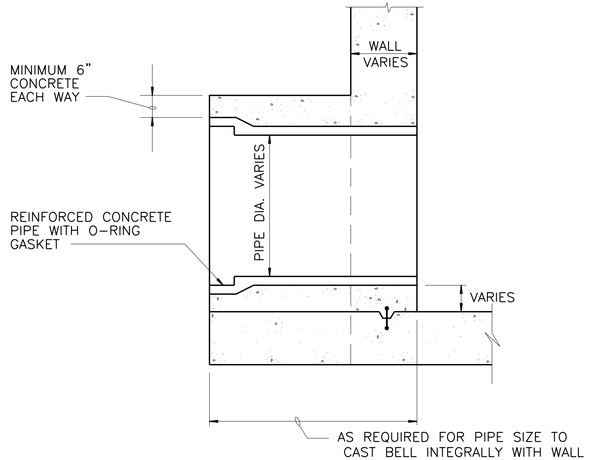

TYPICAL DETAIL AT WALL OF ALL PIPE INSTALLATIONS WITHOUT SLUICE GATE

TYPE M WALL PIPE INSTALLATION

342 STANDARD PIPE PENETRATIONS

NOT TO SCALE

This Record Drawing is a combination of the sealed engineering contract drawings for this project, modified by information furnished by the contractor reflecting changes in the Project made during construction. The original sealed drawings are on file at the offices of FREESE AND NICHOLS, INC.
RECORD DRAWINGS PREPARED ON: 06/24/20

Freese and Nichols, Inc.
Texas Registered Engineering Firm F-2144

THE SEAL (NA) ORIGINALLY APPEARED ON THIS DOCUMENT WAS AUTHORIZED BY CORY C. GEE, P.E.
IT IS A VIOLATION OF THE TEXAS ENGINEERING PRACTICE ACT FOR ANY PERSON TO ALTER AN ORIGINAL SEALED DOCUMENT WITHOUT PROPER NOTIFICATION OF THE ALTERATIONS. ANY ALTERATION IS AN OFFENSE UNDER THE TEXAS ENGINEERING PRACTICE ACT

FREESE NICHOLS
4040 Broadway Street, Suite 600
San Antonio, Texas 78209-6350
Phone (210) 826-3500
Fax (210) 826-3901
Web - www.freese.com

CITY OF CASTROVILLE

WWTP CAPACITY EXPANSION PROJECT

STANDARD DETAILS

STANDARD MECHANICAL DETAILS #11

NO.	ISSUE	BY	DATE
1	RECORD DRAWINGS	CCG	06/24/20
0	ISSUED FOR CONSTRUCTION	CCG	11/16/16

VERIFY SCALE Bar is one inch on original drawing. If not one inch on this sheet, adjust scale.
0 1"

F&N JOB NO. CVL14259
DATE 6/10/16
DESIGNED CCG
DRAWN DDH
CHECKED TWS
FILE NAME mp-all-dt-typl09.dwg

SHEET SD-11
SEQ.

ACAD Rel: 21.0s (LMS Tech)
Filename: N:\WW\Drawings\mp-all-dt-typl09.dwg
Last Saved: 10/9/2019 10:15 AM Saved By: 03576

Plot Date: 6/18/2020 5:50 PM Plot By: 90119 Filename: N:\WW\Drawings\mp-all-dt-typl09.dwg

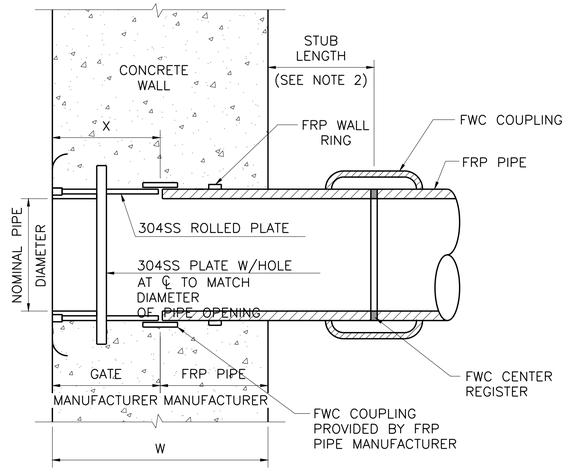

TYPE U FOR NEW WALLS WITH WALL THIMBLE

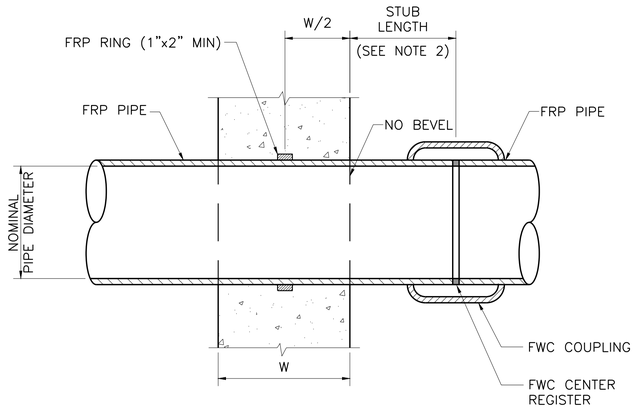

TYPE V FOR NEW WALLS

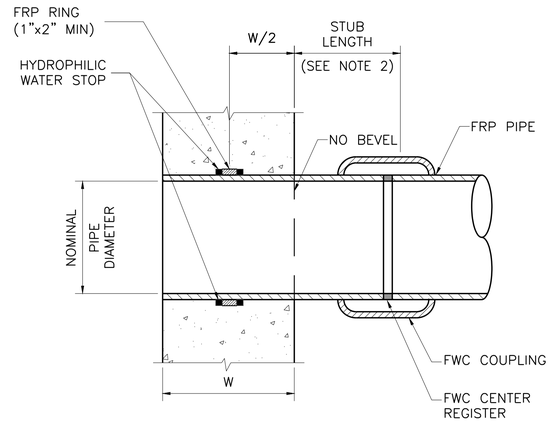

TYPE W FOR NEW WALLS (FREE DISCHARGE)

NOTES:

1. GATE MANUFACTURER TO COORDINATE THE SIZE AND WIDTH OF WALL THIMBLES WITH FRP PIPE MANUFACTURER BEFORE FABRICATING WALL THIMBLES.
2. DISTANCE TO FIRST COUPLING SHALL BE TWO PIPE DIAMETERS OR 10 FEET, WHICHEVER IS LESS.

342 STANDARD PIPE PENETRATIONS (CONT')
NOT TO SCALE

TABLE F–PIPE SPAN AND ROD SIZE FOR LATERAL BRACING		
NOMINAL PIPE SIZE (INCHES)	MAXIMUM PIPE SPAN (FEET)	ROD SIZE (INCHES)
2	20	3/8
2 1/2	20	3/8
3	20	3/8
4	20	3/8
6	30	1/2
8	30	5/8
10	40	3/4
12	40	1
14	40	1
16	50	1
18	50	1
20	50	1 1/4
24	60	1 1/4
30	60	1 1/4

NOTES FOR LATERAL BRACING:

1. PIPES 2 INCH AND LARGER SHALL BE BRACED TO RESIST BOTH LATERAL AND LONGITUDINAL SEISMIC LOADS. LATERAL COMBINATIONS OF PIPE HANGERS AND STRUCTURAL ATTACHMENTS SHALL BE INSTALLED AT VARIOUS ANGLES AND PIPE SPANS TO RESIST A LATERAL LOAD OF TEN PERCENT THE WEIGHT OF THE PIPE FULL OF WATER.
2. SEE TABLE F FOR MAXIMUM SPACING AND ROD SIZE.
3. SEE TABLE B, SHEET 14M8, FOR ACCEPTABLE PIPE HANGERS.
4. STRUCTURAL ATTACHMENT SHALL BE TYPE A WITH EYE RODS THROUGH 5/8 " ROD AND TYPE S FOR 3/4 " ROD AND LARGER.
5. ALL LATERAL BRACING COMPONENTS SHALL BE MADE OF 316 STAINLESS STEEL MATERALS

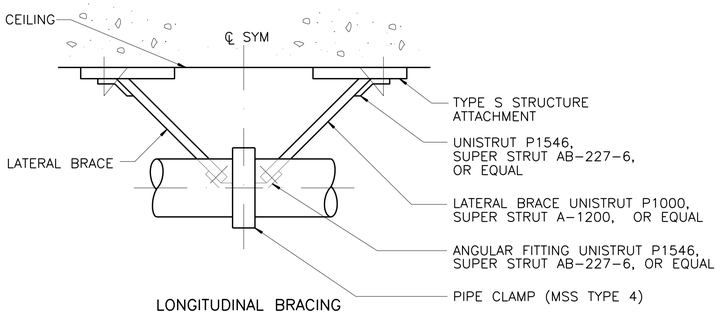

LONGITUDINAL BRACING

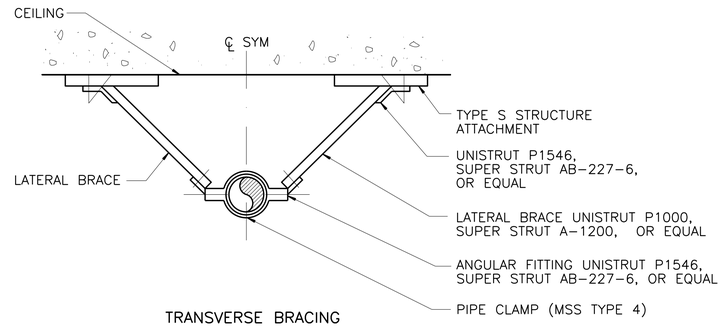

TRANSVERSE BRACING

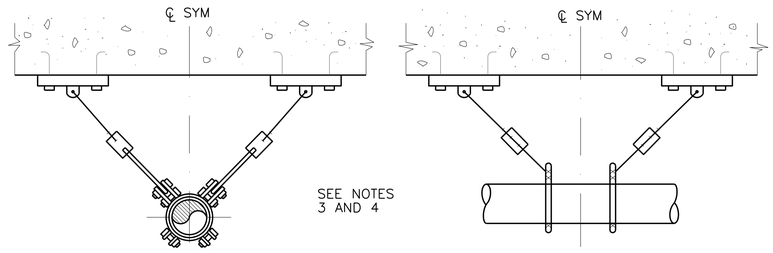

TRANSVERSE BRACING LONGITUDINAL BRACING

343 TYPICAL LATERAL BRACING
NOT TO SCALE

This Record Drawing is a combination of the sealed engineering contract drawings for this project, modified by information furnished by the contractor reflecting changes in the Project made during construction. The original sealed drawings are on file at the offices of FREESE AND NICHOLS, INC.
RECORD DRAWINGS PREPARED ON: 06/24/20

Freese and Nichols, Inc.
Texas Registered Engineering Firm F–2144

THE SEAL (NA) ORIGINALLY APPEARED ON THIS DOCUMENT WAS AUTHORIZED BY (NAME) ON (DATE)
ALTERATION OF A SEALED DOCUMENT WITHOUT PROPER AUTHORIZATION OF THE RESPONSIBLE ENGINEER IS AN OFFENSE UNDER THE TEXAS ENGINEERING PRACTICE ACT

FREESE NICHOLS
4040 Broadway Street, Suite 600
San Antonio, Texas 78209–6350
Phone (210) 829–3800
Fax (210) 829–3901
Web – www.freese.com

CITY OF CASTROVILLE
WWTP CAPACITY EXPANSION PROJECT
STANDARD DETAILS
STANDARD MECHANICAL DETAILS #12

NO.	ISSUE	BY	DATE
1	RECORD DRAWINGS	CCG	06/24/20
0	ISSUED FOR CONSTRUCTION	CCG	11/16/16

F&N JOB NO. CVL14259
DATE 6/10/16
DESIGNED CCG
DRAWN DDH
CHECKED TWS
FILE NAME mp–all–dt–typl11.dwg

VERIFY SCALE Bar is one inch on original drawing. If not one inch on this sheet, adjust scale.
0 1"

SHEET SD–12
SEQ.

ACAD Rel: 21.0s (LMS Tech)
Filename: N:\WW\Drawings\mp–all–dt–typl11.dwg
Last Saved: 10/9/2019 10:15 AM Saved By: 03576

Plot Date: 6/18/2020 5:51 PM Plot By: 90119 Filename: N:\WW\Drawings\mp–all–dt–typl11.dwg

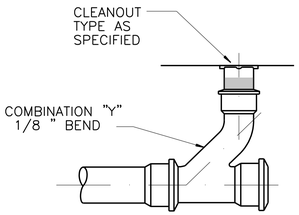

346 INTERIOR CLEANOUT
NOT TO SCALE

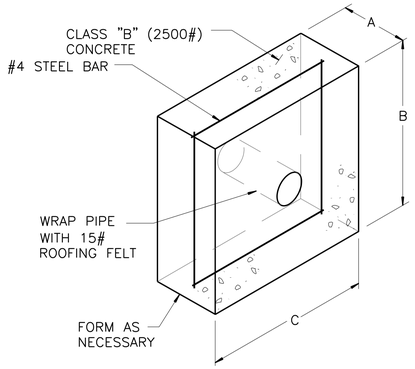

KEEP CONCRETE CLEAR OF PIPE JOINTS AND BOLTS

EXAMPLE A

PIPE NOMINAL DIA. (IN.)	BENDS		90°	45°	22 1/2°	11 1/4°
	* VOL. REQ'D.	C.F.	28.27	22.61	1 1.33	5.65
	A	FT.	1.75	1.5	1.0	0.75
	B	FT.	4.0	3.88	3.36	2.75
	C	FT.	4.0	3.88	3.36	2.75
	* VOL. REQ'D.	C.F.	50.27	40.21	20.11	10.05
	A	FT.	2.0	1.75	1.5	1.0
	B	FT.	5.0	4.8	3.66	3.2
	C	FT.	5.0	4.8	3.66	3.2
	* VOL. REQ'D.	C.F.	78.54	62.83	31.41	15.71
	A	FT.	2.25	2.0	1.75	1.5
	B	FT.	5.9	5.6	4.25	3.25
	C	FT.	5.9	5.6	4.25	3.25
	* VOL. REQ'D.	C.F.	153.94	123.15	61.57	30.79
	A	FT.	4.0	3.5	2.0	1.75
	B	FT.	6.2	6.0	5.54	4.2
	C	FT.	6.2	6.0	5.54	4.2

* VOLUME CALCULATED ON THE BASIS OF CONCRETE REACHING THRUST ON THE RESPECTIVE BENDS UNDER AN INTERNAL PRESSURE OF 150 PSIG AT THE RATE OF 150 LB. WT. PER CU.FT. OF CONCRETE. DIMENSIONS MAY VARY FOR EQUIVALENT VOLUME OF CONCRETE.

350 VERTICAL TIE-DOWN BLOCK DETAIL
NOT TO SCALE

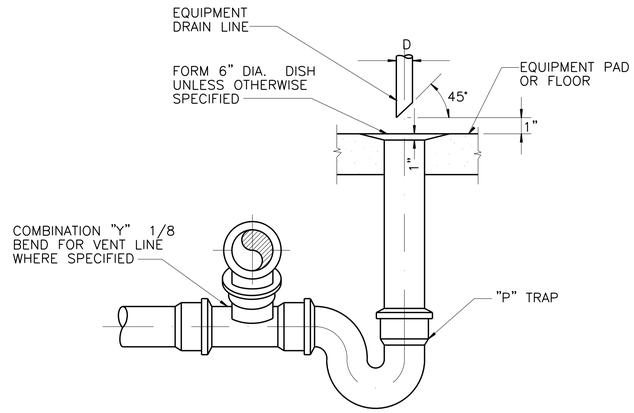

TYPE B

351 EQUIPMENT DRAIN
NOT TO SCALE

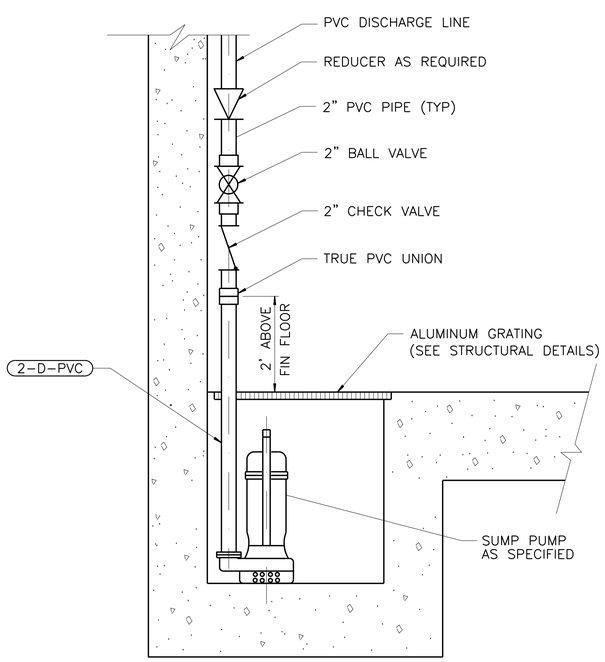

352 SUMP PUMP STANDARD DETAIL
NOT TO SCALE

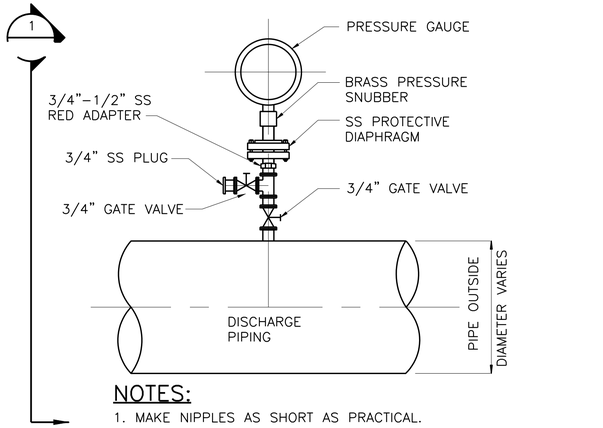

NOTES:
1. MAKE NIPPLES AS SHORT AS PRACTICAL.
2. FOR GAUGES IN A VAULT OR GAUGES INSTALLED BELOW GRATING, CONTRACTOR SHALL ROTATE THE GAUGE AND ADJUST THE GAUGE PIPING PER THE DIRECTION OF THE OWNER.

358 PRESSURE GAUGE/MANUAL BLOW-OFF ASSEMBLY
NOT TO SCALE

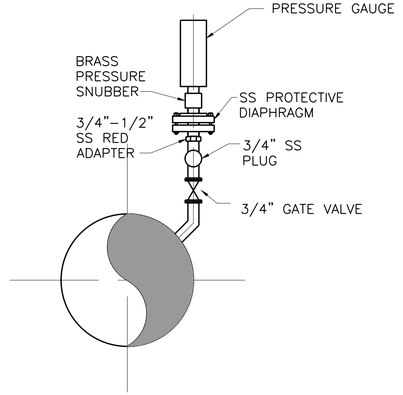

1 SECTION
NOT TO SCALE

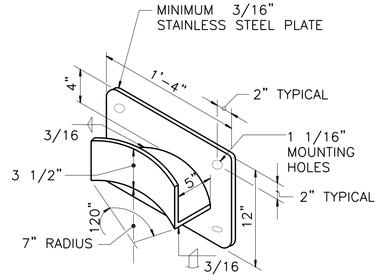

NOTE: ALL CORNERS SHALL HAVE A 3/4" RADIUS

361 HOSE RACK
NOT TO SCALE

This Record Drawing is a combination of the sealed engineering contract drawings for this project, modified by information furnished by the contractor reflecting changes in the Project made during construction. The original sealed drawings are on file at the offices of
FREESE AND NICHOLS, INC.
RECORD DRAWINGS PREPARED ON:
06/24/20

Freese and Nichols, Inc.
Texas Registered Engineering Firm F-2144

THE SEAL (NA) ORIGINALLY APPEARED ON THIS DOCUMENT WAS AUTHORIZED BY (NAME) C. CAE PE
ALTERATION OF A SEALED DOCUMENT WITHOUT PROPER AUTHORIZATION AND SPECIFIC DESCRIPTION OF ALL REVISIONS IS AN OFFENSE UNDER THE TEXAS ENGINEERING PRACTICE ACT

FREESE NICHOLS
4040 Broadway Street, Suite 600
San Antonio, Texas 78209-6350
Phone - (210) 829-3500
Fax - (210) 841-7401
Web - www.freese.com

CITY OF CASTROVILLE
WWTP CAPACITY EXPANSION PROJECT
STANDARD DETAILS
STANDARD MECHANICAL DETAILS #13

F&N JOB NO. CVL14259
DATE 6/10/16
DESIGNED CCG
DRAWN DDH
CHECKED TWS
FILE NAME mp-all-dt-typl12.dwg

NO.	ISSUE	DATE	BY
	RECORD DRAWINGS	06/24/20	CCG
1	ISSUED FOR CONSTRUCTION	11/16/16	CCG

VERIFY SCALE Bar is one inch on original drawing. If not one inch on this sheet, adjust scale.
0" 1"

SHEET SD-13
SEQ.

ACAD Rel: 21.0s (LMS Tech)
Filename: N:\WW\Drawings\mp-all-dt-typl12.dwg
Last Saved: 10/9/2019 10:15 AM Saved By: 03576

Plot Date: 6/18/2020 5:51 PM Plot By: 90119 Filename: N:\WW\Drawings\mp-all-dt-typl12.dwg

NOTES:

1. FOR ALL TYPE UTILITY STATIONS, PROVIDE 25–FOOT REINFORCED BRAIDED HEAVY DUTY HOSE.
2. UTILITY STATIONS MOUNTED TO CONCRETE SHALL BE SECURED WITH EPOXY ADHESIVE ANCHORS.
3. ALL WATER SUPPLY PIPING ABOVE GROUND SHALL BE COPPER.

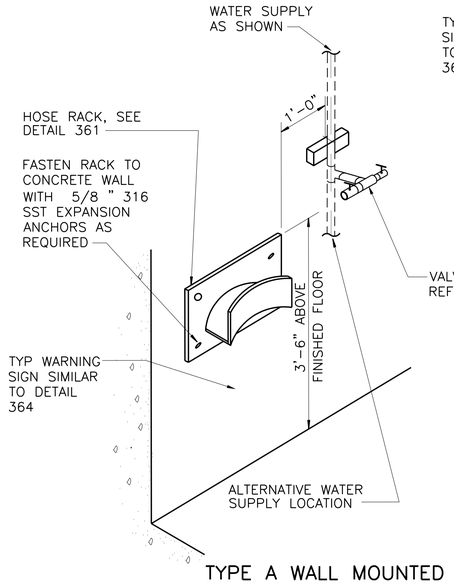

TYPE A WALL MOUNTED

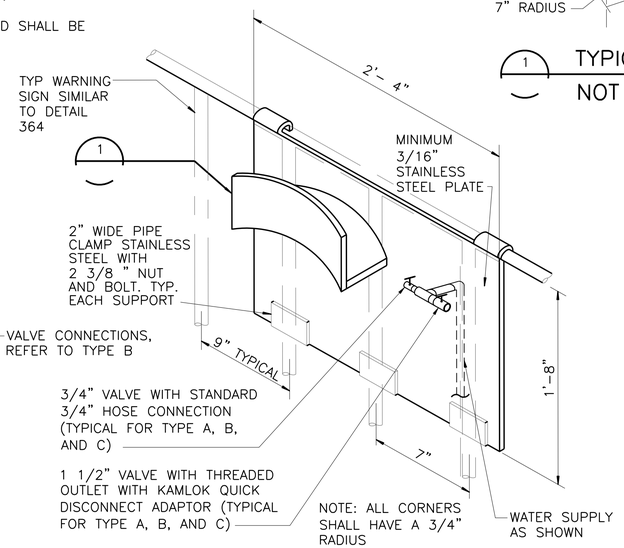

TYPE B RAIL MOUNTED

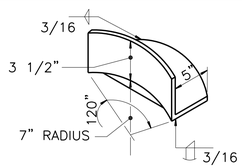

1 TYPICAL SECTION
NOT TO SCALE

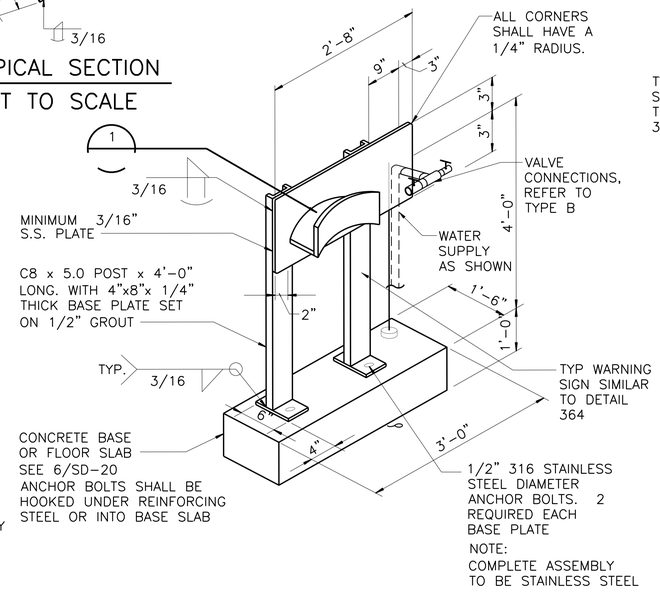

TYPE C POST MOUNTED

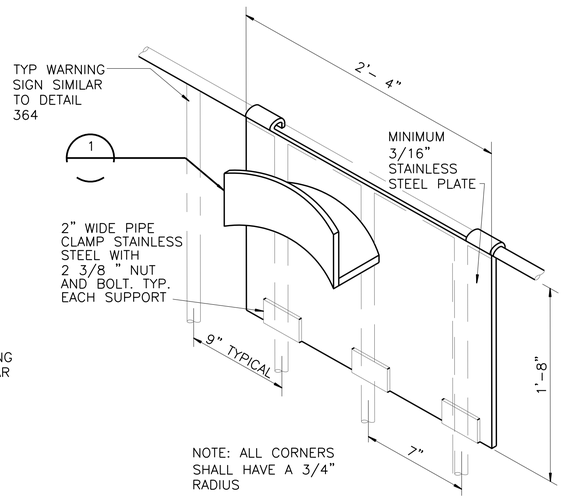

TYPE D RAIL MOUNTED

362 UTILITY STATION
NOT TO SCALE

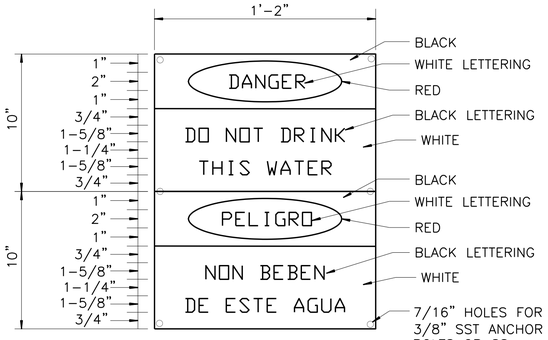

NOTES:

1. WARNING SIGN SHALL BE 0.060 INCH ALUMINUM WITH EMBEDDED FADERPROOF LEGENDS.
2. LETTER HEIGHTS ARE APPROXIMATE.
3. CONTRACTOR SHALL USE 6 HOLES FOR INSTALLING SIGN ON WALLS AND A MINIMUM OF 4 HOLES FOR INSTALLING SIGN ON HANDRAILS.

364 TYPICAL WARNING SIGN
NOT TO SCALE

This Record Drawing is a combination of the sealed engineering contract drawings for this project, modified by information furnished by the contractor reflecting changes in the Project made during construction. The original sealed drawings are on file at the offices of
FREESE AND NICHOLS, INC.
RECORD DRAWINGS PREPARED ON:
06/24/20

Freese and Nichols, Inc.
Texas Registered Engineering Firm F-2144

THE SEAL HAS ORIGINALLY APPEARED ON THIS DOCUMENT WAS AUTHORIZED BY ROBERT C. GEE P.E.
ON 6/24/20 IT IS A VIOLATION OF LAW FOR ANY PERSON TO ALTER THIS SEALED DOCUMENT WITHOUT PROPER AUTHORIZATION AND A SECOND SEAL AFFIXED TO ALL ALTERATIONS. ANY ALTERATION MADE TO THIS DOCUMENT IS AN OFFENSE UNDER THE TEXAS ENGINEERING PRACTICE ACT

FREESE NICHOLS
4040 Broadway Street, Suite 600
San Antonio, Texas 78209–6350
Phone – (210) 824–3500
Fax – (210) 826–8901
Web – www.freese.com

CITY OF CASTROVILLE

WWTP CAPACITY EXPANSION PROJECT

STANDARD DETAILS

STANDARD MECHANICAL DETAILS #14

F&N JOB NO. CVL14259
DATE 6/10/16
DESIGNED CCG
DRAWN DDH
CHECKED TWS
FILE NAME mp–all–dt–typl13.dwg

NO.	ISSUE	BY	DATE
	RECORD DRAWINGS	CCG	06/24/20
1	ISSUED FOR CONSTRUCTION	CCG	11/16/16

VERIFY SCALE Bar is one inch on original drawing. If not one inch on this sheet, adjust scale.
0 1"

SHEET
SD–14
SEQ.

ACAD Rel: 21.0s (LMS Tech)
Filename: N:\WW\Drawings\mp–all–dt–typl13.dwg
Last Saved: 10/9/2019 9:59 AM Saved By: 03576

Plot Date: 6/18/2020 5:51 PM Plot By: 90119 Filename: N:\WW\Drawings\mp–all–dt–typl13.dwg

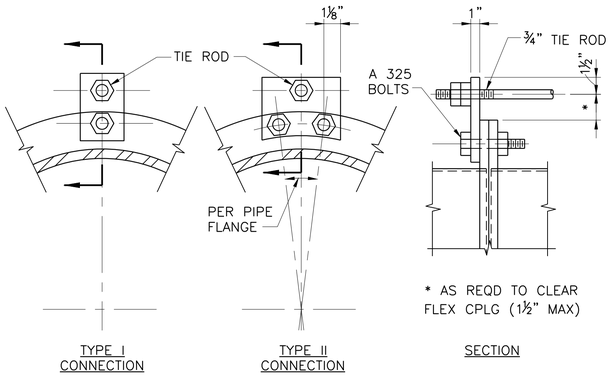

ROD SCHEDULE FOR DIP		
PIPE THRUST SEE NOTE #2	TYPE OF CONECT ION	NO. RODS
0-6,000#	I	2
6,001-12,000#	II	2
12,001-18,000 #	II	3
18,001-24,000 #	II	4
24,001-30,000 #	II	5

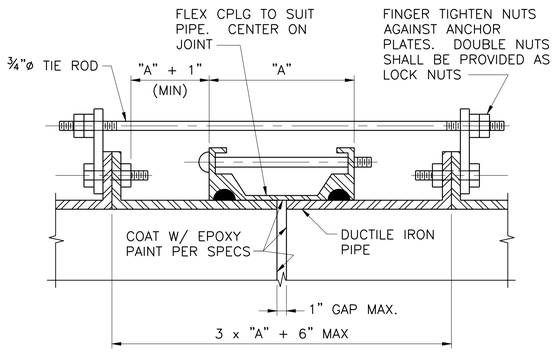

NOTES:

1. ALL EXPOSED FLEXIBLE COUPLINGS SHALL HAVE TIE RODS UNLESS SPECIFICALLY INDICATED OTHERWISE ON THE DRAWINGS.
2. PIPE THRUST SHALL BE BASED ON TEST PRESSURE.
3. PIPE THRUST = 0.7854 x D2 x TEST PRESSURE, WHERE D IS PIPE OD.
4. MINIMUM TIE ROD YIELD 48,000 PSI.
5. FOR THRUSTS GREATER THAN 30,000 POUNDS, ADD ONE ¾ INCH DIAMETER ROD FOR EVERY 6,000 PONDS INCREASE IN THRUST.
6. CONTRACTOR MAY USE ONE INCH DIAMETER ROD FOR THRUSTS GREATER THAN 30,000 POUNDS. NUMBER OF ONE INCH RODS = NUMBER OF ¾ INCH RODS X 0.5625. ROUND OFF TO THE NEXT LARGER NUMBER.
7. ALL ROD CONNECTIONS SHALL BE TYPE II FOR THRUSTS GREATER THAN 30,000 POUNDS.
8. GRIND ALL CORNERS SMOOTH.
9. ALL BURIED THRUST HARNESS ASSEMBLIES SHALL HAVE TWO WRAPS OF WAX PAPER.

TYPE A

366 FLEXIBLE COUPLING WITH THRUST HARNESS

NOT TO SCALE

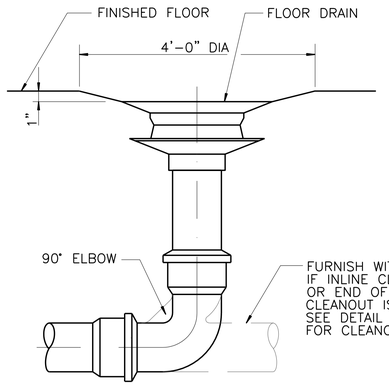

TYPE A FLOOR DRAIN

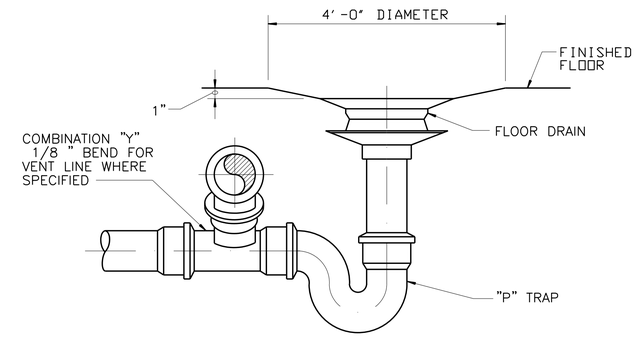

TYPE B FLOOR DRAIN

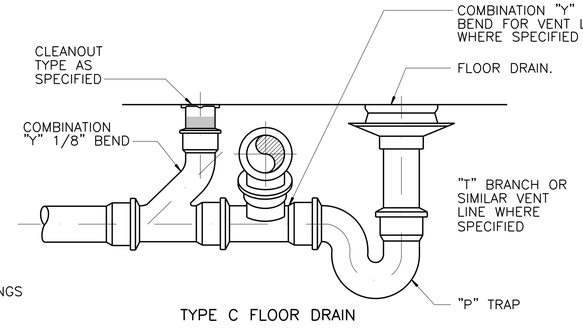

TYPE C FLOOR DRAIN

367 FLOOR DRAIN

NOT OT SCALE

NOTES:

1. VENT AS SHOWN ON DRAWINGS OR WHERE SPECIFIED.

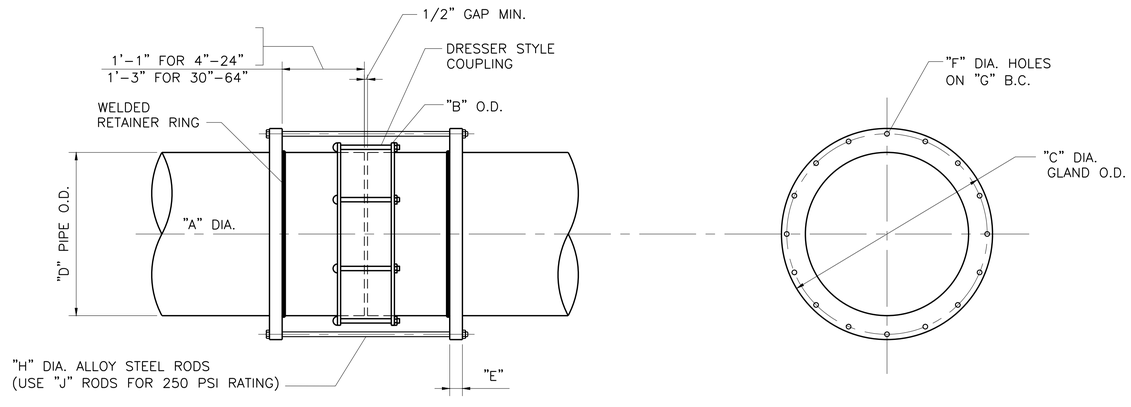

* Pipe O.D. May Vary – VERIFY w/ MFR.

A in.	B Maximum in.	C in.	D Pipe O.D. in. *	E in.	F B.H. Dia. in.	G B.C. in.	H Tie Rodø in.	J No. Rods	Tie Rod Length in.
4	9.00	11.50	4.80	1.00	⅞	9.88	¾	4	31½
6	11.00	13.50	6.90	1.00	⅞	11.88	¾	4	31½
8	13.06	15.63	9.05	1.00	⅞	13.94	¾	4	31½
10	15.81	18.37	11.10	1.00	⅞	16.69	¾	4	31½
12	18.06	20.63	13.20	1.00	⅞	18.94	¾	6	31½
14	19.31	23.00	15.30	1.50	⅞	21.32	¾	10	31½
16	21.38	24.63	17.40	2.00	⅞	23.01	¾	12	31½
18	23.50	27.00	19.50	2.00	⅞	25.38	¾	12	31½
20	25.63	29.13	21.60	2.00	⅞	27.51	¾	14	31½
24	29.19	33.38	25.80	2.00	⅞	31.69	¾	16	31½
30	37.00	40.11	32.00	2.25	1⅛	38.25	1	20	39½
36	43.31	46.30	38.30	2.44	1⅛	44.56	1	24	39½
42	49.50	53.12	44.50	2.62	1⅜	51.00	1¼	28	41½
48	55.81	60.00	50.80	2.81	1⅜	57.50	1¼	32	41½
54	62.57	66.88	57.56	3.00	1⅜	64.38	1¼	36	41½
60	66.41	73.00	61.61	3.12	1¾	69.25	1½	26	42
64	70.47	80.00	65.67	3.38	1¾	76.00	1½	26	42

TYPE B

366 FLEXIBLE COUPLING – RESTRAINED

NOT TO SCALE

This Record Drawing is a combination of the sealed engineering contract drawings for this project, modified by information furnished by the contractor reflecting changes in the Project made during construction. The original sealed drawings are on file at the offices of FREESE AND NICHOLS, INC.
RECORD DRAWINGS PREPARED ON: 06/24/20

Freese and Nichols, Inc.
Texas Registered Engineering Firm F-2144

THE SEAL HAS ORIGINALLY APPEARED ON THIS DOCUMENT WAS AUTHORIZED BY [illegible] ON [illegible]. IT IS A VIOLATION FOR ANY PERSON TO ALTER THIS SEALED DOCUMENT WITHOUT PROPER AUTHORIZATION AND A NOTATION OF THE ALTERATION MADE. IT IS ALSO AN OFFENSE UNDER THE TEXAS ENGINEERING PRACTICE ACT

FREESE NICHOLS
4040 Broadway Street, Suite 600
San Antonio, Texas 78209-6350
Phone – (210) 538-5300
Fax – (210) 826-2901
Web – www.freese.com

CITY OF CASTROVILLE

WWTP CAPACITY EXPANSION PROJECT

STANDARD DETAILS

STANDARD MECHANICAL DETAILS #15

NO.	ISSUE	BY	DATE
	RECORD DRAWINGS	CCG	06/24/20
1	ISSUED FOR CONSTRUCTION	CCG	11/16/16

VERIFY SCALE Bar is one inch on original drawing. If not one inch on this sheet, adjust scale.

F&N JOB NO. CVL14259
DATE 6/10/16
DESIGNED CCG
DRAWN DDH
CHECKED TWS
FILE NAME mp-all-dt-typ15.dwg

SHEET SD-15
SEQ.

ACAD Rel: 21.0s (LMS Tech)
Filename: N:\WW\Drawings\mp-all-dt-typ15.dwg
Last Saved: 10/9/2019 10:04 AM Saved By: 03576

Plot Date: 6/18/2020 5:51 PM Plot By: 90119 Filename: N:\WW\Drawings\mp-all-dt-typ15.dwg

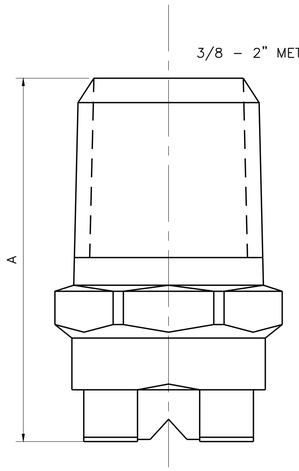

NOTES:

1. CONTRACTOR TO COORDINATE WITH NOZZLED MANUFACTURER ON NOZZLE SIZE AND ITS ACCESSORIES BEFORE PLACING ORDER FOR THE NOZZLES.
2. UNLESS OTHERWISE SPECIFIED NOZZLE SHOULD BE MADE OF 316 STAINLESS STEEL.

NF DIMENSIONS				
PIPE SIZE	DIM. FOR METAL ONLY A	DIM. FOR METAL ONLY B	WT. (OZ.) METAL	WT. (OZ.) PLAS.
1	2.19	1.38	8.00	2.00

GALLONS PER MINUTES @ PSI						
MALE PIPE SIZE	NOZZLE NUMBER	K FACTOR	30 PSI	40 PSI	60 PSI	80 PSI
1	NF750	11.9	64.9	75.0	92.0	106

368 NF STANDARD FAN NOZZLE
NOT TO SCALE

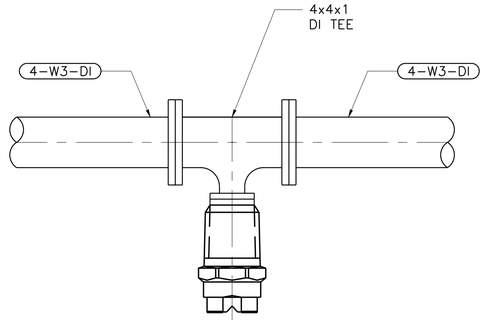

NOZZLE INSTALLATION DETAIL
NOT TO SCALE

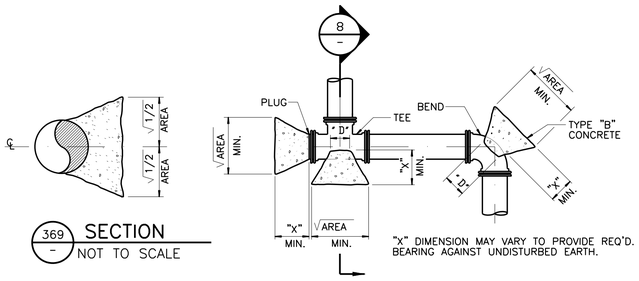

369 SECTION
NOT TO SCALE

HORIZONTAL BLOCKING TABLE

PLANT WATER, FIRE WATER & POTABLE WATER SYSTEMS WORKING PRESSURES OF 50 PSIG TO 100 PSIG

PIPE SIZE	"X"–DIM. FT.	5°–10° MIN. AREA	11°–15° MIN. AREA	22°–30° MIN. AREA	45° MIN. AREA	90° MIN. AREA	TEE & PLUG MIN. AREA
2"–4"	0.75	0.13	0.30	0.59	1.15	2.13	1.51
6"	1.00	.029	0.65	1.30	2.55	4.70	3.33
8"	1.00	0.51	1.14	2.26	4.44	8.20	5.80
10"	1.00	0.78	1.74	3.47	6.81	12.57	8.89
12"	1.25	1.10	2.46	4.90	9.62	17.77	12.57
16"	1.50	1.88	4.22	8.41	16.49	30.47	21.54
24"	2.00	3.95	8.87	17.65	34.62	63.98	45.24
30"	2.25	5.87	13.20	26.27	51.52	95.20	67.32
36"	2.75	8.07	18.14	36.11	70.82	130.86	92.53
42"	3.50	10.51	23.62	47.01	92.21	170.37	120.47
48"	4.00	13.16	29.56	58.84	115.41	213.26	150.80
54"	4.50	15.98	35.92	71.49	140.23	259.11	183.22
60"	5.00	18.97	42.64	84.86	166.46	307.58	217.49
72"	5.50	25.37	57.01	113.47	222.59	411.28	290.82
84"	6.00	32.23	72.43	144.15	282.77	522.48	369.45
96"	7.00	39.47	88.68	176.51	346.24	639.78	452.39

MEDIUM PRESSURE LINES; PROCESS LINES, PUMP DISCHARGE LINES, ETC. WORKING PRESSURES OF 25 PSIG TO 50 PSIG

PIPE SIZE	"X"–DIM. FT.	5°–10° MIN. AREA	11°–15° MIN. AREA	22°–30° MIN. AREA	45° MIN. AREA	90° MIN. AREA	TEE & PLUG MIN. AREA
2"–4"	0.75	0.07	0.15	0.29	0.58	1.07	0.75
6"	1.00	0.15	0.33	0.65	1.27	2.35	1.66
8"	1.00	0.25	0.57	1.31	2.22	4.10	2.90
10"	1.00	0.39	0.87	1.73	3.40	6.29	4.45
12"	1.25	0.55	1.23	2.45	4.81	8.89	6.28
16"	1.50	0.94	2.11	4.20	8.24	15.23	10.77
24"	2.00	1.97	4.43	8.83	17.31	31.99	22.62
30"	2.25	2.94	6.60	13.13	25.76	47.60	33.66
36"	2.75	4.04	9.07	18.05	35.41	65.43	46.27
42"	3.50	5.25	11.81	23.50	46.10	85.19	60.24
48"	4.00	6.58	14.78	29.42	57.71	106.63	75.40
54"	4.50	7.99	17.96	35.74	70.11	129.55	91.61
60"	5.00	9.49	21.32	42.43	83.23	153.79	108.75
72"	5.50	12.69	28.51	56.74	111.29	205.64	145.41
84"	6.00	16.12	36.21	72.08	141.38	261.24	184.73
96"	7.00	19.73	44.34	88.26	173.12	319.89	226.19

LOW PRESSURE LINES; GRAVITY LINES, DRAINS, ETC., (WITH STATIC HEAD ONLY) WORKING PRESSURES OF 5 PSIG TO 25 PSIG

PIPE SIZE	"X"–DIM. FT.	5°–10° MIN. AREA	11°–15° MIN. AREA	22°–30° MIN. AREA	45° MIN. AREA	90° MIN. AREA	TEE & PLUG MIN. AREA
2"–4"	0.75	0.03	0.07	0.15	0.29	0.53	0.38
6"	1.00	0.07	0.16	0.32	0.64	1.18	0.83
8"	1.00	0.13	0.28	0.57	1.11	2.05	1.45
10"	1.00	0.19	0.44	0.87	1.70	3.14	2.22
12"	1.25	0.27	0.62	1.23	2.40	4.44	3.14
16"	1.50	0.47	1.06	2.10	4.12	7.62	5.39
24"	2.00	0.99	2.22	4.41	8.66	15.99	11.31
30"	2.25	1.47	3.30	6.57	12.88	23.80	16.83
36"	2.75	2.02	4.53	9.03	17.71	32.72	23.13
42"	3.50	2.63	5.90	11.75	23.05	42.59	30.12
48"	4.00	3.29	7.39	14.71	28.85	53.31	37.70
54"	4.50	4.00	8.98	17.87	35.06	64.78	45.80
60"	5.00	4.74	10.66	21.22	41.62	76.90	54.37
72"	5.50	6.34	14.25	28.37	55.65	102.82	72.71
84"	6.00	8.06	18.11	36.04	70.69	130.62	92.36
96"	7.00	9.87	22.17	44.13	86.56	159.94	113.10

NOTES:

1. THRUST BLOCK AREAS SHOWN ARE BASED ON TEST PRESSURES OF 100 P.S.I.G. FOR PLANT WATER, ETC., 50 P.S.I.G. FOR PROCESS LINES AND 25 P.S.I.G. FOR GRAVITY LINE AND 200 P.S.F. PER VERTICAL FOOT OF SOIL COVER MEASURED TO CENTERLINE OF PIPE.
2. MINIMUM AREAS SHOWN ARE IN SQUARE FEET AND ARE BASED UPON MIN. 4.0 FEET OF COVER.
3. BEARING MUST BE ON UNDISTURBED EARTH.
4. ADJUST THRUST BLOCK AREAS ACCORDINGLY IF PRESSURES, DEPTH OF COVER AND/OR SOIL BEARING VALUE VARIES.

369 TYPICAL BLOCKING DETAIL
NOT TO SCALE

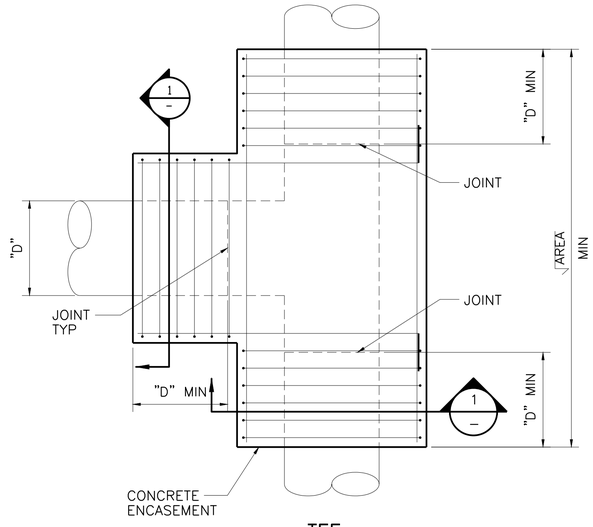

TEE

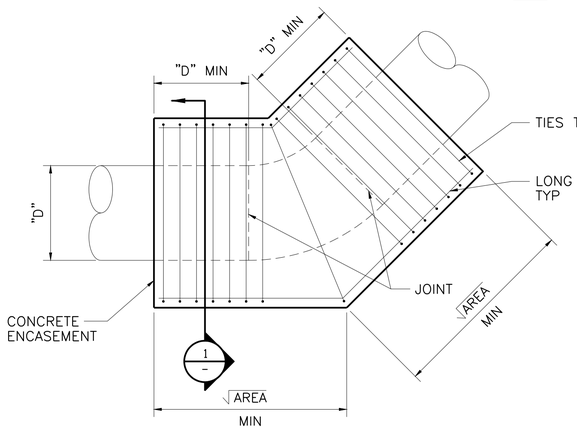

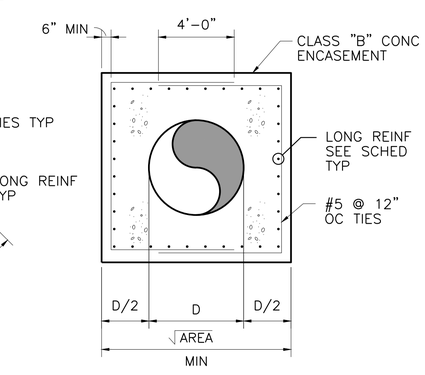

1 SECTION
NOT TO SCALE

HORIZONTAL & VERTICAL BENDS
NOT TO SCALE

370 CONCRETE ENCASEMENT DETAIL
NOT TO SCALE

This Record Drawing is a combination of the sealed engineering contract drawings for this project, modified by information furnished by the contractor reflecting changes in the Project made during construction. The original sealed drawings are on file at the offices of FREESE AND NICHOLS, INC.
RECORD DRAWINGS PREPARED ON: 06/24/20

Freese and Nichols, Inc.
Texas Registered Engineering Firm F–2144

THE SEAL (NF) ORIGINALLY APPEARED ON THIS DOCUMENT WAS AUTHORIZED BY KORY C. GEE, P.E. ALTERATION OF A SEALED DOCUMENT WITHOUT PROPER AUTHORIZATION OF THE RESPONSIBLE ENGINEER IS AN OFFENSE UNDER THE TEXAS ENGINEERING PRACTICE ACT

FREESE NICHOLS
4040 Broadway Street, Suite 600
San Antonio, Texas 78209–6350
Phone – (210) 824–3000
Fax – (210) 826–2901
Web – www.freese.com

CITY OF CASTROVILLE
WWTP CAPACITY EXPANSION PROJECT
STANDARD DETAILS
STANDARD MECHANICAL DETAILS #16

NO.	ISSUE	BY	DATE
	RECORD DRAWINGS	CCG	06/24/20
1	ISSUED FOR CONSTRUCTION	CCG	11/16/16

F&N JOB NO. CVL14259
DATE 6/10/16
DESIGNED CCG
DRAWN DDH
CHECKED TWS
FILE NAME mp-all-dt-typl16.dwg

VERIFY SCALE Bar is one inch on original drawing. If not one inch on this sheet, adjust scale.
0" 1"

SHEET SD–16
SEQ.

ACAD Rel: 21.0s (LMS Tech)
Filename: N:\WW\Drawings\mp-all-dt-typl16.dwg
Last Saved: 10/9/2019 10:08 AM Saved By: 03576

Plot Date: 6/18/2020 5:52 PM Plot By: 90119 Filename: N:\WW\Drawings\mp-all-dt-typl16.dwg

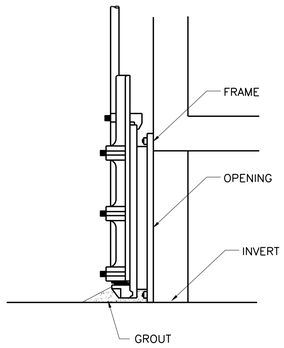

SURFACE MOUNTED GATE
(FOR EXISTING STRUCTURE)

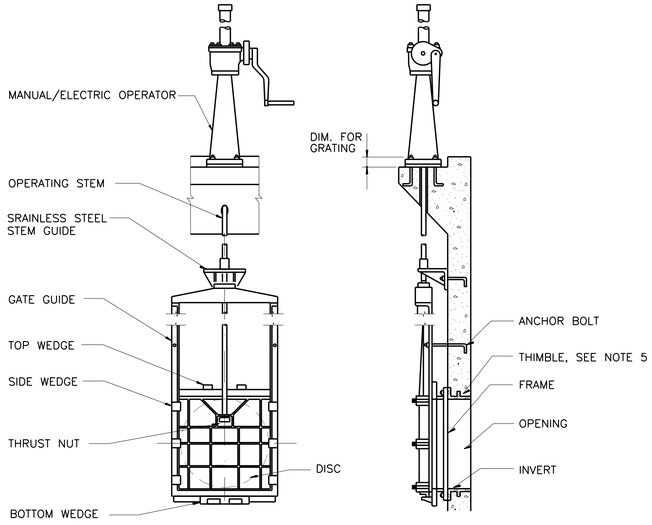

NOTES:

1. ALL THE COMPONENTS NECESSARY FOR GATE INSTALLATION SHOULD BE MADE OF STAINLESS STEEL MATERIALS.
2. MINIMUM SPACING REQUIREMENTS BETWEEN STEM GUIDE AND CONCRETE WALLS WILL BE PROVIDED AS PER MANUFACTURERS RECOMMENDATIONS.
3. MANUFACTURER SHALL PROVIDE APPROPRIATE THIMBLE AND STEM GUIDES TO MATCH RADIUS AND/OR TAPER OF MOUNTING WALL WHERE APPLICABLE AT NO ADDITIONAL COST TO THE OWNER.

NOTES:

1. GATE MANUFACTURER SHALL COORDINATE WITH ELECTRIC MOTOR ACTUATOR MANUFACTURER TO PROVIDE COMPLETE AND OPERATIONAL GATE MECHANISM.
2. THIMBLE REQUIRED FOR NEW WALL CONSTRUCTION ONLY. FOR EXISTING WALL CONSTRUCTION CONTRACTOR SHALL CORE DRILL EXISTING WALL FOR ANCHOR BOLT INSTALLATION.
3. REFER TO GATE SPECIFICATION FOR ADDITIONAL GATE DETAILS.

372 TYPICAL THIMBLE MOUNTED GATE INSTALLATION
NOT TO SCALE

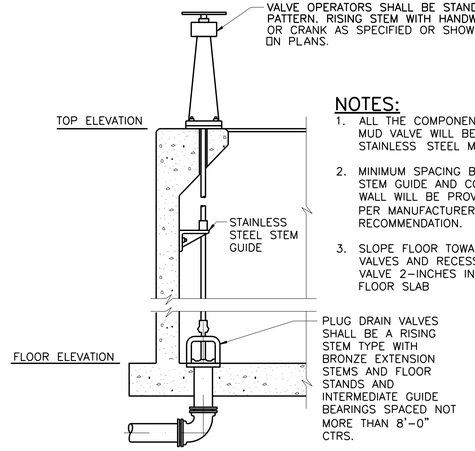

NOTES:

1. ALL THE COMPONENTS OF THE MUD VALVE WILL BE MADE OF STAINLESS STEEL MATERIALS.
2. MINIMUM SPACING BETWEEN STEM GUIDE AND CONCRETE WALL WILL BE PROVIDED AS PER MANUFACTURER'S RECOMMENDATION.
3. SLOPE FLOOR TOWARDS DRAIN VALVES AND RECESS LIP OF VALVE 2-INCHES INTO THE FLOOR SLAB

373 MUD VALVE
NOT TO SCALE

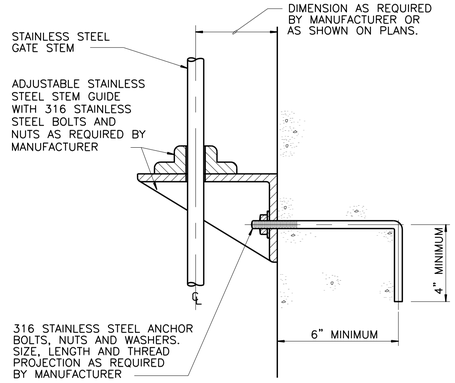

374 STEM GUIDE INSTALLATION
NOT TO SCALE

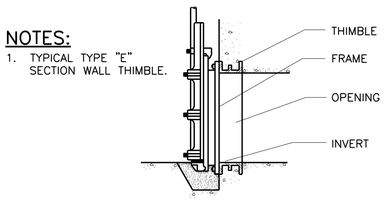

NOTES:

1. TYPICAL TYPE "E" SECTION WALL THIMBLE.

FLUSH BOTTOM SEAL
(FOR NEW STRUCTURE)

371 BOTTOM SEAL
NOT TO SCALE

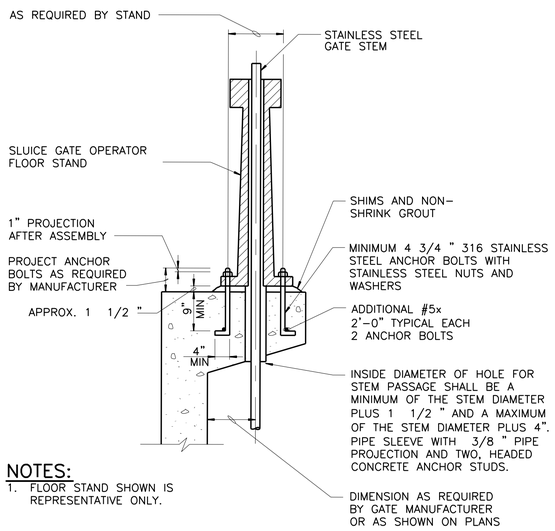

NOTES:

1. FLOOR STAND SHOWN IS REPRESENTATIVE ONLY.

375 FLOOR STAND INSTALLATION
NOT TO SCALE

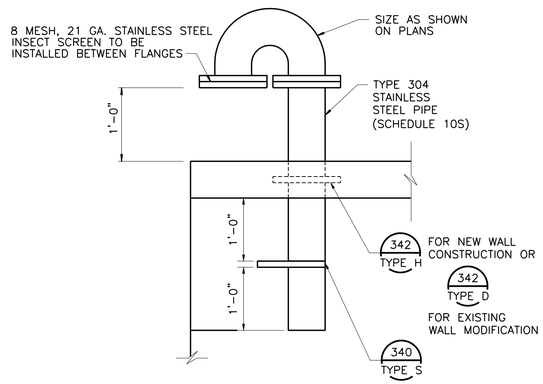

377 AIR VENT DETAIL
NOT TO SCALE

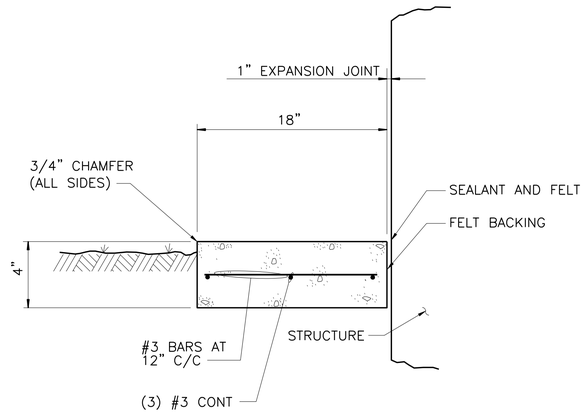

NOTES:

1. MOW STRIP SHALL BE PLACED AGAINST ALL NEW STRUCTURES WHERE THERE IS LESS THAN 5' OF CLEARANCE EXCEPT WHERE SIDEWALKS OR DRIVEWAYS ARE SHOWN.
2. WHERE EVER A YARD HYDRANT (SD329) IS INSTALLED ON A MOW STRIP, THE MOW STRIP WIDTH SHALL BE 24".

481 CONCRETE MOW STRIP DETAIL
NOT TO SCALE

This Record Drawing is a combination of the sealed engineering contract drawings for this project, modified by information furnished by the contractor reflecting changes in the Project made during construction. The original sealed drawings are on file at the offices of
FREESE AND NICHOLS, INC.
RECORD DRAWINGS PREPARED ON:
06/24/20

Freese and Nichols, Inc.
Texas Registered Engineering Firm F-2144

THE SEAL (IM) ORIGINALLY APPEARED ON THIS DOCUMENT WAS AUTHORIZED BY CHRIS C. GEE, P.E.
ALTERATION OF A SEALED DOCUMENT WITHOUT PROPER AUTHORIZATION AND ADDITIONAL SEAL IS A VIOLATION OF THE TEXAS ENGINEERING PRACTICE ACT

FREESE NICHOLS
4040 Broadway Street, Suite 600
San Antonio, Texas 78209-6350
Phone - (210) 829-3500
Fax - (210) 841-7401
Web - www.freese.com

CITY OF CASTROVILLE
WWTP CAPACITY EXPANSION PROJECT
STANDARD DETAILS
STANDARD MECHANICAL DETAILS #17

NO.	ISSUE	BY	DATE
	RECORD DRAWINGS	CCG	06/24/20
1	ISSUED FOR CONSTRUCTION	CCG	11/16/16

F&N JOB NO. CVL14259
DATE 6/10/16
DESIGNED CCG
DRAWN DDH
CHECKED TWS
FILE NAME mp-all-dt-typl17.dwg

VERIFY SCALE Bar is one inch on original drawing. If not one inch on this sheet, adjust scale.
0 1"

SHEET SD-17
SEQ.

ACAD Rel: 21.0s (LMS Tech)
Filename: N:\WW\Drawings\mp-all-dt-typl17.dwg
Last Saved: 10/9/2019 10:10 AM Saved By: 03576

Plot Date: 6/18/2020 5:52 PM Plot By: 90119 Filename: N:\WW\Drawings\mp-all-dt-typl17.dwg

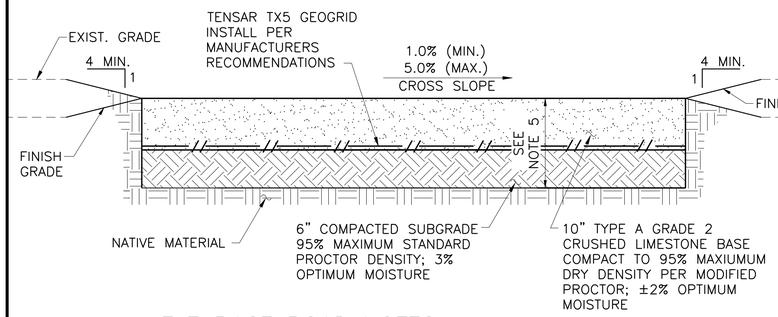

FLEXBASE ROAD NOTES:

1. CRUSHED LIMESTONE BASE MATERIALS, PLACEMENT AND TESTING SHALL CONFORM TO SPECIFICATION 32 01 29 FLEXIBLE BASE AND PAVING REPAIR. MATERIAL SHALL BE TYPE A GRADE 1 AND COMPACTED TO 95% DENSITY ASTM D1557. PLACE IN 6 INCH MAXIMUM LIFTS.
2. LIMESTONE BASE AND SUBGRADE SHALL BE CONSTRUCTED TO THE LINES AND GRADES SHOWN IN THE PLANS.
3. GEOTEXTILE SHALL BE AN APPROVED NON WOVEN MATERIAL WITH 6 OUNCE PER SQUARE YARD WEIGHT. OVERLAP EDGES OF GEOTEXTILE A MINIMUM OF 6 INCHES AND PIN IN PLACE. SEE PROJECT SPECIFICATIONS FOR ADDITIONAL REQUIREMENTS.

1 TYPICAL SECTION FLEXBASE ROAD
N.T.S.

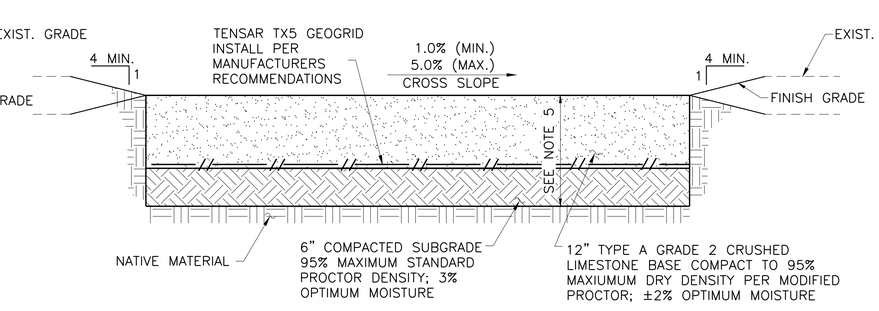

FLEXBASE ROAD NOTES (CONTINUED):

4. COMPACTED SUBGRADE SHALL BE SAND, CLAY, OR SANDY CLAY MATERIAL WHICH IS FREE FROM ORGANICS AND OTHER FOREIGN MATERIALS. PLACE IN 6 INCH MAXIMUM LIFTS AND COMPACT TO 95% DENSITY ASTM D698.
5. IN CASES WHERE ROAD EXCAVATION EXPOSES SOLID NATIVE LIMESTONE WITHIN 6" TO 12" DEPTH FROM FINISHED GRADE, CONTRACTOR MAY MODIFIY ROAD SECTION AS FOLLOWS:
   A. CLEAN SURFACE OF EXPOSED ROCK AND REMOVE ALL LOOSE DEBRIS.
   B. ELIMINATE INSTALLATION OF SUBGRADE LAYER AND TENSAR TX5 GEOGRID.
   C. INSTALL MINIMUM 6" TO 12" COMPACTED CRUSHED LIMESTONE BASE DOWN TO THE EXPOSED ROCK SURFACE IN ACCORDANCE WITH THE PLAN DETAILS AND SPECIFICATIONS.

2 HEAVY DUTY TYPICAL SECTION FLEXBASE ROAD
N.T.S.

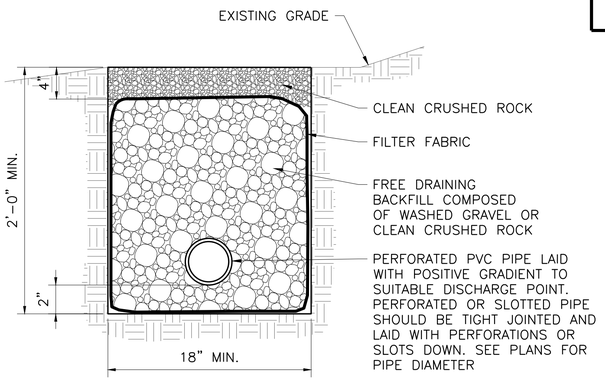

3 TRENCH DRAIN DETAIL
NTS

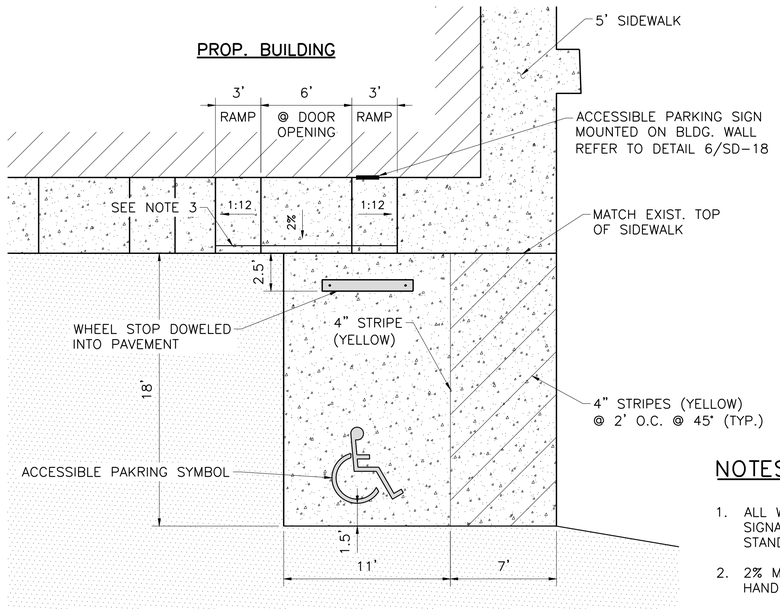

NOTES:

1. ALL WALKWAYS, RAMPS, HANDICAP PARKING, SIGNAGE, ETC...SHALL MEET APPROVED ADA STANDARDS.
2. 2% MAX. SLOPE IN ALL DIRECTIONS IN AREA OF HANDICAP PARKING SPACES.
3. PROVIDE MIN. 4" TALL CURB ALONG RAMP AND LANDING EDGE THAT COMPLIES WITH APPROVED ADA STANDARDS.

4 HANDICAP PARKING/RAMP DETAIL
1"=5'

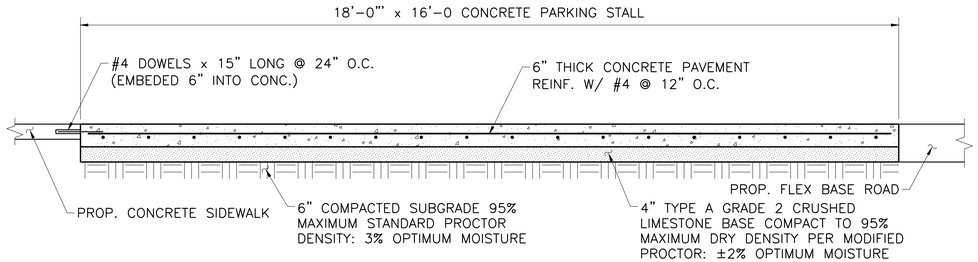

5 TYPICAL CONCRETE PAVEMENT @ HANDICAP PARKING STALL
1"=20'

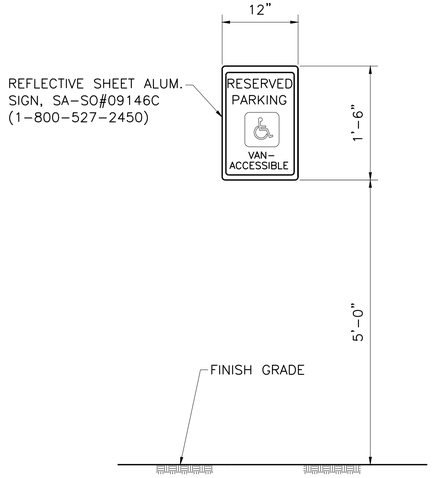

6 HANDICAP PARKING SIGNAGE
3/4"=1'-0"

This Record Drawing is a combination of the sealed engineering contract drawings for this project, modified by information furnished by the contractor reflecting changes in the Project made during construction. The original sealed drawings are on file at the offices of
FREESE AND NICHOLS, INC.
RECORD DRAWINGS PREPARED ON:
06/24/20

THE SEAL (NA) ORIGINALLY APPEARED ON THIS DOCUMENT WAS AUTHORIZED BY KORY A. CAPPS, P.E. ON (NA)
ALTERATION OF A SEALED DOCUMENT WITHOUT PROPER AUTHORIZATION AND SPECIFIC DESCRIPTION OF THE ALTERATION MAY BE A VIOLATION OF THE TEXAS ENGINEERING PRACTICE ACT

Freese and Nichols, Inc.
Texas Registered Engineering Firm F-2144

FREESE NICHOLS
4040 Broadway Street, Suite 600
San Antonio, Texas 78209-6350
Phone - (210) 829-5800
Fax - (210) 841-7401
Web - www.freese.com

CITY OF CASTROVILLE
WWTP CAPACITY EXPANSION PROJECT
STANDARD DETAILS
STANDARD MECHANICAL DETAILS #18

F&N JOB NO.	CVL14259		
DATE	6/10/16		
DESIGNED	FNI	BY	
DRAWN	NC	CCG	06/24/20
REVISED		CCG	11/16/16
CHECKED	DTB		
FILE NAME	UT-CVL-DT-MISC01.dwg		

NO. ISSUE
1 RECORD DRAWINGS
2 ISSUED FOR CONSTRUCTION

VERIFY SCALE Bar is one inch on original drawing. If not one inch on this sheet, adjust scale.
0" 1"

SHEET SD-18
SEQ.

ACAD Rel: 21.0s (LMS Tech)
Filename: N:\WW\Drawings\UT-CVL-DT-MISC01.dwg
Last Saved: 10/9/2019 10:15 AM Saved By: 03576

Plot Date: 6/18/2020 5:52 PM Plot By: 90119 Filename: N:\WW\Drawings\UT-CVL-DT-MISC01.dwg

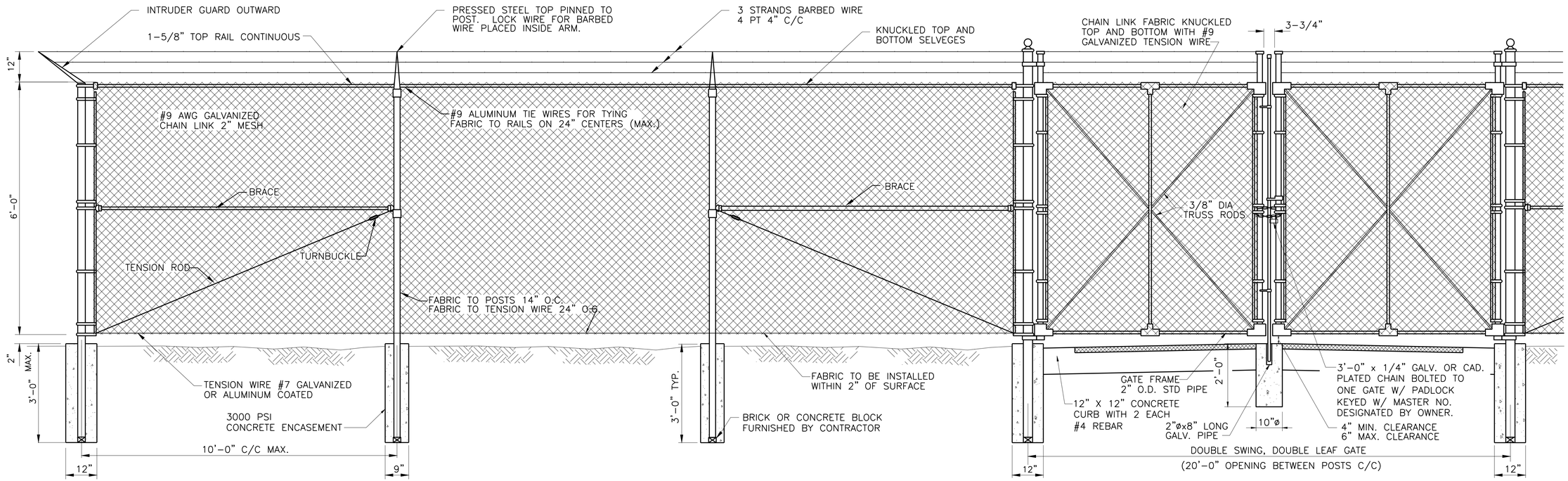

END POST
(OR CORNER)
2-7/8" O.D. STD PIPE

LINE POST
2-3/8" O.D. STD PIPE

TYPICAL POST EMBEDMENT

GATE POST
4" O.D. STD PIPE

1 ELEVATION OF CHAIN LINK FENCE AND GATES
N.T.S.

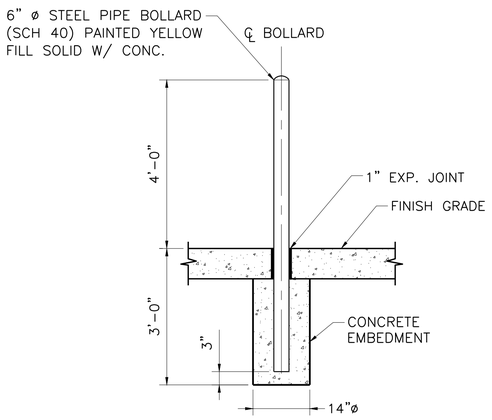

2 EMBEDDED BOLLARD DETAIL
N.T.S.

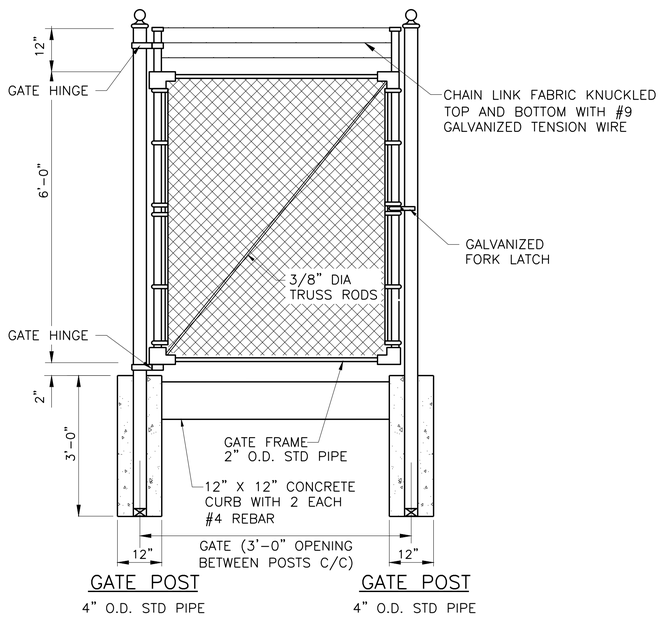

3 ELEVATION OF CHAIN LINK MAN GATE
N.T.S.

CHAIN LINK FENCE AND GATE NOTES:

1. ALL CHAIN LINK FENCE METAL PARTS SHALL BE HOT DIP GALVANIZED AFTER FABRICATION.
2. FENCES AND GATES SHALL BE FURNISHED COMPLETE WITH ALL NECESSARY FITTINGS AND HARDWARE.
3. FOR GATES, SIZES OF PIPE, SAG RODS AND TURNBUCKLES SHALL BE MANUFACTURER'S STANDARD WHICH ALSO MEET THE REQUIREMENTS OF THIS DRAWING.
4. POSTS SHALL BE ROLLED OR EXTRUDED SECTIONS OR TUBING OF STEEL OR ALUMINUM CAPABLE OF WITHSTANDING A LATERAL FORCE OF 100 POUNDS APPLIED AT THE TOP. ALL HOLLOW POSTS SHALL BE CAPPED.
5. STANDARD PIPE SIZES INDICATED ARE NOMINAL DIAMETER, SCHEDULE 40, PER AMERICAN STANDARDS ASSOCIATION (ASA) B 36.10.
6. PROVIDE PLUNGE ROD AND CATCHES FOR ALL GATES IN OPEN AND CLOSED POSITION.

This Record Drawing is a combination of the sealed engineering contract drawings for this project, modified by information furnished by the contractor reflecting changes in the Project made during construction. The original sealed drawings are on file at the offices of
FREESE AND NICHOLS, INC.
RECORD DRAWINGS PREPARED ON:
06/24/20

Freese and Nichols, Inc.
Texas Registered Engineering Firm F-2144

THE SEAL HAS ORIGINALLY APPEARED ON THIS DOCUMENT WAS AUTHORIZED BY _____ ON _____
NO ALTERATION OF A SEALED DOCUMENT WITHOUT PROPER AUTHORIZATION AND ADDITIONAL SEAL IS A VIOLATION OF THE TEXAS ENGINEERING PRACTICE ACT

FREESE NICHOLS
4040 Broadway Street, Suite 600
San Antonio, Texas 78209-6350
Phone (210) 829-3800
Fax (210) 286-8901
Web - www.freese.com

CITY OF CASTROVILLE
WWTP CAPACITY EXPANSION PROJECT
STANDARD DETAILS
STANDARD MECHANICAL DETAILS #19

NO.	ISSUE	BY	DATE
1	RECORD DRAWINGS	CCG	06/24/20
0	ISSUED FOR CONSTRUCTION	CCG	11/16/16

VERIFY SCALE Bar is one inch on original drawing. If not one inch on this sheet, adjust scale.

FAN JOB NO.	DATE	DESIGNED	DRAWN	CHECKED
CVL14259	6/10/16	FN	KV	CCG

FILE NAME UT-CVL-DT-MISC01.dwg

SHEET SD-19
SEQ.

ACAD Rel: 21.0s (LMS Tech)
Filename: N:\WW\Drawings\UT-CVL-DT-MISC01.dwg
Last Saved: 10/9/2019 10:15 AM Saved By: 03576
Plot Date: 6/18/2020 5:52 PM Plot By: 90119 Filename: N:\WW\Drawings\UT-CVL-DT-MISC01.dwg

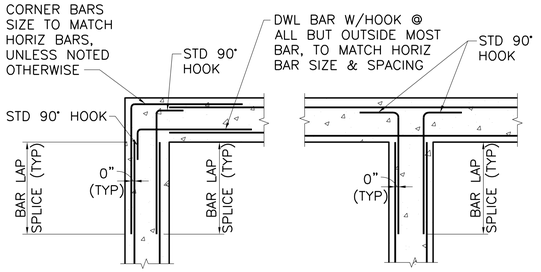

DETAIL NOTES:
1. REINFORCING SHOWN APPLIES TO ALL TOP, BOTTOM AND SIDE BARS. ALL REQUIRED BARS AR NOT SHOWN IN DETAIL.
2. AT CONTRACTOR'S OPTION, UNLESS NOTED OTHERWISE, ELIMINATE DOWELS AND CORNER BAR AND TERMINATE HORIZONTAL BARS WITH STANDARD HOOKS.

1 CORNER & INTERSECTION REINFORCEMENT
NOT TO SCALE

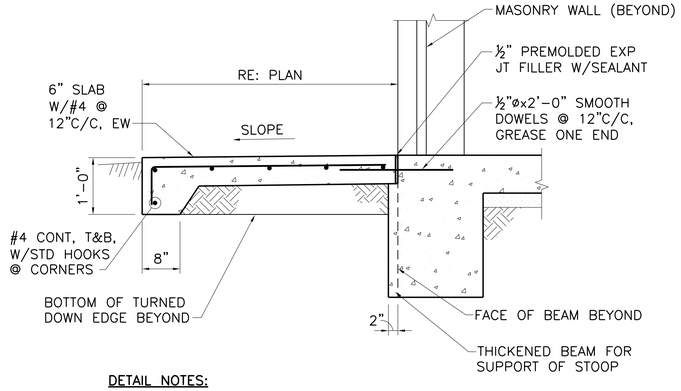

DETAIL NOTES:
1. REFER TO 1/____ FOR ADDITIONAL NOTES.
2. EXTEND LIMITS OF EXCAVATION 1'-0" BEYOND STOOP.

2 STOOP SECTION
NOT TO SCALE

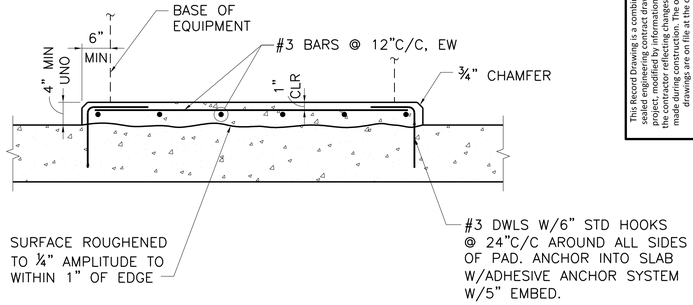

3 EQUIPMENT PAD
NOT TO SCALE

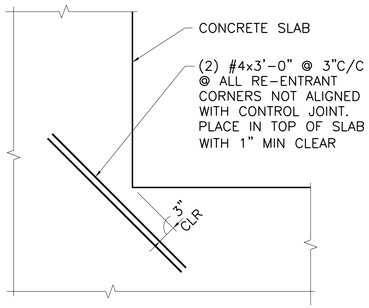

4 TYPICAL SLAB AT CORNER REINFORCING
NOT TO SCALE

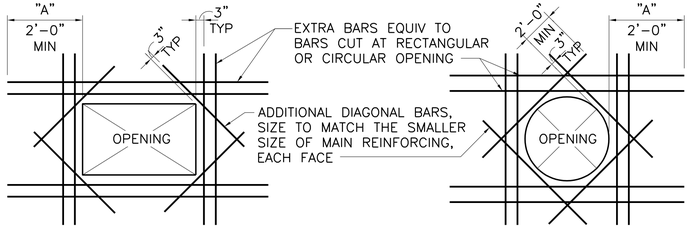

NOTES:
1. DISCONTINUE TYPICAL REINFORCING AT OPENING.
2. PLACE ADDITIONAL BARS IN SAME ORIENTATION AND POSITION AS BARS CUT BY OPENING. PROVIDE ONE SET OF BARS FOR EACH LAYER OF REINFORCING CUT.
3. "A" = TOP BAR EMBEDMENT LENGTH (24" MINIMUM). PROVIDE STANDARD HOOK IF FULL EMBEDMENT LENGTH IS NOT POSSIBLE.
4. REINFORCING STEEL IS TO BE CARRIED ACROSS ALL CONSTRUCTION JOINTS.
5. SEE MECHANICAL AND ARCHITECTURAL DRAWINGS FOR SLAB AND WALL OPENINGS NOT SHOWN ON STRUCTURAL DRAWINGS.
6. ADDITIONAL REINFORCING MAY BE OMITTED ONLY WHERE OPENING IS FRAMED BY BEAMS OR WALLS.
7. ADDITIONAL REINFORCING NOT REQUIRED WHEN SPECIFIED REINFORCING IS NOT CUT.
8. ALL REINFORCING SPACING SHALL BE GREATER THAN 3" CENTER TO CENTER.

5 TYPICAL WALL OR SLAB OPENING ADDITIONAL REINFORCEMENT
NOT TO SCALE

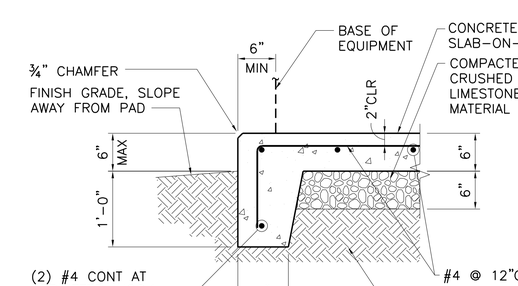

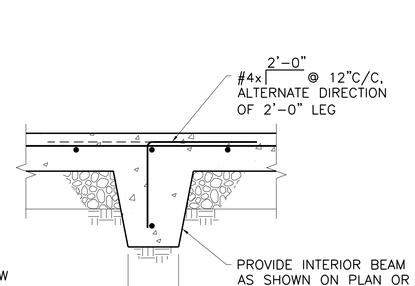

6 TYPICAL EXTERIOR EQUIPMENT PAD
NOT TO SCALE

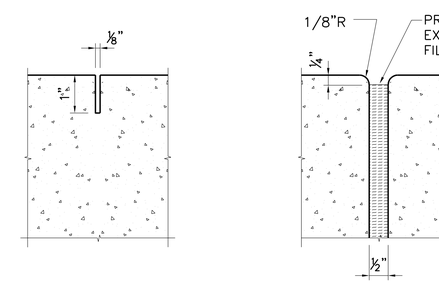

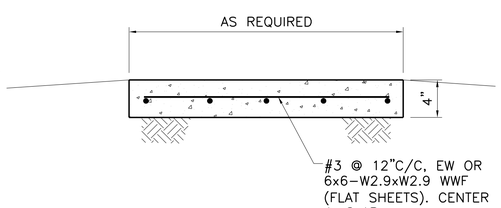

DETAIL NOTES:
1. PROVIDE TRANSVERSE CONTRACTION JOINTS AT INTERVALS NOT EXCEEDING 5'-0" ON CENTER. PROVIDE CENTERLINE CONTRACTION JOINTS IN SIDEWALKS WIDER THAT 8'-0". SPACING OF CENTERLINE CONTRACTION JOINTS SHALL NOT EXCEED 6'-0".
2. PROVIDE EXPANSION JOINTS AT INTERVALS NOT EXCEEDING 40'-0" ON CENTER WHERE WALK DOES NOT ABUT CURB.

7 SIDEWALK DETAILS
NOT TO SCALE

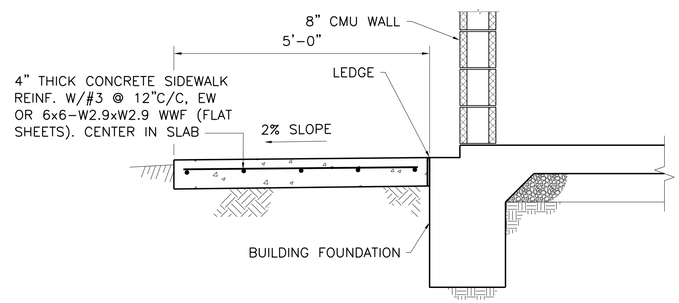

8 TYPICAL SIDEWALK ADJACENT TO ADMINISTRATION/CHLORINE BUILDING
NOT TO SCALE

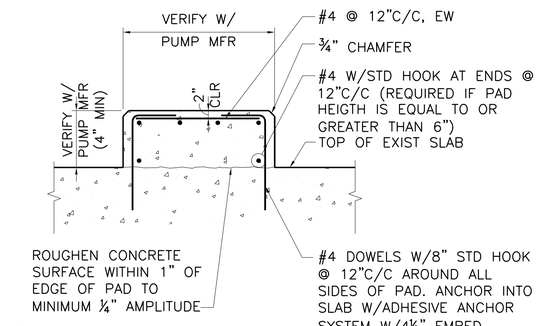

NOTES:
1. ANCHOR BOLTS SHALL BE SIZED AND EMBEDDED PER EQUIPMENT MANUFACTURER'S RECOMMENDATIONS. PROVIDE MINIMUM 3" CLEAR COVER TO ANCHOR BOLTS.
2. ALL PENETRATIONS FOR CONDUIT AND PIPING SHALL BE WITHIN CONCRETE EQUIPMENT PAD. PAD TO BE CONFIGURED ACCORDINGLY. PIPE AND CONDUIT SHALL BE LOCATED WITHIN INSIDE OF REINFORCING.

9 PUMP PAD DETAIL
NOT TO SCALE

This Record Drawing is a combination of the sealed engineering contract drawings for this project, modified by information furnished by the contractor reflecting changes in the Project made during construction. The original sealed drawings are on file at the offices of FREESE AND NICHOLS, INC.
RECORD DRAWINGS PREPARED ON: 6/24/2020

Freese and Nichols, Inc.
Texas Registered Engineering Firm F-2144

THE SEAL APPEARING ON THIS DOCUMENT WAS AUTHORIZED BY JUSTIN A. WEBB, P.E. TEXAS NO. 122201 ON: 6/24/2020
IT IS A VIOLATION OF LAW FOR ANY PERSON, UNLESS ACTING UNDER THE DIRECTION OF THE RESPONSIBLE ENGINEER, TO ALTER THIS DOCUMENT IN ANY WAY. FOR ANY REVISION TO A SEALED DOCUMENT, NOTIFICATION OF THE RESPONSIBLE ENGINEER AND DESIGNATION OF THE REVISED PORTION IS REQUIRED BY THE TEXAS ENGINEERING PRACTICE ACT.

FREESE NICHOLS
4040 Broadway Street, Suite 600
San Antonio, Texas 78209-6350
Phone - (210) 829-3800
Fax - (210) 298-1801
Web - www.freese.com

CITY OF CASTROVILLE
WWTP CAPACITY EXPANSION PROJECT
STRUCTURAL
STANDARD DETAILS
STRUCTURAL DETAILS #1

NO.	ISSUE	BY	DATE
	RECORD DRAWING	MRR	06/24/20
1	ISSUED FOR CONSTRUCTION	MRR	11/16/16

F&N JOB NO. CVL14259
DATE 6/10/16
DESIGNED MRR
DRAWN JAW
CHECKED AD
FILE NAME ST-CVL-DT-TYPL01.dwg

VERIFY SCALE Bar is one inch on original drawing. If not one inch on this sheet, adjust scale.
0 1"

SHEET SD-20
SEQ. 111

ACAD Rel: 21.0s (LMS Tech)
Filename: N:\ST\ST-CVL-DT-TYPL01.dwg
Last Saved: 6/18/2020 11:04 AM Saved By: 02198
Plot Date: 6/18/2020 11:20 AM Plot By: 02198 Filename: N:\ST\ST-CVL-DT-TYPL01.dwg

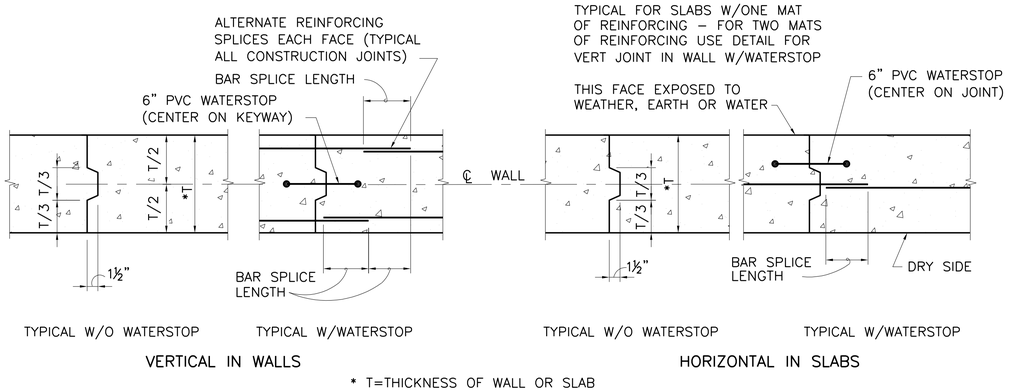

* T=THICKNESS OF WALL OR SLAB

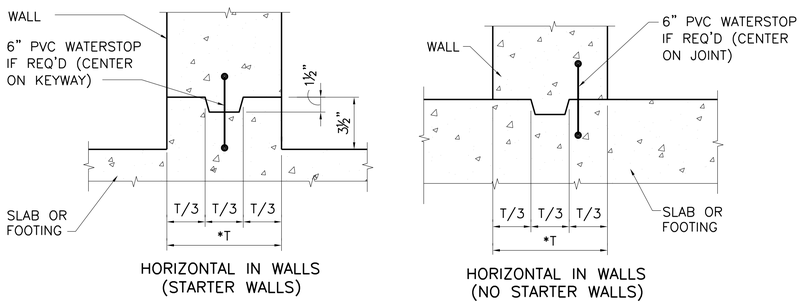

1 – CONSTRUCTION JOINT DETAILS

NOT TO SCALE

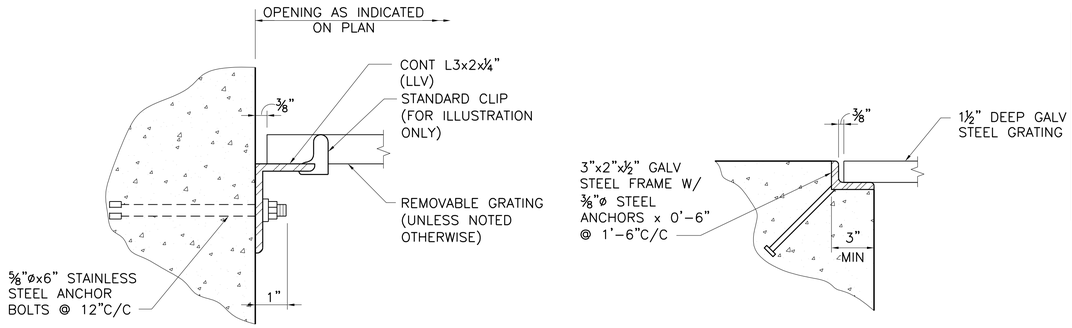

2 – GALVANIZED STEEL GRATING SUPPORT DETAILS

NOT TO SCALE

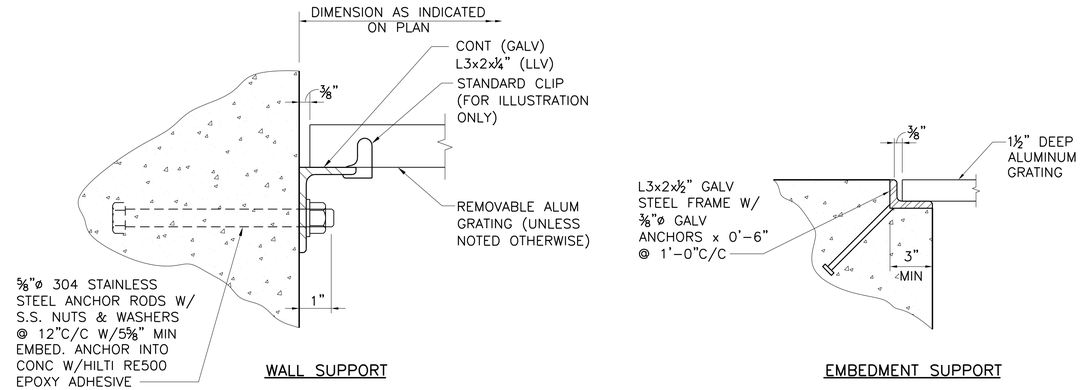

3 – ALUMINUM GRATING SUPPORT DETAIL

NOT TO SCALE

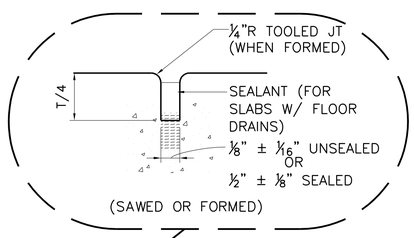

NOTES:
1. REFER TO PLAN FOR SLAB CONTROL JOINT LOCATIONS. IF NOT SHOWN ON DRAWINGS MAX SPACING SHALL BE 15'-0".
2. SAW JOINTS WITHIN 1 HOUR OF COMPLETION OF FINISHING OPERATIONS WITH EARLY-ENTRY ROLLER SAW.

4 – SLAB SAW CUT CONTROL JOINT (SJ)

NOT TO SCALE

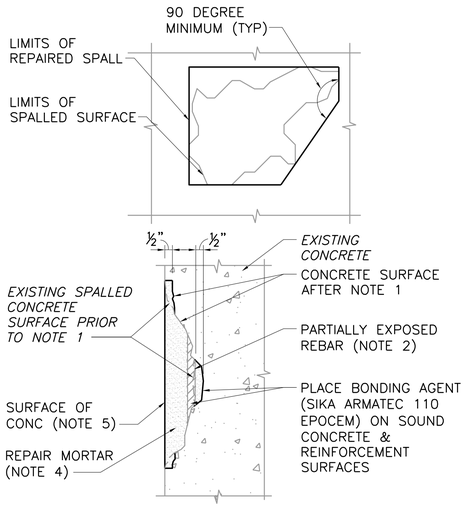

5 – TYPICAL CONCRETE SPALL & CRACK REPAIR

NOT TO SCALE

DETAIL NOTE:
1. SAW CUT PERIMETER OF SPALLED AREA. REMOVE CONCRETE WITHIN CUT PERIMETER AS REQUIRED TO PROVIDE A ½" MINIMUM REPAIR DEPTH. REMOVE ALL UNSOUND CONCRETE. CLEAN REBAR OF CORROSION AND CONTAMINATES USING MECHANICAL MEANS.
2. IF ANY REBAR HAS MORE THAN HALF ITS CROSS-SECTION EXPOSED, THEN REMOVE CONCRETE FROM AROUND THE BAR TO A MINIMUM DEPTH OF ½".
3. CRACKS IN SOUND CONCRETE, THAT EXTEND OUT FROM THE SPALLED AREA TO BE REPAIRED, SHALL BE PRESSURE INJECTED WITH HIGH STRENGTH, LOW VISCOSITY EPOXY. USE SIKADUR 35, HI-MOD LV, BY SIKA CORPORATION. PROVIDE SUPPORT PRODUCTS AND CRACK PREPARATION AS RECOMMENDED BY MANUFACTURER.
4. REPAIR MORTAR SHALL BE SIKATOP 122 PLUS (FOR HORIZONTAL SURFACES) OR SIKATOP 123 PLUS (FOR VERTICAL AND OVERHEAD SURFACES), BY SIKA CORPORATION. PREPARE, INSTALL IN MULTIPLE LIFTS AS REQUIRED, FINISH, AND CURE AS RECOMMENDED BY MANUFACTURER.
5. FINISHED SURFACE TEXTURE SHALL MATCH EXISTING FINISH TEXTURE.

This Record Drawing is a combination of the sealed engineering contract drawings for this project, modified by information furnished by the contractor reflecting changes in the Project made during construction. The original sealed drawings are on file at the offices of FREESE AND NICHOLS, INC.
RECORD DRAWINGS PREPARED ON: 6/24/2020

Freese and Nichols, Inc.
Texas Registered Engineering Firm F-2144

THE SEAL APPEARING ON THIS DOCUMENT WAS AUTHORIZED BY JOSHUA D. MCCUTCHEON, P.E. TEXAS NO. 122201 DATE: 6/24/2020
IT IS A VIOLATION OF LAW FOR ANY PERSON, UNLESS ACTING UNDER THE DIRECTION OF A LICENSED ENGINEER, TO ALTER THIS DOCUMENT IN ANY WAY. IT IS A VIOLATION OF THE RESPONSIBLE CHARGE RULES FOR A LICENSED ENGINEER TO SEAL DOCUMENTS NOT PREPARED BY HIM/HER OR UNDER HIS/HER DIRECT SUPERVISION. IT IS A VIOLATION OF THE TEXAS ENGINEERING PRACTICE ACT TO PERFORM ENGINEERING SERVICES THAT ARE NOT SUPERVISED BY A LICENSED ENGINEER.

FREESE NICHOLS
4040 Broadway, Street, Suite 600
San Antonio, Texas 78209-6350
Phone - (210) 298-3800
Fax - (210) 298-3801
Web - www.freese.com

CITY OF CASTROVILLE

WWTP CAPACITY EXPANSION PROJECT

STRUCTURAL

STANDARD DETAILS

STRUCTURAL DETAILS #2

NO.	ISSUE	BY	DATE
2	RECORD DRAWING	MRR	06/24/20
1	ISSUED FOR CONSTRUCTION	MRR	11/16/16

FAN JOB NO. CVL14259
DATE 6/10/16
DESIGNED MRR
DRAWN JLM
REVISED -
CHECKED AD
FILE NAME ST-CVL-DT-TYPL04.dwg

VERIFY SCALE Bar is one inch on original drawing. If not one inch on this sheet, adjust scale.
0 1"

SHEET SD-21
SEQ. 112

ACAD Rel: 21.0s (LMS Tech)
Filename: N:\ST\ST-CVL-DT-TYPL04.dwg
Last Saved: 6/18/2020 11:05 AM Saved By: 02198
Plot Date: 6/18/2020 11:20 AM Plot By: 02198 Filename: N:\ST\ST-CVL-DT-TYPL04.dwg

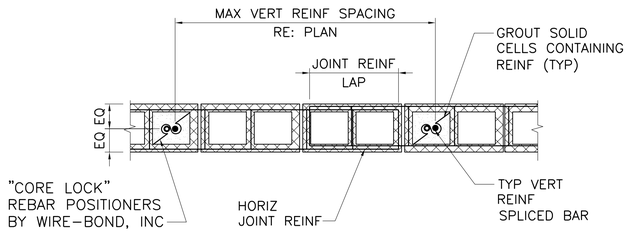

DETAIL NOTES:
1. MAINTAIN MINIMUM 3"x3" CLEAR UNOBSTRUCTED CONTINUOUS VERTICAL CELL AT EACH REBAR. PLACE WALLS TO MAXIMUM 5'-0" HEIGHT BEFORE GROUTING.
2. PLACE REBAR IN WALL WITH LAP SPLICE LENGTH PER SCHEDULE.
3. STOP GROUT POUR 1½" BELOW TOP OF COURSE, AT EACH GROUT LIFT, EXCEPT AT LINTELS AND BOND BEAMS EXTEND GROUT TO TOP OF GROUTED COURSE.
4. PROVIDE REBAR POSITIONERS AT MANUFACTURER RECOMMENDED SPACING, BUT NOT TO EXCEED 48"C/C.

1 — TYPICAL 8" CMU WALL REINFORCING DETAIL
NOT TO SCALE

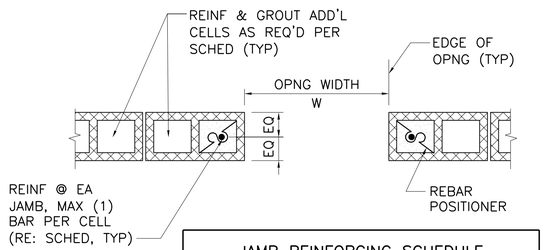

JAMB REINFORCING SCHEDULE		
W	CHLORINE BLDG	ADMIN BLDG
2'-8"	(1) #4	(1) #5
4'-8"	(2) #4	(2) #5
6'-0"	(2) #4	(2) #5

2 — TYPICAL 8" CMU JAMB DETAIL
NOT TO SCALE

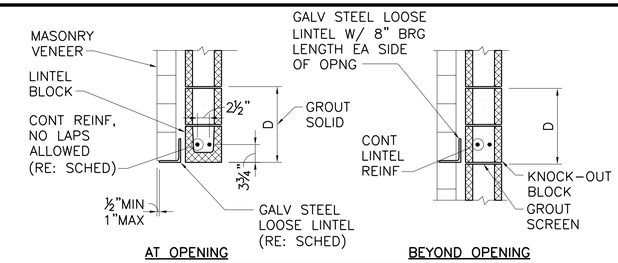

AT OPENING — BEYOND OPENING

LINTEL REINFORCING SCHEDULE			
W	D	REINF	LOOSE LINTEL
2'-8"	8"	(2) #4	
4'-8"	8"	(2) #4	
6'-0"	16"	(2) #4	

W = CLEAR WIDTH OF CMU OPENING.

DETAIL NOTES:
1. LOOSE LINTEL ONLY REQUIRED WHEN MASONRY VENEER IS PRESENT.

3 — TYPICAL 8" CMU LINTEL DETAIL
NOT TO SCALE

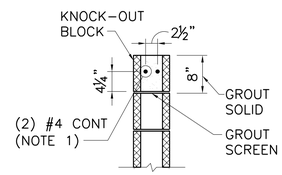

DETAIL NOTES:
1. LAP SPLICE REINFORCING AS REQUIRED. STAGGER LAP SPLICES.

4 — TYPICAL 8" CMU BOND BEAM
NOT TO SCALE

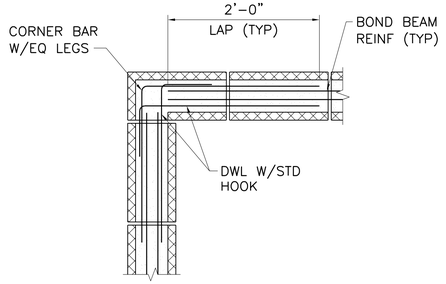

DETAIL NOTES:
1. CORNER BAR AND DOWELS SHALL MATCH SIZE OF TYPICAL BOND BEAM REINFORCING.

5 — TYPICAL BOND BEAM CORNER REINFORCEMENT
NOT TO SCALE

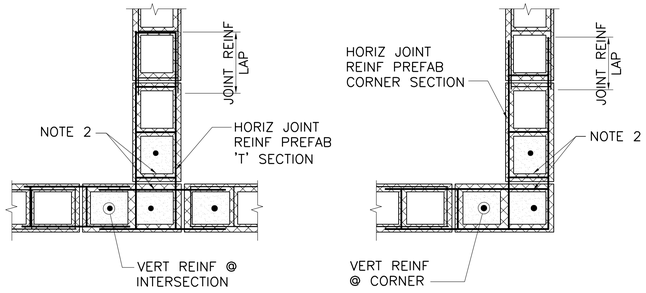

DETAIL NOTES:
1. INTERSECTING WALL CMU BLOCKS SHALL BE INTERLOCKED WITH INTERSECTED CMU WALL, UNLESS SPECIFICALLY NOTED AS A CONTROL OR EXPANSION JOINT.
2. AT CONTRACTORS OPTION, IN LIEU OF INTERLOCKING CMU COURSING, REMOVE WEB AND FACE SHELL AT INTERFACE AND GROUT MONOLITHICALLY.

6 — 8" CMU WALL CORNER REINFORCING DETAIL
NOT TO SCALE

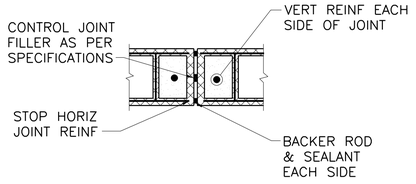

SECTION ABOVE & BELOW BOND BEAMS & LINTELS

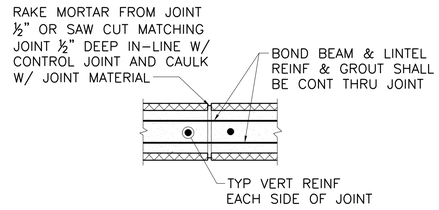

SECTION AT BOND BEAMS & LINTELS

DETAIL NOTES:
1. REFER TO PLAN FOR CMU CONTROL JOINT LOCATIONS.

7 — CMU CONTROL JOINT DETAIL
NOT TO SCALE

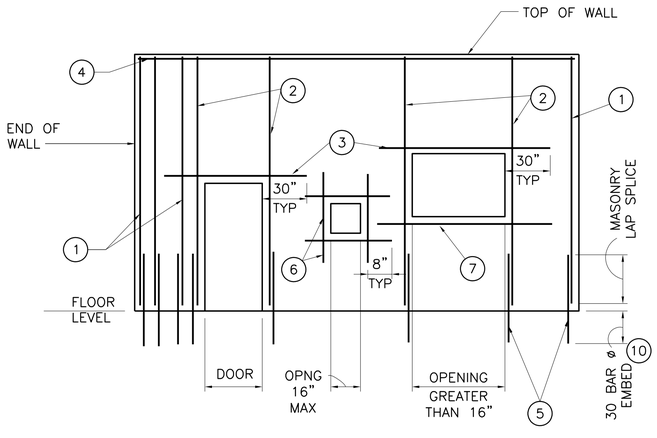

8 — TYPICAL REINFORCED CMU WALL ELEVATION
NOT TO SCALE

1. TYPICAL WALL REINFORCEMENT WITH ADDITIONAL REINFORCEMENT AT CORNERS AND INTERSECTIONS.
2. JAMB REINFORCEMENT. SEE JAMB DETAIL.
3. LINTEL REINFORCEMENT. SEE LINTEL DETAIL.
4. BOND BEAM REINFORCEMENT. SEE BOND BEAM DETAIL.
5. DOWEL SIZE AND QUANTITY TO MATCH VERTICAL REINFORCEMENT WITH REQUIRED LAP SPLICE.
6. (1) #4 EACH SIDE, TOP & BOTTOM.
7. SILL REINFORCEMENT: (2)#4 SIMILAR TO BOND BEAM.
8. ALL CELLS WITH REINFORCING SHALL BE SOLIDLY GROUTED.
9. ALL COURSES WITH REINFORCING SHALL BE SOLIDLY GROUTED, PROVIDE GROUT SCREEN AS REQUIRED.
10. EPOXY SHALL BE HILTI RE 500 SD. INSTALL PER MANUFACTURER INSTRUCTIONS.

ACI 530 MASONRY LAP SPLICE LENGTHS f'm=1500 psi, fy=60000 psi	
W	LAP
#3	18"
#4	24"
#5	30"
#6	44"
#7	60"

9 — MASONRY LAP SPLICE SCHEDULE
NOT TO SCALE

This Record Drawing is a combination of the sealed engineering contract drawings for this project, modified by information furnished by the contractor reflecting changes in the Project made during construction. The original sealed drawings are on file at the offices of FREESE AND NICHOLS, INC.
RECORD DRAWINGS PREPARED ON: 6/24/2020

Freese and Nichols, Inc.
Texas Registered Engineering Firm F-2144

THE SEAL APPEARING ON THIS DOCUMENT WAS AUTHORIZED BY ANDREW DOPPLER, P.E. TEXAS NO. 122021 DATE: 6/24/2020
IT IS A VIOLATION OF LAW FOR ANY PERSON, UNLESS ACTING UNDER THE DIRECTION OF THE RESPONSIBLE ENGINEER, TO ALTER THIS DOCUMENT IN ANY WAY. COPYRIGHT FREESE AND NICHOLS, INC. 2020
ALL RIGHTS RESERVED. THESE PLANS ARE NOT TO BE USED IN WHOLE OR IN PART FOR ANY PROJECT OTHER THAN THE ONE FOR WHICH THEY ARE SPECIFICALLY PREPARED AND PUBLISHED WITHOUT THE PRIOR WRITTEN AUTHORIZATION OF FREESE AND NICHOLS, INC. UNAUTHORIZED USE OF THESE PLANS AND SPECIFICATIONS SHALL BE AT THE USER'S SOLE RISK AND WITHOUT LIABILITY TO FREESE AND NICHOLS, INC.

FREESE NICHOLS
4040 Broadway Street, Suite 600
San Antonio, Texas 78209-6350
Phone - (210) 829-3800
Fax - (210) 298-3801
Web - www.freese.com

CITY OF CASTROVILLE
WWTP CAPACITY EXPANSION PROJECT
STRUCTURAL
STANDARD DETAILS
STANDARD STRUCTURAL DETAILS #3

NO.	ISSUE	BY	DATE
1	RECORD DRAWING	MRR	06/24/20
0	ISSUED FOR CONSTRUCTION	MRR	11/16/16

VERIFY SCALE Bar is one inch on original drawing. If not one inch on this sheet, adjust scale.
0 1"

F&N JOB NO. CVL14259
DATE 6/10/16
DESIGNED MRR
DRAWN JLM
CHECKED AD
FILE NAME ST-CVL-DT-TYPL02.dwg

SHEET SD-22
SEQ. 113

ACAD Rel: 21.0s (LMS Tech)
Filename: N:\ST\ST-CVL-DT-TYPL02.dwg
Last Saved: 6/18/2020 11:05 AM Saved By: 02198

Plot Date: 6/18/2020 11:21 AM Plot By: 02198 Filename: N:\ST\ST-CVL-DT-TYPL02.dwg

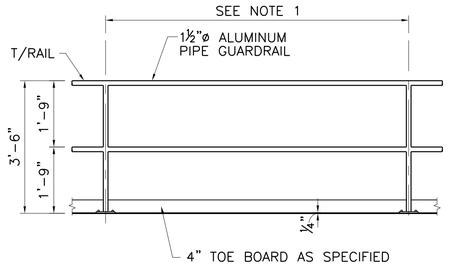

NOTES:
1. POST SPACING SHALL NOT EXCEED MAXIMUM SPACING REQUIRED BY LOCAL OR STATE CODES, OR OSHA REQUIREMENTS, OR 8'-0" CENTERS, WHICHEVER IS LEAST. GUARDRAIL POSTS AT STAIRS SHALL BE SPACED AS REQUIRED TO PRODUCE WITH UNIFORM SPACING BETWEEN POSTS.
2. PROVIDE EXPANSION JOINTS AT MAXIMUM 30'-0" INTERVALS OR AS RECOMMENDED BY MANUFACTURER, WHICHEVER IS LESSER ALONG RAILS AND TOE BOARDS.
3. NOTCH TOE BOARD AT GUARDRAIL POSTS TO CLEAR POST BASE PLATE.

1 / – GUARDRAIL DETAIL
NOT TO SCALE

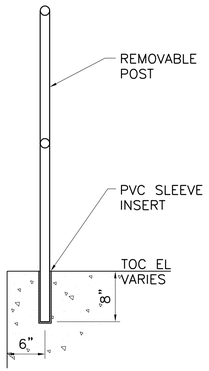

NOTE:
REFER TO 3/SD-23 FOR ADDITIONAL INFORMATION.

2 / – REMOVABLE HANDRAIL DETAIL
NOT TO SCALE

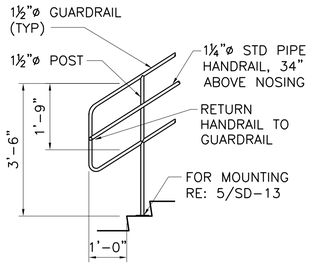

TYPICAL STAIR END (BOTTOM)

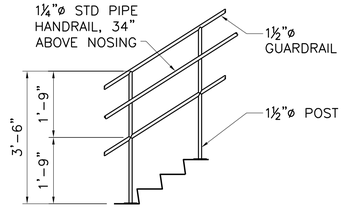

TYPICAL STAIR

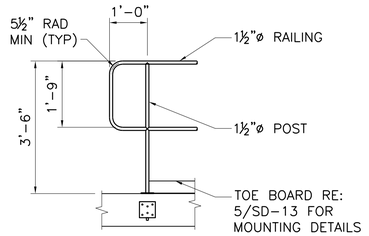

TYPICAL RAILING END

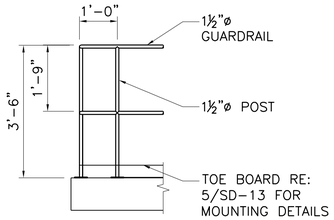

TYPICAL RAILING CORNER

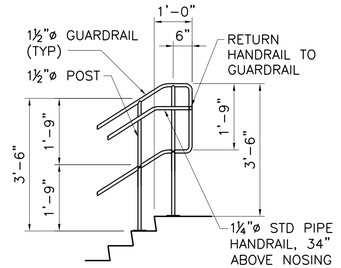

TYPICAL STAIR END

NOTE:
MAXIMUM POST SPACING IS 8'-0".

3 / – TYPICAL ALUMINUM RAILING DETAILS
NOT TO SCALE

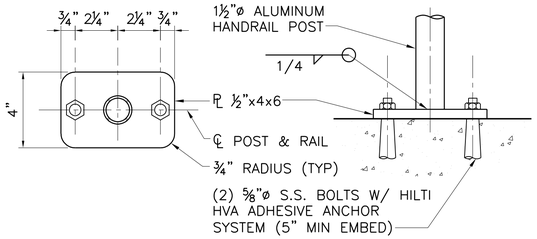

DETAIL NOTE:
1. BASE PL MATERIAL SHALL MATCH HANDRAIL.

PLAN ELEVATION

FLOOR MOUNTED

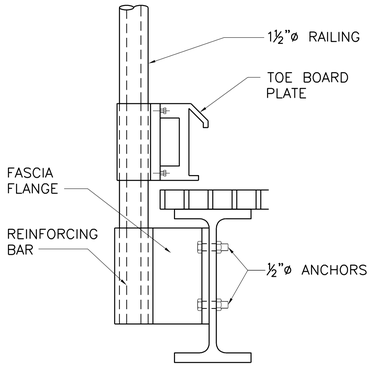

AT BEAM

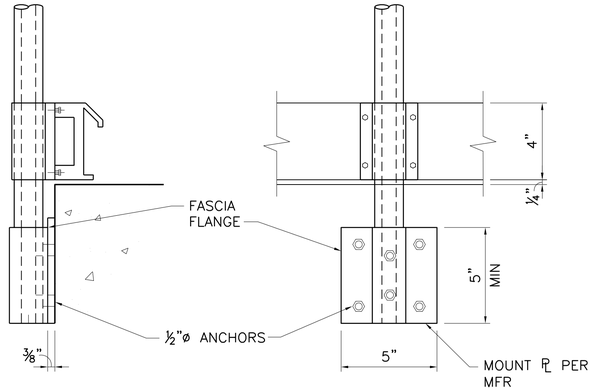

SIDE MOUNT DETAIL

DETAIL NOTE:
1. ALL ANCHORS, BOLTS, NUTS, AND CONNECTIONS SHALL BE TYPE 316 STAINLESS STEEL.

5 / – TYPICAL ALUMINUM RAILING POST MOUNTING DETAILS
NOT TO SCALE

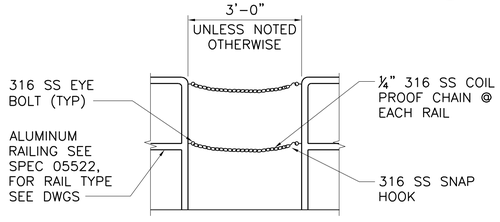

4 / – SAFETY CHAIN DETAIL
NOT TO SCALE

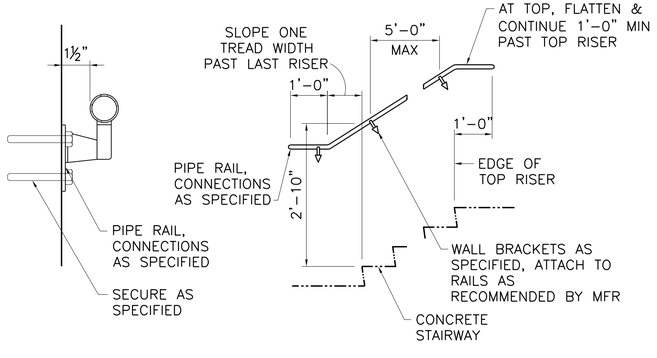

5 / – WALL MOUNTED HANDRAIL
NOT TO SCALE

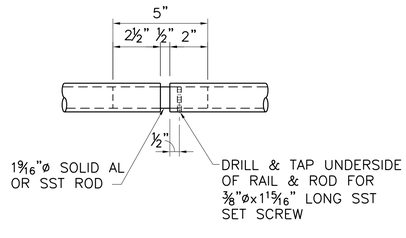

NOTE:
AT CONTRACTOR'S OPTION, HANDRAIL OR GUARDRAIL MFT STANDARD EXPANSION JT DETAIL MAY BE USED WITH WRITTEN APPROVAL IN LIEU OF DETAIL SHOWN.

6 / – RAIL EXPANSION JOINT
NOT TO SCALE

This Record Drawing is a combination of the sealed engineering contract drawings for this project, modified by information furnished by the contractor reflecting changes in the Project made during construction. The original sealed drawings are on file at the offices of
FREESE AND NICHOLS, INC.
RECORD DRAWINGS PREPARED ON:
6/24/2020

Freese and Nichols, Inc.
Texas Registered Engineering Firm F-2144

THE SEAL APPEARING ON THIS DOCUMENT WAS AUTHORIZED BY JOSEPH L. MOSER, P.E. TEXAS NO. 92201 DATE: 10/23/2020 IT IS NOT TO BE USED FOR BIDDING OR CONSTRUCTION PURPOSES. THE RESPONSIBLE ENGINEER IS NOT RESPONSIBLE FOR ANY UNAUTHORIZED MODIFICATIONS OF THE DOCUMENT.
FREESE NICHOLS THE TEXAS ENGINEERING PRACTICE ACT.

FREESE NICHOLS
4040 Broadway, Street, Suite 600
San Antonio, Texas 78209-6350
Phone - (210) 829-3800
Fax - (210) 298-3801
Web - www.freese.com

CITY OF CASTROVILLE
WWTP CAPACITY EXPANSION PROJECT
STRUCTURAL
STANDARD DETAILS
STANDARD STRUCTURAL DETAILS #4

FAN JOB NO.	CVL14259			
DATE	6/10/16			
DESIGNED	MRR			
DRAWN	JLM	MRR	11/16/16	
CHECKED	AD	MRR	10/25/16	
FILE NAME	ST-CVL-DT-TYPL03.dwg			

NO.	ISSUE	BY	DATE
1	CONTRACT AMENDMENT NO. 1	MRR	10/25/16
0	ISSUED FOR CONSTRUCTION	MRR	11/16/16

VERIFY SCALE Bar is one inch on original drawing. If not one inch on this sheet, adjust scale.
0 1"

SHEET SD-23
SEQ. 114

ACAD Rel: 21.0s (LMS Tech)
Filename: N:\ST\ST-CVL-DT-TYPL03.dwg
Last Saved: 6/17/2020 2:49 PM Saved By: 02198
Plot Date: 6/18/2020 11:21 AM Plot By: 02198 Filename: N:\ST\ST-CVL-DT-TYPL03.dwg

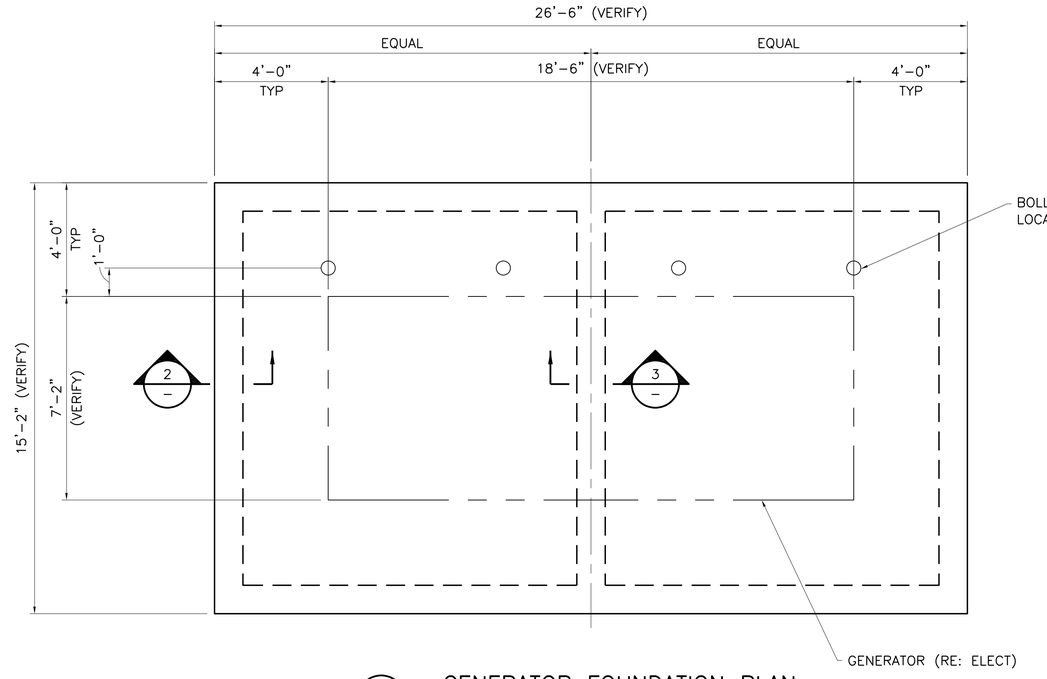

1 — GENERATOR FOUNDATION PLAN
3/8"=1'-0"

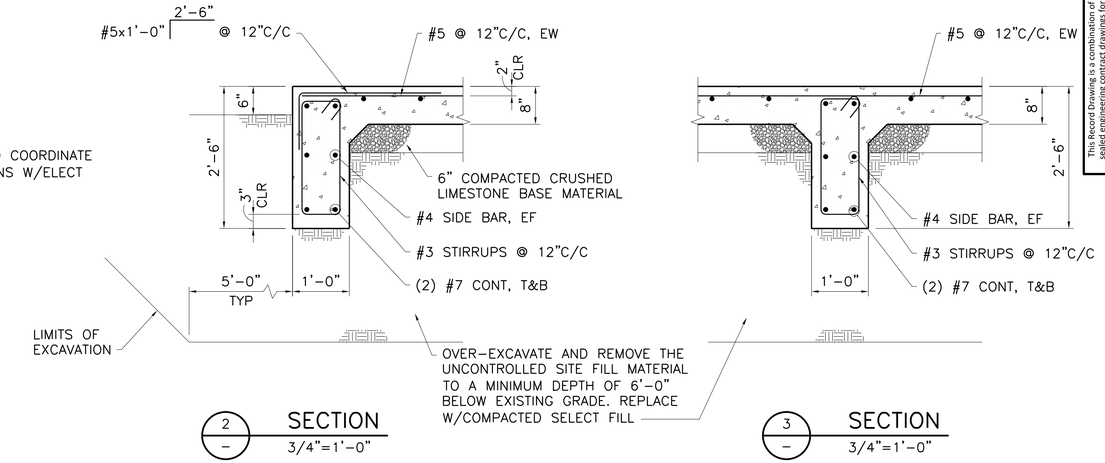

2 — SECTION
3/4"=1'-0"

3 — SECTION
3/4"=1'-0"

This Record Drawing is a combination of the sealed engineering contract drawings for this project, modified by information furnished by the contractor reflecting changes in the Project made during construction. The original sealed drawings are on file at the offices of
FREESE AND NICHOLS, INC.
RECORD DRAWINGS PREPARED ON:
6/24/2020

Freese and Nichols, Inc.
Texas Registered Engineering Firm F-2144

THE SEAL APPEARING ON THIS DOCUMENT WAS AUTHORIZED BY JUSTIN L. BLEVINS, P.E. # 124222 ON 7/07/2020. IT IS NOT TO BE USED FOR BIDDING PURPOSES. THE ORIGINAL SIGNED AND SEALED DOCUMENTS ARE THE RESPONSIBILITY OF THE REGISTERED ENGINEER NAMED ABOVE. IT WAS PREPARED UNDER THE TEXAS ENGINEERING PRACTICE ACT.

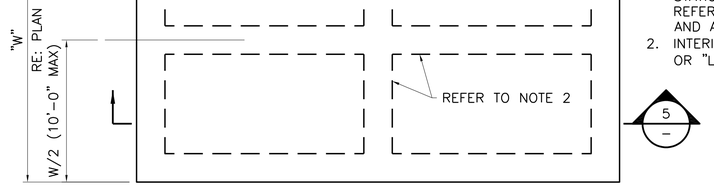

4 — PUMP PAD FOUNDATION PLAN
3/8"=1'-0"

NOTES:
1. PUMP PAD FOUNDATION APPLIES TO THE RAS PUMP STATION, THE UTILITY WATER PUMP STATION, AND THE SLUDGE FEED PUMP STATION. REFER TO MECHANICAL PLANS FOR DIMENSIONS AND ADDITIONAL INFORMATION.
2. INTERIOR BEAMS ARE ONLY REQUIRED WHEN "W" OR "L" IS EQUAL TO OR GREATER THAN 20'-0".

5

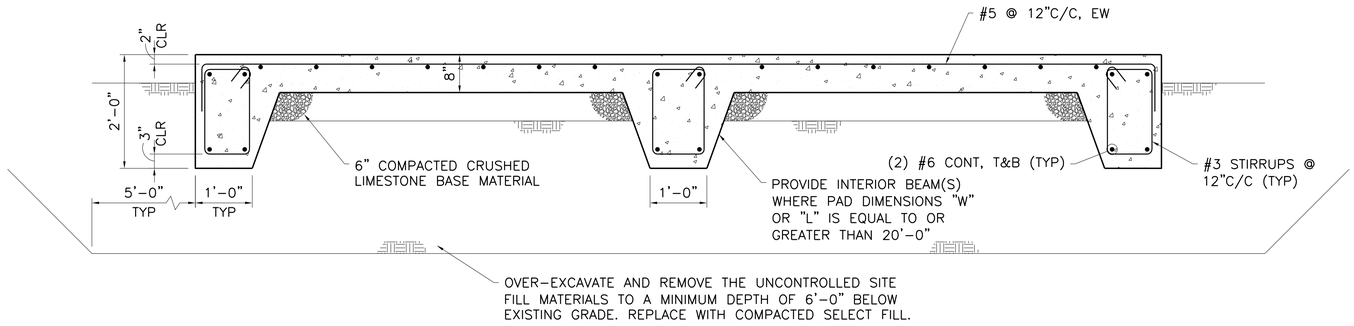

5 — PUMP PAD FOUNDATION SECTION
3/4"=1'-0"

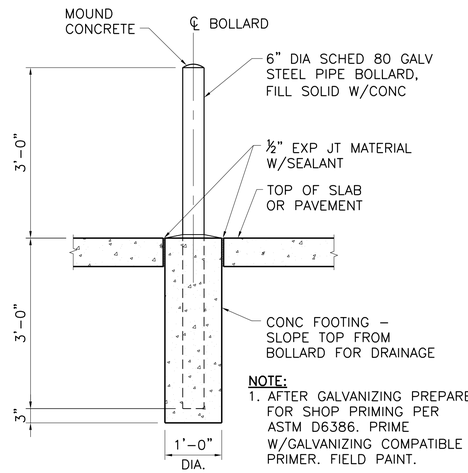

NOTE:
1. AFTER GALVANIZING PREPARE FOR SHOP PRIMING PER ASTM D6386. PRIME W/GALVANIZING COMPATIBLE PRIMER. FIELD PAINT.

6 — BOLLARD DETAIL
NOT TO SCALE

0 1' 2' 4'
3/8"=1'-0

0 6" 1' 2'
3/4"=1'-0

FREESE NICHOLS
4040 Broadway Street, Suite 600
San Antonio, Texas 78209-6350
Phone - (210) 979-3800
Fax - (210) 298-3801
Web - www.freese.com

CITY OF CASTROVILLE
WWTP CAPACITY EXPANSION PROJECT
STRUCTURAL
STANDARD DETAILS
STANDARD STRUCTURAL DETAILS #5

NO.	ISSUE	BY	DATE
1	RECORD DRAWING	MRR	06/24/20
0	ISSUED FOR CONSTRUCTION	MRR	11/16/16

VERIFY SCALE Bar is one inch on original drawing. If not one inch on this sheet, adjust scale.

F&N JOB NO. CVL14259
DATE 6/10/16
DESIGNED MRR
DRAWN JLM
CHECKED AD
FILE NAME ST-CVL-DT-TYPL05.dwg

SHEET SD-24
SEQ. 115

ACAD Rel: 21.0s (LMS Tech)
Filename: N:\ST\ST-CVL-DT-TYPL05.dwg
Last Saved: 6/18/2020 11:07 AM Saved By: 02198

Plot Date: 6/18/2020 11:21 AM Plot By: 02198 Filename: N:\ST\ST-CVL-DT-TYPL05.dwg

ABBREVIATIONS

ABBR	DESCRIPTION
AS	AIR SUPPLY
CPU	CENTRAL PROCESSOR UNIT
DCU	DISTRIBUTED CONTROL UNIT
ES	ELECTRIC SUPPLY
FOC	FIBER OPTIC CABLE
FOM	FIBER OPTIC MODEM
FREQ	FREQUENCY
HDC	HISTORICAL DATA COLLECTION
I/O	INPUT OUTPUT
MC	MOTOR CONTROLLER
ORP	OXYGEN REDUCTION POTENTIAL
OWS	OPERATOR WORK STATION
PE	PRESSURE SENSOR
PIT	PRESSURE INDICATOR TRANSMITTER
PLC	PROGRAMMABLE LOGIC CONTROLLER
PS	POWER SUPPLY
PSH	PRESSURE SWITCH HIGH
PSL	PRESSURE SWITCH LOW
PW	PROCESS WATER
RIO	REMOTE INPUT OUTPUT
RTU	REMOTE TERMINAL UNIT
SE	SPEED SENSOR
SIK	SPEED INDICATE
SL	CONTROL STATION SLUDGE
SP	SET POINT
VFD	VARIABLE FREQUENCY DRIVE
SS	SOFT STARTER

HAND SWITCH ABBREVIATIONS

ABBR	DESCRIPTION
H/O/A	HAND/OFF/AUTO
L/R	LOCAL/REMOTE
H/O/S	HAND/OFF/SCADA
O/C	OPEN/CLOSE
L/O/C	LOCAL/OFF/COMPUTER
A/H	AUTO/HAND
L/O/R	LOCAL/OFF/REMOTE
L/A	LOCAL/AUTO
O/C/S	OPEN/CLOSE/STOP
O/O/A	ON/OFF/AUTO
L/C	LOCAL/COMPUTER
N/B	NORMAL/BYPASS

INSTRUMENT IDENTIFICATION

	PRIMARY LOCATION NORMALLY ACCESSIBLE TO OPERATOR (2)	FIELD MOUNTED	AUXILIARY LOCATION NORMALLY ACCESSIBLE TO OPERATOR (2)
DISCRETE INSTRUMENTS			
SHARED DISPLAY SHARED CONTROL			
COMPUTER FUNCTION			
PROGRAMMABLE LOGIC CONTROL			
		 INSTRUMENT WITH LONG TAG NUMBERS	 INSTRUMENTS SHARING COMMON HOUSING
	 PILOT LIGHT	 PANEL MOUNTED PATCHBOARD POINT 12	 PURGE OR FLUSING DEVICE
	 RESET FOR LATCH-TYPE ACTUATOR	 DIAPHRAGM SEAL	 UNDEFINED INTERLOCK LOGIC

(1) ABBREVIATIONS OF THE USER'S CHOICE SUCH AS IP1 (INSTRUMENT PANEL NO.1), IC2 (INSTRUMENT CONSOLE NO.2), CC3 (COMPUTER CONSOLE NO.3), ETC., MAY BE USED WHEN IT IS NECESSARY TO SPECIFY INSTRUMENT OR FUNCTION LOCATION.

(2) NORMALLY INACCESSIBLE OR BEHIND-THE-PANEL DEVICES OR FUNCTIONS MAY BE DEPICTED BY USING THE SAME SYMBOLS BUT WITH DASHED HORIZONTAL BARS, I.E.



INSTRUMENT SOCIETY OF AMERICA TABLE

	FIRST LETTER (S)		SUCCEEDING LETTERS		
LETTER	PROCESS OR INITIATING VARIABLE	MODIFIER	READOUT OR PASSIVE FUNCTION	OUTPUT FUNCTION	MODIFIER
A	ANALYSIS (+)		ALARM		
B	BURNER, COMBUSTION		USERS CHOICE (+)	USERS CHOICE (+)	USERS CHOICE (+)
C	USER'S CHOICE (+)			CONTROL	
D	USER'S CHOICE (+)	DIFFERENTIAL			
E	VOLTAGE		SENSOR (PRIMARY ELEMENT)		
F	FLOW RATE	RATIO (FRACTION)			
G	USER'S CHOICE (+)		GLASS, VIEWING DEVICE		
H	HAND				HIGH
I	CURRENT (ELECTRICAL)		INDICATE		
J	POWER	SCAN			
K	TIME, TIME SCHEDULE	TIME RATE OF CHANGE		CONTROL STATION	
L	LEVEL		LIGHT		LOW
M	MOTOR	MOMENTARY			MIDDLE, INTERMEDIATE
N	USERS CHOICE (+)		USERS CHOICE (+)	USERS CHOICE (+)	USERS CHOICE (+)
O	USERS CHOICE (+)		ORIFICE, RESTRICTION		
P	PRESSURE, VACUUM		POINT (TEST) CONNECTION		
Q	QUANTITY	INTEGRATE, TOTALIZE			
R	RADIATION		RECORD		
S	SPEED, FREQUENCY	SAFETY		SWITCH	
T	TEMPERATURE			TRANSMIT	
U	MULTIVARIABLE		MULTIFUNCTION	MULTIFUNCTION	MULTIFUNCTION (+)
V	VIBRATION MECH. ANALYSIS			VALVE, DAMPER, LOUVER	
W	WEIGHT, FORCE		WELL		
X	UNCLASSIFIED (+)	X AXIS	UNCLASSIFIED	UNCLASSIFIED (+)	UNCLASSIFIED (+)
Y	EVENT, STATE OR PRESENCE	Y AXIS		RELAY, COMPUTE, CONVERT	
Z	POSITION, DIMENSION	Z AXIS		DRIVER, ACTUATOR, UNCLASSIFIED FINAL CONTROL ELEMENT	

(+) WHEN USED, EXPLANATION IS SHOWN ADJACENT TO INSTRUMENT SYMBOL. SEE ABBREVIATIONS AND LETTER SYMBOLS.

PIPING LABELS

SYMBOL	DESCRIPTION
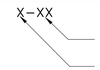	PIPE MATERIAL DI-DOCTILE IRON PIPE DIAMETER

EXAMPLE SIGNALS

SYMBOL	DESCRIPTION
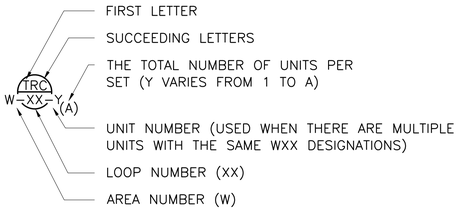	FIRST LETTER SUCCEEDING LETTERS THE TOTAL NUMBER OF UNITS PER SET (Y VARIES FROM 1 TO A) UNIT NUMBER (USED WHEN THERE ARE MULTIPLE UNITS WITH THE SAME WXX DESIGNATIONS) LOOP NUMBER (XX) AREA NUMBER (W)
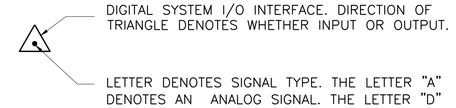	DIGITAL SYSTEM I/O INTERFACE. DIRECTION OF TRIANGLE DENOTES WHETHER INPUT OR OUTPUT. LETTER DENOTES SIGNAL TYPE. THE LETTER "A" DENOTES AN ANALOG SIGNAL. THE LETTER "D" DENOTES A DISCRETE SIGNAL.

NOTE:
THIS IS A STANDARD LEGEND. THEREFORE, NOT ALL OF THIS INFORMATION MAY BE USED ON THIS PROJECT.

LINE TYPES

SYMBOL	DESCRIPTION
	INSTRUMENT SUPPLY OR SOLENOID OPERATED VALVE (1)
	UNDEFINED SIGNAL
	PNEUMATIC SIGNAL (2)
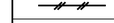	ELECTRIC SIGNAL
	HYDRAULIC SIGNAL
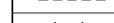	CAPILLARY TUBE
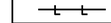	ELECTROMAGNETIC OR SONIC, SIGNAL (GUIDED) (3)
	ELECTROMAGNETIC OR SONIC, SIGNAL (NOT GUIDED) (3)
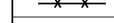	INTERNAL SYSTEM LINK (SOFTWARE OR DATA LINK)
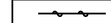	MECHANICAL LINK
	PNEUMATIC BINARY SIGNAL (ON-OFF)
	ELECTRIC BINARY SIGNAL (ON-OFF)
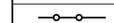	ELECTRIC ANALOG SIGNAL
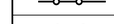	NON-CONNECTING LINES
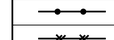	CONNECTING LINES

GENERAL NOTES

(1) THE FOLLOWING ABBREVIATIONS ARE SUGGESTED TO DENOTE THE TYPES OF POWER SUPPLY. THESE DESIGNATIONS MAY ALSO BE APPLIED TO PURGE FLUID SUPPLIES.

AS – AIR SUPPLY
HS – HYDRAULIC SUPPLY – OPTION
IA – INSTRUMENT AIR – OPTION
NS – NITROGEN SUPPLY
PA – PLANT AIR
SS – STEAM SUPPLY
ES – ELECTRIC SUPPLY
WS – WATER SUPPLY
GS – GAS SUPPLY

THE SUPPLY LEVEL MAY BE ADDED TO THE INSTRUMENT SUPPLY LINE, E.G, AS-100, 100-PSIG AIR SUPPLY: ES-24DC, A 24-VOLT DIRECT CURRENT POWER SUPPLY.

(2) THE PNEUMATIC SIGNAL SYMBOL APPLIES TO A SIGNAL USING ANY GAS AS THE SIGNAL MEDIUM. IF A GAS OTHER THAN AIR IS USED, THE GAS MAY BE IDENTIFIED BY A NOTE ON THE SIGNAL SYMBOL OR OTHERWISE.

ELECTROMAGNETIC PHENOMENA INCLUDE HEAT, RADIO WAVES, NUCLEAR RADIATION AND LIGHT.

This Record Drawing is a combination of the sealed engineering contract drawings for this project, modified by information furnished by the contractor reflecting changes in the Project made during construction. The original sealed drawings are on file at the offices of
FREESE AND NICHOLS, INC.
RECORD DRAWINGS PREPARED ON:
06/24/20

Freese and Nichols, Inc.
Texas Registered Engineering Firm F-2144

THE SEAL HAS ORIGINALLY APPEARED ON THIS DOCUMENT WAS AUTHORIZED BY JOHN W.D. MANNING, P.E. ON 06/24/20. IT IS A VIOLATION OF A SEALED DOCUMENT WITHOUT PROPER ALTERATION OF A SEALED DOCUMENT WITHOUT PROPER NOTIFICATION TO THE ENGINEER WHO SEALED THE DOCUMENT IS A MISDEMEANOR OFFENSE UNDER THE TEXAS ENGINEERING PRACTICE ACT

FREESE AND NICHOLS
4040 Broadway Street, Suite 600
San Antonio, Texas 78209-6350
Phone - (210) 538-5300
Fax - (210) 826-2901
Web - www.freese.com

CITY OF CASTROVILLE

WWTP CAPACITY EXPANSION PROJECT

PROCESS AND INSTRUMENTATION

LEGEND I

FAN JOB NO. CVL14259
DATE 6/10/16
DESIGNED JWM/RS
DRAWN TMG
CHECKED TWZ
FILE NAME PI-ALL-OA-LGND.dwg

NO.	ISSUE	DATE	BY
1	RECORD DRAWINGS	06/24/20	JWM
0	ISSUED FOR CONSTRUCTION	11/18/16	JWM

VERIFY SCALE Bar is one inch on original drawing. If not one inch on this sheet, adjust scale.
0 1"

SHEET PI-1
SEQ.

ACAD Rel: 21.0s (LMS Tech)
Filename: N:\PI\PI-ALL-OA-LGND.dwg
Last Saved: 10/9/2019 10:21 AM Saved By: 03576
Plot Date: 6/18/2020 5:53 PM Plot By: 90119 Filename: N:\PI\PI-ALL-OA-LGND.dwg

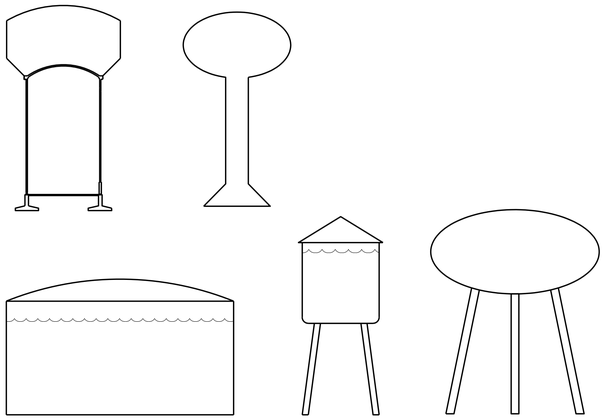

CENTRIFUGAL PUMP VARIABLE SPEED

BLOWER

SUBMERSIBLE PUMP

VERTICAL TURBINE PUMP

PROGRESSING CAVITY PUMP

MIXER

FLOATS

METERING PUMP

CHOPPER

HOSE PUMP

CENTRIFUGAL PUMP CONSTANT SPEED

SCREEN

EJECTOR

PRIMARY ELEMENT

VENTURI FLOW METER

SONIC

TELESCOPING VALVE

DAHL FLOW TUBE

SOLENOID OPERATED PUMP CONTROL VALVE

KNIFE GATE

SLIDE GATE

GATE VALVE

GLOBE VALVE

BALL VALVE

PLUG VALVE

CHECK VALVE

DOUBLE CHECK VALVE

BUTTERFLY VALVE

NEEDLE VALVE

THREE-WAY VALVE

PINCH VALVE

SELF ACTUATING PRESSURE REGULATING VALVE

PRESSURE RELIEF VALVE

BACK PRESSURE VALVE

BACK PRESSURE/ANTI SIPHON VALVE

SPRING LOADED RELIEF VALVE

SOLENOID OPERATED VALVE

MOTOR OPERATED VALVE

MOTOR-ARROW DENOTES VARIABLE SPEED

MOTOR

ELECTROMAGNETIC FLOW METER

THERMOMETER

PULSATION DAMPER ASSEMBLY

PRESSURE GAUGE

EXPANSION CHAMBER ASSEMBLY

UTILITY STATION

FIRE EXTINGUISHER

HOISTING HOOK

DRAIN

CALIBRATION CHAMBER

TEMPERATURE INDICATOR

PRESSURE DIFFERENTIAL INDICATOR

PRESSURE SWITCH

STRAINER

FLEXIBLE COUPLING

PIPE COUPLING

RESTRAINED EXPANSION JOINT

DIRECTION OF FLOW

EXPANSION JOINT

EXPANSION JOINT

GAS FILTER

VENT

FLEXIBLE HOSE

SUMP PUMP

AIR RELEASE VALVE

HOSE BIB

Y-STRAINER

QUICK CONNECTOR

REDUCER OR INCREASER

BLIND FLANGE, CAP, OR PLUG

UNION

HOSE BIBB

CLEAN OUT

WATER SURFACE ELEVATION

FIRE HYDRANT

LIGHTING STANDARD

MANHOLE

WATER STOP

FLOW ARROW

CHEMICAL FEED POINT

PROCESS LINE TYPES LEGEND

LIQUIDS

SOLIDS

RECYCLE

CHEMICAL

AIR

This Record Drawing is a combination of the sealed engineering contract drawings for this project, modified by information furnished by the contractor reflecting changes in the Project made during construction. The original sealed drawings are on file at the offices of FREESE AND NICHOLS, INC. RECORD DRAWINGS PREPARED ON: 06/24/20

Freese and Nichols, Inc.
Texas Registered Engineering Firm F-2144

THE SEAL THAT ORIGINALLY APPEARED ON THIS DOCUMENT WAS AUTHORIZED BY JOHN W.P. MANNING, P.E. TEXAS NO. 95794 ON 06/10/2016. ALTERATION OF A SEALED DOCUMENT WITHOUT PROPER NOTIFICATION OF THE RESPONSIBLE ENGINEER IS AN OFFENSE UNDER THE TEXAS ENGINEERING PRACTICE ACT.

FREESE AND NICHOLS
4040 Broadway Street, Suite 600
San Antonio, Texas 78209-6350
Phone - (210) 298-3800
Fax - (210) 298-3801
Web - www.freese.com

CITY OF CASTROVILLE
WWTP CAPACITY EXPANSION PROJECT
PROCESS AND INSTRUMENTATION
LEGEND II

NO.	ISSUE	BY	DATE
2	RECORD DRAWINGS	JMM	06/24/20
1	ISSUED FOR CONSTRUCTION	JWM	11/18/16

VERIFY SCALE Bar is one inch on original drawing. If not one inch on this sheet, adjust scale.

F&N JOB NO. CVL14259
DATE 6/10/16
DESIGNED JWM/RS
DRAWN TMG
REVISED
CHECKED JNH
FILE NAME PI-ALL-OA-LGND2.dwg

SHEET PI-2
SEQ.

ACAD Rel: 21.0s (LMS Tech)
Filename: N:\PI\PI-ALL-OA-LGND2.dwg
Last Saved: 10/9/2019 10:22 AM Saved By: 03576

Plot Date: 6/18/2020 5:53 PM Plot By: 90119 Filename: N:\PI\PI-ALL-OA-LGND2.dwg

BNR MAIN CONTROLLER

H-O-A	SPEED	SPEED CONTROL	RUN	FAIL	RUNNING	FAULT	OVER TEMP	LOW OIL PRESSURE
YI 101A	SI 101	SC 101	HS 101A	YA 101A	YI 101B	YA 101B	TAHY 101	PAL 101
YI 102A	SI 102	SC 102	HS 102A	YA 102A	YI 102B	YA 102B	TAHY 102	PAL 102
YI 103A	HS 103A	YA 103A	YI 103B	YA 103B	TAHY 103	PAL 103		
YI 104A	HS 104A	YA 104A	YI 104B	YA 104B	TAHY 104	PAL 104		
YI 203A	HS 203A	YA 203A	YI 203B	YA 203B	TAHY 203	PAL 203		
YI 204A	HS 204A	YA 204A	YI 204B	YA 204B	TAHY 204	PAL 204		

H-O-A	HS
H-O-A	HS 101B
H-O-A	HS 102B
H-O-A	HS 103
H-O-A	HS 104
H-O-A	HS 203
H-O-A	HS 204

BNR BASIN NO. 2 AERATOR CONTROLLER

H-O-A	SPEED	SPEED CONTROL	RUN	FAIL	RUNNING	FAULT	OVER TEMP	LOW OIL PRESSURE
YI 201A	SI 201	SC 201	HS 201A	YA 201A	YI 201B	YA 201B	TAHY 201	PAL 201
YI 202A	SI 202	SC 202	HS 202A	YA 202A	YI 202B	YA 202B	TAHY 202	PAL 202

H-O-A	HS
H-O-A	HS 201B
H-O-A	HS 202B

FLOW METER SIGNALS TERMINATE IN PLC ENCLOSURE FOR CHEMICAL FEED. SEE PI-5

FLOW METER SIGNALS TERMINATE IN PLC ENCLOSURE FOR CHEMICAL FEED. SEE PI-5

LSL
LSH
PLANT DRAIN
PLANT DRAIN LIFT STATION
PLANT NPW SYSTEM
SOLIDS TO LANDFILL
FIT 100A
FE 100A
MICROSTRAINER FINESCREEN
FROM EASTSIDE LIFT STATION
FE 100B
FIT 100B
FROM REGIONAL LIFT STATION
FE 100C
FIT 100C
OVERFLOW
DRAIN
OVERFLOW
MANUAL BAR SCREEN
LSH 100
ALUM CHEMICAL TOTES
DUPLEX METERING PUMP SKID
E PI-4

ZC 110 ZT 110 YA 110
A PI-4
ELIMINATIR GATE
MOT-110
TSH 103 OIL 103
MOT-103
ORP 1A
AIT 107
AE 107
ZC 105 ZT 105 YA 105
MOT-105
DIVERTIR GATE
TSH 104 OIL 104
MOT-104
AIT 108
AE 108
D.O. 1A
BNR BASIN NO. 1
TSH 101 OIL 101
MOT-101
AIT 109
AE 109
D.O. 1B
TSH 102 OIL 102
MOT-102
YD
RAS
B PI-4
ZC 210 ZT 210 YA 210
C PI-4
ELIMINATIR GATE
MOT-210
TSH 204 OIL 204
MOT-204
ORP 1A
AIT 207
AE 207
ZC 205 ZT 205 YA 205
MOT-205
DIVERTIR GATE
TSH 203 OIL 203
MOT-203
AIT 208
AE 208
D.O. 1A
BNR BASIN NO. 2
TSH 201 OIL 201
MOT-201
AIT 209
AE 209
D.O. 1B
TSH 202 OIL 202
MOT-202
YD

GENERAL NOTES:

1. REFER TO SPECIFICATION 40 90 02 SUPERVISORY CONTROL AND DATA ACQUISITION FOR THE COMPLETE I/O LIST AND LOOP DESCRIPTIONS.
2. REFER TO SPECIFICATION 46 53 62 CARROUSEL SYSTEM FOR SCOPE OF CONTROLS SYSTEM PROVIDED BY BNR MANUFACTURER.

This Record Drawing is a combination of the sealed engineering contract drawings for this project, modified by information furnished by the contractor reflecting changes in the Project made during construction. The original sealed drawings are on file at the offices of FREESE AND NICHOLS, INC.
RECORD DRAWINGS PREPARED ON: 06/24/20

THE SEAL THAT ORIGINALLY APPEARED ON THIS DOCUMENT WAS AUTHORIZED BY JOHN W. MANNING, P.E. ____. IT MAY NOT BE USED TO SEAL ANY REVISED VERSION OF A SEALED DOCUMENT WITHOUT PROPER AUTHORIZATION AND MAY NOT BE USED TO SEAL ANY DOCUMENT BEING USED FOR NEGOTIATION, CONSTRUCTION, OR PERMITTING PURPOSES UNLESS IT APPEARS IN CONFORMANCE WITH THE TEXAS ENGINEERING PRACTICE ACT

Freese and Nichols, Inc.
Texas Registered Engineering Firm F-2144

FREESE NICHOLS
4040 Broadway Street, Suite 600
San Antonio, Texas 78209-6350
Phone - (210) 824-3500
Fax - (210) 826-2901
Web - www.freese.com

CITY OF CASTROVILLE
WWTP CAPACITY EXPANSION PROJECT
ELECTRICAL
P&ID NO. 1

FAN JOB NO.	DATE	BY	NO.	ISSUE
CVL14259				
DATE 6/10/16	06/24/20	JWM	2	RECORD DRAWINGS
DESIGNED CCC	11/18/16	JWM	1	ISSUED FOR CONSTRUCTION
DRAWN KV				
CHECKED TWS				
FILE NAME PI-CVL-DG-PROC01.dwg				

VERIFY SCALE Bar is one inch on original drawing. If not one inch on this sheet, adjust scale.
0 1"

SHEET PI-3
SEQ.

ACAD Rel: 21.0s (LMS Tech)
Filename: N:\PI\PI-CVL-DG-PROC01.dwg
Last Saved: 10/9/2019 10:38 AM Saved By: 03576

Plot Date: 6/18/2020 5:53 PM Plot By: 90119 Filename: N:\PI\PI-CVL-DG-PROC01.dwg

GENERAL NOTES:

1. REFER TO SPECIFICATION 40 90 02 SUPERVISORY CONTROL AND DATA ACQUISITION FOR THE COMPLETE I/O LIST AND LOOP DESCRIPTIONS.

NOTES BY SYMBOL "⬡"

1. FLOW METER PROVIDED UNDER 46 21 23 SEMI-CYLINDRICAL FINE SCREENS. CONTRACTOR SHALL VERIFY AND COORDINATE ACCORDINGLY.
2. FILTER CONTROLS PROVIDED BY MANUFACTURER.
3. RAS PUMP STATION TIMER CONTROLS RESIDE IN THE CARROUSEL BASIN CONTROL PANEL.

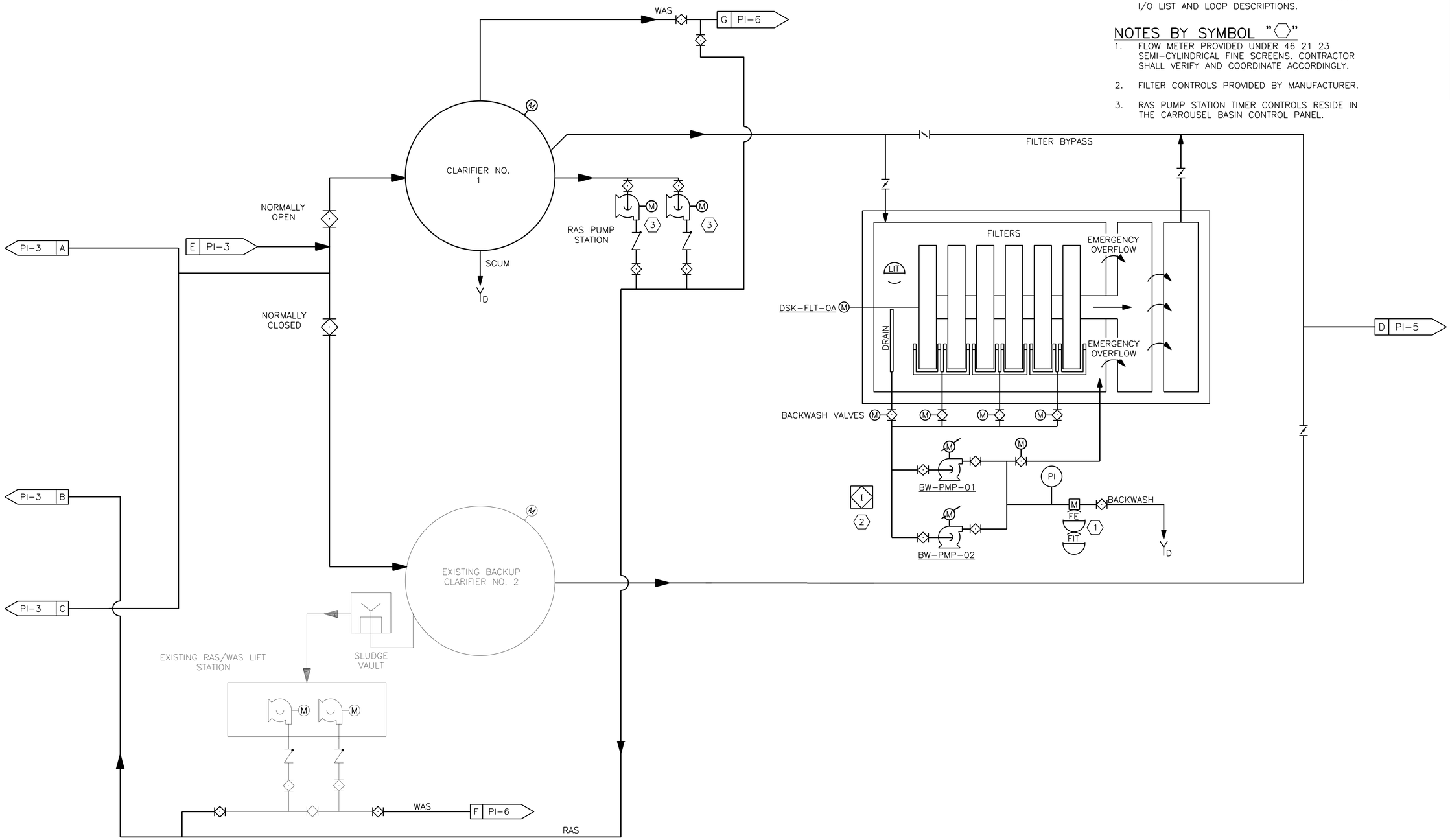

This Record Drawing is a combination of the sealed engineering contract drawings for this project, modified by information furnished by the contractor reflecting changes in the Project made during construction. The original sealed drawings are on file at the offices of FREESE AND NICHOLS, INC. RECORD DRAWINGS PREPARED ON: 06/24/20

Freese and Nichols, Inc.
Texas Registered Engineering Firm F-2144

THE SEAL THAT ORIGINALLY APPEARED ON THIS DOCUMENT WAS AUTHORIZED BY JOHN W.P. MANNING, P.E. TEXAS NO. 92794 ON 06/10/2016. ALTERATION OF A SEALED DOCUMENT WITHOUT PROPER NOTIFICATION OF THE RESPONSIBLE ENGINEER IS AN OFFENSE UNDER THE TEXAS ENGINEERING PRACTICE ACT.

FREESE AND NICHOLS
4040 Broadway Street, Suite 600
San Antonio, Texas 78209-6350
Phone - (210) 298-3800
Fax - (210) 298-3801
Web - www.freese.com

CITY OF CASTROVILLE
WWTP CAPACITY EXPANSION PROJECT
ELECTRICAL
P&ID NO. 2

NO.	ISSUE	BY	DATE
2	RECORD DRAWINGS	JWM	06/24/20
1	ISSUED FOR CONSTRUCTION	JWM	11/18/16

F&N JOB NO. CVL14259
DATE 6/10/16
DESIGNED CCG
DRAWN KV
REVISED
CHECKED TWS
FILE NAME PI-CVL-DG-PROC02.dwg

VERIFY SCALE 0 1 Bar is one inch on original drawing. If not one inch on this sheet, adjust scale.

SHEET PI-4
SEQ.

ACAD Rel: 21.0s (LMS Tech)
Filename: N:\PI\PI-CVL-DG-PROC02.dwg
Last Saved: 10/9/2019 10:33 AM Saved By: 03576

Plot Date: 6/18/2020 5:54 PM Plot By: 90119 Filename: N:\PI\PI-CVL-DG-PROC02.dwg

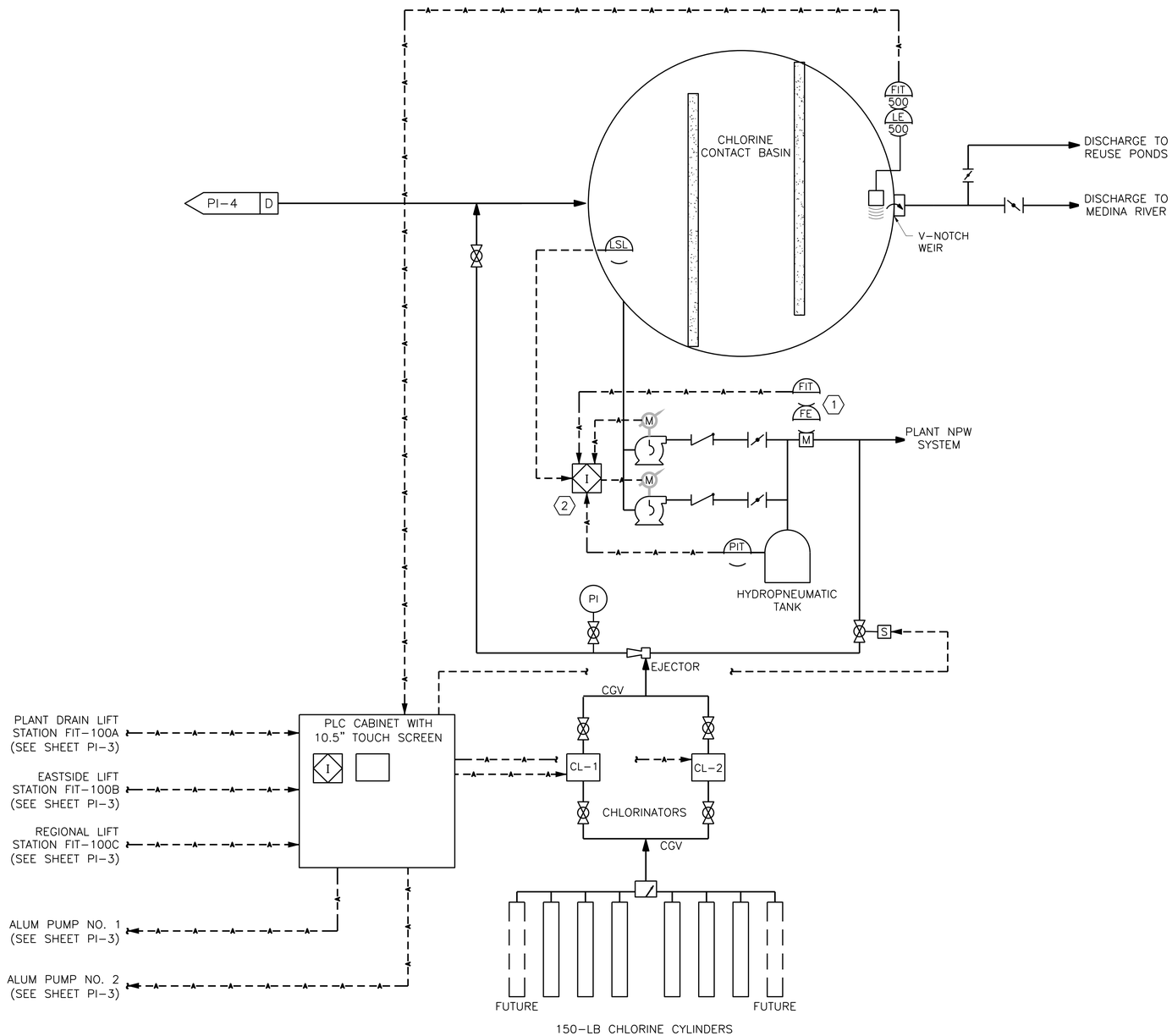

GENERAL NOTES:

1. REFER TO SPECIFICATION 40 90 02 SUPERVISORY CONTROL AND DATA ACQUISITION FOR THE COMPLETE I/O LIST AND LOOP DESCRIPTIONS.

NOTES BY SYMBOL "⬡"

1. FLOW METER SUPPLIED UNDER 31 11 16 PLANT SERVICE WATER SYSTEM. CONTRACTOR SHALL VERIFY AND COORDINATE.
2. PLANT SERVICE WATER SYSTEM CONTROL PANEL SUPPLIED BY MANUFACTURER.

This Record Drawing is a combination of the sealed engineering contract drawings for this project, modified by information furnished by the contractor reflecting changes in the Project made during construction. The original sealed drawings are on file at the offices of FREESE AND NICHOLS, INC. RECORD DRAWINGS PREPARED ON: 06/24/20

Freese and Nichols, Inc.
Texas Registered Engineering Firm F-2144

THE SEAL THAT ORIGINALLY APPEARED ON THIS DOCUMENT WAS AUTHORIZED BY JOHN W.P. MANNING, P.E. TEXAS NO. 92794 ON 06/10/2016. ALTERATION OF A SEALED DOCUMENT WITHOUT PROPER NOTIFICATION OF THE RESPONSIBLE ENGINEER IS AN OFFENSE UNDER THE TEXAS ENGINEERING PRACTICE ACT.

FREESE AND NICHOLS
4040 Broadway Street, Suite 600
San Antonio, Texas 78209-6350
Phone - (210) 298-3800
Fax - (210) 298-3801
Web - www.freese.com

CITY OF CASTROVILLE
WWTP CAPACITY EXPANSION PROJECT
PROCESS & INSTRUMENTATION
P&ID NO. 3

NO.	ISSUE	BY	DATE
2	RECORD DRAWINGS	JWM	06/24/20
1	ISSUED FOR CONSTRUCTION	JWM	11/18/16

F&N JOB NO. CVL14259
DATE 6/10/16
DESIGNED CCG
DRAWN KV
REVISED
CHECKED TWS
FILE NAME PI-CVL-DG-PROC03.dwg

VERIFY SCALE 0 1
Bar is one inch on original drawing. If not one inch on this sheet, adjust scale.

SHEET PI-5
SEQ.

ACAD Rel: 21.0s (LMS Tech)
Filename: N:\PI\PI-CVL-DG-PROC03.dwg
Last Saved: 10/9/2019 10:36 AM Saved By: 03576

Plot Date: 6/18/2020 5:54 PM Plot By: 90119 Filename: N:\PI\PI-CVL-DG-PROC03.dwg

GENERAL NOTES:

1. REFER TO SPECIFICATION 40 90 02 SUPERVISORY CONTROL AND DATA ACQUISITION FOR THE COMPLETE I/O LIST AND LOOP DESCRIPTIONS.
2. MIXER MOTOR OPTIONAL PER SCREW PRESS MANUFACTURERS RECOMMENDATION. REFERENCE SECTION 46 76 22 "SCREW PRESS".

NOTES BY SYMBOL "⬡":

1. MAGMETER PROVIDED UNDER SPECIFICATION 46 76 22 SCREW PRESS. CONTRACTOR RESPONSIBLE TO VERIFY.

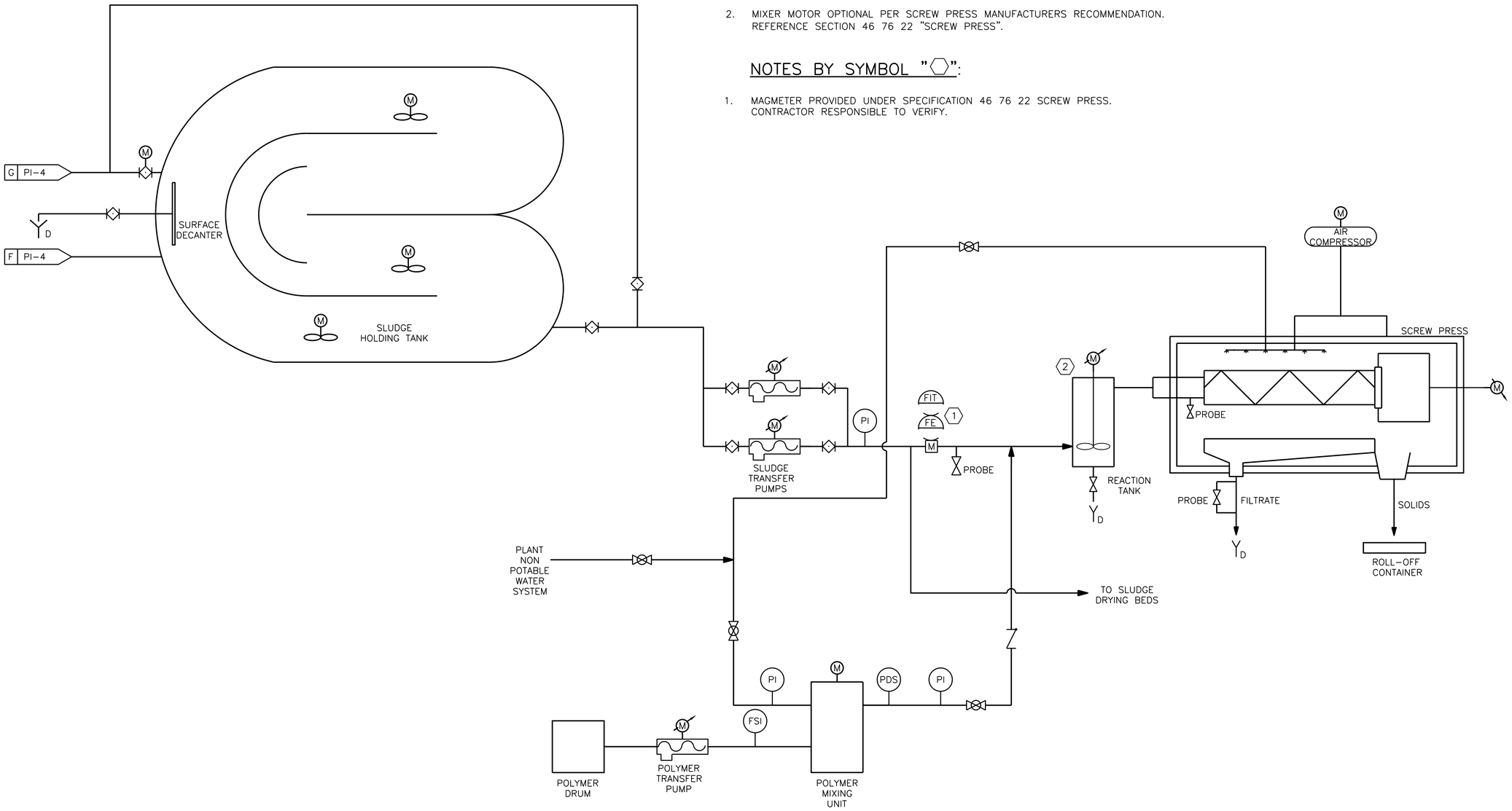

This Record Drawing is a combination of the sealed engineering contract drawings for this project, modified by information furnished by the contractor reflecting changes in the Project made during construction. The original sealed drawings are on file at the offices of FREESE AND NICHOLS, INC.
RECORD DRAWINGS PREPARED ON: 06/24/20

Freese and Nichols, Inc.
Texas Registered Engineering Firm F-2144

THE SEAL THAT ORIGINALLY APPEARED ON THIS DOCUMENT WAS AUTHORIZED BY JOHN W. MANNING, P.E. ____
THIS NOTICE IS TO COMPLY WITH BOARD RULE 137.33 (5) (A) ALTERATION OF A SEALED DOCUMENT WITHOUT PROPER AUTHORIZATION AND PROPER DISCLOSURE IS A VIOLATION OF THE OCCUPATIONAL ENGINEERING AND LAND SURVEYING PRACTICE ACT

FREESE NICHOLS
4040 Broadway Street, Suite 600
San Antonio, Texas 78209-6350
Phone - (210) 824-3500
Fax - (210) 826-2901
Web - www.freese.com

CITY OF CASTROVILLE
WWTP CAPACITY EXPANSION PROJECT
PROCESS & INSTRUMENTATION
P&ID NO. 4

FAN JOB NO.	DATE	BY	NO.	ISSUE
CVL14259				
DATE 6/10/16			2	RECORD DRAWINGS 06/24/20 JMM
DESIGNED CCG			1	ISSUED FOR CONSTRUCTION 11/18/16 JWM
REMARK KV				VERIFY SCALE Bar is one inch on original drawing. If not one inch on this sheet, adjust scale.
REVISED				0 1"
CHECKED TWS				
FILE NAME PI-CVL-DG-PRO03.dwg				

SHEET PI-6
SEQ.

ACAD Rel: 21.0s (LMS Tech)
Filename: N:\PI\PI-CVL-DG-PRO03.dwg
Last Saved: 10/9/2019 10:36 AM Saved By: 03576

Plot Date: 6/18/2020 5:54 PM Plot By: 90119 Filename: N:\PI\PI-CVL-DG-PRO03.dwg

ABBREVIATIONS	
AC	ALTERNATING CURRENT
AF	AMP FRAME
AFD	ADJUSTABLE FREQUENCY DRIVE
AFF	ABOVE FINISHED FLOOR OR GRADE
AG	ABOVE GRADE
AGSB	ABOVE GROUND SPLICE BOX
AIC	AMPERES INTERRUPTING CAPACITY
AL OR ALUM	ALUMINUM
AMP OR A	AMPERE
AT	AMP TRIP
ATS	AUTOMATIC TRANSFER SWITCH
AUTO	AUTOMATIC
AUX	AUXILIARY
AWG	AMERICAN WIRE GAUGE
C.	CONDUIT
CB	CIRCUIT BREAKER
C/C	CENTER TO CENTER
CHH	COMMUNICATION MANHOLE/HANDHOLE
CKT	CIRCUIT
CLF	CURRENT LIMITING FUSE
CONT.	CONTINUATION
CP	CONTROL PANEL
CPT	CONTROL POWER TRANSFORMER
CR	CONTROL RELAY
CS	CONTROL SWITCH OR COMBINATION STARTER
CT	CURRENT TRANSFORMER
CU	COPPER
DC	DIRECT CURRENT
DI	DOOR INTERLOCK
DN	DOWN
DP	DIFFERENTIAL PRESSURE
DWG	DRAWING
EMH	ELECTRICAL MANHOLE/HANDHOLE
EC	EMPTY CONDUIT
ELEC	ELECTRICAL
ELEV	ELEVATION
EM	EMERGENCY
EHH	ELECTRICAL MANHOLE
EO	ELECTRICALLY OPERATED
ETM	ELAPSED TIME METER
EUC	ELECTRIC UTILITY CO.
EXIST.	EXISTING
FBO	FURNISHED BY OTHERS
FO	FIBER OPTIC
FRP	FIBERGLASS REINFORCED POLYESTER
FT	FEET
FU	FUSE
G OR GRD	GROUND
GA.	GAUGE
GCP	GENERATOR CONTROL PANEL
GEN	GENERATOR
GFI	GROUND FAULT INTERRUPTER
GFS	GROUND FAULT SENSING
GO	GATE OPERATOR
GRS	GALVANIZED RIGID STEEL
HH	HANDHOLE
HP	HORSEPOWER
HT	HEIGHT
HTP	HEAT TRACE PANEL
HTR	HEATER
HZ	HERTZ
ID	INTERNAL DIAMETER
IMH	INSTRUMENT MANHOLE
INST	INSTRUMENT
IRP	INTERPOSING RELAY PANEL
JB	JUNCTION BOX
KVA	KILOVOLT-AMPERE
KW	KILOWATT
LA	LIGHTNING ARRESTER
LC	LIGHTNING CONTACTOR
LED	LIGHT EMITTING DIODE
LGTS ON LTG	LIGHTS/LIGHTING
LP	LIGHTING PANEL
LSIG	LONG, SHORT, INSTANTANEOUS, GROUND
MBFV	MOTOR OPERATED BUTTERFLY VALVE
MCB	MAIN CIRCUIT BREAKER
MCC	MOTOR CONTROL CENTER
MCP	MOTOR CIRCUIT PROTECTOR
MFR	MANUFACTURER
MFR'S	MANUFACTURER'S
MH	MANHOLE
ML	MULTILIN
MOV	MOTOR OPERATED VALVE
MLO	MAIN LUGS ONLY
MPR	MOTOR PROTECTION RELAY
MR	MULTIRATIO
MTD	MOUNTED
MTG	MOUNTING
MTS	MANUAL TRANSFER SWITCH

ABBREVIATIONS	
NC or N.C.	NORMALLY CLOSED
NF	NON-FUSED
NO or N.O.	NORMALLY OPEN OR NUMBER
NO.	NUMBER
OD	OUTSIDE DIAMETER
OHE	OVERHEAD ELECTRIC
OL	OVERLOAD
OLX	OVERLOAD CONTROL RELAY
P	POLE
PB	PULL BOX OR PUSH BUTTON
PC	PHOTOCELL
PCC	PUMP CONTROL CONSOLE
PFR	PHASE FAILURE RELAY
PH	PHASE
PL.	PLATE
PLC	PROGRAMMABLE LOGIC CONTROLLER
PPR	PHASE PROTECTIVE RELAY
PR.	PAIR OR PAIR CABLE
PT	POTENTIAL TRANSFORMER
PTT	PUSH TO TEST TYPE
PVC	POLYVINYL CHLORIDE
QTY	QUANTITY
RC	REMOTE CONTROL
RCP	RELAY CONTROL PANEL
REC.	CIRCUIT RECLOSURE
RECP	RECEPTACLES
REQD.	REQUIRED
RTD	RESISTANCE TEMPERATURE DETECTOR
RTU	REMOTE TERMINAL UNIT
SC	SURGE CAPACITOR
SCH	SCHEMATIC
SCTB	SHORT CIRCUIT TERMINAL BLOCK
SEC	SECONDS OR SECONDARY
SHLD. OR SH	SHIELD OR SHIELDED
SHT	SHEET
SN OR S/N	SOLID NEUTRAL
SPD	SURGE PROTECTION DEVICES
SSRVS	SOLID-STATE REDUCED VOLTAGE STARTER
SS	STAINLESS STEEL
ST	STARTER
STA.	STATION
STC	SIGNAL TERMINATION CABINET
SV	SOLENOID VALVE
SW	SWITCH
SWGR	SWITCHGEAR
TC	TERMINATION CABINET OR TRAY CABLE
TEL	TELEPHONE
TO	TIME DELAY ON OPENING
TR.	TRIAD
TS	TEMPERATURE SWITCH
TW	TWISTED
TYP	TYPICAL
UG	UNDERGROUND
UPS	UNINTERRUPTIBLE POWER SUPPLY
UTP	UNSHIELDED TWISTED PAIR CABLE
V	VOLTS
VAR.	VARIABLE
VFD	VARIABLE FREQUENCY DRIVE
VFI	VACUUM FAULT INTERUPTER
VO	VALVE OPERATOR
W	WITH, WIRE OR WATT
WP	WEATHERPROOF
WR	WEATHER RESISTANT
XFMR	TRANSFORMER
XMTR	TRANSMITTER
XP	EXPLOSION PROOF

NOTE:
THIS IS A STANDARD LEGEND. THEREFORE, NOT ALL OF THIS INFORMATION MAY BE USED ON THIS PROJECT.

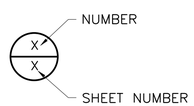

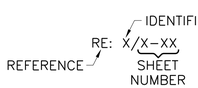

PLAN SYMBOL	DESCRIPTION
b A	LIGHTING FIXTURE "A" – FIXTURE TYPE "b" – SWITCH NUMBER
A	EMERGENCY BATTERY PACK LIGHT FIXTURE "A" – FIXTURE TYPE
X	CEILING MOUNTED EXIT SIGN "X" – FIXTURE TYPE
X	WALL MOUNTED EXIT SIGN ARROW INDICATES DIRECTION OF EGRESS "X" – FIXTURE TYPE
FACP	FIRE ALARM CONTROL PANEL
F	MANUAL PULL STATION
	CEILING MOUNTED STROBE
	WALL MOUNTED STROBE
	SMOKE DETECTOR
	HEAT DETECTOR
	HORN
	COMBINATION STROBE/HORN
	CONDUIT, EXPOSED/SURFACE MOUNTED
	CONDUIT OR DUCTBANK, CONCEALED
	CONDUIT, EXPOSED/SURFACE MOUNTED, TURNING UP
	CONDUIT, EXPOSED/SURFACE MOUNTED, TURNING DOWN
	CONDUIT STUBBED OUT AND CAPPED
OHE	OVERHEAD ELECTRIC LINE
UGE	UNDERGROUND ELECTRIC LINE
OHP	OVERHEAD PRIMARY LINE
UGP	UNDERGROUND PRIMARY LINE
OHS	OVERHEAD SECONDARY LINE
UGS	UNDERGROUND SECONDARY LINE
OHC	OVERHEAD COMMUNICATION LINE
UGC	UNDERGROUND COMMUNICATION LINE
OHFO	OVERHEAD FIBER OPTIC LINE
UGFO	UNDERGROUND FIBER OPTIC LINE
	FLEXIBLE METAL CONDUIT
	HEAT TRACE
2(3 #3/0, #2G., 3"C.)	DENOTES A QUANTITY OF TWO (2) 3-INCH CONDUITS EACH CONTAINING THREE NO. 3/0 AWG CONDUCTORS AND ONE NO.2 AWG GROUND CONDUCTOR
2-2/C#16	DENOTES A QUANTITY OF TWO INSTRUMENT CABLES. EACH CONSISTS OF TWO NO.16 AWG CONDUCTORS
3-4"C	THREE 4-INCH CONDUITS
MC1-XXX 4 #14, #14G., ¾"C (2#14 SPARE)	CABLE TAG FOUR #14 CONTROL OR POWER CONDUCTORS, ONE #14 GROUND CONDUCTOR. ALL CONDUCTORS IN A ¾" CONDUIT. TWO OF THE FOUR #14 CONTROL OR POWER CONDUCTORS ARE SPARE.
LA-1,3	HOMERUN, CIRCUITS 1 AND 3 RUN TO PANEL LA 2 #12, #12G., ¾"C. UNLESS NOTED OTHERWISE
$b	SINGLE POLE SWITCH "b" – INDICATES SWITCH LEG SHALL CONTROL LIGHT FIXTURES WITH "b" – DESIGNATION
$Xc	MULTI POLE SWITCH "x" – INDICATES NUMBER OF POLE "c" – INDICATES SWITCH SHALL CONTROL LIGHT FIXTURES WITH "c" DESIGNATION
$M	MANUAL MOTOR STARTER /DISCONNECT
$3	3 WAY SWITCH
$4	4 WAY SWITCH
2 $OS	OCCUPANCY SENSOR, MANUAL ON/AUTO OFF
$OS3	3 WAY OCCUPANCY SENSOR, MANUAL ON/AUTO OFF
$OS4	4 WAY OCCUPANCY SENSOR, MANUAL ON/AUTO OFF
*	DUPLEX RECEPTACLE, 20A, 120V, 2P, 3W *"C" – MOUNTED ABOVE COUNTERTOP "GFI" OR "GF" – GROUND FAULT INTERRUPTER TYPE "WP" – WEATHERPROOF
	SIMPLEX RECEPTACLE, GROUNDED TYPE
	QUADPLEX RECEPTACLE

PLAN SYMBOL	DESCRIPTION
J	JUNCTION BOX
PB	PULL BOX
TC	TERMINAL CABINET
OS	OCCUPANCY SENSOR
PC	PHOTOCELL
PW	PREWIRED
MH	MANHOLE
M	UTILITY METER
M	MOTORIZED LOUVER
DAMP	INDICATES THAT ALL ELECTRICAL EQUIPMENT AND MATERIALS INSTALLED WITHIN THE ROOM OR AREA IN WHICH THIS NOTATION APPEARS SHALL BE OF NEMA 12 CONSTRUCTION UNLESS OTHERWISE NOTED
WET	INDICATES THAT ALL ELECTRICAL EQUIPMENT AND MATERIALS INSTALLED WITHIN THE ROOM OR AREA IN WHICH THIS NOTATION APPEARS SHALL BE OF NEMA 4 CONSTRUCTION UNLESS OTHERWISE NOTED
CORROSIVE	INDICATES THAT ALL ELECTRICAL EQUIPMENT AND MATERIALS INSTALLED WITHIN THE ROOM OR AREA IN WHICH THIS NOTATION APPEARS SHALL BE OF NEMA 4X CONSTRUCTION UNLESS OTHERWISE NOTED
CLASS I, DIV.1, GROUP D	INDICATES THAT ALL ELECTRICAL EQUIPMENT AND MATERIALS INSTALLED WITHIN THE ROOM OR AREA IN WHICH THIS NOTATION APPEARS SHALL CONFORM TO N.E.C REQUIREMENTS FOR THE HAZARDOUS AREA CLASSIFICATION SHOWN

ONE-LINE OR CONTROL DIAGRAM	PLAN	DESCRIPTION
	OR	PANEL
5	M	MOTOR, NUMBER DESIGNATES HORSEPOWER
VM *	-	VOLTMETER (WITH SWITCH IF 3-PHASE)
AM *	-	AMMETER (WITH SWITCH IF 3-PHASE)
*	-	METER *WM – WATTMETER WHM – WATTHOUR METER WHDM – WATTHOUR DEMAND METER WHDR – WATTHOUR DEMAND RECORDER PF – POWER FACTOR METER ETM – ELAPSED TIME METER TRANSDUCER AX – CURRENT TRANSDUCER WX – WATT TRANSDUCER
#	-	RELAY, NO. AS INDICATED 25 – SYNCHRONISM CHECK RELAY 27 – UNDER VOLTAGE RELAY 38 – BEARING PROTECTIVE DEVICE 40 – LOSS OF EXCITATION RELAY 42 – RUNNING CONTACTOR/PILOT RELAY 46 – REVERSE PHASE/PHASE BALANCE/CURRENT RELAY 47 – PHASE SEQUENCE VOLTAGE RELAY 48 – MACHINE OR TRANSFORMER THERMAL RELAY 50 – INSTANTANEOUS OVERCURRENT RELAY 50G – INSTANTANEOUS GROUND 51 – TIME OVER CURRENT RELAY, GROUNDING RESISTOR TYPE 51N – TIME OVERCURRENT RELAY, RESIDUAL TYPE 51V – TIME OVERCURRENT RELAY WITH VOLTAGE RESTRAINT 59 – OVER VOLTAGE RELAY 60 – NEGATIVE SEQUENCE VOLTAGE RELAY 62 – TIME DELAY RELAY 63 – OVER PRESSURE RELAY 67 – AC DIRECTIONAL OVERCURRENT RELAY 83 – AUTOMATIC SELECTIVE CONTROL OR TRANSFER RELAY 86 – LOCKING-OUT RELAY 87 – DIFFERENTIAL PROTECTIVE RELAY B – SUFFIX INDICATES "BUS" G – SUFFIX INDICATES "GENERATOR" GF – GROUND FAULT IR – INTERPOSING RELAY PFR – PHASE FAILURE, PHASE REVERSAL, UNDERVOLTAGE, OVERVOLTAGE RELAY ST – SHUNT TRIP T – SUFFIX INDICATES "TRANSFORMER" TRP CAP – CAPACITOR TRIP X – SUFFIX INDICATES "AUXILIARY"

This Record Drawing is a combination of the sealed engineering plans and specifications for this project, modified by information furnished by the contractor reflecting changes in the project made during construction. These original sealed drawings are on file at the offices of FREESE AND NICHOLS, INC.
RECORD DRAWINGS PREPARED ON: 06/24/20

Freese and Nichols, Inc.
Texas Registered Engineering Firm F-2144

THE SEAL INK ORIGINALLY APPEARED ON THIS DOCUMENT WAS AUTHORIZED BY JOHN M.P. MANNING, P.E.
ALTERATION OF A SEALED DOCUMENT WITHOUT PROPER AUTHORIZATION AND/OR ADDITION OF A FICTITIOUS SEAL IS AN OFFENSE UNDER THE TEXAS ENGINEERING PRACTICE ACT.

FREESE NICHOLS
4040 Broadway Street, Suite 600
San Antonio, Texas 78209-6350
Phone (210) 298-3800
Fax (210) 298-3801
Web – www.freese.com

CITY OF CASTROVILLE
WWTP CAPACITY EXPANSION PROJECT
ELECTRICAL
LEGEND I

NO.	ISSUE	BY	DATE
	RECORD DRAWING	JWM	06/24/20
	PCM No.5	GTN	04/18/17
	ISSUED FOR CONSTRUCTION	JWM	11/18/16

VERIFY SCALE Bar is one inch on original drawing. If not one inch on this sheet, adjust scale.
0 1"

F&N JOB NO. CVL14259 | DATE 6/10/16 | DESIGNED JWM | DRAWN JWM | CHECKED TWZ | FILE NAME EL-ALL-OA-LGND01.dwg

SHEET E-1
SEQ.

ACAD Rel: 23.0s (LMS Tech)
Filename: N:\ELEC\EL-ALL-OA-LGND01.dwg
Last Saved: 6/22/2020 3:33 PM Saved By: 03823

Plot Date: 6/23/2020 9:44 AM Plot By: 03823 Filename: N:\ELEC\EL-ALL-OA-LGND01.dwg

ONE-LINE OR CONTROL DIAGRAM	PLAN	DESCRIPTION
CR#	–	AC INDUSTRIAL CONTROL RELAY COIL, # – NUMBER AS INDICATED
M#	–	MOTOR STARTER COIL, # – NUMBER AS INDICATED
✳	–	SPECIAL CAPACITOR ✳ SC – SURGE CAPACITOR PF – POWER FACTOR CORRECTION CAPACITOR
	–	PUSH BUTTON, MOMENTARY CONTACT, SPRING RETURN, NORMALLY CLOSED
	–	PUSH BUTTON, MOMENTARY CONTACT, SPRING RETURN, NORMALLY OPEN
	–	EMERGENCY STOP PUSH BUTTON WITH RED MUSHROOM HEAD OPERATOR (MAINTAINED CONTACT)
OFF ON	–	OFF/ON SELECTOR SWITCH
A B C X00 00X	–	3 POSITION SELECTOR SWITCH, MAINTAINED CONTACT O–OPEN X–CLOSED (A/B/C) HOA – HAND/OFF/AUTO HOR – HAND/OFF/REMOTE LOR – LOCAL/OFF/REMOTE OCS – OPEN/CLOSE/STOP OOA – ON/OFF/AUTO NOTE: 2 POSITION MULTI–CONTACT SWITCH FOLLOWS SAME CONVENTION
PTT ✳	–	INDICATING LAMP, COLOR INDICATED ✳ R – RED G – GREEN B – BLUE W – WHITE A – AMBER O – ORANGE PTT – PUSH TO TEST
52	–	MEDIUM VOLTAGE DRAWOUT TYPE POWER CIRCUIT BREAKER
AF AT A P	CB	LOW VOLTAGE CIRCUIT BREAKER, 3 POLE UNLESS OTHERWISE NOTED A – AMP TRIP, P – POLES
MCP		MOTOR CIRCUIT PROTECTOR
MCP ✳ Sz#	⊠	COMBINATION MOTOR CIRCUIT PROTECTOR AND MAGNETIC MOTOR STARTER, FULL VOLTAGE NON–REVERSING UNLESS OTHERWISE NOTED: ✳FVR – FULL VOLTAGE REVERSING FVNR – FULL VOLTAGE, NON REVERSING RVNR – REDUCED VOLTAGE NON–REVERSING 2S1W – TWO SPEED, ONE WINDING 2S2W – TWO SPEED, TWO WINDING Sz# – NEMA SIZE OF STARTER
✳	□	NON–FUSIBLE DISCONNECT SWITCH, 600 VOLT, 3 POLE ✳ AMPERE RATING NOTED
✳ ✸	◪	FUSIBLE DISCONNECT SWITCH, 600 VOLT, 3 POLE, AMPERE RATING AND FUSE SIZE AS NOTED ✳ AMPERE RATING NOTED ✸ FUSE RATING
	–	DRAWOUT TYPE EQUIPMENT OR DEVICE
	–	MEDIUM VOLTAGE CABLE TERMINATION
	–	MEDIUM VOLTAGE AIR INTERRUPTER SWITCH
	–	MEDIUM VOLTAGE FUSED AIR INTERRUPTER SWITCH
	–	MEDIUM VOLTAGE FUSED MOTOR CONTROLLER FUSED CONTACTOR DRAWOUT TYPE
VAC	–	VACUUM CONTACTOR
	–	SPEED POTENTIOMETER

ONE-LINE OR CONTROL DIAGRAM	PLAN	DESCRIPTION
TR#	–	TIMING RELAY RANGE AS NOTED, SET POINT AS NOTED #–NUMBER AS INDICATED TDD–TIME DELAY AFTER DE–ENERGIZATION–OFF DELAY TDE–TIME DELAY AFTER ENERGIZATION–ON DELAY
		NOTC–NORMALLY OPEN, TIMED CLOSING WHEN ENERGIZED
		NCTO–NORMALLY CLOSED, TIMED OPENING WHEN ENERGIZED
		NOTO–NORMALLY OPEN, TIMED OPENING WHEN DE–ENERGIZED
		NCTC–NORMALLY CLOSED, TIMED CLOSING WHEN DE–ENERGIZED
✳–##	✳–## ⊗	FIELD INSTRUMENT, TAG NO. OR LOOP NO. AS INDICATED ✳ – INDICATES INSTRUMENT TYPE DEFINED ON LOOP SHEETS ## – INDICATES LOOP NO.
	OR ⊗	LIQUID LEVEL (FLOAT) SWITCH NORMALLY CLOSED, OPENS ON FALLING LEVEL
		NORMALLY OPEN, CLOSES ON FALLING LEVEL
		NORMALLY CLOSED, OPENS ON RISING LEVEL
		NORMALLY OPEN, CLOSES ON RISING LEVEL
	PS OR ⊗	PRESSURE OR VACUUM SWITCH NORMALLY OPEN, CLOSES ON RISING PRESSURE
		NORMALLY CLOSED, OPENS ON RISING PRESSURE
		NORMALLY OPEN, CLOSES ON DROPPING PRESSURE
		NORMALLY CLOSED, OPENS ON DROPPING PRESSURE
	Ⓣ OR TS OR ⊗	TEMPERATURE SWITCH OR THERMOSTAT NORMALLY OPEN, CLOSES ON RISING TEMPERATURE
		NORMALLY OPEN, CLOSES ON DROPPING TEMPERATURE
		NORMALLY CLOSED, OPENS ON RISING TEMPERATURE
		NORMALLY CLOSED, OPENS ON DROPPING TEMPERATURE
	FS OR ⊗	FLOW SWITCH (AIR, WATER, ETC.) NORMALLY OPEN, CLOSES ON INCREASED FLOW
		NORMALLY CLOSED, OPENS ON INCREASED FLOW
	ZS OR ⊗	POSITION (LIMIT) SWITCH NORMALLY OPEN
		NORMALLY OPEN – HELD CLOSED
		NORMALLY CLOSED
		NORMALLY CLOSED – HELD OPEN
	TQ OR ⊗	TORQUE SWITCH NORMALLY CLOSED, OPENS ON HIGH TORQUE
	T	TRANSFORMER, RATINGS AND CONNECTIONS AS NOTED
#CT'S A	–	CURRENT TRANSFORMER # – QUANTITY A – RATIO
#PT'S	–	POTENTIAL TRANSFORMER # – QUANTITY
#CT'S A	–	GROUND CURRENT SENSOR TRANSFORMER # – QUANTITY A – RATIO
	–	CONTROL TRANSFORMER
	–	CONTROL POWER TRANSFORMER
Y OR G	–	GENERATOR, RATINGS AND CONNECTIONS AS NOTED
#A ATS–1 N S	–	TRANSFER SWITCH ATS – AUTOMATIC TRANSFER SWITCH MTS – MANUAL TRANSFER SWITCH "N" INDICATES NORMAL SOURCE "S" INDICATES STANDBY SOURCE #A INDICATES CONTINUOUS CURRENT RATING
	–	MOTOR OVERLOAD OVERLOAD RELAY HEATER

SYMBOL	DESCRIPTION
▽	DATA
▼	TELEPHONE
▼	COMBINATION TELEPHONE/DATA
▼	FLOOR MOUNTED DATA OUTLET
▼	FLOOR MOUNTED TELEPHONE OUTLET
▼	POKE–THRU DEVICE COMBINATION POWER/DATA/VOICE OUTLET
▽	FLOOR COMBINATION POWER/DATA/VOICE OUTLET
▽	CATV
✳	SECURITY CAMERA ✳ F – FIXED Z – PAN/TILT/ZOOM
##	SECURITY DEVICE SEC – SECURITY PANEL MAG – MAGNETIC LOCK CR – CARD READERS DR – REMOTE DOOR RELEASE MD – MOTION DETECTOR SK – SECURITY KEYPAD ES – ELECTRIC STRIKE DS – DOOR SWITCH IC – INTERCOM STATION SB – SECURITY PANIC BUTTON

ONE-LINE OR CONTROL DIAGRAM	PLAN	DESCRIPTION
	–	CONDUCTORS OR CONDUITS CROSSING PATHS BUT NOT CONNECTED
	–	CONDUCTORS ELECTRICALLY CONNECTED
	–	INDICATES LIMITS OF EQUIPMENT OR WIRING ENCLOSURE
LA	–	LIGHTNING ARRESTER
	⊙G	GROUND ROD
	◎	GROUND ROD TEST WELL
30A	–	FUSE, AMPERE RATING AS NOTED
	–	HEATER
	–	INDUCTOR
	–	CONTACT, NORMALLY OPEN (NO)
	–	CONTACT, NORMALLY CLOSED (NC)
OL	–	OVERLOAD CONTACT
K	–	KIRK KEY INTERLOCK
	–	MECHANICAL INTERLOCK
	–	TERMINAL
	–	NODE
TB	–	TERMINAL OR TEST BLOCK
OR	–	PUSH BUTTON STATION, REFER TO ELECTRICAL SCHEMATIC FOR NUMBER OF DEVICES.
	–	LOCATED AT SCADA RTU
	–	LOCATED REMOTE
	–	LOCATED AT MOTOR
	–	FUSED SWITCH/FUSED CUTOUT
Ⓜ	Ⓜ	UTILITY METER

This Record Drawing is a combination of the sealed engineering construction plans for this project, modified by information furnished by the contractor reflecting changes in the project during construction. Please refer to original sealed drawings are on file at the offices of

FREESE AND NICHOLS, INC.

RECORD DRAWINGS PREPARED ON:
06/24/20

NOTE:
THIS IS A STANDARD LEGEND. THEREFORE, NOT ALL OF THIS INFORMATION MAY BE USED ON THIS PROJECT.

Freese and Nichols, Inc.
Texas Registered Engineering Firm F-2144

FREESE AND NICHOLS
4040 Broadway Street, Suite 600
San Antonio, Texas 78209-6350
Phone (210) 298-3800
Fax (210) 298-3801
Web – www.freese.com

THE SEAL INK ORIGINALLY APPEARED ON THIS DOCUMENT WAS AUTHORIZED BY JOHN W. MANNING, P.E.
ON 6/24/2020 IT IS NOT TO BE USED FOR ANY REVISIONS OR ALTERATION TO THIS SEALED DOCUMENT WITHOUT PROPER AUTHORIZATION AND THE CONSENT OF THE AUTHOR. IT IS A VIOLATION OF THE TEXAS ENGINEERING PRACTICE ACT TO ALTER THIS SEALED DOCUMENT WITHOUT PROPER AUTHORIZATION AND THE CONSENT OF THE AUTHOR. IT IS A VIOLATION OF THE TEXAS ENGINEERING PRACTICE ACT

CITY OF CASTROVILLE

WWTP CAPACITY EXPANSION PROJECT

ELECTRICAL

LEGEND II

NO.	ISSUE	BY	DATE
1	RECORD DRAWING	JWM	06/24/20
0	ISSUED FOR CONSTRUCTION	JWM	11/18/16

VERIFY SCALE Bar is one inch on original drawing. If not one inch on this sheet, adjust scale.
0 1"

F&N JOB NO.	DATE	DESIGNED	DRAWN	REVISED	CHECKED
CVL14259	6/10/16	JWM	JWM		TWZ

FILE NAME: EL-ALL-OA-LGND02.dwg

SHEET E-2

SEQ.

ACAD Rel: 23.0s (LMS Tech)
Filename: N:\ELEC\EL-ALL-OA-LGND02.dwg
Last Saved: 6/22/2020 4:00 PM Saved By: 03823

Plot Date: 6/23/2020 9:44 AM Plot By: 03823 Filename: N:\ELEC\EL-ALL-OA-LGND02.dwg

GENERAL NOTES:

1. CONTRACTOR REQUIRED TO MAINTAIN POWER TO EQUIPMENT DURING CONSTRUCTION. CONTRACTOR REQUIRED TO PROVIDE AND COORDINATE TEMPORARY POWER DURING CONSTRUCTION SEQUENCING TO KEEP EQUIPMENT OPERATIONAL.
2. POWER TO EQUIPMENT BEING DEMOLISHED INCLUDES REMOVING CONDUIT AND CONDUCTORS BACK TO SOURCE.

NOTES BY SYMBOL "⬡"

1. EXISTING EQUIPMENT RACK WITH POWER DROP SHALL REMAIN IN SERVICE UNTIL PROPOSED EQUIPMENT IS OPERATIONAL AND PLACED IN SERVICE.
2. EXISTING 120KW GENERATOR SHALL BE DEMOLISHED.
3. EXISTING MCC AND AUTOMATIC TRANSFER SWITCH IS LOCATED INSIDE BUILDING. CONTRACTOR SHALL COORDINATE CONSTRUCTION SEQUENCING WITH DEMOLITION OF ATS AND MCC.
4. EXISTING SERVICE ENTRANCE DISCONNECT SHALL BE DEMOLISHED AFTER NEW SERVICE IS PROVIDED TO THE PROPOSED BUILDING.
5. EXISTING WELL PUMP ELECTRICAL SERVICE DROP SHALL REMAIN IN SERVICE TILL NEW SERVICE IS PROVIDED.
6. POWER TO EXISTING AERATORS FROM MCC SHALL BE DEMOLISHED. CONTRACTOR SHALL COORDINATE CONSTRUCTION SEQUENCING TO MAINTAIN POWER TO EQUIPMENT WHILE REQUIRED.
7. POWER TO CLARIFIER SHALL BE DEMOLISHED. CONTRACTOR SHALL COORDINATE CONSTRUCTION SEQUENCING TO MAINTAIN POWER TO EQUIPMENT WHILE REQUIRED.
8. POWER TO SLUDGE PUMPS SHALL BE DEMOLISHED. CONTRACTOR SHALL COORDINATE CONSTRUCTION SEQUENCING TO MAINTAIN POWER TO EQUIPMENT WHILE REQUIRED.
9. POWER TO LIFT STATION SHALL BE DEMOLISHED. CONTRACTOR SHALL COORDINATE CONSTRUCTION SEQUENCING TO MAINTAIN POWER TO EQUIPMENT WHILE REQUIRED.

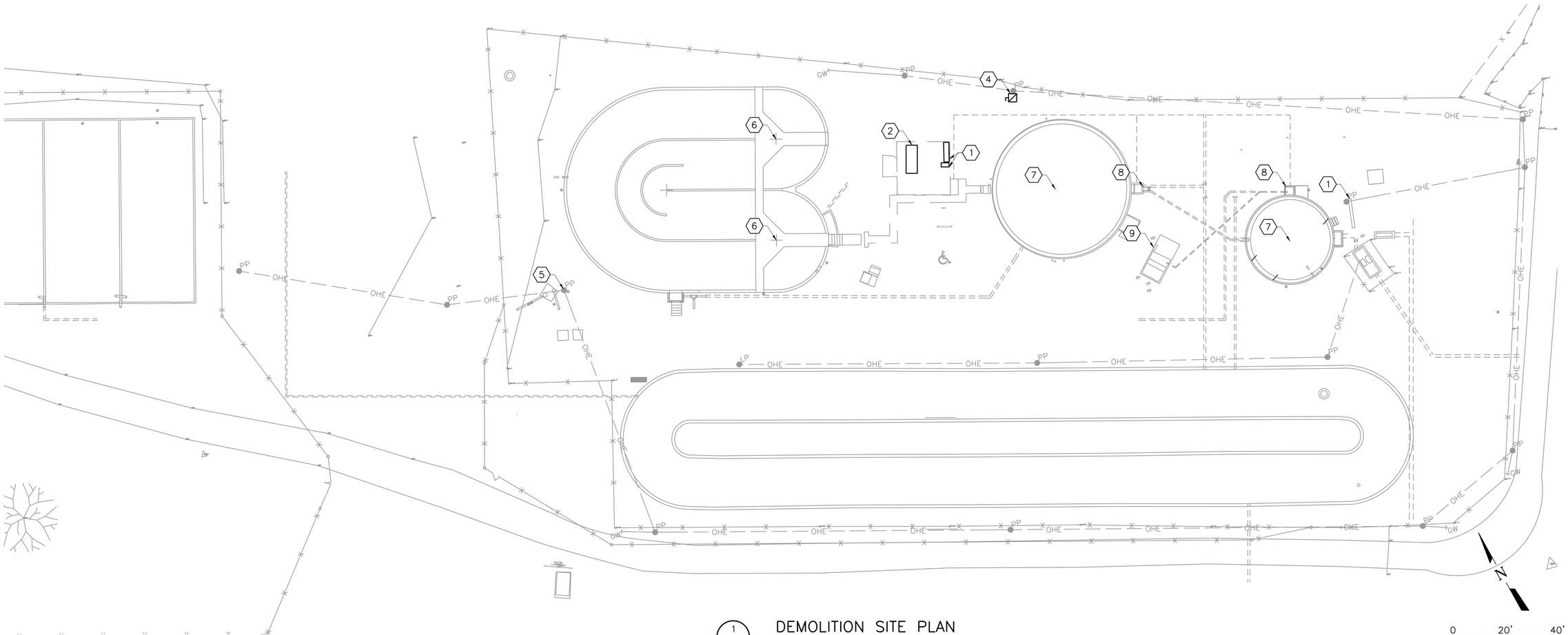

1 DEMOLITION SITE PLAN
1"=20'

This Record Drawing is a combination of the sealed engineering contract drawings for this project, modified by information furnished by the contractor reflecting changes in the Project made during construction. The original sealed drawings are on file at the offices of FREESE AND NICHOLS, INC.
RECORD DRAWINGS PREPARED ON: 06/24/20

Freese and Nichols, Inc.
Texas Registered Engineering Firm F-2144

THE SEAL THAT ORIGINALLY APPEARED ON THIS DOCUMENT WAS AUTHORIZED BY JOHN M.P. MANNING, P.E. TEXAS NO. 92724 ON 06/10/2016. ALTERATION OF A SEALED DOCUMENT WITHOUT PROPER NOTIFICATION OF THE RESPONSIBLE ENGINEER IS AN OFFENSE UNDER THE TEXAS ENGINEERING PRACTICE ACT.

FREESE AND NICHOLS
4040 Broadway Street, Suite 600
San Antonio, Texas 78209-6350
Phone - (210) 298-3800
Fax - (210) 298-3801
Web - www.freese.com

CITY OF CASTROVILLE
WWTP CAPACITY EXPANSION PROJECT
ELECTRICAL
DEMOLITION SITE PLAN

NO.	ISSUE	BY	DATE
2	RECORD DRAWING	JWM	06/24/20
1	ISSUED FOR CONSTRUCTION	JWM	11/18/16

VERIFY SCALE Bar is one inch on original drawing. If not one inch on this sheet, adjust scale.

F&N JOB NO. CVL14259
DATE 6/10/16
DESIGNED JWM
DRAWN JWM
REVISED
CHECKED TWZ
FILE NAME EL-ALL-EX-DEMO.dwg

SHEET E-3
SEQ.

ACAD Rel: 23.0s (LMS Tech)
Filename: N:\ELEC\EL-ALL-EX-DEMO.dwg
Last Saved: 6/22/2020 3:34 PM Saved By: 03823

Plot Date: 6/23/2020 9:45 AM Plot By: 03823 Filename: N:\ELEC\EL-ALL-EX-DEMO.dwg

NOTES BY SYMBOL "⬡"

1. LOCATION OF EXISTING RAS/WAS PUMP STATION. CONTRACTOR SHALL TERMINATE CONDUITS IN LOCATION OF EXISTING PENETRATIONS THROUGH CONTROL PANEL.
2. RE: 1/E-18 FOR ADDITIONAL WORK IN THIS AREA.
3. APPROXIMATE LOCATION OF EXISTING PULL BOX FOR DUCT BANK TO OFFSITE LIFT STATION. CONTRACTOR SHALL PROVIDE CONDUIT FROM MCC TO EXISTING PULLBOX.
4. TERMINATE CONDUIT AND CONDUCTORS TO EXISTING RACEWAY FOR WELL PUMPS. PROVIDE INSULATED POLARIS IN-LINE SPLICER.

GENERAL NOTES:

1. POWER, ANALOG, AND DISCRETE CONDUCTORS SHALL BE ROUTED IN SEPARATE CONDUITS.
2. CONDUIT ROUTES INDICATED ARE APPROXIMATE AND MAY REQUIRE MODIFICATIONS BASED ON ACTUAL CONDITIONS.
3. CONTRACTOR IS RESPONSIBLE TO SIZE PULL BOXES AND MANHOLES PER LATEST NEC REQUIREMENTS.
4. CONTRACTOR RESPONSIBLE TO COORDINATE WITH UTILITY COMPANY FOR TEMPORARY POWER, POWER POLE REQUIREMENTS, REQUIRED SWEEPS, AND INSPECTIONS PRIOR TO BIDDING.
5. PARALLEL POWER AND CONTROL DUCTBANKS SHALL BE SEPARATED BY AT LEAST 12" FROM OUTSIDE EDGES OF CONDUIT SPACERS.

This Record Drawing is a combination of the sealed engineering contract drawings for this project, modified by information furnished by the contractor reflecting changes in the Project made during construction. The original sealed drawings are on file at the offices of FREESE AND NICHOLS, INC.
RECORD DRAWINGS PREPARED ON: 06/24/20

Freese and Nichols, Inc.
Texas Registered Engineering Firm F-2144

THE SEAL THAT ORIGINALLY APPEARED ON THIS DOCUMENT WAS AUTHORIZED BY JOHN W.P. MANNING, P.E. TEXAS NO. 95784 ON 06/10/2016 ALTERATION OF A SEALED DOCUMENT WITHOUT PROPER NOTIFICATION OF THE RESPONSIBLE ENGINEER IS AN OFFENSE UNDER THE TEXAS ENGINEERING PRACTICE ACT.

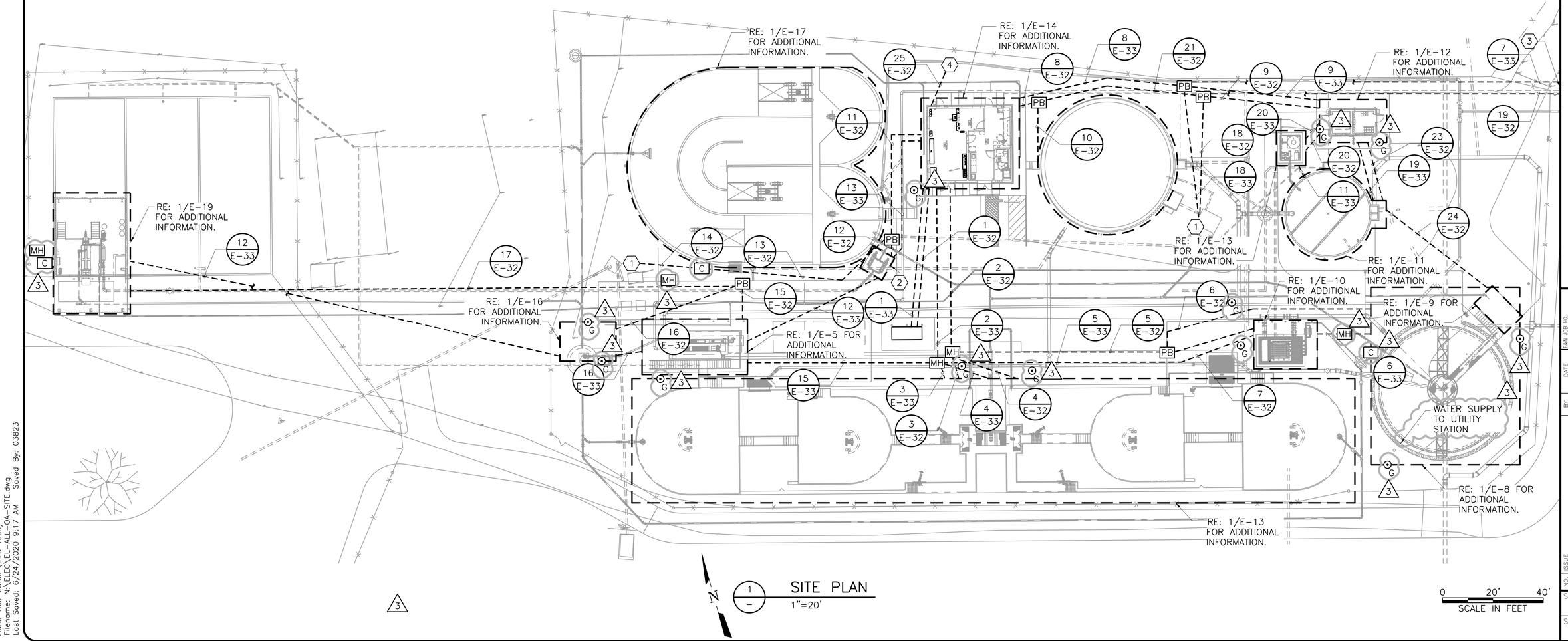

1 SITE PLAN
1"=20'

FREESE AND NICHOLS
4040 Broadway Street, Suite 600
San Antonio, Texas 78209-6350
Phone - (210) 298-3800
Fax - (210) 298-3801
Web - www.freese.com

CITY OF CASTROVILLE
WWTP CAPACITY EXPANSION PROJECT
ELECTRICAL
SITE PLAN

NO.	ISSUE	BY	DATE
3	RECORD DRAWING	JWM	06/24/20
2	ISSUED FOR CONSTRUCTION	JWM	11/18/16
1	CA No.1	JWM	10/25/16

F&N JOB NO. CVL14259
DATE 6/10/16
DESIGNED JWM
DRAWN JWM
REVISED
CHECKED TWZ
FILE NAME EL-ALL-OA-SITE.dwg

VERIFY SCALE 0 1
Bar is one inch on original drawing. If not one inch on this sheet, adjust scale.

SHEET E-4
SEQ.

ACAD Rel: 23.0s (LMS Tech)
Filename: N:\ELEC\EL-ALL-OA-SITE.dwg
Last Saved: 6/24/2020 9:17 AM Saved By: 03823

Plot Date: 6/24/2020 9:25 AM Plot By: 03823 Filename: N:\ELEC\EL-ALL-OA-SITE.dwg

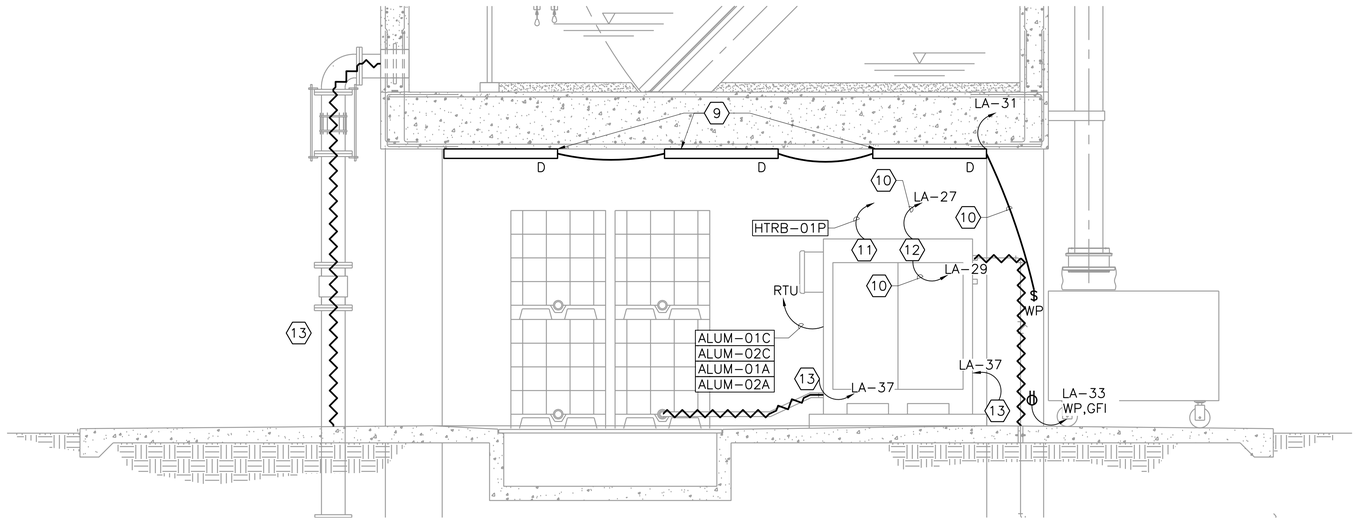

2 PARTIAL HEADWORKS AND ALUM ELEVATION VIEW
3/8" = 1'-0"

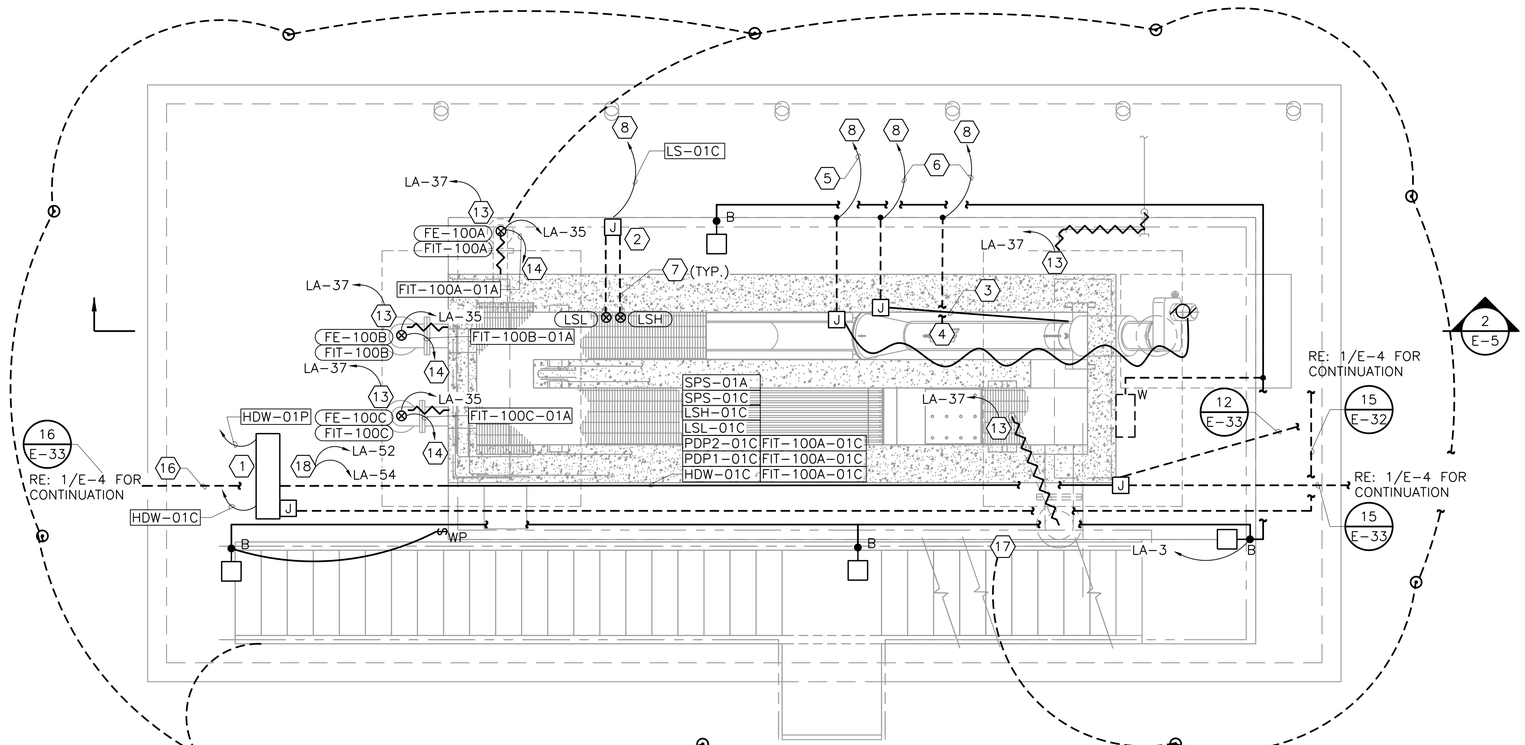

NORTH

1 HEADWORKS PLAN
3/8" = 1'-0"

GENERAL NOTES:

1. HEADWORKS STRUCTURE MATERIALS SHALL BE CLASS I, DIV.2 WITHIN A 10' ENVELOPE AROUND EQUIPMENT AND OPEN CHANNEL. ALL MATERIALS LOCATED WITHIN THIS AREA SHALL BE CLASSIFIED AS SUCH.
2. ANALOG, DISCRETE, AND POWER CONDUCTORS SHALL BE ROUTED IN SEPARATE CONDUITS.
3. CONDUIT AND CONDUCTOR COUNT AND SIZE MAY VARY. PLAN SHOWS ONE MANUFACTURERS EQUIPMENT AND ANOTHER MANUFACTURER MAY DIFFER. CONTRACTOR IS RESPONSIBLE TO VERIFY THE MANUFACTURER EQUIPMENT TO BE PROVIDED AND COORDINATE CHANGE IN SUPPLIES ACCORDINGLY.
4. ALL LIGHTING AND RECEPTACLES CIRCUITS SHALL BE 2 #10, #10G., 2"C. UNLESS INDICATED OTHERWISE.
5. JUNCTION BOXES SHALL BE SIZED BY CONTRACTOR PER NEC. CONDUCTORS SHALL BE LABELED AND JUNCTION BOX SHALL BE LABELED POWER OR CONTROLS.
6. PROVIDE LIGHTNING PROTECTION SYSTEM FOR TOP OF HEADWORKS STRUCTURE. SEE SPECIFICATION 26 41 13 LIGHTNING PROTECTION FOR STRUCTURES.
7. EXPOSED CONDUIT MAY BE RESIZED BY CONTRACTOR, BUT MUST MEET THE REQUIREMENTS OF THE LATEST VERSION OF NATIONAL ELECTRICAL CODE.

1

NOTES BY SYMBOL "⬡"

1. MANUFACTURER SUPPLIED CONTROL PANEL SHALL BE INSTALLED BY THE CONTRACTOR. PROVIDE UNISTRUT RACK WITH SUNSHADE BOLTED TO FLOOR TO SUPPORT CONTROL PANEL. RE: 2/E-18 FOR DETAILS. CONTROL PANEL OR TERMINATION CABINETS (IF REQUIRED) SHALL NOT BE LOCATED IN THE HAZARDOUS LOCATION AREAS.
2. PROVIDE UNISTRUT FOR JUNCTION BOX. CONTRACTOR SHALL BE RESPONSIBLE FOR PROVIDING CONDUIT AND CONDUCTORS FROM THE JUNCTION BOX LOCATION TO THE FINAL TERMINATION LOCATIONS. CONTRACTOR SHALL COORDINATE CONDUCTOR AND CONDUIT REQUIREMENTS WITH MANUFACTURER.
3. WASH WATER LINES SHALL BE HEAT TRACED. CONTRACTOR SHALL COORDINATE REQUIRED HEAT TRACE, CONDUIT AND CONDUCTORS WITH MANUFACTURER. PROVIDE 5W/FT SELF REGULATING HEAT TRACE WITH STAINLESS STEEL PROBE. INSTALL HEAT TRACE PER MANUFACTURER'S RECOMMENDATIONS AND COVER WITH ALUMINUM COVERED FIBERGLASS INSULATION. HEAT TRACE CONDUIT SHALL INDUCE 2 #10, #10G., 1"C. TO HEADWORKS CONTROL PANEL.
4. CONTRACTOR SHALL COORDINATE WITH EQUIPMENT SUPPLIER FOR REQUIRED CONDUIT AND CONDUCTORS FOR FINAL CONNECTION TO WASH SOLENOID VALVE(S).
5. PROVIDE 3 #12, #12G. 1"C. COORDINATE WITH SUPPLIER TO PROVIDE ADDITIONAL CONDUIT AND CONDUCTORS AS REQUIRED BY MANUFACTURER.
6. PROVIDE 2 #12, #12G. 1"C. COORDINATE WITH SUPPLIER TO PROVIDE ADDITIONAL CONDUIT AND CONDUCTORS AS REQUIRED BY MANUFACTURER.
7. CONDUITS SHALL BE ROUTED UNDERNEATH CONCRETE STRUCTURE.
8. ROUTE TO MANUFACTURER SUPPLIED CONTROL PANEL.
9. PROVIDE A TOTAL OF 6 "C" FIXTURES UNDER HEADWORKS STRUCTURE. ONLY THREE SHOWN FOR MOUNTING LOCATIONS. FIXTURES SHALL BE SURFACE MOUNTED TO STRUCTURE.
10. PROVIDE RIGID ALUMINUM CONDUIT FOR LIGHTING.
11. CONTRACTOR SHALL PROVIDE 316 STAINLESS STEEL, NEMA 4X, 30A, 3P, 600V DISCONNECT FOR ALUM PUMP HEATER BOX.
12. PROVIDE 2 #12, #12G., ¾"C. TO EACH ALUM PUMP FROM PANEL LA.
13. PROVIDE 5W/FT HEAT TRACE WITH AMBIENT TEMPERATURE SENSING CONTROLLER TO EXPOSED PIPING. PROVIDE 3 #10, #10G., ¾"C. BRING ALL HEAT TRACE TO ONE WEATHERPROOF SWITCH TO TURN THE HEATRACE ON AND OFF.
14. ROUTE TO RTU.
15. MOUNT JUNCTION BOX UNDER HEADWORKS PLATFORM. ROUTE CONDUITS BETWEEN JUNCTION BOXES UNDER PLATFORM.
16. ROUTE TO JUNCTION BOX MOUNTED NEAR SCREEN CONTROL PANEL.
17. BOND GROUNDING SYSTEM TO LOWER PORTION OF HEADWORKS STRUCTURE STEEL.
18. PROVIDE 2 #12, #12G., ¾"C FOR LIGHTS AND RECEPTACLES ON EQUIPMENT RACK.

0 1' 2' 4'
3/8"=1'-0

This Record Drawing is a combination of the sealed engineering construction documents for this project, modified by information furnished by the contractor reflecting changes in the project construction. Reproduction of the original sealed drawings are on file at the offices of FREESE AND NICHOLS, INC.
RECORD DRAWINGS PREPARED ON: 06/24/20

Freese and Nichols, Inc.
Texas Registered Engineering Firm F-2144

THE SEAL WAS ORIGINALLY AFFIXED ON THE DOCUMENT WAS AUTHORIZED BY JOHN W.P. MANNING, P.E. ALTERATION OF A SEALED DOCUMENT WITHOUT PROPER AUTHORIZATION AND ADDITIONAL SEAL MAY BE A VIOLATION OF THE TEXAS ENGINEERING PRACTICE ACT.

FREESE NICHOLS
4040 Broadway Street, Suite 600
San Antonio, Texas 78209-6350
Phone (210) 298-3800
Fax (210) 298-3801
Web – www.freese.com

CITY OF CASTROVILLE
WWTP CAPACITY EXPANSION PROJECT
ELECTRICAL
HEADWORKS

NO.	ISSUE	BY	DATE
	RECORD DRAWING	JWM	06/24/20
	ISSUED FOR CONSTRUCTION	JWM	11/18/16
	CA No.1	JWM	10/25/16

VERIFY SCALE Bar is one inch on original drawing. If not one inch on this sheet, adjust scale.
0 1"

F&N JOB NO. CVL14259
DATE 6/10/16
DESIGNED JWM
DRAWN JWM
REVISED
CHECKED TWZ
FILE NAME EL-HDW-PL-POWR.dwg

SHEET E-5
SEQ.

ACAD Rel: 23.0s (LMS Tech)
Filename: N:\ELEC\EL-HDW-PL-POWR.dwg
Last Saved: 6/22/2020 3:36 PM Saved By: 03823

Plot Date: 6/23/2020 9:47 AM Plot By: 03823 Filename: N:\ELEC\EL-HDW-PL-POWR.dwg

GENERAL NOTES:

1. BNR BASIN CLASSIFIED CLASS I, DIV.2 GROUP C AND D. CLASSIFICATION ENVELOPE EXTENDS UPWARD 18" FROM TOP OF SURFACE ELEVATION AND WALLS AND EXTENDING 18" OUT BEYOND THE EXTERIOR WALL. THE CLASSIFICATION INCLUDES AN 18" HIGH ENVELOPE AT GROUND LEVEL 10' HORIZONTALLY FROM EXTERIOR TANK WALL. ALL MATERIALS AND EQUIPMENT WITHIN THE BOUNDARIES SHALL BE CLASSIFIED FOR SUCH.
2. POWER, DISCRETE, ANALOG, AND COMMUNICATION CONDUCTORS SHALL BE ROUTED IN SEPARATE CONDUITS.
3. CONDUITS TO MOT-101,102,201,202 SHALL BE ROUTED IN SLAB. REFERENCE SHEET GS-1 FOR DETAILS.
4. PROVIDE LIGHTNING PROTECTION FOR THE BNR STRUCTURE AS INDICATED IN SPECIFICATION 26 41 13 LIGHTNING PROTECTION FOR STRUCTURES.
5. EXPOSED CONDUIT MAY BE RESIZED BY CONTRACTOR, BUT MUST MEET THE REQUIREMENTS OF THE LATEST NATIONAL ELECTRICAL CODE.

NOTES BY SYMBOL "⬡"

1. CONTRACTOR SHALL PROVIDE UNISTRUT TO MOUNT DISCONNECT.
2. CONTRACTOR SHALL VERIFY MANUFACTURER IS SUPPLYING CONDUCTORS BETWEEN THE EQUIPMENT AND THE ASSOCIATED DISCONNECT.
3. PROVIDE 2 #10, #10G., 2"C. TO BNR CONTROL PANEL. VERIFY CONDUCTOR AND CONDUIT SIZE AND REQUIREMENTS WITH MANUFACTURER PRIOR TO INSTALLATION.
4. DISCONNECT SHALL INCLUDE AUXILIARY CONTACTS TO OPEN BEFORE THE DISCONNECT OPENS.
5. ROUTE TO BNR CONTROL PANELS AS IDENTIFIED ON INTERCONNECTION DIAGRAM.
6. CONDUIT ROUTING TO EQUIPMENT ON BNR BASIN SHALL BE EMBEDDED IN TOP SLAB.
7. PROVIDE 2 #12, #12G., ¾"C. PROVIDE WEATHERPROOF SWITCH TO TURN HEATER ON/OFF.
8. CONTRACTOR SHALL PROVIDE NEMA 4X 316 STAINLESS STEEL WIREWAYS ON OUTSIDE WALL. CONDUITS FROM MANHOLE SHALL TERMINATE IN THE WIREWAY. CONDUITS SHALL BREAK OUT FROM THERE TO THE FINAL TERMINATION LOCATION. PROVIDE SEPARATE WIREWAYS FOR CONTROLS AND POWER. WIRE WAY SHALL INCLUDE 316 STAINLESS STEEL CONDUIT DRAIN AND CONDUIT TERMINATIONS SHALL INCLUDE DUCT SEAL.
9. PROVIDE GROUND ROD.
10. PROVIDE GROUND ROD WITH GROUND WELL.
11. BOND GROUND ROD TO STRUCTURAL STEEL.
12. RE: 2/E-17 FOR DETAILS ABOUT ROUTING CONDUITS ALONG THE WALKWAY.

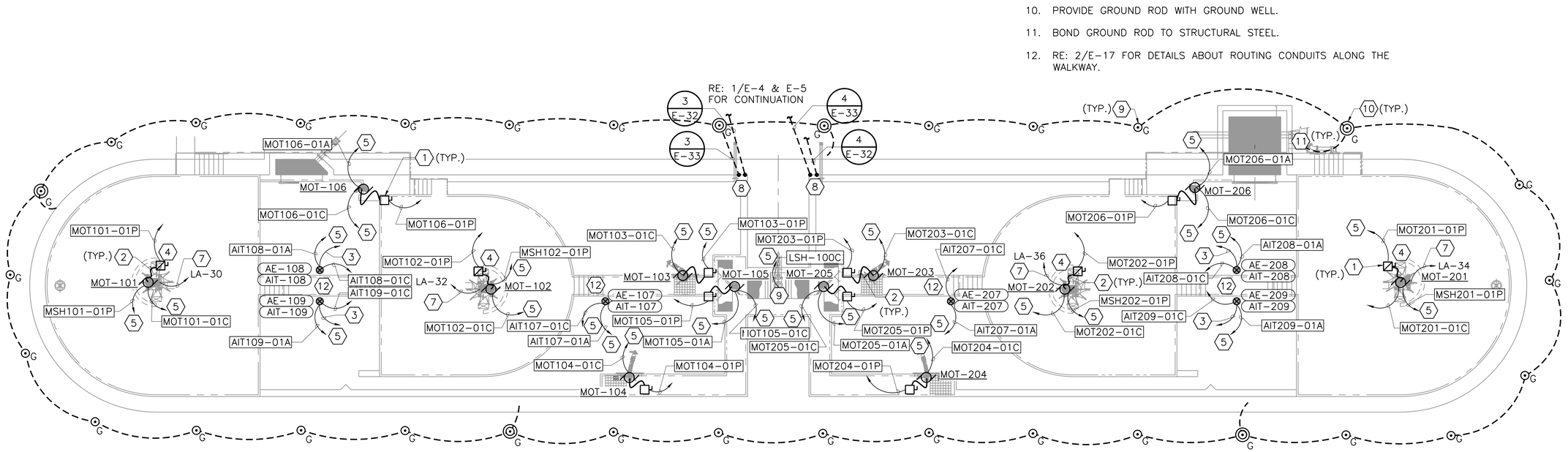

NORTH

1 — BNR BASIN POWER AND CONTROL PLAN
3/32"=1'-0"

0 4' 8' 16'
3/32"=1'-0"

This Record Drawing is a combination of the sealed engineering construction plans for this project, modified by information furnished by the contractor reflecting changes in the project made during construction. These original sealed drawings are on file at the offices of FREESE AND NICHOLS, INC.
RECORD DRAWINGS PREPARED ON: 06/24/20

Freese and Nichols, Inc.
Texas Registered Engineering Firm F-2144

THE SEAL (NAME) APPEARING ON THIS DOCUMENT WAS AUTHORIZED BY JOHN M.P. MANNING, P.E. ON 6/24/2020. IT IS A VIOLATION OF A SEALED DOCUMENT WITHOUT PROPER AUTHORIZATION OR ALTERATION OF A SEALED DOCUMENT WITHOUT PROPER AUTHORIZATION IS AN OFFENSE UNDER THE TEXAS ENGINEERING PRACTICE ACT.

FREESE NICHOLS
4040 Broadway Street, Suite 600
San Antonio, Texas 78209-6350
Phone (210) 298-3800
Fax – (210) 298-3801
Web – www.freese.com

CITY OF CASTROVILLE
WWTP CAPACITY EXPANSION PROJECT
ELECTRICAL
BNR BASIN POWER AND CONTROL PLAN

NO.	ISSUE	BY	DATE
	RECORD DRAWING	JWM	06/24/20
1	ISSUED FOR CONSTRUCTION	JWM	11/18/16
1	CA No.1	JWM	10/25/16

VERIFY SCALE Bar is one inch on original drawing. If not one inch on this sheet, adjust scale.
0 1"

P/N JOB NO.	CVL14259
DATE	6/10/16
DESIGNED	JWM
DRAWN	JWM
CHECKED	TWZ
FILE NAME	EL-BNR-PL-PWR.dwg

SHEET E-6
SEQ.

ACAD Rel: 23.0s (LMS Tech)
Filename: N:\ELEC\EL-BNR-PL-PWR.dwg
Last Saved: 6/22/2020 3:36 PM Saved By: 03823

Plot Date: 6/23/2020 9:48 AM Plot By: 03823 Filename: N:\ELEC\EL-BNR-PL-PWR.dwg

GENERAL NOTES:

1. BNR BASIN CLASSIFIED CLASS I, DIV.2 ENVELOPE EXTENDING UPWARD 18" FROM TOP OF SURFACE ELEVATION AND WALLS AND EXTENDING 18" OUT BEYOND THE EXTERIOR WALL. THE CLASSIFICATION INCLUDES AN 18" HIGH ENVELOPE 10' HORIZONTALLY FROM EXTERIOR TANK WALL. ALL MATERIALS AND EQUIPMENT WITHIN THE BOUNDARIES SHALL BE CLASSIFIED FOR SUCH.
2. POWER, DISCRETE, ANALOG, AND COMMUNICATION CONDUCTORS SHALL BE ROUTED IN SEPARATE CONDUITS.
3. ALL LIGHTING AND RECEPTACLES CIRCUITS SHALL BE 2 #10, #10G., 2"C. UNLESS INDICATED OTHERWISE.
4. EXPOSED CONDUIT MAY BE RESIZED BY CONTRACTOR, BUT MUST MEET THE REQUIREMENTS OF THE LATEST NATIONAL ELECTRICAL CODE.

1

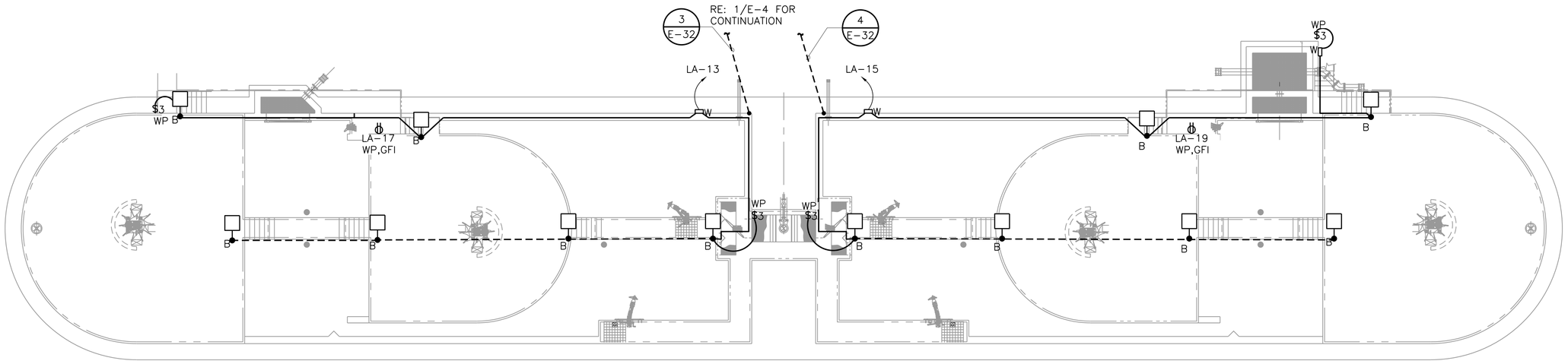

NORTH

1 / –

BNR BASINS
LIGHTING AND RECEPTACLES PLAN
3/32"=1'-0"

0 4' 8' 16'
3/32"=1'-0"

This Record Drawing is a combination of the sealed engineering contract drawings for this project, modified by information furnished by the contractor reflecting changes in the Project made during construction. The original sealed drawings are on file at the offices of FREESE AND NICHOLS, INC.
RECORD DRAWINGS PREPARED ON: 06/24/20

Freese and Nichols, Inc.
Texas Registered Engineering Firm F-2144

THE SEAL THAT ORIGINALLY APPEARED ON THIS DOCUMENT WAS AUTHORIZED BY JOHN P. MANNING, P.E. TEXAS NO. 92174 ON 06/10/2016. ALTERATION OF A SEALED DOCUMENT WITHOUT PROPER NOTIFICATION OF THE RESPONSIBLE ENGINEER IS AN OFFENSE UNDER THE TEXAS ENGINEERING PRACTICE ACT.

FREESE AND NICHOLS
4040 Broadway Street, Suite 600
San Antonio, Texas 78209-6350
Phone - (210) 298-3800
Fax - (210) 298-3801
Web - www.freese.com

CITY OF CASTROVILLE
WWTP CAPACITY EXPANSION PROJECT

ELECTRICAL
BNR BASINS
LIGHTING AND RECEPTACLES PLAN

NO.	ISSUE	BY	DATE
3	RECORD DRAWING	JWM	06/24/20
2	ISSUED FOR CONSTRUCTION	JWM	11/18/16
1	CA No.1	JWM	10/25/16

F&N JOB NO. CVL14259
DATE 6/10/16
DESIGNED JWM
DRAWN JWM
REVISED
CHECKED TWZ
FILE NAME EL-BNR-PL-LTG.dwg

VERIFY SCALE 0 1
Bar is one inch on original drawing. If not one inch on this sheet, adjust scale.

SHEET E-7
SEQ.

ACAD Rel: 23.0s (LMS Tech)
Filename: N:\ELEC\EL-BNR-PL-LTG.dwg
Last Saved: 6/22/2020 3:37 PM Saved By: 03823

Plot Date: 6/23/2020 9:48 AM Plot By: 03823 Filename: N:\ELEC\EL-BNR-PL-LTG.dwg

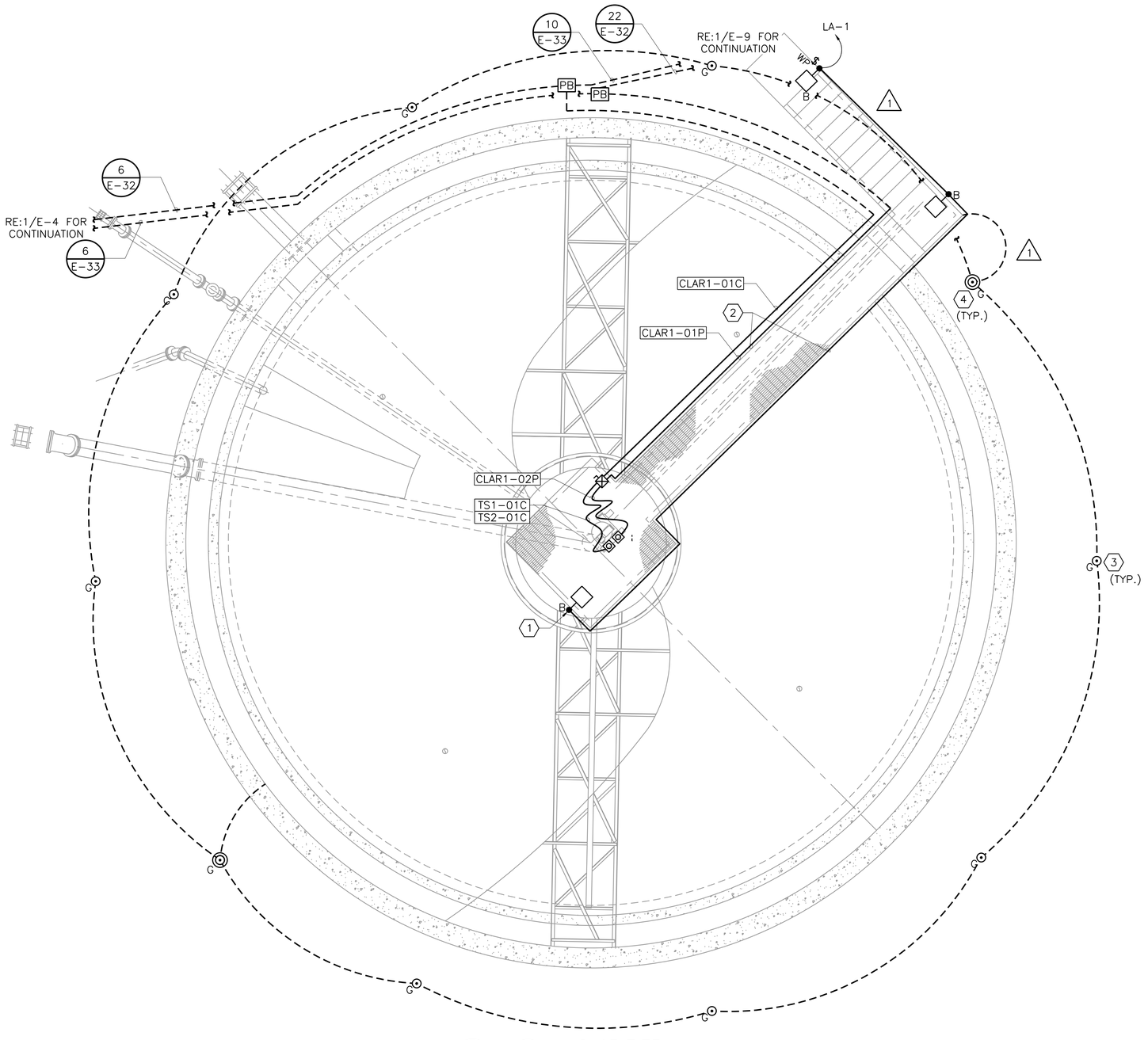

1 CLARIFIER
1/4"=1'-0"

GENERAL NOTES:

1. ANALOG, DISCRETE AND POWER CONDUCTORS SHALL BE ROUTED IN SEPARATE CONDUITS.
2. GROUND CLARIFIER TO METAL WALKWAY PER NEC.
3. EXPOSED CONDUIT MAY BE RESIZED BY CONTRACTOR, BUT MUST MEET THE REQUIREMENTS OF THE LATEST VERSION OF NATIONAL ELECTRICAL CODE.

2

NOTES BY SYMBOL "⬡"

1. RE: 1/E-30 FOR MOUNTING DETAIL.
2. SUPPORT CONDUIT ALONG WALKWAY. COORDINATE SUPPORT BRACKETS WITH MANUFACTURER.
3. PROVIDE GROUND ROD.
4. PROVIDE GROUND WELL WITH ROD.

0 1' 2' 4' 8'
1/4"=1'-0"

This Record Drawing is a combination of the sealed engineering contract drawings for this project, modified by information furnished by the contractor reflecting changes in the Project made during construction. The original sealed drawings are on file at the offices of FREESE AND NICHOLS, INC.
RECORD DRAWINGS PREPARED ON: 06/24/20

Freese and Nichols, Inc.
Texas Registered Engineering Firm F-2144

THE SEAL THAT ORIGINALLY APPEARED ON THIS DOCUMENT WAS AUTHORIZED BY JOHN W.P. MANNING, P.E. TEXAS NO. 92774 ON 06/10/2016. ALTERATION OF A SEALED DOCUMENT WITHOUT PROPER NOTIFICATION OF THE RESPONSIBLE ENGINEER IS AN OFFENSE UNDER THE TEXAS ENGINEERING PRACTICE ACT.

FREESE AND NICHOLS
4040 Broadway Street, Suite 600
San Antonio, Texas 78209-6350
Phone - (210) 298-3800
Fax - (210) 298-3801
Web - www.freese.com

CITY OF CASTROVILLE
WWTP CAPACITY EXPANSION PROJECT
ELECTRICAL
CLARIFIER

NO.	ISSUE	BY	DATE
4	RECORD DRAWING	JWM	06/24/20
3	ISSUED FOR CONSTRUCTION	JWM	11/18/16
2	CA No.1	JWM	10/25/16
1	ADDENDUM No.3	JWM	10/25/16

F&N JOB NO. CVL14259
DATE 6/10/16
DESIGNED JWM
DRAWN JWM
REVISED
CHECKED TWZ
FILE NAME EL-CLA-PL-PWR.dwg

VERIFY SCALE 0 1
Bar is one inch on original drawing. If not one inch on this sheet, adjust scale.

SHEET E-8
SEQ.

ACAD Rel: 23.0s (LMS Tech)
Filename: N:\ELEC\EL-CLA-PL-PWR.dwg
Last Saved: 6/22/2020 3:38 PM Saved By: 03823

Plot Date: 6/23/2020 9:48 AM Plot By: 03823 Filename: N:\ELEC\EL-CLA-PL-PWR.dwg

GENERAL NOTES:

1. EXPOSED CONDUIT MAY BE RESIZED BY CONTRACTOR, BUT MUST MEET THE REQUIREMENTS OF THE LATEST VERSION OF NATIONAL ELECTRICAL CODE. 1
2. FOR CONDUIT ROUTED ABOVE CONCRETE SLAB, ROUTE CONDUIT BELOW AND PARALLEL TO PROCESS PIPING TO LIMIT TRIPPING HAZARDS. PROVIDE 1⅝" 316 STAINLESS SLOTTED CHANNEL STANDOFF BRACKETS SO THAT CONDUIT DOES NOT LAY DIRECTLY ON CONCRETE SLAB.
3. REPLACE RAS PUMP MCP RATING PLUGS AND SOLID STATE OVERLOADS PER NEW PUMP MOTOR NAMEPLATE.

NOTES BY SYMBOL "⬡"

1. PROVIDE EQUIPMENT RACK FOR DISCONNECT AND CONTROL STATION. RE: 1/E-30 FOR DETAILS.
2. PROVIDE START AND STOP PUSHBUTTON CONTROL STATION. ENCLOSURE SHALL BE NEMA 4X 316 STAINLESS STEEL.
3. PROVIDE 5W/FT SELF REGULATING HEAT TRACE WITH AMBIENT TEMPERATURE SENSOR. PROVIDE WEATHERPROOF SWITCH FOR HEAT TRACE. RE: 2/E-16. REUSE THERMOSTAT AND HEAT TRACE WHERE POSSIBLE. PROVIDE NEW HEAT TRACE AND SPLICE KITS WHERE NEEDED TO HEAT TRACE ALL ABOVE GRADE RAS PIPING.
4. PROVIDE 2 #10, #10G., ¾"C.
5. PROVIDE 6" SIEMENS ELECTROMAGNETIC FLOWMETER, SIEMENS MODEL 5100W, WITH ANSI 150LB CARBON STEEL FLANGES, EBONITE HARD RUBBER LINER, HASTELLOY ELECTRODES, WITH MAG 5000 TRANSMITTER WITH DISPLAY. MOUNT TRANSMITTER WITH DISPLAY DIRECTLY TO FLOWMETER TUBE. FLOW RANGE WILL BE 0-1000 GPM CONNECTED TO DUCTILE IRON PIPING.
6. PROVIDE 2 #12, #12G., ¾"C. FROM HEAT TRACE JUNCTION BOX TO POWER THE FLOWMETER.

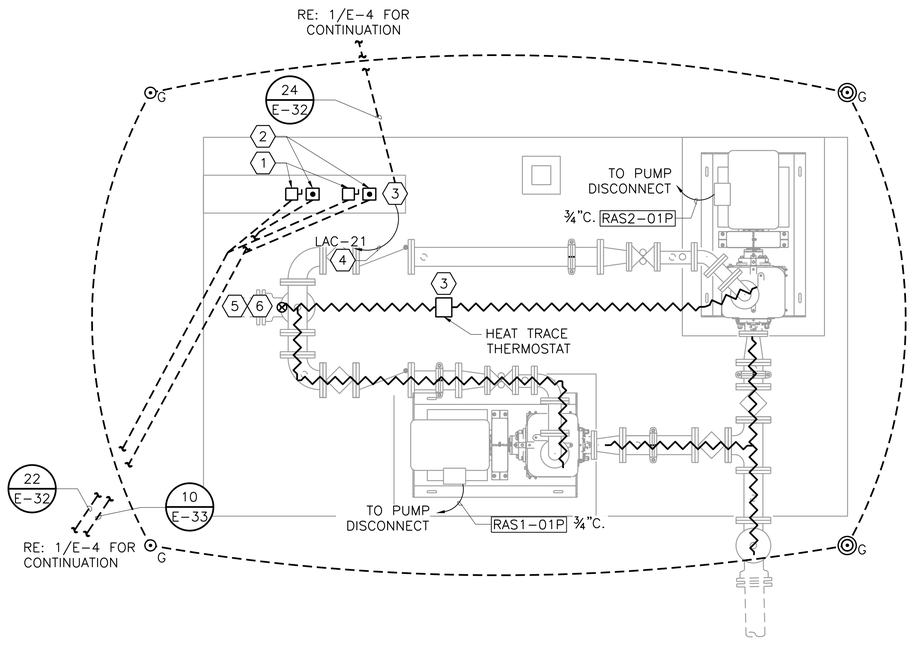

NORTH

1 / – RAS PUMP STATION
1/2"=1'-0"

0 1' 2' 4'
1/2"=1'-0"

This Record Drawing is a combination of the sealed engineering contract drawings for this project, modified by information furnished by the contractor reflecting changes in the Project made during construction. The original sealed drawings are on file at the offices of FREESE AND NICHOLS, INC.
RECORD DRAWINGS PREPARED ON: 06/24/20

Freese and Nichols, Inc.
Texas Registered Engineering Firm F-2144

THE SEAL THAT ORIGINALLY APPEARED ON THIS DOCUMENT WAS AUTHORIZED BY JOHN W.P. MANNING, P.E. TEXAS NO. 92174 ON 06/10/2016. ALTERATION OF A SEALED DOCUMENT WITHOUT PROPER NOTIFICATION OF THE RESPONSIBLE ENGINEER IS AN OFFENSE UNDER THE TEXAS ENGINEERING PRACTICE ACT.

FREESE AND NICHOLS
4040 Broadway Street, Suite 600
San Antonio, Texas 78209-6350
Phone - (210) 298-3800
Fax - (210) 298-3801
Web - www.freese.com

CITY OF CASTROVILLE
WWTP CAPACITY EXPANSION PROJECT
ELECTRICAL
RAS PUMP STATION

NO.	ISSUE	BY	DATE
4	RECORD DRAWING	JWM	06/24/20
3	PCM 12	MPS	03/31/20
2	ISSUED FOR CONSTRUCTION	JWM	11/18/16
1	CA No.1	JWM	10/25/16

F&N JOB NO. CVL14259
DATE 6/10/16
DESIGNED JWM
DRAWN JWM
REVISED
CHECKED TWZ
FILE NAME EL-RAS-PL-PWR.dwg

VERIFY SCALE 0 1
Bar is one inch on original drawing. If not one inch on this sheet, adjust scale.

SHEET E-9
SEQ.

ACAD Rel: 23.0s (LMS Tech)
Filename: N:\ELEC\EL-RAS-PL-PWR.dwg
Last Saved: 6/23/2020 9:38 AM Saved By: 03823

Plot Date: 6/23/2020 9:49 AM Plot By: 03823 Filename: N:\ELEC\EL-RAS-PL-PWR.dwg

GENERAL NOTES:

1. ALL JUNCTION BOXES, CONDUIT SUPPORTS, AND FITTINGS SHALL BE 304 STAINLESS STEEL.
2. CONDUIT ROUTING SHALL NOT INTERFERE WITH MECHANICAL EQUIPMENT.
3. POWER, DISCRETE, AND ANALOG CONDUCTORS SHALL BE ROUTED IN SEPARATE CONDUIT.
4. CONTRACTOR SHALL BE RESPONSIBLE FOR PROVIDING AND SIZING JUNCTION AND PULL BOXES PER THE NATIONAL ELECTRIC CODE.
5. CONTRACTOR SHALL VERIFY WITH MANUFACTURER'S DRAWINGS FOR EXACT DEVICE AND INSTRUMENTATION REQUIREMENTS. ELECTRICAL DRAWING REFLECTS EQUIPMENT SELECTION IDENTIFIED ON SHEET F-M2, ALTERNATIVE EQUIPMENT MANUFACTURE IS SHOWN ON SHEET F-M1 AND CONTRACTOR SHALL MAKE THE NECESSARY MODIFICATIONS AT NO ADDITIONAL COST TO THE OWNER.
6. CAP AND PROVIDE PULL STRING FOR SPARE CONDUIT.
7. EXPOSED CONDUIT MAY BE RESIZED BY CONTRACTOR, BUT MUST MEET THE REQUIREMENTS OF THE LATEST VERSION OF NATIONAL ELECTRICAL CODE.

NOTES BY SYMBOL "⬡"

1. FILTER CONTROL PANEL SUPPLIED BY AQUA-AEROBIC SYSTEMS.
2. PROVIDE 5W/FT SELF REGULATING HEAT TRACE FOR EXPOSED HORIZONTAL AND VERTICAL EXPOSED PIPING. PROVIDE SWITCH TO SHUT OFF HEAT TRACE PRIOR TO TERMINATING CONDUCTORS IN THE AMBIENT TEMPERATURE SENSING CONTROLLER. SWITCH SHALL BE WEATHERPROOF. PROVIDE 2 #10, #10G., ¾"C.

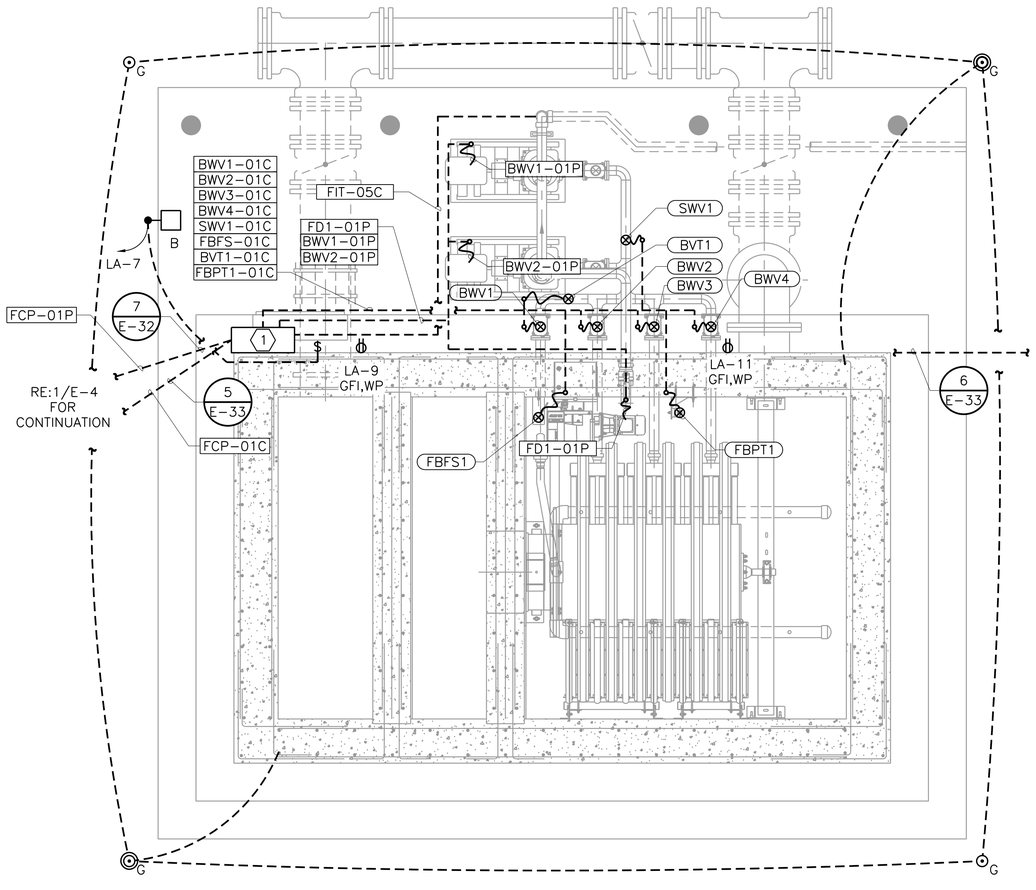

NORTH 1 — FILTER POWER AND CONTROLS
1/2" = 1'-0"

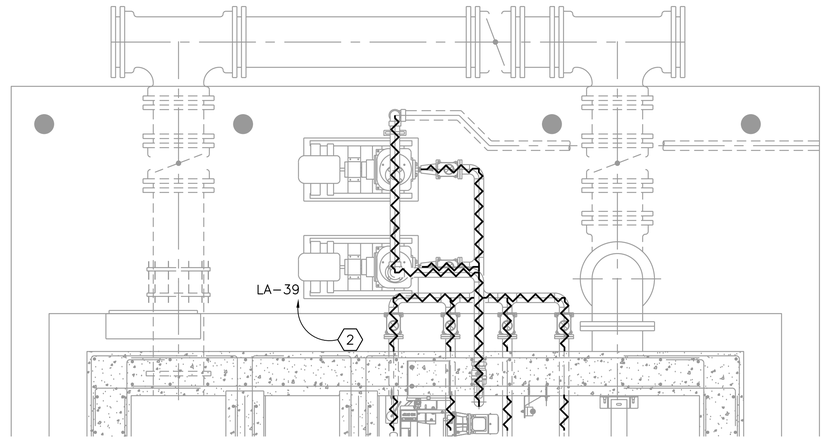

NORTH 2 — FILTER PARTIAL PLAN HEAT TRACE
1/2" = 1'-0"

0 1' 2' 4'
1/2"=1'-0"

This Record Drawing is a combination of the sealed engineering construction documents for this project, modified by information furnished by the contractor reflecting changes in the project made during construction. These original sealed drawings are on file at the offices of FREESE AND NICHOLS, INC.
RECORD DRAWINGS PREPARED ON: 06/24/20

Freese and Nichols, Inc.
Texas Registered Engineering Firm F-2144

THE SEAL (INITIALED) APPEARING ON THIS DOCUMENT WAS AUTHORIZED BY JOHN W. MANNING, P.E. ON 06/24/2020. IT IS NOT TO BE USED FOR ANY ALTERATION OF A SEALED DOCUMENT WITHOUT PROPER AUTHORIZATION AND ADDITIONAL SEALING BY THE ENGINEER. IT IS A VIOLATION OF THE TEXAS ENGINEERING PRACTICE ACT FOR ANY PERSON TO ALTER THIS DOCUMENT IN ANY WAY FOR ANY REASON, UNLESS SUCH PERSON IS ACTING UNDER THE DIRECTION OF A LICENSED ENGINEER AND THE ALTERATION IS PROPERLY SEALED AND IDENTIFIED BY THE NAME AND SEAL OF SUCH ENGINEER AND A DESCRIPTION OF THE ALTERATION. THE ENGINEER AND SEALER ASSUMES NO RESPONSIBILITY FOR USE OF THIS DOCUMENT FOR PURPOSES OTHER THAN THOSE AUTHORIZED BY THE ENGINEER AND NO LIABILITY FOR DAMAGES RESULTING FROM SUCH UNAUTHORIZED USE.

FREESE NICHOLS
4040 Broadway Street, Suite 600
San Antonio, Texas 78209-6350
Phone (210) 298-3800
Fax (210) 298-3801
Web - www.freese.com

CITY OF CASTROVILLE
WWTP CAPACITY EXPANSION PROJECT
ELECTRICAL
FILTER POWER

NO.	ISSUE	BY	DATE
	RECORD DRAWING	JWM	06/24/20
1	ISSUED FOR CONSTRUCTION	JWM	11/18/16
1	CA No.1	JWM	10/25/16

VERIFY SCALE Bar is one inch on original drawing. If not one inch on this sheet, adjust scale.
0 1"

F&N JOB NO. CVL14259
DATE 6/10/16
DESIGNED JWM
DRAWN JWM
REVISED
CHECKED TWZ
FILE NAME E-8 EL-FIL-PL-PWR.dwg

SHEET E-10
SEQ.

ACAD Rel: 23.0s (LMS Tech)
Filename: N:\ELEC\E-8 EL-FIL-PL-PWR.dwg
Last Saved: 6/22/2020 3:40 PM Saved By: 03823
Plot Date: 6/23/2020 9:49 AM Plot By: 03823 Filename: N:\ELEC\E-8 EL-FIL-PL-PWR.dwg

GENERAL NOTES:

1. POWER, DISCRETE, AND ANALOG CONDUCTORS SHALL BE ROUTED IN SEPARATE CONDUITS.
2. EXPOSED CONDUIT MAY BE RESIZED BY CONTRACTOR, BUT MUST MEET THE REQUIREMENTS OF THE LATEST VERSION OF NATIONAL ELECTRICAL CODE.

1

NOTES BY SYMBOL "⬡"

1. PROVIDE 2 #12, #12G., ¾"C.
2. MOUNT FLOW ELEMENT (LEVEL TRANSDUCER) TO 316 STAINLESS STEEL UNISTRUT OVER THE WEIR AS RECOMMENDED BY THE MANUFACTURER.
3. MOUNT FLOW TRANSMITTER TO EQUIPMENT RACK SHOWN IN DETAIL 1/E-30.
4. MANUFACTURER SUPPLIED CABLE SHALL TERMINATE IN FLOW INDICATOR TRANSMITTER WITHOUT SPLICES.
5. PROVIDE NEMA 4X 316 STAINLESS STEEL TERMINATION CABINET. RE: 2/E-11 FOR FLOAT MOUNTING DETAILS.

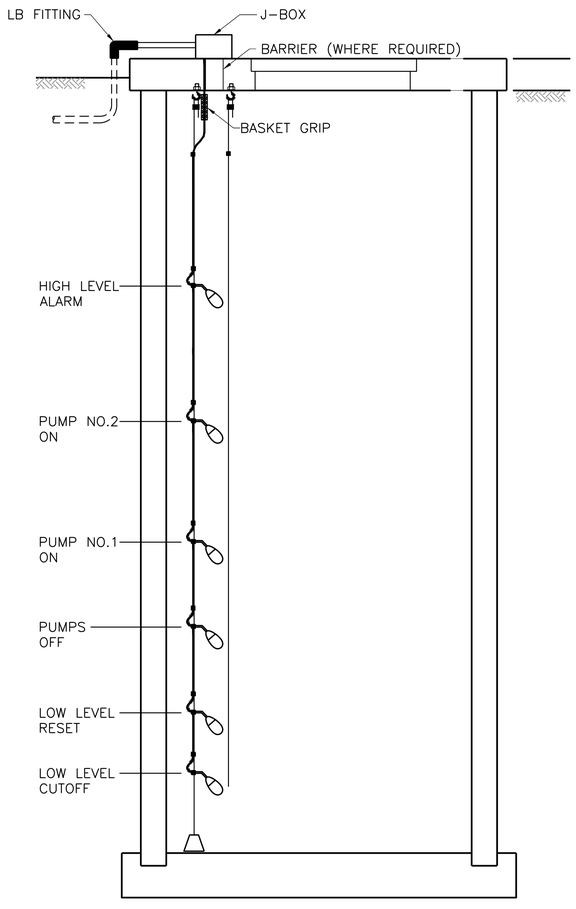

NO.2 GENERAL NOTES:

1. FLOATS SHOWN ON THIS DETAIL ARE FOR EXAMPLE ONLY. THE NUMBER OF FLOATS REQUIRED IS IDENTIFIED ON THE PLAN SHEET.

2 / – LEVEL FLOAT SWITCHES DETAIL

NOT TO SCALE

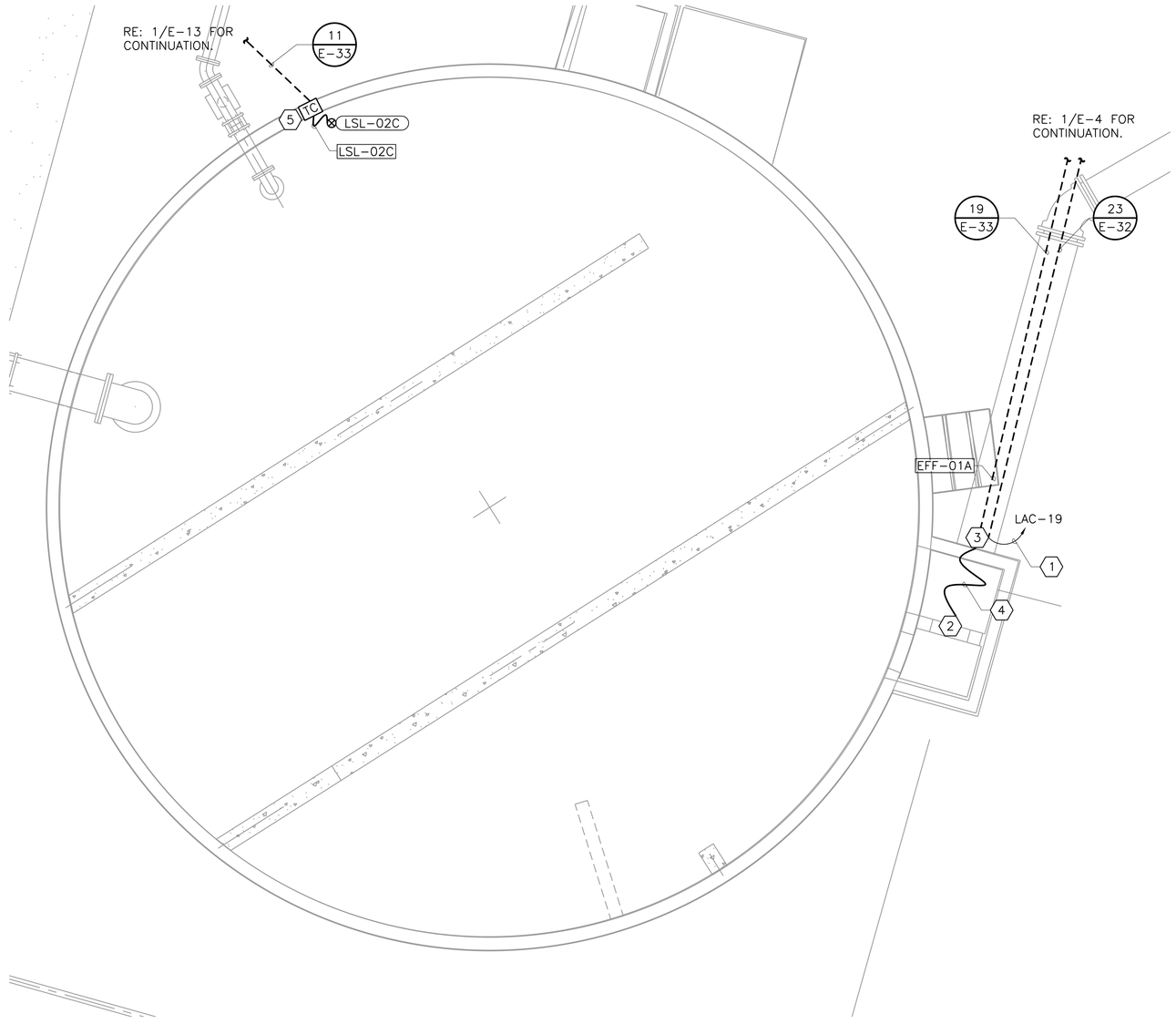

NORTH

1 / – CHLORINE CONTACT CHAMBER

3/8"=1'-0"

0 1' 2' 4'

3/8"=1'-0

This Record Drawing is a combination of the sealed engineering construction plans for this project, modified by information furnished by the contractor reflecting changes in the project made during construction. These original sealed drawings are on file at the offices of FREESE AND NICHOLS, INC.

RECORD DRAWINGS PREPARED ON: 06/24/20

Freese and Nichols, Inc.
Texas Registered Engineering Firm F-2144

THE SEAL (INITIALLY APPEARED ON THIS DOCUMENT WAS AUTHORIZED BY JOHN W. MANNING, P.E. ALTERATION OF A SEALED DOCUMENT WITHOUT PROPER AUTHORIZATION AND ADDITIONAL SEAL MAY BE A VIOLATION OF THE TEXAS ENGINEERING PRACTICE ACT

FREESE NICHOLS
4040 Broadway Street, Suite 600
San Antonio, Texas 78209-6350
Phone (210) 298-3800
Fax (210) 298-3838
Web – www.freese.com

CITY OF CASTROVILLE

WWTP CAPACITY EXPANSION PROJECT

ELECTRICAL

CHLORINE CONTACT CHAMBER

F&N JOB NO. CVL14259
DATE 6/10/16
DESIGNED JWM
DRAWN JWM
REVISED
CHECKED TWZ
FILE NAME EL-CCB-PL-PWR.dwg

NO.	ISSUE	BY	DATE
2	RECORD DRAWING	JWM	06/24/20
1	ISSUED FOR CONSTRUCTION	JWM	11/18/16
1	CA No.1	JWM	10/25/16

VERIFY SCALE Bar is one inch on original drawing. If not one inch on this sheet, adjust scale.

0 1"

SHEET E-11

SEQ.

ACAD Rel: 23.0s (LMS Tech)
Filename: N:\ELEC\EL-CCB-PL-PWR.dwg
Last Saved: 6/22/2020 3:41 PM Saved By: 03823

Plot Date: 6/23/2020 9:49 AM Plot By: 03823 Filename: N:\ELEC\EL-CCB-PL-PWR.dwg

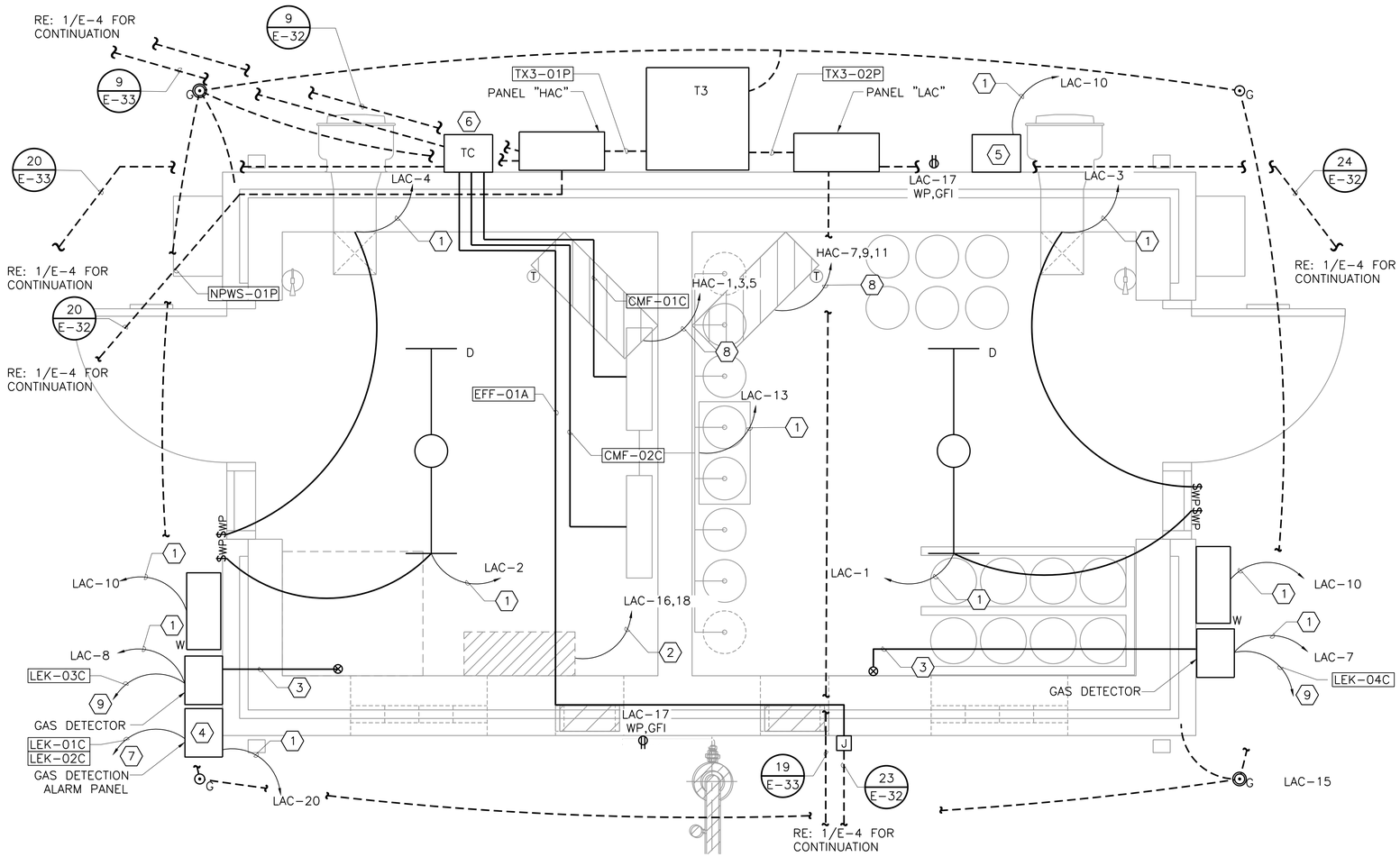

CHEMICAL BUILDING
3/4"=1'-0"

GENERAL NOTES:

1. CONDUITS INSIDE THE CHLORINE ROOM SHALL BE PVC SCHEDULE 40. ALL MOUNTING HARDWARE AND CONDUIT STRAPS SHALL BE 316 STAINLESS STEEL. CONDUITS EXTERIOR OF THE BUILDING SHALL BE RIGID ALUMINUM.
2. EQUIPMENT MOUNTED TO THE EXTERIOR OF THE BUILDING SHALL BE MOUNTED TO 316SS UNISTRUT. ALL MOUNTING HARDWARE SHALL BE 316 SS. CONDUITS ENTERING OR EXITING ROOMS SHALL BE SEALED TO PREVENT GASSING INTO EXTERIOR ENCLOSURES.
3. EXPOSED CONDUIT MAY BE RESIZED BY CONTRACTOR, BUT MUST MEET THE REQUIREMENTS OF THE LATEST VERSION OF THE NATIONAL ELECTRICAL CODE.

NOTES BY SYMBOL "⬡"

1. PROVIDE 2 #12, #12G., ¾"C.
2. PROVIDE 2 #4, #10G., 1½"C.
3. MANUFACTURE SUPPLIED CABLE. MOUNT GAS SENSOR 1' ABOVE FINISHED FLOOR.
4. STROBE ALARM AND HORN CONTROL PANEL PROVIDED IN 316 STAINLESS STEEL NEMA 4X CONTROL PANEL. PROVIDE CONTROLS AS INDICATED IN CONTROL SCHEMATICS.
5. PROVIDE EXTERIOR LIGHTING CONTROL PANEL IN NEMA 4X 316 SS. PROVIDE PHOTOCELL AND CONTROLS AS INDICATED ON THE CONTROL SCHEMATICS.
6. PROVIDE NEMA 4X 316 STAINLESS STEEL TERMINATION CABINET ENCLOSURE.
7. ROUTE TO TERMINATION CABINET.
8. PROVIDE 3 #12, #12G., ¾"C.
9. ROUTE TO GAS DETECTION ALARM PANEL.

NORTH

0 6" 1' 2'
3/4"=1'-0

This Record Drawing is a combination of the sealed engineering contract drawings for this project, modified by information furnished by the contractor reflecting changes in the Project made during construction. The original sealed drawings are on file at the offices of FREESE AND NICHOLS, INC.
RECORD DRAWINGS PREPARED ON: 06/24/20

Freese and Nichols, Inc.
Texas Registered Engineering Firm F-2144

THE SEAL THAT ORIGINALLY APPEARED ON THIS DOCUMENT WAS AUTHORIZED BY JOHN M.P. MANNING P.E. TEXAS NO. 92724 ON 06/10/2016. ALTERATION OF A SEALED DOCUMENT WITHOUT PROPER NOTIFICATION OF THE RESPONSIBLE ENGINEER IS AN OFFENSE UNDER THE TEXAS ENGINEERING PRACTICE ACT.

FREESE AND NICHOLS
4040 Broadway Street, Suite 600
San Antonio, Texas 78209-6350
Phone - (210) 298-3800
Fax - (210) 298-3801
Web - www.freese.com

CITY OF CASTROVILLE
WWTP CAPACITY EXPANSION PROJECT
ELECTRICAL
CHEMICAL BUILDING

NO.	ISSUE	BY	DATE
3	RECORD DRAWING	JWM	06/24/20
2	ISSUED FOR CONSTRUCTION	JWM	11/18/16
1	CA No.1	JWM	10/25/16

F&N JOB NO. CVL14259
DATE 6/10/16
DESIGNED JWM
DRAWN JWM
REVISED
CHECKED TWZ
FILE NAME E-11 EL-CFB-PL-PWR.dwg

VERIFY SCALE 0 1
Bar is one inch on original drawing. If not one inch on this sheet, adjust scale.

SHEET E-12
SEQ.

ACAD Rel: 23.0s (LMS Tech)
Filename: N:\ELEC\E-11 EL-CFB-PL-PWR.dwg
Last Saved: 6/22/2020 3:42 PM Saved By: 03823

Plot Date: 6/23/2020 9:50 AM Plot By: 03823 Filename: N:\ELEC\E-11 EL-CFB-PL-PWR.dwg

GENERAL NOTES:

1. CONDUIT STUB UP LOCATION MAY CHANGE BASED ON EQUIPMENT MANUFACTURER PROVIDED. CONTRACTOR SHALL COORDINATE POWER REQUIREMENTS AND CONDUIT STUB UP LOCATION WITH MANUFACTURER PROVIDED.
2. EXPOSED CONDUIT MAY BE RESIZED BY CONTRACTOR, BUT MUST MEET THE REQUIREMENTS OF THE LATEST VERSION OF THE NATIONAL ELECTRICAL CODE.

1

NOTES BY SYMBOL "⬡"

1. APPROXIMATE LOCATION OF CONTROL PANEL. CONTRACTOR SHALL COORDINATE WITH MANUFACTURER.
2. PROVIDE 3 #1/0, #6G., 2"C. AND TAG NPWS-01P.
3. BOND GROUND ROD TO EQUIPMENT FRAME.

3

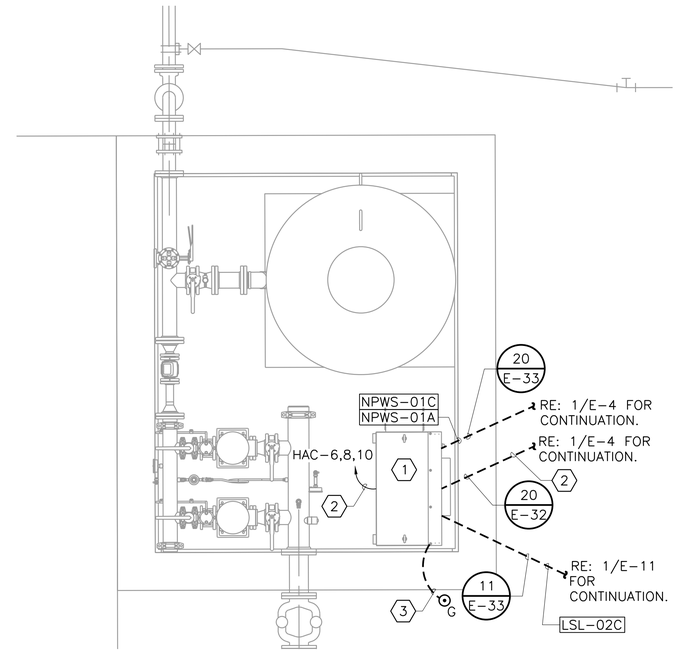

NORTH

1 / –

PLANT WATER NON-POTABLE SYSTEM

1/2"=1'-0"

0 1' 2' 4'

1/2"=1'-0"

This Record Drawing is a combination of the sealed engineering contract drawings for this project, modified by information furnished by the contractor reflecting changes in the Project made during construction. The original sealed drawings are on file at the offices of FREESE AND NICHOLS, INC.

RECORD DRAWINGS PREPARED ON: 06/24/20

Freese and Nichols, Inc.
Texas Registered Engineering Firm F-2144

THE SEAL THAT ORIGINALLY APPEARED ON THIS DOCUMENT WAS AUTHORIZED BY JOHN W.P. MANNING P.E. TEXAS NO. 92174 ON 06/10/2016. ALTERATION OF A SEALED DOCUMENT WITHOUT PROPER NOTIFICATION OF THE RESPONSIBLE ENGINEER IS AN OFFENSE UNDER THE TEXAS ENGINEERING PRACTICE ACT.

FREESE AND NICHOLS
4040 Broadway Street, Suite 600
San Antonio, Texas 78209-6350
Phone - (210) 298-3800
Fax - (210) 298-3801
Web - www.freese.com

CITY OF CASTROVILLE
WWTP CAPACITY EXPANSION PROJECT
ELECTRICAL
PLANT WATER NON-POTABLE SYSTEM

NO.	ISSUE	BY	DATE
4	RECORD DRAWING	JWM	06/24/20
3	PCM NO. 9	JWM	7/13/17
2	ISSUED FOR CONSTRUCTION	JWM	11/18/16
1	CA No.1	JWM	10/25/16

F&N JOB NO. CVL14259
DATE 6/10/16
DESIGNED JWM
DRAWN JWM
REVISED
CHECKED TWZ
FILE NAME EL-NPW-PL-PWR.dwg

VERIFY SCALE 0 1
Bar is one inch on original drawing. If not one inch on this sheet, adjust scale.

SHEET E-13
SEQ.

ACAD Rel: 23.0s (LMS Tech)
Filename: N:\ELEC\EL-NPW-PL-PWR.dwg
Last Saved: 6/23/2020 9:21 AM Saved By: 03823

Plot Date: 6/23/2020 9:51 AM Plot By: 03823 Filename: N:\ELEC\EL-NPW-PL-PWR.dwg

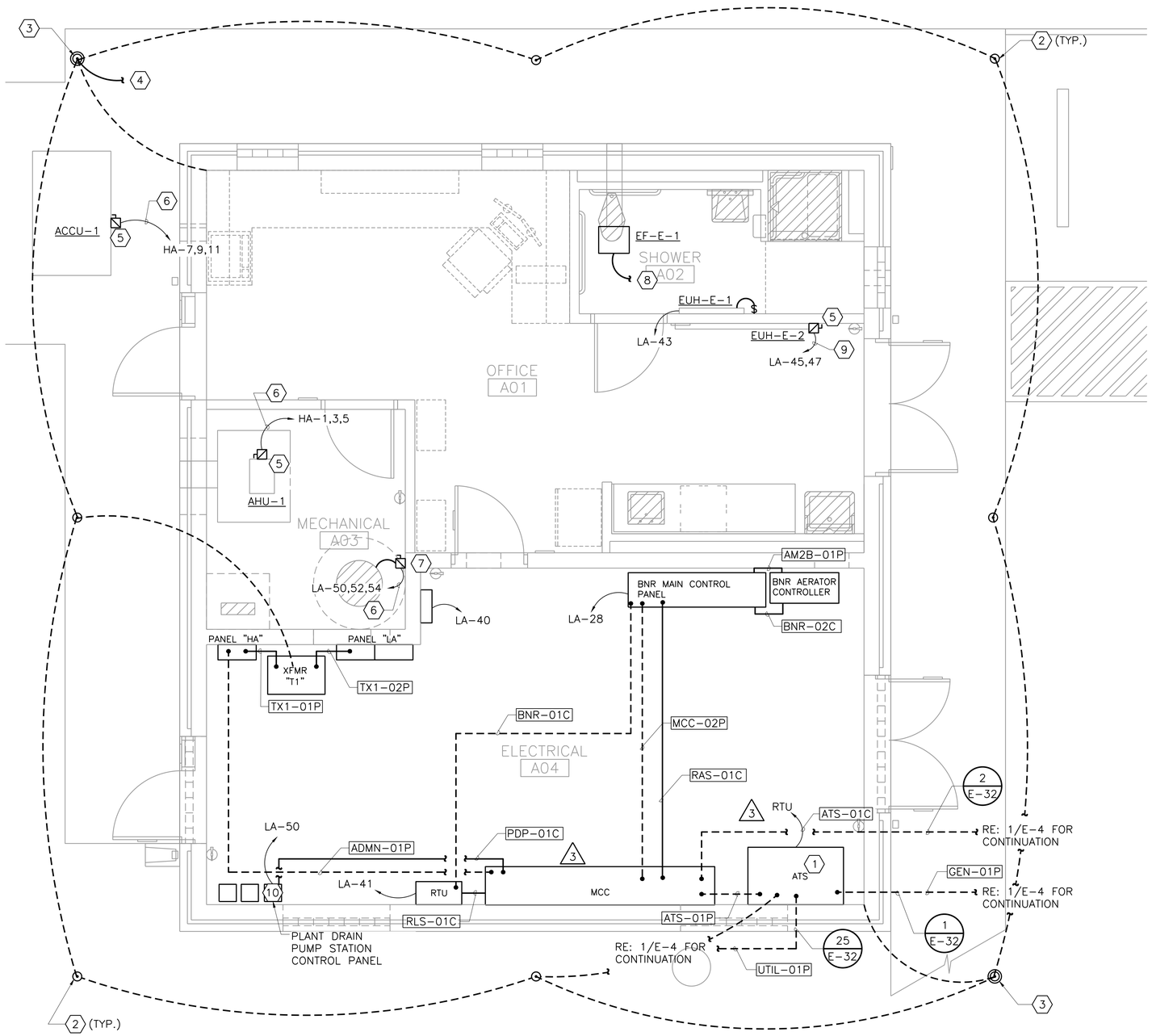

NORTH

1 – ADMINISTRATION BUILDING POWER AND CONTROLS PLAN

3/8"=1'-0"

GENERAL NOTES:

1. WHERE ROCK BOTTOM IS ENCOUNTERED, HORIZONTAL GROUND RODS OR PLATE ELECTRODES SHALL BE INSTALLED.
2. CONTRACTOR SHALL COORDINATE WITH EQUIPMENT MANUFACTURERS FOR LOCATIONS TO TERMINATE #4/0 GROUND CONDUCTORS TO EQUIPMENT PRIOR TO INSTALLATION OF EQUIPMENT PADS.
3. GROUND ROD TEST WELLS SHALL BE MOUNTED FLUSH WITH THE TOP OF THE CONCRETE OR FINISH ELEVATION.
4. POWER, DISCRETE AND ANALOG SIGNAL CONDUCTORS MUST BE ROUTED IN SEPARATE CONDUITS.
5. PROVIDE LIGHTNING PROTECTION ON THE BUILDING PER SPECIFICATIONS.
6. CONDUIT STUB UP LOCATIONS AND EQUIPMENT CONDUIT ENTRY/EXIT LOCATIONS SHALL BE COORDINATED WITH MANUFACTURERS.
7. MOTOR CONTROL CENTER MANUFACTURER SHALL BE RESPONSIBLE TO COORDINATE ALL REQUIRED STARTERS FROM EQUIPMENT SUPPLIERS PRIOR TO BIDDING. SPACE ALLOCATED FOR THE MOTOR CONTROL CENTER, AND TRANSFER SWITCH SHALL BE VERIFIED TO BE SUFFICIENT PRIOR TO BIDS. CONTRACTOR SHALL INCREASE BUILDING SIZE IF REQUIRED BASED ON RESPONSES FROM MANUFACTURER AT NO ADDITIONAL COST TO THE OWNER.
8. COMPRESSION TYPE EMT CONDUIT FOR LIGHTING, RECEPTACLES, AND COMMUNICATIONS SHALL BE ALLOWED IN OFFICE ROOM A01 AND A02. CONDUITS MUST BE CONCEALED.
9. EXPOSED CONDUIT MAY BE RESIZED BY CONTRACTOR, BUT MUST MEET THE REQUIREMENTS OF THE LATEST VERSION OF NATIONAL ELECTRICAL CODE.

1

NOTES BY SYMBOL "⬡"

1. CONTRACTOR SHALL COORDINATE TRANSFER SWITCH CABLE ENTRY/EXIT LOCATIONS AND PROVIDE THE REQUIRED RACEWAYS AND CONDUCTORS AS REQUIRED. TRANSFER SWITCH SHALL BE UL RATED FOR SERVICE ENTRANCE.
2. PROVIDE A ¾" X 10' COPPER CLAD ROUND ROD.
3. GROUND TEST WELL. RE: 4/E-30 FOR DETAILS.
4. TO LIGHTNING PROTECTION SYSTEM. REFER TO SPECIFICATION 26 41 13 LIGHTNING PROTECTION FOR STRUCTURES FOR ADDITIONAL INFORMATION.
5. INTEGRAL DISCONNECT SWITCH TO BE PROVIDED WITH UNIT.
6. PROVIDE 3 #12, #12G., 1"C
7. PROVIDE A 30A/3P/20A FUSED DISCONNECT WITH A NEMA 4X 316 STAINLESS STEEL ENCLOSURE FOR WATER HEATER. COORDINATE EXACT FUSE SIZE WITH WATER HEATER MANUFACTURER.
8. CONNECT TO SWITCHED LIGHTING CIRCUIT SERVING THIS ROOM. RE: 1/E-15 FOR CIRCUIT CONTINUITY.
9. PROVIDE 2 #12, #12G., ¾"C.
10. PROVIDE PLANT DRAIN PUMP STATION CONTROL PANEL. RE: 3/E-24 FOR CONTROLS.

0 1' 2' 4'

3/8"=1'-0

This Record Drawing is a combination of the sealed engineering construction plans for this project, modified by information furnished by the contractor reflecting changes in the project construction. For complete details, original sealed drawings are on file at the offices of FREESE AND NICHOLS, INC.
RECORD DRAWINGS PREPARED ON: 06/24/20

Freese and Nichols, Inc.
Texas Registered Engineering Firm F-2144

THE SEAL (NOT ORIGINALLY AFFIXED ON THIS DOCUMENT) WAS AUTHORIZED BY JOHN W. MANNING, P.E. ON 06/24/2020. THIS DOCUMENT WITHOUT PROPER ALTERATION OF A SEALED DOCUMENT IS A VIOLATION OF THE TEXAS ENGINEERING PRACTICE ACT.

FREESE NICHOLS
4040 Broadway Street, Suite 600
San Antonio, Texas 78209-6350
Phone (210) 298-3800
Fax (210) 298-3801
Web – www.freese.com

CITY OF CASTROVILLE

WWTP CAPACITY EXPANSION PROJECT

ELECTRICAL

ADMINISTRATION BUILDING POWER PLAN

NO.	ISSUE	BY	DATE
1	RECORD DRAWING	JWM	06/24/20
2	PCM#5	JWM	4/14/17
3	ISSUED FOR CONSTRUCTION	JWM	11/18/16
4	CA No.1	JWM	10/25/16

VERIFY SCALE Bar is one inch on original drawing. If not one inch on this sheet, adjust scale.

F&N JOB NO.	CVL14259
DATE	6/10/16
DESIGNED	JWM
DRAWN	JWM
CHECKED	TWZ
FILE NAME	EL-ADB-PL-PWR.dwg

SHEET E-14

SEQ.

ACAD Rel: 23.0s (LMS Tech)
Filename: N:\ELEC\EL-ADB-PL-PWR.dwg
Last Saved: 6/22/2020 3:45 PM Saved By: 03823

Plot Date: 6/23/2020 9:51 AM Plot By: 03823 Filename: N:\ELEC\EL-ADB-PL-PWR.dwg

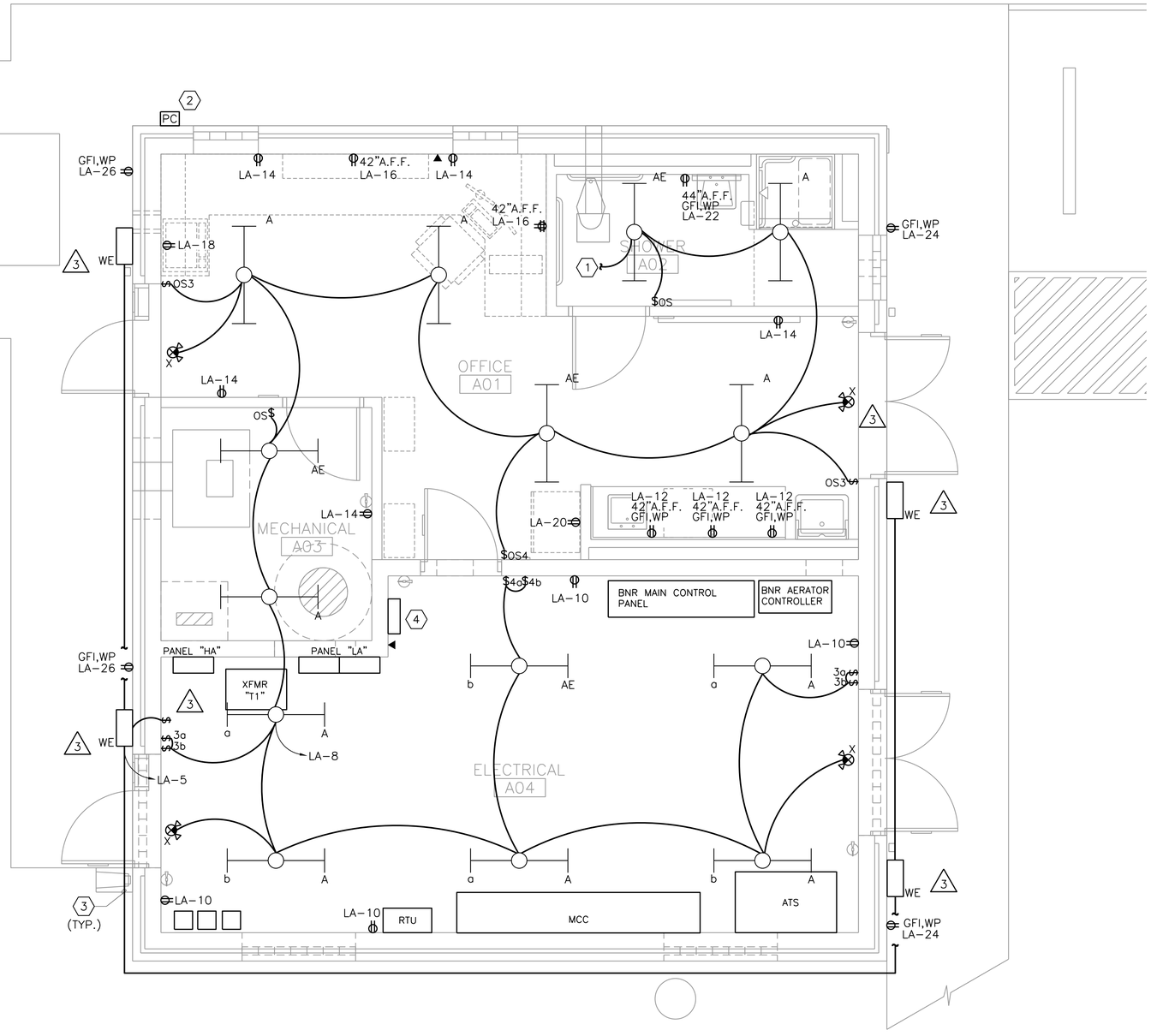

ADMINISTRATION BUILDING
LIGHTING AND RECEPTACLE PLAN
3/8"=1'-0"

0 1' 2' 4'
3/8"=1'-0

GENERAL NOTES:

1. ALL RECEPTACLE AND LIGHTING WIRING SHALL BE 2 #12, #12G. ¾"C. UNLESS NOTED OTHERWISE.
2. THE CONTRACTOR SHALL BE RESPONSIBLE ALL LIGHTING MOUNTING HARDWARE.
3. ALL FIXTURES TYPE "A" SHALL BE MOUNTED AT 11'-0" ABOVE FINISHED FLOOR.
4. ALL FIXTURES TYPE "WE" SHALL BE MOUNTED AT 10'-6" ABOVE FINISHED GRADE.
5. EXIT SIGNS TYPE "X" SHALL BE NON-SWITCHED AND SHALL BE CONNECTED TO LOCAL LIGHTING CIRCUIT.
6. CONNECT EMERGENCY BALLAST ON FIXTURES TYPE "AE" TO UNSWITCHED LEG OF LOCAL LIGHTING CIRCUIT.
7. CONTRACTOR SHALL COORDINATE WITH PHONE COMPANY TO PROVIDE PHONE BOX ON OUTSIDE OF BUILDING. PROVIDE 4" PVC SCH.40 CONDUIT FROM PHONE BOX LOCATION TO POWER POLE OF UTILITY COMPANY'S CHOICE.
8. COMPRESSION TYPE EMT CONDUIT SHALL BE ALLOWED IN OFFICE ROOM A01 AND A02 FOR LIGHT FIXTURES, RECEPTACLES, AND COMMUNICATION ONLY. ALL OTHER CONDUITS PASSING THROUGH THAT SPACE SHALL BE RIGID ALUMINUM.
9. EXPOSED CONDUIT MAY BE RESIZED BY CONTRACTOR, BUT MUST MEET THE REQUIREMENTS OF THE LATEST VERSION OF NATIONAL ELECTRICAL CODE.

NOTES BY SYMBOL "⬡"

3 1. TO EXHAUST FAN EF-E-1. RE: 1/E-14 FOR CONTINUATION.
2. MOUNT PHOTOCELL AT 10'-0" ABOVE FINISHED GRADE. PHOTOCELL SHALL FACE NORTH.
3. CONTRACTOR SHALL LOCATE CONDUIT FOR EXTERIOR LIGHTING INSIDE THE BUILDING. CONDUIT SHALL NOT BE EXPOSED OUTSIDE THE BUILDING.
4. PROVIDE LIGHTING CONTACTOR WITH CONTROLS FOR EXTERIOR BUILDING LIGHTS. CONTACTOR, ENLOSURE, AND CONTROLS SHALL BE LOCATED INSIDE THE ELECTRICAL BUILDING. RE: 1/E-24 FOR DETAILS.

This Record Drawing is a combination of the as-bid drawings, shop drawings, and other project modified by information furnished by the contractor reflecting changes in the project construction. Freese and Nichols has not sealed drawings are on file at the offices of FREESE AND NICHOLS, INC.
RECORD DRAWINGS PREPARED ON: 06/24/20

Freese and Nichols, Inc.
Texas Registered Engineering Firm F-2144

THE SEAL (NOT ORIGINALLY AFFIXED ON THIS DOCUMENT WAS AUTHORIZED BY JOHN W. MANNING, P.E. ALTERATION OF A SEALED DOCUMENT WITHOUT PROPER AUTHORIZATION OF THE PROFESSIONAL ENGINEER IS A VIOLATION OF THE TEXAS ENGINEERING PRACTICE ACT.

FREESE NICHOLS
4040 Broadway Street, Suite 600
San Antonio, Texas 78209-6350
Phone (210) 298-3800
Fax (210) 298-3801
Web - www.freese.com

CITY OF CASTROVILLE

WWTP CAPACITY EXPANSION PROJECT

ELECTRICAL

ADMINISTRATION BUILDING LIGHTING AND RECEPTACLE PLAN

F&N JOB NO. CVL14259
DATE 6/10/16
DESIGNED JWM
DRAWN JWM
CHECKED TWZ
FILE NAME EL-ADB-PL-LTG.dwg

NO.	ISSUE	BY	DATE
1	RECORD DRAWING	JWM	06/24/20
2	PCM No.5	GTN	04/18/17
3	ISSUED FOR CONSTRUCTION	JWM	11/18/16
1	CA No.1	JWM	10/25/16

VERIFY SCALE Bar is one inch on original drawing. If not one inch on this sheet, adjust scale.
0 1"

SHEET E-15
SEQ.

ACAD Rel: 23.0s (LMS Tech)
Filename: N:\ELEC\EL-ADB-PL-LTG.dwg
Last Saved: 6/22/2020 3:46 PM Saved By: 03823
Plot Date: 6/23/2020 9:52 AM Plot By: 03823 Filename: N:\ELEC\EL-ADB-PL-LTG.dwg

GENERAL NOTES:

1. POWER, DISCRETE, AND ANALOG SIGNALS SHALL BE ROUTED IN SEPARATE CONDUITS.
2. CONDUIT ROUTES MAY CHANGE BASED ON ACTUAL CONDITIONS.
3. PUMP STATION IS HAZARDOUS LOCATION CLASS I, DIV.2 GROUP D 18" ABOVE WATER SURFACE AND 10 HORIZONTALLY FROM WETTED WALLS. ALL EQUIPMENT AND MATERIALS USED IN THE CLASSIFIED AREA SHALL BE RATED APPROPRIATELY.
4. EXPOSED CONDUIT MAY BE RESIZED BY CONTRACTOR, BUT MUST MEET THE REQUIREMENTS OF THE LATEST VERSION OF NATIONAL ELECTRICAL CODE.

1

NOTES BY SYMBOL "⬡"

1. MANUFACTURER SUPPLIED CABLE. CONTRACTOR SHALL COORDINATE CABLE LENGTH TO REACH TERMINATION CABINET AND DISCONNECT WITHOUT SPLICES WITH THE MANUFACTURER.
2. CONTRACTOR SHALL PROVIDE EQUIPMENT RACK FOR DISCONNECT AND TERMINATION CABINET.
3. PROVIDE 304L STAINLESS STEEL, NEMA 4X TERMINATION CABINET FOR PUMP MONITORING DEVICES. PROVIDE TERMINATION STRIPS MOUNTED TO BACK PLANE OF CABINET.
4. PROVIDE 5W/FT SELF REGULATING HEAT TRACE WITH AMBIENT TEMPERATURE SENSING CONTROLLER. PROVIDE WEATHER PROOF SWITCH TO DISCONNECT POWER WHEN NOT IN USE. MOUNT SWITCH TO UNISTRUT, RE: 2/E-16 FOR DETAILS.
5. PROVIDE 2 #10, #10G., ¾"C.
6. PROVIDE LEVEL FLOATS PER DETAIL. RE:2/E-11. JUNCTION BOX IN DETAIL NOT REQUIRED AND PENETRATION INTO WET WELL SHALL BE THROUGH THE SIDE OF THE STRUCTURE. PROVIDE WEIGHT, CABLE AND SUPPORTS PER DETAIL.

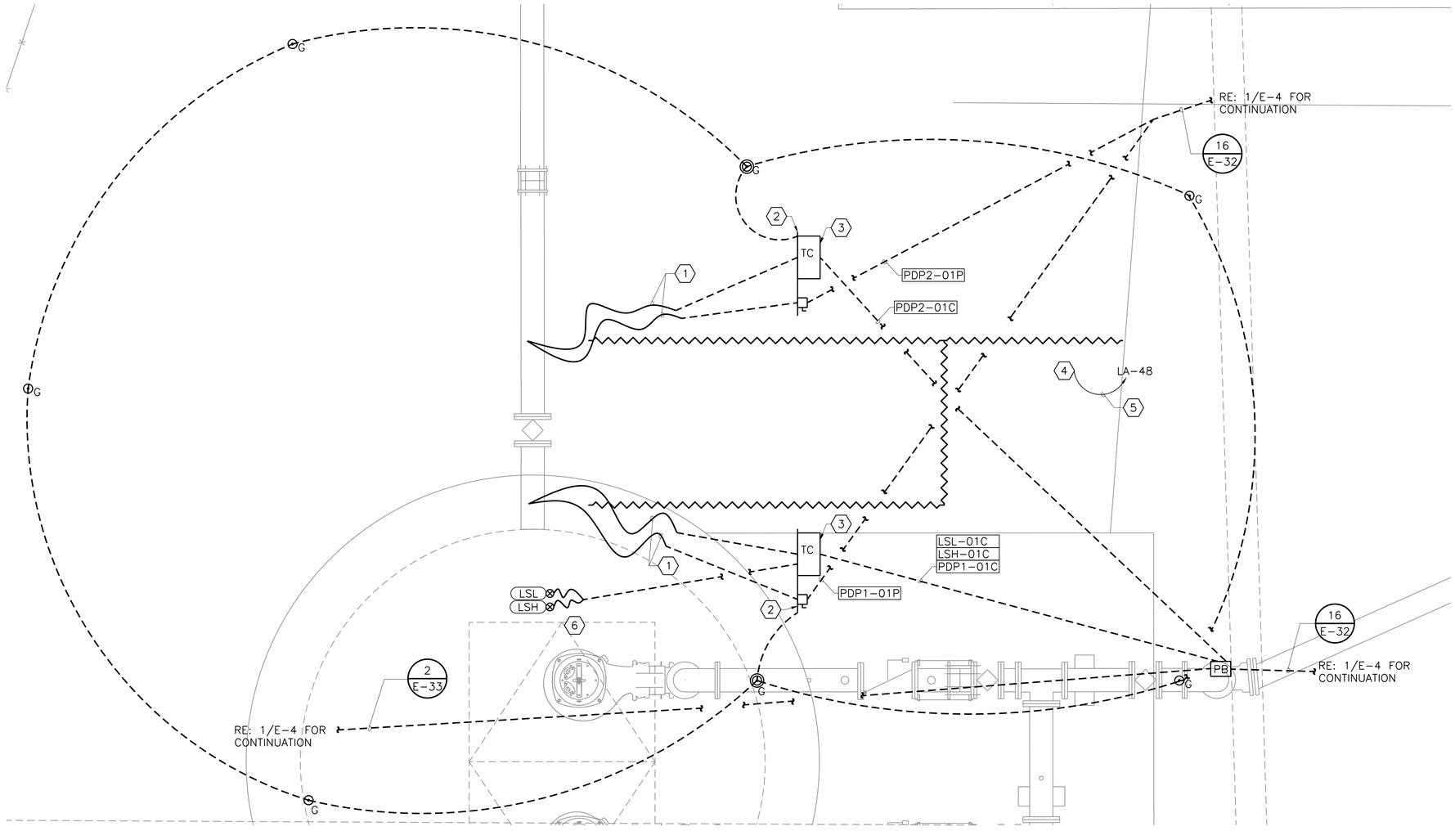

NORTH

1 PLANT DRAIN PUMP STATION
3/4"=1'-0"

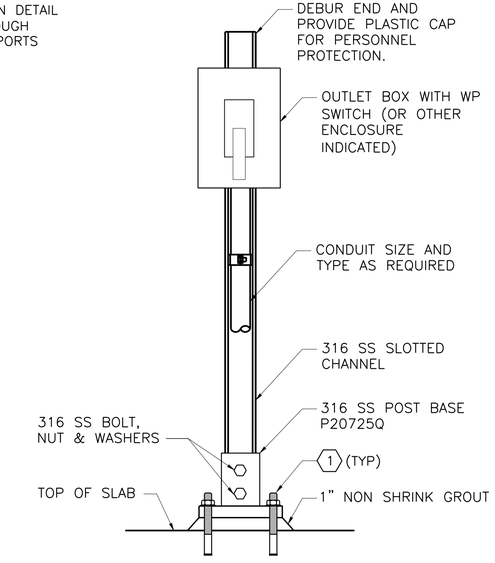

NO.2 NOTES BY SYMBOL "⬡"
1. ¾"ø 316 STAINLESS STEEL EXPOXY ANCHOR (TYP OF 4).

2 FREE STANDING SUPPORT DETAIL
NOT TO SCALE

0 6" 1' 2'
3/4"=1'-0

This Record Drawing is a combination of the sealed engineering contract drawings for this project, modified by information furnished by the contractor reflecting changes in the Project made during construction. The original sealed drawings are on file at the offices of FREESE AND NICHOLS, INC.
RECORD DRAWINGS PREPARED ON: 06/24/20

Freese and Nichols, Inc.
Texas Registered Engineering Firm F-2144

THE SEAL THAT ORIGINALLY APPEARED ON THIS DOCUMENT WAS AUTHORIZED BY JOHN W.P. MANNING, P.E. TEXAS NO. 92774 ON 06/10/2016. ALTERATION OF A SEALED DOCUMENT WITHOUT PROPER NOTIFICATION OF THE RESPONSIBLE ENGINEER IS AN OFFENSE UNDER THE TEXAS ENGINEERING PRACTICE ACT.

FREESE AND NICHOLS
4040 Broadway Street, Suite 600
San Antonio, Texas 78209-6350
Phone - (210) 298-3800
Fax - (210) 298-3801
Web - www.freese.com

CITY OF CASTROVILLE
WWTP CAPACITY EXPANSION PROJECT
ELECTRICAL
PLANT DRAIN PUMP STATION

NO.	ISSUE	BY	DATE
3	RECORD DRAWING	JWM	06/24/20
2	ISSUED FOR CONSTRUCTION	JWM	11/18/16
1	CA No.1	JWM	10/25/16

F&N JOB NO. CVL14259
DATE 6/10/16
DESIGNED JWM
DRAWN JWM
REVISED
CHECKED TWZ
FILE NAME EL-PST-PL-SLUD.dwg

VERIFY SCALE 0 1
Bar is one inch on original drawing. If not one inch on this sheet, adjust scale.

SHEET E-16
SEQ.

ACAD Rel: 23.0s (LMS Tech)
Filename: N:\ELEC\EL-PST-PL-SLUD.dwg
Last Saved: 6/22/2020 4:01 PM Saved By: 03823

Plot Date: 6/23/2020 9:53 AM Plot By: 03823 Filename: N:\ELEC\EL-PST-PL-SLUD.dwg

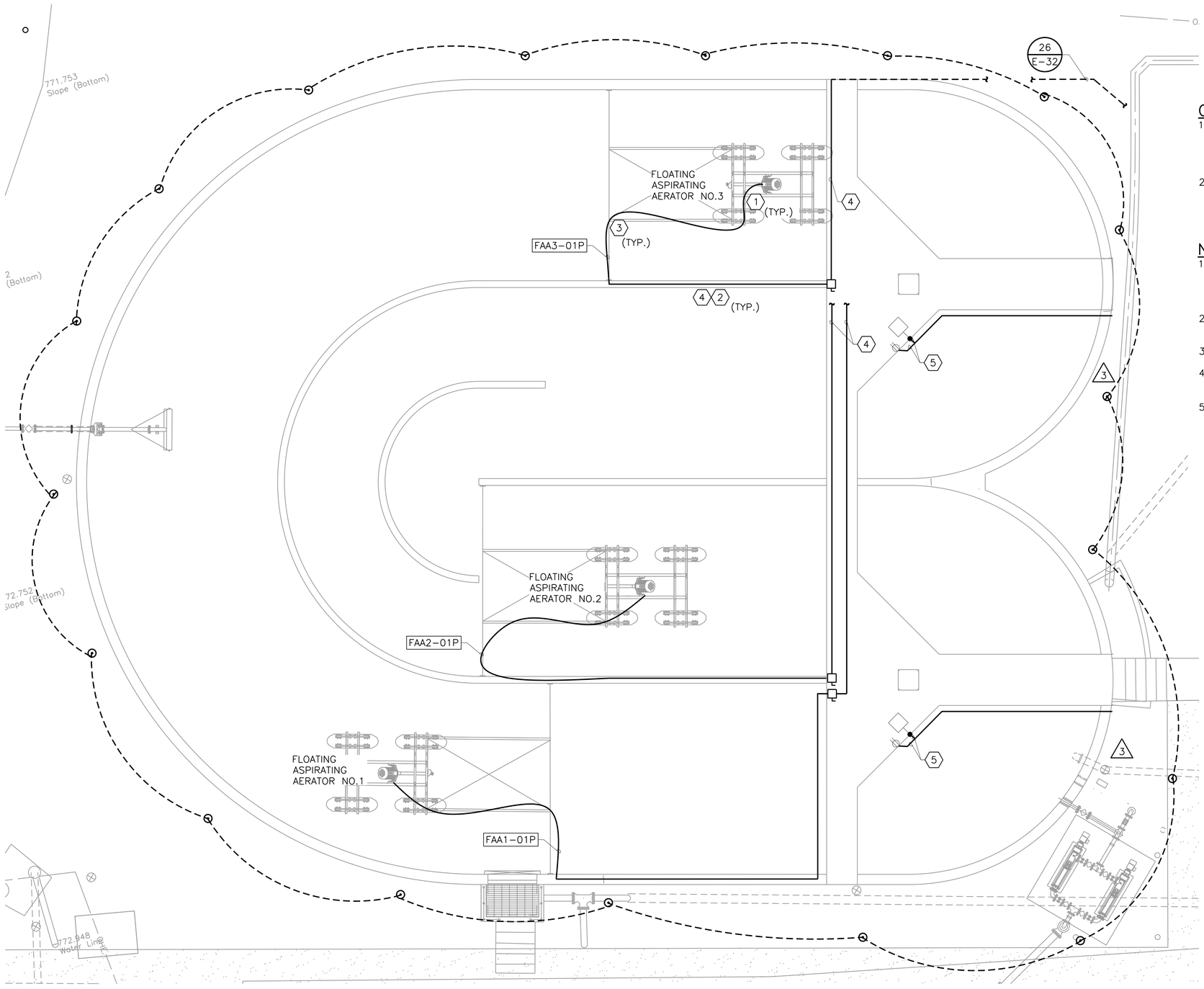

NORTH

1 / –

SLUDGE HOLDING TANK

3/16"=1'-0"

GENERAL NOTES:

1. SLUDGE HOLDING TANK IS CLASSIFIED HAZARDOUS LOCATION, CLASS I, DIV.2, GROUP D WITHIN ENVELOPE OF 18" ABOVE WATER SURFACE EXTENDING 10' HORIZONTALLY FROM WETTED WALLS. EQUIPMENT AND MATERIALS PROVIDED SHALL BE CLASSIFIED FOR THE RATED AREA.
2. EXPOSED CONDUIT MAY BE RESIZED BY CONTRACTOR, BUT MUST MEET THE REQUIREMENTS OF THE LATEST VERSION OF NATIONAL ELECTRICAL CODE.

1

NOTES BY SYMBOL "⬡"

1. MANUFACTURER SUPPLIED CABLE SHALL BE ORDERED TO LENGTH FROM MOTOR TO DISCONNECT AND SHALL NOT BE SPLICED. CONTRACTOR SHALL PROVIDE MEANS TO SUPPORT CABLE ALONG WALL AND EQUIPMENT SUPPORTS PER MANUFACTURERS RECOMMENDATIONS.
2. MANUFACTURER SUPPLIED CABLE SHALL BE ROUTED IN CONDUIT ON WALL AND ALONG WALKWAY.
3. MANUFACTURED SUPPLIED CABLE SHALL BE ATTACHED TO SUPPORT RAILS.
4. SUPORT CONDUITS ALONG WALKWAY AND WALLS USING DETAIL. RE: 2/E-17.
5. CONTRACTOR SHALL RECIRCUIT LIGHT AND RECEPTACLE TO PANEL LA. PROVIDE 2 #12, #12G. TO EACH LIGHT AND RECEPTACLE. PROVIDE LIGHT SWITCH IN ELECTRICAL ROOM FOR BASIN LIGHTS.

3

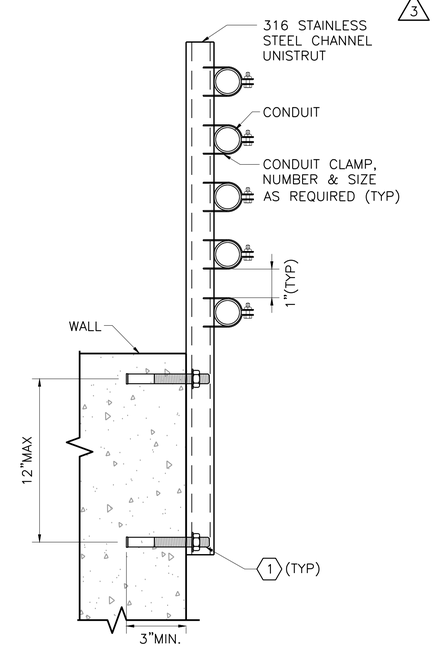

NO.2 NOTES BY SYMBOL "⬡"

1. ANCHORS SHALL BE ½"DIA ADHESIVE STAINLESS STEEL.

2 / –

WALL MOUNTED CONDUIT RACK

NOT TO SCALE

0 4' 8'

3/16"=1'-0"

This Record Drawing is a combination of the sealed engineering contract drawings for this project, modified by information furnished by the contractor reflecting changes in the Project made during construction. The original sealed drawings are on file at the offices of FREESE AND NICHOLS, INC.

RECORD DRAWINGS PREPARED ON: 06/24/20

Freese and Nichols, Inc.
Texas Registered Engineering Firm F-2144

THE SEAL THAT ORIGINALLY APPEARED ON THIS DOCUMENT WAS AUTHORIZED BY JOHN W.P. MANNING P.E. TEXAS NO.92724 ON 06/10/2016. ALTERATION OF A SEALED DOCUMENT WITHOUT PROPER NOTIFICATION OF THE RESPONSIBLE ENGINEER IS AN OFFENSE UNDER THE TEXAS ENGINEERING PRACTICE ACT.

FREESE AND NICHOLS
4040 Broadway Street, Suite 600
San Antonio, Texas 78209-6350
Phone - (210) 298-3800
Fax - (210) 298-3801
Web - www.freese.com

CITY OF CASTROVILLE

WWTP CAPACITY EXPANSION PROJECT

ELECTRICAL

SLUDGE HOLDING TANK

NO.	ISSUE	BY	DATE
4	RECORD DRAWING	JWM	06/24/20
3	PCM#5	JWM	4/14/17
2	ISSUED FOR CONSTRUCTION	JWM	11/18/16
1	CA No.1	JWM	10/25/16

F&N JOB NO. CVL14259
DATE 6/10/16
DESIGNED JWM
DRAWN JWM
REVISED
CHECKED TWZ
FILE NAME EL-SHT-PL-PWR.dwg

VERIFY SCALE 0 1
Bar is one inch on original drawing. If not one inch on this sheet, adjust scale.

SHEET E-17

SEQ.

ACAD Rel: 23.0s (LMS Tech)
Filename: N:\ELEC\EL-SHT-PL-PWR.dwg
Last Saved: 6/22/2020 4:04 PM Saved By: 03823

Plot Date: 6/23/2020 9:54 AM Plot By: 03823 Filename: N:\ELEC\EL-SHT-PL-PWR.dwg

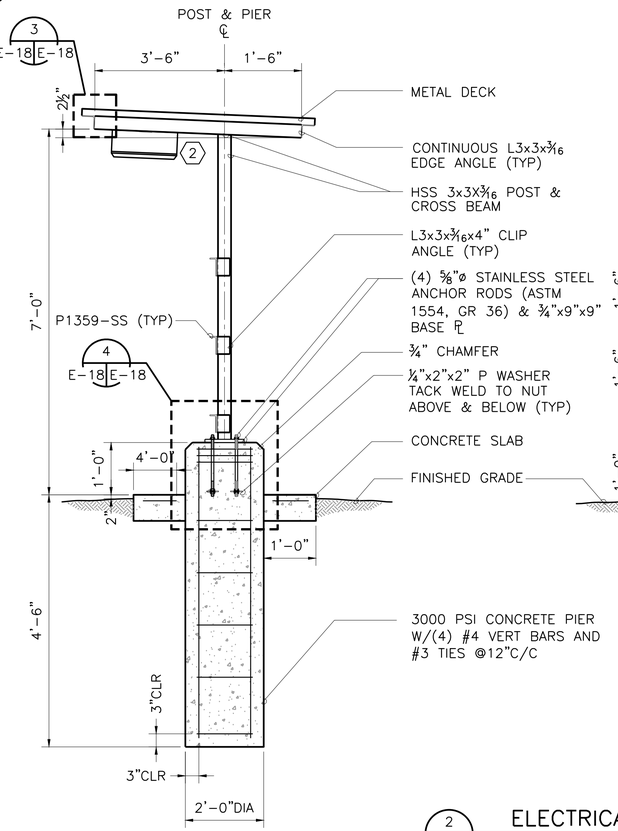

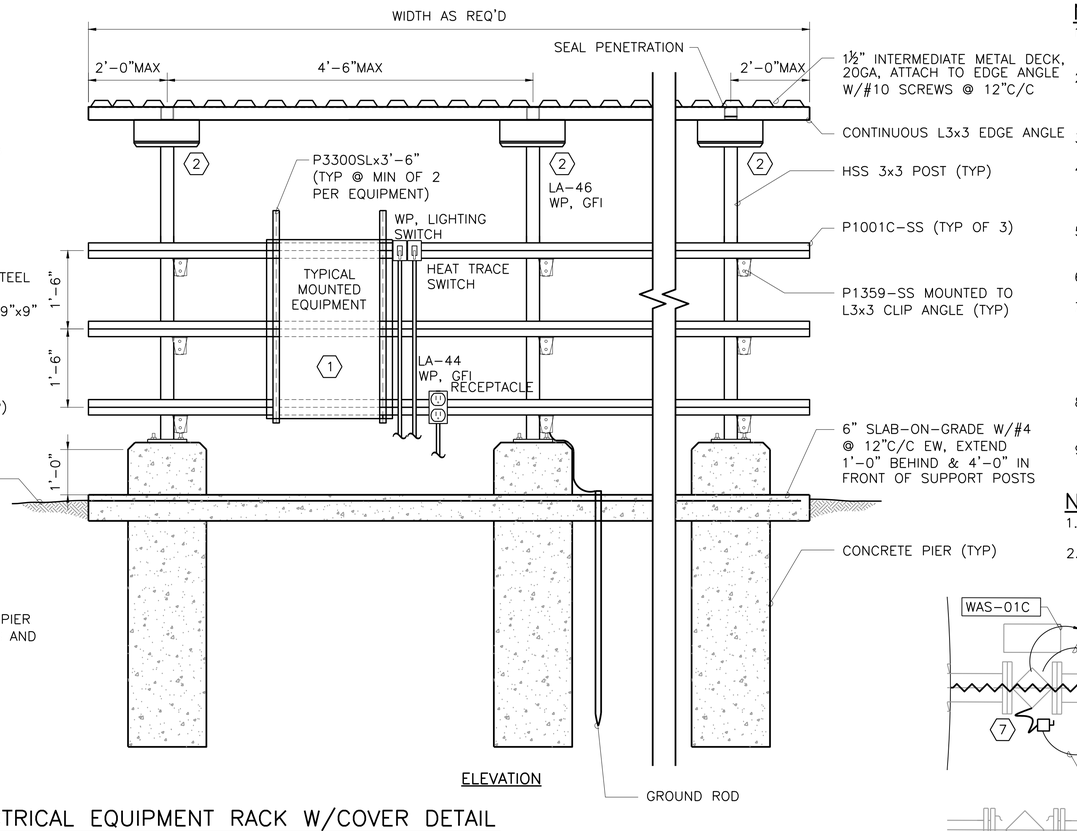

NO.2 GENERAL NOTES:

1. ALL MEMBERS SHOWN AND REQUIRED CONNECTING HARDWARE SHALL BE STAINLESS STEEL.
2. MEMBERS ARE INDICATED BY UNISTRUT PART NUMBERS. PROVIDE ALL MEMBERS AND CONNECTING HARDWARE BY UNISTRUT OR APPROVED EQUAL.
3. SLOPE SLAB-ON-GRADE TO DRAIN.
4. RACKS SHALL BE GROUNDED PER THE NATIONAL ELECTRICAL CODE. PROVIDE AS A MINIMUM ONE ¾"x10'-0" COPPER CLAD GROUND ROD ON EACH SIDE OF THE ELECTRICAL EQUIPMENT RACK.
5. ALL NUTS, BOLTS, WASHERS, OTHER FASTENERS AND HARDWARE ON ELECTRICAL EQUIPMENT RACK SHALL BE STAINLESS STEEL.
6. ALL MEMBERS SHALL BE STAINLESS STEEL.
7. METAL DECK SHALL BE GALVANIZED AND SHOP PAINTED. G90 ZINC COATING; WITH UNPAINTED TOP AND BOTTOM SURFACES CLEANED, PRETREATED AND PRIMED WITH MANUFACTURER'S BAKED-ON, LEAD- AND CHROMATE-FREE RUST-INHIBITIVE PRIMER COMPLYING WITH PERFORMANCE REQUIREMENTS OF FS TT-P-664.
8. PROVIDE (2) 9/16"ø BOLT HOLES IN OUTSTANDING LEG OF L3x3 CLIP ANGLE FOR ATTACHMENT OF UNISTRUT P1359-SS.
9. WELD CROSS BEAM TO POST WITH 3/16" FILLET AND PARTIAL PENETRATION GROVE WELDS, 5/32" EFFECTIVE THROAT.

NO.2 NOTES BY SYMBOL "⬡"

1. MOUNT EQUIPMENT AS REQUIRED PER SITE.
2. PROVIDE EATON MODEL CNC-E01-LED-E1-SQ-AP-HA-SM-8030 FIXTURE. PROVIDE 2 #12, #12G., ¾"C. FROM PANELBOARD THROUGHOUT THE CIRCUIT.

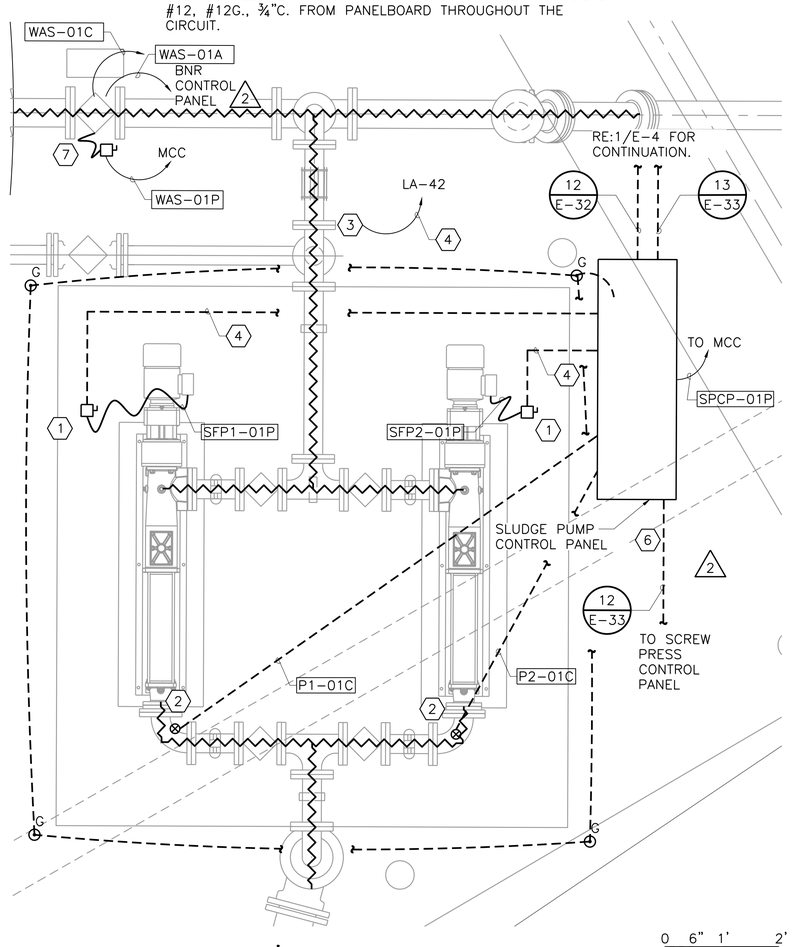

1 — SLUDGE PUMP STATION
3/4"=1'-0"

2 — ELECTRICAL EQUIPMENT RACK W/COVER DETAIL
NOT TO SCALE

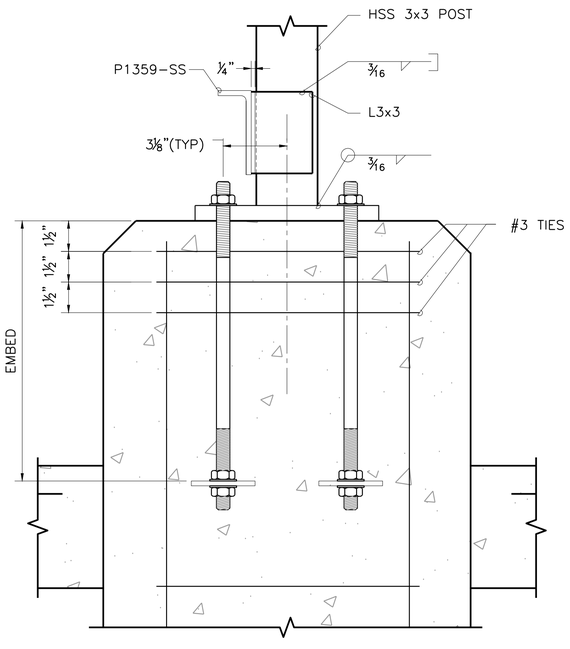

4 — DETAIL
NOT TO SCALE

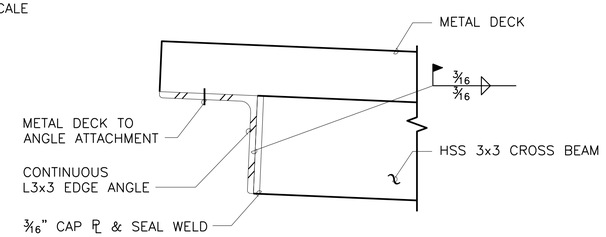

3 — DETAIL
NOT TO SCALE

NO.1 GENERAL NOTES:

1. SEE SHEET E-17 FOR GROUND GRID. CONNECT GROUND GRID TO SLUDGE PUMP CONTROL PANEL.

NO.1 NOTES BY SYMBOL "⬡"

1. PROVIDE EQUIPMENT RACK TO MOUNT DISCONNECT AND CONTROL PANEL. RE: 2/E-16 FOR UNISTRUT MOUNT.
2. MANUFACTURER SUPPLIED PRESSURE SWITCH SHALL BE INSTALLED AND WIRED BY CONTRACTOR. PROVIDE 2 #14, #14G., ¾"C.
3. PROVIDE 5W/FT HEAT TRACE WITH AMBIENT TEMPERATURE SENSING CONTROLLER. PROVIDE WEATHER PROOF SWITCH ALLOWING HEAT TRACE CIRCUIT TO BE SHUT OFF. MOUNT SWITCH TO EQUIPMENT RACK.
4. PROVIDE 2 #12, #12G., ¾"C.
5. PROVIDE 3 #12, #12G., ¾"C.
6. MOUNT CONTROL PANEL TO EQUIPMENT RACK. RE: 2/E-18 FOR ADDITIONAL DETAILS. PROVIDE PIERS ON THE FOUNDATION.
7. MOUNT DISCONNECT TO EQUIPMENT RACK. △2

This Record Drawing is a combination of the design engineer's original work for this project, modified by information furnished by the contractor reflecting changes in the construction. The design engineer has not performed any observation of the construction and the accuracy of these sealed drawings are on file at the offices of FREESE AND NICHOLS, INC.
RECORD DRAWINGS PREPARED ON: 06/24/20

Freese and Nichols, Inc.
Texas Registered Engineering Firm F-2144

THE SEAL APPEARING ON THIS DOCUMENT WAS AUTHORIZED BY JOHN W.P. MANNING, P.E. ALTERATION OF A SEALED DOCUMENT WITHOUT PROPER AUTHORIZATION AND ADDITIONAL SEAL IS A VIOLATION OF THE TEXAS ENGINEERING PRACTICE ACT

FREESE and NICHOLS
4040 Broadway Street, Suite 600
San Antonio, Texas 78209-6350
Phone (210) 298-3800
Fax (210) 298-3801
Web - www.freese.com

CITY OF CASTROVILLE
WWTP CAPACITY EXPANSION PROJECT
ELECTRICAL
SLUDGE PUMP STATION

NO.	ISSUE	BY	DATE
	RECORD DRAWING	JWM	06/24/20
2	PCM#5	JWM	4/14/17
1	ISSUED FOR CONSTRUCTION	JWM	11/18/16

VERIFY SCALE Bar is one inch on original drawing. If not one inch on this sheet, adjust scale.
0 1"

F&N JOB NO. CVL14259 | DATE 6/10/16 | DESIGNED JWM | DRAWN JWM | CHECKED TWZ | FILE NAME EL-SPB-PL-SLUD.dwg

SHEET E-18
SEQ.

ACAD Rel: 23.0s (LMS Tech)
Filename: N:\ELEC\EL-SPB-PL-SLUD.dwg
Last Saved: 6/22/2020 4:10 PM Saved By: 03823

Plot Date: 6/23/2020 9:55 AM Plot By: 03823 Filename: N:\ELEC\EL-SPB-PL-SLUD.dwg

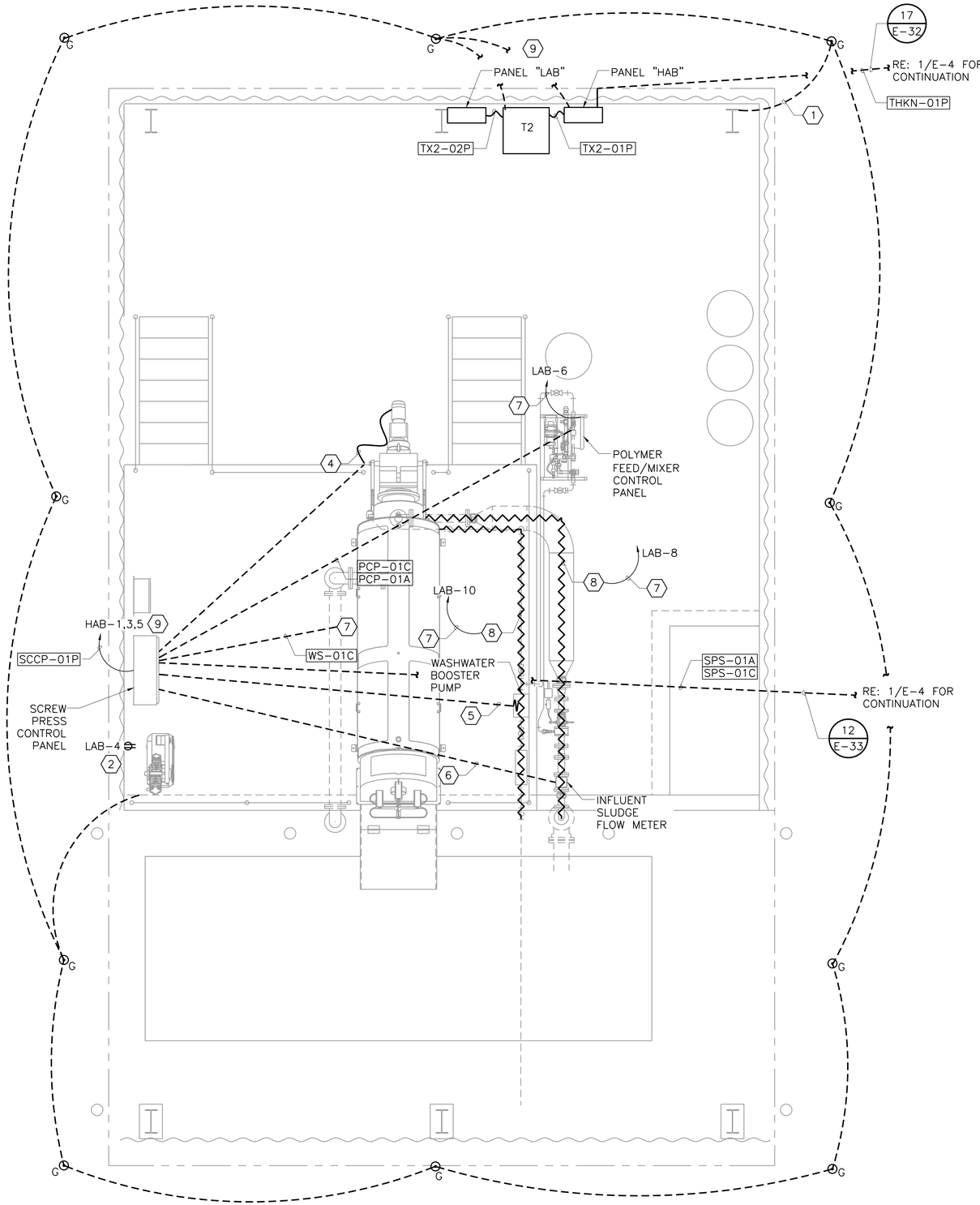

1 SLUDGE HANDLING POWER
3/8"=1'-0"

GENERAL NOTES:

1. EQUIPMENT CONDUIT STUB UP LOCATIONS SHALL BE COORDINATED WITH EQUIPMENT MANUFACTURER.
2. POWER, ANALOG, AND DISCRETE CONDUCTORS SHALL BE ROUTED IN SEPARATE CONDUITS.
3. PROVIDE LIGHTNING PROTECTION PER SPECIFICATION 26 41 13 LIGHTNING PROTECTION FOR STRUCTURES.
4. EXPOSED CONDUIT MAY BE RESIZED BY CONTRACTOR, BUT MUST MEET THE REQUIREMENTS OF THE LATEST VERSION OF NATIONAL ELECTRICAL CODE.

NOTES BY SYMBOL "⬡"

1. CONTRACTOR SHALL BOND GROUND GRID TO SLAB REBAR AND STRUCTURAL STEEL.
2. DEDICATED CIRCUIT FOR AIR COMPRESSOR.
3. PROVIDE 3 #4, #10G., 1½"C.
4. PROVIDE 3 #10, #10G., 1"C.
5. PROVIDE 3 #12, #12G., 1"C.
6. PROVIDE 2PR. #18 SHLD., 1"C.
7. PROVIDE 2 #10, #10G., 1"C.
8. PROVIDE 5W/FT SELF REGULATING HEAT TRACE WITH AMBIENT TEMPERATURE SENSING CONTROLLER.
9. PROVIDE EQUIPMENT RACK FOR PANELS. RE: 1/E-30.
10. MANUFACTURERS EQUIPMENT PROVIDED WITH JUNCTION BOX FOR ELECTRICAL TERMINATIONS. CONTRACTOR SHALL COORDINATE LOCATIONS WITH MANUFACTURER.

0 1' 2' 4'
3/8"=1'-0

This Record Drawing is a combination of the sealed engineering contract drawings for this project, modified by information furnished by the contractor reflecting changes in the Project made during construction. The original sealed drawings are on file at the offices of FREESE AND NICHOLS, INC.
RECORD DRAWINGS PREPARED ON: 06/24/20

Freese and Nichols, Inc.
Texas Registered Engineering Firm F-2144

THE SEAL THAT ORIGINALLY APPEARED ON THIS DOCUMENT WAS AUTHORIZED BY JOHN W. MANNING, P.E. TEXAS NO. 92784 ON 06/10/2016. ALTERATION OF A SEALED DOCUMENT WITHOUT PROPER NOTIFICATION OF THE RESPONSIBLE ENGINEER IS AN OFFENSE UNDER THE TEXAS ENGINEERING PRACTICE ACT.

FREESE AND NICHOLS
4040 Broadway Street, Suite 600
San Antonio, Texas 78209-6350
Phone - (210) 298-3800
Fax - (210) 298-3801
Web - www.freese.com

CITY OF CASTROVILLE
WWTP CAPACITY EXPANSION PROJECT
ELECTRICAL
SLUDGE HANDLING POWER

NO.	ISSUE	BY	DATE
3	RECORD DRAWING	JWM	06/24/20
2	ISSUED FOR CONSTRUCTION	JWM	11/18/16
1	CA No.1	JWM	10/25/16

F&N JOB NO. CVL14259
DATE 6/10/16
DESIGNED JWM
DRAWN JWM
REVISED
CHECKED TWZ
FILE NAME EL-SH-PL-PWR.dwg

VERIFY SCALE 0 1
Bar is one inch on original drawing. If not one inch on this sheet, adjust scale.

SHEET E-19
SEQ.

ACAD Rel: 23.0s (LMS Tech)
Filename: N:\ELEC\EL-SH-PL-PWR.dwg
Last Saved: 6/22/2020 4:10 PM Saved By: 03823

Plot Date: 6/23/2020 9:56 AM Plot By: 03823 Filename: N:\ELEC\EL-SH-PL-PWR.dwg

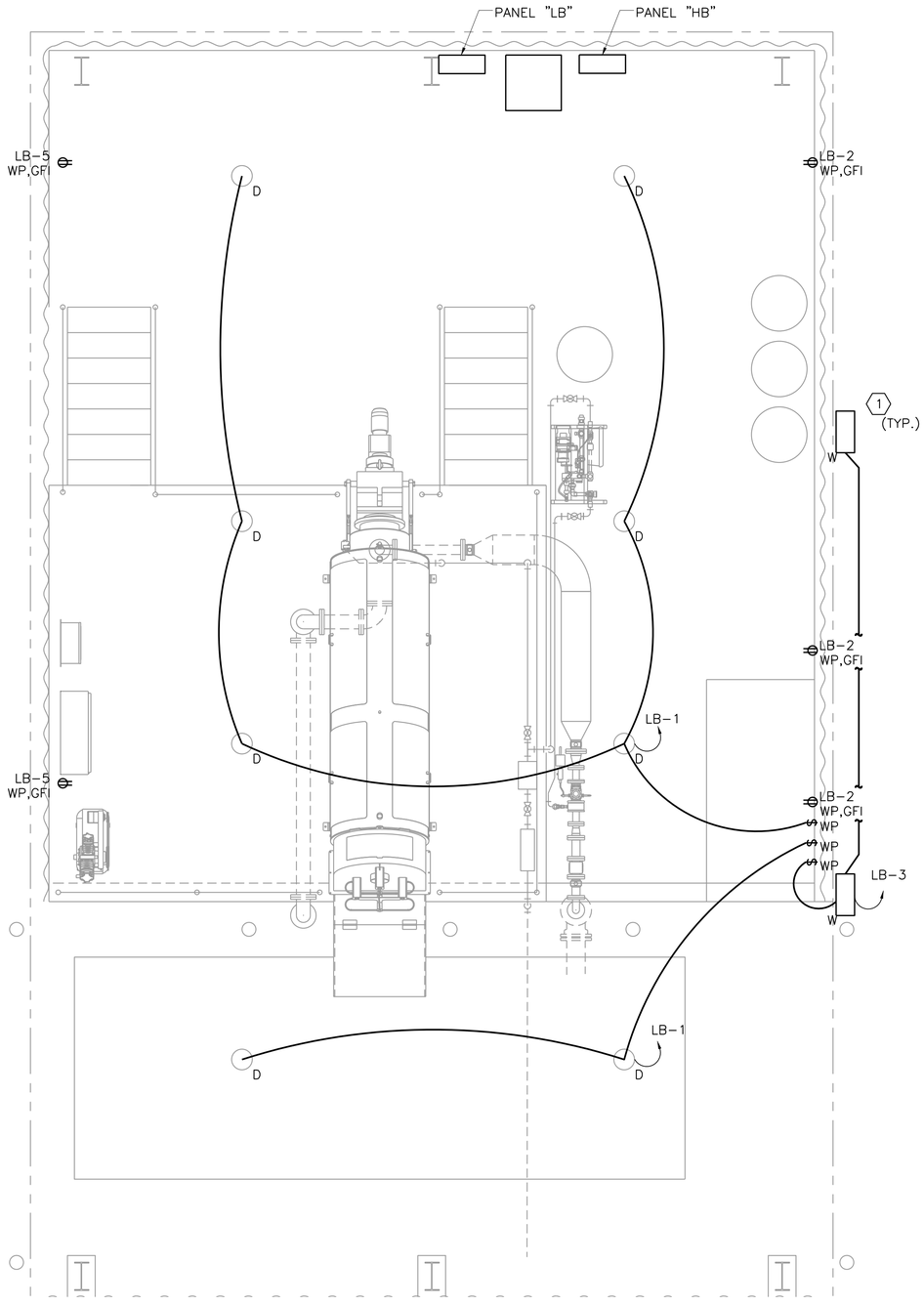

NORTH

1 / –

LIGHTING AND RECEPTACLES

3/8"=1'-0"

GENERAL NOTES:

1. CONTRACTOR SHALL PROVIDE STAINLESS STEEL MOUNTING HARDWARE FOR LIGHT FIXTURES AND OUTLET BOXES. MOUNT FIXTURES TO 316 STAINLESS STEEL UNISTRUT.
2. DISTRIBUTION EQUIPMENT AND CONTROL PANELS SHALL BE MOUNTED TO EQUIPMENT RACK. SEE DETAILS.
3. EXPOSED CONDUIT MAY BE RESIZED BY CONTRACTOR, BUT MUST MEET THE REQUIREMENTS OF THE LATEST VERSION OF THE NATIONAL ELECTRICAL CODE.

1

NOTES BY SYMBOL "⬡"

1. MOUNT WALLPACKS 10' ABOVE FINISHED ELEVATION. PROVIDE MOUNTING PLATES TO BE USED ON CORRUGATED SURFACE AND FILL VOIDS.

0 1' 2' 4'
3/8"=1'-0

This Record Drawing is a combination of the sealed engineering contract drawings for this project, modified by information furnished by the contractor reflecting changes in the Project made during construction. The original sealed drawings are on file at the offices of FREESE AND NICHOLS, INC.
RECORD DRAWINGS PREPARED ON: 06/24/20

Freese and Nichols, Inc.
Texas Registered Engineering Firm F-2144

THE SEAL THAT ORIGINALLY APPEARED ON THIS DOCUMENT WAS AUTHORIZED BY JOHN W. MANNING, P.E. TEXAS NO. 92774 ON 06/10/2016. ALTERATION OF A SEALED DOCUMENT WITHOUT PROPER NOTIFICATION OF THE RESPONSIBLE ENGINEER IS AN OFFENSE UNDER THE TEXAS ENGINEERING PRACTICE ACT.

FREESE AND NICHOLS
4040 Broadway Street, Suite 600
San Antonio, Texas 78209-6350
Phone - (210) 298-3800
Fax - (210) 298-3801
Web - www.freese.com

CITY OF CASTROVILLE
WWTP CAPACITY EXPANSION PROJECT

ELECTRICAL
SLUDGE HANDLING
LIGHTING AND RECEPTACLES

NO.	ISSUE	BY	DATE
3	RECORD DRAWING	JWM	06/24/20
2	ISSUED FOR CONSTRUCTION	JWM	11/18/16
1	CA No.1	JWM	10/25/16

F&N JOB NO. CVL14259
DATE 6/10/16
DESIGNED JWM
DRAWN JWM
REVISED
CHECKED TWZ
FILE NAME EL-SH-PL-LTG.dwg

VERIFY SCALE 0 1
Bar is one inch on original drawing. If not one inch on this sheet, adjust scale.

SHEET E-20
SEQ.

ACAD Rel: 23.0s (LMS Tech)
Filename: N:\ELEC\EL-SH-PL-LTG.dwg
Last Saved: 6/22/2020 4:11 PM Saved By: 03823

Plot Date: 6/23/2020 9:56 AM Plot By: 03823 Filename: N:\ELEC\EL-SH-PL-LTG.dwg

GENERAL NOTES:

1. ONE-LINES INDICATED ARE FOR REFERENCE ONLY. EXISTING POWER DROPS SHALL BE DEMOLISHED UNDER THIS CONTRACT AFTER NEW POWER DROP IS ESTABLISHED AND EQUIPMENT IS FUNCTIONAL.

2. EXISTING GENERATOR SHALL BE REMOVED AND RELOCATED BY THE CONTRACTOR AS REQUIRED TO BUILD THE ADMINISTRATION BUILDING. CONTRACTOR SHALL ROUTE TEMPORARY CABLES TO THE EXISTING ATS WHICH SHALL REMAIN IN SERVICE UNTIL THE NEW POWER SERVICE AND GENERATOR ARE ON SITE. THE GENERATOR SHALL REMAIN OPERATIONAL DURING CONSTRUCTION OF THE NEW PLANT TO BACKUP THE EXISTING PLANT. CONTRACTOR IS RESPONSIBLE TO PROVIDE FUEL AND SCHEDULED MAINTENANCE ON THE EXISTING GENERATOR UNTIL REMOVED FROM SERVICE.

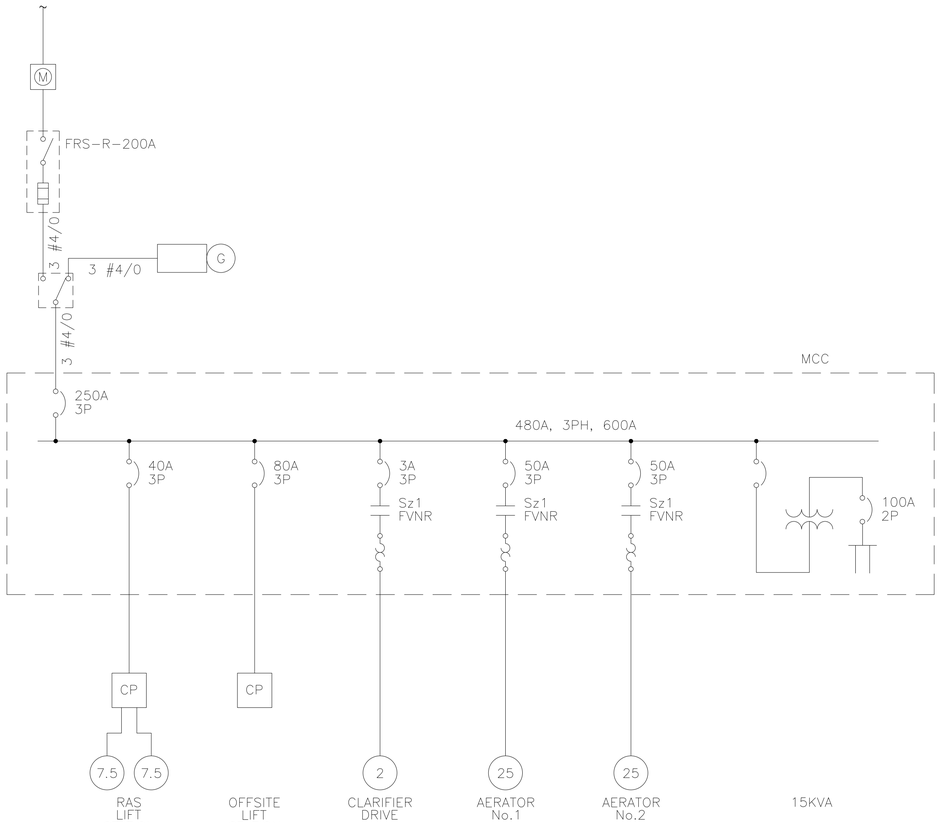

1 EXISTING MCC ONE-LINE DEMO
NOT TO SCALE

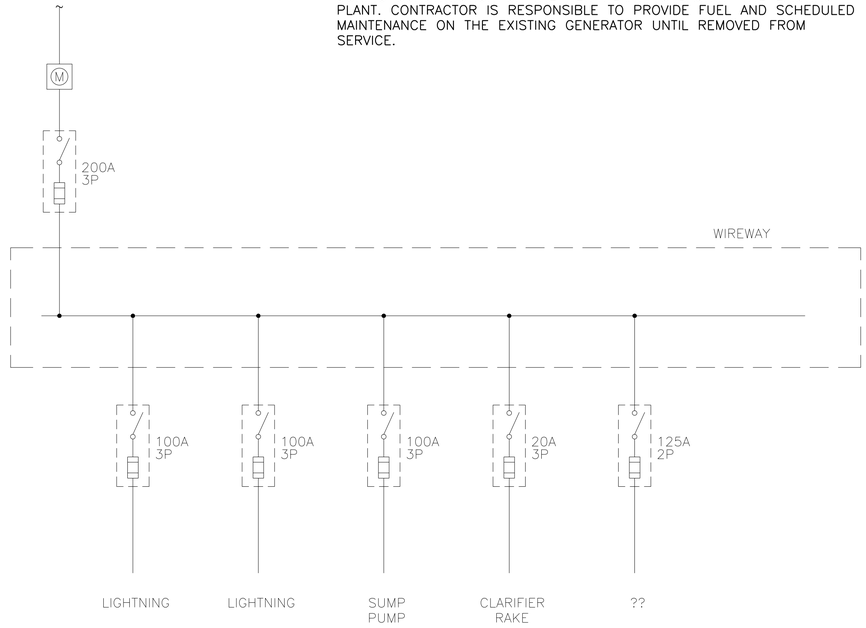

3 EXISTING EQUIPMENT RACK ONE-LINE DEMO
NOT TO SCALE

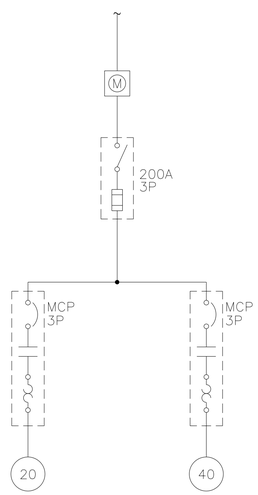

2 EXISTING WELL PUMPS ONE-LINE DEMO
NOT TO SCALE

This Record Drawing is a combination of the sealed engineering contract drawings for this project, modified by information furnished by the contractor reflecting changes in the Project made during construction. The original sealed drawings are on file at the offices of FREESE AND NICHOLS, INC.
RECORD DRAWINGS PREPARED ON: 06/24/20

Freese and Nichols, Inc.
Texas Registered Engineering Firm F-2144

THE SEAL THAT ORIGINALLY APPEARED ON THIS DOCUMENT WAS AUTHORIZED BY JOHN W. MANNING P.E. TEXAS NO. 92574 ON 06/10/2016. ALTERATION OF A SEALED DOCUMENT WITHOUT PROPER NOTIFICATION OF THE RESPONSIBLE ENGINEER IS AN OFFENSE UNDER THE TEXAS ENGINEERING PRACTICE ACT.

FREESE AND NICHOLS
4040 Broadway Street, Suite 600
San Antonio, Texas 78209-6350
Phone - (210) 298-3800
Fax - (210) 298-3801
Web - www.freese.com

CITY OF CASTROVILLE
WWTP CAPACITY EXPANSION PROJECT
ELECTRICAL
ONE-LINE DIAGRAM I

NO.	ISSUE	BY	DATE
2	RECORD DRAWING	JWM	06/24/20
1	ISSUED FOR CONSTRUCTION	JWM	11/18/16

VERIFY SCALE Bar is one inch on original drawing. If not one inch on this sheet, adjust scale.

F&N JOB NO.	CVL14259
DATE	6/10/16
DESIGNED	JWM
DRAWN	JWM
REVISED	
CHECKED	TWZ
FILE NAME	EL-ALL-OA-ONEL.dwg

SHEET E-21
SEQ.

ACAD Rel: 23.0s (LMS Tech)
Filename: N:\ELEC\EL-ALL-OA-ONEL.dwg
Last Saved: 6/22/2020 4:12 PM Saved By: 03823

Plot Date: 6/23/2020 9:56 AM Plot By: 03823 Filename: N:\ELEC\EL-ALL-OA-ONEL.dwg

NOTES BY SYMBOL "⬡"

1. PROVIDE VFD CABLE.
2. SPD MANUFACTURE SHALL SIZE CIRCUIT BREAKER.
3. MINIMUM 350KW GENERATOR. MANUFACTURER TO SIZE BASED ON LOADS IDENTIFIED IN SPECIFICATION. CONTRACTOR SHALL MAKE MODIFICATIONS TO CONDUCTOR AND CONDUIT SIZES AS REQUIRED BY NEC SHOULD GENERATOR SIZE INCREASE. CIRCUIT BREAKER IN GENERATOR SHALL BE SIZED AS RECOMMENDED BY THE GENERATOR MANUFACTURER.
4. PROVIDE 480Y/277V AUTOMATIC TRANSFER SWITCH, SERVICE ENTRANCE RATED FOR 800A.
5. PROVIDE PUSH TO TEST INDICATION LIGHTS ON MCC BUCKET DOOR FOR PUMP 1 RUNNING, PUMP 1 STOPPED, PUMP 2 RUNNING, PUMP 2 STOPPED. INDICATION LIGHTS SHALL BE WIRED TO TERMINAL BLOCKS AND LABELED. LIGHTS WILL BE POWERED AND CONTROLLED FROM EXTERNAL 120V POWER SOURCE. BUCKET DOOR SHALL INDICATE 2ND POWER SOURCE INTO BUCKET. PROVIDE LABELS FOR INDICATION LIGHTS.

GENERAL NOTES:

1. EQUIPMENT POWER RATINGS SHOWN ON THE ONE-LINE ARE APPROXIMATE AND MAY VARY BASED ON THE MANUFACTURER SUPPLIED FOR THIS PROJECT. THE CONTRACTOR SHALL BE RESPONSIBLE TO VERIFY THE NUMBER OF FEEDERS AND AMPACITIES REQUIRED BASED ON THE ACTUAL MANUFACTURERS EQUIPMENT BEING PROVIDED.
2. CONTRACTOR SHALL COORDINATE POWER SERVICE WITH CPS.
3. CONTRACTOR SHALL PROVIDE TEMPORARY POWER FOR TO KEEP THE NEW OR EXISTING PLANT RUNNING AT ALL TIMES. THE EXISTING GENERATOR MAY BE USED BUT THE CONTRACTOR IS RESPONSIBLE FOR FUEL AND MAINTENANCE OF THE GENERATOR. PLANNED SHUT DOWN OF THE PLANT SHALL BE COORDINATED WITH THE PLANT OPERATOR AT LEAST TWO WEEKS IN ADVANCE.

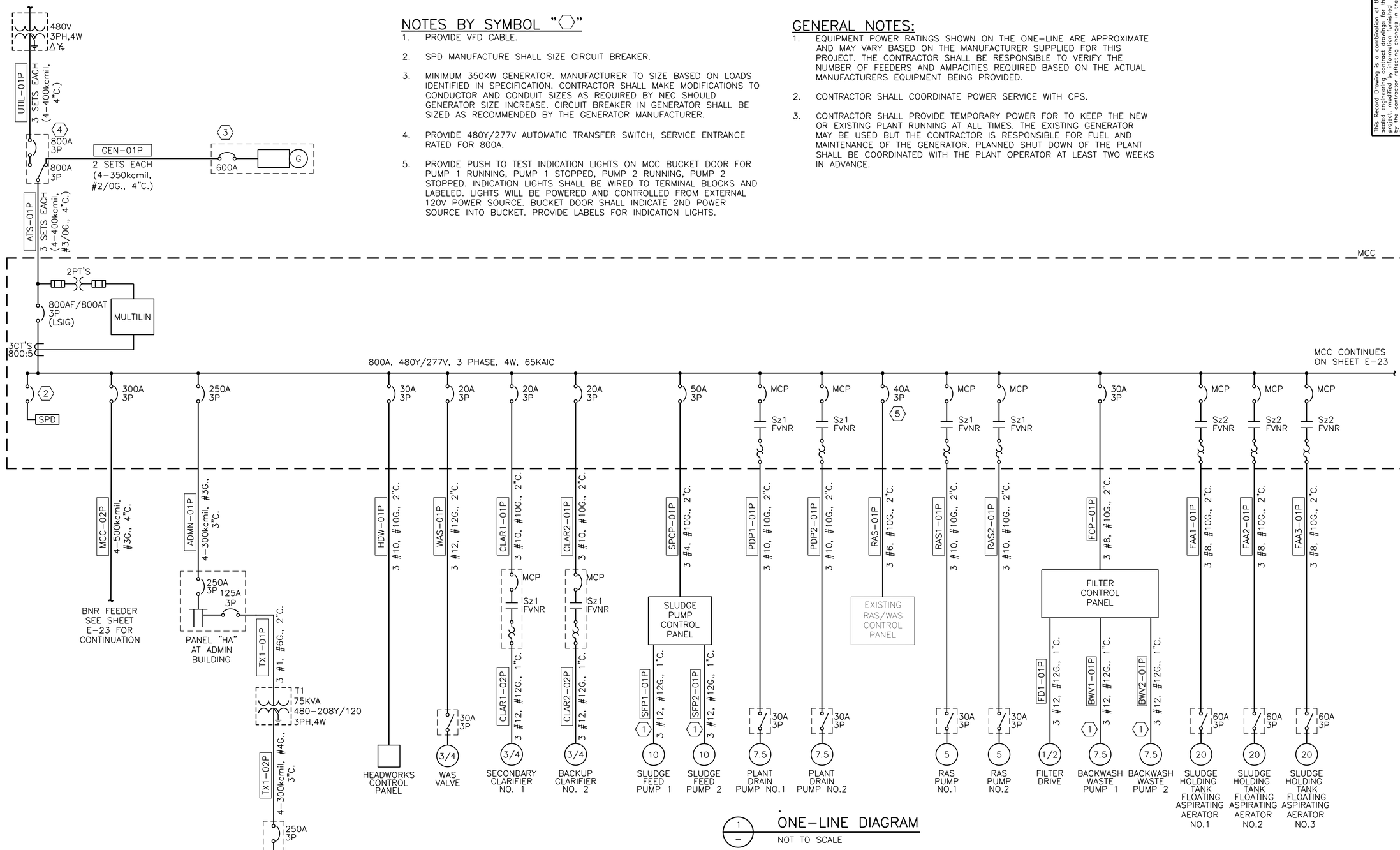

1 ONE-LINE DIAGRAM
NOT TO SCALE

This Record Drawing is a combination of the sealed engineering construction plans for this project, modified by information furnished by the contractor reflecting changes in the field during construction. Reproduction of original sealed drawings are on file at the offices of FREESE AND NICHOLS, INC.
RECORD DRAWINGS PREPARED ON: 06/24/20

Freese and Nichols, Inc.
Texas Registered Engineering Firm F-2144

THE SEAL INK ORIGINALLY APPEARED ON THE DOCUMENT WAS AUTHORIZED BY JOHN W.P. MANNING, P.E.
ALTERATION OF A SEALED DOCUMENT WITHOUT PROPER AUTHORIZATION AND ADDITIONAL SEAL IS A VIOLATION OF THE TEXAS ENGINEERING PRACTICE ACT

FREESE NICHOLS
4040 Broadway Street, Suite 600
San Antonio, Texas 78209-6350
Phone (210) 298-3800
Fax (210) 298-3838
Web - www.freese.com

CITY OF CASTROVILLE
WWTP CAPACITY EXPANSION PROJECT
ELECTRICAL
ONE-LINE DIAGRAM II

NO.	ISSUE	BY	DATE
1	RECORD DRAWING	JWM	06/24/20
0	ISSUED FOR CONSTRUCTION	JWM	11/18/16

VERIFY SCALE Bar is one inch on original drawing. If not one inch on this sheet, adjust scale.
0 1"

F&N JOB NO. CVL14259
DATE 6/10/16
DESIGNED JWM
DRAWN JWM
CHECKED TWZ
FILE NAME EL-ALL-DG-ONEL.dwg

SHEET E-22
SEQ.

ACAD Rel: 23.0s (LMS Tech)
Filename: N:\ELEC\EL-ALL-DG-ONEL.dwg
Last Saved: 6/22/2020 4:12 PM Saved By: 03823

Plot Date: 6/23/2020 9:56 AM Plot By: 03823 Filename: N:\ELEC\EL-ALL-DG-ONEL.dwg

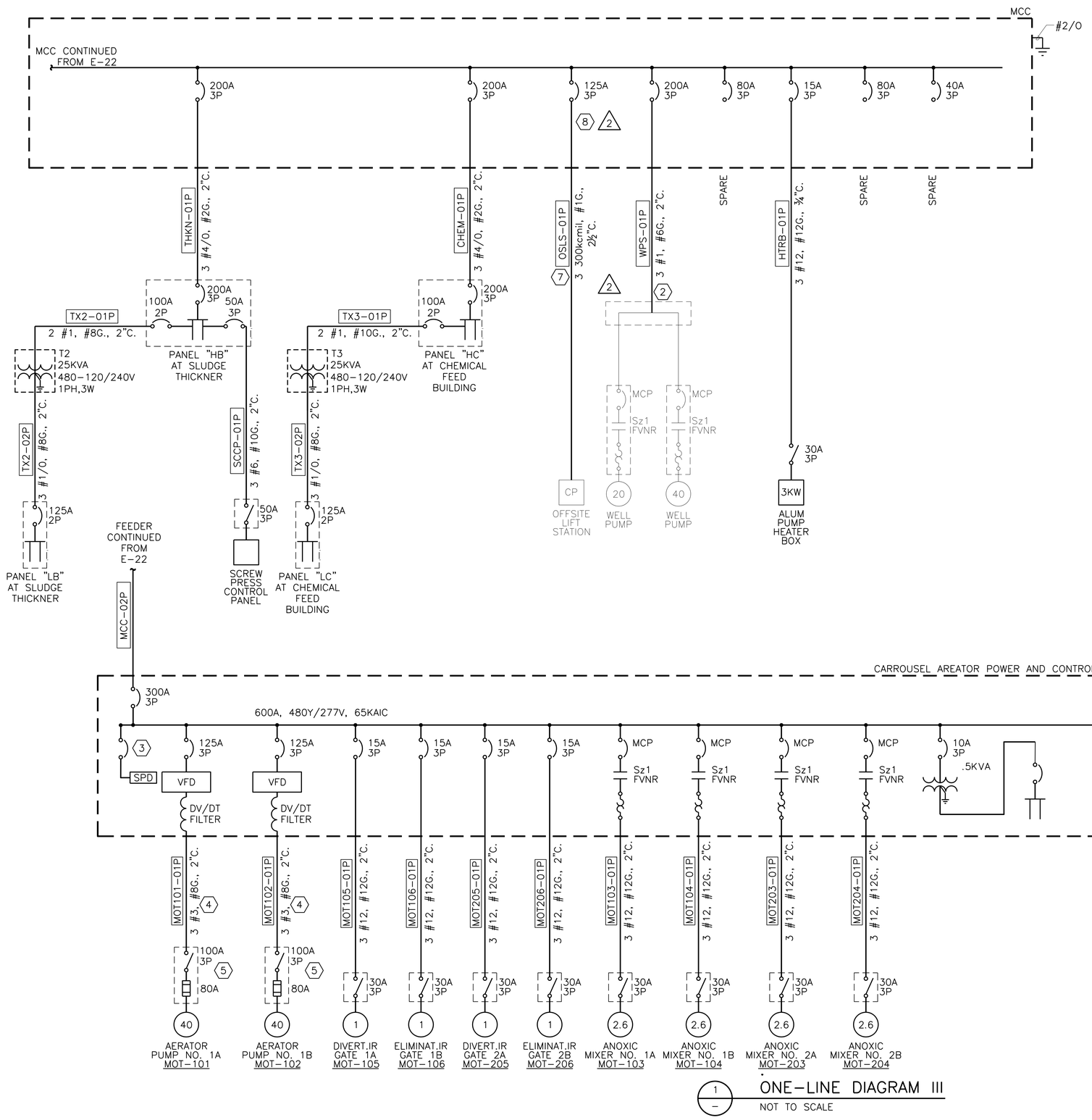

1 — ONE-LINE DIAGRAM III
NOT TO SCALE

NOTES BY SYMBOL "⬡"

1. EQUIPMENT INSIDE THE DASHED LINE OF THE CARROUSEL SYSTEM IS SUPPLIED BY THE MANUFACTURER. CONTRACTOR SHALL COORDINATE WITH MANUFACTURER PRIOR TO BIDDING TO ENSURE A COMPLETE SYSTEM. CONTRACTOR SHALL BE RESPONSIBLE TO INSTALL ALL EQUIPMENT SUPPLIED BY THE MANUFACTURER AND PROVIDE THE REQUIRED EQUIPMENT NOT SUPPLIED BY THE MANUFACTURER.
2. CONTRACTOR SHALL PROVIDE INSULATED POLARIS TAPS FOR SPLICE CONNECTION IN WIRE WAY. WRAP TAP IN ADDITIONAL MOISTURE SEALING TAPE AND PVC TAPE.
3. SPD MANUFACTURER SHALL SIZE OVERLOAD PROTECTION.
4. PROVIDE VFD CABLE.
5. CONTRACTOR SHALL PROVIDE NEMA 4X, 304L STAINLESS STEEL, HEAVY DUTY, FUSED DISCONNECT WITH FAST ACTING AUXILIARY CONTACTS THAT OPEN BEFORE THE DISCONNECT DISENGAGES.
6. MANUFACTURER SUPPLIED EQUIPMENT. CONTRACTOR SHALL COORDINATE WITH MANUFACTURER FOR EQUIPMENT DIMENSIONS, MOUNTING, ETC.
7. OFFSITE LIFT STATION IS APPROXIMATELY 1700' FROM EXISTING MCC. CONTRACTOR SHALL PROVIDE NEW CONDUIT TO HANDHOLE IDENTIFIED ON SITE PLAN DRAWING AND REUSE THE REMAINING CONDUITS AFTER PULLING OUT THE OLD CONDUCTORS. EXISTING CONDUIT IS 2-1/2". CONTRACTOR SHALL ASK FOR 1988 WASTEWATER TREATMENT PLANS THAT IDENTIFY THE CONDUIT ROUTING AND PULL BOX LOCATIONS. ⬡2
8. PROVIDE PUSH TO TEST INDICATION LIGHTS ON MCC BUCKET DOOR FOR PUMP 1 RUNNING, PUMP 1 STOPPED, PUMP 2 RUNNING, PUMP 2 STOPPED. INDICATION LIGHTS SHALL BE WIRED TO TERMINAL BLOCKS AND LABELED. LIGHTS WILL BE POWERED AND CONTROLLED FROM EXTERNAL 120V POWER SOURCE. BUCKET DOOR SHALL INDICATE 2ND POWER SOURCE INTO BUCKET. PROVIDE LABELS FOR INDICATION LIGHTS.

GENERAL NOTES:

1. UNLESS STATED OTHERWISE, DISCONNECTS SHALL BE HEAVY DUTY, NEMA 4X, 304L STAINLESS STEEL.

This Record Drawing is a combination of the sealed engineering construction plans for this project, modified by information furnished by the contractor reflecting changes in the project construction. The contractor and his consultants provide no warranty as to the completeness of these sealed drawings are on file at the offices of
FREESE AND NICHOLS, INC.
RECORD DRAWINGS PREPARED ON:
06/24/20

Freese and Nichols, Inc.
Texas Registered Engineering Firm F-2144

THE SEAL (INK) ORIGINALLY APPEARED ON THE DOCUMENT WAS AUTHORIZED BY JOHN W.P. MANNING, P.E. ON 06/24/2020. IT IS A VIOLATION OF A SEALED DOCUMENT WITHOUT PROPER ALTERATION OF A SEALED DOCUMENT WITHOUT PROPER NOTIFICATION TO THE ENGINEER. THE ENGINEER IS NOT RESPONSIBLE FOR ANY ADDED OR DELETED INFORMATION TO THE ORIGINAL SEALED DRAWINGS. IT IS A VIOLATION OF THE TEXAS ENGINEERING PRACTICE ACT TO ALTER THIS DOCUMENT IN ANY WAY FOR ANY REASON OFFENSE UNDER THE TEXAS ENGINEERING PRACTICE ACT

FREESE NICHOLS
4040 Broadway Street, Suite 600
San Antonio, Texas 78209-6350
Phone (210) 298-3800
Fax (210) 298-3801
Web - www.freese.com

CITY OF CASTROVILLE
WWTP CAPACITY EXPANSION PROJECT
ELECTRICAL
ONE-LINE DIAGRAM III

NO.	ISSUE	BY	DATE
	RECORD DRAWING	JWM	06/24/20
2	PCM NO. 9	JWM	7/14/17
1	ISSUED FOR CONSTRUCTION	JWM	11/18/16

AN JOB NO.	CVL14259
DATE	6/10/16
DESIGNED	JWM
DRAWN	JWM
REVISED	
CHECKED	TWZ
FILE NAME	EL-ALL-OA-ONEL3.dwg

VERIFY SCALE Bar is one inch on original drawing. If not one inch on this sheet, adjust scale.
0 1"

SHEET E-23
SEQ.

ACAD Rel: 23.0s (LMS Tech)
Filename: N:\ELEC\EL-ALL-OA-ONEL3.dwg
Last Saved: 6/22/2020 4:13 PM Saved By: 03823

Plot Date: 6/23/2020 9:56 AM Plot By: 03823 Filename: N:\ELEC\EL-ALL-OA-ONEL3.dwg

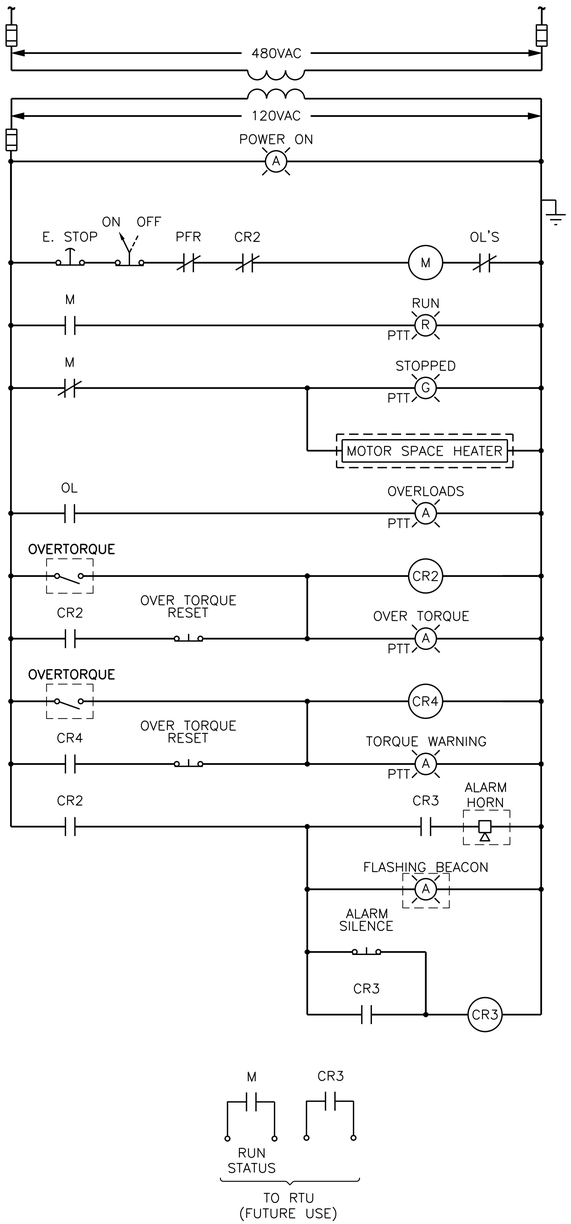

1 – CLARIFIER DRIVE CONTROL SCHEMATIC

NOT TO SCALE

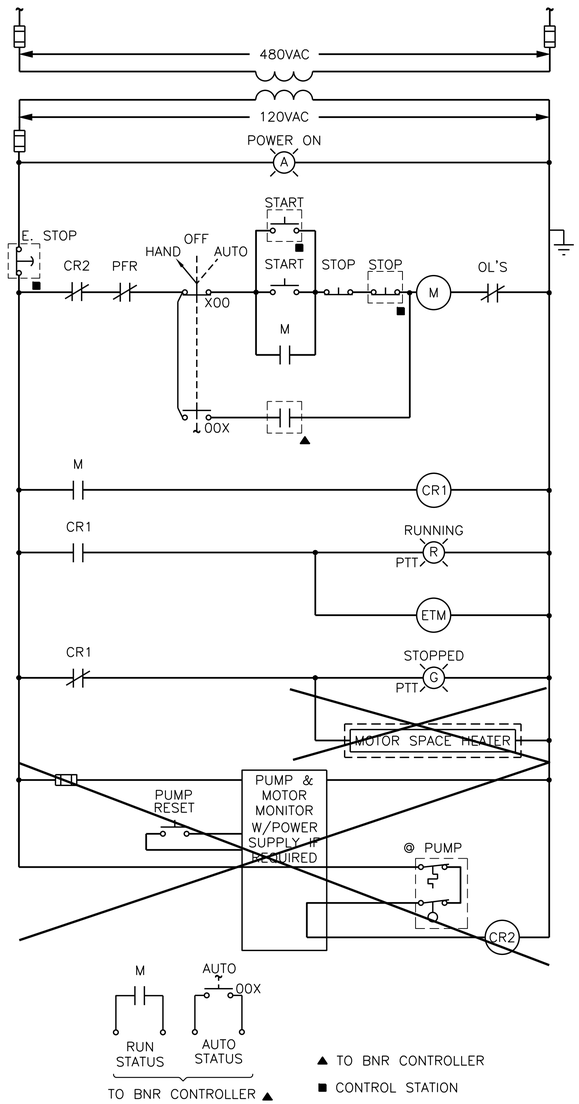

2 – RAS/WAS PUMP CONTROL SCHEMATIC

NOT TO SCALE

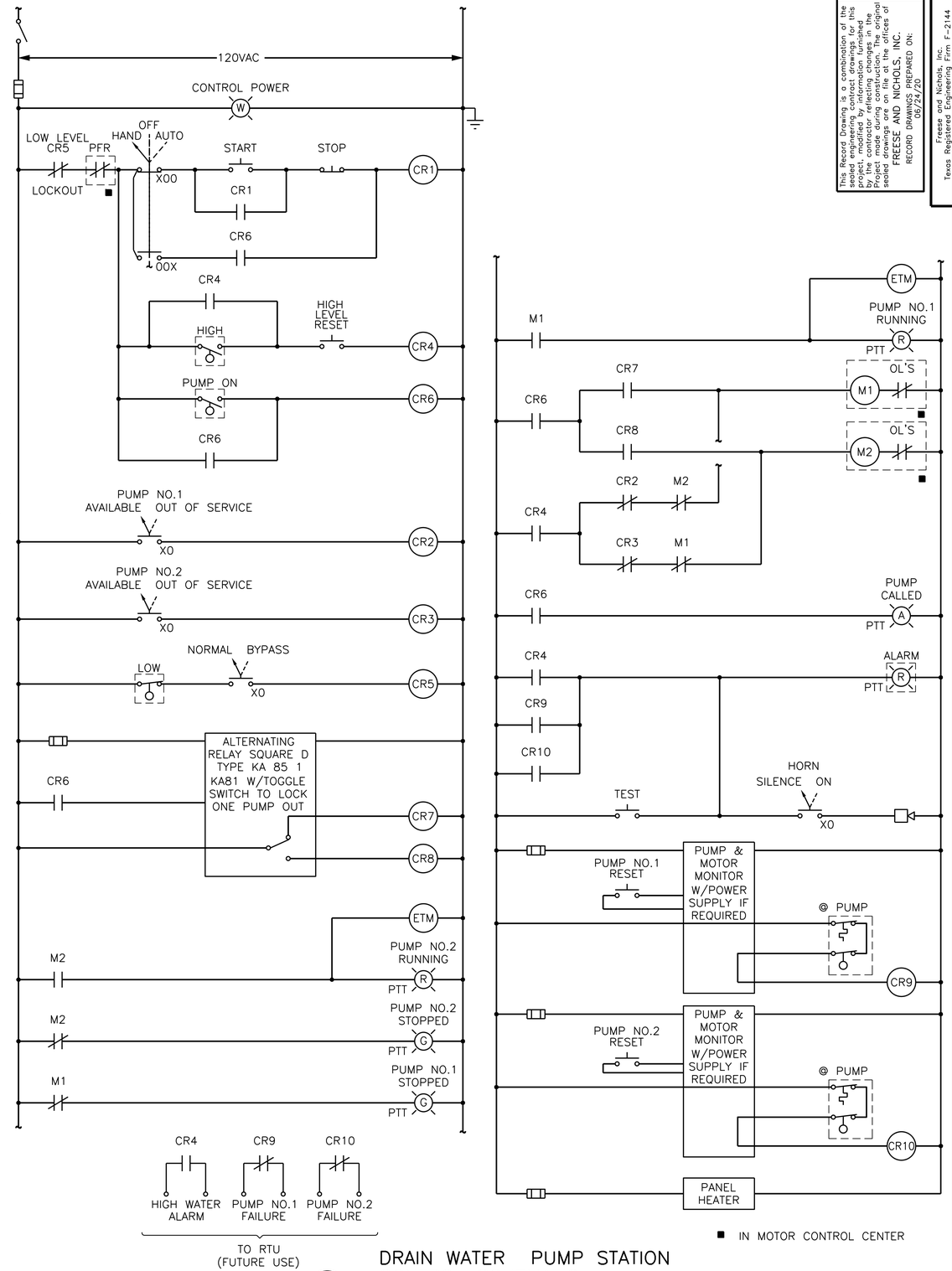

3 – DRAIN WATER PUMP STATION CONTROL SCHEMATIC

NOT TO SCALE

This Record Drawing is a combination of the sealed engineering contract drawings for this project, modified by information furnished by the contractor reflecting changes in the Project made during construction. The original sealed drawings are on file at the offices of FREESE AND NICHOLS, INC.
RECORD DRAWINGS PREPARED ON: 06/24/20

Freese and Nichols, Inc.
Texas Registered Engineering Firm F-2144

THE SEAL THAT ORIGINALLY APPEARED ON THIS DOCUMENT WAS AUTHORIZED BY JOHN W.P. MANNING, P.E. TEXAS NO. 92774 ON 06/10/2016. ALTERATION OF A SEALED DOCUMENT WITHOUT PROPER NOTIFICATION OF THE RESPONSIBLE ENGINEER IS OFFENSE UNDER THE TEXAS ENGINEERING PRACTICE ACT.

FREESE AND NICHOLS
4040 Broadway Street, Suite 600
San Antonio, Texas 78209-6350
Phone - (210) 298-3800
Fax - (210) 298-3801
Web - www.freese.com

CITY OF CASTROVILLE
WWTP CAPACITY EXPANSION PROJECT
ELECTRICAL
CONTROL SCHEMATICS I

NO.	ISSUE	BY	DATE
3	RECORD DRAWING	JWM	06/24/20
2	PCM 12	MPS	03/31/20
1	ISSUED FOR CONSTRUCTION	JWM	11/18/16

F&N JOB NO. CVL14259
DATE 6/10/16
DESIGNED JWM
DRAWN JWM
REVISED
CHECKED TWZ
FILE NAME EL-OA-ALL-CTRL1.dwg

VERIFY SCALE 0 1
Bar is one inch on original drawing. If not one inch on this sheet, adjust scale.

SHEET E-24
SEQ.

ACAD Rel: 23.0s (LMS Tech)
Filename: N:\ELEC\EL-OA-ALL-CTRL1.dwg
Last Saved: 6/22/2020 4:14 PM Saved By: 03823

Plot Date: 6/23/2020 9:56 AM Plot By: 03823 Filename: N:\ELEC\EL-OA-ALL-CTRL1.dwg

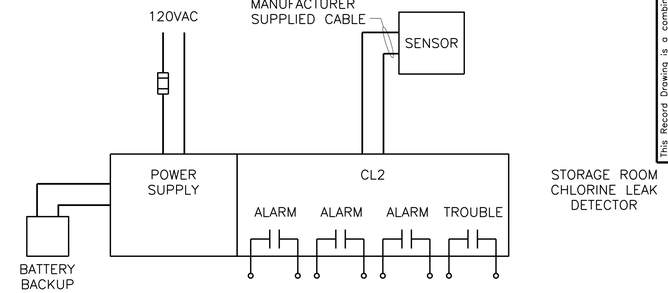

STORAGE ROOM CHLORINE LEAK DETECTOR

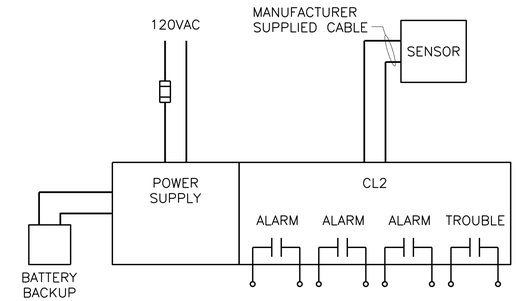

FEED ROOM CHLORINE LEAK DETECTOR

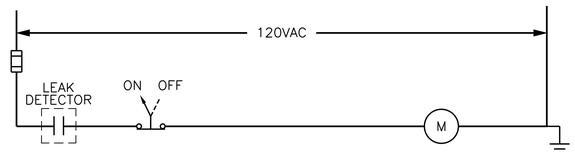

TYPICAL CHEMICAL ROOM EXHAUST FAN LOGIC CONTROL SCHEMATIC

2 –

NOT TO SCALE

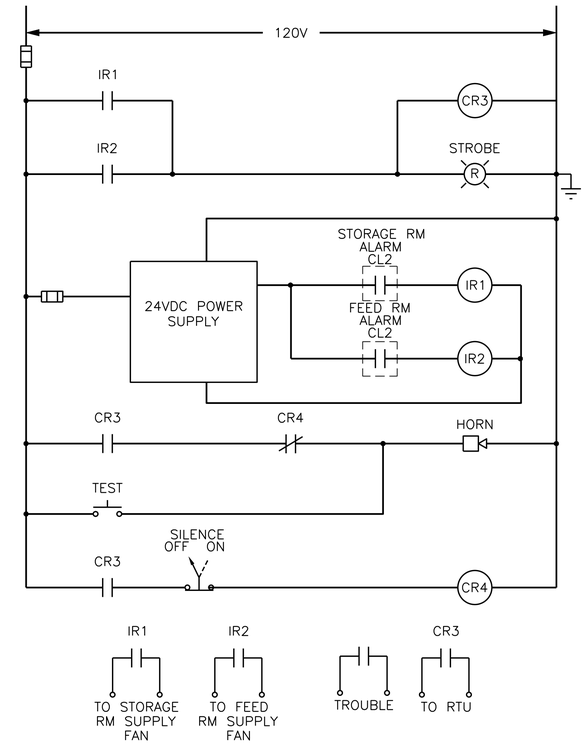

LEAK DETECTION CONTROL SCHEMATIC

3 –

NOT TO SCALE

This Record Drawing is a combination of the sealed engineering contract drawings for this project, modified by information furnished by the contractor reflecting changes in the Project made during construction. The original sealed drawings are on file at the offices of FREESE AND NICHOLS, INC.

RECORD DRAWINGS PREPARED ON: 06/24/20

Freese and Nichols, Inc.
Texas Registered Engineering Firm F-2144

THE SEAL THAT ORIGINALLY APPEARED ON THIS DOCUMENT WAS AUTHORIZED BY JOHN P. MANNING, P.E. TEXAS NO. 92574 ON JUL 10/2016. ALTERATION OF A SEALED DOCUMENT WITHOUT PROPER NOTIFICATION OF THE RESPONSIBLE ENGINEER IS AN OFFENSE UNDER THE TEXAS ENGINEERING PRACTICE ACT.

FREESE AND NICHOLS

4040 Broadway Street, Suite 600
San Antonio, Texas 78209-6350
Phone - (210) 298-3800
Fax - (210) 298-3801
Web - www.freese.com

CITY OF CASTROVILLE

WWTP CAPACITY EXPANSION PROJECT

ELECTRICAL

CONTROL SCHEMATICS II

NO.	ISSUE	BY	DATE
3	RECORD DRAWING	JWM	06/24/20
2	PCM No.5	GTN	04/18/17
1	ISSUED FOR CONSTRUCTION	JWM	11/18/16

F&N JOB NO. CVL14259
DATE 6/10/16
DESIGNED JWM
DRAWN JWM
REVISED
CHECKED TWZ
FILE NAME EL-ALL-OA-CNTRL2.dwg

VERIFY SCALE 0 1 Bar is one inch on original drawing. If not one inch on this sheet, adjust scale.

SHEET E-25

SEQ.

ACAD Rel: 23.0s (LMS Tech)
Filename: N:\ELEC\EL-ALL-OA-CNTRL2.dwg
Last Saved: 6/22/2020 4:14 PM Saved By: 03823

Plot Date: 6/23/2020 9:56 AM Plot By: 03823 Filename: N:\ELEC\EL-ALL-OA-CNTRL2.dwg

PANEL NO. HA

SERVICE VOLTAGE 480/277 VOLTS — MAIN 250 AMPS M.C.B. — LOCATION ADMINISTRATION BUILDING
A.I.C. 65,000 — BUS RATING 400 AMPS
NEUTRAL BUS 400 AMPS — FEED FROM PANEL "MCC2"

DESCRIPTION	BREAKER POLE	BREAKER AMP	VOLT AMPS A	VOLT AMPS B	VOLT AMPS C	CKT NO	BUSS CONN	CKT NO	VOLT AMPS A	VOLT AMPS B	VOLT AMPS C	BREAKER POLE	BREAKER AMP	DESCRIPTION
AHU-1	3	20	1773.3			1		2	1000			3	30	SURGE PROTECTION DEVICE
				1773.3		3		4		1000				
					1773.3	5		6			1000			
ACCU-1	3	20	4046			7		8	1000			3	20	SPARE
				4046		9		10		1000				
					4046	11		12			1000			
SPARE	3	20	1000			13		14	1000			3	20	SPARE
				1000		15		16		1000				
					1000	17		18			1000			
SPARE	3	20	1000			19		20	1000			3	20	SPARE
				1000		21		22		1000				
					1000	23		24			1000			
SPACE						25		26						SPACE
SPACE						27		28						SPACE
SPACE						29		30						SPACE
SPACE						31		32						SPACE
SPACE						33		34						SPACE
SPACE						35		36						SPACE
SPACE						37		38	12685			3	125	TRANSFORMER "T1"
SPACE						39		40		13085				
SPACE						41		42			14099			
CONNECTED BUS A 24,505 VA			7819.3	7819.3	8819.3				16685	17085	18099			DEMAND KVA: 78.7
CONNECTED BUS B 24,905 VA														DEMAND AMPS: 94.6
CONNECTED BUS C 26,919 VA														NOTE: * INDICATES GFI BREAKER

TOTAL: 76328 VA

PANEL NO. LA

SERVICE VOLTAGE 208Y/120 VOLTS — MAIN 250 AMPS M.C.B. — LOCATION ADMINISTRATION BUILDING
A.I.C. 14,000 — BUS RATING 400 AMPS
NEUTRAL BUS 400 AMPS — FEED FROM PANEL "HA"

DESCRIPTION	BREAKER POLE	BREAKER AMP	VOLT AMPS A	VOLT AMPS B	VOLT AMPS C	CKT NO	BUSS CONN	CKT NO	VOLT AMPS A	VOLT AMPS B	VOLT AMPS C	BREAKER POLE	BREAKER AMP	DESCRIPTION
CLARIFIER LIGHTING	1	20	275			1		2	1000			3	30	SURGE PROTECTION DEVICE
HEADWORKS LIGHTING	1	20		393		3		4		1000				
ADMIN. EXTERIOR LIGHTING	1	20			156	5		6			1000			
FILTER LIGHTING	1	20	236			7		8	682			1	20	ADMIN. INTERIOR LIGHTING
FILTER RECEPTACLES	1	20		180		9		10		540		1	20	ELEC. ROOM RECEPTACLES
FILTER RECEPTACLES	1	20			180	11		12			1080	1	20	OFFICE LAB RECEPTACLES
BNR 1 LIGHTING	1	20	589			13		14	720			1	20	OFFICE RECEPTACLES
BNR 2 LIGHTING	1	20		589		15		16		540		1	20	OFFICE COMPUTER
BNR 1 RECEPTACLES	1	20			180	17		18			180	1	20	OFFICE PRINTER
BNR 2 RECEPTACLES	1	20	180			19		20	180			1	20*	OFFICE REFRIGERATOR
GENERATOR JACKET HEATER	2	60		2000		21		22		180		1	20	SHOWER ROOM RECEPTACLES
					2000	23		24			360	1	20	ADMIN. EXTERIOR RECEPTACLES
GENERATOR BATTERY CHARGER	1	20	1000			25		26	360			1	20	ADMIN. EXTERIOR RECEPTACLES
ALUM PUMP	1	20		500		27		28		400		1	20*	BNR MOTOR SPACE HEATERS GFI
ALUM PUMP	1	20			500	29		30			1000	1	20*	MOT-101 GEARBOX HEATER GFI
HEADWORKS LOWER LIGHTING	1	20	100			31		32	1000			1	20*	MOT-102 GEARBOX HEATER GFI
HEADWORKS LOWER RECEPTACLE	1	20		180		33		34		1000		1	20*	MOT-201 GEARBOX HEATER GFI
HEADWORKS FLOW METERS	1	20			500	35		36			1000	1	20*	MOT-202 GEARBOX HEATER GFI
HEADWORKS HEAT TRACE GFI	1	30*	600			37		38	1000			1	30*	RAS PUMP STATION HEAT TRACE GFI
FILTER HEAT TRACE GFI	1	20*		600		39		40		500		1	20	LIGHTING CONTACTOR
RTU	1	20			500	41		42			600	1	20*	SLUDGE PUMP STATION HEAT TRACE GFI
EUH-E-1 .75KW	1	20	750			43		44	180			1	20	SLUDGE PUMP STATION RECEPTACLE
EUH-E-2 2KW	2	20		750		45		46		100		1	20	SLUDGE PUMP STATION LIGHTING
					750	47		48			600	1	20*	PLANT DRAIN PUMP STATION HEAT TRACE GFI
WATER HEATER WH1	3	20	1333.3			49		50	500			1	20	PLANT DRAIN PUMP STATION LEVEL RELAY PANEL
				1333.3		51		52		300		1	20	HEADWORKS EQUIPMENT RACK LIGHTING
					1333.3	53		54			180	1	20	HEADWORKS EQUIPMENT RACK RECEPTACLES
SPARE	1	20	1000			55		56	1000			1	20	SPARE
SPARE	1	20		1000		57		58		1000		1	20	SPARE
SPARE	1	20			1000	59		60			1000	1	20	SPARE
SPACE						61		62						SPACE
SPACE						63		64						SPACE
SPACE						65		66						SPACE
SPACE						67		68						SPACE
SPACE						69		70						SPACE
SPACE						71		72						SPACE
SPACE						73		74						SPACE
SPACE						75		76						SPACE
SPACE						77		78						SPACE
SPACE						79		80						SPACE
SPACE						81		82						SPACE
SPACE						83		84						SPACE
CONNECTED BUS A 12,685 VA			6063.3	7525.3	7099.3				6622	5560	7000			DEMAND KVA: 40.1
CONNECTED BUS B 13,085 VA														DEMAND AMPS: 111.4
CONNECTED BUS C 14,099 VA														NOTE: * INDICATES GFI BREAKER

TOTAL: 39870 VA

LIGHTING FIXTURE SCHEDULE

TYPE	MANUFACTURER	CATALOG NO.	VOLT.	DESCRIPTION	LAMPS	INPUT WATTS
A	HOLOPHANE	HZL1NL-L48-5000LM-L/LENS-120-10K-90CRI-WH	120	LED LIGHT FIXTURE, 48" LENGTH, WITH LENS, 5000 LUMEN, 4000K, 90CRI WHITE PAINT FINISH	LED	42
AE	HOLOPHANE	HZL1NL-L48-5000LM-L/LENS-120-10K-90CRI-E7W-WH	120	LED LIGHT FIXTURE, 48" LENGTH, WITH LENS, 5000 LUMEN, 4000K, 90CRI WHITE PAINT FINISH WITH EMERGENCY BATTERY PACK	LED	42
B	HOLOPHANE	FIXTURE: PMLED-3-5K-10A-AS-65-1-K-GP POLE: ST7-2400-PS	120	FIXTURE: SMALL PREDATOR LED EXTERIOR FIXTURE WITH DIE-CAT ALUMINUM HOUSING, GLASS LENS, BRONZE FINISH POLE: SWIVEL POLE WITH MOUNTING HARDWARE	LED	80
D	LDPI	LE203-3-V1-4-ARF-SM-SL	120	LED CORROSION RESISTANT SUITABLE FOR INTERIOR/EXTERIOR APPLICATIONS. VAPOR TIGHT, GASKETED, SURFACE MOUNT, 4' FIXTURE	LED	32
E	HUBBEL	HBL-48-U-X-5-35K-W-070-ND-BL-ENCG-SL BLA-C4HLPX	120	LED HIGH BAY, GLASS LENS, BLACK HOUSING, CORD AND PLUG SET	LED	140
W	HOLOPHANE	W4GLED-10C-1000-50K-T3M-120-BZSDP	120	LED EXTERIOR WALLPACK FIXTURE WITH DIE-CAST ALUMINUM HOUSING, GLASS LENS, TYPE III DISTRIBUTION, 10 LEDS, 1000mA DRIVER, AND BRONZE FINISH	LED	39
2 WE	LITHONIA	DSXW1 LED-10C-1000-50K-TM3-120-DMG-PIR1FC3V-DDBXD	120	LED EXTERIOR WALLPACK FIXTURE WITH DIE-CAST ALUMINUM HOUSING, GLASS LENS, TYPE III DISTRIBUTION, 10 LEDS, 1000mA DRIVER, 0-10V DIMMING DRIVER, 180 MOTION/AMBIENT LIGHT SENSOR <15' MOUTNING HEIGHT, AMBIENT SENSOR ENABLED AT 1FC, WITH EMERGENCY BATTERY BACKUP, BRONZE FINISH	LED	40
X	HOLOPHANE	CZA11LT-W-LP06VS-LTP-SD	120	TWIN ADJUSTABLE HEAD EMERGENCY LIGHT FIXTURE, WHITE THERMOPLASTIC, LITHIUM ION BATTERY.	LED	5.4

LIGHTING FIXTURE SCHEDULE NOTES:

1. LIGHT FIXTURES PROVIDED SHALL BE APPROVED EQUAL TO THE FIXTURE INDICATED IN THE SCHEDULE ABOVE.
2. FIXTURE MODEL NUMBERS ARE USED TO ESTABLISH MINIMUM QUALITY AND PERFORMANCE STANDARDS AND NOT TO ESTABLISH MOUNTING TYPE. MOUNTING REQUIREMENTS MAY VARY FOR THE SAME TYPE OF FIXTURE THROUGHOUT THE PROJECT. CONTRACTOR SHALL VERIFY INSTALLATION LOCATION AND PROVIDE APPROPRIATE MOUNTING HARDWARE FIXTURE TYPE DESIGN FOR EACH LOCATION.

This Record Drawing is a combination of the sealed engineering construction plans for this project, modified by information furnished by the contractor reflecting changes in the project made during construction. The original sealed drawings are on file at the offices of FREESE AND NICHOLS, INC.
RECORD DRAWINGS PREPARED ON: 06/24/20

Freese and Nichols, Inc.
Texas Registered Engineering Firm F-2144

THE SEAL HAS ORIGINALLY APPEARED ON THIS DOCUMENT WAS AUTHORIZED BY JOHN W.P. MANNING, P.E. ON 6/24/2020. IT IS A VIOLATION OF LAW FOR ANY PERSON TO ALTER THIS SEALED DOCUMENT WITHOUT PROPER AUTHORIZATION AND PROPER NOTIFICATION OF THE ALTERATION BY A LICENSED ENGINEER. ANY ALTERATION IS AN OFFENSE UNDER THE TEXAS ENGINEERING PRACTICE ACT.

FREESE NICHOLS
4040 Broadway Street, Suite 600
San Antonio, Texas 78209-6350
Phone (210) 298-3800
Fax (210) 298-3838
Web - www.freese.com

CITY OF CASTROVILLE
WWTP CAPACITY EXPANSION PROJECT
ELECTRICAL
PANELBOARD SCHEDULES I

NO.	ISSUE	BY	DATE
	RECORD DRAWING	JWM	06/24/20
2	PCM No.5	GTN	04/18/17
1	ISSUED FOR CONSTRUCTION	JWM	11/18/16

VERIFY SCALE Bar is one inch on original drawing. If not one inch on this sheet, adjust scale.
0 1"

FAN JOB NO. CVL14259 — DATE 6/10/16 — DESIGNED JWM — DRAWN JWM — CHECKED TWZ
FILE NAME EL-ALL-SCH-PNLS.dwg

SHEET E-26
SEQ.

ACAD Rel: 23.0s (LMS Tech)
Filename: N:\ELEC\EL-ALL-SCH-PNLS.dwg
Last Saved: 6/22/2020 4:16 PM Saved By: 03823

Plot Date: 6/23/2020 9:57 AM Plot By: 03823 Filename: N:\ELEC\EL-ALL-SCH-PNLS.dwg

PANEL NO. HAB

SERVICE VOLTAGE 480Y/277 VOLTS | A.I.C. 65,000 | MAIN 200 AMPS | BUS RATING AMPS | NEUTRAL BUS AMPS | LOCATION SLUDGE BUILDING | FEED FROM

DESCRIPTION	BREAKER POLE	BREAKER AMP	VOLT AMPS A	VOLT AMPS B	VOLT AMPS C	CKT NO	BUSS CONN	CKT NO	VOLT AMPS A	VOLT AMPS B	VOLT AMPS C	BREAKER POLE	BREAKER AMP	DESCRIPTION
SCREW PRESS	3	50	8313			1		2	9000			2	100	TRANSFORMER
				8313		3		4		8000				
					8313	5		6						SPACE
SPARE	3	20	1000			7		8	1000			3	20	SPARE
				1000		9		10		1000				
					1000	11		12			1000			
SPARE	3	20	1000			13		14	1000			3	20	SPARE
				1000		15		16		1000				
					1000	17		18			1000			
SPACE						19		20						SPACE
SPACE						21		22						SPACE
SPACE						23		24						SPACE
SPACE						25		26						SPACE
SPACE						27		28						SPACE
SPACE						29		30						SPACE
SPACE						31		32						SPACE
SPACE						33		34						SPACE
SPACE						35		36						SPACE
SPACE						37		38	1000			3		SPACE
SPACE						39		40		1000			60	SPD
SPACE						41		42			1000			

CONNECTED BUS A 22,313 VA | CONNECTED BUS B 21,313 VA | CONNECTED BUS C 13,313 VA
10313 | 10313 | 10313 — TOTAL: 56939 VA — 12000 | 11000 | 3000
DEMAND KVA: 63.2 | DEMAND AMPS: 76.0
NOTE: * INDICATES GFI BREAKER

PANEL NO. LAB

SERVICE VOLTAGE 120/240 VOLTS | A.I.C. 10,000 | MAIN 200 AMPS | BUS RATING AMPS | NEUTRAL BUS AMPS | LOCATION SLUDGE BUILDING | FEED FROM

DESCRIPTION	BREAKER POLE	BREAKER AMP	VOLT AMPS A	VOLT AMPS B	CKT NO	BUSS CONN	CKT NO	VOLT AMPS A	VOLT AMPS B	BREAKER POLE	BREAKER AMP	DESCRIPTION
INTERIOR LIGHTING	1	20	100		1		2	540		1	20	RECEPTACLES
EXTERIOR LIGHTING	1	20		100	3		4		2880	1	30	COMPRESSOR
RECEPTACLES	1	20	360		5		6	2880		1	30	POLYMER SYSTEM
SPARE	1	20		1000	7		8		1000	1	20	HEAT TRACE
SPARE	1	20	1000		9		10	1000		1	20	HEAT TRACE
SPARE	1	20		1000	11		12		1000	1	20	SPARE
SPARE	1	20	1000		13		14	1000		1	20	SPARE
SPACE					15		16		1000	1	20	SPARE
SPACE					17		18					SPACE
SPACE					19		20					SPACE
SPACE					21		22					SPACE
SPACE					23		24					SPACE
SPACE					25		26					SPACE
SPACE					27		28					SPACE
SPACE					29		30					SPACE
SPACE					31		32					SPACE
SPACE					33		34					SPACE
SPACE					35		36					SPACE
SPACE					37		38					SPACE
SPACE					39		40		1000	2		SPD
SPACE					41		42	1000			40	

CONNECTED BUS A 8,880 VA | CONNECTED BUS B 8,980 VA
2460 | 2100 — TOTAL: 17860 VA — 6420 | 6880
DEMAND KVA: 17.9 | DEMAND AMPS: 74.4
NOTE: * INDICATES GFI BREAKER

PANEL NO. HAC

SERVICE VOLTAGE 480Y/277 VOLTS | A.I.C. 65,000 | MAIN 200 AMPS | BUS RATING AMPS | NEUTRAL BUS AMPS | LOCATION CHEMICAL BUILDING | FEED FROM

DESCRIPTION	BREAKER POLE	BREAKER AMP	VOLT AMPS A	VOLT AMPS B	VOLT AMPS C	CKT NO	BUSS CONN	CKT NO	VOLT AMPS A	VOLT AMPS B	VOLT AMPS C	BREAKER POLE	BREAKER AMP	DESCRIPTION
EUH-C-1 10KW UNIT HEATER	3	20	3333			1		2	11864			2	100	TRANSFORMER
				3333		3		4		12306				
					3333	5		6						SPACE
WATER HEATER	3	20	3333			7		8	33200			3	150	NON POTABLE WATER SYSTEM
				3333		9		10		33200				
					3333	11		12			33200			
SPARE	3	20	1000			13		14	1000			3	20	SPARE
				1000		15		16		1000				
					1000	17		18			1000			
SPACE						19		20						SPACE
SPACE						21		22						SPACE
SPACE						23		24						SPACE
SPACE						25		26						SPACE
SPACE						27		28						SPACE
SPACE						29		30						SPACE
SPACE						31		32						SPACE
SPACE						33		34						SPACE
SPACE						35		36						SPACE
SPD	3	40	1000			37		38						SPACE
				1000		39		40						SPACE
					1000	41		42						SPACE

CONNECTED BUS A 54,730 VA | CONNECTED BUS B 55,172 VA | CONNECTED BUS C 42,866 VA
8666 | 8666 | 8666 — TOTAL: 152768 VA — 46064 | 46506 | 34200
DEMAND KVA: 170.6 | DEMAND AMPS: 205.2
NOTE: * INDICATES GFI BREAKER

PANEL NO. LAC

SERVICE VOLTAGE 120/240 VOLTS | A.I.C. 10,000 | MAIN 125 AMPS | BUS RATING AMPS | NEUTRAL BUS AMPS | LOCATION CHEMICAL BUILDING | FEED FROM

DESCRIPTION	BREAKER POLE	BREAKER AMP	VOLT AMPS A	VOLT AMPS B	CKT NO	BUSS CONN	CKT NO	VOLT AMPS A	VOLT AMPS B	BREAKER POLE	BREAKER AMP	DESCRIPTION
LIGHTS	1	20	32		1		2	32		1	20	LIGHTS
FAN EF-C-1	1	20		528	3		4		528	1	20	FAN EF-C-2
RECEPTACLES	1	20	360		5		6	360		1	20	RECEPTACLES
GAS DETECTION	1	20		500	7		8		500	1	20	GAS DETECTION
SPARE	2	20	1000		9		10	160		1	20	EXTERIOR LIGHTING
				1000	11		12		1000	2		SPARE
GAS FEED CONTROLLER	1	20	300		13		14	1000			20	
HORN/STROBE CONTROL PANEL	1	20		500	15		16		4750	2		WH-2
OUTDOOR RECEPTACLES	1	20	360		17		18	4750			60	
LEVEL TRANSMITTER CCB	1	20		500	19		20		500	1	20	HORN/STROBE CONTROL PANEL
HEAT TRACE @ RAS PUMP STATION	1	20	500		21		22	1000		1	20	SPARE
SPARE	1	20		1000	23		24		1000	1	20	SPARE
SPARE	1	20	1000		25		26	1000		1	20	SPARE
SPACE					27		28					SPACE
SPACE					29		30					SPACE
SPACE					31		32					SPACE
SPACE					33		34					SPACE
SPACE					35		36					SPACE
SPACE					37		38					SPACE
SPACE					39		40			2		SPD
SPACE					41		42				40	

CONNECTED BUS A 11,854 VA | CONNECTED BUS B 12,306 VA
3552 | 4028 — TOTAL: 24160 VA — 8302 | 8278
DEMAND KVA: 24.4 | DEMAND AMPS: 101.8
NOTE: * INDICATES GFI BREAKER

This Record Drawing is a combination of the design engineer's original drawings for this project, modified by information furnished by the contractor reflecting changes in the project construction. The contractor and professional sealed drawings are on file at the offices of
FREESE AND NICHOLS, INC.
RECORD DRAWINGS PREPARED ON:
06/24/20

THE SEAL AND ORIGINALLY APPEARED ON THIS DOCUMENT WAS AUTHORIZED BY JOHN W. MANNING, P.E. ON 06/24/2020. IT IS NOT TO BE USED AS A SEALED DOCUMENT WITHOUT PROPER ALTERATION OF THE SEAL AND SIGNATURE. ANY UNAUTHORIZED ALTERATION OF A SEALED DOCUMENT IS A VIOLATION AND OFFENSE UNDER THE TEXAS ENGINEERING PRACTICE ACT.

Freese and Nichols, Inc.
Texas Registered Engineering Firm F-2144

FREESE NICHOLS
4040 Broadway Street, Suite 600
San Antonio, Texas 78209-6350
Phone (210) 298-3800
Fax (210) 298-3801
Web – www.freese.com

CITY OF CASTROVILLE
WWTP CAPACITY EXPANSION PROJECT
ELECTRICAL
PANELBOARD SCHEDULES II

NO.	ISSUE	BY	DATE
0	RECORD DRAWING	JWM	06/24/20
1	PCM NO. 9	JWM	7/13/17
2	ADDENDUM NO. 4	JWM	7/26/16

VERIFY SCALE Bar is one inch on original drawing. If not one inch on this sheet, adjust scale.
0 1"

F&N JOB NO. CVL14259 | DATE 6/10/16 | DESIGNED JWM | DRAWN JWM | CHECKED TWZ | FILE NAME EL-ALL-SCH-PNL2.dwg

SHEET E-27
SEQ.

ACAD Rel: 23.0s (LMS Tech)
Filename: N:\ELEC\EL-ALL-SCH-PNL2.dwg
Last Saved: 6/22/2020 4:17 PM Saved By: 03823

Plot Date: 6/23/2020 9:57 AM Plot By: 03823 Filename: N:\ELEC\EL-ALL-SCH-PNL2.dwg

INTERCONNECTION DIAGRAM

LOOP	EQUIPMENT DESCRIPTION	FIELD DEVICE/FIELD WIRING			
X	CLARIFIER NO. 1 HIGH TORQUE	CTS1	TS1-01C 2 #14, #14G., ¾"C.	CLARIFIER NO. 1 MOTOR STARTER	CLAR1-01C 4 #14, #14G., 1"C.
	CLARIFIER NO. 1 TORQUE WARNING	CTS2	TS2-01C 2 #14, #14G., ¾"C.		
	BACKWASH VALVE 1	BWV1	BWV1-01C 8 #14, #14G., 2"C.	FILTER CONTROL PANEL	FCP-01C 10 #14, #14G., 2 ½"C.
X	BACKWASH VALVE 2	BWV2	BWV2-01C 8 #14, #14G., 2"C.		
	BACKWASH VALVE 3	BWV3	BWV3-01C 8 #14, #14G., 2"C.		
	BACKWASH VALVE 4	BWV4	BWV4-01C 8 #14, #14G., 2"C.		
	SOLID WASTE VALVE 1	SWV1	SWV1-01C 8 #14, #14G., 2"C.		
	FILTER BASIN HIGH LEVEL FLOAT SWITCH	FBFS1	FBFS-01C 2 #14, #14G., ¾"C.		
	BACKWASH VACUUM TRANSMITTER	BVT1	BVT1-01C 1PR. #18 SHLD., ¾"C.		
	FILTER BASIN PRESSURE TRANSMITTER	FBPT1	FBPT1-01C 1PR. #18 SHLD., ¾"C.		
	FILTER BACKWASH WASTE FLOW METER		FIT-05C 1PR. #18 SHLD., ¾"C.		
X	FINE SCREEN LEVEL SWITCHES		LS-01C 4 #14, #14G., ¾"C.	HEADWORKS CONTROL PANEL	HDW-01C 10 #14, #14G., 1"C.
101	FINE SCREEN WASH SOLENOID VALVES	LSL LSH	4 #14, #14G., ¾"C.		
	BNR AREATOR 1A OVER TEMP, LOW OIL PRESSURE, DISCONNECT CONTACT	MOT-101	MOT101-01C 6 #14, #14G., ¾"C.	BNR MAIN CONTROL PANEL	BNR-01C 10 #14, #14G., 2 ½"C.
102			2 MSH101-02P 2 #12, #12G., ¾"C.		
	BNR AREATOR 1B OVER TEMP, LOW OIL PRESSURE, DISCONNECT CONTACT	MOT-102	MOT102-01C 6 #14, #14G., ¾"C.		
103			2 MSH102-02P 2 #12, #12G., ¾"C.		
104	BNR MIXER 1A OVER TEMP & LOW OIL PRESSURE	MOT-103	MOT103-01C 4 #14, #14G., ¾"C.		
105	BNR MIXER 1B OVER TEMP & LOW OIL PRESSURE	MOT-104	MOT104-01C 4 #14, #14G., ¾"C.		
	BNR DIVERTER GATE 1A	MOT-105	MOT105-01A 2PR. #18 SHLD., ¾"C.		
106			MOT105-01C 2 #14, #14G., ¾"C.		
	BNR ELIMINATOR GATE 1B	MOT-106	MOT106-01A 2PR. #18 SHLD., ¾"C.		
			MOT106-01C 2 #14, #14G., ¾"C.		

INTERCONNECTION DIAGRAM

LOOP	EQUIPMENT DESCRIPTION	FIELD DEVICE/FIELD WIRING				
107	BNR ORP PROBE 1A	AE-107	MANUFACTURER SUPPLIED CABLE, 1"C.	AIT-107	AIT107-01A 1PR. #18 SHLD., ¾"C.	BNR MAIN CONTROL PANEL
					AIT107-01C 2 #14, #14G., ¾"C.	
108	BNR D.O. PROBE 1A	AE-108	MANUFACTURER SUPPLIED CABLE, 1"C.	AIT-108	AIT108-01A 1PR. #18 SHLD., ¾"C.	
					AIT108-01C 2 #14, #14G., ¾"C.	
108	BNR D.O. PROBE 1B	AE-109	MANUFACTURER SUPPLIED CABLE, 1"C.	AIT-109	AIT109-01A 1PR. #18 SHLD., ¾"C.	
					AIT109-01C 2 #14, #14G., ¾"C.	
203	BNR MIXER 2A OVER TEMP & LOW OIL PRESSURE	MOT-203	MOT203-01C 4 #14, #14G., ¾"C.			
204	BNR MIXER2B OVER TEMP & LOW OIL PRESSURE	MOT-204	MOT204-01C 4 #14, #14G., ¾"C.			
205	BNR DIVERTER GATE 2A	MOT-205	MOT205-01A 2PR. #18 SHLD., ¾"C.			
			MOT205-01C 4 #14, #14G., ¾"C.			
206	BNR ELIMINATOR GATE 2B	MOT-206	MOT206-01A 2PR. #18 SHLD., ¾"C.			
			MOT206-01C 4 #14, #14G., ¾"C.			
207	BNR ORP PROBE 2A	AE-207	MANUFACTURER SUPPLIED CABLE, 1"C.	AIT-207	AIT207-01A 1PR. #18 SHLD., ¾"C.	
					AIT207-01C 2 #14, #14G., ¾"C.	
208	BNR D.O. PROBE 2A	AE-208	MANUFACTURER SUPPLIED CABLE, 1"C.	AIT-208	AIT208-01A 1PR. #18 SHLD., ¾"C.	
					AIT208-01C 2 #14, #14G., ¾"C.	
209	BNR D.O. PROBE 2B	AE-209	MANUFACTURER SUPPLIED CABLE, 1"C.	AIT-209	AIT209-01A 1PR. #18 SHLD., ¾"C.	
					AIT209-01C 2 #14, #14G., ¾"C.	
201	BNR AREATOR 1A OVER TEMP & LOW OIL PRESSURE	MOT-201	MOT201-01C 6 #14, #14G., ¾"C.			BRN SECOND CONTROL PANEL
			2 MSH201-02P 2 #12, #12G., ¾"C.			
202	BNR AREATOR 1B OVER TEMP & LOW OIL PRESSURE	MOT-202	MOT202-01C 6 #14, #14G., ¾"C.			
			2 MSH202-02P 2 #12, #12G., ¾"C.			
	GENERATOR		GEN-01C 10 #14, #14G., 1"C.	ATS	ATS-01C 10 #14, #14G., 1"C.	
			GEN-02C 2PR. #18 SHLD., ¾"C.			

RTU

BNR-02C
30 #14, #14G., 2"C.
2

This Record Drawing is a combination of the sealed engineering construction plans for this project, modified by information furnished by the contractor reflecting changes in the construction. Reproduction of these record plans or sealed drawings are on file at the offices of FREESE AND NICHOLS, INC.
RECORD DRAWINGS PREPARED ON: 06/24/20

Freese and Nichols, Inc.
Texas Registered Engineering Firm F-2144

THE SEAL (NOT ORIGINALLY AFFIXED ON THIS DOCUMENT WAS AUTHORIZED BY JOHN M.P. MANNING, P.E. ALTERATION OF A SEALED DOCUMENT WITHOUT PROPER AUTHORIZATION AND/OR ADDITIONAL SEAL MAY CONSTITUTE AN OFFENSE UNDER THE TEXAS ENGINEERING PRACTICE ACT.

FREESE NICHOLS
4040 Broadway Street, Suite 600
San Antonio, Texas 78209-6350
Phone (210) 298-3800
Fax (210) 298-3801
Web - www.freese.com

CITY OF CASTROVILLE

WWTP CAPACITY EXPANSION PROJECT

ELECTRICAL

INTERCONNECTION DIAGRAM I

NO.	ISSUE	BY	DATE
	RECORD DRAWING	JWM	06/24/20
2	PCM#5	JWM	4/14/17
1	ISSUED FOR CONSTRUCTION	JWM	11/18/16

VERIFY SCALE Bar is one inch on original drawing. If not one inch on this sheet, adjust scale.
0 1"

F&N JOB NO. CVL14259
DATE 6/10/16
DESIGNED JWM
DRAWN JWM
CHECKED TWZ
FILE NAME EL-ALL-OA-INTC.dwg

SHEET E-28
SEQ.

ACAD Rel: 23.0s (LMS Tech)
Filename: N:\ELEC\EL-ALL-OA-INTC.dwg
Last Saved: 6/22/2020 4:17 PM Saved By: 03823

Plot Date: 6/23/2020 9:57 AM Plot By: 03823 Filename: N:\ELEC\EL-ALL-OA-INTC.dwg

INTERCONNECTION DIAGRAM

LOOP	EQUIPMENT DESCRIPTION	FIELD DEVICE/FIELD WIRING
	SLUDGE PUMP PRESSURE SWITCH NO.1	P1-01C, 2 #14, #14G., ¾"C. → SLUDGE PUMP CONTROL PANEL → SPS-01C, 12 #14, #14G., 1"C.
	SLUDGE PUMP PRESSURE SWITCH NO. 2	P2-01C, 2 #14, #14G., ¾"C. → SPS-01A, 4 PR. #18 SHLD., 2"C.
	SCREW PRESS SOLENOIDS	WS-01C, 12 #14, #14G., ¾"C. → SCREW PRESS CONTROL PANEL
		PCP-01A, 2PR. #18 SHLD., ¾"C.
	POLYMER FEED	POLYMER FEED CONTROL PANEL → PCP-01C, 10 #14, #14G., 1"C.
		WAS-01C, 10 #14, #14G., 1"C. → BNR MAIN CONTROL PANEL
	WAS CONTROL VALVE	WAS-01C, 10 #14, #14G., 1"C.
		2
	LOW LEVEL SWITCH IN CHLORINE CONTACT BASIN	LSL-02C, 4 #14, #14G., ¾"C.
	NON-POTABLE WATER SYSTEM	NPWS-01C, 10 #14, #14G., 1"C.
	NON-POTABLE WATER SYSTEM FLOW METER	NPWS-01A, 2PR. #18 SHLD., ¾"C.
	HEADWORKS INFLUENT REGIONAL LIFT STATION FLOW	FIT100C-01A, 1PR. #18 SHLD., ¾"C.
	HEADWORKS INFLUENT EASTSIDE LIFT STATION FLOW	FIT100B-01A, 1PR. #18 SHLD., ¾"C.
	HEADWORKS INFLUENT PLANT DRAIN LIFT STATION FLOW METER	FIT100A-01A, 1PR. #18 SHLD., ¾"C.
	PLANT EFFLUENT FLOW	EFF-01A, 1PR. #18 SHLD., ¾"C.
	CHEMICAL BUILDING LEAK DETECTION	LEK-03C, 10 #14, #14G., 1"C. → CHEMICAL LEAK ALARM PANEL → LEK-01C, 10 #14, #14G., 1"C.
	CHEMICAL BUILDING LEAK DETECTION	LEK-04C, 10 #14, #14G., 1"C. → CHEMICAL LEAK ALARM PANEL → LEK-02C, 10 #14, #14G., 1"C.
	CHLORINATOR NO. 1	CMF-01C, 2PR. #18 SHLD., 1"C.
	CHLORINATOR NO. 2	CMF-02C, 2PR. #18 SHLD., 1"C.
		RTU

INTERCONNECTION DIAGRAM

LOOP	EQUIPMENT DESCRIPTION	FIELD DEVICE/FIELD WIRING
	RAS PUMP NO. 1 CONTROL STATION	RAS1-01C, 6 #14, #14G., ¾"C.
	RAS PUMP NO. 2 CONTROL STATION	RAS2-01C, 6 #14, #14G., ¾"C.
		2
		RAS-01C, 12 #14, #14G., 1"C. → BNR MAIN CONTROL PANEL
	PLANT DRAIN PUMP MONITOR PUMP NO. 1	PDP1-01C, 4 #14, #14G., ¾"C. → PLANT DRAIN P.S. CONTROL PANEL → PDP-01C, 14 #14, #14G., ¾"C. → MCC
	PLANT DRAIN LOW LEVEL FLOAT	LSL, LSL-01C, 2 #14, #14G., ¾"C. → PLANT DRAIN P.S. CONTROL PANEL
	PLANT DRAIN HIGH LEVEL FLOAT	LSH, LSH-01C, 2 #14, #14G., ¾"C. → PLANT DRAIN P.S. CONTROL PANEL
	PLANT DRAIN HIGH HIGH LEVEL FLOAT	LSHH, LSHH-01C, 4 #14, #14G., ¾"C. → PLANT DRAIN P.S. CONTROL PANEL
	PLANT DRAIN PUMP MONITOR PUMP NO. 2	PDP2-01C, 4 #14, #14G., ¾"C. → PLANT DRAIN P.S. CONTROL PANEL
		2
	OFFSITE LIFT STATION	OSLS-01C, 12 #14, #14G., 2"C. → RLS-01C, 20 #14, #14G., 2"C.
	EXISTING RAS/WAS PUMP STATION	RAS1-01C, 12 #14, #14G., 2"C. → MCC
	BNR SPLITTER BOX HIGH LEVEL ALARM	LSH-100C, 10 #14, #14G., 1"C.
	ALUM PUMP NO. 1	ALUM-01C, 10 #14, #14G., 1"C.
		ALUM-01A, 2PR. #18 SHLD., 1"C.
	ALUM PUMP NO. 2	ALUM-02C, 10 #14, #14G., 1"C.
		ALUM-02A, 2PR. #18 SHLD., 1"C.
		RTU

This Record Drawing is a combination of the sealed engineering construction plans for this project, modified by information furnished by the contractor reflecting changes in the project made during construction. These original sealed drawings are on file at the offices of FREESE AND NICHOLS, INC.
RECORD DRAWINGS PREPARED ON: 06/24/20

Freese and Nichols, Inc.
Texas Registered Engineering Firm F-2144

THE SEAL (NF ORIGINALLY APPEARED ON THIS DOCUMENT WAS AUTHORIZED BY JOHN W.P. MANNING, P.E.
PURSUANT TO SECTION 1001.109 (a) (3) OF THE TEXAS ALTERATION OF A SEALED DOCUMENT WITHOUT PROPER AUTHORIZATION OR ADDITION TO A SEALED DOCUMENT WITHOUT PROPER AUTHORIZATION MAY CONSTITUTE AN OFFENSE UNDER THE TEXAS ENGINEERING PRACTICE ACT

FREESE NICHOLS
4040 Broadway Street, Suite 600
San Antonio, Texas 78209-6350
Phone (210) 298-3800
Fax (210) 298-3825
Web - www.freese.com

CITY OF CASTROVILLE
WWTP CAPACITY EXPANSION PROJECT
ELECTRICAL
INTERCONNECTION DIAGRAM II

FAN JOB NO. CVL14259
DATE 6/10/16
DESIGNED JWM
DRAWN JWM
CHECKED TWZ

NO.	ISSUE	BY	DATE
2	RECORD DRAWING	JWM	06/24/20
1	PCM#5	JWM	4/14/17
0	ISSUED FOR CONSTRUCTION	JWM	11/18/16

FILE NAME EL-ALL-OA-INTERII.dwg

VERIFY SCALE Bar is one inch on original drawing. If not one inch on this sheet, adjust scale.
0 1"

SHEET E-29
SEQ.

ACAD Rel: 23.0s (LMS Tech)
Filename: N:\ELEC\EL-ALL-OA-INTERII.dwg
Last Saved: 6/22/2020 4:18 PM Saved By: 03823

Plot Date: 6/23/2020 9:57 AM Plot By: 03823 Filename: N:\ELEC\EL-ALL-OA-INTERII.dwg

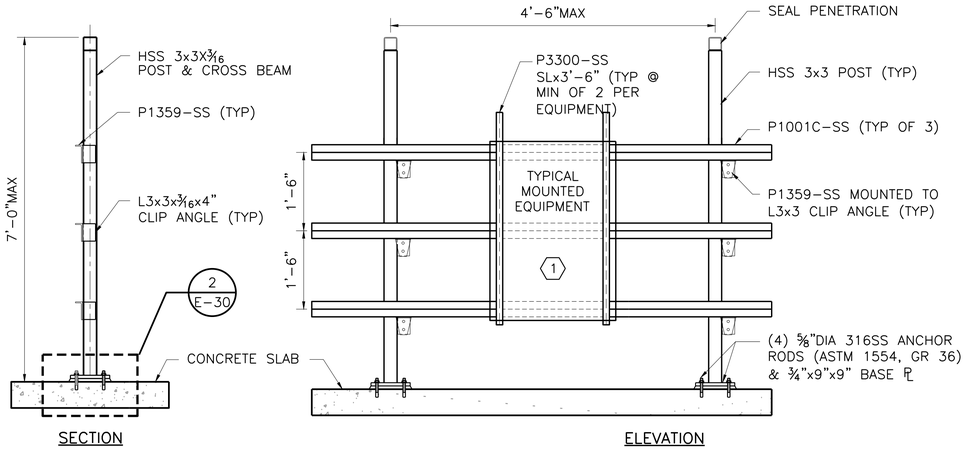

NO.1 GENERAL NOTES:

1. ALL MEMBERS SHOWN AND REQUIRED CONNECTING HARDWARE SHALL BE STAINLESS STEEL.
2. MEMBERS ARE INDICATED BY UNISTRUT PART NUMBERS. PROVIDE ALL MEMBERS AND CONNECTING HARDWARE BY UNISTRUT OR APPROVED EQUAL.
3. SLOPE SLAB-ON-GRADE TO DRAIN.
4. RACKS SHALL BE GROUNDED PER THE NATIONAL ELECTRICAL CODE. PROVIDE AS A MINIMUM ONE 3/4"x10'-0" COPPER CLAD GROUND ROD ON EACH SIDE OF THE ELECTRICAL EQUIPMENT RACK.
5. ALL NUTS, BOLTS, WASHERS, OTHER FASTENERS AND HARDWARE ON ELECTRICAL EQUIPMENT RACK SHALL BE STAINLESS STEEL.
6. WELD CROSS BEAM TO POST WITH 3/16" FILLET AND PARTIAL PENETRATION GROVE WELDS, 4/32" EFFECTIVE THROAT.

NO.1 NOTES BY SYMBOL "⬡"

1. MOUNT EQUIPMENT AS REQUIRED PER SITE.

1 — ELECTRICAL EQUIPMENT RACK DETAIL

NOT TO SCALE

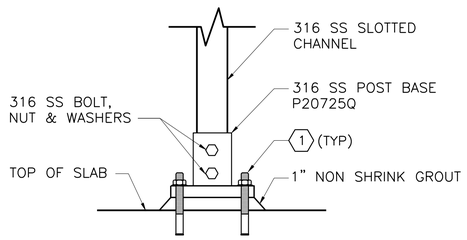

NO.2 NOTES BY SYMBOL "⬡"

1. 3/4"DIA 316 STAINLESS STEEL EXPOXY ANCHOR (TYP OF 4).

2 — FREE STANDING SUPPORT DETAIL

NOT TO SCALE

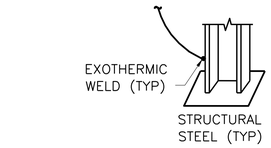

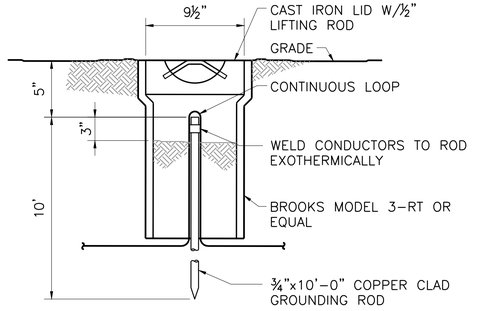

4 — GROUND ROD TEST WELL DETAIL

NOT TO SCALE

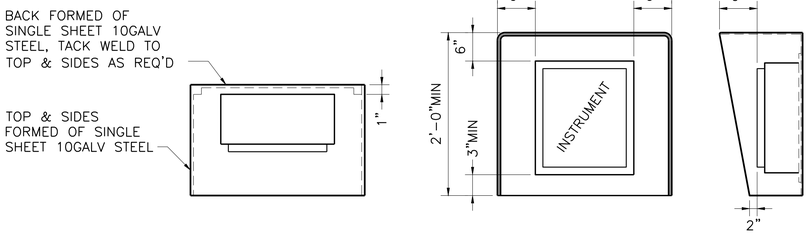

NO.3 GENERAL NOTES:

1. ALL EXPOSED EDGES TO BE GROUND SMOOTH AND BURR FREE.
2. MOUNT HOOD BETWEEN INSTRUMENT AND MOUNTING BRACKET. DRILL HOLES IN HOOD AS PER MOUNTING HOLES FOR INSTRUMENTS.
3. MOUNT INSTRUMENT WITH 1" AIR SPACE BETWEEN BACK OF INSTRUMENT AND SUNSHADE.

3 — INSTRUMENT SUNSHADE DETAIL

NOT TO SCALE

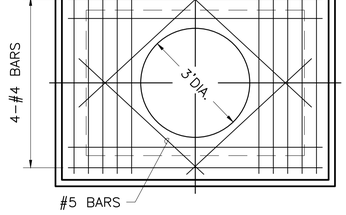

TOP SLAB DETAIL

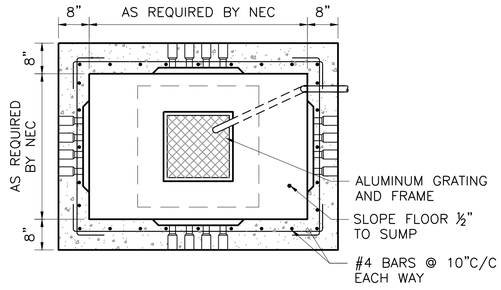

BOTTOM PLAN

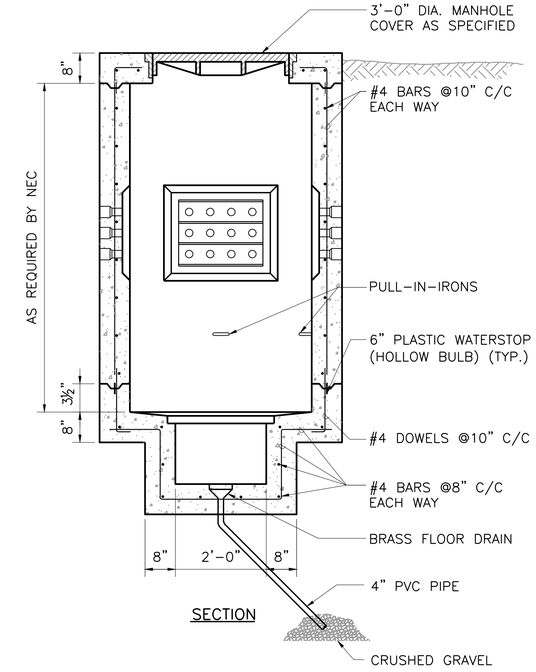

SECTION

5 — MANHOLE WITH DRAIN DETAIL

NOT TO SCALE

This Record Drawing is a combination of the sealed engineering construction plans for this project, modified by information furnished by the contractor reflecting changes in the field made during construction. The original sealed drawings are on file at the offices of FREESE AND NICHOLS, INC.
RECORD DRAWINGS PREPARED ON: 06/24/20

Freese and Nichols, Inc.
Texas Registered Engineering Firm F-2144

THE SEAL APPEARING ON THIS DOCUMENT WAS AUTHORIZED BY JOHN W.P. MANNING, P.E. ON 6/24/2020. IT IS A VIOLATION OF THE LAW FOR ANY PERSON, UNLESS ACTING AT THE DIRECTION OF A LICENSED ENGINEER, TO ALTER THIS DOCUMENT WITHOUT PROPER NOTATION OF SUCH ALTERATION. ANY ALTERATION IS AN OFFENSE UNDER THE TEXAS ENGINEERING PRACTICE ACT.

FREESE NICHOLS
4040 Broadway Street, Suite 600
San Antonio, Texas 78209-6350
Phone (210) 298-3800
Fax (210) 298-3838
Web - www.freese.com

CITY OF CASTROVILLE
WWTP CAPACITY EXPANSION PROJECT
ELECTRICAL
DETAILS I

NO.	ISSUE	BY	DATE
	RECORD DRAWING	JWM	06/24/20
	ISSUED FOR CONSTRUCTION	JWM	11/18/16

VERIFY SCALE Bar is one inch on original drawing. If not one inch on this sheet, adjust scale.
0 1"

F&N JOB NO.	CVL14259
DATE	6/10/16
DESIGNED	JWM
DRAWN	JWM
CHECKED	TWZ
FILE NAME	EL-OA-DTL-DTLSI.dwg

SHEET E-30
SEQ.

ACAD Rel: 23.0s (LMS Tech)
Filename: N:\ELEC\EL-OA-DTL-DTLSI.dwg
Last Saved: 6/22/2020 4:19 PM Saved By: 03823

Plot Date: 6/23/2020 9:57 AM Plot By: 03823 Filename: N:\ELEC\EL-OA-DTL-DTLSI.dwg

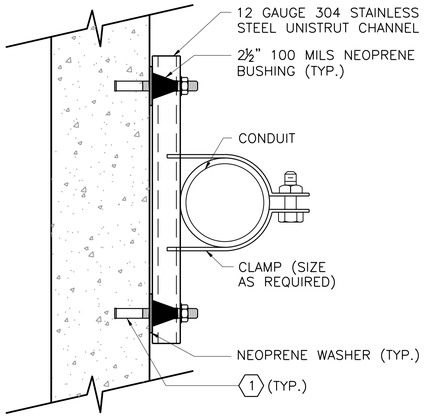

DETAIL NO.1 NOTES BY SYMBOL "⬡"

1. ANCHORS SHALL BE ½"ø ADHESIVE CAPSULE.

1 CEILING OR WALL EXPOSED CONDUIT INSTALLATION

NOT TO SCALE

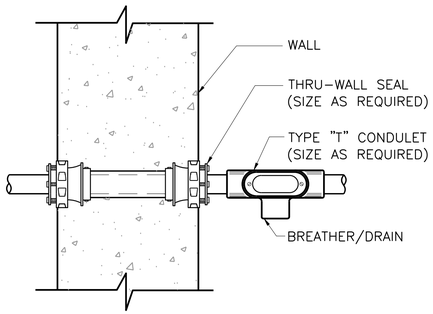

2 CONDUIT DRAIN

NOT TO SCALE

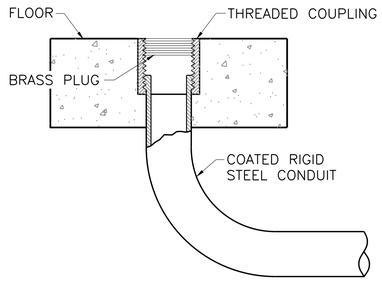

3 CONDUIT STUB-UP

NOT TO SCALE

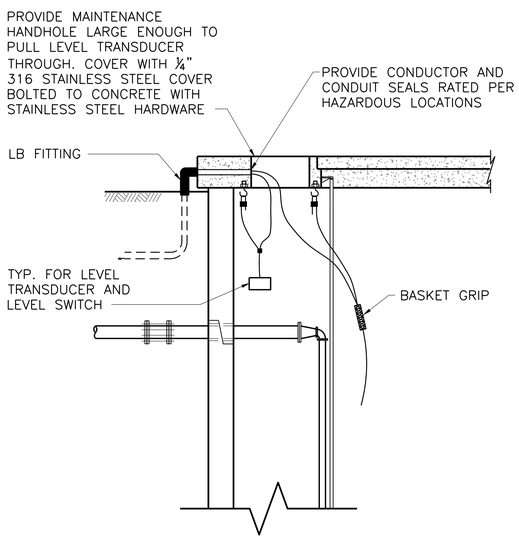

4 EQUIPMENT SUPPORT DETAIL

NOT TO SCALE

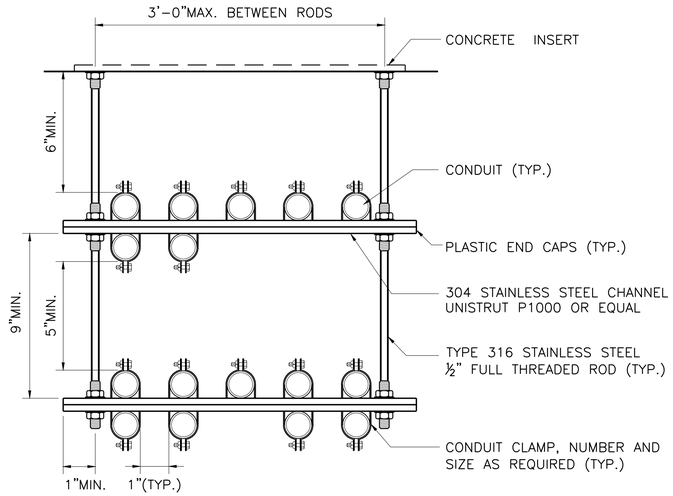

5 CEILING MOUNTED CONDUIT RACK

NOT TO SCALE

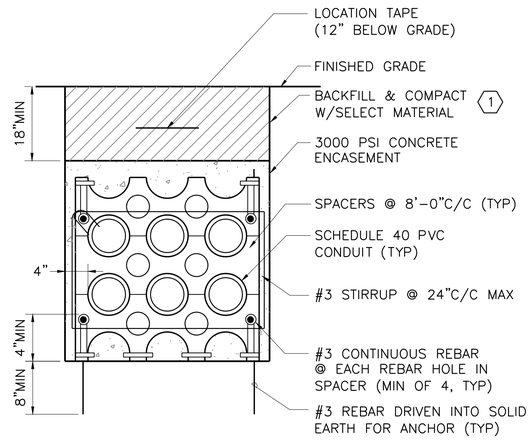

NO.6 NOTES BY SYMBOL "⬡"

1. SELECT BACKFILL TO BE CLASS 4 EARTH FILL. FILL SHALL CONSIST OF MATERIALS WHICH ARE CLASSIFIED AS SP, SM, SC, CL OR DUAL CLASSIFICATIONS THEREOF, WHICH HAVE A LIQUID LIMIT LESS THAN OR EQUAL TO 35 AND A PLASTICITY INDEX OF A MINIMUM OF 4 AND A MAXIMUM OF 15, WHICH ARE FREE OF ORGANIC MATERIALS.

6 CONCRETE ENCASED DUCT BANK DETAIL

NOT TO SCALE

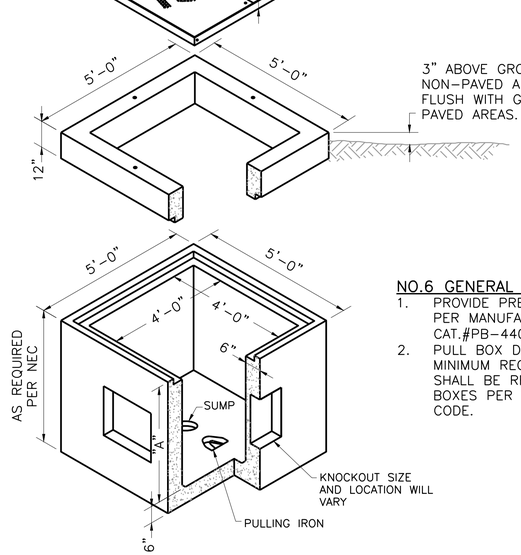

NO.6 GENERAL NOTES:

1. PROVIDE PRECAST CONCRETE PULL BOX PER MANUFACTURER OLDCASTLE PRECAST CAT.#PB-440 OR APPROVED EQUAL.
2. PULL BOX DIMENSIONS INDICATED ARE MINIMUM REQUIRED. THE CONTRACTOR SHALL BE RESPONSIBLE FOR SIZING PULL BOXES PER THE NATIONAL ELECTRIC CODE.

7 PULL BOX DETAIL

NOT TO SCALE

This Record Drawing is a combination of the sealed engineering construction plans for this project, modified by information furnished by the contractor reflecting changes in the project construction. Reproduction of this record drawing is not a substitute for the original sealed drawings are on file at the offices of FREESE AND NICHOLS, INC.
RECORD DRAWINGS PREPARED ON: 06/24/20

Freese and Nichols, Inc.
Texas Registered Engineering Firm F-2144

THE SEAL HAS ORIGINALLY APPEARED ON THIS DOCUMENT WAS AUTHORIZED BY JOHN W.P. MANNING, P.E.
PRINTED NAME OF PERSON SEALING DOCUMENT
ALTERATION OF A SEALED DOCUMENT WITHOUT PROPER AUTHORIZATION AND ADDITIONAL SEAL MAY BE A VIOLATION OF SECTION 1001 OF TITLE 18 OF THE U.S. CODE AND OFFENSE UNDER THE TEXAS ENGINEERING PRACTICE ACT.

FREESE NICHOLS
4040 Broadway Street, Suite 600
San Antonio, Texas 78209-6350
Phone (210) 298-3800
Fax (210) 298-3801
Web - www.freese.com

CITY OF CASTROVILLE

WWTP CAPACITY EXPANSION PROJECT

ELECTRICAL

DETAILS II

NO.	ISSUE	BY	DATE
2	RECORD DRAWING	JWM	06/24/20
1	ISSUED FOR CONSTRUCTION	JWM	11/18/16
1	CA No.1	JWM	10/25/16

VERIFY SCALE Bar is one inch on original drawing. If not one inch on this sheet, adjust scale.

F&N JOB NO.	CVL14259
DATE	6/10/16
DESIGNED	JWM
DRAWN	JWM
REVISED	
CHECKED	TWZ
FILE NAME	EL-ALL-DT-DTLSI.dwg

SHEET E-31

SEQ.

ACAD Rel: 23.0s (LMS Tech)
Filename: N:\ELEC\EL-ALL-DT-DTLSI.dwg
Last Saved: 6/22/2020 4:19 PM Saved By: 03823

Plot Date: 6/23/2020 9:58 AM Plot By: 03823 Filename: N:\ELEC\EL-ALL-DT-DTLSI.dwg



1	GEN-01P	4"C.
2	GEN-01P	4"C.
3	LA-21,23	4"C.
4	LA-25	4"C.

1 — DUCT BANK DETAIL
NOT TO SCALE

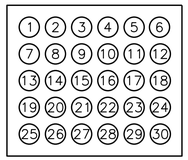

1	MOT101-01P	2"C.
2	MOT102-01P	2"C.
3	MOT203-01P	2"C.
4	MOT204-01P	2"C.
5	MOT105-01P	2"C.
6	MOT106-01P	2"C.
7	MOT205-01P	2"C.
8	MOT206-01P	2"C.
9	MOT103-01P	2"C.
10	MOT104-01P	2"C.
11	MOT201-01P	2"C.
12	MOT202-01P	2"C.
13	FCP-01P	2"C.
14	LA-7 LA-30	2"C.
15	LA-9 LA-11	2"C.
16	CLAR1-01P	2"C.
17	LA-1 LA-32	2"C.
18	LA-13 LA-15	2"C.
19	LA-34 LA-36	2"C.
20	LA-17 LA-19	2"C.
21	MSH101-01P MSH102-01P	2"C.
22	AE108-01P AE109-01P	2"C.
23	MSH201-01P MSH202-01P	2"C.
24	AE208-01P AE209-01P	2"C.
25	RAS1-01P	2"C.
26	RAS2-01P	2"C.
27	SPARE	2"C.
28	SPARE	2"C.
29	SPARE	2"C.
30	SPARE	2"C.

2 — DUCT BANK DETAIL
NOT TO SCALE

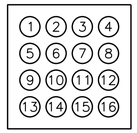

1	MOT101-01P	2"C.
2	MOT102-01P	2"C.
3	MOT105-01P	2"C.
4	MOT106-01P	2"C.
5	MOT103-01P	2"C.
6	MOT104-01P	2"C.
7	LA-13	2"C.
8	LA-17	2"C.
9	AE108-01P AE109-01P	2"C.
10	LA-30	2"C.
11	LA-32	2"C.
12	MSH101-01P	2"C.
13	MSH102-01P	2"C.
14	SPARE	2"C.
15	SPARE	2"C.
16	SPARE	2"C

3 — DUCT BANK DETAIL
NOT TO SCALE

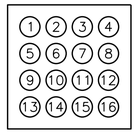

1	MOT203-01P	2"C.
2	MOT204-01P	2"C.
3	MOT205-01P	2"C.
4	MOT206-01P	2"C.
5	MOT201-01P	2"C.
6	MOT202-01P	2"C.
7	LA-15	2"C.
8	LA-19	2"C.
9	AE208-01P AE209-01P	2"C.
10	SPARE	2"C
11	LA-34	2"C.
12	LA-36	2"C.
13	MSH201-01P	2"C.
14	MSH202-01P	2"C.
15	SPARE	2"C.
16	SPARE	2"C.

4 — DUCT BANK DETAIL
NOT TO SCALE



1	FCP-01P	2"C.
2	LA-7, LA-39	2"C.
3	LA-9, LA-11	2"C.
4	CLAR1-01P	2"C.
5	LA-1	2'C.
6	RAS1-01P	2"C.
7	RAS2-01P	2"C.
8	SPARE	2"C.
9	SPARE	2"C.

5 — DUCT BANK DETAIL
NOT TO SCALE

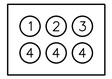

1	RAS1-01P	2"C.
2	LA-1	2"C.
3	RAS2-01P	2"C.
4	MSH1-01P	2"C.
5	MSH2-01P	2"C.
6	CLAR1-01P	2"C.

6 — DUCT BANK DETAIL
NOT TO SCALE



1	FCP-01P	2"C.
3	LA-7, LA-39	2"C.
3	LA-9, LA-11	2"C.
4	SPARE	2"C.

7 — DUCT BANK DETAIL
NOT TO SCALE



1	CLAR2-01P	2"C.
2	CHEM-01P	2"C.
3	RAS1-01P	2"C.
4	OSLS-01P	2"C.

8 — DUCT BANK DETAIL
NOT TO SCALE



1	CHEM-01P	2"C.
2	SPARE	2"C.

9 — DUCT BANK DETAIL
NOT TO SCALE



1	CLAR2-01P	2"C.
2	SPARE	2"C.

10 — DUCT BANK DETAIL
NOT TO SCALE

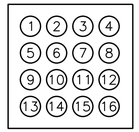

1	HDW-01P	2"C.
2	SPCP-01P	2"C.
3	WPS-01P	2"C.
4	LA-3 LA-42	2"C.
5	LA-44 LA-46	2"C.
6	HTRB-01P	2"C.
7	LA-37 LA-35	2"C.
8	LA-33 LA-31	2"C.
9	LA-29 LA-27	2"C.
10	WAS-01P	2"C.
11	LA-48	2"C.
12	PD1-01P	2"C.
13	PD2-01P	2"C.
14	LA-52 LA-54	2"C.
15	SPARE	2"C.
16	SPARE	2"C.

11 — DUCT BANK DETAIL
NOT TO SCALE

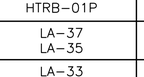

1	SPCP-01P	2"C.
2	LA-46	2"C.
3	LA-42 LA-44	2"C.

12 — DUCT BANK DETAIL
NOT TO SCALE

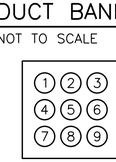

1	HDW-01P	2"C.
2	WPS-01P	2"C.
3	LA-48	2"C.
4	LA-37 LA-35	2"C.
5	LA-29 LA-27	2"C.
6	LA-33 LA-31	2"C.
7	HTRB-01P	2"C.
8	PD1-01P	2"C.
9	PD2-01P	2"C.
10	LA-52 LA-54	2"C.
11	SPARE	2"C
12	SPARE	2"C

13 — DUCT BANK DETAIL
NOT TO SCALE

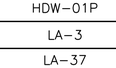

1	WPS-01P	2"C.
2	SPARE	2"C.

14 — DUCT BANK DETAIL
NOT TO SCALE

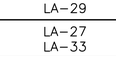

1	HDW-01P	2"C.
2	LA-3	2"C.
3	LA-37 LA-29	2"C.
4	LA-27 LA-33	2"C.
5	LA-31 LA-35	2"C
6	HTBR-01P	2"C
7	LA-52 LA-54	2"C
8	SPARE	2"C
9	SPARE	2"C

15 — DUCT BANK DETAIL
NOT TO SCALE

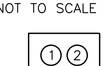

1	PD1-01P	2"C.
2	PD2-01P	2"C.
3	LA-48	2"C.
4	SPARE	2"C.

16 — DUCT BANK DETAIL
NOT TO SCALE

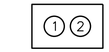

1	THKN-01P	2"C.
2	SPARE	2"C.

17 — DUCT BANK DETAIL
NOT TO SCALE



1	RAS1-01P	2"C.
2	SPARE	2"C.

18 — DUCT BANK DETAIL
NOT TO SCALE



1	OSLS-01P	2½"C.

19 — DUCT BANK DETAIL
NOT TO SCALE



1	NPWS-01P	2"C.
2	SPARE	2"C.

20 — DUCT BANK DETAIL
NOT TO SCALE



1	RAS1-01P	2"C.
2	CHEM-01P	2"C.
3	SPARE	2"C.

21 — DUCT BANK DETAIL
NOT TO SCALE



1	SPARE	2"C.
2	SPARE	2"C.
3	RAS1-01P	2"C.
4	RAS2-01P	2"C.
5	SPARE	2"C.
6	SPARE	2"C.

22 — DUCT BANK DETAIL
NOT TO SCALE

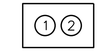

1	LAC-19	2"C.
2	SPARE	2"C.

23 — DUCT BANK DETAIL
NOT TO SCALE



1	LAC-21	2"C.
2	SPARE	2"C.

24 — DUCT BANK DETAIL
NOT TO SCALE



1	UTIL-01P	4"C.
2	UTIL-01P	4"C.
3	UTIL-01P	4"C.
4	SPARE	4"C.

25 — DUCT BANK DETAIL
NOT TO SCALE



1	FAA1-01P	4"C.
2	FAA2-01P	4"C.
3	FAA3-01P	4"C.
4	SPARE	4"C.

26 — DUCT BANK DETAIL
NOT TO SCALE

GENERAL NOTES:

1. UNDERGROUND CONDUIT SIZES MAY CHANGE TO A MINIMUM OF 1". CONTRACTOR SHALL BE RESPONSIBLE TO SIZE CONDUITS PER NATIONAL ELECTRICAL CODE.

This Record Drawing is a combination of the sealed engineering documents prepared for this project, modified by information furnished by the contractor reflecting changes in the project construction. Reproduction of these original sealed drawings are on file at the offices of FREESE AND NICHOLS, INC.
RECORD DRAWINGS PREPARED ON: 06/24/20

Freese and Nichols, Inc.
Texas Registered Engineering Firm F-2144

THE SEAL HAS ORIGINALLY APPEARED ON THIS DOCUMENT WAS AUTHORIZED BY JOHN W.P. MANNING, P.E. ON 6/24/20. IT IS A VIOLATION OF LAW FOR ANY PERSON, UNLESS ACTING AT THE DIRECTION OF A LICENSED ENGINEER, TO ALTER THIS DOCUMENT WITHOUT PROPER NOTATION OF THE ALTERATION BY THE ENGINEER. IT IS ALSO A VIOLATION OF LAW TO REPRODUCE A SEALED DOCUMENT WITHOUT AUTHORIZATION FROM THE ENGINEER. ANY VIOLATION IS SUBJECT TO PROSECUTION AND PENALTY OF LAW. TBPE FIRM REGISTRATION NO. F-2144

FREESE and NICHOLS
4040 Broadway Street, Suite 600
San Antonio, Texas 78209-6350
Phone (210) 298-3800
Fax (210) 298-3825
Web - www.freese.com

CITY OF CASTROVILLE

WWTP CAPACITY EXPANSION PROJECT

ELECTRICAL

DUCT BANK DETAILS I

NO.	ISSUE	BY	DATE
3	RECORD DRAWING	JWM	06/24/20
2	PCM#5	JWM	4/14/17
1	ISSUED FOR CONSTRUCTION	JWM	11/18/16
1	CA No.1	JWM	10/25/16

VERIFY SCALE Bar is one inch on original drawing. If not one inch on this sheet, adjust scale.
0 1"

F&N JOB NO. CVL14259 | DATE 6/10/16 | DESIGNED JWM | DRAWN JWM | REVISED | CHECKED TWZ
FILE NAME EL-ALL-DT-DUCT.dwg

SHEET E-32
SEQ.

ACAD Rel: 23.0s (LMS Tech)
Filename: N:\ELEC\EL-ALL-DT-DUCT.dwg
Last Saved: 6/22/2020 4:20 PM Saved By: 03823

Plot Date: 6/23/2020 9:58 AM Plot By: 03823 Filename: N:\ELEC\EL-ALL-DT-DUCT.dwg

1	GEN–01C	2"C.
2	GEN–02C	2"C.

1 – DUCT BANK DETAIL
NOT TO SCALE

1	MOT101–01C MOT102–01C MOT103–01C MOT104–01C MOT105–01C MOT106–01C	4"C.
2	MOT105–01A MOT106–01A	2"C.
3	AIT107–01A AIT108–01A AIT109–01A	2"C.
4	AIT107–01C AIT108–01C AIT109–01C	2"C.
5	LSH–100C	2"C.
6	SPARE	2"C.
7	SPARE	2"C.
8	SPARE	2"C.

3 – DUCT BANK DETAIL
NOT TO SCALE

1	MOT101–01C MOT102–01C MOT103–01C MOT104–01C MOT105–01C MOT106–01C	4"C.
2	MOT105–01A MOT106–01A	2"C.
3	AIT107–01A AIT108–01A AIT109–01A	2"C.
4	MOT201–01C MOT202–01C MOT203–01C MOT204–01C MOT205–01C MOT206–01C	4"C.
5	MOT205–01A MOT206–01A	2"C.
6	AIT207–01A AIT208–01A AIT209–01A	2"C.
7	FCP–01C	2"C.
8	CLAR1–01C	2"C.
9	HDW–01C	2"C.
10	PDP1–01C	2"C.
11	PDP2–01C	2"C.
12	LSL–01C, LSH–01C, LSHH–01C	2"C.
13	FIT–100A–01C FIT–100B–01C FIT–100C–01C	2"C.
14	AIT107–01C AIT108–01C AIT109–01C	2"C.
15	AIT207–01C AIT208–01C AIT209–01C	2"C.
16	ALUM–01C ALUM–02C	2"C.
17	ALUM–01A ALUM–02A	2"C.
18	SPARE	2"C.

2 – DUCT BANK DETAIL
NOT TO SCALE

1	MOT101–01C MOT102–01C MOT103–01C MOT104–01C MOT105–01C MOT106–01C	4"C.
2	MOT105–01A MOT106–01A	2"C.
3	AIT207–01A AIT208–01A AIT209–01A	2"C.
4	AIT207–01C AIT208–01C AIT209–01C	2"C.
5	SPARE	2"C.
6	SPARE	2"C.
7	SPARE	2"C.
8	SPARE	2"C.

4 – DUCT BANK DETAIL
NOT TO SCALE

1	FCP–01C	2"C.
2	CLAR1–01C	2"C.
3	RAS1–01C	2"C.
4	RAS2–01C	2"C

5 – DUCT BANK DETAIL
NOT TO SCALE

1	RAS1–01C	2"C.
2	RAS2–01C	2"C.
3	CLAR1–01C	2"C.

6 – DUCT BANK DETAIL
NOT TO SCALE

1	OSLS–01C	2"C.
2	SPARE	2"C.

7 – DUCT BANK DETAIL
NOT TO SCALE

1	RAS1–01C	2"C.
2	CMF–02C CMF–01C NPWS–01A EFF–01A	2"C.
3	LEK–02C LEK–01C NPWS–01C	2"C.
4	OSLS–01C	2"C

8 – DUCT BANK DETAIL
NOT TO SCALE

1	SPARE	2"C.
2	CMF–02C CMF–01C NPWS–01A EFF–01A	2"C.
3	LEK–02C LEK–01C NPWS–01C	2"C.
4	SPARE	2"C

9 – DUCT BANK DETAIL
NOT TO SCALE

1	RAS1–01C	2"C.
2	RAS2–01C	2"C.

10 – DUCT BANK DETAIL
NOT TO SCALE

1	LSL–02C	2"C.
2	SPARE	2"C.

11 – DUCT BANK DETAIL
NOT TO SCALE

1	SPS–01C	2"C.
2	SPS–01A	2"C.

12 – DUCT BANK DETAIL
NOT TO SCALE

1	WAS–01C	2"C.
2	WAS–01A	2"C.

3

13 – DUCT BANK DETAIL
NOT TO SCALE

1	HDW–01C	2"C.
2	PDP1–01C	2"C.
3	PDP2–01C	2"C.
4	LSL–01C, LSH–01C, LSHH–01C	2"C.
5	FIT–100A–01A FIT–100B–01A FIT–100C–01A	2"C.
6	SPARE	2"C.
7	ALUM–01A ALUM–02A	2"C.
8	ALUM–01C ALUM–02C	2"C.
9	SPARE	2"C.

15 – DUCT BANK DETAIL
NOT TO SCALE

1	PDP1–01C	2"C.
2	PDP2–01C	2"C.
3	LSL–01C, LSH–01C, LSHH–01C	2"C.
4	SPS–01C	2"C.
5	SPS–01A	2"C.
6	SPARE	2"C.

3

16 – DUCT BANK DETAIL
NOT TO SCALE

1	RAS1–01C	2"C.
2	SPARE	2"C.

18 – DUCT BANK DETAIL
NOT TO SCALE

1	EFF–01A	2"C.
2	SPARE	2"C.

19 – DUCT BANK DETAIL
NOT TO SCALE

1	NPWS–01A	2"C.
2	NPWS–01C	2"C.

20 – DUCT BANK DETAIL
NOT TO SCALE

GENERAL NOTES:

1. UNDERGROUND CONDUIT SIZES MAY CHANGE TO A MINIMUM OF 1". CONTRACTOR SHALL BE RESPONSIBLE TO SIZE CONDUITS PER NATIONAL ELECTRICAL CODE.

1

This Record Drawing is a combination of the sealed engineering construction documents for this project, modified by information furnished by the contractor reflecting changes in the project made during construction. The original sealed drawings are on file at the offices of FREESE AND NICHOLS, INC.
RECORD DRAWINGS PREPARED ON: 06/24/20

Freese and Nichols, Inc.
Texas Registered Engineering Firm F-2144

THE SEAL (IF ORIGINALLY APPEARED ON THIS DOCUMENT WAS AUTHORIZED BY JOHN W.P. MANNING, P.E. ON 06/24/20. IT IS A VIOLATION OF LAW FOR ANY PERSON, UNLESS ACTING UNDER THE DIRECTION OF A LICENSED ENGINEER, TO ALTER THIS DOCUMENT WITHOUT PROPER NOTATION OF SUCH ALTERATION. ANY PERSON WHO ALTERS THIS DOCUMENT IS SUBJECT TO PROSECUTION FOR AN OFFENSE UNDER THE TEXAS ENGINEERING PRACTICE ACT.

FREESE and NICHOLS
4040 Broadway Street, Suite 600
San Antonio, Texas 78209-6350
Phone (210) 298-3800
Fax (210) 298-3801
Web – www.freese.com

CITY OF CASTROVILLE
WWTP CAPACITY EXPANSION PROJECT
ELECTRICAL
DUCT BANK DETAILS II

NO.	ISSUE	BY	DATE
1	RECORD DRAWING	JWM	06/24/20
2	PCM#5	JWM	4/14/17
3	ISSUED FOR CONSTRUCTION	JWM	11/18/16
1	CA No.1	JWM	10/25/16

VERIFY SCALE Bar is one inch on original drawing. If not one inch on this sheet, adjust scale.
0 1"

F&N JOB NO. CVL14259
DATE 6/10/16
DESIGNED JWM
DRAWN JWM
REVISED
CHECKED TWZ
FILE NAME EL-ALL-DT-DUCT2.dwg

SHEET E-33
SEQ.

ACAD Rel: 23.0s (LMS Tech)
Filename: N:\ELEC\EL-ALL-DT-DUCT2.dwg
Last Saved: 6/22/2020 4:21 PM Saved By: 03823
Plot Date: 6/23/2020 9:58 AM Plot By: 03823 Filename: N:\ELEC\EL-ALL-DT-DUCT2.dwg

(The legal name must be spelled exactly as filed with the TX SOS, with the County, or in the legal documents forming the entity.)

If the co-applicant is currently a customer with the TCEQ, what is the Customer Number (CN)? You may search for your CN on the TCEQ website at: http://www15.tceq.texas.gov/crpub/

CN: N/A

What is the name and title of the person signing the application? The person must be an executive official meeting signatory requirements in *30 TAC § 305.44*.

Prefix: N/A Last Name, First Name: N/A

Title: N/A Credential: N/A

Provide a brief description of the need for a co-permittee: N/A

C. Core Data Form

Complete the Core Data Form for each customer and include as an attachment. If the customer type selected on the Core Data Form is **Individual**, complete **Attachment 1** of Administrative Report 1.0. See Attachment B – Core Data Form

Section 4. Application Contact Information (Instructions Page 27)

This is the person(s) TCEQ will contact if additional information is needed about this application. Provide a contact for administrative questions and technical questions.

A. Prefix: N/A Last Name, First Name: Kim, Joseph

Title: Engineer Associate I Credential: EIT

Organization Name: K Friese & Associates, LLC

Mailing Address: 9821 Katy Freeway, #600, City, State, Zip Code: Houston, TX 77024

Phone No.: 512-610-7663 E-mail Address: jkim@hwlochner.com

Check one or both: ☒ Administrative Contact ☐ Technical Contact

B. Prefix: N/A Last Name, First Name: Kaboudvand-Garoussi, Nick

Title: Engineer IV Credential: PE

Organization Name: K Friese & Associates, LLC

Mailing Address: 9821 Katy Freeway, #600, City, State, Zip Code: Houston, TX 77024

Phone No.: 713-875-5437 E-mail Address: nkaboudvand@kfriese.com

Check one or both: ☒ Administrative Contact ☒ Technical Contact

Section 5. Permit Contact Information (Instructions Page 27)

Provide the names and contact information for two individuals that can be contacted throughout the permit term.

A. Prefix: N/A Last Name, First Name: Carrasco, Ricardo

Title: Assistant Director of Public Works Credential: REM, A Wastewater License

Organization Name: City of Castroville