Technical Package Cover Page

This file contains the following documents:

1. Summary of application (in plain language)
   - English
   - Alternative Language (Spanish)
2. First notice (NORI-Notice of Receipt of Application and Intent to Obtain a Permit)
   - English
   - Alternative Language (Spanish)
3. Second notice (NAPD-Notice of Preliminary Decision)
   - English
   - Alternative Language (Spanish)
4. Application materials
5. Draft permit
6. Technical summary or fact sheet

Portada de Paquete Técnico

Este archivo contiene los siguientes documentos:

1. Resumen de la solicitud (en lenguaje sencillo)
   - Inglés
   - Idioma alternativo (español)
2. Primer aviso (NORI, Aviso de Recepción de Solicitud e Intención de Obtener un Permiso)
   - Inglés
   - Idioma alternativo (español)
3. Segundo aviso (NAPD, Aviso de Decisión Preliminar)
   - Inglés
   - Idioma alternativo (español)
4. Materiales de la solicitud
5. Proyecto de permiso
6. Resumen técnico u hoja de datos

TEXAS COMMISSION ON ENVIRONMENTAL QUALITY

SUMMARY OF APPLICATION IN PLAIN LANGUAGE FOR TPDES OR TLAP PERMIT APPLICATIONS

Summary of Application (in plain language) Template and Instructions for Texas Pollutant Discharge Elimination System (TPDES) and Texas Land Application (TLAP) Permit Applications

Applicants should use this template to develop a plain language summary of your facility and application as required by Title 30, Texas Administrative Code (30 TAC), Chapter 39, Subchapter H. You may modify the template as necessary to accurately describe your facility as long as the summary includes the following information: (1) the function of the proposed plant or facility; (2) the expected output of the proposed plant or facility; (3) the expected pollutants that may be emitted or discharged by the proposed plant or facility; and (4) how you will control those pollutants, so that the proposed plant will not have an adverse impact on human health or the environment.

Fill in the highlighted areas below to describe your facility and application in plain language. Instructions and examples are provided below. Make any other edits necessary to improve readability or grammar and to comply with the rule requirements. After filling in the information for your facility delete these instructions.

If you are subject to the alternative language notice requirements in 30 TAC Section 39.426, **you must provide a translated copy of the completed plain language summary in the appropriate alternative language as part of your application package**. For your convenience, a Spanish template has been provided below.

ENGLISH TEMPLATE FOR TPDES or TLAP NEW/RENEWAL/AMENDMENT APPLICATIONS DOMESTIC WASTEWATER/STORMWATER

The following summary is provided for this pending water quality permit application being reviewed by the Texas Commission on Environmental Quality as required by 30 TAC Chapter 39. The information provided in this summary may change during the technical review of the application and is not a federal enforceable representation of the permit application.

City of Fulshear (CN600700066) operates the City of Fulshear Water Reclamation Facility (RN101920932), a 1.10 MGD wastewater treatment plant that is used to serve the downtown community of City of Fulshear. The facility is located at 30618 F.M. Highway 1098, in Fulshear, Fort Bend County, Texas 77441. This permit application is to request a renewal for the existing permit.

Discharges from the facility are expected to contain standard domestic wastewater pollutants, such as BOD, Ammonia Nitrogen, and Total Suspended Solids. Domestic wastewater is treated by entering the treatment facility at the headworks before flow splitting into 11 aeration basins, 4 clarifiers, 11 aerobic digesters, 1 chlorine contact basin, and then the existing outfall. Solids are pumped out of the aerobic digesters and then trucked to a landfill.

PLANTILLA EN ESPAÑOL PARA SOLICITUDES NUEVAS/RENOVACIONES/ENMIENDAS DE TPDES o TLAP

AGUAS RESIDUALES DOMESTICAS **/AGUAS PLUVIALES**

El siguiente resumen se proporciona para esta solicitud de permiso de calidad del agua pendiente que está siendo revisada por la Comisión de Calidad Ambiental de Texas según lo requerido por el Capítulo 39 del Código Administrativo de Texas 30. La información proporcionada en este resumen puede cambiar durante la revisión técnica de la solicitud y no es una representación ejecutiva fedérale de la solicitud de permiso.

City of Fulshear (CN600700066) opera a planta de tratamiento de aguas residuales de City of Fulshear (RN101920932), una planta de tratamiento de aguas residuales de 1.10 MGD para atender a la comunidad del centro de la ciudad de Fulshear. La instalación está ubicada en la calle 30618 F.M. Highway 1098, en la Ciudad de Fulshear, Condado de Fort Bend, Texas 77441. Esta solicitud de permiso es para solicitar una renovación del permiso existente.

Se espera que las descargas de la instalación contengan contaminantes de aguas residuales estándares, como demanda biológica de oxigeno, nitrógeno amoniacal, y solidos suspendidos totales. Las aguas residuales domésticas. están tratado por las pantallas localizadas al principio de la planta antes de que el flujo se divida entre 11 tanques de aireación, 4 tanques clarificadores, 11 digestores aeróbicos, 1 tanque de contacto de cloro, y luego el existente. Los sólidos se bombearán desde los digestores aeróbicos y luego se transportarán en camiones a un vertedero .

TEXAS COMMISSION ON ENVIRONMENTAL QUALITY

NOTICE OF RECEIPT OF APPLICATION AND INTENT TO OBTAIN WATER QUALITY PERMIT RENEWAL

PERMIT NO. WQ0013314001

APPLICATION. City of Fulshear, P.O. Box 279, Fulschear, Texas 77441, has applied to the Texas Commission on Environmental Quality (TCEQ) to renew Texas Pollutant Discharge Elimination System (TPDES) Permit No. WQ0013314001 (EPA I.D. No. TX0101052) to authorize the discharge of treated wastewater at a volume not to exceed an annual average flow of 1,100,000 gallons per day. The domestic wastewater treatment facility is located at 30618 Farm-to-Market Road 1093, in the city of Flushear, in Fort Bend County, Texas 77441. The discharge route is from the plant site to an unnamed tributary (locally known as Union Chapel Branch); thence to Bessies Creek; thence to Brazos River Below Navasota River. TCEQ received this application on January 31, 2025. The permit application will be available for viewing and copying at Fulshear City Hall, City Secretary's Office, 6611 West Cross Creek Bend Lane, Fulshear, Texas prior to the date this notice is published in the newspaper. The application, including any updates, and associated notices are available electronically at the following webpage: https://www.tceq.texas.gov/permitting/wastewater/pending-permits/tpdes-applications. This link to an electronic map of the site or facility's general location is provided as a public courtesy and not part of the application or notice. For the exact location, refer to the application. https://gisweb.tceq.texas.gov/LocationMapper/?marker=-95.902222,29.688888&level=18

ALTERNATIVE LANGUAGE NOTICE. Alternative language notice in Spanish is available at: https://www.tceq.texas.gov/permitting/wastewater/pending-permits/tpdes-applications. El aviso de idioma alternativo en español está disponible en https://www.tceq.texas.gov/permitting/wastewater/pending-permits/tpdes-applications.

ADDITIONAL NOTICE. TCEQ's Executive Director has determined the application is administratively complete and will conduct a technical review of the application. After technical review of the application is complete, the Executive Director may prepare a draft permit and will issue a preliminary decision on the application. **Notice of the Application and Preliminary Decision will be published and mailed to those who are on the county-wide mailing list and to those who are on the mailing list for this application. That notice will contain the deadline for submitting public comments.**

PUBLIC COMMENT / PUBLIC MEETING. You may submit public comments or request a public meeting on this application. The purpose of a public meeting is to provide the opportunity to submit comments or to ask questions about the application. TCEQ will hold a public meeting if the Executive Director determines that there is a significant degree of public

interest in the application or if requested by a local legislator. A public meeting is not a contested case hearing.

OPPORTUNITY FOR A CONTESTED CASE HEARING. After the deadline for submitting public comments, the Executive Director will consider all timely comments and prepare a response to all relevant and material, or significant public comments. **Unless the application is directly referred for a contested case hearing, the response to comments, and the Executive Director's decision on the application, will be mailed to everyone who submitted public comments and to those persons who are on the mailing list for this application. If comments are received, the mailing will also provide instructions for requesting reconsideration of the Executive Director's decision and for requesting a contested case hearing.** A contested case hearing is a legal proceeding similar to a civil trial in state district court.

TO REQUEST A CONTESTED CASE HEARING, YOU MUST INCLUDE THE FOLLOWING ITEMS IN YOUR REQUEST: your name, address, phone number; applicant's name and proposed permit number; the location and distance of your property/activities relative to the proposed facility; a specific description of how you would be adversely affected by the facility in a way not common to the general public; a list of all disputed issues of fact that you submit during the comment period and, the statement "[I/we] request a contested case hearing." If the request for contested case hearing is filed on behalf of a group or association, the request must designate the group's representative for receiving future correspondence; identify by name and physical address an individual member of the group who would be adversely affected by the proposed facility or activity; provide the information discussed above regarding the affected member's location and distance from the facility or activity; explain how and why the member would be affected; and explain how the interests the group seeks to protect are relevant to the group's purpose.

Following the close of all applicable comment and request periods, the Executive Director will forward the application and any requests for reconsideration or for a contested case hearing to the TCEQ Commissioners for their consideration at a scheduled Commission meeting.

The Commission may only grant a request for a contested case hearing on issues the requestor submitted in their timely comments that were not subsequently withdrawn. **If a hearing is granted, the subject of a hearing will be limited to disputed issues of fact or mixed questions of fact and law relating to relevant and material water quality concerns submitted during the comment period.**

TCEQ may act on an application to renew a permit for discharge of wastewater without providing an opportunity for a contested case hearing if certain criteria are met.

MAILING LIST. If you submit public comments, a request for a contested case hearing or a reconsideration of the Executive Director's decision, you will be added to the mailing list for this specific application to receive future public notices mailed by the Office of the Chief Clerk. In addition, you may request to be placed on: (1) the permanent mailing list for a specific applicant name and permit number; and/or (2) the mailing list for a specific county. If you wish to be placed on the permanent and/or the county mailing list, clearly specify which list(s) and send your request to TCEQ Office of the Chief Clerk at the address below.

INFORMATION AVAILABLE ONLINE. For details about the status of the application, visit the Commissioners' Integrated Database at www.tceq.texas.gov/goto/cid. Search the database using the permit number for this application, which is provided at the top of this notice.

AGENCY CONTACTS AND INFORMATION. All public comments and requests must be submitted either electronically at **https://www14.tceq.texas.gov/epic/eComment/**, or in writing to the Texas Commission on Environmental Quality, Office of the Chief Clerk, MC-105, P.O. Box 13087, Austin, Texas 78711-3087. Please be aware that any contact information you provide, including your name, phone number, email address and physical address will become part of the agency's public record. For more information about this permit application or the permitting process, please call the TCEQ Public Education Program, Toll Free, at 1-800-687-4040 or visit their website at www.tceq.texas.gov/goto/pep. Si desea información en Español, puede llamar al 1-800-687-4040.

Further information may also be obtained from City of Fulshear at the address stated above or by calling Mr. Raul Dominguez, P.E., Kimley-Horn & Associates, Inc., at 346-439-8113.

Issuance Date: February 26, 2025

Comisión de Calidad Ambiental del Estado de Texas

AVISO DE RECIBO DE LA SOLICITUD Y
EL INTENTO DE OBTENER PERMISO PARA LA CALIDAD DEL AGUA
RENOVACION

PERMISO NO. WQ0013314001

SOLICITUD. La Ciudad de Fulshear, P.O Box 279, Fulshear, Texas 77441 ha solicitado a la Comisión de Calidad Ambiental del Estado de Texas (TCEQ) para renovar el Permiso No. WQ0013314001 (EPA I.D. No. TX 0101052) del Sistema de Eliminación de Descargas de Contaminantes de Texas (TPDES) para autorizar la descarga de aguas residuales tratadas en un volumen que no sobrepasa un flujo promedio diario de 1,100,00 de galones por día. La planta está ubicada en la calle 30618 Farm-to-Market Road 1093, en la Ciudad de Fulshear, en el Condado de Fort Bend, Texas 77441. La ruta de descarga es del sitio de la planta a un afluente sin nombre (conocido localmente como la rama de Unión Chapel); después al arroyo de Bessie; y después al rio Brazos abajo del rio Navasota. La TCEQ recibió esta solicitud el 31 de Enero del 2025. La solicitud para el permiso está disponible para leerla y copiarla en el ayuntamiento de la ciudad de Fulshear, en la oficina de la secretaria de la Ciudad, localizada en la calle 6611 West Cross Creek Bend Lane, Fulshear, Texas antes de la fecha de publicación de este aviso en el periódico. La solicitud (cualquier actualización y aviso inclusive) está disponible electrónicamente en la siguiente página web: https://www.tceq.texas.gov/permitting/wastewater/pending-permits/tpdes-applications. Este enlace a un mapa electrónico de la ubicación general del sitio o de la instalación es proporcionado como una cortesía y no es parte de la solicitud o del aviso. Para la ubicación exacta, consulte la solicitud. https://gisweb.tceq.texas.gov/LocationMapper/?marker=-95.902222,29.688888&level=18

AVISO ADICIONAL. El Director Ejecutivo de la TCEQ ha determinado que la solicitud es administrativamente completa y conducirá una revisión técnica de la solicitud. Después de completar la revisión técnica, el Director Ejecutivo puede preparar un borrador del permiso y emitirá una Decisión Preliminar sobre la solicitud. **El aviso de la solicitud y la decisión preliminar serán publicados y enviado a los que están en la lista de correo de las personas a lo largo del condado que desean recibir los avisos y los que están en la lista de correo que desean recibir avisos de esta solicitud. El aviso dará la fecha límite para someter comentarios públicos.**

COMENTARIO PUBLICO / REUNION PUBLICA. Usted puede presentar comentarios públicos o pedir una reunión pública sobre esta solicitud. El propósito de una reunión pública es dar la oportunidad de presentar comentarios o hacer preguntas acerca de la solicitud. La TCEQ realiza una reunión pública si el Director Ejecutivo determina que hay un grado de interés público suficiente en la solicitud o si un legislador local lo pide. Una reunión pública no es una audiencia administrativa de lo contencioso.

OPORTUNIDAD DE UNA AUDIENCIA ADMINISTRATIVA DE LO CONTENCIOSO. Después del plazo para presentar comentarios públicos, el Director Ejecutivo considerará todos los comentarios apropiados y preparará una respuesta a todo los comentarios públicos esenciales, pertinentes, o significativos. **A menos que la solicitud haya sido referida directamente a una audiencia administrativa de lo contencioso, la respuesta a los comentarios y la decisión del Director Ejecutivo sobre la solicitud serán enviados por correo a todos los que presentaron un comentario público y a las personas que están en la lista para recibir avisos sobre esta solicitud. Si se reciben comentarios, el aviso también proveerá instrucciones para pedir una reconsideración de la decisión del Director Ejecutivo y para pedir una audiencia administrativa de lo contencioso.** Una audiencia administrativa de lo contencioso es un procedimiento legal similar a un procedimiento legal civil en un tribunal de distrito del estado.

PARA SOLICITAR UNA AUDIENCIA DE CASO IMPUGNADO, USTED DEBE INCLUIR EN SU SOLICITUD LOS SIGUIENTES DATOS: su nombre, dirección, y número de teléfono; el nombre del solicitante y número del permiso; la ubicación y distancia de su propiedad/actividad con respecto a la instalación; una descripción específica de la forma cómo usted sería afectado adversamente por el sitio de una manera no común al público en general; una lista de todas las cuestiones de hecho en disputa que usted presente durante el período de comentarios; y la declaración "[Yo/nosotros] solicito/solicitamos una audiencia de caso impugnado". Si presenta la petición para una audiencia de caso impugnado de parte de un grupo o asociación, debe identificar una persona que representa al grupo para recibir correspondencia en el futuro; identificar el nombre y la dirección de un miembro del grupo que sería afectado adversamente por la planta o la actividad propuesta; proveer la información indicada anteriormente con respecto a la ubicación del miembro afectado y su distancia de la planta o actividad propuesta; explicar cómo y porqué el miembro sería afectado; y explicar cómo los intereses que el grupo desea proteger son pertinentes al propósito del grupo.

Después del cierre de todos los períodos de comentarios y de petición que aplican, el Director Ejecutivo enviará la solicitud y cualquier petición para reconsideración o para una audiencia de caso impugnado a los Comisionados de la TCEQ para su consideración durante una reunión programada de la Comisión. La Comisión sólo puede conceder una solicitud de una audiencia de caso impugnado sobre los temas

que el solicitante haya presentado en sus comentarios oportunos que no fueron retirados posteriormente. Si se concede una audiencia, el tema de la audiencia estará limitado a cuestiones de hecho en disputa o cuestiones mixtas de hecho y de derecho relacionadas a intereses pertinentes y materiales de calidad del agua que se hayan presentado durante el período de comentarios.

Si ciertos criterios se cumplen, la TCEQ puede actuar sobre una solicitud para renovar un permiso sin proveer una oportunidad de una audiencia administrativa de lo contencioso.

LISTA DE CORREO. Si somete comentarios públicos, un pedido para una audiencia administrativa de lo contencioso o una reconsideración de la decisión del Director Ejecutivo, la Oficina del Secretario Principal enviará por correo los avisos públicos en relación con la solicitud. Ademas, puede pedir que la TCEQ ponga su nombre en una or mas de las listas correos siguientes (1) la lista de correo permanente para recibir los avisos de el solicitante indicado por nombre y número del permiso específico y/o (2) la lista de correo de todas las solicitudes en un condado especifico. Si desea que se agrega su nombre en una de las listas designe cual lista(s) y envia por correo su pedido a la Oficina del Secretario Principal de la TCEQ.

CONTACTOS E INFORMACIÓN DE LA TCEQ. Todos los comentarios escritos del público y los para pedidos una reunión deben ser presentados a la Oficina del Secretario Principal, MC 105, TCEQ, P.O. Box 13087, Austin, TX 78711-3087 o por el internet at www.tceq.texas.gov/about/comments.html. Tenga en cuenta que cualquier información personal que usted proporcione, incluyendo su nombre, número de teléfono, dirección de correo electrónico y dirección física pasarán a formar parte del registro público de la Agencia. Si necesita más información en Español sobre esta solicitud para un permiso o el proceso del permiso, por favor llame a El Programa de Educación Pública de la TCEQ, sin cobro, al 1-800-687-4040. La información general sobre la TCEQ puede ser encontrada en nuestro sitio de la red: www.tceq.texas.gov.

También se puede obtener información adicional de la Ciudad de Fulshear en la dirección indicada arriba o llamando al Ingeniero Raul Dominguez, P.E., de Kimley-Horn & Associates, Inc., al telefono 346-439-8113.

Fecha de emisión 26 de febrero de 2025

Texas Commission on Environmental Quality

NOTICE OF APPLICATION AND PRELIMINARY DECISION FOR TPDES PERMIT FOR MUNICIPAL WASTEWATER

RENEWAL

PERMIT NO. WQ0013314001

APPLICATION AND PRELIMINARY DECISION. City of Fulshear, P.O. Box 279, Fulshear, Texas 77441, has applied to the Texas Commission on Environmental Quality (TCEQ) for a renewal of Texas Pollutant Discharge Elimination System (TPDES) Permit No. WQ0013314001, which authorizes the discharge of treated domestic wastewater at an annual average flow not to exceed 1,100,000 gallons per day. TCEQ received this application on January 31, 2025.

The facility is located at 30618 Farm-to-Market Road 1093, in the City of Fulshear, Fort Bend County, Texas 77441. The treated effluent is discharged to an unnamed tributary (locally known as Union Chapel Branch), thence to Bessies Creek, thence to Brazos River Below Navasota River in Segment No. 1202 of the Brazos River Basin. The unclassified receiving water uses are minimal aquatic life use for unnamed tributary (locally known as Union Chapel Branch), and high aquatic life use for Bessies Creek. The designated uses for Segment No. 1202 are primary contact recreation, public water supply, and high aquatic life use. This link to an electronic map of the site or facility's general location is provided as a public courtesy and is not part of the application or notice. For the exact location, refer to the application. https://gisweb.tceq.texas.gov/LocationMapper/?marker=-95.902222,29.688888&level=18

The TCEQ Executive Director has completed the technical review of the application and prepared a draft permit. The draft permit, if approved, would establish the conditions under which the facility must operate. The Executive Director has made a preliminary decision that this permit, if issued, meets all statutory and regulatory requirements. The permit application, Executive Director's preliminary decision, and draft permit are available for viewing and copying at Fulshear City Hall, City Secretary's Office, 6611 West Cross Creek Bend Lane, Fulshear, Texas. The application, including any updates, and associated notices are available electronically at the following webpage: https://www.tceq.texas.gov/permitting/wastewater/tpdes-applications.

ALTERNATIVE LANGUAGE NOTICE. Alternative language notice in Spanish is available at https://www.tceq.texas.gov/permitting/wastewater/plain-language-summaries-and-public- notices. El aviso de idioma alternativo en español está disponible en https://www.tceq.texas.gov/permitting/wastewater/plain-language-summaries-and-public-notices.

PUBLIC COMMENT / PUBLIC MEETING. You may submit public comments or request a public meeting about this application. The purpose of a public meeting is to provide the opportunity to submit comments or to ask questions about the application. TCEQ holds a public meeting if the Executive Director determines that there is a significant degree of public interest in the application or if requested by a local legislator. A public meeting is not a contested case hearing.

OPPORTUNITY FOR A CONTESTED CASE HEARING. After the deadline for submitting public comments, the Executive Director will consider all timely comments and prepare a response to all relevant and material, or significant public comments. **Unless the application is directly referred for a contested case hearing, the response to comments will be mailed to everyone who submitted public comments and to those persons who are on the mailing list for this application. If comments are received, the mailing will also provide instructions for requesting a contested case hearing or reconsideration of the Executive Director's decision.** A contested case hearing is a legal proceeding similar to a civil trial in a state district court.

TO REQUEST A CONTESTED CASE HEARING, YOU MUST INCLUDE THE FOLLOWING ITEMS IN YOUR REQUEST: your name, address, phone number; applicant's name and proposed permit number; the location and distance of your property/activities relative to the proposed facility; a specific description of how you would be adversely affected by the facility in a way not common to the general public; a list of all disputed issues of fact that you submit during the comment period; and the statement "[I/we] request a contested case hearing." If the request for contested case hearing is filed on behalf of a group or association, the request must designate the group's representative for receiving future correspondence; identify by name and physical address an individual member of the group who would be adversely affected by the proposed facility or activity; provide the information discussed above regarding the affected member's location and distance from the facility or activity; explain how and why the member would be affected; and explain how the interests the group seeks to protect are relevant to the group's purpose.

Following the close of all applicable comment and request periods, the Executive Director will forward the application and any requests for reconsideration or for a contested case hearing to the TCEQ Commissioners for their consideration at a scheduled Commission meeting.

The Commission may only grant a request for a contested case hearing on issues the requestor submitted in their timely comments that were not subsequently withdrawn. **If a hearing is granted, the subject of a hearing will be limited to disputed issues of fact or mixed questions of fact and law relating to relevant and material water quality concerns submitted during the comment period. TCEQ may act on an application to renew a permit for discharge of wastewater without providing an opportunity for a contested case hearing if certain criteria are met.**

EXECUTIVE DIRECTOR ACTION. The Executive Director may issue final approval of the application unless a timely contested case hearing request or request for reconsideration is filed. If a timely hearing request or request for reconsideration is filed, the Executive Director will not issue final approval of the permit and will forward the application and request to the TCEQ

Commissioners for their consideration at a scheduled Commission meeting.
MAILING LIST. If you submit public comments, a request for a contested case hearing or a reconsideration of the Executive Director's decision, you will be added to the mailing list for this specific application to receive future public notices mailed by the Office of the Chief Clerk. In addition, you may request to be placed on: (1) the permanent mailing list for a specific applicant name and permit number; and/or (2) the mailing list for a specific county. If you wish to be placed on the permanent and/or the county mailing list, clearly specify which list(s) and send your request to TCEQ Office of the Chief Clerk at the address below. **All written public comments and public meeting requests must be submitted to the Office of the Chief Clerk, MC 105, Texas Commission on Environmental Quality, P.O. Box 13087, Austin, TX 78711-3087 or electronically at www.tceq.texas.gov/goto/comment within 30 days from the date of newspaper publication of this notice.**

INFORMATION AVAILABLE ONLINE. For details about the status of the application, visit the Commissioners' Integrated Database at www.tceq.texas.gov/goto/cid. Search the database using the permit number for this application, which is provided at the top of this notice.

AGENCY CONTACTS AND INFORMATION. Public comments and requests must be submitted either electronically at www.tceq.texas.gov/goto/comment, or in writing to the Texas Commission on Environmental Quality, Office of the Chief Clerk, MC 105, P.O. Box 13087, Austin, Texas 78711-3087. Any personal information you submit to the TCEQ will become part of the agency's record; this includes email addresses. For more information about this permit application or the permitting process, please call the TCEQ Public Education Program, Toll Free, at 1-800-687-4040 or visit their website at www.tceq.texas.gov/goto/pep. Si desea información en Español, puede llamar al 1-800-687-4040.

Further information may also be obtained from City of Fulshear at the address stated above or by calling Mr. Dominguez, Raul, Professional Engineer, Kimley-Horn &Associates, Inc., at 346- 439-8113.

Issuance Date: October 10, 2025

Comisión De Calidad Ambiental Del Estado De Texas

AVISO DE LA SOLICITUD Y DECISIÓN PRELIMINAR PARA EL PERMISO DEL SISTEMA DE ELIMINACION DE DESCARGAS DE CONTAMINANTES DE TEXAS (TPDES) PARA AGUAS RESIDUALES MUNICIPALES

RENOVACION

PERMISO NO. WQ0013314001

SOLICITUD Y DECISIÓN PRELIMINAR. La Ciudad de Fulshear, P.O. Box 279, Fulshear, Texas 77441, ha solicitado a la Comisión de Calidad Ambiental del Estado de Texas (TCEQ) por una renovación al Sistema de Eliminación de Descargas Contaminantes de Texas (TPDES), Permiso No. WQ0013314001, para autorizar la descarga de aguas residuales domésticas tratadas con un caudal medio anual que no exceda la cantidad de 1,100,000 de galones por día. La TCEQ recibió esta solicitud el de Enero 31 de 2025.

La planta está ubicada en la calle 30618 Farm-to-Market Road 1093, en la ciudad de Fulshear, en el condado de Fort Bend, Texas, 77441. El efluente tratado es descargado a un afluente sin nombre (conocido localmente como el arroyo Union Chapel), después al arroyo Bessie Creek, y después al rio Brazos localizado debajo del rio Navasota en el Segmento No. 1202 de la Cuenca del Río Brazos. Los usos no clasificados de las aguas receptoras son limitados usos de la vida acuática para el afluente sin nombre (conocido localmente como el arroyo Union Chapel), y elevados usos de vida acuática para el arroyo Bessie. Los usos designados para el Segmento No. 1202 son recreación con contacto, abastecimiento de agua potable, y elevados usos de vida acuática. Este enlace a un mapa electrónico de la ubicación general del sitio o de la instalación es proporcionado como una cortesía y no es parte de la solicitud o del aviso. Para la ubicación exacta, consulte la solicitud. https://gisweb.tceq.texas.gov/LocationMapper/?marker=-95.902222,29.688888&level=18

El Director Ejecutivo de la TCEQ ha completado la revisión técnica de la solicitud y ha preparado un borrador del permiso. El borrador del permiso, si es aprobado, establecería las condiciones bajo las cuales la instalación debe operar. El Director Ejecutivo ha tomado una decisión preliminar que si este permiso es emitido, cumple con todos los requisitos normativos y legales. La solicitud del permiso, la decisión preliminar del Director Ejecutivo y el borrador del permiso están disponibles electrónicamente en la siguiente página web: https://www.tceq.texas.gov/permitting/wastewater/pending-permits/tpdes-applications.

AVISO DE IDIOMA ALTERNATIVO. El aviso de idioma alternativo en español está disponible en https://www.tceq.texas.gov/permitting/wastewater/plain-language-summaries-and-public-notices.

COMENTARIO PUBLICO / REUNION PUBLICA. Usted puede presentar comentarios públicos adicionales o pedir una reunión pública sobre esta solicitud. El propósito de una reunión pública es dar la oportunidad de presentar comentarios o hacer preguntas acerca de la solicitud. La TCEQ realiza una reunión pública si el Director Ejecutivo determina que hay un grado de interés público suficiente en la solicitud o si un legislador local lo pide. Una reunión pública no es una audiencia administrativa de lo contencioso.

OPORTUNIDAD DE UNA AUDIENCIA ADMINISTRATIVA DE LO CONTENCIOSO. Después del plazo para presentar comentarios públicos, el Director Ejecutivo considerará todos los comentarios apropiados y preparará una respuesta a todo los comentarios públicos esenciales, pertinentes, o significativos. **A menos que la solicitud haya sido referida directamente a una audiencia administrativa de lo contencioso, la respuesta a los comentarios y la decisión del Director Ejecutivo sobre la solicitud serán enviados por correo a todos los que presentaron un comentario público y a las personas que están en la lista para recibir avisos sobre esta solicitud. Si se reciben comentarios, el aviso también proveerá instrucciones para pedir una reconsideración de la decisión del Director Ejecutivo y para pedir una audiencia administrativa de lo contencioso.** Una audiencia administrativa de lo contencioso es un procedimiento legal similar a un procedimiento legal civil en un tribunal de distrito del estado.

PARA SOLICITAR UNA AUDIENCIA DE CASO IMPUGNADO, USTED DEBE INCLUIR EN SU SOLICITUD LOS SIGUIENTES DATOS: su nombre, dirección, y número de teléfono; el nombre del solicitante y número del permiso; la ubicación y distancia de su propiedad/actividad con respecto a la instalación; una descripción específica de la forma cómo usted sería afectado adversamente por el sitio de una manera no común al público en general; una lista de todas las cuestiones de hecho en disputa que usted presente durante el período de comentarios; y la declaración "[Yo/nosotros] solicito/solicitamos una audiencia de caso impugnado". Si presenta la petición para una audiencia de caso impugnado de parte de un grupo o asociación, debe identificar una persona que representa al grupo para recibir correspondencia en el futuro; identificar el nombre y la dirección de un miembro del grupo que sería afectado adversamente por la planta o la actividad propuesta; proveer la información indicada anteriormente con respecto a la ubicación del miembro afectado y su distancia de la planta o actividad propuesta; explicar cómo y porqué el miembro sería afectado; y explicar cómo los intereses que el grupo desea proteger son pertinentes al propósito del grupo.

Después del cierre de todos los períodos de comentarios y de petición que aplican, el Director Ejecutivo enviará la solicitud y cualquier petición para reconsideración o para una audiencia de caso impugnado a los Comisionados de la TCEQ para su consideración durante una reunión programada de la Comisión.

La Comisión sólo puede conceder una solicitud de una audiencia de caso impugnado sobre los temas que el solicitante haya presentado en sus comentarios oportunos que no fueron retirados posteriormente. **Si se concede una audiencia, el tema de la audiencia estará limitado a cuestiones de hecho en disputa o cuestiones mixtas de hecho y de derecho relacionadas a intereses pertinentes y materiales de calidad del agua que se hayan presentado durante el período de comentarios. Si ciertos criterios se cumplen, la TCEQ puede actuar sobre una solicitud para renovar un permiso sin proveer una oportunidad de una audiencia administrativa de lo contencioso.**

ACCIÓN DEL DIRECTOR EJECUTIVO. El Director Ejecutivo puede emitir una aprobación final de la solicitud a menos que exista un pedido antes del plazo de vencimiento de una audiencia administrativa de lo contencioso o se ha presentado un pedido de reconsideración. Si un pedido ha llegado antes del plazo de vencimiento de la audiencia o el pedido de reconsideración ha sido presentado, el Director Ejecutivo no emitirá una aprobación final sobre el permiso y enviará la solicitud y el pedido a los Comisionados de la TECQ para consideración en una reunión programada de la Comisión.

LISTA DE CORREO. Si envía comentarios públicos, una solicitud de una audiencia de caso impugnado o una reconsideración de la decisión del Director Ejecutivo, se le agregará a la lista de correo de esta solicitud específica para recibir futuros avisos públicos enviados por correo por la Oficina del Secretario Oficial. Además, puede solicitar ser colocado en: (1) la lista de correo permanente para un nombre de solicitante específico y número de permiso; y/o (2) la lista de correo para un condado específico. Si desea ser colocado en la lista de correo permanente y / o del condado, especifique claramente qué lista (s) y envíe su solicitud a la Oficina del Secretario Oficial de la TCEQ a la dirección a continuación.

Todos los comentarios públicos escritos y las solicitudes de reunión pública deben enviarse a Office of the Chief Clerk, MC 105, TCEQ, P.O. Box 13087, Austin, TX 78711-3087 o electrónicamente a www.tceq.texas.gov/goto/comment **dentro de los 30 días a partir de la fecha de publicación de este aviso en el periódico.**
INFORMACIÓN DISPONIBLE EN LÍNEA. Para obtener más información sobre el estado de la solicitud, visite la Base de Datos Integrada de los Comisionados en www.tceq.texas.gov/goto/cid. Busque en la base de datos el número de permiso de esta solicitud, que se encuentra en la parte superior de este aviso.

CONTACTOS E INFORMACIÓN DE LA AGENCIA. Los comentarios y solicitudes públicas deben enviarse electrónicamente a www.tceq.texas.gov/goto/comment, o por escrito a Texas Commission on Environmental Quality, Office of the Chief Clerk, MC-105, P.O. Box 13087, Austin, Texas 78711-3087. Cualquier información personal que envíe a la TCEQ pasará a formar parte del registro de la agencia; esto incluye las direcciones de correo electrónico. Para obtener más información sobre esta solicitud de permiso o el proceso de permisos, llame al Programa de Educación Pública de TCEQ, línea gratuita, al 1-800-687-4040 o visite su sitio web en www.tceq.texas.gov/goto/pep. Si desea información en español, puede llamar al 1-800-687-4040.

También se puede obtener información adicional de la Ciudad de Fulshear en la dirección indicada arriba o llamando al Sr. Raul Dominguez, Kimley-Horn & Associates, al numero 346-439-8113.

Fecha de emisión: el de octubre 10 de 2025.

Kimley»Horn

January 30, 2025

Texas Commission on Environmental Quality
Applications Review and Processing Team (MF 148)
Building F, Room 2101
12100 Park 35 Circle
Austin, Texas 76753

RE: ***Discharge Permit for City of Fulshear Water Reclamation Facility – TPDES Permit Renewal***
Permit Number: WQ0013314001
CN: 600700066
RN: 101920932

Dear Water Quality Team:

This letter serves to transmit the application for the renewal of the City of Fulshear Water Reclamation Facility discharge permit. It is the Owner's intent to submit the documents outlined below and within this application to secure a place in the TCEQ review system and begin the TPDES permit renewal application process.

The permit application follows this letter within the following attachments:

- Attachment A. Domestic Administrative Report 1.0
- Attachment B. Supplemental Permit Information Form (SPIF)
- Attachment C. SPIF Required USGS Map
- Attachment D. TCEQ Core Data Form
- Attachment E. Domestic Technical Report 1.0
- Attachment F. Domestic Technical Report Worksheet 2.0
- Attachment G. Domestic Technical Report Worksheet 4.0
- Attachment H. Domestic Technical Report Worksheet 5.0
- Attachment I. Domestic Technical Report Worksheet 6.0
- Attachment J. Original USGS Map
- Attachment K. ePay Voucher(s)
- Attachment L. Plain Language Summary Form (TCEQ-20972)
- Attachment M. Process Flow Diagram
- Attachment N. Site Drawing

RECEIVED
JAN 31 2025
Water Quality Applications Team

If you have any questions regarding this project, please contact me at raul.dominguez@kimley-horn.com or 346-439-8113.
Sincerely,
KIMLEY-HORN AND ASSOCIATES, INC. Texas Firm No. 928

Raul E. Dominguez

Raul Dominguez, P.E. (Texas License No. 149364)

ATTACHMENT A

DOMESTIC ADMINISTRATIVE REPORT 1.0

TEXAS COMMISSION ON ENVIRONMENTAL QUALITY

DOMESTIC WASTEWATER PERMIT APPLICATION CHECKLIST

Complete and submit this checklist with the application.

APPLICANT NAME: City of Fulshear, Texas

PERMIT NUMBER (If new, leave blank): WQ0013314001

Indicate if each of the following items is included in your application.

	Y	N
Administrative Report 1.0	☒	☐
Administrative Report 1.1	☐	☒
SPIF	☒	☐
Core Data Form	☒	☐
Summary of Application (PLS)	☒	☐
Public Involvement Plan Form	☐	☒
Technical Report 1.0	☒	☐
Technical Report 1.1	☐	☒
Worksheet 2.0	☒	☐
Worksheet 2.1	☐	☒
Worksheet 3.0	☐	☒
Worksheet 3.1	☐	☒
Worksheet 3.2	☐	☒
Worksheet 3.3	☐	☒
Worksheet 4.0	☒	☐
Worksheet 5.0	☒	☐
Worksheet 6.0	☒	☐
Worksheet 7.0	☐	☒

	Y	N
Original USGS Map	☒	☐
Affected Landowners Map	☐	☒
Landowner Disk or Labels	☐	☒
Buffer Zone Map	☐	☒
Flow Diagram	☒	☐
Site Drawing	☒	☐
Original Photographs	☐	☒
Design Calculations	☐	☒
Solids Management Plan	☐	☒
Water Balance	☐	☒

RECEIVED
JAN 31 2025
Water Quality Applications Team

For TCEQ Use Only

Segment Number _____ County _____
Expiration Date _____ Region _____
Permit Number _____

TEXAS COMMISSION ON ENVIRONMENTAL QUALITY

DOMESTIC WASTEWATER PERMIT APPLICATION ADMINISTRATIVE REPORT 1.0

For any questions about this form, please contact the Applications Review and Processing Team at 512-239-4671.

Section 1. Application Fees (Instructions Page 26)

Indicate the amount submitted for the application fee (check only one).

Flow	New/Major Amendment	Renewal
<0.05 MGD	$350.00 ☐	$315.00 ☐
≥0.05 but <0.10 MGD	$550.00 ☐	$515.00 ☐
≥0.10 but <0.25 MGD	$850.00 ☐	$815.00 ☐
≥0.25 but <0.50 MGD	$1,250.00 ☐	$1,215.00 ☐
≥0.50 but <1.0 MGD	$1,650.00 ☐	$1,615.00 ☐
≥1.0 MGD	$2,050.00 ☐	$2,015.00 ☒

Minor Amendment (for any flow) $150.00 ☐

Payment Information:

Mailed Check/Money Order Number: Click to enter text.

Check/Money Order Amount: Click to enter text.

Name Printed on Check: Click to enter text.

EPAY Voucher Number: 744785 & 744786

Copy of Payment Voucher enclosed? Yes ☐

Section 2. Type of Application (Instructions Page 26)

a. Check the box next to the appropriate authorization type.

☒ Publicly Owned Domestic Wastewater

☐ Privately-Owned Domestic Wastewater

☐ Conventional Water Treatment

b. Check the box next to the appropriate facility status.

☒ Active ☐ Inactive

c. Check the box next to the appropriate permit type.

- ☒ TPDES Permit
- ☐ TLAP
- ☐ TPDES Permit with TLAP component
- ☐ Subsurface Area Drip Dispersal System (SADDS)

d. Check the box next to the appropriate application type

- ☐ New
- ☐ Major Amendment *with* Renewal
- ☐ Major Amendment *without* Renewal
- ☒ Renewal without changes
- ☐ Minor Amendment *with* Renewal
- ☐ Minor Amendment *without* Renewal
- ☐ Minor Modification of permit

e. For amendments or modifications, describe the proposed changes: Click to enter text.

f. For existing permits:

Permit Number: WQ00 13314001

EPA I.D. (TPDES only): TX 0101052

Expiration Date: February 10, 2025

Section 3. Facility Owner (Applicant) and Co-Applicant Information (Instructions Page 26)

A. The owner of the facility must apply for the permit.

What is the Legal Name of the entity (applicant) applying for this permit?

City of Fulshear

(The legal name must be spelled exactly as filed with the Texas Secretary of State, County, or in the legal documents forming the entity.)

If the applicant is currently a customer with the TCEQ, what is the Customer Number (CN)? You may search for your CN on the TCEQ website at http://www15.tceq.texas.gov/crpub/

CN: 600700066

What is the name and title of the person signing the application? The person must be an executive official meeting signatory requirements in *30 TAC § 305.44.*

Prefix: Mr. Last Name, First Name: McCoy, Don

Title: Mayor Credential: Click to enter text.

B. Co-applicant information. Complete this section only if another person or entity is required to apply as a co-permittee.

What is the Legal Name of the co-applicant applying for this permit?

Click to enter text.

(The legal name must be spelled exactly as filed with the TX SOS, with the County, or in the legal documents forming the entity.)

If the co-applicant is currently a customer with the TCEQ, what is the Customer Number (CN)? You may search for your CN on the TCEQ website at: http://www15.tceq.texas.gov/crpub/

CN: Click to enter text.

What is the name and title of the person signing the application? The person must be an executive official meeting signatory requirements in *30 TAC § 305.44*.

Prefix: Click to enter text. Last Name, First Name: Click to enter text.

Title: Click to enter text. Credential: Click to enter text.

Provide a brief description of the need for a co-permittee: Click to enter text.

C. Core Data Form

Complete the Core Data Form for each customer and include as an attachment. If the customer type selected on the Core Data Form is **Individual**, complete **Attachment 1** of Administrative Report 1.0. Attachment D

Section 4. Application Contact Information (Instructions Page 27)

This is the person(s) TCEQ will contact if additional information is needed about this application. Provide a contact for administrative questions and technical questions.

A. Prefix: Mr. Last Name, First Name: McCoy, Don

Title: Mayor Credential: Click to enter text.

Organization Name: City of Fulshear

Mailing Address: P.O. Box 279 City, State, Zip Code: Fulshear, Texas 77441

Phone No.: 281-346-1796 E-mail Address: dmccoy@fulsheartexas.gov

Check one or both: ☒ Administrative Contact ☐ Technical Contact

B. Prefix: Mr. Last Name, First Name: Dominguez, Raul

Title: Professional Engineer Credential: P.E.

Organization Name: Kimley-Horn & Associates, Inc.

Mailing Address: 11700 Katy Freeway City, State, Zip Code: Houston, Texas, 77079

Phone No.: 346-493-8113 E-mail Address: raul.dominguez@kimley-horn.com

Check one or both: ☒ Administrative Contact ☒ Technical Contact

Section 5. Permit Contact Information (Instructions Page 27)

Provide the names and contact information for two individuals that can be contacted throughout the permit term.

A. Prefix: Mr. Last Name, First Name: Glynn, Ben

Title: Utilities Director Credential: Click to enter text.

Organization Name: City of Fulshear

Mailing Address: 6611 W Cross Creek Bend Lane City, State, Zip Code: Fulshear, Texas 77441

Phone No.: 281-346-1796 E-mail Address: bglynn@fulsheartexas.gov

B. Prefix: Mr. Last Name, First Name: Goodlander, Zach

Title: City Manager Credential: Click to enter text.

Organization Name: City of Fulshear

Mailing Address: P.O. Box 279 City, State, Zip Code: Fulshear, Texas 77441

Phone No.: 281-346-1796 E-mail Address: zgoodlander@fulsheartexas.gov

Section 6. Billing Contact Information (Instructions Page 27)

The permittee is responsible for paying the annual fee. The annual fee will be assessed to permits ***in effect on September 1 of each year***. The TCEQ will send a bill to the address provided in this section. The permittee is responsible for terminating the permit when it is no longer needed (using form TCEQ-20029).

Prefix: Mr. Last Name, First Name: Glynn, Ben

Title: Utilities Director Credential: Click to enter text.

Organization Name: City of Fulshear

Mailing Address: 6611 W Cross Creek Bend Lane City, State, Zip Code: Fulshear, Texas 77441

Phone No.: 281-346-1796 E-mail Address: bglynn@fulsheartexas.gov

Section 7. DMR/MER Contact Information (Instructions Page 27)

Provide the name and complete mailing address of the person delegated to receive and submit Discharge Monitoring Reports (DMR) (EPA 3320-1) or maintain Monthly Effluent Reports (MER).

Prefix: Mr. Last Name, First Name: Glynn, Ben

Title: Utilities Director Credential: Click to enter text.

Organization Name: City of Fulshear

Mailing Address: 6611 W Cross Creek Bend Lane City, State, Zip Code: Fulshear, Texas 77441

Phone No.: 281-346-1796 E-mail Address: bglynn@fulsheartexas.gov

Section 8. Public Notice Information (Instructions Page 27)

A. Individual Publishing the Notices

Prefix: Mr. Last Name, First Name: Dominguez, Raul

Title: Professional Engineer Credential: P.E.

Organization Name: Kimley-Horn & Associates, Inc.

Mailing Address: 11700 Katy Freeway, Suite #800 City, State, Zip Code: Houston, TX, 77079

Phone No.: 346-439-8113 E-mail Address: raul.dominguez@kimley-horn.com

B. Method for Receiving Notice of Receipt and Intent to Obtain a Water Quality Permit Package

Indicate by a check mark the preferred method for receiving the first notice and instructions:

☒ E-mail Address

☐ Fax

☒ Regular Mail

C. Contact permit to be listed in the Notices

Prefix: Mr. Last Name, First Name: Dominguez, Raul

Title: Professional Engineer Credential: P.E.

Organization Name: Kimley-Horn & Associates, Inc.

Mailing Address: 11700 Katy Freeway, Suite #800 City, State, Zip Code: Houston, TX 77043

Phone No.: 346-439-8113 E-mail Address: raul.dominguez@kimley-horn.com

D. Public Viewing Information

If the facility or outfall is located in more than one county, a public viewing place for each county must be provided.

Public building name: City of Fulshear City Hall

Location within the building: City Secretary's Office

Physical Address of Building: 6611 W Cross Creek Bend Ln

City: Fulshear County: Fort Bend

Contact (Last Name, First Name): Mariela Rodriguez

Phone No.: 281-346-1796 Ext.: 1151

E. Bilingual Notice Requirements

This information **is required** for **new, major amendment, minor amendment or minor modification, and renewal** applications.

This section of the application is only used to determine if alternative language notices will be needed. Complete instructions on publishing the alternative language notices will be in your public notice package.

Please call the bilingual/ESL coordinator at the nearest elementary and middle schools and obtain the following information to determine whether an alternative language notices are required.

1. Is a bilingual education program required by the Texas Education Code at the elementary or middle school nearest to the facility or proposed facility?

   ☒ Yes ☐ No

   If **no**, publication of an alternative language notice is not required; **skip to** Section 9 below.

2. Are the students who attend either the elementary school or the middle school enrolled in a bilingual education program at that school?

   ☒ Yes ☐ No

3. Do the students at these schools attend a bilingual education program at another location?

   ☐ Yes ☒ No

4. Would the school be required to provide a bilingual education program but the school has waived out of this requirement under 19 TAC §89.1205(g)?

   ☐ Yes ☒ No

5. If the answer is **yes** to **question 1, 2, 3, or 4**, public notices in an alternative language are required. Which language is required by the bilingual program? Spanish

F. Summary of Application in Plain Language Template

Complete the F. Summary of Application in Plain Language Template (TCEQ Form 20972), also known as the plain language summary or PLS, and include as an attachment.

Attachment: Attachment L

G. Public Involvement Plan Form

Complete the Public Involvement Plan Form (TCEQ Form 20960) for each application for a **new permit or major amendment to a permit** and include as an attachment.

Attachment: N/A

Section 9. Regulated Entity and Permitted Site Information (Instructions Page 29)

A. If the site is currently regulated by TCEQ, provide the Regulated Entity Number (RN) issued to this site. **RN** 101920932

Search the TCEQ's Central Registry at http://www15.tceq.texas.gov/crpub/ to determine if the site is currently regulated by TCEQ.

B. Name of project or site (the name known by the community where located):

City of Fulshear Water Reclamation Facility

C. Owner of treatment facility: City of Fulshear

Ownership of Facility: ☒ Public ☐ Private ☐ Both ☐ Federal

D. Owner of land where treatment facility is or will be:

Prefix: Click to enter text. Last Name, First Name:

Title: Click to enter text. Credential: Click to enter text.

Organization Name: City of Fulshear

Mailing Address: P.O. Box 279 City, State, Zip Code: Fulshear, Texas 77441

Phone No.: 281-346-1796 E-mail Address: bglynn@fulsheartexas.gov

If the landowner is not the same person as the facility owner or co-applicant, attach a lease agreement or deed recorded easement. See instructions.

Attachment: Click to enter text.

E. Owner of effluent disposal site:

Prefix: NOT APPLICABLE Last Name, First Name: Click to enter text.

Title: Click to enter text. Credential: Click to enter text.

Organization Name: Click to enter text.

Mailing Address: Click to enter text. City, State, Zip Code: Click to enter text.

Phone No.: Click to enter text. E-mail Address: Click to enter text.

If the landowner is not the same person as the facility owner or co-applicant, attach a lease agreement or deed recorded easement. See instructions.

Attachment: Click to enter text.

F. Owner sewage sludge disposal site (if authorization is requested for sludge disposal on property owned or controlled by the applicant)::

Prefix: NOT APPLICABLE Last Name, First Name: Click to enter text.

Title: Click to enter text. Credential: Click to enter text.

Organization Name: Click to enter text.

Mailing Address: Click to enter text. City, State, Zip Code: Click to enter text.

Phone No.: Click to enter text. E-mail Address: Click to enter text.

If the landowner is not the same person as the facility owner or co-applicant, attach a lease agreement or deed recorded easement. See instructions.

Attachment: Click to enter text.

Section 10. TPDES Discharge Information (Instructions Page 31)

A. Is the wastewater treatment facility location in the existing permit accurate?

☒ Yes ☐ No

If **no, or a new permit application**, please give an accurate description:

Click to enter text.

B. Are the point(s) of discharge and the discharge route(s) in the existing permit correct?

☒ Yes ☐ No

If **no, or a new or amendment permit application**, provide an accurate description of the point of discharge and the discharge route to the nearest classified segment as defined in 30 TAC Chapter 307:

Click to enter text.

City nearest the outfall(s): City of Fulshear

County in which the outfalls(s) is/are located: Fort Bend

C. Is or will the treated wastewater discharge to a city, county, or state highway right-of-way, or a flood control district drainage ditch?

☐ Yes ☒ No

If **yes**, indicate by a check mark if:

☐ Authorization granted ☐ Authorization pending

For **new and amendment** applications, provide copies of letters that show proof of contact and the approval letter upon receipt.

Attachment: N/A

D. For all applications involving an average daily discharge of 5 MGD or more, provide the names of all counties located within 100 statute miles downstream of the point(s) of discharge: N/A

Section 11. TLAP Disposal Information (Instructions Page 32)

A. For TLAPs, is the location of the effluent disposal site in the existing permit accurate?

☐ Yes ☐ No

If **no, or a new or amendment permit application**, provide an accurate description of the disposal site location:

Click to enter text.

B. City nearest the disposal site: Click to enter text.

C. County in which the disposal site is located: Click to enter text.

D. For **TLAPs**, describe the routing of effluent from the treatment facility to the disposal site:

Click to enter text.

E. For **TLAPs**, please identify the nearest watercourse to the disposal site to which rainfall runoff might flow if not contained: Click to enter text.

Section 12. Miscellaneous Information (Instructions Page 32)

A. Is the facility located on or does the treated effluent cross American Indian Land?

☐ Yes ☒ No

B. If the existing permit contains an onsite sludge disposal authorization, is the location of the sewage sludge disposal site in the existing permit accurate?

☐ Yes ☐ No ☒ Not Applicable

If No, or if a new onsite sludge disposal authorization is being requested in this permit application, provide an accurate location description of the sewage sludge disposal site.

Click to enter text.

C. Did any person formerly employed by the TCEQ represent your company and get paid for service regarding this application?

☐ Yes ☒ No

If yes, list each person formerly employed by the TCEQ who represented your company and was paid for service regarding the application: Click to enter text.

D. Do you owe any fees to the TCEQ?

☐ Yes ☒ No

If **yes**, provide the following information:

Account number: Click to enter text.

Amount past due: Click to enter text.

E. Do you owe any penalties to the TCEQ?

☐ Yes ☒ No

If **yes**, please provide the following information:

Enforcement order number: Click to enter text.

Amount past due: Click to enter text.

Section 13. Attachments (Instructions Page 33)

Indicate which attachments are included with the Administrative Report. Check all that apply:

☐ Lease agreement or deed recorded easement, if the land where the treatment facility is located or the effluent disposal site are not owned by the applicant or co-applicant.

☒ Original full-size USGS Topographic Map with the following information:

- Applicant's property boundary
- Treatment facility boundary
- Labeled point of discharge for each discharge point (TPDES only)
- Highlighted discharge route for each discharge point (TPDES only)
- Onsite sewage sludge disposal site (if applicable)
- Effluent disposal site boundaries (TLAP only)
- New and future construction (if applicable)
- 1 mile radius information
- 3 miles downstream information (TPDES only)
- All ponds.

☐ Attachment 1 for Individuals as co-applicants

☐ Other Attachments. Please specify: Please see the "List of Attachments" following the Technical Report

Section 14. Signature Page (Instructions Page 34)

If co-applicants are necessary, each entity must submit an original, separate signature page.

Permit Number: 13314-001

Applicant: City of Fulshear

Certification:

I certify under penalty of law that this document and all attachments were prepared under my direction or supervision in accordance with a system designed to assure that qualified personnel properly gather and evaluate the information submitted. Based on my inquiry of the person or persons who manage the system, or those persons directly responsible for gathering the information, the information submitted is, to the best of my knowledge and belief, true, accurate, and complete. I am aware there are significant penalties for submitting false information, including the possibility of fine and imprisonment for knowing violations.

I further certify that I am authorized under 30 Texas Administrative Code § 305.44 to sign and submit this document, and can provide documentation in proof of such authorization upon request.

Signatory name (typed or printed): Mr. Don McCoy

Signatory title: Mayor

Signature: _____ Date: 1/28/2025

(Use blue ink)

Subscribed and Sworn to before me by the said Donald McCoy

on this 28th day of January, 2025.

My commission expires on the 21st day of March, 2028.

Notary Public

MARIELA RODRIGUEZ
Notary Public, State of Texas
Comm. Expires 03-21-2028
Notary ID 130589923

(SEAL)

Fort Bend
County, Texas

DOMESTIC WASTEWATER PERMIT APPLICATION

SUPPLEMENTAL PERMIT INFORMATION FORM (SPIF)

This form applies to TPDES permit applications only. Complete and attach the Supplemental Permit information Form (SPIF) (TCEQ Form 20971).

Attachment: Attachment B

WATER QUALITY PERMIT

PAYMENT SUBMITTAL FORM

Use this form to submit the Application Fee, if the mailing the payment.

- Complete items 1 through 5 below.
- Staple the check or money order in the space provided at the bottom of this document.
- **Do Not mail this form with the application form.**
- Do not mail this form to the same address as the application.
- Do not submit a copy of the application with this form as it could cause duplicate permit entries.

Mail this form and the check or money order to:

BY REGULAR U.S. MAIL

Texas Commission on Environmental Quality
Financial Administration Division
Cashier's Office, MC-214
P.O. Box 13088
Austin, Texas 78711-3088

BY OVERNIGHT/EXPRESS MAIL

Texas Commission on Environmental Quality
Financial Administration Division
Cashier's Office, MC-214
12100 Park 35 Circle
Austin, Texas 78753

Fee Code: WQP **Waste Permit No:** Click to enter text.

1. Check or Money Order Number: Click to enter text.
2. Check or Money Order Amount: Click to enter text.
3. Date of Check or Money Order: Click to enter text.
4. Name on Check or Money Order: Click to enter text.
5. APPLICATION INFORMATION

   Name of Project or Site: Click to enter text.

   Physical Address of Project or Site: Click to enter text.

   If the check is for more than one application, attach a list which includes the name of each Project or Site (RE) and Physical Address, exactly as provided on the application.

Staple Check or Money Order in This Space

ATTACHMENT 1

INDIVIDUAL INFORMATION

Section 1. Individual Information (Instructions Page 41)

Complete this attachment if the facility applicant or co-applicant is an individual. Make additional copies of this attachment if both are individuals.

Prefix (Mr., Ms., Miss): Click to enter text.

Full legal name (Last Name, First Name, Middle Initial): Click to enter text.

Driver's License or State Identification Number: Click to enter text.

Date of Birth: Click to enter text.

Mailing Address: Click to enter text.

City, State, and Zip Code: Click to enter text.

Phone Number: Click to enter text. Fax Number: Click to enter text.

E-mail Address: Click to enter text.

CN: Click to enter text.

For Commission Use Only:
Customer Number:
Regulated Entity Number:
Permit Number:

DOMESTIC WASTEWATER PERMIT APPLICATION CHECKLIST OF COMMON DEFICIENCIES

Below is a list of common deficiencies found during the administrative review of domestic wastewater permit applications. To ensure the timely processing of this application, please review the items below and indicate by checking Yes that each item is complete and in accordance applicable rules at 30 TAC Chapters 21, 281, and 305. If an item is not required this application, indicate by checking N/A where appropriate. Please do not submit the application until the items below have been addressed.

Core Data Form (TCEQ Form No. 10400) ☒ Yes
(Required for all application types. Must be completed in its entirety and signed. Note: Form may be signed by applicant representative.)

Correct and Current Industrial Wastewater Permit Application Forms ☒ Yes
(TCEQ Form Nos. 10053 and 10054. Version dated 6/25/2018 or later.)

Water Quality Permit Payment Submittal Form (Page 19) ☐ Yes
(Original payment sent to TCEQ Revenue Section. See instructions for mailing address.)

7.5 Minute USGS Quadrangle Topographic Map Attached ☒ Yes
(Full-size map if seeking "New" permit. 8 ½ x 11 acceptable for Renewals and Amendments)

Current/Non-Expired, Executed Lease Agreement or Easement ☒ N/A ☐ Yes

Landowners Map ☒ N/A ☐ Yes
(See instructions for landowner requirements)

Things to Know:

- All the items shown on the map must be labeled.
- The applicant's complete property boundaries must be delineated which includes boundaries of contiguous property owned by the applicant.
- The applicant cannot be its own adjacent landowner. You must identify the landowners immediately adjacent to their property, regardless of how far they are from the actual facility.
- If the applicant's property is adjacent to a road, creek, or stream, the landowners on the opposite side must be identified. Although the properties are not adjacent to applicant's property boundary, they are considered potentially affected landowners. If the adjacent road is a divided highway as identified on the USGS topographic map, the applicant does not have to identify the landowners on the opposite side of the highway.

Landowners Labels and Cross Reference List ☒ N/A ☐ Yes
(See instructions for landowner requirements)

Electronic Application Submittal ☒ Yes
(See application submittal requirements on page 23 of the instructions.)

Original signature per 30 TAC § 305.44 – Blue Ink Preferred ☒ Yes
(If signature page is not signed by an elected official or principle executive officer, a copy of signature authority/delegation letter must be attached)

Summary of Application (in Plain Language) ☒ Yes

ATTACHMENT B

SUPPLEMENTAL PERMIT INFORMATION FORM (SPIF)

TEXAS COMMISSION ON ENVIRONMENTAL QUALITY

SUPPLEMENTAL PERMIT INFORMATION FORM (SPIF)

FOR AGENCIES REVIEWING DOMESTIC OR INDUSTRIAL TPDES WASTEWATER PERMIT APPLICATIONS

TCEQ USE ONLY:

Application type: ____Renewal _____Major Amendment ____Minor Amendment _____New

County: _____ Segment Number: _____

Admin Complete Date: _____

Agency Receiving SPIF:

_____ Texas Historical Commission _____ U.S. Fish and Wildlife

_____ Texas Parks and Wildlife Department _____ U.S. Army Corps of Engineers

This form applies to TPDES permit applications only. (Instructions, Page 53)

Complete this form as a separate document. TCEQ will mail a copy to each agency as required by our agreement with EPA. If any of the items are not completely addressed or further information is needed, we will contact you to provide the information before issuing the permit. Address each item completely.

Do not refer to your response to any item in the permit application form. Provide each attachment for this form separately from the Administrative Report of the application. The application will not be declared administratively complete without this SPIF form being completed in its entirety including all attachments. Questions or comments concerning this form may be directed to the Water Quality Division's Application Review and Processing Team by email at WQ-ARPTeam@tceq.texas.gov or by phone at (512) 239-4671.

The following applies to all applications:

1. Permittee: City of Fulshear

   Permit No. WQ00 13314001 EPA ID No. TX 0101052

   Address of the project (or a location description that includes street/highway, city/vicinity, and county):

   30618 F.M. Highway 1093, Fulshear, Texas 77441

Provide the name, address, phone and fax number of an individual that can be contacted to answer specific questions about the property.

Prefix (Mr., Ms., Miss): Mr.

First and Last Name: Ben Glynn

Credential (P.E, P.G., Ph.D., etc.):

Title: Utilities Director

Mailing Address: 6611 W Cross Creek Bend Lane

City, State, Zip Code: Fulshear, Texas 77441

Phone No.: 281-346-1796 Ext.: 5002 Fax No.:

E-mail Address: bglynn@fulsheartexas.gov

2. List the county in which the facility is located: Fort Bend
3. If the property is publicly owned and the owner is different than the permittee/applicant, please list the owner of the property.

N/A

4. Provide a description of the effluent discharge route. The discharge route must follow the flow of effluent from the point of discharge to the nearest major watercourse (from the point of discharge to a classified segment as defined in 30 TAC Chapter 307). If known, please identify the classified segment number.

From the Water Reclamation Facility to an unnamed tributary (locally known as Union Chapel Branch), thence to Bessies Creek, thence to Brazos River below Navasota River in Segment No. 1202 of the Brazos River Basin

5. Please provide a separate 7.5-minute USGS quadrangle map with the project boundaries plotted and a general location map showing the project area. Please highlight the discharge route from the point of discharge for a distance of one mile downstream. (This map is required in addition to the map in the administrative report).

Provide original photographs of any structures 50 years or older on the property.

Does your project involve any of the following? Check all that apply.

- ☒ Proposed access roads, utility lines, construction easements
- ☐ Visual effects that could damage or detract from a historic property's integrity
- ☐ Vibration effects during construction or as a result of project design
- ☐ Additional phases of development that are planned for the future
- ☐ Sealing caves, fractures, sinkholes, other karst features

☐ Disturbance of vegetation or wetlands

1. List proposed construction impact (surface acres to be impacted, depth of excavation, sealing of caves, or other karst features):

   Minimal surface disturbance of approximately 0.52 acres

2. Describe existing disturbances, vegetation, and land use:

   Existing wastewater treatment plant structures. Vegetation is grass that is moved regularly.

THE FOLLOWING ITEMS APPLY ONLY TO APPLICATIONS FOR NEW TPDES PERMITS AND MAJOR AMENDMENTS TO TPDES PERMITS

3. List construction dates of all buildings and structures on the property:

4. Provide a brief history of the property, and name of the architect/builder, if known.

ATTACHMENT C

SPIF REQURED USGS MAP

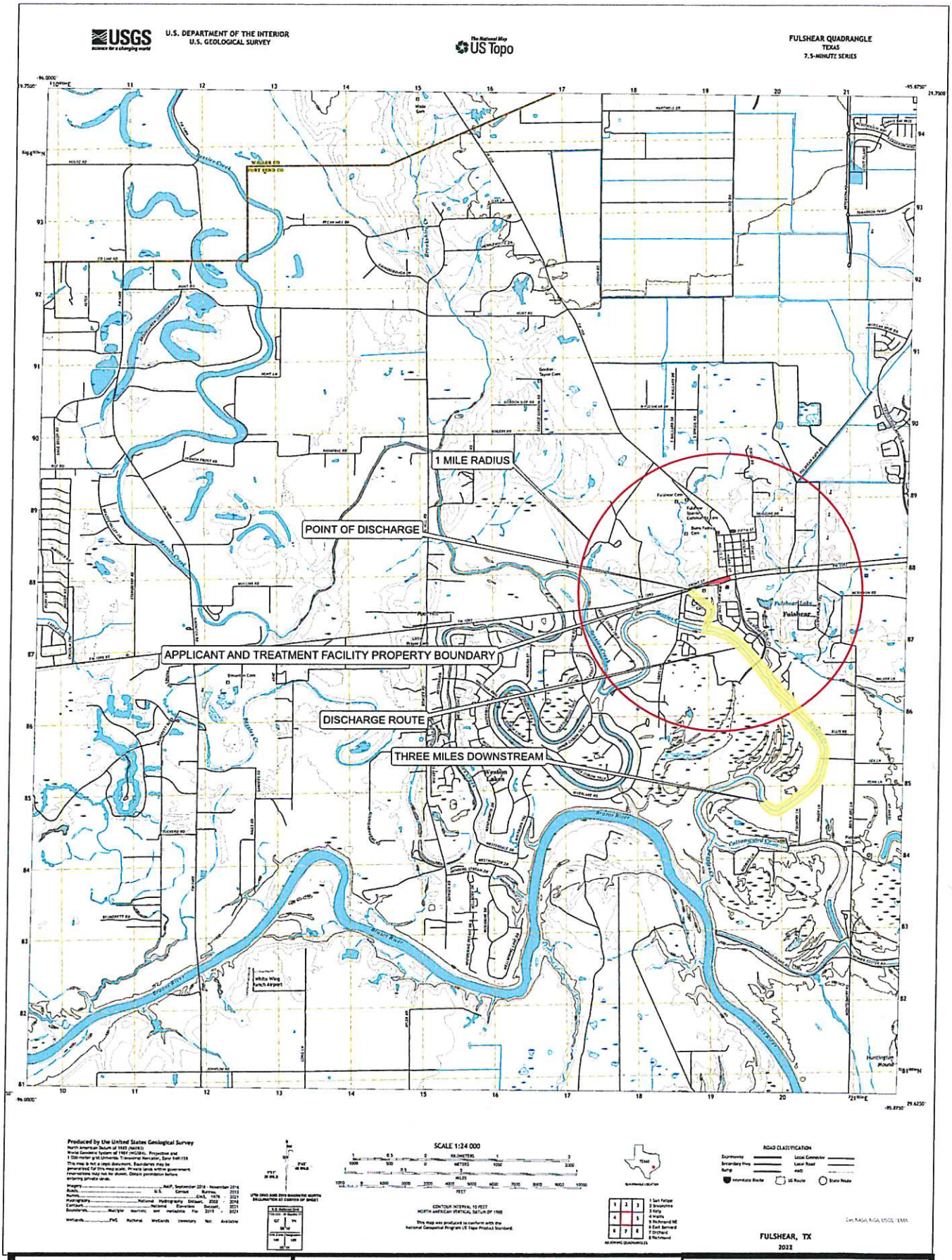

Kimley»Horn

CITY OF FULSHEAR
WATER RELCMATION FACILITY
PERMIT RENEWAL
ORIGINAL USGS MAP

DATE: JANUARY 2025
DESIGN: RED
DRAWN: REC
CHECKED: RED
KHA NO: 067794907

ATTACHMENT D.

TCEQ CORE DATA FORM

TCEQ Use Only

TCEQ Core Data Form

For detailed instructions on completing this form, please read the Core Data Form Instructions or call 512-239-5175.

SECTION I: General Information

1. Reason for Submission *(If other is checked please describe in space provided.)*

☐ New Permit, Registration or Authorization *(Core Data Form should be submitted with the program application.)*

☒ Renewal *(Core Data Form should be submitted with the renewal form)* ☐ Other

2. Customer Reference Number *(if issued)*	Follow this link to search for CN or RN numbers in Central Registry**	3. Regulated Entity Reference Number *(if issued)*
CN 600700066		RN 101920932

SECTION II: Customer Information

4. General Customer Information	5. Effective Date for Customer Information Updates (mm/dd/yyyy)	1/21/2025

☐ New Customer ☒ Update to Customer Information ☐ Change in Regulated Entity Ownership
☐ Change in Legal Name (Verifiable with the Texas Secretary of State or Texas Comptroller of Public Accounts)

The Customer Name submitted here may be updated automatically based on what is current and active with the Texas Secretary of State (SOS) or Texas Comptroller of Public Accounts (CPA).

6. Customer Legal Name *(If an individual, print last name first: eg: Doe, John)*	*If new Customer, enter previous Customer below:*
CITY OF FULSHEAR	

7. TX SOS/CPA Filing Number	8. TX State Tax ID (11 digits)	9. Federal Tax ID (9 digits)	10. DUNS Number *(if applicable)*
N/A	17421548821	74-2154882	JP55LBJXGT3

11. Type of Customer: ☐ Corporation ☐ Individual Partnership: ☐ General ☐ Limited

Government: ☒ City ☐ County ☐ Federal ☐ Local ☐ State ☐ Other ☐ Sole Proprietorship ☐ Other:

12. Number of Employees

☐ 0-20 ☒ 21-100 ☐ 101-250 ☐ 251-500 ☐ 501 and higher

13. Independently Owned and Operated?

☒ Yes ☐ No

14. Customer Role (Proposed or Actual) – *as it relates to the Regulated Entity listed on this form. Please check one of the following*

☒ Owner ☐ Operator ☐ Owner & Operator ☐ Other:
☐ Occupational Licensee ☐ Responsible Party ☐ VCP/BSA Applicant

15. Mailing Address:	CITY OF FULSHEAR							
	P.O. BOX 279							
	City	FULSHEAR	State	TX	ZIP	77441	ZIP + 4	0279

16. Country Mailing Information *(if outside USA)*	17. E-Mail Address *(if applicable)*

18. Telephone Number	19. Extension or Code	20. Fax Number *(if applicable)*

(281) 346-1796		(281) 346-8864

SECTION III: Regulated Entity Information

21. General Regulated Entity Information *(If 'New Regulated Entity" is selected, a new permit application is also required.)*

☐ New Regulated Entity ☐ Update to Regulated Entity Name ☒ Update to Regulated Entity Information

The Regulated Entity Name submitted may be updated, in order to meet TCEQ Core Data Standards (removal of organizational endings such as Inc, LP, or LLC).

22. Regulated Entity Name *(Enter name of the site where the regulated action is taking place.)*

CITY OF FULSHEAR WATER RECLAMATION FACILITY

23. Street Address of the Regulated Entity: ***(No PO Boxes)***	CITY OF FULSHEAR							
	30618 F.M. 1093							
	City	FULSHEAR	**State**	TX	**ZIP**	77441	**ZIP + 4**	
24. County	FORT BEND							

If no Street Address is provided, fields 25-28 are required.

25. Description to Physical Location:					
26. Nearest City			**State**	**Nearest ZIP Code**	
FULSHEAR			TX	77441	

Latitude/Longitude are required and may be added/updated to meet TCEQ Core Data Standards. (Geocoding of the Physical Address may be used to supply coordinates where none have been provided or to gain accuracy).

27. Latitude (N) In Decimal:			**28. Longitude (W) In Decimal:**		
Degrees	Minutes	Seconds	Degrees	Minutes	Seconds
29	41	20	95	54	08

29. Primary SIC Code (4 digits)	**30. Secondary SIC Code** (4 digits)	**31. Primary NAICS Code** (5 or 6 digits)	**32. Secondary NAICS Code** (5 or 6 digits)
4952	N/A	22132	N/A

33. What is the Primary Business of this entity? *(Do not repeat the SIC or NAICS description.)*

MUNICIPAL W.W. TREATMENT OF SAN. SEWAGE

34. Mailing Address:	CITY OF FULSHEAR							
	P.O. BOX 279							
	City	FULSHEAR	**State**	TX	**ZIP**	77441	**ZIP + 4**	279
35. E-Mail Address:	XX							

36. Telephone Number	**37. Extension or Code**	**38. Fax Number** *(if applicable)*
(281) 346-1796		(281) 346-8864

39. TCEQ Programs and ID Numbers Check all Programs and write in the permits/registration numbers that will be affected by the updates submitted on this form. See the Core Data Form instructions for additional guidance.

☐ Dam Safety	☐ Districts	☐ Edwards Aquifer	☐ Emissions Inventory Air	☐ Industrial Hazardous Waste
☐ Municipal Solid Waste	☐ New Source Review Air	☐ OSSF	☐ Petroleum Storage Tank	☐ PWS
☐ Sludge	☐ Storm Water	☐ Title V Air	☐ Tires	☐ Used Oil
☐ Voluntary Cleanup	☒ Wastewater	☐ Wastewater Agriculture	☐ Water Rights	☐ Other:

SECTION IV: Preparer Information

40. Name:	Raul Dominguez	**41. Title:**	Professional Engineer

42. Telephone Number	**43. Ext./Code**	**44. Fax Number**	**45. E-Mail Address**
(346) 493-8113		( ) -	raul.dominguez@kimley-horn.com

SECTION V: Authorized Signature

46. By my signature below, I certify, to the best of my knowledge, that the information provided in this form is true and complete, and that I have signature authority to submit this form on behalf of the entity specified in Section II, Field 6 and/or as required for the updates to the ID numbers identified in field 39.

Company:	City of Fulshear	**Job Title:**	Mayor		
Name *(In Print):*	Don McCoy			**Phone:**	(281) 346- 1796
Signature:				**Date:**	1/28/2025

ATTACHMENT E.

DOMESTIC TECHNICAL REPORT 1.0

TEXAS COMMISSION ON ENVIRONMENTAL QUALITY

DOMESTIC WASTEWATER PERMIT APPLICATION TECHNICAL REPORT 1.0

For any questions about this form, please contact the Domestic Wastewater Permitting Team at 512-239-4671.

The following information is required for all renewal, new, and amendment applications.

Section 1. Permitted or Proposed Flows (Instructions Page 42)

A. Existing/Interim I Phase

Design Flow (MGD): 0.50

2-Hr Peak Flow (MGD): 1.50

Estimated construction start date:

Estimated waste disposal start date:

B. Interim II Phase

Design Flow (MGD): 070

2-Hr Peak Flow (MGD): 2.10

Estimated construction start date: Existing

Estimated waste disposal start date: Existing

C. Final Phase

Design Flow (MGD): 1.10

2-Hr Peak Flow (MGD): 3.30

Estimated construction start date: June 2025

Estimated waste disposal start date: August 2026

D. Current Operating Phase

Provide the startup date of the facility: Existing Interim II Phase November 2022 Startup

Section 2. Treatment Process (Instructions Page 42)

A. Current Operating Phase

Provide a detailed description of the treatment process. **Include the type of treatment plant, mode of operation, and all treatment units.** Start with the plant's head works and

finish with the point of discharge. Include all sludge processing and drying units. **If more than one phase exists or is proposed, a description of *each phase* must be provided.**

Process: Complete mix activated sludge

Interim I Phase: Bar Screen (1); Aeration Basins (5); Final Clarifiers (3); Aeration Digesters (5); Chlorine Contact (1).

Existing Interim II Phase: Bar Screen (1); Aeration Basins (7); Final Clarifiers (3); Aerobic Digesters (7); Chlorine Contact (1).

Final Phase: Splitter Box (1); Bar Screen (1); Aeration Basins (11); Final Clarifiers (5); Aerobic Digesters (11), Chlorine Contact (1); Dechlorination Basin (1).

All Phases: Outfall pipe (1).

B. Treatment Units

In Table 1.0(1), provide the treatment unit type, the number of units, and dimensions (length, width, depth) **of each treatment unit, accounting for *all* phases of operation.**

Table 1.0(1) - Treatment Units

Treatment Unit Type Interim I Phase	Number of Units Interim I Phase	Dimensions (L x W x D) Interim I Phase
Aeration Basin	1 4	24' x 21' x 12' 40' x 12' x 10.5'
Final Clarifier	1 2	22'dia x 10' 36' dia x 12'
Chlorine Contact	1	42' x 12' x 10.5'
Aerobic Digester	1 4	21' x 12' x 12.5' 24' x 12' x 10.5'
Treatment Unit Type Existing Interim II Phase	**Number of Units Existing Interim II Phase**	**Dimensions (L x W x D) Existing Interim II Phase**
Aeration Basin	1 6	24' x 21' x 12' 40' x 12' x 10.5'
Final Clarifier	1 2	22' dia x 10' 36' dia x 12'
Chlorine Contact	1	42' x 12' x 10.5'
Aerobic Digester	1 6	21' x 12' x 12.5' 24' x 12' x 10.5'

Treatment Unit Type Final Phase	Number of Units Final Phase	Dimensions (L x W x D) Final Phase
Aeration Basin	1 10	24' x 21' x 12' 40' x 12' x 10.5'
Final Clarifier	1 2 2	22' dia x 10' 36' dia x 12' 32' dia x 12'
Chlorine Contact	1	42' x 12' x 10.5'
Aerobic Digester	1 10	21' x 12' x 12.5' 24' x 12' x 10.5'
Dechlorination	1	6' x 6' x 6'

C. Process Flow Diagram

Provide flow diagrams for the existing facilities and **each** proposed phase of construction.

Attachment: M

Section 3. Site Information and Drawing (Instructions Page 43)

Provide the TPDES discharge outfall latitude and longitude. Enter N/A if not applicable.

- Latitude: 29 41' 17"
- Longitude: 95 54' 23"

Provide the TLAP disposal site latitude and longitude. Enter N/A if not applicable.

- Latitude: N/A
- Longitude: N/A

Provide a site drawing for the facility that shows the following:

- The boundaries of the treatment facility;
- The boundaries of the area served by the treatment facility;
- If land disposal of effluent, the boundaries of the disposal site and all storage/holding ponds; and
- If sludge disposal is authorized in the permit, the boundaries of the land application or disposal site.

Attachment: N

Provide the name **and** a description of the area served by the treatment facility.

CITY LIMITS OF THE CITY OF FULSHEAR WEST OF TIGER LANE

Collection System Information **for wastewater TPDES permits only**: Provide information for each **uniquely owned** collection system, existing and new, served by this facility, including satellite collection systems. **Please see the instructions for a detailed explanation and examples.**

Collection System Information

Collection System Name	Owner Name	Owner Type	Population Served
Downtown Area Collection System	City of Fulshear	**Publicly Owned**	15,000
		Choose an item.	
		Choose an item.	
		Choose an item.	

Section 4. Unbuilt Phases (Instructions Page 44)

Is the application for a renewal of a permit that contains an unbuilt phase or phases?

☒ Yes ☐ No

If yes, does the existing permit contain a phase that has not been constructed **within five years** of being authorized by the TCEQ?

☐ Yes ☒ No

If yes, provide a detailed discussion regarding the continued need for the unbuilt phase. **Failure to provide sufficient justification may result in the Executive Director recommending denial of the unbuilt phase or phases.**

N/A

Section 5. Closure Plans (Instructions Page 44)

Have any treatment units been taken out of service permanently, or will any units be taken out of service in the next five years?

☐ Yes ☒ No

If yes, was a closure plan submitted to the TCEQ?

☐ Yes ☐ No

If yes, provide a brief description of the closure and the date of plan approval.

Click to enter text.

Section 6. Permit Specific Requirements (Instructions Page 44)

For applicants with an existing permit, check the Other Requirements or Special Provisions of the permit.

A. Summary transmittal

Have plans and specifications been approved for the existing facilities and each proposed phase?

☐ Yes ☒ No

If yes, provide the date(s) of approval for each phase: Click to enter text.

Provide information, including dates, on any actions taken to meet a *requirement or provision* pertaining to the submission of a summary transmittal letter. **Provide a copy of an approval letter from the TCEQ, if applicable.**

N/A

B. Buffer zones

Have the buffer zone requirements been met?

☒ Yes ☐ No

Provide information below, including dates, on any actions taken to meet the conditions of the buffer zone. If available, provide any new documentation relevant to maintaining the buffer zones.

Applicant owns the property in which the majority of the buffer zone falls. The remaining portion of the buffer zone falls on the highway right of way.

C. Other actions required by the current permit

Does the *Other Requirements* or *Special Provisions* section in the existing permit require submission of any other information or other required actions? Examples include Notification of Completion, progress reports, soil monitoring data, etc.

☐ Yes ☒ No

If yes, provide information below on the status of any actions taken to meet the conditions of an *Other Requirement* or *Special Provision.*

Click to enter text.

D. Grit and grease treatment

1. *Acceptance of grit and grease waste*

Does the facility have a grit and/or grease processing facility onsite that treats and decants or accepts transported loads of grit and grease waste that are discharged directly to the wastewater treatment plant prior to any treatment?

☐ Yes ☒ No

If No, stop here and continue with Subsection E. Stormwater Management.

2. *Grit and grease processing*

Describe below how the grit and grease waste is treated at the facility. In your description, include how and where the grit and grease is introduced to the treatment works and how it is separated or processed. Provide a flow diagram showing how grit and grease is processed at the facility.

Click to enter text.

3. *Grit disposal*

Does the facility have a Municipal Solid Waste (MSW) registration or permit for grit disposal?

☐ Yes ☒ No

If No, contact the TCEQ Municipal Solid Waste team at 512-239-2335. Note: A registration or permit is required for grit disposal. Grit shall not be combined with treatment plant sludge. See the instruction booklet for additional information on grit disposal requirements and restrictions.

Describe the method of grit disposal.

Click to enter text.

4. ***Grease and decanted liquid disposal***

Note: A registration or permit is required for grease disposal. Grease shall not be combined with treatment plant sludge. For more information, contact the TCEQ Municipal Solid Waste team at 512-239-2335.

Describe how the decant and grease are treated and disposed of after grit separation.

Click to enter text.

E. Stormwater management

1. ***Applicability***

Does the facility have a design flow of 1.0 MGD or greater in any phase?

☒ Yes ☐ No

Does the facility have an approved pretreatment program, under 40 CFR Part 403?

☐ Yes ☒ No

If no to both of the above, then skip to Subsection F, Other Wastes Received.

2. ***MSGP coverage***

Is the stormwater runoff from the WWTP and dedicated lands for sewage disposal currently permitted under the TPDES Multi-Sector General Permit (MSGP), TXR050000?

☐ Yes ☒ No

If yes, please provide MSGP Authorization Number and skip to Subsection F, Other Wastes Received:

TXR05 Click to enter text. or TXRNE Click to enter text.

If no, do you intend to seek coverage under TXR050000?

☒ Yes ☐ No

3. ***Conditional exclusion***

Alternatively, do you intend to apply for a conditional exclusion from permitting based TXR050000 (Multi Sector General Permit) Part II B.2 or TXR050000 (Multi Sector General Permit) Part V, Sector T 3(b)?

☐ Yes ☒ No

If yes, please explain below then proceed to Subsection F, Other Wastes Received:

Click to enter text.

4. ***Existing coverage in individual permit***

Is your stormwater discharge currently permitted through this individual TPDES or TLAP permit?

☐ Yes ☒ No

If yes, provide a description of stormwater runoff management practices at the site that are authorized in the wastewater permit then skip to Subsection F, Other Wastes Received.

Click to enter text.

5. ***Zero stormwater discharge***

Do you intend to have no discharge of stormwater via use of evaporation or other means?

☐ Yes ☒ No

If yes, explain below then skip to Subsection F. Other Wastes Received.

Click to enter text.

Note: If there is a potential to discharge any stormwater to surface water in the state as the result of any storm event, then permit coverage is required under the MSGP or an individual discharge permit. This requirement applies to all areas of facilities with treatment plants or systems that treat, store, recycle, or reclaim domestic sewage, wastewater or sewage sludge (including dedicated lands for sewage sludge disposal located within the onsite property boundaries) that meet the applicability criteria of above. You have the option of obtaining coverage under the MSGP for direct discharges, (recommended), or obtaining coverage under this individual permit.

6. ***Request for coverage in individual permit***

Are you requesting coverage of stormwater discharges associated with your treatment plant under this individual permit?

☐ Yes ☒ No

If yes, provide a description of stormwater runoff management practices at the site for which you are requesting authorization in this individual wastewater permit and describe whether you intend to comingle this discharge with your treated effluent or discharge it via a separate dedicated stormwater outfall. Please also indicate if you

intend to divert stormwater to the treatment plant headworks and indirectly discharge it to water in the state.

Click to enter text.

Note: Direct stormwater discharges to waters in the state authorized through this individual permit will require the development and implementation of a stormwater pollution prevention plan (SWPPP) and will be subject to additional monitoring and reporting requirements. Indirect discharges of stormwater via headworks recycling will require compliance with all individual permit requirements including 2-hour peak flow limitations. All stormwater discharge authorization requests will require additional information during the technical review of your application.

F. Discharges to the Lake Houston Watershed

Does the facility discharge in the Lake Houston watershed?

☐ Yes ☒ No

If yes, attach a Sewage Sludge Solids Management Plan. See Example 5 in the instructions.
Click to enter text.

G. Other wastes received including sludge from other WWTPs and septic waste

1. *Acceptance of sludge from other WWTPs*

Does or will the facility accept sludge from other treatment plants at the facility site?

☐ Yes ☒ No

If yes, attach sewage sludge solids management plan. See Example 5 of instructions.

In addition, provide the date the plant started or is anticipated to start accepting sludge, an estimate of monthly sludge acceptance (gallons or millions of gallons), an estimate of the BOD_5 concentration of the sludge, and the design BOD_5 concentration of the influent from the collection system. Also note if this information has or has not changed since the last permit action.

Click to enter text.

Note: Permits that accept sludge from other wastewater treatment plants may be required to have influent flow and organic loading monitoring.

2. *Acceptance of septic waste*

Is the facility accepting or will it accept septic waste?

☐ Yes ☒ No

If yes, does the facility have a Type V processing unit?

☐ Yes ☒ No

If yes, does the unit have a Municipal Solid Waste permit?

☐ Yes ☒ No

If yes to any of the above, provide the date the plant started or is anticipated to start accepting septic waste, an estimate of monthly septic waste acceptance (gallons or millions of gallons), an estimate of the BOD_5 concentration of the septic waste, and the design BOD_5 concentration of the influent from the collection system. Also note if this information has or has not changed since the last permit action.

Click to enter text.

Note: Permits that accept sludge from other wastewater treatment plants may be required to have influent flow and organic loading monitoring.

3. ***Acceptance of other wastes (not including septic, grease, grit, or RCRA, CERCLA or as discharged by IUs listed in Worksheet 6)***

Is or will the facility accept wastes that are not domestic in nature excluding the categories listed above?

☐ Yes ☒ No

If yes, provide the date that the plant started accepting the waste, an estimate how much waste is accepted on a monthly basis (gallons or millions of gallons), a description of the entities generating the waste, and any distinguishing chemical or other physical characteristic of the waste. Also note if this information has or has not changed since the last permit action.

Click to enter text.

Section 7. Pollutant Analysis of Treated Effluent (Instructions Page 49)

Is the facility in operation?

☒ Yes ☐ No

If no, this section is not applicable. Proceed to Section 8.

If yes, provide effluent analysis data for the listed pollutants. ***Wastewater treatment facilities*** complete Table 1.0(2). ***Water treatment facilities*** discharging filter backwash water, complete Table 1.0(3). Provide copies of the laboratory results sheets. **These tables are not applicable for a minor amendment without renewal.** See the instructions for guidance.

Note: The sample date must be within 1 year of application submission.

Table1.0(2) – Pollutant Analysis for Wastewater Treatment Facilities

Pollutant	Average Conc.	Max Conc.	No. of Samples	Sample Type	Sample Date/Time
$CBOD_5$, mg/l					
Total Suspended Solids, mg/l					
Ammonia Nitrogen, mg/l					
Nitrate Nitrogen, mg/l					
Total Kjeldahl Nitrogen, mg/l					
Sulfate, mg/l					
Chloride, mg/l					
Total Phosphorus, mg/l					
pH, standard units					
Dissolved Oxygen*, mg/l					
Chlorine Residual, mg/l					
E.coli (CFU/100ml) freshwater					
Entercocci (CFU/100ml) saltwater					
Total Dissolved Solids, mg/l					
Electrical Conductivity, µmohs/cm, †					
Oil & Grease, mg/l					
Alkalinity ($CaCO_3$)*, mg/l					

*TPDES permits only
†TLAP permits only

Table1.0(3) – Pollutant Analysis for Water Treatment Facilities

Pollutant	Average Conc.	Max Conc.	No. of Samples	Sample Type	Sample Date/Time
Total Suspended Solids, mg/l					
Total Dissolved Solids, mg/l					
pH, standard units					
Fluoride, mg/l					
Aluminum, mg/l					
Alkalinity ($CaCO_3$), mg/l					

Section 8. Facility Operator (Instructions Page 49)

Facility Operator Name: Roel Garcia, Inframark Operations Manager

Facility Operator's License Classification and Level: Wastewater Treatment Operator-B

Facility Operator's License Number: WW0047772

Section 9. Sludge and Biosolids Management and Disposal (Instructions Page 50)

A. WWTP's Sewage Sludge or Biosolids Management Facility Type

Check all that apply. See instructions for guidance

- ☒ Design flow>= 1 MGD
- ☒ Serves >= 10,000 people
- ☐ Class I Sludge Management Facility (per 40 CFR § 503.9)
- ☐ Biosolids generator
- ☐ Biosolids end user – land application (onsite)
- ☐ Biosolids end user – surface disposal (onsite)
- ☐ Biosolids end user – incinerator (onsite)

B. WWTP's Sewage Sludge or Biosolids Treatment Process

Check all that apply. See instructions for guidance.

- ☒ Aerobic Digestion
- ☐ Air Drying (or sludge drying beds)
- ☐ Lower Temperature Composting
- ☐ Lime Stabilization
- ☐ Higher Temperature Composting
- ☐ Heat Drying
- ☐ Thermophilic Aerobic Digestion
- ☐ Beta Ray Irradiation
- ☐ Gamma Ray Irradiation
- ☐ Pasteurization
- ☐ Preliminary Operation (e.g. grinding, de-gritting, blending)
- ☐ Thickening (e.g. gravity thickening, centrifugation, filter press, vacuum filter)
- ☐ Sludge Lagoon
- ☐ Temporary Storage (< 2 years)
- ☐ Long Term Storage (>= 2 years)
- ☐ Methane or Biogas Recovery
- ☐ Other Treatment Process: Click to enter text.

C. Sewage Sludge or Biosolids Management

Provide information on the *intended* sewage sludge or biosolids management practice. Do not enter every management practice that you want authorized in the permit, as the

permit will authorize all sewage sludge or biosolids management practices listed in the instructions. Rather indicate the management practice the facility plans to use.

Biosolids Management

Management Practice	Handler or Preparer Type	Bulk or Bag Container	Amount (dry metric tons)	Pathogen Reduction Options	Vector Attraction Reduction Option
Disposal in Landfill	Off-site Third-Party Handler or Preparer	Bulk	207 Dry tons per year	Class B: PSRP Aerobic Digestion	Option 5: Aerobic process for 14 days at >40C
Choose an item.	Choose an item.	Choose an item.		Choose an item.	Choose an item.
Choose an item.	Choose an item.	Choose an item.		Choose an item.	Choose an item.

If "Other" is selected for Management Practice, please explain (e.g. monofill or transport to another WWTP): N/A

D. Disposal site

Disposal site name: (1) Larry Jeffies Property. (2) J.H. Caldwell Property

TCEQ permit or registration number: (1) 04454. (2) 04465

County where disposal site is located: (1) Brazoria County. (2) Brazoria County

E. Transportation method

Method of transportation (truck, train, pipe, other): Truck

Name of the hauler: Magna Flow Environmental

Hauler registration number: 21484

Sludge is transported as a:

Liquid ☐ semi-liquid ☒ semi-solid ☐ solid ☐

Section 10. Permit Authorization for Sewage Sludge Disposal (Instructions Page 52)

A. Beneficial use authorization

Does the existing permit include authorization for land application of biosolids for beneficial use?

☐ Yes ☒ No

If yes, are you requesting to continue this authorization to land apply biosolids for beneficial use?

☐ Yes ☐ No

If yes, is the completed **Application for Permit for Beneficial Land Use of Sewage Sludge (TCEQ Form No. 10451)** attached to this permit application (see the instructions for details)?

☐ Yes ☐ No

B. Sludge processing authorization

Does the existing permit include authorization for any of the following sludge processing, storage or disposal options?

Sludge Composting	☐ Yes	☒ No
Marketing and Distribution of Biosolids	☐ Yes	☒ No
Sludge Surface Disposal or Sludge Monofill	☐ Yes	☒ No
Temporary storage in sludge lagoons	☐ Yes	☒ No

If yes to any of the above sludge options and the applicant is requesting to continue this authorization, is the completed **Domestic Wastewater Permit Application: Sewage Sludge Technical Report (TCEQ Form No. 10056)** attached to this permit application?

☐ Yes ☐ No

Section 11. Sewage Sludge Lagoons (Instructions Page 53)

Does this facility include sewage sludge lagoons?

☐ Yes ☒ No

If yes, complete the remainder of this section. If no, proceed to Section 12.

A. Location information

The following maps are required to be submitted as part of the application. For each map, provide the Attachment Number.

- Original General Highway (County) Map:

  Attachment: Click to enter text.
- USDA Natural Resources Conservation Service Soil Map:

  Attachment: Click to enter text.
- Federal Emergency Management Map:

  Attachment: Click to enter text.
- Site map:

  Attachment: Click to enter text.

Discuss in a description if any of the following exist within the lagoon area. Check all that apply.

☐ Overlap a designated 100-year frequency flood plain

☐ Soils with flooding classification

☐ Overlap an unstable area

☐ Wetlands

☐ Located less than 60 meters from a fault

☐ None of the above

Attachment: Click to enter text.

If a portion of the lagoon(s) is located within the 100-year frequency flood plain, provide the protective measures to be utilized including type and size of protective structures:

Click to enter text.

B. Temporary storage information

Provide the results for the pollutant screening of sludge lagoons. These results are in addition to pollutant results in *Section 7 of Technical Report 1.0.*

Nitrate Nitrogen, mg/kg: Click to enter text.

Total Kjeldahl Nitrogen, mg/kg: Click to enter text.

Total Nitrogen (=nitrate nitrogen + TKN), mg/kg: Click to enter text.

Phosphorus, mg/kg: Click to enter text.

Potassium, mg/kg: Click to enter text.

pH, standard units: Click to enter text.

Ammonia Nitrogen mg/kg: Click to enter text.

Arsenic: Click to enter text.

Cadmium: Click to enter text.

Chromium: Click to enter text.

Copper: Click to enter text.

Lead: Click to enter text.

Mercury: Click to enter text.

Molybdenum: Click to enter text.

Nickel: Click to enter text.

Selenium: Click to enter text.

Zinc: Click to enter text.

Total PCBs: Click to enter text.

Provide the following information:

Volume and frequency of sludge to the lagoon(s): Click to enter text.

Total dry tons stored in the lagoons(s) per 365-day period: Click to enter text.

Total dry tons stored in the lagoons(s) over the life of the unit: Click to enter text.

C. Liner information

Does the active/proposed sludge lagoon(s) have a liner with a maximum hydraulic conductivity of $1x10^{-7}$ cm/sec?

☐ Yes ☐ No

If yes, describe the liner below. Please note that a liner is required.

Click to enter text.

D. Site development plan

Provide a detailed description of the methods used to deposit sludge in the lagoon(s):

Click to enter text.

Attach the following documents to the application.

- Plan view and cross-section of the sludge lagoon(s)

  Attachment: Click to enter text.
- Copy of the closure plan

  Attachment: Click to enter text.
- Copy of deed recordation for the site

  Attachment: Click to enter text.
- Size of the sludge lagoon(s) in surface acres and capacity in cubic feet and gallons

  Attachment: Click to enter text.
- Description of the method of controlling infiltration of groundwater and surface water from entering the site

  Attachment: Click to enter text.
- Procedures to prevent the occurrence of nuisance conditions

  Attachment: Click to enter text.

E. Groundwater monitoring

Is groundwater monitoring currently conducted at this site, or are any wells available for groundwater monitoring, or are groundwater monitoring data otherwise available for the sludge lagoon(s)?

☐ Yes ☐ No

If groundwater monitoring data are available, provide a copy. Provide a profile of soil types encountered down to the groundwater table and the depth to the shallowest groundwater as a separate attachment.

Attachment: Click to enter text.

Section 12. Authorizations/Compliance/Enforcement (Instructions Page 54)

A. Additional authorizations

Does the permittee have additional authorizations for this facility, such as reuse authorization, sludge permit, etc?

☐ Yes ☒ No

If yes, provide the TCEQ authorization number and description of the authorization:

Click to enter text.

B. Permittee enforcement status

Is the permittee currently under enforcement for this facility?

☐ Yes ☒ No

Is the permittee required to meet an implementation schedule for compliance or enforcement?

☐ Yes ☒ No

If yes to either question, provide a brief summary of the enforcement, the implementation schedule, and the current status:

Click to enter text.

Section 13. RCRA/CERCLA Wastes (Instructions Page 55)

A. RCRA hazardous wastes

Has the facility received in the past three years, does it currently receive, or will it receive RCRA hazardous waste?

☐ Yes ☒ No

B. Remediation activity wastewater

Has the facility received in the past three years, does it currently receive, or will it receive CERCLA wastewater, RCRA remediation/corrective action wastewater or other remediation activity wastewater?

☐ Yes ☒ No

C. Details about wastes received

If yes to either Subsection A or B above, provide detailed information concerning these wastes with the application.

Attachment: Click to enter text.

Section 14. Laboratory Accreditation (Instructions Page 55)

All laboratory tests performed must meet the requirements of *30 TAC Chapter 25, Environmental Testing Laboratory Accreditation and Certification*, which includes the following general exemptions from National Environmental Laboratory Accreditation Program (NELAP) certification requirements:

- The laboratory is an in-house laboratory and is:
  - periodically inspected by the TCEQ; or
  - located in another state and is accredited or inspected by that state; or
  - performing work for another company with a unit located in the same site; or
  - performing pro bono work for a governmental agency or charitable organization.
- The laboratory is accredited under federal law.
- The data are needed for emergency-response activities, and a laboratory accredited under the Texas Laboratory Accreditation Program is not available.
- The laboratory supplies data for which the TCEQ does not offer accreditation.

The applicant should review 30 TAC Chapter 25 for specific requirements.

The following certification statement shall be signed and submitted with every application. See the Signature Page section in the Instructions, for a list of designated representatives who may sign the certification.

CERTIFICATION:

I certify that all laboratory tests submitted with this application meet the requirements of *30 TAC Chapter 25, Environmental Testing Laboratory Accreditation and Certification.*

Printed Name: Mr. Don McCoy

Title: Mayor

Signature: _____

Date: 1/28/2025

THE CITY OF FULSHEAR TEXAS

ATTACHMENT F.

DOMESTIC TECHNICAL REPORT WORKSHEET 2.0

DOMESTIC WASTEWATER PERMIT APPLICATION WORKSHEET 2.0: RECEIVING WATERS

The following information is required for all TPDES permit applications.

Section 1. Domestic Drinking Water Supply (Instructions Page 63)

Is there a surface water intake for domestic drinking water supply located within 5 miles downstream from the point or proposed point of discharge?

☐ Yes ☒ No

If **no**, proceed it Section 2. **If yes**, provide the following:

Owner of the drinking water supply: Click to enter text.

Distance and direction to the intake: Click to enter text.

Attach a USGS map that identifies the location of the intake.

Attachment: Click to enter text.

Section 2. Discharge into Tidally Affected Waters (Instructions Page 63)

Does the facility discharge into tidally affected waters?

☐ Yes ☒ No

If **no**, proceed to Section 3. **If yes**, complete the remainder of this section. If no, proceed to Section 3.

A. Receiving water outfall

Width of the receiving water at the outfall, in feet: Click to enter text.

B. Oyster waters

Are there oyster waters in the vicinity of the discharge?

☐ Yes ☐ No

If yes, provide the distance and direction from outfall(s).

Click to enter text.

C. Sea grasses

Are there any sea grasses within the vicinity of the point of discharge?

☐ Yes ☐ No

If yes, provide the distance and direction from the outfall(s).

Click to enter text.

Section 3. Classified Segments (Instructions Page 63)

Is the discharge directly into (or within 300 feet of) a classified segment?

☐ Yes ☒ No

If yes, this Worksheet is complete.

If no, complete Sections 4 and 5 of this Worksheet.

Section 4. Description of Immediate Receiving Waters (Instructions Page 63)

Name of the immediate receiving waters: Union Chapel Branch

A. Receiving water type

Identify the appropriate description of the receiving waters.

☒ Stream

☐ Freshwater Swamp or Marsh

☐ Lake or Pond

Surface area, in acres: Click to enter text.

Average depth of the entire water body, in feet: Click to enter text.

Average depth of water body within a 500-foot radius of discharge point, in feet: Click to enter text.

☐ Man-made Channel or Ditch

☐ Open Bay

☐ Tidal Stream, Bayou, or Marsh

☐ Other, specify: Click to enter text.

B. Flow characteristics

If a stream, man-made channel or ditch was checked above, provide the following. For existing discharges, check one of the following that best characterizes the area *upstream* of the discharge. For new discharges, characterize the area *downstream* of the discharge (check one).

☒ Intermittent - dry for at least one week during most years

☐ Intermittent with Perennial Pools - enduring pools with sufficient habitat to maintain significant aquatic life uses

☐ Perennial - normally flowing

Check the method used to characterize the area upstream (or downstream for new dischargers).

☐ USGS flow records

☐ Historical observation by adjacent landowners

☒ Personal observation

☐ Other, specify: Click to enter text.

C. Downstream perennial confluences

List the names of all perennial streams that join the receiving water within three miles downstream of the discharge point.

Bessie's Creek

D. Downstream characteristics

Do the receiving water characteristics change within three miles downstream of the discharge (e.g., natural or man-made dams, ponds, reservoirs, etc.)?

☐ Yes ☒ No

If yes, discuss how.

Click to enter text.

E. Normal dry weather characteristics

Provide general observations of the water body during normal dry weather conditions.

Dry creek with little to no flow.

Date and time of observation: January 29, 2025

Was the water body influenced by stormwater runoff during observations?

☒ Yes ☐ No

Section 5. General Characteristics of the Waterbody (Instructions Page 65)

A. Upstream influences

Is the immediate receiving water upstream of the discharge or proposed discharge site influenced by any of the following? Check all that apply.

☐ Oil field activities

☒ Upstream discharges

☐ Septic tanks

☐ Urban runoff

☐ Agricultural runoff

☐ Other(s), specify: Click to enter text.

B. Waterbody uses

Observed or evidences of the following uses. Check all that apply.

- ☒ Livestock watering
- ☐ Irrigation withdrawal
- ☐ Fishing
- ☐ Domestic water supply
- ☐ Park activities
- ☐ Contact recreation
- ☐ Non-contact recreation
- ☐ Navigation
- ☐ Industrial water supply
- ☐ Other(s), specify: Click to enter text.

C. Waterbody aesthetics

Check one of the following that best describes the aesthetics of the receiving water and the surrounding area.

- ☐ Wilderness: outstanding natural beauty; usually wooded or unpastured area; water clarity exceptional
- ☒ Natural Area: trees and/or native vegetation; some development evident (from fields, pastures, dwellings); water clarity discolored
- ☐ Common Setting: not offensive; developed but uncluttered; water may be colored or turbid
- ☐ Offensive: stream does not enhance aesthetics; cluttered; highly developed; dumping areas; water discolored

ATTACHMENT G.

DOMESTIC TECHNICAL REPORT WORKSHEET 4.0

DOMESTIC WASTEWATER PERMIT APPLICATION WORKSHEET 4.0: POLLUTANT ANALYSIS REQUIREMENTS

The following **is required** for facilities with a permitted or proposed flow of **1.0 MGD or greater**, facilities with an approved **pretreatment** program, or facilities classified as a **major** facility. See instructions for further details.

This worksheet is not required minor amendments without renewal.

Section 1. Toxic Pollutants (Instructions Page 76)

For pollutants identified in Table 4.0(1), indicate the type of sample.

Grab ☐ Composite ☐

Date and time sample(s) collected: Click to enter text.

Table 4.0(1) – Toxics Analysis

Pollutant	AVG Effluent Conc. (µg/l)	MAX Effluent Conc. (µg/l)	Number of Samples	MAL (µg/l)
Acrylonitrile				50
Aldrin				0.01
Aluminum				2.5
Anthracene				10
Antimony				5
Arsenic				0.5
Barium				3
Benzene				10
Benzidine				50
Benzo(a)anthracene				5
Benzo(a)pyrene				5
Bis(2-chloroethyl)ether				10
Bis(2-ethylhexyl)phthalate				10
Bromodichloromethane				10
Bromoform				10
Cadmium				1
Carbon Tetrachloride				2
Carbaryl				5
Chlordane*				0.2
Chlorobenzene				10
Chlorodibromomethane				10

Pollutant	AVG Effluent Conc. (µg/l)	MAX Effluent Conc. (µg/l)	Number of Samples	MAL (µg/l)
Chloroform				10
Chlorpyrifos				0.05
Chromium (Total)				3
Chromium (Tri) **(*1)**				N/A
Chromium (Hex)				3
Copper				2
Chrysene				5
p-Chloro-m-Cresol				10
4,6-Dinitro-o-Cresol				50
p-Cresol				10
Cyanide **(*2)**				10
4,4'- DDD				0.1
4,4'- DDE				0.1
4,4'- DDT				0.02
2,4-D				0.7
Demeton (O and S)				0.20
Diazinon				0.5/0.1
1,2-Dibromoethane				10
m-Dichlorobenzene				10
o-Dichlorobenzene				10
p-Dichlorobenzene				10
3,3'-Dichlorobenzidine				5
1,2-Dichloroethane				10
1,1-Dichloroethylene				10
Dichloromethane				20
1,2-Dichloropropane				10
1,3-Dichloropropene				10
Dicofol				1
Dieldrin				0.02
2,4-Dimethylphenol				10
Di-n-Butyl Phthalate				10
Diuron				0.09
Endosulfan I (alpha)				0.01

Pollutant	AVG Effluent Conc. (µg/l)	MAX Effluent Conc. (µg/l)	Number of Samples	MAL (µg/l)
Endosulfan II (beta)				0.02
Endosulfan Sulfate				0.1
Endrin				0.02
Epichlorohydrin				---
Ethylbenzene				10
Ethylene Glycol				---
Fluoride				500
Guthion				0.1
Heptachlor				0.01
Heptachlor Epoxide				0.01
Hexachlorobenzene				5
Hexachlorobutadiene				10
Hexachlorocyclohexane (alpha)				0.05
Hexachlorocyclohexane (beta)				0.05
gamma-Hexachlorocyclohexane (Lindane)				0.05
Hexachlorocyclopentadiene				10
Hexachloroethane				20
Hexachlorophene				10
4,4'-Isopropylidenediphenol				1
Lead				0.5
Malathion				0.1
Mercury				0.005
Methoxychlor				2
Methyl Ethyl Ketone				50
Methyl tert-butyl ether				---
Mirex				0.02
Nickel				2
Nitrate-Nitrogen				100
Nitrobenzene				10
N-Nitrosodiethylamine				20
N-Nitroso-di-n-Butylamine				20
Nonylphenol				333

Pollutant	AVG Effluent Conc. (µg/l)	MAX Effluent Conc. (µg/l)	Number of Samples	MAL (µg/l)
Parathion (ethyl)				0.1
Pentachlorobenzene				20
Pentachlorophenol				5
Phenanthrene				10
Polychlorinated Biphenyls (PCB's) **(*3)**				0.2
Pyridine				20
Selenium				5
Silver				0.5
1,2,4,5-Tetrachlorobenzene				20
1,1,2,2-Tetrachloroethane				10
Tetrachloroethylene				10
Thallium				0.5
Toluene				10
Toxaphene				0.3
2,4,5-TP (Silvex)				0.3
Tributyltin (see instructions for explanation)				0.01
1,1,1-Trichloroethane				10
1,1,2-Trichloroethane				10
Trichloroethylene				10
2,4,5-Trichlorophenol				50
TTHM (Total Trihalomethanes)				10
Vinyl Chloride				10
Zinc				5

(*1) Determined by subtracting hexavalent Cr from total Cr.

(*2) Cyanide, amenable to chlorination or weak-acid dissociable.

(*3) The sum of seven PCB congeners 1242, 1254, 1221, 1232, 1248, 1260, and 1016.

Section 2. Priority Pollutants

For pollutants identified in Tables 4.0(2)A-E, indicate type of sample.

Grab ☐ Composite ☐

Date and time sample(s) collected: Click to enter text.

Table 4.0(2)A – Metals, Cyanide, and Phenols

Pollutant	AVG Effluent Conc. (µg/l)	MAX Effluent Conc. (µg/l)	Number of Samples	MAL (µg/l)
Antimony				5
Arsenic				0.5
Beryllium				0.5
Cadmium				1
Chromium (Total)				3
Chromium (Hex)				3
Chromium (Tri) **(*1)**				N/A
Copper				2
Lead				0.5
Mercury				0.005
Nickel				2
Selenium				5
Silver				0.5
Thallium				0.5
Zinc				5
Cyanide **(*2)**				10
Phenols, Total				10

(*1) Determined by subtracting hexavalent Cr from total Cr.

(*2) Cyanide, amenable to chlorination or weak-acid dissociable

Table 4.0(2)B – Volatile Compounds

Pollutant	AVG Effluent Conc. (µg/l)	MAX Effluent Conc. (µg/l)	Number of Samples	MAL (µg/l)
Acrolein				50
Acrylonitrile				50
Benzene				10
Bromoform				10
Carbon Tetrachloride				2
Chlorobenzene				10
Chlorodibromomethane				10
Chloroethane				50
2-Chloroethylvinyl Ether				10
Chloroform				10
Dichlorobromomethane [Bromodichloromethane]				10
1,1-Dichloroethane				10
1,2-Dichloroethane				10
1,1-Dichloroethylene				10
1,2-Dichloropropane				10
1,3-Dichloropropylene [1,3-Dichloropropene]				10
1,2-Trans-Dichloroethylene				10
Ethylbenzene				10
Methyl Bromide				50
Methyl Chloride				50
Methylene Chloride				20
1,1,2,2-Tetrachloroethane				10
Tetrachloroethylene				10
Toluene				10
1,1,1-Trichloroethane				10
1,1,2-Trichloroethane				10
Trichloroethylene				10
Vinyl Chloride				10

Table 4.0(2)C – Acid Compounds

Pollutant	AVG Effluent Conc. (µg/l)	MAX Effluent Conc. (µg/l)	Number of Samples	MAL (µg/l)
2-Chlorophenol				10
2,4-Dichlorophenol				10
2,4-Dimethylphenol				10
4,6-Dinitro-o-Cresol				50
2,4-Dinitrophenol				50
2-Nitrophenol				20
4-Nitrophenol				50
P-Chloro-m-Cresol				10
Pentalchlorophenol				5
Phenol				10
2,4,6-Trichlorophenol				10

Table 4.0(2)D – Base/Neutral Compounds

Pollutant	AVG Effluent Conc. (µg/l)	MAX Effluent Conc. (µg/l)	Number of Samples	MAL (µg/l)
Acenaphthene				10
Acenaphthylene				10
Anthracene				10
Benzidine				50
Benzo(a)Anthracene				5
Benzo(a)Pyrene				5
3,4-Benzofluoranthene				10
Benzo(ghi)Perylene				20
Benzo(k)Fluoranthene				5
Bis(2-Chloroethoxy)Methane				10
Bis(2-Chloroethyl)Ether				10
Bis(2-Chloroisopropyl)Ether				10
Bis(2-Ethylhexyl)Phthalate				10
4-Bromophenyl Phenyl Ether				10
Butyl benzyl Phthalate				10
2-Chloronaphthalene				10
4-Chlorophenyl phenyl ether				10
Chrysene				5
Dibenzo(a,h)Anthracene				5
1,2-(o)Dichlorobenzene				10
1,3-(m)Dichlorobenzene				10
1,4-(p)Dichlorobenzene				10
3,3-Dichlorobenzidine				5
Diethyl Phthalate				10
Dimethyl Phthalate				10
Di-n-Butyl Phthalate				10
2,4-Dinitrotoluene				10
2,6-Dinitrotoluene				10
Di-n-Octyl Phthalate				10
1,2-Diphenylhydrazine (as Azo-benzene)				20
Fluoranthene				10

Pollutant	AVG Effluent Conc. (µg/l)	MAX Effluent Conc. (µg/l)	Number of Samples	MAL (µg/l)
Fluorene				10
Hexachlorobenzene				5
Hexachlorobutadiene				10
Hexachlorocyclo-pentadiene				10
Hexachloroethane				20
Indeno(1,2,3-cd)pyrene				5
Isophorone				10
Naphthalene				10
Nitrobenzene				10
N-Nitrosodimethylamine				50
N-Nitrosodi-n-Propylamine				20
N-Nitrosodiphenylamine				20
Phenanthrene				10
Pyrene				10
1,2,4-Trichlorobenzene				10

Table 4.0(2)E - Pesticides

Pollutant	AVG Effluent Conc. (µg/l)	MAX Effluent Conc. (µg/l)	Number of Samples	MAL (µg/l)
Aldrin				0.01
alpha-BHC (Hexachlorocyclohexane)				0.05
beta-BHC (Hexachlorocyclohexane)				0.05
gamma-BHC (Hexachlorocyclohexane)				0.05
delta-BHC (Hexachlorocyclohexane)				0.05
Chlordane				0.2
4,4-DDT				0.02
4,4-DDE				0.1
4,4,-DDD				0.1
Dieldrin				0.02
Endosulfan I (alpha)				0.01
Endosulfan II (beta)				0.02
Endosulfan Sulfate				0.1
Endrin				0.02
Endrin Aldehyde				0.1
Heptachlor				0.01
Heptachlor Epoxide				0.01
PCB-1242				0.2
PCB-1254				0.2
PCB-1221				0.2
PCB-1232				0.2
PCB-1248				0.2
PCB-1260				0.2
PCB-1016				0.2
Toxaphene				0.3

* For PCBS, if all are non-detects, enter the highest non-detect preceded by a "<".

Section 3. Dioxin/Furan Compounds

A. Indicate which of the following compounds from may be present in the influent from a contributing industrial user or significant industrial user. Check all that apply.

☐ 2,4,5-trichlorophenoxy acetic acid

Common Name 2,4,5-T, CASRN 93-76-5

☐ 2-(2,4,5-trichlorophenoxy) propanoic acid

Common Name Silvex or 2,4,5-TP, CASRN 93-72-1

☐ 2-(2,4,5-trichlorophenoxy) ethyl 2,2-dichloropropionate

Common Name Erbon, CASRN 136-25-4

☐ 0,0-dimethyl 0-(2,4,5-trichlorophenyl) phosphorothioate

Common Name Ronnel, CASRN 299-84-3

☐ 2,4,5-trichlorophenol

Common Name TCP, CASRN 95-95-4

☐ hexachlorophene

Common Name HCP, CASRN 70-30-4

For each compound identified, provide a brief description of the conditions of its/their presence at the facility.

Click to enter text.

B. Do you know or have any reason to believe that 2,3,7,8 Tetrachlorodibenzo-P-Dioxin (TCDD) or any congeners of TCDD may be present in your effluent?

☐ Yes ☒ No

If **yes**, provide a brief description of the conditions for its presence.

Click to enter text.

C. If any of the compounds in Subsection A **or** B are present, complete Table 4.0(2)F. For pollutants identified in Table 4.0(2)F, indicate the type of sample.

Grab ☐ Composite ☐

Date and time sample(s) collected: Click to enter text.

Table 4.0(2)F – Dioxin/Furan Compounds

Compound	Toxic Equivalency Factors	Wastewater Concentration (ppq)	Wastewater Equivalents (ppq)	Sludge Concentration (ppt)	Sludge Equivalents (ppt)	MAL (ppq)
2,3,7,8 TCDD	1					10
1,2,3,7,8 PeCDD	0.5					50
2,3,7,8 HxCDDs	0.1					50
1,2,3,4,6,7,8 HpCDD	0.01					50
2,3,7,8 TCDF	0.1					10
1,2,3,7,8 PeCDF	0.05					50
2,3,4,7,8 PeCDF	0.5					50
2,3,7,8 HxCDFs	0.1					50
2,3,4,7,8 HpCDFs	0.01					50
OCDD	0.0003					100
OCDF	0.0003					100
PCB 77	0.0001					0.5
PCB 81	0.0003					0.5
PCB 126	0.1					0.5
PCB 169	0.03					0.5
Total						

ATTACHMENT H.

DOMESTIC TECHNICAL REPORT WORKSHEET 5.0

DOMESTIC WASTEWATER PERMIT APPLICATION WORKSHEET 5.0: TOXICITY TESTING REQUIREMENTS

The following **is required** for facilities with a current operating design flow of**1.0 MGD or greater**, with an EPA-approved **pretreatment** program (or those required to have one under 40 CFR Part 403), or are required to perform Whole Effluent Toxicity testing. See Page 86 of the instructions for further details.

This worksheet is not required minor amendments without renewal.

Section 1. Required Tests

Indicate the number of 7-day chronic or 48-hour acute Whole Effluent Toxicity (WET) tests performed in the four and one-half years prior to submission of the application.

7-day Chronic: Click to enter text.

48-hour Acute: Click to enter text.

Section 2. Toxicity Reduction Evaluations (TREs)

Has this facility completed a TRE in the past four and a half years? Or is the facility currently performing a TRE?

☐ Yes ☒ No

If yes, describe the progress to date, if applicable, in identifying and confirming the toxicant.

Click to enter text.

*The current operating design flow of the City of Fulshear Water Reclamation Facility is 0.7 MGD. This is less than 1.0 MGD.

Section 3. Summary of WET Tests

If the required biomonitoring test information has not been previously submitted via both the Discharge Monitoring Reports (DMRs) and the Table 1 (as found in the permit), provide a summary of the testing results for all valid and invalid tests performed over the past four and one-half years. Make additional copies of this table as needed.

Table 5.0(1) Summary of WET Tests

Test Date	Test Species	NOEC Survival	NOEC Sub-lethal

ATTACHMENT I.

DOMESTIC TECHNICAL REPORT WORKSHEET 6.0

DOMESTIC WASTEWATER PERMIT APPLICATION WORKSHEET 6.0: INDUSTRIAL WASTE CONTRIBUTION

The following **is required** for **all publicly owned treatment works.**

Section 1. All POTWs (Instructions Page 87)

A. Industrial users (IUs)

Provide the number of each of the following types of industrial users (IUs) that discharge to your POTW and the daily flows from each user. See the Instructions for definitions of Categorical IUs, Significant IUs – non-categorical, and Other IUs.

If there are no users, enter 0 (zero).

Categorical IUs:

Number of IUs: 0

Average Daily Flows, in MGD: Click to enter text.

Significant IUs – non-categorical:

Number of IUs: 0

Average Daily Flows, in MGD: Click to enter text.

Other IUs:

Number of IUs: 0

Average Daily Flows, in MGD: Click to enter text.

B. Treatment plant interference

In the past three years, has your POTW experienced treatment plant interference (see instructions)?

☐ Yes ☒ No

If yes, identify the dates, duration, description of interference, and probable cause(s) and possible source(s) of each interference event. Include the names of the IUs that may have caused the interference.

Click to enter text.

C. Treatment plant pass through

In the past three years, has your POTW experienced pass through (see instructions)?

☐ Yes ☒ No

If yes, identify the dates, duration, a description of the pollutants passing through the treatment plant, and probable cause(s) and possible source(s) of each pass through event. Include the names of the IUs that may have caused pass through.

D. Pretreatment program

Does your POTW have an approved pretreatment program?

☐ Yes ☒ No

If yes, complete Section 2 only of this Worksheet.

Is your POTW required to develop an approved pretreatment program?

☐ Yes ☒ No

If yes, complete Section 2.c. and 2.d. only, and skip Section 3.

If no to either question above, skip Section 2 and complete Section 3 for each significant industrial user and categorical industrial user.

Section 2. POTWs with Approved Programs or Those Required to Develop a Program (Instructions Page 87)

A. Substantial modifications

Have there been any **substantial modifications** to the approved pretreatment program that have not been submitted to the TCEQ for approval according to *40 CFR §403.18*?

☐ Yes ☐ No

If yes, identify the modifications that have not been submitted to TCEQ, including the purpose of the modification.

Click to enter text.

B. Non-substantial modifications

Have there been any **non-substantial modifications** to the approved pretreatment program that have not been submitted to TCEQ for review and acceptance?

☐ Yes ☐ No

If yes, identify all non-substantial modifications that have not been submitted to TCEQ, including the purpose of the modification.

Click to enter text.

C. Effluent parameters above the MAL

In Table 6.0(1), list all parameters measured above the MAL in the POTW's effluent monitoring during the last three years. Submit an attachment if necessary.

Table 3.0(1) – Parameters Above the MAL

Pollutant	Concentration	MAL	Units	Date

D. Industrial user interruptions

Has any SIU, CIU, or other IU caused or contributed to any problems (excluding interferences or pass throughs) at your POTW in the past three years?

☐ Yes ☐ No

If yes, identify the industry, describe each episode, including dates, duration, description of the problems, and probable pollutants.

Click to enter text.

Section 3. Significant Industrial User (SIU) Information and Categorical Industrial User (CIU) (Instructions Page 88)

A. General information

Company Name: Click to enter text.

SIC Code: Click to enter text.

Contact name: Click to enter text.

Address: Click to enter text.

City, State, and Zip Code: Click to enter text.

Telephone number: Click to enter text.

Email address: Click to enter text.

B. Process information

Describe the industrial processes or other activities that affect or contribute to the SIU(s) or CIU(s) discharge (i.e., process and non-process wastewater).

Click to enter text.

C. Product and service information

Provide a description of the principal product(s) or services performed.

Click to enter text.

D. Flow rate information

See the Instructions for definitions of "process" and "non-process wastewater."

Process Wastewater:

Discharge, in gallons/day: Click to enter text.

Discharge Type: ☐ Continuous ☐ Batch ☐ Intermittent

Non-Process Wastewater:

Discharge, in gallons/day: Click to enter text.

Discharge Type: ☐ Continuous ☐ Batch ☐ Intermittent

E. Pretreatment standards

Is the SIU or CIU subject to technically based local limits as defined in the instructions?

☐ Yes ☐ No

Is the SIU or CIU subject to categorical pretreatment standards found in *40 CFR Parts 405-471*?

☐ Yes ☐ No

If subject to categorical pretreatment standards, indicate the applicable category and subcategory for each categorical process.

Category: Subcategories: Click to enter text.

Click or tap here to enter text. Click to enter text.

Category: Click to enter text.

Subcategories: Click to enter text.

Category: Click to enter text.

Subcategories: Click to enter text.

Category: Click to enter text.

Subcategories: Click to enter text.

Category: Click to enter text.

Subcategories: Click to enter text.

F. Industrial user interruptions

Has the SIU or CIU caused or contributed to any problems (e.g., interferences, pass through, odors, corrosion, blockages) at your POTW in the past three years?

☐ Yes ☐ No

If yes, identify the SIU, describe each episode, including dates, duration, description of problems, and probable pollutants.

Click to enter text.

ATTACHMENT J.

ORIGINAL USGS MAP

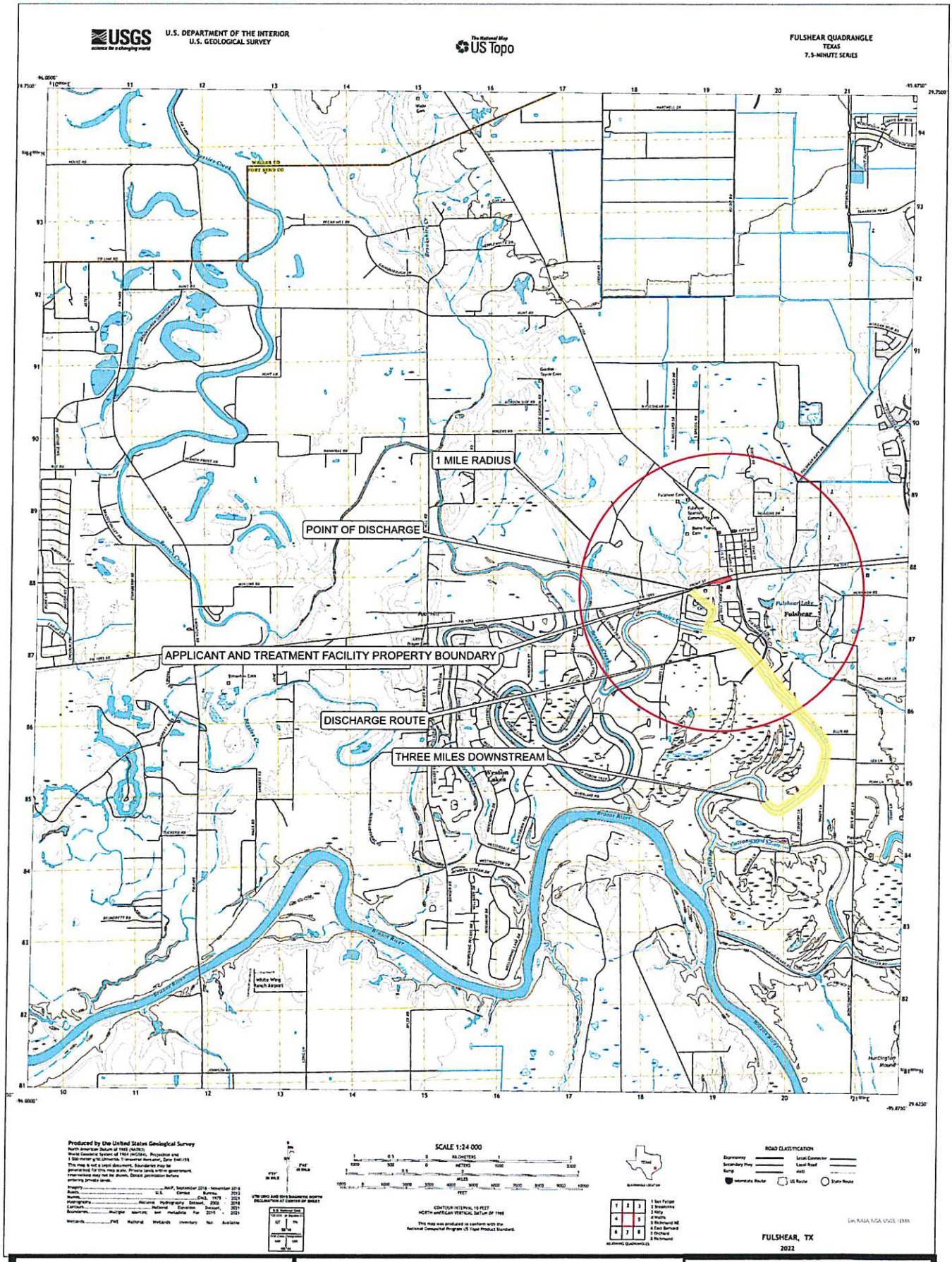

Kimley»Horn

CITY OF FULSHEAR
WATER RELCMATION FACILITY
PERMIT RENEWAL
ORIGINAL USGS MAP

DATE: JANUARY 2025
DESIGN: RED
DRAWN: REC
CHECKED: RED
KHA NO: 067794907

ATTACHMENT K.

EPAY VOUCHER(S)

TEXAS COMMISSION ON ENVIRONMENTAL QUALITY
EPAY • ONLINE PAYMENT APPLICATION

Questions or Comments >>

Shopping Cart | Select Fee | Search Transactions | Sign Out

Print this voucher for your records. If you are sending the TCEQ hardcopy documents related to this payment, include a copy of this voucher.

Transaction Information

Voucher Number: 744785
Trace Number: 582EA000647362
Date: 01/28/2025 04:45 PM
Payment Method: CC - Authorization 0000009800
Voucher Amount: $2,000.00
Fee Type: WW PERMIT - FACILITY WITH FLOW >= 1.0 MGD - RENEWAL
ePay Actor: BEN GLYNN
Actor Email: bglynn@fulsheartexas.gov
IP: 50.236.146.66

Payment Contact Information

Name: BEN GLYNN
Company: CITY OF FULSHEAR
Address: 6611 W CROSS CREEK BEND, FULSHEAR, TX 77441
Phone: 281-346-1796

Site Information

RN: RN101920932
Site Name: CITY OF FULSHEAR WATER RECLAMATION FACILITY
Site Address: 30618 FM HIGHWAY1093, FULSHEAR, TX 77441

Customer Information

CN: CN600700066
Customer Name: CITY OF FULSHEAR
Customer Address: P O BOX 279, FULSHEAR, TX 77441

Other Information

Program Area ID: WQ0013314001

Close

Your transaction is complete. Thank you for using TCEQ ePay.

Note: It may take up to 3 working days for this electronic payment to be processed and be reflected in the TCEQ ePay system. Print this receipt and the vouchers for your records. An email receipt has also been sent.

Transaction Information

Trace Number: 582EA000647362
Date: 01/28/2025 04:45 PM
Payment Method: CC - Authorization 0000009800
ePay Actor: BEN GLYNN
Actor Email: bglynn@fulsheartexas.gov
IP: 50.236.146.66
TCEQ Amount: $2,015.00
Texas.gov Price: $2,060.59*

* This service is provided by Texas.gov, the official website of Texas. The price of this service includes funds that support the ongoing operations and enhancements of Texas.gov, which is provided by a third party in partnership with the State.

Payment Contact Information

Name: BEN GLYNN
Company: CITY OF FULSHEAR
Address: 6611 W CROSS CREEK BEND, FULSHEAR, TX 77441
Phone: 281-346-1796

Cart Items

Click on the voucher number to see the voucher details.

Voucher	Fee Description	AR Number	Amount
744785	WW PERMIT - FACILITY WITH FLOW >= 1.0 MGD - RENEWAL		$2,000.00
744786	30 TAC 305.53B WQ RENEWAL NOTIFICATION FEE		$15.00
		TCEQ Amount:	$2,015.00

ePay Again | Exit ePay

Note: It may take up to 3 working days for this electronic payment to be processed and be reflected in the TCEQ ePay system. Print this receipt for your records.

Print this voucher for your records. If you are sending the TCEQ hardcopy documents related to this payment, include a copy of this voucher.

Transaction Information

Voucher Number: 744786
Trace Number: 582EA000647362
Date: 01/28/2025 04:45 PM
Payment Method: CC - Authorization 0000009800
Voucher Amount: $15.00
Fee Type: 30 TAC 305.53B WQ RENEWAL NOTIFICATION FEE
ePay Actor: BEN GLYNN
Actor Email: bglynn@fulsheartexas.gov
IP: 50.236.146.66

Payment Contact Information

Name: BEN GLYNN
Company: CITY OF FULSHEAR
Address: 6611 W CROSS CREEK BEND, FULSHEAR, TX 77441
Phone: 281-346-1796

Close

© 2002-2025 Texas Commission on Environmental Quality

ATTACHMENT L.

PLAIN LANGUAGE SUMMARY FORM

TEXAS COMMISSION ON ENVIRONMENTAL QUALITY

SUMMARY OF APPLICATION IN PLAIN LANGUAGE FOR TPDES OR TLAP PERMIT APPLICATIONS

Summary of Application (in plain language) Template and Instructions for Texas Pollutant Discharge Elimination System (TPDES) and Texas Land Application (TLAP) Permit Applications

Applicants should use this template to develop a plain language summary of your facility and application as required by Title 30, Texas Administrative Code (30 TAC), Chapter 39, Subchapter H. You may modify the template as necessary to accurately describe your facility as long as the summary includes the following information: (1) the function of the proposed plant or facility; (2) the expected output of the proposed plant or facility; (3) the expected pollutants that may be emitted or discharged by the proposed plant or facility; and (4) how you will control those pollutants, so that the proposed plant will not have an adverse impact on human health or the environment.

Fill in the highlighted areas below to describe your facility and application in plain language. Instructions and examples are provided below. Make any other edits necessary to improve readability or grammar and to comply with the rule requirements. After filling in the information for your facility delete these instructions.

If you are subject to the alternative language notice requirements in 30 TAC Section 39.426, **you must provide a translated copy of the completed plain language summary in the appropriate alternative language as part of your application package**. For your convenience, a Spanish template has been provided below.

ENGLISH TEMPLATE FOR TPDES or TLAP NEW/RENEWAL/AMENDMENT APPLICATIONS DOMESTIC WASTEWATER/STORMWATER

The following summary is provided for this pending water quality permit application being reviewed by the Texas Commission on Environmental Quality as required by 30 TAC Chapter 39. The information provided in this summary may change during the technical review of the application and is not a federal enforceable representation of the permit application.

City of Fulshear (CN600700066) operates the City of Fulshear Water Reclamation Facility (RN101920932), a 1.10 MGD wastewater treatment plant that is used to serve the downtown community of City of Fulshear. The facility is located at 30618 F.M. Highway 1098, in Fulshear, Fort Bend County, Texas 77441. This permit application is to request a renewal for the existing permit.

Discharges from the facility are expected to contain standard domestic wastewater pollutants, such as BOD, Ammonia Nitrogen, and Total Suspended Solids. Domestic wastewater is treated by entering the treatment facility at the headworks before flow splitting into 11 aeration basins, 4 clarifiers, 11 aerobic digesters, 1 chlorine contact basin, and then the existing outfall. Solids are pumped out of the aerobic digesters and then trucked to a landfill.

PLANTILLA EN ESPAÑOL PARA SOLICITUDES NUEVAS/RENOVACIONES/ENMIENDAS DE TPDES o TLAP

AGUAS RESIDUALES DOMESTICAS **/AGUAS PLUVIALES**

El siguiente resumen se proporciona para esta solicitud de permiso de calidad del agua pendiente que está siendo revisada por la Comisión de Calidad Ambiental de Texas según lo requerido por el Capítulo 39 del Código Administrativo de Texas 30. La información proporcionada en este resumen puede cambiar durante la revisión técnica de la solicitud y no es una representación ejecutiva fedérale de la solicitud de permiso.

City of Fulshear (CN600700066) opera a planta de tratamiento de aguas residuales de City of Fulshear (RN101920932), una planta de tratamiento de aguas residuales de 1.10 MGD para atender a la comunidad del centro de la ciudad de Fulshear. La instalación está ubicada en la calle 30618 F.M. Highway 1098, en la Ciudad de Fulshear, Condado de Fort Bend, Texas 77441. Esta solicitud de permiso es para solicitar una renovación del permiso existente.

Se espera que las descargas de la instalación contengan contaminantes de aguas residuales estándares, como demanda biológica de oxigeno, nitrógeno amoniacal, y solidos suspendidos totales. Las aguas residuales domésticas. están tratado por las pantallas localizadas al principio de la planta antes de que el flujo se divida entre 11 tanques de aireación, 4 tanques clarificadores, 11 digestores aeróbicos, 1 tanque de contacto de cloro, y luego el existente. Los sólidos se bombearán desde los digestores aeróbicos y luego se transportarán en camiones a un vertedero .

INSTRUCTIONS

1. Enter the name of applicant in this section. The applicant name should match the name associated with the customer number.
2. Enter the Customer Number in this section. Each Individual or Organization is issued a unique 11-digit identification number called a CN (e.g. CN123456789).
3. Choose "operates" in this section for existing facility applications or choose "proposes to operate" for new facility applications.
4. Enter the name of the facility in this section. The facility name should match the name associated with the regulated entity number.
5. Enter the Regulated Entity number in this section. Each site location is issued a unique 11-digit identification number called an RN (e.g. RN123456789).
6. Choose the appropriate article (a or an) to complete the sentence.
7. Enter a description of the facility in this section. For example: steam electric generating facility, nitrogenous fertilizer manufacturing facility, etc.
8. Choose "is" for an existing facility or "will be" for a new facility.
9. Enter the location of the facility in this section.
10. Enter the City nearest the facility in this section.
11. Enter the County nearest the facility in this section.
12. Enter the zip code for the facility address in this section.
13. Enter a summary of the application request in this section. For example: renewal to discharge 25,000 gallons per day of treated domestic wastewater, new application to discharge process wastewater and stormwater on an intermittent and flow-variable basis, or major amendment to reduce monitoring frequency for pH, etc. If more than one outfall is included in the application, provide applicable information for each individual outfall.
14. List all pollutants expected in the discharge from this facility in this section. If applicable, refer to the pollutants from any federal numeric effluent limitations that apply to your facility.
15. Enter the discharge types from your facility in this section (e.g., stormwater, process wastewater, once through cooling water, etc.)
16. Choose the appropriate verb tense to complete the sentence.
17. Enter a description of the wastewater treatment used at your facility. Include a description of each process, starting with initial treatment and finishing with the outfall/point of disposal. Use additional lines for individual discharge types if necessary.

Questions or comments concerning this form may be directed to the Water Quality Division's Application Review and Processing Team by email at WQ-ARPTeam@tceq.texas.gov or by phone at (512) 239-4671.

Example 1: Industrial Wastewater TPDES Application (ENGLISH)

The following summary is provided for this pending water quality permit application being reviewed by the Texas Commission on Environmental Quality as required by 30 TAC Chapter 39. The information provided in this summary may change during the technical review of the application and are not federal enforceable representations of the permit application.

ABC Corporation (CN600000000) operates the Starr Power Station (RN10000000000), a two-unit gas-fired electric generating facility. Unit 1 has a generating capacity of 393 megawatts (MWs) and Unit 2 has a generating capacity of 528 MWs. The facility is located at 1356 Starr Street, near the City of Austin, Travis County, Texas 78753.

This application is for a renewal to discharge 870,000,000 gallons per day of once through cooling water, auxiliary cooling water, and also authorizes the following waste streams monitored inside the facility (internal outfalls) before it is mixed with the other wastewaters authorized for discharge via main Outfall 001, referred to as "previously monitored effluents" (low-volume wastewater, metal-cleaning waste, and stormwater (from diked oil storage area yards and storm drains)) via Outfall 001. Low-volume waste sources, metal-cleaning waste, and stormwater drains on a continuous and flow-variable basis via internal Outfall 101.

The discharge of once through cooling water via Outfall 001 and low-volume waste and metal-cleaning waste via Outfall 101 from this facility is subject to federal effluent limitation guidelines at 40 CFR Part 423. The pollutants expected from these discharges based on 40 CFR Part 423 are: free available chlorine, total residual chlorine, total suspended solids, oil and grease, total iron, total copper, and pH. Temperature is also expected from these discharges. Additional potential pollutants are included in the Industrial Wastewater Application Technical Report, Worksheet 2.0.

Cooling water and boiler make-up water are supplied by Lake Starr Reservoir. The City of Austin municipal water plant (CN600000000, PWS 00000) supplies the facility's potable water and serves as an alternate source of boiler make-up water. Water from the Lake Starr Reservoir is withdrawn at the intake structure and treated with sodium hypochlorite to prevent biofouling and sodium bromide as a chlorine enhancer to improve efficacy and then passed through condensers and auxiliary equipment on a once-through basis to cool equipment and condense exhaust steam.

Low-volume wastewater from blowdown of boiler Units 1 and 2 and metal-cleaning wastes receive no treatment prior to discharge via Outfall 101. Plant floor and equipment drains and stormwater runoff from diked oil storage areas, yards, and storm drains are routed through an oil and water separator prior to discharge via Outfall 101. Domestic wastewater, blowdown, and backwash water from the service water filter, clarifier, and sand filter are routed to the Starr Creek Domestic Sewage Treatment Plant, TPDES Permit No. WQ0010000001, for treatment and disposal. Metal-cleaning waste from equipment cleaning is generally disposed of off-site.

Example 2: Domestic Wastewater TPDES Renewal application

The following summary is provided for this pending water quality permit application being reviewed by the Texas Commission on Environmental Quality as required by 30 Texas Administrative Code Chapter 39. The information provided in this summary may change during the technical review of the application and are not federal enforceable representations of the permit application.

The City of Texas (CN000000000) operates the City of Texas wastewater treatment plant (RN000000000), an activated sludge process plant operated in the complete mix mode. The facility is located at 123 Texas Street, near the City of More Texas, Texas County, Texas 71234.

This application is for a renewal to discharge at an annual average flow of 1,200,000 gallons per day of treated domestic wastewater via Outfalls 001 and 002.

Discharges from the facility are expected to contain five-day carbonaceous biochemical oxygen demand ($CBOD_5$), total suspended solids (TSS), ammonia nitrogen (NH_3-N), and *Escherichia coli.* Additional potential pollutants are included in the Domestic Technical Report 1.0, Section 7. Pollutant Analysis of Treated Effluent and Domestic Worksheet 4.0 in the permit application package. Domestic wastewater is treated by an activated sludge process plant and the treatment units include a bar screen, a grit chamber, aeration basins, final clarifiers, sludge digesters, a belt filter press, chlorine contact chambers and a dechlorination chamber.

Example 3: Domestic Wastewater TPDES New Application

The following summary is provided for this pending water quality permit application being reviewed by the Texas Commission on Environmental Quality as required by 30 Texas Administrative Code Chapter 39. The information provided in this summary may change during the technical review of the application and are not federal enforceable representations of the permit application.

The City of Texas (CN000000000) proposes to operate the City of Texas wastewater treatment plant (RN000000000), an activated sludge process plant operated in the extended aeration mode. The facility will be located at 123 Texas Street, in the City of More Texas, Texas County, Texas 71234.

This application is for a new application to discharge at a daily average flow of 200,000 gallons per day of treated domestic wastewater.

Discharges from the facility are expected to contain five-day carbonaceous biochemical oxygen demand ($CBOD_5$), total suspended solids (TSS), ammonia nitrogen (NH_3-N), and *Escherichia coli.* Additional potential pollutants are included in the Domestic Technical Report 1.0, Section 7. Pollutant Analysis of Treated Effluent in the permit application package. Domestic wastewater will be treated by an activated sludge process plant and the treatment units will include a bar screen, a grit chamber, aeration basins, final clarifiers, sludge digesters, a belt filter press, chlorine contact chambers and a dechlorination chamber.

Example 4: Domestic Wastewater TLAP Renewal application

The following summary is provided for this pending water quality permit application being reviewed by the Texas Commission on Environmental Quality as required by 30 Texas Administrative Code Chapter 39. The information provided in this summary may change during the technical review of the application and are not federal enforceable representations

of the permit application.

The City of Texas (CN000000000) operates the City of Texas wastewater treatment plant (RN000000000), an activated sludge process plant operated in the complete mix mode. The facility is located at 123 Texas Street, near the City of More Texas, Texas County, Texas 71234.

This application is for a renewal to dispose a daily average flow not to exceed 76,500 gallons per day of treated domestic wastewater via public access subsurface drip irrigation system with a minimum area of 32 acres. This permit will not authorize a discharge of pollutants into water in the state.

Land application of domestic wastewater from the facility are expected to contain five-day biochemical oxygen demand (BOD_5), total suspended solids (TSS), and *Escherichia coli.* Additional potential pollutants are included in the Domestic Technical Report 1.0, Section 7. Pollutant Analysis of Treated Effluent in the permit application package. Domestic wastewater is treated by an activated sludge process plant and the treatment units include a bar screen, an equalization basin, an aeration basin, a final clarifier, an aerobic sludge digester, tertiary filters, and a chlorine contact chamber. In addition, the facility includes a temporary storage that equals to at least three days of the daily average flow.

ATTACHMENT M.

PROCESS FLOW DIAGRAM

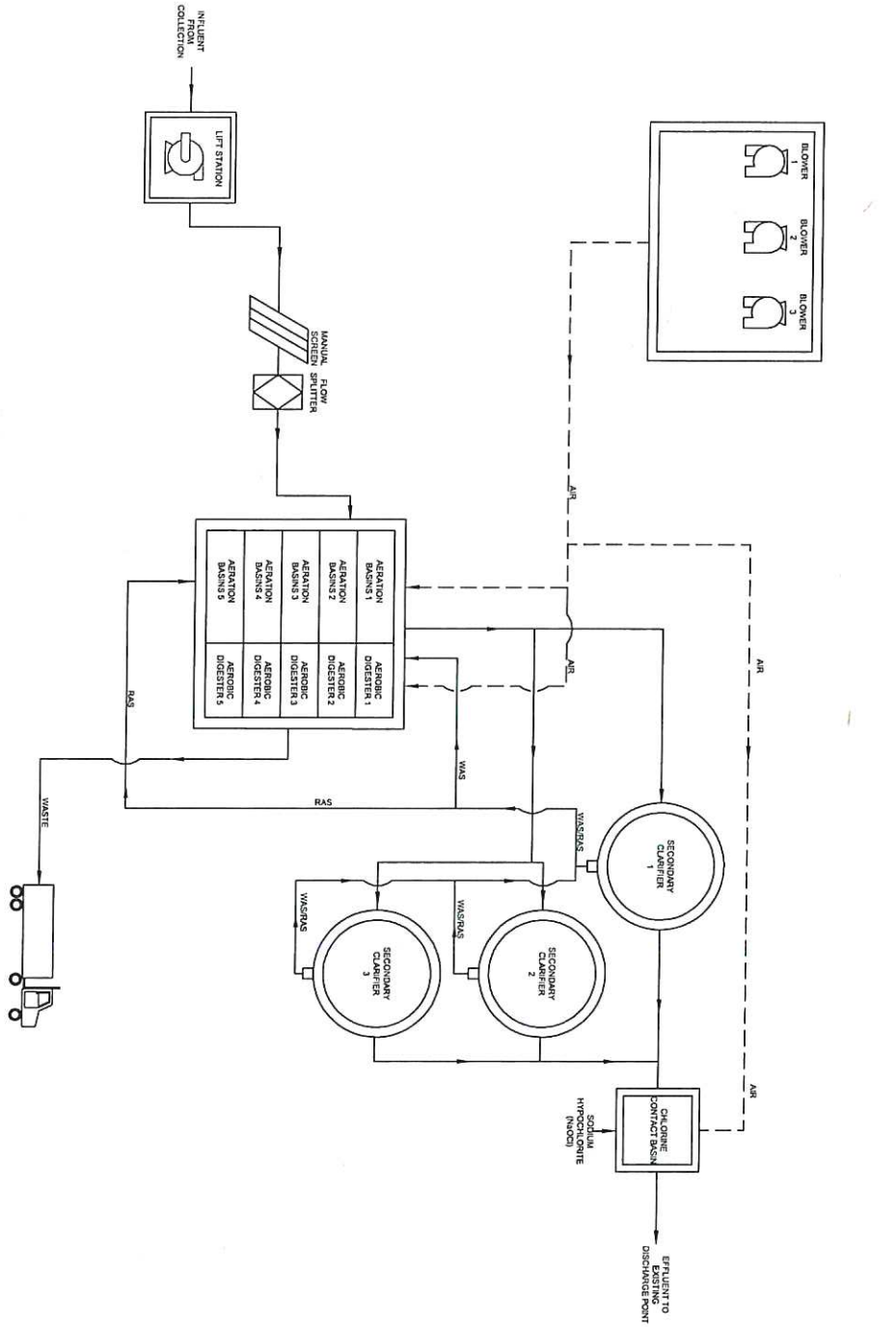

LEGEND
INTERIM PHASE 1

DATE:	JANUARY 2025	
DESIGN:	RED	
DRAWN:	REC	
CHECKED:	RED	
KHA NO.:	067794907	

SHEET

PROCESS FLOW DIAGRAM
INTERIM PHASE I

CITY OF FULSHEAR
WATER RECLAMATION
FACILITY

Kimley»Horn

TEXAS BOARD OF PROFESSIONAL ENGINEERS FIRM REGISTRATION NUMBER: F-928
11700 KATY FWY #500, HOUSTON, TX 77079 (281)-597-9300

No.	Revision	By	Date

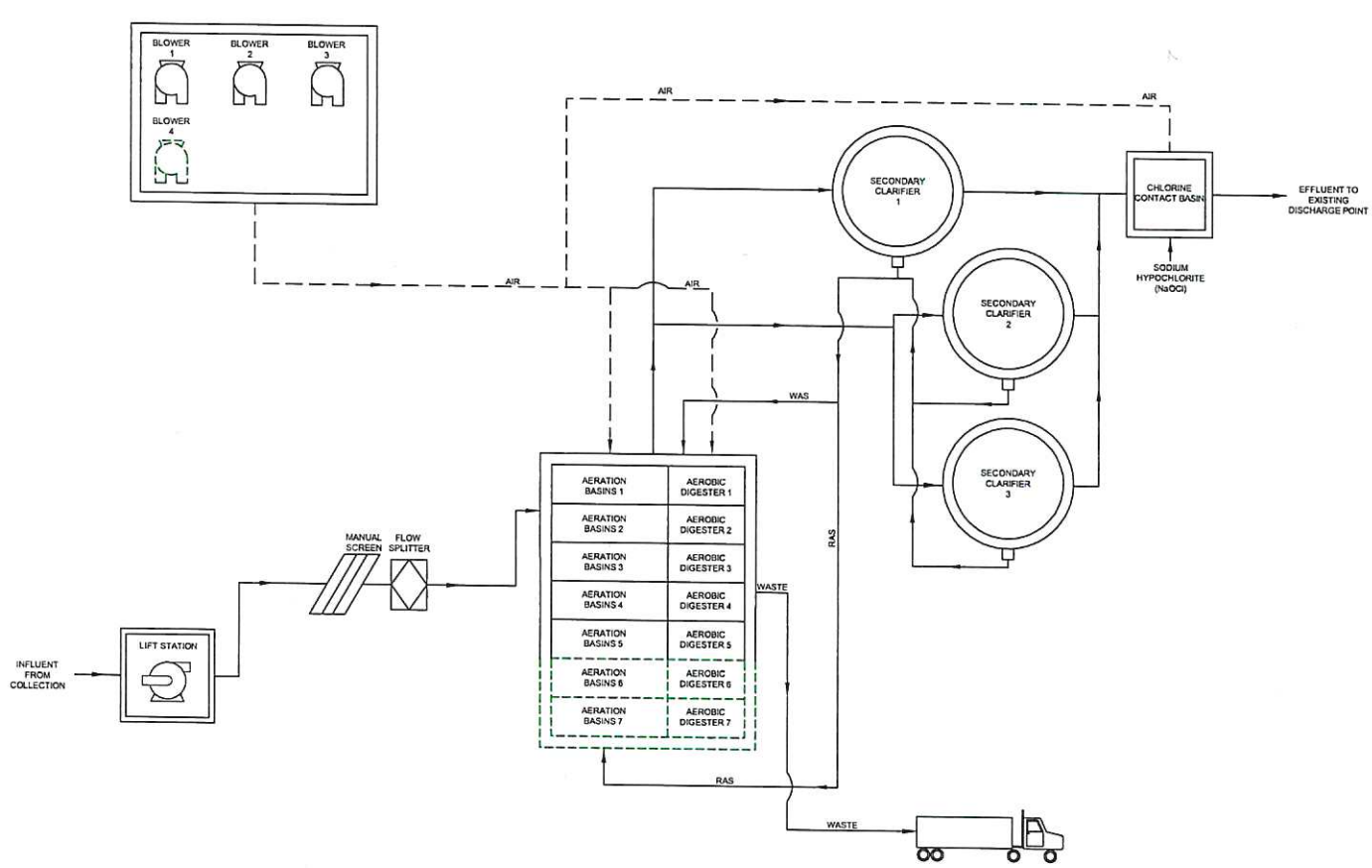

Kimley»Horn

TEXAS BOARD OF PROFESSIONAL ENGINEERS FIRM REGISTRATION NUMBER: F-928
11700 KATY FWY #600, HOUSTON, TX 77079 (281) 597-8300

No.	Revision	By	Date

CITY OF FULSHEAR
WATER RECLAMATION FACILITY

PROCESS FLOW DIAGRAM
EXISTING INTERIM PHASE II

DATE	JANUARY 2025
DESIGN:	RED
DRAWN:	REC
CHECKED:	RED
KHA NO.:	067794507

SHEET

M

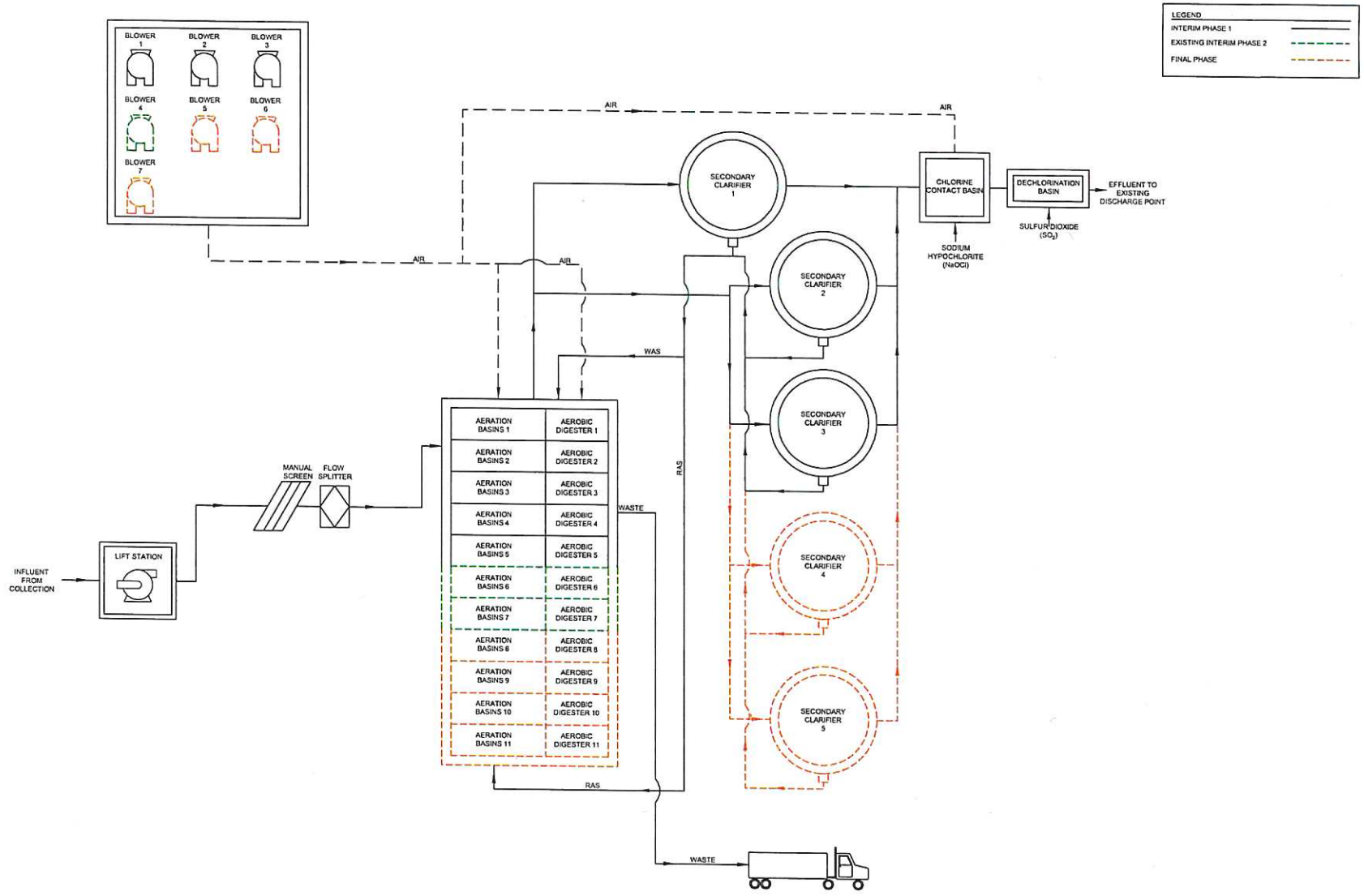

Kimley»Horn

TEXAS BOARD OF PROFESSIONAL ENGINEERS FIRM REGISTRATION NUMBER: F-928
11700 KATY FWY #800, HOUSTON, TX 77079 (281) 597-3232

No.	Revision	By	Date

CITY OF FULSHEAR
WATER RECLAMATION
FACILITY

PROCESS FLOW DIAGRAM
FINAL PHASE

DATE:	JANUARY 2025
DESIGN:	RED
DRAWN:	REC
CHECKED:	RED
KHA NO:	067794907

SHEET

M

K:\HOU_Utilities\067794907_CDF WRF Permit Renewal\03_CAD\02_Exhibits\Process Flow Diagram.dwg 1/10/2025 10:03 AM

ATTACHMENT N.

SITE DRAWING

K:\HOU_Utilities\067794907_COF WRF Permit Renewal\C3_CAD\02_Exhibits\Site Drawing.dwg 1/29/2025 4:08 PM

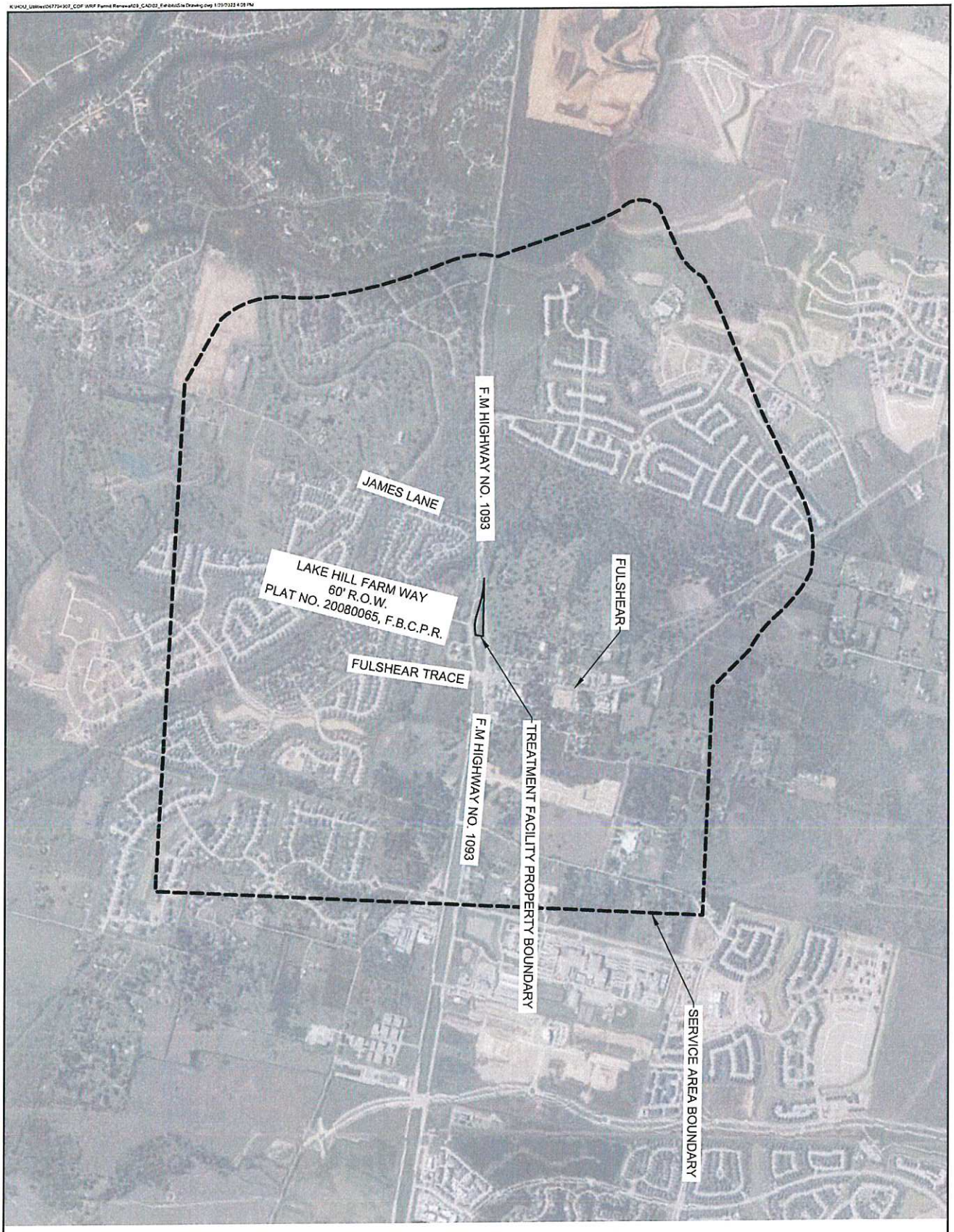

GRAPHIC SCALE IN FEET
0 375 750 1500

NORTH

SHEET	DATE: JANUARY 2025	SITE DRAWING	CITY OF FULSHEAR WATER RECLAMATION FACILITY
	DESIGN: RED		
	DRAWN: REC		
	CHECKED: RED		
	KHA NO.: 067794907		

Kimley»Horn

TEXAS BOARD OF PROFESSIONAL ENGINEERS FIRM REGISTRATION NUMBER: F-928
11700 KATY FWY #500, HOUSTON, TX 77079 (281) 597-5300

No.	Revision	By	Date

Abesha Michael

From: Cancienne, Renee <Renee.Cancienne@kimley-horn.com>
Sent: Friday, February 21, 2025 12:49 PM
To: Abesha Michael
Cc: dmccoy@fulsheartexas.gov; Dominguez, Raul
Subject: RE: Application to Renew Permit No. WQ0013314001 - Notice of Deficiency Letter
Attachments: TCEQ_Transmittal_COF WRF_NODResponse_2025.pdf

Good Afternoon,

Please see the attached PDF for the complete NOD response with the translated Spanish NORI attached.

Thank you,

Renee Cancienne
Kimley-Horn | 11700 Katy Fwy #800 Houston, Tx. 77079
Direct: 346-439-0338

From: Abesha Michael <Abesha.Michael@tceq.texas.gov>
Sent: Friday, February 7, 2025 9:52 AM
To: dmccoy@fulsheartexas.gov
Cc: Dominguez, Raul <Raul.Dominguez@kimley-horn.com>
Subject: Application to Renew Permit No. WQ0013314001 - Notice of Deficiency Letter

Dear Mayor McCoy:

The attached Notice of Deficiency letter sent on February 7, 2025, requests additional information needed to declare the application administratively complete. Please send the complete response to my attention by February 21, 2025.

Thank you,

Abesha H. Michael
Applications Review & Processing Team
Water Quality Division Support Section
Water Quality Division, MC 148
PO Box 13087
Austin, Texas 78711
Phone: o: 512-239-4912
Email: abesha.michael@tceq.texas.gov

How is our customer service? Fill out our online customer satisfaction survey at www.tceq.texas.gov/customersurvey

Kimley»Horn

February 21, 2025

Texas Commission on Environmental Quality
Water Quality Division
Applications Review and Processing Team (MC-148)
Building F, Room 2101
12100 Park 35 Circle
Austin, Texas 78753

RE: ***Discharge Permit for City of Fulshear Water Reclamation Facility – TPDES Permit Renewal***
Permit Number: WQ0013314001
CN: 600700066
RN: 101920932

Dear Abesha H. Michael:

This letter serves to transmit the response to the items requested for the administrative review of the Application to Renew Permit No. WQ0013314001 (EPA I.D. No. TX0101052).

1. The following is a portion of the NORI which contains information relevant to your application. Please read it carefully and indicate if it contains any errors or omissions. The complete notice will be sent to you once the application is declared administratively complete.

   APPLICATION. City of Fulshear, P.O. Box 279, Fulshear Texas 77441, has applied to the Texas Commission on Environmental Quality (TCEQ) to renew Texas Pollutant Discharge Elimination System (TDPES) Permit No. WQ0013314001 (EPA I.D. No. TX0101052) to authorize the discharge of treated wastewater at a volume not to not to exceed an annual average flow of 1,100,000 gallons per day. The domestic wastewater treatment facility is located at 30618 Farm-to-Market Road 1093, in the city of Fulshear, in Fort Bend County, Texas 77441. The discharge route is from the plant site to an unnamed tributary (locally known as Union Chapel Branch); thence to Bessies Creek; thence to Brazos River below Navasota River. TCEQ received this application on January 31, 2025. The permit application will be available for viewing and copying at Fulshear City Hall, City Secretary's Office, 6611 West Cross Creek Bend Lane, Fulshear, Texas prior to the date this notice is published in the newspaper. The application, including any updates, and associated notices are available electronically at the following webpage:
   http://www.tceq.texas.gov/permitting/wastewater/pending-permits/tdpes-applications.
   This link to an electronic map of the site or facility's general location is provided as a public courtesy and not part of the application or notice. For the exact location, refer to the application.
   http://gisweb.tceq.texas.gov/LocationMapper/?marker=-95.902222,29.688888&level=18

   Further information may also be obtained from City of Fulshear at the address stated above or by calling Mr. Raul Dominguez, P.E. Kimley-Horn & Associates, Inc., at 346-439-8113.

The portion of the NORI listed above does not contain any errors or omissions.

2. The application indicates that public notices in Spanish are required. After confirming the portion of the NORI above does not contain any errors or omissions, please use the attached template to translate the NORI into Spanish. Only the first and last paragraphs are unique to this application and require translation. Please provide the translated Spanish NORI in a Microsoft Word document.

The translated Spanish NORI has been provided as a pdf attachment.

If you have any questions regarding this project, please contact me at 346-439-8113.

Sincerely,
KIMLEY-HORN AND ASSOCIATES, INC. Texas Firm No. 928

Raul Dominguez, P.E. (Texas License No. 149364)

\\kimley-horn.com\TS_HOU\HOU_Utilities\061284730_Holiday Villages of Lake Livingston WWTP\06_Permit\TCEQ Response

Comisión de Calidad Ambiental del Estado de Texas

AVISO DE RECIBO DE LA SOLICITUD Y EL INTENTO DE OBTENER PERMISO PARA LA CALIDAD DEL AGUA RENOVACION

PERMISO NO. WQ0013314001

SOLICITUD. La Ciudad de Fulshear, P.O Box 279, Fulshear, Texas 77441 ha solicitado a la Comisión de Calidad Ambiental del Estado de Texas (TCEQ) para renovar el Permiso No. WQ0013314001 (EPA I.D. No. TX 0101052) del Sistema de Eliminación de Descargas de Contaminantes de Texas (TPDES) para autorizar la descarga de aguas residuales tratadas en un volumen que no sobrepasa un flujo promedio diario de 1,100,00 de galones por día. La planta está ubicada en la calle 30618 Farm-to-Market 1093, en la Ciudad de Fulshear, en el Condado de Fort Bend, Texas 77441. La ruta de descarga es del sitio de la planta a un afluente sin nombre (conocido localmente como la rama de Unión Chapel); después al arroyo de Bessie; y después al rio Brazos abajo del rio Navasota. La TCEQ recibió esta solicitud el 31 de Enero del 2025. La solicitud para el permiso está disponible para leerla y copiarla en el ayuntamiento de la ciudad de Fulshear, en la oficina de la secretaria de la Ciudad, localizada en la calle 6611 West Cross Creek Bend Lane, Fulshear, Texas antes de la fecha de publicación de este aviso en el periódico. La solicitud (cualquier actualización y aviso inclusive) está disponible electrónicamente en la siguiente página web: https://www.tceq.texas.gov/permitting/wastewater/pending-permits/tpdes-applications. Este enlace a un mapa electrónico de la ubicación general del sitio o de la instalación es proporcionado como una cortesía y no es parte de la solicitud o del aviso. Para la ubicación exacta, consulte la solicitud. https://gisweb.tceq.texas.gov/LocationMapper/?marker=-95.902222,29.688888&level=18

También se puede obtener información adicional de la Ciudad de Fulshear en la dirección indicada arriba o llamando al Ingeniero Raul Dominguez, P.E., de Kimley-Horn & Associates, Inc., al telefono 346-439-8113

Jon Niermann, *Chairman*
Emily Lindley, *Commissioner*
Bobby Janecka, *Commissioner*
Toby Baker, *Executive Director*

TEXAS COMMISSION ON ENVIRONMENTAL QUALITY

Protecting Texas by Reducing and Preventing Pollution

November 30, 2022

Jack Harper, City Manager
City of Fulshear
P.O. Box 279
Fulshear, Texas 77441

RE: City of Fulshear
Permit No. WQ0013314001

This letter is your notice that the Texas Commission on Environmental Quality (TCEQ) executive director (ED) has acted on the above-named application. According to 30 Texas Administrative Code (TAC) Section 50.135 the ED's action became effective on the date the ED signed the permit or other action. A copy of the final action is enclosed and cites the effective date.

For certain matters, a **motion to overturn**, which is a request that the commission review the executive director's action on an application, may be filed with the chief clerk. Whether a motion to overturn is procedurally available for a specific matter is determined by Title 30 of the Texas Administrative Code Chapter 50. According to 30 TAC Section 50.139, an action by the ED is not affected by a motion to overturn filed under this section unless expressly ordered by the commission.

If a motion to overturn is filed, the motion must be received by the chief clerk within 23 days after the date of this letter. An original and 7 copies of a motion must be filed with the chief clerk in person or by mail. The Chief Clerk's mailing address is Office of the Chief Clerk (MC 105), TCEQ, P.O. Box 13087, Austin, Texas 78711-3087. On the same day the motion is transmitted to the chief clerk, please provide copies to the Environmental Law Deputy Director (MC 173), and the Public Interest Counsel (MC 103), both at the same TCEQ address listed above. If a motion is not acted on by the commission within 45 days after the date of this letter, then the motion shall be deemed overruled.

You may also request **judicial review** of the ED's action. The procedure and timelines for seeking judicial review of a commission or ED action are governed by Texas Water Code Section 5.351.

Individual members of the public may seek further information by calling the TCEQ Public Education Program, toll free, at 1-800-687-4040.

Sincerely,

Laurie Gharis

Laurie Gharis
Chief Clerk

LG/erg

cc: Garrett T. Arthur, TCEQ Public Interest Counsel (MC 103)

TPDES PERMIT NO. WQ0013314001
[For TCEQ office use only - EPA I.D. No. TX0101052]

TEXAS COMMISSION ON ENVIRONMENTAL QUALITY
P.O. Box 13087
Austin, Texas 78711-3087

This major amendment supersedes and replaces TPDES Permit No. WQ0013314001 issued on February 10, 2020.

PERMIT TO DISCHARGE WASTES
under provisions of
Section 402 of the Clean Water Act
and Chapter 26 of the Texas Water Code

City of Fulshear

whose mailing address is

P.O. Box 279
Fulshear, Texas 77441

is authorized to treat and discharge wastes from the City of Fulshear Wastewater Treatment Facility, SIC Code 4952

located at 30618 Farm-to-Market Road 1093, in the City of Fulshear, Fort Bend County, Texas 77441

to an unnamed tributary (locally known as Union Chapel Branch), thence to Bessies Creek, thence to Brazos River Below Navasota River in Segment No. 1202 of the Brazos River Basin

only according to effluent limitations, monitoring requirements, and other conditions set forth in this permit, as well as the rules of the Texas Commission on Environmental Quality (TCEQ), the laws of the State of Texas, and other orders of the TCEQ. The issuance of this permit does not grant to the permittee the right to use private or public property for conveyance of wastewater along the discharge route described in this permit. This includes, but is not limited to, property belonging to any individual, partnership, corporation, or other entity. Neither does this permit authorize any invasion of personal rights nor any violation of federal, state, or local laws or regulations. It is the responsibility of the permittee to acquire property rights as may be necessary to use the discharge route.

This permit shall expire at midnight, **five years from the date of issuance**.

ISSUED DATE: November 14, 2022

For the Commission

INTERIM I EFFLUENT LIMITATIONS AND MONITORING REQUIREMENTS Outfall Number 001

1. During the period beginning upon the date of issuance and lasting through the completion of expansion to the 0.70 million gallons per day (MGD) facility, the permittee is authorized to discharge subject to the following effluent limitations:

   The daily average flow of effluent shall not exceed 0.50 MGD, nor shall the average discharge during any two-hour period (2-hour peak) exceed 1,042 gallons per minute (gpm).

Effluent Characteristic	Discharge Limitations				Min. Self-Monitoring Requirements	
	Daily Avg	7-day Avg	Daily Max	Single Grab	Report Daily Avg. & Daily Max.	
	mg/l (lbs/day)	mg/l	mg/l	mg/l	Measurement Frequency	Sample Type
Flow, MGD	Report	N/A	Report	N/A	Continuous	Totalizing Meter
Carbonaceous Biochemical Oxygen Demand (5-day)	10 (42)	15	25	35	One/week	Composite
Total Suspended Solids	15 (63)	25	40	60	One/week	Composite
Ammonia Nitrogen	3 (13)	6	10	15	One/week	Composite
E. coli, colony-forming units or most probable number per 100 ml	126	N/A	399	N/A	One/month	Grab

2. The effluent shall contain a total chlorine residual of at least 1.0 mg/l and shall not exceed a total chlorine residual of 4.0 mg/l after a detention time of at least 20 minutes (based on peak flow) and shall be monitored daily by grab sample. An equivalent method of disinfection may be substituted only with prior approval of the Executive Director.

3. The pH shall not be less than 6.0 standard units nor greater than 9.0 standard units and shall be monitored twice per month by grab sample.

4. There shall be no discharge of floating solids or visible foam in other than trace amounts and no discharge of visible oil.

5. Effluent monitoring samples shall be taken at the following location(s): Following the final treatment unit.

6. The effluent shall contain a minimum dissolved oxygen of 4.0 mg/l and shall be monitored once per week by grab sample.

INTERIM II EFFLUENT LIMITATIONS AND MONITORING REQUIREMENTS Outfall Number 001

1. During the period beginning upon the completion of expansion to the 0.70 million gallons per day (MGD) facility and lasting through the completion of expansion to the 1.1 MGD facility, the permittee is authorized to discharge subject to the following effluent limitations:

   The annual average flow of effluent shall not exceed 0.70 MGD, nor shall the average discharge during any two-hour period (2-hour peak) exceed 1,458 gallons per minute (gpm).

Effluent Characteristic	Discharge Limitations				Min. Self-Monitoring Requirements	
	Daily Avg mg/l (lbs/day)	7-day Avg mg/l	Daily Max mg/l	Single Grab mg/l	Report Daily Avg. & Daily Max. Measurement Frequency	Sample Type
Flow, MGD	Report	N/A	Report	N/A	Continuous	Totalizing Meter
Carbonaceous Biochemical Oxygen Demand (5-day)	10 (58)	15	25	35	One/week	Composite
Total Suspended Solids	15 (88)	25	40	60	One/week	Composite
Ammonia Nitrogen	3 (18)	6	10	15	One/week	Composite
E. coli, colony-forming units or most probable number per 100 ml	126	N/A	399	N/A	Two/month	Grab

2. The effluent shall contain a total chlorine residual of at least 1.0 mg/l and shall not exceed a total chlorine residual of 4.0 mg/l after a detention time of at least 20 minutes (based on peak flow) and shall be monitored daily by grab sample. An equivalent method of disinfection may be substituted only with prior approval of the Executive Director.

3. The pH shall not be less than 6.0 standard units nor greater than 9.0 standard units and shall be monitored twice per month by grab sample.

4. There shall be no discharge of floating solids or visible foam in other than trace amounts and no discharge of visible oil.

5. Effluent monitoring samples shall be taken at the following location(s): Following the final treatment unit.

6. The effluent shall contain a minimum dissolved oxygen of 4.0 mg/l and shall be monitored once per week by grab sample.

FINAL EFFLUENT LIMITATIONS AND MONITORING REQUIREMENTS Outfall Number 001

1. During the period beginning upon the completion of expansion to the 1.1 million gallons per day (MGD) facility and lasting through the date of expiration, the permittee is authorized to discharge subject to the following effluent limitations:

   The annual average flow of effluent shall not exceed 1.1 MGD, nor shall the average discharge during any two-hour period (2-hour peak) exceed 2,292 gallons per minute (gpm).

Effluent Characteristic	Discharge Limitations				Min. Self-Monitoring Requirements	
	Daily Avg mg/l (lbs/day)	7-day Avg mg/l	Daily Max mg/l	Single Grab mg/l	Report Daily Avg. & Daily Max. Measurement Frequency	Sample Type
Flow, MGD	Report	N/A	Report	N/A	Continuous	Totalizing Meter
Carbonaceous Biochemical Oxygen Demand (5-day)	10 (92)	15	25	35	Two/week	Composite
Total Suspended Solids	15 (138)	25	40	60	Two/week	Composite
Ammonia Nitrogen	3 (28)	6	10	15	Two/week	Composite
E. coli, colony-forming units or most probable number per 100 ml	126	N/A	399	N/A	One/week	Grab

2. The effluent shall contain a total chlorine residual of at least 1.0 mg/l after a detention time of at least 20 minutes (based on peak flow) and shall be monitored daily by grab sample. The permittee shall dechlorinate the chlorinated effluent to less than 0.1 mg/l total chlorine residual and shall monitor total chlorine residual daily by grab sample after the dechlorination process. An equivalent method of disinfection may be substituted only with prior approval of the Executive Director.

3. The pH shall not be less than 6.0 standard units nor greater than 9.0 standard units and shall be monitored once per week by grab sample.

4. There shall be no discharge of floating solids or visible foam in other than trace amounts and no discharge of visible oil.

5. Effluent monitoring samples shall be taken at the following location(s): Following the final treatment unit.

6. The effluent shall contain a minimum dissolved oxygen of 4.0 mg/l and shall be monitored twice per week by grab sample.

7. The annual average flow and maximum 2-hour peak flow shall be reported monthly.

DEFINITIONS AND STANDARD PERMIT CONDITIONS

As required by Title 30 Texas Administrative Code (TAC) Chapter 305, certain regulations appear as standard conditions in waste discharge permits. 30 TAC § 305.121 - 305.129 (relating to Permit Characteristics and Conditions) as promulgated under the Texas Water Code (TWC) §§ 5.103 and 5.105, and the Texas Health and Safety Code (THSC) §§ 361.017 and 361.024(a), establish the characteristics and standards for waste discharge permits, including sewage sludge, and those sections of 40 Code of Federal Regulations (CFR) Part 122 adopted by reference by the Commission. The following text includes these conditions and incorporates them into this permit. All definitions in TWC § 26.001 and 30 TAC Chapter 305 shall apply to this permit and are incorporated by reference. Some specific definitions of words or phrases used in this permit are as follows:

1. Flow Measurements

    a. Annual average flow - the arithmetic average of all daily flow determinations taken within the preceding 12 consecutive calendar months. The annual average flow determination shall consist of daily flow volume determinations made by a totalizing meter, charted on a chart recorder and limited to major domestic wastewater discharge facilities with one million gallons per day or greater permitted flow.

    b. Daily average flow - the arithmetic average of all determinations of the daily flow within a period of one calendar month. The daily average flow determination shall consist of determinations made on at least four separate days. If instantaneous measurements are used to determine the daily flow, the determination shall be the arithmetic average of all instantaneous measurements taken during that month. Daily average flow determination for intermittent discharges shall consist of a minimum of three flow determinations on days of discharge.

    c. Daily maximum flow - the highest total flow for any 24-hour period in a calendar month.

    d. Instantaneous flow - the measured flow during the minimum time required to interpret the flow measuring device.

    e. 2-hour peak flow (domestic wastewater treatment plants) - the maximum flow sustained for a two-hour period during the period of daily discharge. The average of multiple measurements of instantaneous maximum flow within a two-hour period may be used to calculate the 2-hour peak flow.

    f. Maximum 2-hour peak flow (domestic wastewater treatment plants) - the highest 2-hour peak flow for any 24-hour period in a calendar month.

2. Concentration Measurements

    a. Daily average concentration - the arithmetic average of all effluent samples, composite or grab as required by this permit, within a period of one calendar month, consisting of at least four separate representative measurements.

        i. For domestic wastewater treatment plants - When four samples are not available in a calendar month, the arithmetic average (weighted by flow) of all values in the previous four consecutive month period consisting of at least four measurements shall be utilized as the daily average concentration.

ii. For all other wastewater treatment plants - When four samples are not available in a calendar month, the arithmetic average (weighted by flow) of all values taken during the month shall be utilized as the daily average concentration.

b. 7-day average concentration - the arithmetic average of all effluent samples, composite or grab as required by this permit, within a period of one calendar week, Sunday through Saturday.

c. Daily maximum concentration - the maximum concentration measured on a single day, by the sample type specified in the permit, within a period of one calendar month.

d. Daily discharge - the discharge of a pollutant measured during a calendar day or any 24-hour period that reasonably represents the calendar day for purposes of sampling. For pollutants with limitations expressed in terms of mass, the daily discharge is calculated as the total mass of the pollutant discharged over the sampling day. For pollutants with limitations expressed in other units of measurement, the daily discharge is calculated as the average measurement of the pollutant over the sampling day.

   The daily discharge determination of concentration made using a composite sample shall be the concentration of the composite sample. When grab samples are used, the daily discharge determination of concentration shall be the arithmetic average (weighted by flow value) of all samples collected during that day.

e. Bacteria concentration (*E. coli* or Enterococci) - Colony Forming Units (CFU) or Most Probable Number (MPN) of bacteria per 100 milliliters effluent. The daily average bacteria concentration is a geometric mean of the values for the effluent samples collected in a calendar month. The geometric mean shall be determined by calculating the nth root of the product of all measurements made in a calendar month, where n equals the number of measurements made; or, computed as the antilogarithm of the arithmetic mean of the logarithms of all measurements made in a calendar month. For any measurement of bacteria equaling zero, a substituted value of one shall be made for input into either computation method. If specified, the 7-day average for bacteria is the geometric mean of the values for all effluent samples collected during a calendar week.

f. Daily average loading (lbs/day) - the arithmetic average of all daily discharge loading calculations during a period of one calendar month. These calculations must be made for each day of the month that a parameter is analyzed. The daily discharge, in terms of mass (lbs/day), is calculated as (Flow, MGD x Concentration, mg/l x 8.34).

g. Daily maximum loading (lbs/day) - the highest daily discharge, in terms of mass (lbs/day), within a period of one calendar month.

3. Sample Type

a. Composite sample - For domestic wastewater, a composite sample is a sample made up of a minimum of three effluent portions collected in a continuous 24-hour period or during the period of daily discharge if less than 24 hours, and combined in volumes proportional to flow, and collected at the intervals required by 30 TAC § 319.9 (a). For industrial wastewater, a composite sample is a sample made up of a minimum of three effluent portions collected in a continuous 24-hour period or during the period of daily discharge if less than 24 hours, and combined in volumes proportional to flow, and collected at the intervals required by 30 TAC § 319.9 (b).

b. Grab sample - an individual sample collected in less than 15 minutes.

4. Treatment Facility (facility) - wastewater facilities used in the conveyance, storage, treatment, recycling, reclamation and/or disposal of domestic sewage, industrial wastes, agricultural wastes, recreational wastes, or other wastes including sludge handling or disposal facilities under the jurisdiction of the Commission.

5. The term "sewage sludge" is defined as solid, semi-solid, or liquid residue generated during the treatment of domestic sewage in 30 TAC Chapter 312. This includes the solids that have not been classified as hazardous waste separated from wastewater by unit processes.

6. The term "biosolids" is defined as sewage sludge that has been tested or processed to meet Class A, Class AB, or Class B pathogen standards in 30 TAC Chapter 312 for beneficial use.

7. Bypass - the intentional diversion of a waste stream from any portion of a treatment facility.

MONITORING AND REPORTING REQUIREMENTS

1. Self-Reporting

Monitoring results shall be provided at the intervals specified in the permit. Unless otherwise specified in this permit or otherwise ordered by the Commission, the permittee shall conduct effluent sampling and reporting in accordance with 30 TAC §§ 319.4 - 319.12. Unless otherwise specified, effluent monitoring data shall be submitted each month, to the Compliance Monitoring Team of the Enforcement Division (MC 224), by the 20th day of the following month for each discharge which is described by this permit whether or not a discharge is made for that month. Monitoring results must be submitted online using the NetDMR reporting system available through the TCEQ website unless the permittee requests and obtains an electronic reporting waiver. Monitoring results must be signed and certified as required by Monitoring and Reporting Requirements No. 10.

As provided by state law, the permittee is subject to administrative, civil and criminal penalties, as applicable, for negligently or knowingly violating the Clean Water Act (CWA); TWC §§ 26, 27, and 28; and THSC § 361, including but not limited to knowingly making any false statement, representation, or certification on any report, record, or other document submitted or required to be maintained under this permit, including monitoring reports or reports of compliance or noncompliance, or falsifying, tampering with or knowingly rendering inaccurate any monitoring device or method required by this permit or violating any other requirement imposed by state or federal regulations.

2. Test Procedures

a. Unless otherwise specified in this permit, test procedures for the analysis of pollutants shall comply with procedures specified in 30 TAC §§ 319.11 - 319.12. Measurements, tests, and calculations shall be accurately accomplished in a representative manner.

b. All laboratory tests submitted to demonstrate compliance with this permit must meet the requirements of 30 TAC § 25, Environmental Testing Laboratory Accreditation and Certification.

3. Records of Results

a. Monitoring samples and measurements shall be taken at times and in a manner so as to be representative of the monitored activity.

b. Except for records of monitoring information required by this permit related to the permittee's sewage sludge or biosolids use and disposal activities, which shall be retained for a period of at least five years (or longer as required by 40 CFR Part 503), monitoring and reporting records, including strip charts and records of calibration and maintenance, copies of all records required by this permit, records of all data used to complete the application for this permit, and the certification required by 40 CFR § 264.73(b)(9) shall be retained at the facility site, or shall be readily available for review by a TCEQ representative for a period of three years from the date of the record or sample, measurement, report, application or certification. This period shall be extended at the request of the Executive Director.

c. Records of monitoring activities shall include the following:

   i. date, time and place of sample or measurement;

   ii. identity of individual who collected the sample or made the measurement.

   iii. date and time of analysis;

   iv. identity of the individual and laboratory who performed the analysis;

   v. the technique or method of analysis; and

   vi. the results of the analysis or measurement and quality assurance/quality control records.

   The period during which records are required to be kept shall be automatically extended to the date of the final disposition of any administrative or judicial enforcement action that may be instituted against the permittee.

4. Additional Monitoring by Permittee

   If the permittee monitors any pollutant at the location(s) designated herein more frequently than required by this permit using approved analytical methods as specified above, all results of such monitoring shall be included in the calculation and reporting of the values submitted on the approved self-report form. Increased frequency of sampling shall be indicated on the self-report form.

5. Calibration of Instruments

   All automatic flow measuring or recording devices and all totalizing meters for measuring flows shall be accurately calibrated by a trained person at plant start-up and as often thereafter as necessary to ensure accuracy, but not less often than annually unless authorized by the Executive Director for a longer period. Such person shall verify in writing that the device is operating properly and giving accurate results. Copies of the verification shall be retained at the facility site and/or shall be readily available for review by a TCEQ representative for a period of three years.

6. Compliance Schedule Reports

   Reports of compliance or noncompliance with, or any progress reports on, interim and final requirements contained in any compliance schedule of the permit shall be submitted no later than 14 days following each schedule date to the Regional Office and the Compliance Monitoring Team of the Enforcement Division (MC 224).

7. Noncompliance Notification

   a. In accordance with 30 TAC § 305.125(9) any noncompliance which may endanger human health or safety, or the environment shall be reported by the permittee to the TCEQ. Except as allowed by 30 TAC § 305.132, report of such information shall be provided orally or by facsimile transmission (FAX) to the Regional Office within 24 hours of becoming aware of the noncompliance. A written submission of such information shall also be provided by the permittee to the Regional Office and the Compliance Monitoring Team of the Enforcement Division (MC 224) within five working days of becoming aware of the noncompliance. For Publicly Owned Treatment Works (POTWs), effective December 21, 2025, the permittee must submit the written report for unauthorized discharges and unanticipated bypasses that exceed any effluent limit in the permit using the online electronic reporting system available through the TCEQ website unless the permittee requests and obtains an electronic reporting waiver. The written submission shall contain a description of the noncompliance and its cause; the potential danger to human health or safety, or the environment; the period of noncompliance, including exact dates and times; if the noncompliance has not been corrected, the time it is expected to continue; and steps taken or planned to reduce, eliminate, and prevent recurrence of the noncompliance, and to mitigate its adverse effects.

   b. The following violations shall be reported under Monitoring and Reporting Requirement 7.a.:

      i. Unauthorized discharges as defined in Permit Condition 2(g).

      ii. Any unanticipated bypass that exceeds any effluent limitation in the permit.

      iii. Violation of a permitted maximum daily discharge limitation for pollutants listed specifically in the Other Requirements section of an Industrial TPDES permit.

   c. In addition to the above, any effluent violation which deviates from the permitted effluent limitation by more than 40% shall be reported by the permittee in writing to the Regional Office and the Compliance Monitoring Team of the Enforcement Division (MC 224) within 5 working days of becoming aware of the noncompliance.

   d. Any noncompliance other than that specified in this section, or any required information not submitted or submitted incorrectly, shall be reported to the Compliance Monitoring Team of the Enforcement Division (MC 224) as promptly as possible. For effluent limitation violations, noncompliances shall be reported on the approved self-report form.

8. In accordance with the procedures described in 30 TAC §§ 35.301 - 35.303 (relating to Water Quality Emergency and Temporary Orders) if the permittee knows in advance of the need for a bypass, it shall submit prior notice by applying for such authorization.

9. Changes in Discharges of Toxic Substances

   All existing manufacturing, commercial, mining, and silvicultural permittees shall notify the Regional Office, orally or by facsimile transmission within 24 hours, and both the Regional Office and the Compliance Monitoring Team of the Enforcement Division (MC 224) in writing within five (5) working days, after becoming aware of or having reason to believe:

a. That any activity has occurred or will occur which would result in the discharge, on a routine or frequent basis, of any toxic pollutant listed at 40 CFR Part 122, Appendix D, Tables II and III (excluding Total Phenols) which is not limited in the permit, if that discharge will exceed the highest of the following "notification levels":

   i. One hundred micrograms per liter (100 µg/L);

   ii. Two hundred micrograms per liter (200 µg/L) for acrolein and acrylonitrile; five hundred micrograms per liter (500 µg/L) for 2,4-dinitrophenol and for 2-methyl-4,6-dinitrophenol; and one milligram per liter (1 mg/L) for antimony;

   iii. Five (5) times the maximum concentration value reported for that pollutant in the permit application; or

   iv. The level established by the TCEQ.

b. That any activity has occurred or will occur which would result in any discharge, on a nonroutine or infrequent basis, of a toxic pollutant which is not limited in the permit, if that discharge will exceed the highest of the following "notification levels":

   i. Five hundred micrograms per liter (500 µg/L);

   ii. One milligram per liter (1 mg/L) for antimony;

   iii. Ten (10) times the maximum concentration value reported for that pollutant in the permit application; or

   iv. The level established by the TCEQ.

10. Signatories to Reports

    All reports and other information requested by the Executive Director shall be signed by the person and in the manner required by 30 TAC § 305.128 (relating to Signatories to Reports).

11. All POTWs must provide adequate notice to the Executive Director of the following:

    a. Any new introduction of pollutants into the POTW from an indirect discharger which would be subject to CWA § 301 or § 306 if it were directly discharging those pollutants;

    b. Any substantial change in the volume or character of pollutants being introduced into that POTW by a source introducing pollutants into the POTW at the time of issuance of the permit; and

    c. For the purpose of this paragraph, adequate notice shall include information on:

       i. The quality and quantity of effluent introduced into the POTW; and

       ii. Any anticipated impact of the change on the quantity or quality of effluent to be discharged from the POTW.

PERMIT CONDITIONS

1. General

   a. When the permittee becomes aware that it failed to submit any relevant facts in a permit application or submitted incorrect information in an application or in any report to the Executive Director, it shall promptly submit such facts or information.

   b. This permit is granted on the basis of the information supplied and representations made by the permittee during action on an application and relying upon the accuracy and completeness of that information and those representations. After notice and opportunity for a hearing, this permit may be modified, suspended, or revoked, in whole or in part, in accordance with 30 TAC Chapter 305, Subchapter D, during its term for good cause including, but not limited to, the following:

      i. Violation of any terms or conditions of this permit;

      ii. Obtaining this permit by misrepresentation or failure to disclose fully all relevant facts; or

      iii. A change in any condition that requires either a temporary or permanent reduction or elimination of the authorized discharge.

   c. The permittee shall furnish to the Executive Director, upon request and within a reasonable time, any information to determine whether cause exists for amending, revoking, suspending or terminating the permit. The permittee shall also furnish to the Executive Director, upon request, copies of records required to be kept by the permit.

2. Compliance

   a. Acceptance of the permit by the person to whom it is issued constitutes acknowledgment and agreement that such person will comply with all the terms and conditions embodied in the permit, and the rules and other orders of the Commission.

   b. The permittee has a duty to comply with all conditions of the permit. Failure to comply with any permit condition constitutes a violation of the permit and the Texas Water Code or the Texas Health and Safety Code, and is grounds for enforcement action, for permit amendment, revocation, or suspension, or for denial of a permit renewal application or an application for a permit for another facility.

   c. It shall not be a defense for a permittee in an enforcement action that it would have been necessary to halt or reduce the permitted activity in order to maintain compliance with the conditions of the permit.

   d. The permittee shall take all reasonable steps to minimize or prevent any discharge or sludge use or disposal or other permit violation that has a reasonable likelihood of adversely affecting human health or the environment.

   e. Authorization from the Commission is required before beginning any change in the permitted facility or activity that may result in noncompliance with any permit requirements.

f. A permit may be amended, suspended and reissued, or revoked for cause in accordance with 30 TAC §§ 305.62 and 305.66 and TWC§ 7.302. The filing of a request by the permittee for a permit amendment, suspension and reissuance, or termination, or a notification of planned changes or anticipated noncompliance, does not stay any permit condition.

g. There shall be no unauthorized discharge of wastewater or any other waste. For the purpose of this permit, an unauthorized discharge is considered to be any discharge of wastewater into or adjacent to water in the state at any location not permitted as an outfall or otherwise defined in the Other Requirements section of this permit.

h. In accordance with 30 TAC § 305.535(a), the permittee may allow any bypass to occur from a TPDES permitted facility which does not cause permitted effluent limitations to be exceeded or an unauthorized discharge to occur, but only if the bypass is also for essential maintenance to assure efficient operation.

i. The permittee is subject to administrative, civil, and criminal penalties, as applicable, under TWC §§ 7.051 - 7.075 (relating to Administrative Penalties), 7.101 - 7.111 (relating to Civil Penalties), and 7.141 - 7.202 (relating to Criminal Offenses and Penalties) for violations including, but not limited to, negligently or knowingly violating the federal CWA §§ 301, 302, 306, 307, 308, 318, or 405, or any condition or limitation implementing any sections in a permit issued under the CWA § 402, or any requirement imposed in a pretreatment program approved under the CWA §§ 402 (a)(3) or 402 (b)(8).

3. Inspections and Entry

a. Inspection and entry shall be allowed as prescribed in the TWC Chapters 26, 27, and 28, and THSC § 361.

b. The members of the Commission and employees and agents of the Commission are entitled to enter any public or private property at any reasonable time for the purpose of inspecting and investigating conditions relating to the quality of water in the state or the compliance with any rule, regulation, permit or other order of the Commission. Members, employees, or agents of the Commission and Commission contractors are entitled to enter public or private property at any reasonable time to investigate or monitor or, if the responsible party is not responsive or there is an immediate danger to public health or the environment, to remove or remediate a condition related to the quality of water in the state. Members, employees, Commission contractors, or agents acting under this authority who enter private property shall observe the establishment's rules and regulations concerning safety, internal security, and fire protection, and if the property has management in residence, shall notify management or the person then in charge of his presence and shall exhibit proper credentials. If any member, employee, Commission contractor, or agent is refused the right to enter in or on public or private property under this authority, the Executive Director may invoke the remedies authorized in TWC § 7.002. The statement above, that Commission entry shall occur in accordance with an establishment's rules and regulations concerning safety, internal security, and fire protection, is not grounds for denial or restriction of entry to any part of the facility, but merely describes the Commission's duty to observe appropriate rules and regulations during an inspection.

4. Permit Amendment and/or Renewal

   a. The permittee shall give notice to the Executive Director as soon as possible of any planned physical alterations or additions to the permitted facility if such alterations or additions would require a permit amendment or result in a violation of permit requirements. Notice shall also be required under this paragraph when:

      i. The alteration or addition to a permitted facility may meet one of the criteria for determining whether a facility is a new source in accordance with 30 TAC § 305.534 (relating to New Sources and New Dischargers); or

      ii. The alteration or addition could significantly change the nature or increase the quantity of pollutants discharged. This notification applies to pollutants that are subject neither to effluent limitations in the permit, nor to notification requirements in Monitoring and Reporting Requirements No. 9; or

      iii. The alteration or addition results in a significant change in the permittee's sludge use or disposal practices, and such alteration, addition, or change may justify the application of permit conditions that are different from or absent in the existing permit, including notification of additional use or disposal sites not reported during the permit application process or not reported pursuant to an approved land application plan.

   b. Prior to any facility modifications, additions, or expansions that will increase the plant capacity beyond the permitted flow, the permittee must apply for and obtain proper authorization from the Commission before commencing construction.

   c. The permittee must apply for an amendment or renewal at least 180 days prior to expiration of the existing permit in order to continue a permitted activity after the expiration date of the permit. If an application is submitted prior to the expiration date of the permit, the existing permit shall remain in effect until the application is approved, denied, or returned. If the application is returned or denied, authorization to continue such activity shall terminate upon the effective date of the action. If an application is not submitted prior to the expiration date of the permit, the permit shall expire and authorization to continue such activity shall terminate.

   d. Prior to accepting or generating wastes which are not described in the permit application, or which would result in a significant change in the quantity or quality of the existing discharge, the permittee must report the proposed changes to the Commission. The permittee must apply for a permit amendment reflecting any necessary changes in permit conditions, including effluent limitations for pollutants not identified and limited by this permit.

   e. In accordance with the TWC § 26.029(b), after a public hearing, notice of which shall be given to the permittee, the Commission may require the permittee, from time to time, for good cause, in accordance with applicable laws, to conform to new or additional conditions.

f. If any toxic effluent standard or prohibition (including any schedule of compliance specified in such effluent standard or prohibition) is promulgated under CWA § 307(a) for a toxic pollutant which is present in the discharge and that standard or prohibition is more stringent than any limitation on the pollutant in this permit, this permit shall be modified or revoked and reissued to conform to the toxic effluent standard or prohibition. The permittee shall comply with effluent standards or prohibitions established under CWA § 307(a) for toxic pollutants within the time provided in the regulations that established those standards or prohibitions, even if the permit has not yet been modified to incorporate the requirement.

5. Permit Transfer

a. Prior to any transfer of this permit, Commission approval must be obtained. The Commission shall be notified in writing of any change in control or ownership of facilities authorized by this permit. Such notification should be sent to the Applications Review and Processing Team (MC 148) of the Water Quality Division.

b. A permit may be transferred only according to the provisions of 30 TAC § 305.64 (relating to Transfer of Permits) and 30 TAC § 50.133 (relating to Executive Director Action on Application or WQMP update).

6. Relationship to Hazardous Waste Activities

This permit does not authorize any activity of hazardous waste storage, processing, or disposal that requires a permit or other authorization pursuant to the Texas Health and Safety Code.

7. Relationship to Water Rights

Disposal of treated effluent by any means other than discharge directly to water in the state must be specifically authorized in this permit and may require a permit pursuant to TWC Chapter 11.

8. Property Rights

A permit does not convey any property rights of any sort, or any exclusive privilege.

9. Permit Enforceability

The conditions of this permit are severable, and if any provision of this permit, or the application of any provision of this permit to any circumstances, is held invalid, the application of such provision to other circumstances, and the remainder of this permit, shall not be affected thereby.

10. Relationship to Permit Application

The application pursuant to which the permit has been issued is incorporated herein; provided, however, that in the event of a conflict between the provisions of this permit and the application, the provisions of the permit shall control.

11. Notice of Bankruptcy

    a. Each permittee shall notify the Executive Director, in writing, immediately following the filing of a voluntary or involuntary petition for bankruptcy under any chapter of Title 11 (Bankruptcy) of the United States Code (11 USC) by or against:

        i. the permittee;

        ii. an entity (as that term is defined in 11 USC, § 101(14)) controlling the permittee or listing the permit or permittee as property of the estate; or

        iii. an affiliate (as that term is defined in 11 USC, § 101(2)) of the permittee.

    b. This notification must indicate:

        i. the name of the permittee;

        ii. the permit number(s);

        iii. the bankruptcy court in which the petition for bankruptcy was filed; and

        iv. the date of filing of the petition.

OPERATIONAL REQUIREMENTS

1. The permittee shall at all times ensure that the facility and all of its systems of collection, treatment, and disposal are properly operated and maintained. This includes, but is not limited to, the regular, periodic examination of wastewater solids within the treatment plant by the operator in order to maintain an appropriate quantity and quality of solids inventory as described in the various operator training manuals and according to accepted industry standards for process control. Process control, maintenance, and operations records shall be retained at the facility site, or shall be readily available for review by a TCEQ representative, for a period of three years.

2. Upon request by the Executive Director, the permittee shall take appropriate samples and provide proper analysis in order to demonstrate compliance with Commission rules. Unless otherwise specified in this permit or otherwise ordered by the Commission, the permittee shall comply with all applicable provisions of 30 TAC Chapter 312 concerning sewage sludge or biosolids use and disposal and 30 TAC §§ 319.21 - 319.29 concerning the discharge of certain hazardous metals.

3. Domestic wastewater treatment facilities shall comply with the following provisions:

    a. The permittee shall notify the Municipal Permits Team, Wastewater Permitting Section (MC 148) of the Water Quality Division, in writing, of any facility expansion at least 90 days prior to conducting such activity.

    b. The permittee shall submit a closure plan for review and approval to the Municipal Permits Team, Wastewater Permitting Section (MC 148) of the Water Quality Division, for any closure activity at least 90 days prior to conducting such activity. Closure is the act of permanently taking a waste management unit or treatment facility out of service and includes the permanent removal from service of any pit, tank, pond, lagoon, surface impoundment and/or other treatment unit regulated by this permit.

4. The permittee is responsible for installing prior to plant start-up, and subsequently maintaining, adequate safeguards to prevent the discharge of untreated or inadequately treated wastes during electrical power failures by means of alternate power sources, standby generators, and/or retention of inadequately treated wastewater.

5. Unless otherwise specified, the permittee shall provide a readily accessible sampling point and, where applicable, an effluent flow measuring device or other acceptable means by which effluent flow may be determined.

6. The permittee shall remit an annual water quality fee to the Commission as required by 30 TAC Chapter 21. Failure to pay the fee may result in revocation of this permit under TWC § 7.302(b)(6).

7. Documentation

   For all written notifications to the Commission required of the permittee by this permit, the permittee shall keep and make available a copy of each such notification under the same conditions as self-monitoring data are required to be kept and made available. Except for information required for TPDES permit applications, effluent data, including effluent data in permits, draft permits and permit applications, and other information specified as not confidential in 30 TAC §§ 1.5(d), any information submitted pursuant to this permit may be claimed as confidential by the submitter. Any such claim must be asserted in the manner prescribed in the application form or by stamping the words confidential business information on each page containing such information. If no claim is made at the time of submission, information may be made available to the public without further notice. If the Commission or Executive Director agrees with the designation of confidentiality, the TCEQ will not provide the information for public inspection unless required by the Texas Attorney General or a court pursuant to an open records request. If the Executive Director does not agree with the designation of confidentiality, the person submitting the information will be notified.

8. Facilities that generate domestic wastewater shall comply with the following provisions; domestic wastewater treatment facilities at permitted industrial sites are excluded.

   a. Whenever flow measurements for any domestic sewage treatment facility reach 75% of the permitted daily average or annual average flow for three consecutive months, the permittee must initiate engineering and financial planning for expansion and/or upgrading of the domestic wastewater treatment and/or collection facilities. Whenever the flow reaches 90% of the permitted daily average or annual average flow for three consecutive months, the permittee shall obtain necessary authorization from the Commission to commence construction of the necessary additional treatment and/or collection facilities. In the case of a domestic wastewater treatment facility which reaches 75% of the permitted daily average or annual average flow for three consecutive months, and the planned population to be served or the quantity of waste produced is not expected to exceed the design limitations of the treatment facility, the permittee shall submit an engineering report supporting this claim to the Executive Director of the Commission.

      If in the judgment of the Executive Director the population to be served will not cause permit noncompliance, then the requirement of this section may be waived. To be

effective, any waiver must be in writing and signed by the Director of the Enforcement Division (MC 219) of the Commission, and such waiver of these requirements will be reviewed upon expiration of the existing permit; however, any such waiver shall not be interpreted as condoning or excusing any violation of any permit parameter.

b. The plans and specifications for domestic sewage collection and treatment works associated with any domestic permit must be approved by the Commission and failure to secure approval before commencing construction of such works or making a discharge is a violation of this permit and each day is an additional violation until approval has been secured.

c. Permits for domestic wastewater treatment plants are granted subject to the policy of the Commission to encourage the development of area-wide waste collection, treatment, and disposal systems. The Commission reserves the right to amend any domestic wastewater permit in accordance with applicable procedural requirements to require the system covered by this permit to be integrated into an area-wide system, should such be developed; to require the delivery of the wastes authorized to be collected in, treated by or discharged from said system, to such area-wide system; or to amend this permit in any other particular to effectuate the Commission's policy. Such amendments may be made when the changes required are advisable for water quality control purposes and are feasible on the basis of waste treatment technology, engineering, financial, and related considerations existing at the time the changes are required, exclusive of the loss of investment in or revenues from any then existing or proposed waste collection, treatment or disposal system.

9. Domestic wastewater treatment plants shall be operated and maintained by sewage plant operators holding a valid certificate of competency at the required level as defined in 30 TAC Chapter 30.

10. For Publicly Owned Treatment Works (POTWs), the 30-day average (or monthly average) percent removal for BOD and TSS shall not be less than 85%, unless otherwise authorized by this permit.

11. Facilities that generate industrial solid waste as defined in 30 TAC § 335.1 shall comply with these provisions:

a. Any solid waste, as defined in 30 TAC § 335.1 (including but not limited to such wastes as garbage, refuse, sludge from a waste treatment, water supply treatment plant or air pollution control facility, discarded materials, discarded materials to be recycled, whether the waste is solid, liquid, or semisolid), generated by the permittee during the management and treatment of wastewater, must be managed in accordance with all applicable provisions of 30 TAC Chapter 335, relating to Industrial Solid Waste Management.

b. Industrial wastewater that is being collected, accumulated, stored, or processed before discharge through any final discharge outfall, specified by this permit, is considered to be industrial solid waste until the wastewater passes through the actual point source discharge and must be managed in accordance with all applicable provisions of 30 TAC Chapter 335.

c. The permittee shall provide written notification, pursuant to the requirements of 30 TAC § 335.8(b)(1), to the Corrective Action Section (MC 127) of the Remediation Division

informing the Commission of any closure activity involving an Industrial Solid Waste Management Unit, at least 90 days prior to conducting such an activity.

d. Construction of any industrial solid waste management unit requires the prior written notification of the proposed activity to the Registration and Reporting Section (MC 129) of the Permitting and Registration Support Division. No person shall dispose of industrial solid waste, including sludge or other solids from wastewater treatment processes, prior to fulfilling the deed recordation requirements of 30 TAC § 335.5.

e. The term "industrial solid waste management unit" means a landfill, surface impoundment, waste-pile, industrial furnace, incinerator, cement kiln, injection well, container, drum, salt dome waste containment cavern, or any other structure vessel, appurtenance, or other improvement on land used to manage industrial solid waste.

f. The permittee shall keep management records for all sludge (or other waste) removed from any wastewater treatment process. These records shall fulfill all applicable requirements of 30 TAC § 335 and must include the following, as it pertains to wastewater treatment and discharge:

   i. Volume of waste and date(s) generated from treatment process;
   ii. Volume of waste disposed of on-site or shipped off-site;
   iii. Date(s) of disposal;
   iv. Identity of hauler or transporter;
   v. Location of disposal site; and
   vi. Method of final disposal.

   The above records shall be maintained on a monthly basis. The records shall be retained at the facility site or shall be readily available for review by authorized representatives of the TCEQ for at least five years.

12. For industrial facilities to which the requirements of 30 TAC § 335 do not apply, sludge and solid wastes, including tank cleaning and contaminated solids for disposal, shall be disposed of in accordance with THSC § 361.

TCEQ Revision 06/2020

SLUDGE PROVISIONS

The permittee is authorized to dispose of sludge only at a Texas Commission on Environmental Quality (TCEQ) authorized land application site, co-disposal landfill, wastewater treatment facility, or facility that further processes sludge. **The disposal of sludge or biosolids by land application on property owned, leased or under the direct control of the permittee is a violation of the permit unless the site is authorized with the TCEQ. This provision does not authorize Distribution and Marketing of Class A or Class AB Biosolids. This provision does not authorize the permittee to land apply biosolids on property owned, leased or under the direct control of the permittee.**

SECTION I. REQUIREMENTS APPLYING TO ALL SEWAGE SLUDGE OR BIOSOLIDS LAND APPLICATION

A. General Requirements

1. The permittee shall handle and dispose of sewage sludge or biosolids in accordance with 30 TAC § 312 and all other applicable state and federal regulations in a manner that protects public health and the environment from any reasonably anticipated adverse effects due to any toxic pollutants that may be present in the sludge or biosolids.

2. In all cases, if the person (permit holder) who prepares the sewage sludge supplies the sewage sludge to another person for land application use or to the owner or lease holder of the land, the permit holder shall provide necessary information to the parties who receive the sludge to assure compliance with these regulations.

3. The land application of processed or unprocessed chemical toilet waste, grease trap waste, grit trap waste, milk solids, or similar non-hazardous municipal or industrial solid wastes, or any of the wastes listed in this provision combined with biosolids, WTP residuals or domestic septage is prohibited unless the grease trap waste is added at a fats, oil and grease (FOG) receiving facility as part of an anaerobic digestion process.

B. Testing Requirements

1. Sewage sludge or biosolids shall be tested once during the term of this permit for the Interim I and Interim II phases and annually for the Final phase in accordance with the method specified in both 40 CFR Part 261, Appendix II and 40 CFR Part 268, Appendix I [Toxicity Characteristic Leaching Procedure (TCLP)] or other method that receives the prior approval of the TCEQ for the contaminants listed in 40 CFR Part 261.24, Table 1. Sewage sludge or biosolids failing this test shall be managed according to RCRA standards for generators of hazardous waste, and the waste's disposition must be in accordance with all applicable requirements for hazardous waste processing, storage, or disposal. Following failure of any TCLP test, the management or disposal of sewage sludge or biosolids at a facility other than an authorized hazardous waste processing, storage, or disposal facility shall be prohibited until such time as the permittee can demonstrate the sewage sludge or biosolids no longer exhibits the hazardous waste toxicity characteristics (as demonstrated by the results of the TCLP tests). A written report shall be provided to both the TCEQ Registration and Reporting Section (MC 129) of the Permitting and Registration Support Division and the Regional Director (MC Region 12) within seven (7) days after failing the TCLP Test.

The report shall contain test results, certification that unauthorized waste management has stopped, and a summary of alternative disposal plans that comply with RCRA standards for the management of hazardous waste. The report shall be addressed to: Director, Permitting and Registration Support Division (MC 129), Texas Commission on Environmental Quality, P.O. Box 13087, Austin, Texas 78711-3087. In addition, the permittee shall prepare an annual report on the results of all sludge toxicity testing. This annual report shall be submitted to the TCEQ Regional Office (MC Region 12) and the Compliance Monitoring Team (MC 224) of the Enforcement Division by September 30th of each year. The permittee must submit this annual report using the online electronic reporting system available through the TCEQ website unless the permittee requests and obtains an electronic reporting waiver.

2. Biosolids shall not be applied to the land if the concentration of the pollutants exceeds the pollutant concentration criteria in Table 1. The frequency of testing for pollutants in Table 1 is found in Section I.C. of this permit.

TABLE 1

Pollutant	Ceiling Concentration (Milligrams per kilogram)*
Arsenic	75
Cadmium	85
Chromium	3000
Copper	4300
Lead	840
Mercury	57
Molybdenum	75
Nickel	420
PCBs	49
Selenium	100
Zinc	7500

* Dry weight basis

3. Pathogen Control

All sewage sludge that is applied to agricultural land, forest, a public contact site, or a reclamation site must be treated by one of the following methods to ensure that the sludge meets either the Class A, Class AB or Class B biosolids pathogen requirements.

a. For sewage sludge to be classified as Class A biosolids with respect to pathogens, the density of fecal coliform in the sewage sludge must be less than 1,000 most probable number (MPN) per gram of total solids (dry weight basis), or the density of Salmonella sp. bacteria in the sewage sludge must be less than three MPN per four grams of total solids (dry weight basis) at the time the sewage sludge is used or disposed. In addition, one of the alternatives listed below must be met:

Alternative 1 - The temperature of the sewage sludge that is used or disposed shall be maintained at or above a specific value for a period of time. See 30 TAC § 312.82(a)(2)(A) for specific information;

Alternative 5 (PFRP) - Sewage sludge that is used or disposed of must be treated in one of the Processes to Further Reduce Pathogens (PFRP) described in 40 CFR Part 503, Appendix B. PFRP include composting, heat drying, heat treatment, and thermophilic aerobic digestion; or

Alternative 6 (PFRP Equivalent) - Sewage sludge that is used or disposed of must be treated in a process that has been approved by the U. S. Environmental Protection Agency as being equivalent to those in Alternative 5.

b. For sewage sludge to be classified as Class AB biosolids with respect to pathogens, the density of fecal coliform in the sewage sludge must be less than 1,000 MPN per gram of total solids (dry weight basis), or the density of *Salmonella* sp. bacteria in the sewage sludge be less than three MPN per four grams of total solids (dry weight basis) at the time the sewage sludge is used or disposed. In addition, one of the alternatives listed below must be met:

   Alternative 2 - The pH of the sewage sludge that is used or disposed shall be raised to above 12 std. units and shall remain above 12 std. units for 72 hours.

   The temperature of the sewage sludge shall be above 52° Celsius for 12 hours or longer during the period that the pH of the sewage sludge is above 12 std. units.

   At the end of the 72-hour period during which the pH of the sewage sludge is above 12 std. units, the sewage sludge shall be air dried to achieve a percent solids in the sewage sludge greater than 50%; or

   Alternative 3 - The sewage sludge shall be analyzed for enteric viruses prior to pathogen treatment. The limit for enteric viruses is less than one Plaque-forming Unit per four grams of total solids (dry weight basis) either before or following pathogen treatment. See 30 TAC § 312.82(a)(2)(C)(i-iii) for specific information. The sewage sludge shall be analyzed for viable helminth ova prior to pathogen treatment. The limit for viable helminth ova is less than one per four grams of total solids (dry weight basis) either before or following pathogen treatment. See 30 TAC § 312.82(a)(2)(C)(iv-vi) for specific information; or

   Alternative 4 - The density of enteric viruses in the sewage sludge shall be less than one Plaque-forming Unit per four grams of total solids (dry weight basis) at the time the sewage sludge is used or disposed. The density of viable helminth ova in the sewage sludge shall be less than one per four grams of total solids (dry weight basis) at the time the sewage sludge is used or disposed.

c. Sewage sludge that meets the requirements of Class AB biosolids may be classified a Class A biosolids if a variance request is submitted in writing that is supported by substantial documentation demonstrating equivalent methods for reducing odors and written approval is granted by the executive director. The executive director may deny the variance request or revoke that approved variance if it is determined that the variance may potentially endanger human health or the environment or create nuisance odor conditions.

d. Three alternatives are available to demonstrate compliance with Class B biosolids criteria.

Alternative 1

i. A minimum of seven random samples of the sewage sludge shall be collected within 48 hours of the time the sewage sludge is used or disposed of during each monitoring episode for the sewage sludge.

ii. The geometric mean of the density of fecal coliform in the samples collected shall be less than either 2,000,000 MPN per gram of total solids (dry weight basis) or 2,000,000 Colony Forming Units per gram of total solids (dry weight basis).

Alternative 2 - Sewage sludge that is used or disposed of shall be treated in one of the Processes to Significantly Reduce Pathogens (PSRP) described in 40 CFR Part 503, Appendix B, so long as all of the following requirements are met by the generator of the sewage sludge.

i. Prior to use or disposal, all the sewage sludge must have been generated from a single location, except as provided in paragraph v. below;

ii. An independent Texas Licensed Professional Engineer must make a certification to the generator of a sewage sludge that the wastewater treatment facility generating the sewage sludge is designed to achieve one of the PSRP at the permitted design loading of the facility. The certification need only be repeated if the design loading of the facility is increased. The certification shall include a statement indicating the design meets all the applicable standards specified in Appendix B of 40 CFR Part 503;

iii. Prior to any off-site transportation or on-site use or disposal of any sewage sludge generated at a wastewater treatment facility, the chief certified operator of the wastewater treatment facility or other responsible official who manages the processes to significantly reduce pathogens at the wastewater treatment facility for the permittee, shall certify that the sewage sludge underwent at least the minimum operational requirements necessary in order to meet one of the PSRP. The acceptable processes and the minimum operational and record keeping requirements shall be in accordance with established U.S. Environmental Protection Agency final guidance;

iv. All certification records and operational records describing how the requirements of this paragraph were met shall be kept by the generator for a minimum of three years and be available for inspection by commission staff for review; and

v. If the sewage sludge is generated from a mixture of sources, resulting from a person who prepares sewage sludge from more than one wastewater treatment facility, the resulting derived product shall meet one of the PSRP, and shall meet the certification, operation, and record keeping requirements of this paragraph.

Alternative 3 - Sewage sludge shall be treated in an equivalent process that has been approved by the U.S. Environmental Protection Agency, so long as all of the following requirements are met by the generator of the sewage sludge.

i. Prior to use or disposal, all the sewage sludge must have been generated from a single location, except as provided in paragraph v. below;

ii. Prior to any off-site transportation or on-site use or disposal of any sewage sludge generated at a wastewater treatment facility, the chief certified operator of the wastewater treatment facility or other responsible official who manages the processes to significantly reduce pathogens at the wastewater treatment facility for the permittee, shall certify that the sewage sludge underwent at least the minimum operational requirements necessary in order to meet one of the PSRP. The acceptable processes and the minimum operational and record keeping requirements shall be in accordance with established U.S. Environmental Protection Agency final guidance;

iii. All certification records and operational records describing how the requirements of this paragraph were met shall be kept by the generator for a minimum of three years and be available for inspection by commission staff for review;

iv. The Executive Director will accept from the U.S. Environmental Protection Agency a finding of equivalency to the defined PSRP; and

v. If the sewage sludge is generated from a mixture of sources resulting from a person who prepares sewage sludge from more than one wastewater treatment facility, the resulting derived product shall meet one of the Processes to Significantly Reduce Pathogens, and shall meet the certification, operation, and record keeping requirements of this paragraph.

In addition to the Alternatives 1 – 3, the following site restrictions must be met if Class B biosolids are land applied:

i. Food crops with harvested parts that touch the biosolids/soil mixture and are totally above the land surface shall not be harvested for 14 months after application of biosolids.

ii. Food crops with harvested parts below the surface of the land shall not be harvested for 20 months after application of biosolids when the biosolids remain on the land surface for 4 months or longer prior to incorporation into the soil.

iii. Food crops with harvested parts below the surface of the land shall not be harvested for 38 months after application of biosolids when the biosolids remain on the land surface for less than 4 months prior to incorporation into the soil.

iv. Food crops, feed crops, and fiber crops shall not be harvested for 30 days after application of biosolids.

v. Domestic livestock shall not be allowed to graze on the land for 30 days after application of biosolids.

vi. Turf grown on land where biosolids are applied shall not be harvested for 1 year after application of the biosolids when the harvested turf is placed on either land with a high potential for public exposure or a lawn.

vii. Public access to land with a high potential for public exposure shall be restricted for 1 year after application of biosolids.

viii. Public access to land with a low potential for public exposure shall be restricted for 30 days after application of biosolids.

ix. Land application of biosolids shall be in accordance with the buffer zone requirements found in 30 TAC § 312.44.

4. Vector Attraction Reduction Requirements

All bulk sewage sludge that is applied to agricultural land, forest, a public contact site, or a reclamation site shall be treated by one of the following Alternatives 1 through 10 for vector attraction reduction.

Alternative 1 - The mass of volatile solids in the sewage sludge shall be reduced by a minimum of 38%.

Alternative 2 - If Alternative 1 cannot be met for an anaerobically digested sludge, demonstration can be made by digesting a portion of the previously digested sludge anaerobically in the laboratory in a bench-scale unit for 40 additional days at a temperature between 30° and 37° Celsius. Volatile solids must be reduced by less than 17% to demonstrate compliance.

Alternative 3 - If Alternative 1 cannot be met for an aerobically digested sludge, demonstration can be made by digesting a portion of the previously digested sludge with percent solids of two percent or less aerobically in the laboratory in a bench-scale unit for 30 additional days at 20° Celsius. Volatile solids must be reduced by less than 15% to demonstrate compliance.

Alternative 4 - The specific oxygen uptake rate (SOUR) for sewage sludge treated in an aerobic process shall be equal to or less than 1.5 milligrams of oxygen per hour per gram of total solids (dry weight basis) at a temperature of 20° Celsius.

Alternative 5 - Sewage sludge shall be treated in an aerobic process for 14 days or longer. During that time, the temperature of the sewage sludge shall be higher than 40° Celsius and the average temperature of the sewage sludge shall be higher than 45° Celsius.

Alternative 6 - The pH of sewage sludge shall be raised to 12 or higher by alkali addition and, without the addition of more alkali shall remain at 12 or higher for two hours and then remain at a pH of 11.5 or higher for an additional 22 hours at the time the sewage sludge is prepared for sale or given away in a bag or other container.

Alternative 7 - The percent solids of sewage sludge that does not contain unstabilized solids generated in a primary wastewater treatment process shall be equal to or greater than 75% based on the moisture content and total solids prior to mixing with other materials. Unstabilized solids are defined as organic materials in sewage sludge that have not been treated in either an aerobic or anaerobic treatment process.

Alternative 8 - The percent solids of sewage sludge that contains unstabilized solids generated in a primary wastewater treatment process shall be equal to or greater than 90% based on the moisture content and total solids prior to mixing with other materials at the time the sludge is used. Unstabilized solids are defined as organic materials in sewage sludge that have not been treated in either an aerobic or anaerobic treatment process.

Alternative 9 -

i. Biosolids shall be injected below the surface of the land.

ii. No significant amount of the biosolids shall be present on the land surface within one hour after the biosolids are injected.

iii. When sewage sludge that is injected below the surface of the land is Class A or Class AB with respect to pathogens, the biosolids shall be injected below the land surface within eight hours after being discharged from the pathogen treatment process.

Alternative 10-

i. Biosolids applied to the land surface or placed on a surface disposal site shall be incorporated into the soil within six hours after application to or placement on the land.

ii. When biosolids that are incorporated into the soil is Class A or Class AB with respect to pathogens, the biosolids shall be applied to or placed on the land within eight hours after being discharged from the pathogen treatment process.

C. Monitoring Requirements

Toxicity Characteristic Leaching Procedure (TCLP) Test	- once during the term of this permit for the Interim I and Interim II phases and annually for the Final phase
PCBs	- once during the term of this permit for the Interim I and Interim II phases and annually for the Final phase

All metal constituents and fecal coliform or *Salmonella* sp. bacteria shall be monitored at the appropriate frequency shown below, pursuant to 30 TAC § 312.46(a)(1):

Amount of biosolids (*) metric tons per 365-day period	Monitoring Frequency
0 to less than 290	Once/Year
290 to less than 1,500	Once/Quarter
1,500 to less than 15,000	Once/Two Months
15,000 or greater	Once/Month

(*) *The amount of bulk biosolids applied to the land (dry wt. basis).*

Representative samples of sewage sludge shall be collected and analyzed in accordance with the methods referenced in 30 TAC § 312.7

Identify each of the analytic methods used by the facility to analyze enteric viruses, fecal coliforms, helminth ova, *Salmonella* sp., and other regulated parameters.

Identify in the following categories (as applicable) the sewage sludge or biosolids treatment process or processes at the facility: preliminary operations (e.g., sludge or biosolids grinding and degritting), thickening (concentration), stabilization, anaerobic digestion, aerobic digestion, composting, conditioning, disinfection (e.g., beta ray irradiation, gamma ray irradiation, pasteurization), dewatering (e.g., centrifugation, sludge drying beds, sludge lagoons), heat drying, thermal reduction, and methane or biogas capture and recovery.

Identify the nature of material generated by the facility (such as a biosolid for beneficial use or land-farming, or sewage sludge or biosolids for disposal at a monofill) and whether the material is ultimately conveyed off-site in bulk or in bags.

SECTION II. REQUIREMENTS SPECIFIC TO BULK SEWAGE SLUDGE OR BIOSOLIDS FOR APPLICATION TO THE LAND MEETING CLASS A, CLASS AB or B PATHOGEN REDUCTION AND THE CUMULATIVE LOADING RATES IN TABLE 2, OR CLASS B PATHOGEN REDUCTION AND THE POLLUTANT CONCENTRATIONS IN TABLE 3

For those permittees meeting Class A, Class AB or B pathogen reduction requirements and that meet the cumulative loading rates in Table 2 below, or the Class B pathogen reduction requirements and contain concentrations of pollutants below listed in Table 3, the following conditions apply:

A. Pollutant Limits

Table 2

Pollutant	Cumulative Pollutant Loading Rate (pounds per acre)*
Arsenic	36
Cadmium	35
Chromium	2677
Copper	1339
Lead	268
Mercury	15
Molybdenum	Report Only
Nickel	375
Selenium	89
Zinc	2500

Table 3

Pollutant	Monthly Average Concentration (milligrams per kilogram)*
Arsenic	41
Cadmium	39
Chromium	1200
Copper	1500
Lead	300
Mercury	17
Molybdenum	Report Only
Nickel	420
Selenium	36
Zinc	2800

*Dry weight basis

B. Pathogen Control

All bulk sewage sludge that is applied to agricultural land, forest, a public contact site, a reclamation site, shall be treated by either Class A, Class AB or Class B biosolids pathogen reduction requirements as defined above in Section I.B.3.

C. Management Practices

1. Bulk biosolids shall not be applied to agricultural land, forest, a public contact site, or a reclamation site that is flooded, frozen, or snow-covered so that the bulk sewage sludge enters a wetland or other waters in the State.

2. Bulk biosolids not meeting Class A requirements shall be land applied in a manner which complies with Applicability in accordance with 30 TAC §312.41 and the Management Requirements in accordance with 30 TAC § 312.44.

3. Bulk biosolids shall be applied at or below the agronomic rate of the cover crop.

4. An information sheet shall be provided to the person who receives bulk Class A or AB biosolids sold or given away. The information sheet shall contain the following information:

   a. The name and address of the person who prepared the Class A or AB biosolids that are sold or given away in a bag or other container for application to the land.

   b. A statement that application of the biosolids to the land is prohibited except in accordance with the instruction on the label or information sheet.

   c. The annual whole sludge application rate for the biosolids application rate for the biosolids that does not cause any of the cumulative pollutant loading rates in Table 2 above to be exceeded, unless the pollutant concentrations in Table 3 found in Section II above are met.

D. Notification Requirements

1. If bulk is applied to land in a State other than Texas, written notice shall be provided prior to the initial land application to the permitting authority for the State in which the bulk biosolids are proposed to be applied. The notice shall include:

   a. The location, by street address, and specific latitude and longitude, of each land application site.

   b. The approximate time period bulk biosolids will be applied to the site.

   c. The name, address, telephone number, and National Pollutant Discharge Elimination System permit number (if appropriate) for the person who will apply the bulk biosolids.

2. The permittee shall give 180 days prior notice to the Executive Director in care of the Wastewater Permitting Section (MC 148) of the Water Quality Division of any change planned in the biosolids disposal practice.

E. Record Keeping Requirements

The documents will be retained at the facility site and/or shall be readily available for review by a TCEQ representative. The person who prepares bulk sewage sludge or a biosolids material shall develop the following information and shall retain the information at the facility site and/or shall be readily available for review by a TCEQ representative for a

period of five years. If the permittee supplies the sludge to another person who land applies the sludge, the permittee shall notify the land applier of the requirements for record keeping found in 30 TAC § 312.47 for persons who land apply.

1. The concentration (mg/kg) in the sludge of each pollutant listed in Table 3 above and the applicable pollutant concentration criteria (mg/kg), or the applicable cumulative pollutant loading rate and the applicable cumulative pollutant loading rate limit (lbs/ac) listed in Table 2 above.

2. A description of how the pathogen reduction requirements are met (including site restrictions for Class AB and Class B biosolids, if applicable).

3. A description of how the vector attraction reduction requirements are met.

4. A description of how the management practices listed above in Section II.C are being met.

5. The following certification statement:

   "I certify, under penalty of law, that the applicable pathogen requirements in 30 TAC § 312.82(a) or (b) and the vector attraction reduction requirements in 30 TAC § 312.83(b) have been met for each site on which bulk biosolids are applied. This determination has been made under my direction and supervision in accordance with the system designed to ensure that qualified personnel properly gather and evaluate the information used to determine that the management practices have been met. I am aware that there are significant penalties for false certification including fine and imprisonment."

6. The recommended agronomic loading rate from the references listed in Section II.C.3. above, as well as the actual agronomic loading rate shall be retained. The person who applies bulk biosolids shall develop the following information and shall retain the information at the facility site and/or shall be readily available for review by a TCEQ representative indefinitely. If the permittee supplies the sludge to another person who land applies the sludge, the permittee shall notify the land applier of the requirements for record keeping found in 30 TAC § 312.47 for persons who land apply:

   a. A certification statement that all applicable requirements (specifically listed) have been met, and that the permittee understands that there are significant penalties for false certification including fine and imprisonment. See 30 TAC § 312.47(a)(4)(A)(ii) or 30 TAC § 312.47(a)(5)(A)(ii), as applicable, and to the permittee's specific sludge treatment activities.

   b. The location, by street address, and specific latitude and longitude, of each site on which biosolids are applied.

   c. The number of acres in each site on which bulk biosolids are applied.

   d. The date and time biosolids are applied to each site.

   e. The cumulative amount of each pollutant in pounds/acre listed in Table 2 applied to each site.

   f. The total amount of biosolids applied to each site in dry tons.

The above records shall be maintained on-site on a monthly basis and shall be made available to the Texas Commission on Environmental Quality upon request.

F. Reporting Requirements

The permittee shall report annually to the TCEQ Regional Office (MC Region 12) and Compliance Monitoring Team (MC 224) of the Enforcement Division, by September 30th of each year the following information. The permittee must submit this annual report using the online electronic reporting system available through the TCEQ website unless the permittee requests and obtains an electronic reporting waiver.

1. Identify in the following categories (as applicable) the sewage sludge or biosolids treatment process or processes at the facility: preliminary operations (e.g., sludge or biosolids grinding and degritting), thickening (concentration), stabilization, anaerobic digestion, aerobic digestion, composting, conditioning, disinfection (e.g., beta ray irradiation, gamma ray irradiation, pasteurization), dewatering (e.g., centrifugation, sludge drying beds, sludge lagoons), heat drying, thermal reduction, and methane or biogas capture and recovery.

2. Identify the nature of material generated by the facility (such as a biosolid for beneficial use or land-farming, or sewage sludge for disposal at a monofill) and whether the material is ultimately conveyed off-site in bulk or in bags.

3. Results of tests performed for pollutants found in either Table 2 or 3 as appropriate for the permittee's land application practices.

4. The frequency of monitoring listed in Section I.C. that applies to the permittee.

5. Toxicity Characteristic Leaching Procedure (TCLP) results.

6. PCB concentration in sludge or biosolids in mg/kg.

7. Identity of hauler(s) and TCEQ transporter number.

8. Date(s) of transport.

9. Texas Commission on Environmental Quality registration number, if applicable.

10. Amount of sludge or biosolids disposal dry weight (lbs/acre) at each disposal site.

11. The concentration (mg/kg) in the sludge of each pollutant listed in Table 1 (defined as a monthly average) as well as the applicable pollutant concentration criteria (mg/kg) listed in Table 3 above, or the applicable pollutant loading rate limit (lbs/acre) listed in Table 2 above if it exceeds 90% of the limit.

12. Level of pathogen reduction achieved (Class A, Class AB or Class B).

13. Alternative used as listed in Section I.B.3.(a. or b.). Alternatives describe how the pathogen reduction requirements are met. If Class B biosolids, include information on how site restrictions were met.

14. Identify each of the analytic methods used by the facility to analyze enteric viruses, fecal coliforms, helminth ova, *Salmonella* sp., and other regulated parameters.

15. Vector attraction reduction alternative used as listed in Section I.B.4.

16. Amount of sludge or biosolids transported in dry tons/year.

17. The certification statement listed in either 30 TAC § 312.47(a)(4)(A)(ii) or 30 TAC § 312.47(a)(5)(A)(ii) as applicable to the permittee's sludge or biosolids treatment activities, shall be attached to the annual reporting form.

18. When the amount of any pollutant applied to the land exceeds 90% of the cumulative pollutant loading rate for that pollutant, as described in Table 2, the permittee shall report the following information as an attachment to the annual reporting form.

    a. The location, by street address, and specific latitude and longitude.

    b. The number of acres in each site on which bulk biosolids are applied.

    c. The date and time bulk biosolids are applied to each site.

    d. The cumulative amount of each pollutant (i.e., pounds/acre) listed in Table 2 in the bulk biosolids applied to each site.

    e. The amount of biosolids (i.e., dry tons) applied to each site.

    The above records shall be maintained on a monthly basis and shall be made available to the Texas Commission on Environmental Quality upon request.

SECTION III. REQUIREMENTS APPLYING TO ALL SEWAGE SLUDGE OR BIOSOLIDS DISPOSED IN A MUNICIPAL SOLID WASTE LANDFILL

A. The permittee shall handle and dispose of sewage sludge or biosolids in accordance with 30 TAC § 330 and all other applicable state and federal regulations to protect public health and the environment from any reasonably anticipated adverse effects due to any toxic pollutants that may be present. The permittee shall ensure that the sewage sludge meets the requirements in 30 TAC § 330 concerning the quality of the sludge or biosolids disposed in a municipal solid waste landfill.

B. If the permittee generates sewage sludge and supplies that sewage sludge or biosolids to the owner or operator of a municipal solid waste landfill (MSWLF) for disposal, the permittee shall provide to the owner or operator of the MSWLF appropriate information needed to be in compliance with the provisions of this permit.

C. The permittee shall give 180 days prior notice to the Executive Director in care of the Wastewater Permitting Section (MC 148) of the Water Quality Division of any change planned in the sewage sludge or biosolids disposal practice.

D. Sewage sludge or biosolids shall be tested once during the term of this permit for the Interim I and Interim II phases and annually for the Final phase in accordance with the method specified in both 40 CFR Part 261, Appendix II and 40 CFR Part 268, Appendix I (Toxicity Characteristic Leaching Procedure) or other method, which receives the prior approval of the TCEQ for contaminants listed in Table 1 of 40 CFR § 261.24. Sewage sludge or biosolids failing this test shall be managed according to RCRA standards for generators of hazardous waste, and the waste's disposition must be in accordance with all applicable requirements for hazardous waste processing, storage, or disposal.

   Following failure of any TCLP test, the management or disposal of sewage sludge or biosolids at a facility other than an authorized hazardous waste processing, storage, or disposal facility shall be prohibited until such time as the permittee can demonstrate the sewage sludge or biosolids no longer exhibits the hazardous waste toxicity characteristics (as demonstrated by the results of the TCLP tests). A written report shall be provided to both the TCEQ Registration and Reporting Section (MC 129) of the Permitting and Registration Support Division and the Regional Director (MC Region 12) of the appropriate TCEQ field office within 7 days after failing the TCLP Test.

   The report shall contain test results, certification that unauthorized waste management has stopped, and a summary of alternative disposal plans that comply with RCRA standards for the management of hazardous waste. The report shall be addressed to: Director, Permitting and Registration Support Division (MC 129), Texas Commission on Environmental Quality, P. O. Box 13087, Austin, Texas 78711-3087. In addition, the permittee shall prepare an annual report on the results of all sludge toxicity testing. This annual report shall be submitted to the TCEQ Regional Office (MC Region 12) and the Compliance Monitoring Team (MC 224) of the Enforcement Division by September 30 of each year.

E. Sewage sludge or biosolids shall be tested as needed, in accordance with the requirements of 30 TAC Chapter 330.

F. Record Keeping Requirements

   The permittee shall develop the following information and shall retain the information for five years.

1. The description (including procedures followed and the results) of all liquid Paint Filter Tests performed.

2. The description (including procedures followed and results) of all TCLP tests performed.

The above records shall be maintained on-site on a monthly basis and shall be made available to the Texas Commission on Environmental Quality upon request.

G. Reporting Requirements

The permittee shall report annually to the TCEQ Regional Office (MC Region 12) and Compliance Monitoring Team (MC 224) of the Enforcement Division by September 30th of each year the following information. The permittee must submit this annual report using the online electronic reporting system available through the TCEQ website unless the permittee requests and obtains an electronic reporting waiver.

1. Identify in the following categories (as applicable) the sewage sludge or biosolids treatment process or processes at the facility: preliminary operations (e.g., sludge or biosolids grinding and degritting), thickening (concentration), stabilization, anaerobic digestion, aerobic digestion, composting, conditioning, disinfection (e.g., beta ray irradiation, gamma ray irradiation, pasteurization), dewatering (e.g., centrifugation, sludge drying beds, sludge lagoons), heat drying, thermal reduction, and methane or biogas capture and recovery.

2. Toxicity Characteristic Leaching Procedure (TCLP) results.

3. Annual sludge or biosolids production in dry tons/year.

4. Amount of sludge or biosolids disposed in a municipal solid waste landfill in dry tons/year.

5. Amount of sludge or biosolids transported interstate in dry tons/year.

6. A certification that the sewage sludge or biosolids meets the requirements of 30 TAC § 330 concerning the quality of the sludge disposed in a municipal solid waste landfill.

7. Identity of hauler(s) and transporter registration number.

8. Owner of disposal site(s).

9. Location of disposal site(s).

10. Date(s) of disposal.

The above records shall be maintained on-site on a monthly basis and shall be made available to the Texas Commission on Environmental Quality upon request.

SECTION IV. REQUIREMENTS APPLYING TO SLUDGE OR BIOSOLIDS TRANSPORTED TO ANOTHER FACILITY FOR FURTHER PROCESSING

These provisions apply to sludge or biosolids that is transported to another wastewater treatment facility or facility that further processes sludge or biosolids. These provisions are intended to allow transport of sludge or biosolids to facilities that have been authorized to accept sludge or biosolids. These provisions do not limit the ability of the receiving facility to determine whether to accept the sludge or biosolids, nor do they limit the ability of the receiving facility to request additional testing or documentation.

A. General Requirements

1. The permittee shall handle and dispose of sewage sludge or biosolids in accordance with 30 TAC Chapter 312 and all other applicable state and federal regulations in a manner that protects public health and the environment from any reasonably anticipated adverse effects due to any toxic pollutants that may be present in the sludge.

2. Sludge or biosolids may only be transported using a registered transporter or using an approved pipeline.

B. Record Keeping Requirements

1. For sludge transported by an approved pipeline, the permittee must maintain records of the following:

   a. the amount of sludge or biosolids transported;

   b. the date of transport;

   c. the name and TCEQ permit number of the receiving facility or facilities;

   d. the location of the receiving facility or facilities;

   e. the name and TCEQ permit number of the facility that generated the waste; and

   f. copy of the written agreement between the permittee and the receiving facility to accept sludge or biosolids.

2. For sludge or biosolids transported by a registered transporter, the permittee must maintain records of the completed trip tickets in accordance with 30 TAC § 312.145(a)(1)-(7) and amount of sludge or biosolids transported.

3. The above records shall be maintained on-site on a monthly basis and shall be made available to the TCEQ upon request. These records shall be retained for at least five years.

C. Reporting Requirements

The permittee shall report the following information annually to the TCEQ Regional Office (MC Region 12) and Compliance Monitoring Team (MC 224) of the Enforcement Division, by September 30th of each year. The permittee must submit this annual report using the online electronic reporting system available through the TCEQ website unless the permittee requests and obtains an electronic reporting waiver.

1. Identify in the following categories (as applicable) the sewage sludge or biosolids treatment process or processes at the facility: preliminary operations (e.g., sludge or biosolids grinding and degritting), thickening (concentration), stabilization, anaerobic digestion, aerobic digestion, composting, conditioning, disinfection (e.g., beta ray irradiation, gamma ray irradiation, pasteurization), dewatering (e.g., centrifugation, sludge drying beds, sludge lagoons), heat drying, thermal reduction, and methane or biogas capture and recovery.

2. the annual sludge or biosolids production;

3. the amount of sludge or biosolids transported;

4. the owner of each receiving facility;

5. the location of each receiving facility; and

6. the date(s) of disposal at each receiving facility.

OTHER REQUIREMENTS

1. The permittee shall employ or contract with one or more licensed wastewater treatment facility operators or wastewater system operations companies holding a valid license or registration according to the requirements of 30 TAC Chapter 30, Occupational Licenses and Registrations, and in particular 30 TAC Chapter 30, Subchapter J, Wastewater Operators and Operations Companies.

   This Category C (Interim I and Interim II phases) and B (Final phase) facility must be operated by a chief operator or an operator holding a Class C (Interim I and Interim II phases) and B (Final phase) license or higher. The facility must be operated a minimum of five days per week by the licensed chief operator or an operator holding the required level of license or higher. The licensed chief operator or operator holding the required level of license or higher must be available by telephone or pager seven days per week. Where shift operation of the wastewater treatment facility is necessary, each shift that does not have the on-site supervision of the licensed chief operator must be supervised by an operator in charge who is licensed not less than one level below the category for the facility.

2. The facility is not located in the Coastal Management Program boundary.

3. There is no mixing zone established for this discharge to an intermittent stream. Acute toxic criteria apply at the point of discharge.

4. The permittee has submitted sufficient evidence of legal restrictions prohibiting residential structures within the part of the buffer zone not owned by the permittee according to 30 TAC § 309.13(e)(3) for the Interim I and Interim II phase facilities. The permittee shall comply with the requirements of 30 TAC § 309.13 (a) through (d). (See Attachment A1.)

   Prior to construction of the Final phase facility the permittee shall submit sufficient evidence of legal restrictions prohibiting residential structures within the part of the buffer zone not owned by the permittee according to 30 TAC § 309.13(e)(3). The evidence of legal restrictions shall be submitted to the Executive Director in care of the TCEQ Wastewater Permitting Section (MC 148). The permittee shall comply with the requirements of 30 TAC § 309.13(a) through (d). (See Attachment A2.)

5. The permittee shall provide facilities for the protection of its wastewater treatment facility from a 100-year flood.

6. In accordance with 30 TAC § 319.9, a permittee that has at least twelve months of uninterrupted compliance with its bacteria limit may notify the commission in writing of its compliance and request a less frequent measurement schedule. To request a less frequent schedule, the permittee shall submit a written request to the TCEQ Wastewater Permitting Section (MC 148) for each phase that includes a different monitoring frequency. The request must contain all of the reported bacteria values (Daily Avg. and Daily Max/Single Grab) for the twelve consecutive months immediately prior to the request. If the Executive Director finds that a less frequent measurement schedule is protective of human health and the environment, the permittee may be given a less frequent measurement schedule. For this permit, 1/month may be reduced to 1/quarter in the Interim I phase, 2/month may be reduced to 1/month in the Interim II phase, and 1/week may be reduced to 2/month in the Final phase. **A violation of any bacteria limit by a facility that has been granted a less frequent measurement schedule will require the permittee to return to the**

standard frequency schedule and submit written notice to the TCEQ Wastewater Permitting Section (MC 148). The permittee may not apply for another reduction in measurement frequency for at least 24 months from the date of the last violation. The Executive Director may establish a more frequent measurement schedule if necessary to protect human health or the environment.

7. Prior to construction of the Final phase treatment facility the permittee shall submit to the TCEQ Wastewater Permitting Section (MC 148) a summary transmittal letter in accordance with the requirements in 30 TAC § 217.6(d). If requested by the Wastewater Permitting Section, the permittee shall submit plans, specifications, and a final engineering design report which comply with 30 TAC Chapter 217, Design Criteria for Domestic Wastewater Systems. The permittee shall clearly show how the treatment system will meet the effluent limitations required on Page 2b of this permit. A copy of the summary transmittal letter shall be available at the plant site for inspection by authorized representatives of the TCEQ.

   Plans and specifications have been approved for the 0.70 MGD wastewater treatment facility, in accordance with 30 TAC § 217, Design Criteria for Domestic Wastewater Systems. A summary transmittal approval letter was issued July 27, 2015 (Log No. 0715/070).

8. The permittee shall notify the TCEQ Regional Office (MC Region 12) and the Applications Review and Processing Team (MC 148) of the Water Quality Division, in writing at least forty-five days prior to the completion of the new facility on Notification of Completion Form 20007.

CONTRIBUTING INDUSTRIES AND PRETREATMENT REQUIREMENTS

1. The following pollutants may not be introduced into the treatment facility:

    a. Pollutants which create a fire or explosion hazard in the publicly owned treatment works (POTW), including, but not limited to, waste streams with a closed-cup flash point of less than 140° Fahrenheit (60° Celsius) using the test methods specified in 40 CFR § 261.21;

    b. Pollutants which will cause corrosive structural damage to the POTW, but in no case shall there be discharges with a pH lower than 5.0 standard units, unless the works are specifically designed to accommodate such discharges;

    c. Solid or viscous pollutants in amounts which will cause obstruction to the flow in the POTW, resulting in Interference;

    d. Any pollutant, including oxygen-demanding pollutants (e.g., biochemical oxygen demand), released in a discharge at a flow rate and/or pollutant concentration which will cause Interference with the POTW;

    e. Heat in amounts which will inhibit biological activity in the POTW, resulting in Interference, but in no case shall there be heat in such quantities that the temperature at the POTW treatment plant exceeds 104° Fahrenheit (40° Celsius) unless the Executive Director, upon request of the POTW, approves alternate temperature limits;

    f. Petroleum oil, nonbiodegradable cutting oil, or products of mineral oil origin in amounts that will cause Interference or Pass Through;

    g. Pollutants which result in the presence of toxic gases, vapors, or fumes within the POTW in a quantity that may cause acute worker health and safety problems; and

    h. Any trucked or hauled pollutants except at discharge points designated by the POTW.

2. The permittee shall require any indirect discharger to the treatment works to comply with the reporting requirements of Sections 204(b), 307, and 308 of the Clean Water Act, including any requirements established under 40 CFR Part 403 [*rev. Federal Register/ Vol. 70/ No. 198/ Friday, October 14, 2005/ Rules and Regulations, pages 60134-60798*].

3. The permittee shall provide adequate notification to the Executive Director, care of the Wastewater Permitting Section (MC 148) of the Water Quality Division, within 30 days subsequent to the permittee's knowledge of either of the following:

    a. Any new introduction of pollutants into the treatment works from an indirect discharger which would be subject to Sections 301 and 306 of the Clean Water Act if it were directly discharging those pollutants; and

    b. Any substantial change in the volume or character of pollutants being introduced into the treatment works by a source introducing pollutants into the treatment works at the time of issuance of the permit.

    Any notice shall include information on the quality and quantity of effluent to be introduced into the treatment works and any anticipated impact of the change on the quality or quantity of effluent to be discharged from the POTW.

Revised July 2007

BIOMONITORING REQUIREMENTS

CHRONIC BIOMONITORING REQUIREMENTS: FRESHWATER

The provisions of this section apply to Outfall 001 for whole effluent toxicity (WET) testing.

1. Scope, Frequency, and Methodology

a. The permittee shall test the effluent for toxicity in accordance with the provisions below. Such testing will determine if an appropriately dilute effluent sample adversely affects the survival, reproduction, or growth of the test organisms.

b. Within 90 days of initial discharge of the final phase 1.1 MGD facility, the permittee shall conduct the following toxicity tests using the test organisms, procedures, and quality assurance requirements specified in this part of this permit and in accordance with "Short-Term Methods for Estimating the Chronic Toxicity of Effluents and Receiving Waters to Freshwater Organisms," fourth edition (EPA-821-R-02-013) or its most recent update:

1) Chronic static renewal survival and reproduction test using the water flea (*Ceriodaphnia dubia*) (Method 1002.0). This test should be terminated when 60% of the surviving adults in the control produce three broods or at the end of eight days, whichever occurs first. This test shall be conducted once per quarter.

2) Chronic static renewal 7-day larval survival and growth test using the fathead minnow (*Pimephales promelas*) (Method 1000.0). A minimum of five replicates with eight organisms per replicate shall be used in the control and in each dilution. This test shall be conducted once per quarter.

The permittee must perform and report a valid test for each test species during the prescribed reporting period. An invalid test must be repeated during the same reporting period. An invalid test is defined as any test failing to satisfy the test acceptability criteria, procedures, and quality assurance requirements specified in the test methods and permit.

c. The permittee shall use five effluent dilution concentrations and a control in each toxicity test. These effluent dilution concentrations are 23%, 31%, 41%, 55% and 73% effluent. The critical dilution, defined as 73% effluent, is the effluent concentration representative of the proportion of effluent in the receiving water during critical low flow or critical mixing conditions.

d. This permit may be amended to require a WET limit, a chemical-specific effluent limit, a best management practice, or other appropriate actions to address toxicity. The permittee may be required to conduct a toxicity reduction evaluation (TRE) after multiple toxic events.

e. Testing Frequency Reduction

1) If none of the first four consecutive quarterly tests demonstrates significant toxicity, the permittee may submit this information in writing and, upon approval, reduce the testing frequency to once per six months for the invertebrate test species and once per year for the vertebrate test species.

2) If one or more of the first four consecutive quarterly tests demonstrates significant toxicity, the permittee shall continue quarterly testing for that species until this permit is reissued. If a testing frequency reduction had been previously granted and a subsequent test demonstrates significant toxicity, the permittee shall resume a quarterly testing frequency for that species until this permit is reissued.

2. Required Toxicity Testing Conditions

a. Test Acceptance - The permittee shall repeat any toxicity test, including the control and all effluent dilutions, which fail to meet the following criteria:

1) a control mean survival of 80% or greater;

2) a control mean number of water flea neonates per surviving adult of 15 or greater;

3) a control mean dry weight of surviving fathead minnow larvae of 0.25 mg or greater;

4) a control coefficient of variation percent (CV%) of 40 or less in between replicates for the young of surviving females in the water flea test; and the growth and survival endpoints in the fathead minnow test;

5) a critical dilution CV% of 40 or less for the young of surviving females in the water flea test; and the growth and survival endpoints for the fathead minnow test. However, if statistically significant lethal or nonlethal effects are exhibited at the critical dilution, a CV% greater than 40 shall not invalidate the test;

6) a percent minimum significant difference of 47 or less for water flea reproduction; and

7) a percent minimum significant difference of 30 or less for fathead minnow growth.

b. Statistical Interpretation

1) For the water flea survival test, the statistical analyses used to determine if there is a significant difference between the control and an effluent dilution shall be the Fisher's exact test as described in the manual referenced in in Part 1.b.

2) For the water flea reproduction test and the fathead minnow larval survival and growth tests, the statistical analyses used to determine if there is a significant difference between the control and an effluent dilution shall be in accordance with the manual referenced in Part 1.b.

3) The permittee is responsible for reviewing test concentration-response relationships to ensure that calculated test-results are interpreted and reported correctly. The document entitled "Method Guidance and Recommendation for Whole Effluent Toxicity (WET) Testing (40 CFR Part 136)" (EPA 821-B-00-004) provides guidance on determining the validity of test results.

4) If significant lethality is demonstrated (that is, there is a statistically significant difference in survival at the critical dilution when compared to the survival in the control), the conditions of test acceptability are met, and the survival of the test

organisms are equal to or greater than 80% in the critical dilution and all dilutions below that, then the permittee shall report a survival No Observed Effect Concentration (NOEC) of not less than the critical dilution for the reporting requirements.

5) The NOEC is defined as the greatest effluent dilution at which no significant effect is demonstrated. The Lowest Observed Effect Concentration (LOEC) is defined as the lowest effluent dilution at which a significant effect is demonstrated. A significant effect is defined as a statistically significant difference between the survival, reproduction, or growth of the test organism in a specified effluent dilution when compared to the survival, reproduction, or growth of the test organism in the control.

6) The use of NOECs and LOECs assumes either a monotonic (continuous) concentration-response relationship or a threshold model of the concentration-response relationship. For any test result that demonstrates a non-monotonic (non-continuous) response, the NOEC should be determined based on the guidance manual referenced in Item 3.

7) Pursuant to the responsibility assigned to the permittee in Part 2.b.3), test results that demonstrate a non-monotonic (non-continuous) concentration-response relationship may be submitted, prior to the due date, for technical review. The guidance manual referenced in Item 3 will be used when making a determination of test acceptability.

8) TCEQ staff will review test results for consistency with rules, procedures, and permit requirements.

c. Dilution Water

1) Dilution water used in the toxicity tests must be the receiving water collected at a point upstream of the discharge point as close as possible to the discharge point but unaffected by the discharge. Where the toxicity tests are conducted on effluent discharges to receiving waters that are classified as intermittent streams, or where the toxicity tests are conducted on effluent discharges where no receiving water is available due to zero flow conditions, the permittee shall:

a) substitute a synthetic dilution water that has a pH, hardness, and alkalinity similar to that of the closest downstream perennial water unaffected by the discharge; or

b) use the closest downstream perennial water unaffected by the discharge.

2) Where the receiving water proves unsatisfactory as a result of pre-existing instream toxicity (i.e. fails to fulfill the test acceptance criteria of Part 2.a.), the permittee may substitute synthetic dilution water for the receiving water in all subsequent tests provided the unacceptable receiving water test met the following stipulations:

a) a synthetic lab water control was performed (in addition to the receiving water control) which fulfilled the test acceptance requirements of Part 2.a;

b) the test indicating receiving water toxicity was carried out to completion (i.e., 7 days); and

c) the permittee submitted all test results indicating receiving water toxicity with the reports and information required in Part 3.

3) The synthetic dilution water shall consist of standard, moderately hard, reconstituted water. Upon approval, the permittee may substitute other appropriate dilution water with chemical and physical characteristics similar to that of the receiving water.

d. Samples and Composites

1) The permittee shall collect a minimum of three composite samples from Outfall 001. The second and third composite samples will be used for the renewal of the dilution concentrations for each toxicity test.

2) The permittee shall collect the composite samples such that the samples are representative of any periodic episode of chlorination, biocide usage, or other potentially toxic substance being discharged on an intermittent basis.

3) The permittee shall initiate the toxicity tests within 36 hours after collection of the last portion of the first composite sample. The holding time for any subsequent composite sample shall not exceed 72 hours. Samples shall be maintained at a temperature of 0-6 degrees Centigrade during collection, shipping, and storage.

4) If Outfall 001 ceases discharging during the collection of effluent samples, the requirements for the minimum number of effluent samples, the minimum number of effluent portions, and the sample holding time are waived during that sampling period. However, the permittee must have collected an effluent composite sample volume sufficient to complete the required toxicity tests with renewal of the effluent. When possible, the effluent samples used for the toxicity tests shall be collected on separate days if the discharge occurs over multiple days. The sample collection duration and the static renewal protocol associated with the abbreviated sample collection must be documented in the full report.

5) The effluent samples shall not be dechlorinated after sample collection.

3. Reporting

All reports, tables, plans, summaries, and related correspondence required in this section shall be submitted to the attention of the Standards Implementation Team (MC 150) of the Water Quality Division.

a. The permittee shall prepare a full report of the results of all tests conducted in accordance with the manual referenced in Part 1.b. for every valid and invalid toxicity test initiated whether carried to completion or not.

b. The permittee shall routinely report the results of each biomonitoring test on the Table 1 forms provided with this permit.

1) Annual biomonitoring test results are due on or before January 20th for biomonitoring conducted during the previous 12-month period.

2) Semiannual biomonitoring test results are due on or before July 20th and January 20th for biomonitoring conducted during the previous 6-month period.

3) Quarterly biomonitoring test results are due on or before April 20th, July 20th, October 20th, and January 20th for biomonitoring conducted during the previous calendar quarter.

4) Monthly biomonitoring test results are due on or before the 20th day of the month following sampling.

c. Enter the following codes for the appropriate parameters for valid tests only:

1) For the water flea, Parameter TLP3B, enter a "1" if the NOEC for survival is less than the critical dilution; otherwise, enter a "0."

2) For the water flea, Parameter TOP3B, report the NOEC for survival.

3) For the water flea, Parameter TXP3B, report the LOEC for survival.

4) For the water flea, Parameter TWP3B, enter a "1" if the NOEC for reproduction is less than the critical dilution; otherwise, enter a "0."

5) For the water flea, Parameter TPP3B, report the NOEC for reproduction.

6) For the water flea, Parameter TYP3B, report the LOEC for reproduction.

7) For the fathead minnow, Parameter TLP6C, enter a "1" if the NOEC for survival is less than the critical dilution; otherwise, enter a "0."

8) For the fathead minnow, Parameter TOP6C, report the NOEC for survival.

9) For the fathead minnow, Parameter TXP6C, report the LOEC for survival.

10) For the fathead minnow, Parameter TWP6C, enter a "1" if the NOEC for growth is less than the critical dilution; otherwise, enter a "0."

11) For the fathead minnow, Parameter TPP6C, report the NOEC for growth.

12) For the fathead minnow, Parameter TYP6C, report the LOEC for growth.

d. Enter the following codes for retests only:

1) For retest number 1, Parameter 22415, enter a "1" if the NOEC for survival is less than the critical dilution; otherwise, enter a "0."

2) For retest number 2, Parameter 22416, enter a "1" if the NOEC for survival is less than the critical dilution; otherwise, enter a "0."

4. <u>Persistent Toxicity</u>

The requirements of this Part apply only when a test demonstrates a significant effect at the critical dilution. Significant lethality and significant effect were defined in Part 2.b. Significant sublethality is defined as a statistically significant difference in growth/reproduction at the critical dilution when compared to the growth/reproduction in the control.

a. The permittee shall conduct a total of 2 additional tests (retests) for any species that demonstrates a significant effect (lethal or sublethal) at the critical dilution. The two

retests shall be conducted monthly during the next two consecutive months. The permittee shall not substitute either of the two retests in lieu of routine toxicity testing. All reports shall be submitted within 20 days of test completion. Test completion is defined as the last day of the test.

b. If the retests are performed due to a demonstration of significant lethality, and one or both of the two retests specified in Part 4.a. demonstrates significant lethality, the permittee shall initiate the TRE requirements as specified in Part 5. The provisions of Part 4.a. are suspended upon completion of the two retests and submittal of the TRE action plan and schedule defined in Part 5.

If neither test demonstrates significant lethality and the permittee is testing under the reduced testing frequency provision of Part 1.e., the permittee shall return to a quarterly testing frequency for that species.

c. If the two retests are performed due to a demonstration of significant sublethality, and one or both of the two retests specified in Part 4.a. demonstrates significant lethality, the permittee shall again perform two retests as stipulated in Part 4.a.

d. If the two retests are performed due to a demonstration of significant sublethality, and neither test demonstrates significant lethality, the permittee shall continue testing at the quarterly frequency.

e. Regardless of whether retesting for lethal or sublethal effects, or a combination of the two, no more than one retest per month is required for a species.

5. Toxicity Reduction Evaluation

a. Within 45 days of the retest that demonstrates significant lethality, or within 45 days of being so instructed due to multiple toxic events, the permittee shall submit a general outline for initiating a TRE. The outline shall include, but not be limited to, a description of project personnel, a schedule for obtaining consultants (if needed), a discussion of influent and effluent data available for review, a sampling and analytical schedule, and a proposed TRE initiation date.

b. Within 90 days of the retest that demonstrates significant lethality, or within 90 days of being so instructed due to multiple toxic events, the permittee shall submit a TRE action plan and schedule for conducting a TRE. The plan shall specify the approach and methodology to be used in performing the TRE. A TRE is a step-wise investigation combining toxicity testing with physical and chemical analyses to determine actions necessary to eliminate or reduce effluent toxicity to a level not effecting significant lethality at the critical dilution. The TRE action plan shall describe an approach for the reduction or elimination of lethality for both test species defined in Part 1.b. At a minimum, the TRE action plan shall include the following:

1) Specific Activities - The TRE action plan shall specify the approach the permittee intends to utilize in conducting the TRE, including toxicity characterizations, identifications, confirmations, source evaluations, treatability studies, and alternative approaches. When conducting characterization analyses, the permittee shall perform multiple characterizations and follow the procedures specified in the document entitled “Toxicity Identification Evaluation: Characterization of Chronically Toxic Effluents, Phase I” (EPA/600/6-91/005F) or alternate procedures. The permittee shall perform multiple identifications and follow the methods specified in the documents entitled “Methods for Aquatic

Toxicity Identification Evaluations, Phase II Toxicity Identification Procedures for Samples Exhibiting Acute and Chronic Toxicity" (EPA/600/R-92/080) and "Methods for Aquatic Toxicity Identification Evaluations: Phase III Toxicity Confirmation Procedures for Samples Exhibiting Acute and Chronic Toxicity" (EPA/600/R-92/081). All characterization, identification, and confirmation tests shall be conducted in an orderly and logical progression;

2) Sampling Plan - The TRE action plan should describe sampling locations, methods, holding times, chain of custody, and preservation techniques. The effluent sample volume collected for all tests shall be adequate to perform the toxicity characterization/identification/confirmation procedures and chemical-specific analyses when the toxicity tests show significant lethality. Where the permittee has identified or suspects a specific pollutant and source of effluent toxicity, the permittee shall conduct, concurrent with toxicity testing, chemical-specific analyses for the identified and suspected pollutant and source of effluent toxicity;

3) Quality Assurance Plan - The TRE action plan should address record keeping and data evaluation, calibration and standardization, baseline tests, system blanks, controls, duplicates, spikes, toxicity persistence in the samples, randomization, reference toxicant control charts, and mechanisms to detect artifactual toxicity; and

4) Project Organization - The TRE action plan should describe the project staff, project manager, consulting engineering services (where applicable), consulting analytical and toxicological services, etc.

c. Within 30 days of submittal of the TRE action plan and schedule, the permittee shall implement the TRE.

d. The permittee shall submit quarterly TRE activities reports concerning the progress of the TRE. The quarterly reports are due on or before April 20th, July 20th, October 20th, and January 20th. The report shall detail information regarding the TRE activities including:

1) results and interpretation of any chemical-specific analyses for the identified and suspected pollutant performed during the quarter;

2) results and interpretation of any characterization, identification, and confirmation tests performed during the quarter;

3) any data and substantiating documentation which identifies the pollutant(s) and source of effluent toxicity;

4) results of any studies/evaluations concerning the treatability of the facility's effluent toxicity;

5) any data that identifies effluent toxicity control mechanisms that will reduce effluent toxicity to the level necessary to meet no significant lethality at the critical dilution; and

6) any changes to the initial TRE plan and schedule that are believed necessary as a result of the TRE findings.

e. During the TRE, the permittee shall perform, at a minimum, quarterly testing using the more sensitive species. Testing for the less sensitive species shall continue at the frequency specified in Part 1.b.

f. If the effluent ceases to effect significant lethality, i.e., there is a cessation of lethality, the permittee may end the TRE. A cessation of lethality is defined as no significant lethality for a period of 12 consecutive months with at least monthly testing. At the end of the 12 months, the permittee shall submit a statement of intent to cease the TRE and may then resume the testing frequency specified in Part 1.b.

This provision accommodates situations where operational errors and upsets, spills, or sampling errors triggered the TRE, in contrast to a situation where a single toxicant or group of toxicants cause lethality. This provision does not apply as a result of corrective actions taken by the permittee. Corrective actions are defined as proactive efforts that eliminate or reduce effluent toxicity. These include, but are not limited to, source reduction or elimination, improved housekeeping, changes in chemical usage, and modifications of influent streams and effluent treatment.

The permittee may only apply this cessation of lethality provision once. If the effluent again demonstrates significant lethality to the same species, the permit will be amended to add a WET limit with a compliance period, if appropriate. However, prior to the effective date of the WET limit, the permittee may apply for a permit amendment removing and replacing the WET limit with an alternate toxicity control measure by identifying and confirming the toxicant and an appropriate control measure.

g. The permittee shall complete the TRE and submit a final report on the TRE activities no later than 28 months from the last test day of the retest that confirmed significant lethal effects at the critical dilution. The permittee may petition the Executive Director (in writing) for an extension of the 28-month limit. However, to warrant an extension the permittee must have demonstrated due diligence in its pursuit of the toxicity identification evaluation/TRE and must prove that circumstances beyond its control stalled the toxicity identification evaluation/TRE. The report shall provide information pertaining to the specific control mechanism selected that will, when implemented, result in the reduction of effluent toxicity to no significant lethality at the critical dilution. The report shall also provide a specific corrective action schedule for implementing the selected control mechanism.

h. Based on the results of the TRE and proposed corrective actions, this permit may be amended to modify the biomonitoring requirements, where necessary, require a compliance schedule for implementation of corrective actions, specify a WET limit, specify a best management practice, and specify a chemical-specific limit.

i. Copies of any and all required TRE plans and reports shall also be submitted to the U.S. EPA Region 6 office, 6WQ-PO.

TABLE 1 (SHEET 1 OF 4)

BIOMONITORING REPORTING

CERIODAPHNIA DUBIA SURVIVAL AND REPRODUCTION

		Date Time	Date Time
Dates and Times Composites Collected	No. 1	FROM: _____	TO: _____
	No. 2	FROM: _____	TO: _____
	No. 3	FROM: _____	TO: _____

Test initiated: _____am/pm _____date

Dilution water used: _____ Receiving water _____ Synthetic Dilution water

NUMBER OF YOUNG PRODUCED PER ADULT AT END OF TEST

REP	Percent effluent					
	0%	23%	31%	41%	55%	73%
A						
B						
C						
D						
E						
F						
G						
H						
I						
J						
Survival Mean						
Total Mean						
CV%*						
PMSD						

*Coefficient of Variation = standard deviation x 100/mean (calculation based on young of the surviving adults)
Designate males (M), and dead females (D), along with number of neonates (x) released prior to death.

TABLE 1 (SHEET 2 OF 4)

CERIODAPHNIA DUBIA SURVIVAL AND REPRODUCTION TEST

1. Dunnett's Procedure or Steel's Many-One Rank Test or Wilcoxon Rank Sum Test (with Bonferroni adjustment) or t-test (with Bonferroni adjustment) as appropriate:

   Is the mean number of young produced per adult significantly less than the number of young per adult in the control for the % effluent corresponding to significant nonlethal effects?

   CRITICAL DILUTION (73%): _____ YES _____ NO

PERCENT SURVIVAL

	Percent effluent					
Time of Reading	0%	23%	31%	41%	55%	73%
24h						
48h						
End of Test						

2. Fisher's Exact Test:

   Is the mean survival at test end significantly less than the control survival for the % effluent corresponding to lethality?

   CRITICAL DILUTION (73%): _____ YES _____ NO

3. Enter percent effluent corresponding to each NOEC\LOEC below:

   a.) NOEC survival = _____% effluent

   b.) LOEC survival = _____% effluent

   c.) NOEC reproduction = _____% effluent

   d.) LOEC reproduction = _____% effluent

TABLE 1 (SHEET 3 OF 4)

BIOMONITORING REPORTING

FATHEAD MINNOW LARVAE GROWTH AND SURVIVAL

		Date Time	Date Time
Dates and Times Composites Collected	No. 1	FROM: _____	TO: _____
	No. 2	FROM: _____	TO: _____
	No. 3	FROM: _____	TO: _____

Test initiated: _____am/pm _____date

Dilution water used: _____ Receiving water _____ Synthetic dilution water

FATHEAD MINNOW GROWTH DATA

Effluent Concentration	Average Dry Weight in replicate chambers					Mean Dry Weight	CV%*
	A	B	C	D	E		
0%							
23%							
31%							
41%							
55%							
73%							
PMSD							

* Coefficient of Variation = standard deviation x 100/mean

1. Dunnett's Procedure or Steel's Many-One Rank Test or Wilcoxon Rank Sum Test (with Bonferroni adjustment) or t-test (with Bonferroni adjustment) as appropriate:

   Is the mean dry weight (growth) at 7 days significantly less than the control's dry weight (growth) for the % effluent corresponding to significant nonlethal effects?

   CRITICAL DILUTION (73%): _____ YES _____ NO

TABLE 1 (SHEET 4 OF 4)

BIOMONITORING REPORTING

FATHEAD MINNOW GROWTH AND SURVIVAL TEST

FATHEAD MINNOW SURVIVAL DATA

Effluent Concentration	Percent Survival in replicate chambers					Mean percent survival			CV%*
	A	B	C	D	E	24h	48h	7 day	
0%									
23%									
31%									
41%									
55%									
73%									

* Coefficient of Variation = standard deviation x 100/mean

2. Dunnett's Procedure or Steel's Many-One Rank Test or Wilcoxon Rank Sum Test (with Bonferroni adjustment) or t-test (with Bonferroni adjustment) as appropriate:

   Is the mean survival at 7 days significantly less than the control survival for the % effluent corresponding to lethality?

   CRITICAL DILUTION (73%): _____ YES _____ NO

3. Enter percent effluent corresponding to each NOEC\LOEC below:

   a.) NOEC survival = _____% effluent

   b.) LOEC survival = _____% effluent

   c.) NOEC growth = _____% effluent

   d.) LOEC growth = _____% effluent

24-HOUR ACUTE BIOMONITORING REQUIREMENTS: FRESHWATER

The provisions of this section apply to Outfall 001 for WET testing.

1. Scope, Frequency, and Methodology

a. The permittee shall test the effluent for lethality in accordance with the provisions in this section. Such testing will determine compliance with Texas Surface Water Quality Standard 30 TAC § 307.6(e)(2)(B), which requires greater than 50% survival of the appropriate test organisms in 100% effluent for a 24-hour period.

b. Within 90 days of initial discharge of the final phase 1.1 MGD facility, the toxicity tests specified shall be conducted once per six months. The permittee shall conduct the following toxicity tests using the test organisms, procedures, and quality assurance requirements specified in this section of the permit and in accordance with "Methods for Measuring the Acute Toxicity of Effluents and Receiving Waters to Freshwater and Marine Organisms," fifth edition (EPA-821-R-02-012) or its most recent update:

1) Acute 24-hour static toxicity test using the water flea (*Daphnia pulex* or *Ceriodaphnia dubia*). A minimum of five replicates with eight organisms per replicate shall be used in the control and each dilution.

2) Acute 24-hour static toxicity test using the fathead minnow (*Pimephales promelas*). A minimum of five replicates with eight organisms per replicate shall be used in the control and each dilution.

A valid test result must be submitted for each reporting period. The permittee must report, and then repeat, an invalid test during the same reporting period. The repeat test shall include the control and the 100% effluent dilution and use the appropriate number of organisms and replicates, as specified above. An invalid test is defined as any test failing to satisfy the test acceptability criteria, procedures, and quality assurance requirements specified in the test methods and permit.

c. In addition to an appropriate control, a 100% effluent concentration shall be used in the toxicity tests. The control and dilution water shall consist of standard, synthetic, moderately hard, reconstituted water.

d. This permit may be amended to require a WET limit, a best management practice, a chemical-specific limit, or other appropriate actions to address toxicity. The permittee may be required to conduct a toxicity reduction evaluation (TRE) after multiple toxic events.

2. Required Toxicity Testing Conditions

a. Test Acceptance - The permittee shall repeat any toxicity test, including the control, if the control fails to meet a mean survival equal to or greater than 90%.

b. Dilution Water - In accordance with Part 1.c., the control and dilution water shall consist of standard, synthetic, moderately hard, reconstituted water.

c. Samples and Composites

1) The permittee shall collect one composite sample from Outfall 001.

2) The permittee shall collect the composite sample such that the sample is representative of any periodic episode of chlorination, biocide usage, or other potentially toxic substance being discharged.

3) The permittee shall initiate the toxicity tests within 36 hours after collection of the last portion of the composite sample. The sample shall be maintained at a temperature of 0-6 degrees Centigrade during collection, shipping, and storage.

4) If Outfall 001 ceases discharging during the collection of the effluent composite sample, the requirements for the minimum number of effluent portions are waived. However, the permittee must have collected a composite sample volume sufficient for completion of the required test. The abbreviated sample collection, duration, and methodology must be documented in the full report.

5) The effluent sample shall not be dechlorinated after sample collection.

3. Reporting

All reports, tables, plans, summaries, and related correspondence required in this section shall be submitted to the attention of the Standards Implementation Team (MC 150) of the Water Quality Division.

a. The permittee shall prepare a full report of the results of all tests conducted in accordance with the manual referenced in Part 1.b. for every valid and invalid toxicity test initiated.

b. The permittee shall routinely report the results of each biomonitoring test on the Table 2 forms provided with this permit.

1) Semiannual biomonitoring test results are due on or before July 20th and January 20th for biomonitoring conducted during the previous 6-month period.

2) Quarterly biomonitoring test results are due on or before April 20th, July 20th, and October 20th, and January 20th for biomonitoring conducted during the previous calendar quarter.

c. Enter the following codes for the appropriate parameters for valid tests only:

1) For the water flea, Parameter TIE3D, enter a “0” if the mean survival at 24 hours is greater than 50% in the 100% effluent dilution; if the mean survival is less than or equal to 50%, enter a “1.”

2) For the fathead minnow, Parameter TIE6C, enter a “0” if the mean survival at 24 hours is greater than 50% in the 100% effluent dilution; if the mean survival is less than or equal to 50%, enter a “1.”

d. Enter the following codes for retests only:

1) For retest number 1, Parameter 22415, enter a “0” if the mean survival at 24 hours is greater than 50% in the 100% effluent dilution; if the mean survival is less than or equal to 50%, enter a “1.”

2) For retest number 2, Parameter 22416, enter a "0" if the mean survival at 24 hours is greater than 50% in the 100% effluent dilution; if the mean survival is less than or equal to 50%, enter a "1."

4. Persistent Mortality

The requirements of this part apply when a toxicity test demonstrates significant lethality, which is defined as a mean mortality of 50% or greater of organisms exposed to the 100% effluent concentration for 24 hours.

a. The permittee shall conduct 2 additional tests (retests) for each species that demonstrates significant lethality. The two retests shall be conducted once per week for 2 weeks. Five effluent dilution concentrations in addition to an appropriate control shall be used in the retests. These effluent concentrations are 6%, 13%, 25%, 50% and 100% effluent. The first retest shall be conducted within 15 days of the laboratory determination of significant lethality. All test results shall be submitted within 20 days of test completion of the second retest. Test completion is defined as the 24th hour.

b. If one or both of the two retests specified in Part 4.a. demonstrates significant lethality, the permittee shall initiate the TRE requirements as specified in Part 5.

5. Toxicity Reduction Evaluation

a. Within 45 days of the retest that demonstrates significant lethality, the permittee shall submit a general outline for initiating a TRE. The outline shall include, but not be limited to, a description of project personnel, a schedule for obtaining consultants (if needed), a discussion of influent and effluent data available for review, a sampling and analytical schedule, and a proposed TRE initiation date.

b. Within 90 days of the retest that demonstrates significant lethality, the permittee shall submit a TRE action plan and schedule for conducting a TRE. The plan shall specify the approach and methodology to be used in performing the TRE. A TRE is a step-wise investigation combining toxicity testing with physical and chemical analyses to determine actions necessary to eliminate or reduce effluent toxicity to a level not effecting significant lethality at the critical dilution. The TRE action plan shall lead to the successful elimination of significant lethality for both test species defined in Part 1.b. At a minimum, the TRE action plan shall include the following:

1) Specific Activities - The TRE action plan shall specify the approach the permittee intends to utilize in conducting the TRE, including toxicity characterizations, identifications, confirmations, source evaluations, treatability studies, and alternative approaches. When conducting characterization analyses, the permittee shall perform multiple characterizations and follow the procedures specified in the document entitled "Methods for Aquatic Toxicity Identification Evaluations: Phase I Toxicity Characterization Procedures" (EPA/600/6-91/003) or alternate procedures. The permittee shall perform multiple identifications and follow the methods specified in the documents entitled "Methods for Aquatic Toxicity Identification Evaluations: Phase II Toxicity Identification Procedures for Samples Exhibiting Acute and Chronic Toxicity" (EPA/600/R-92/080) and "Methods for Aquatic Toxicity Identification Evaluations: Phase III Toxicity Confirmation Procedures for Samples Exhibiting Acute and Chronic Toxicity" (EPA/600/R-92/081). All characterization, identification, and confirmation tests shall be conducted in an orderly and logical progression;

2) Sampling Plan - The TRE action plan should describe sampling locations, methods, holding times, chain of custody, and preservation techniques. The effluent sample volume collected for all tests shall be adequate to perform the toxicity characterization/identification/confirmation procedures and chemical-specific analyses when the toxicity tests show significant lethality. Where the permittee has identified or suspects specific pollutant and source of effluent toxicity, the permittee shall conduct, concurrent with toxicity testing, chemical-specific analyses for the identified and suspected pollutant and source of effluent toxicity;

3) Quality Assurance Plan - The TRE action plan should address record keeping and data evaluation, calibration and standardization, baseline tests, system blanks, controls, duplicates, spikes, toxicity persistence in the samples, randomization, reference toxicant control charts, and mechanisms to detect artifactual toxicity; and

4) Project Organization - The TRE Action Plan should describe the project staff, project manager, consulting engineering services (where applicable), consulting analytical and toxicological services, etc.

c. Within 30 days of submittal of the TRE action plan and schedule, the permittee shall implement the TRE.

d. The permittee shall submit quarterly TRE activities reports concerning the progress of the TRE. The quarterly TRE activities reports are due on or before April 20th, July 20th, October 20th, and January 20th. The report shall detail information regarding the TRE activities including:

1) results and interpretation of any chemical-specific analyses for the identified and suspected pollutant performed during the quarter;

2) results and interpretation of any characterization, identification, and confirmation tests performed during the quarter;

3) any data and substantiating documentation that identifies the pollutant and source of effluent toxicity;

4) results of any studies/evaluations concerning the treatability of the facility's effluent toxicity;

5) any data that identifies effluent toxicity control mechanisms that will reduce effluent toxicity to the level necessary to eliminate significant lethality; and

6) any changes to the initial TRE plan and schedule that are believed necessary as a result of the TRE findings.

e. During the TRE, the permittee shall perform, at a minimum, quarterly testing using the more sensitive species. Testing for the less sensitive species shall continue at the frequency specified in Part 1.b.

f. If the effluent ceases to effect significant lethality, i.e., there is a cessation of lethality, the permittee may end the TRE. A cessation of lethality is defined as no significant lethality for a period of 12 consecutive weeks with at least weekly testing. At the end of the 12

weeks, the permittee shall submit a statement of intent to cease the TRE and may then resume the testing frequency specified in Part 1.b.

This provision accommodates situations where operational errors and upsets, spills, or sampling errors triggered the TRE, in contrast to a situation where a single toxicant or group of toxicants cause lethality. This provision does not apply as a result of corrective actions taken by the permittee. Corrective actions are defined as proactive efforts that eliminate or reduce effluent toxicity. These include, but are not limited to, source reduction or elimination, improved housekeeping, changes in chemical usage, and modifications of influent streams and effluent treatment.

The permittee may only apply this cessation of lethality provision once. If the effluent again demonstrates significant lethality to the same species, the permit will be amended to add a WET limit with a compliance period, if appropriate. However, prior to the effective date of the WET limit, the permittee may apply for a permit amendment removing and replacing the WET limit with an alternate toxicity control measure by identifying and confirming the toxicant and an appropriate control measure.

g. The permittee shall complete the TRE and submit a final report on the TRE activities no later than 18 months from the last test day of the retest that demonstrates significant lethality. The permittee may petition the Executive Director (in writing) for an extension of the 18-month limit. However, to warrant an extension the permittee must have demonstrated due diligence in its pursuit of the toxicity identification evaluation/TRE and must prove that circumstances beyond its control stalled the toxicity identification evaluation/TRE. The report shall specify the control mechanism that will, when implemented, reduce effluent toxicity as specified in Part 5.h. The report shall also specify a corrective action schedule for implementing the selected control mechanism.

h. Within 3 years of the last day of the test confirming toxicity, the permittee shall comply with 30 TAC § 307.6(e)(2)(B), which requires greater than 50% survival of the test organism in 100% effluent at the end of 24-hours. The permittee may petition the Executive Director (in writing) for an extension of the 3-year limit. However, to warrant an extension the permittee must have demonstrated due diligence in its pursuit of the toxicity identification evaluation/TRE and must prove that circumstances beyond its control stalled the toxicity identification evaluation/TRE.

The permittee may be exempted from complying with 30 TAC § 307.6(e)(2)(B) upon proving that toxicity is caused by an excess, imbalance, or deficiency of dissolved salts. This exemption excludes instances where individually toxic components (e.g., metals) form a salt compound. Following the exemption, this permit may be amended to include an ion-adjustment protocol, alternate species testing, or single species testing.

i. Based upon the results of the TRE and proposed corrective actions, this permit may be amended to modify the biomonitoring requirements where necessary, require a compliance schedule for implementation of corrective actions, specify a WET limit, specify a best management practice, and specify a chemical-specific limit.

j. Copies of any and all required TRE plans and reports shall also be submitted to the U.S. EPA Region 6 office, 6WQ-PO.

TABLE 2 (SHEET 1 OF 2)

WATER FLEA SURVIVAL

GENERAL INFORMATION

	Time	Date
Composite Sample Collected		
Test Initiated		

PERCENT SURVIVAL

Time	Rep	Percent effluent					
		0%	6%	13%	25%	50%	100%
24h	A						
	B						
	C						
	D						
	E						
	MEAN						

Enter percent effluent corresponding to the LC50 below:

24-hour LC50 = _____% effluent

TABLE 2 (SHEET 2 OF 2)

FATHEAD MINNOW SURVIVAL

GENERAL INFORMATION

	Time	Date
Composite Sample Collected		
Test Initiated		

PERCENT SURVIVAL

Time	Rep	Percent effluent					
		0%	6%	13%	25%	50%	100%
24h	A						
	B						
	C						
	D						
	E						
	MEAN						

Enter percent effluent corresponding to the LC50 below:

24-hour LC50 = _____% effluent

Attachment A1 – Buffer Zone Map
WQ0013314001 – City of Fulshear

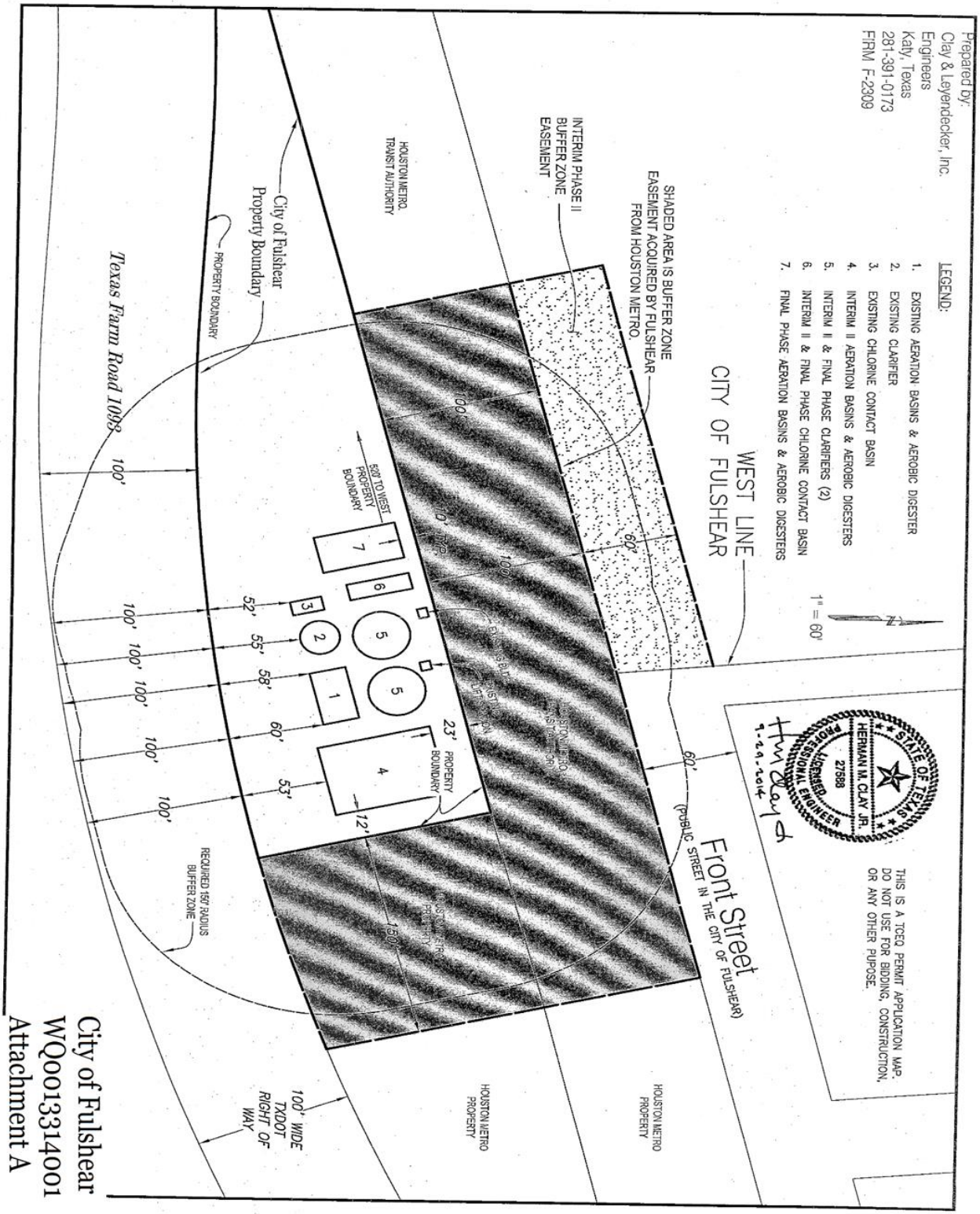

City of Fulshear
WQ0013314001
Attachment A

Attachment A2 – Buffer Zone Map 1.1 MGD
WQ0013314001 – City of Fulshear

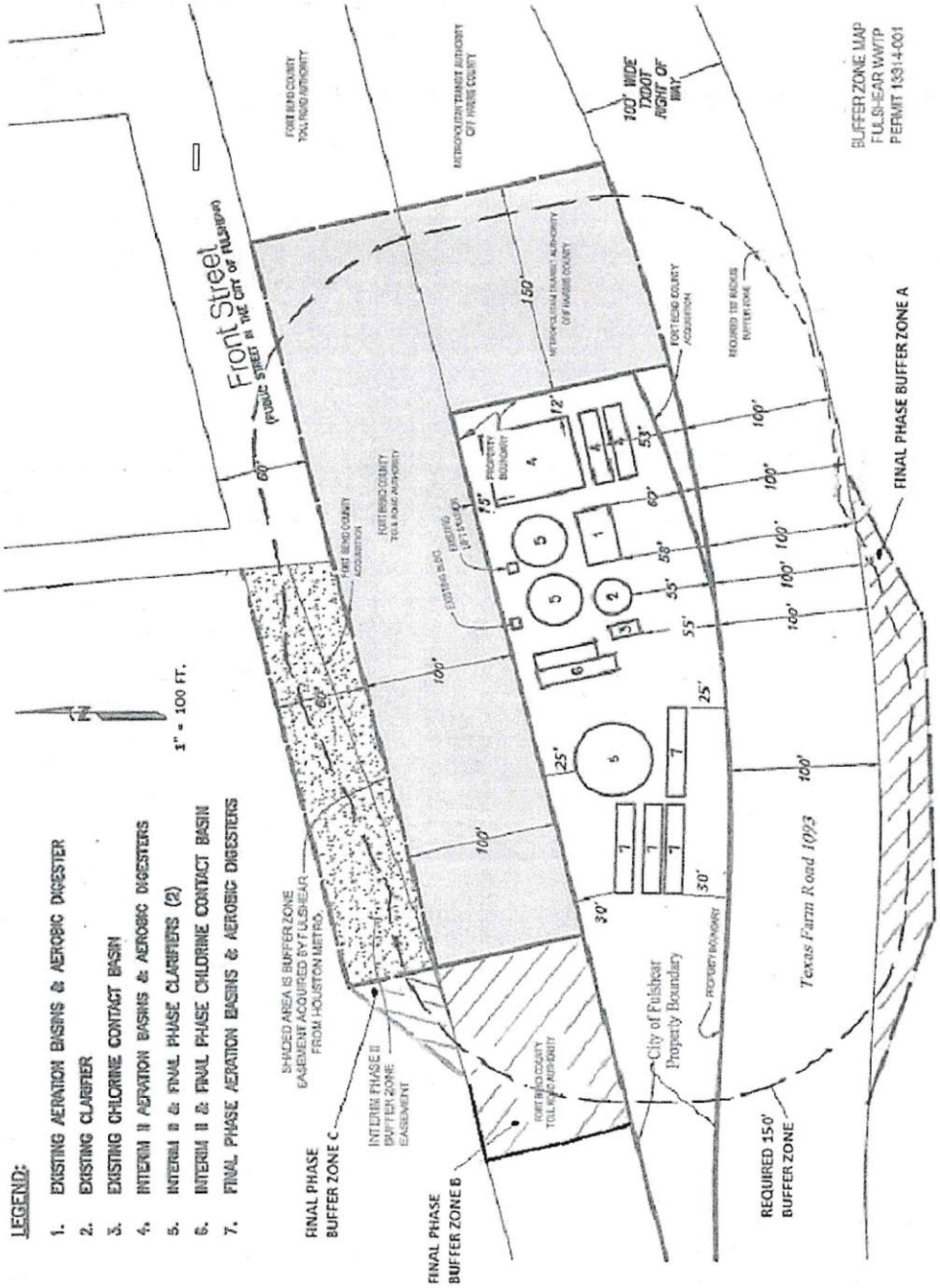

RECEIVED
AUG 24 2021
Water Quality Applications Team

ATTACHMENT NO. 5
BUFFER ZONE MAP
FULSHEAR 13314-001

FACT SHEET AND EXECUTIVE DIRECTOR'S PRELIMINARY DECISION

For draft Texas Pollutant Discharge Elimination System (TPDES) Permit No. WQ0013314001, EPA I.D. No. TX0101052, to discharge to water in the state.

Issuing Office:	Texas Commission on Environmental Quality P.O. Box 13087 Austin, Texas 78711-3087
Applicant:	City of Fulshear P.O. Box 279 Fulshear, Texas 77441
Prepared By:	Sonia Bhuiya Municipal Permits Team Wastewater Permitting Section (MC 148) Water Quality Division (512) 239-1205
Date:	August 8, 2025
Permit Action:	Renewal

1. EXECUTIVE DIRECTOR RECOMMENDATION

The Executive Director has made a preliminary decision that this permit, if issued, meets all statutory and regulatory requirements. The draft permit includes an expiration date of **five years from the date of issuance**.

2. APPLICANT ACTIVITY

The applicant has applied to the Texas Commission on Environmental Quality (TCEQ) for a renewal of the existing permit that authorizes the discharge of treated domestic wastewater at a daily average flow not to exceed 0.50 million gallons per day (MGD) in the Interim I phase, a daily average flow not to exceed 0.70 MGD in the Interim II phase, and an annual average flow not to exceed 1.10 MGD in the Final phase. The existing wastewater treatment facility serves the City of Fulshear.

3. FACILITY AND DISCHARGE LOCATION

The plant site is located at 30618 Farm-to-Market Road 1093, in the City of Fulshear, Fort Bend County, Texas 77441.

Outfall Location:

Outfall Number	Latitude	Longitude
001	29.687983 N	95.906293 W

The treated effluent is discharged to an unnamed tributary (locally known as Union Chapel Branch), thence to Bessies Creek, thence to Brazos River Below Navasota River in Segment No. 1202 of the Brazos River Basin. The unclassified receiving water uses are

minimal aquatic life use for unnamed tributary (locally known as Union Chapel Branch), and high aquatic life use for Bessies Creek. The designated uses for Segment No. 1202 are primary contact recreation, public water supply, and high aquatic life use.

4. TREATMENT PROCESS DESCRIPTION AND SEWAGE SLUDGE DISPOSAL

The City of Fulshear Wastewater Treatment Facility is an activated sludge process plant operated in the complete mix mode. Treatment units in the Interim I phase include a bar screen, five aeration basins, three final clarifiers, five sludge digesters, and one chlorine contact chamber. The Interim II phase will include a bar screen, seven aeration basins, three final clarifiers, seven sludge digesters, and one chlorine contact chamber. The Final phase will include a bar screen, eleven aeration basins, three final clarifiers, eleven sludge digesters, one chlorine contact chamber, and one dechlorination chamber. The facility is operating in the Interim I phase.

Sludge generated from the treatment facility is hauled by a registered transporter and disposed of at a TCEQ-authorized land application site, Jeffries Ranch, Permit No. WQ0004454000, in Waller County and Caldwell Ranch, Permit No. WQ0004465000, in Brazoria County. The draft permit also authorizes the disposal of sludge at a TCEQ-authorized land application site, co-disposal landfill, wastewater treatment facility, or facility that further processes sludge.

5. INDUSTRIAL WASTE CONTRIBUTION

The draft permit includes pretreatment requirements that are appropriate for a facility of this size and complexity. The City of Fulshear WWTP does not appear to receive significant industrial wastewater contributions. Based on the information provided by the permittee in the most recent TPDES permit application, the TCEQ determined that there are no significant industrial wastewater contributions currently being discharged to the permittee's POTW.

6. SUMMARY OF SELF-REPORTED EFFLUENT ANALYSES

The following is a summary of the applicant's effluent monitoring data for the period December 2019 through January 2025. The average of Daily Average value is computed by the averaging of all 30-day average values for the reporting period for each parameter: flow, five-day carbonaceous biochemical oxygen demand ($CBOD_5$), total suspended solids (TSS), ammonia nitrogen (NH_3-N). The average Daily Average value for *Escherichia coli* (*E. coli*) in colony-forming units (CFU) or most probable number (MPN) per 100 ml is calculated via geometric mean.

Parameter	Average of Daily Avg
Flow, MGD	0.31
$CBOD_5$, mg/l	4.09
TSS, mg/l	4.19
NH_3-N, mg/l	1.32
E. coli, CFU or MPN per 100 ml	1

7. DRAFT PERMIT CONDITIONS AND MONITORING REQUIREMENTS

The effluent limitations and monitoring requirements for those parameters that are

limited in the draft permit are as follows:

A. INTERIM I PHASE EFFLUENT LIMITATIONS AND MONITORING REQUIREMENTS

The daily average flow of effluent shall not exceed 0.50 MGD, nor shall the average discharge during any two-hour period (2-hour peak) exceed 1,042 gallons per minute.

Parameter	30-Day Average		7-Day Average	Daily Maximum
	mg/l	lbs/day	mg/l	mg/l
$CBOD_5$	10	42	15	25
TSS	15	63	25	40
NH_3-N	3	13	6	10
DO (minimum)	4.0	N/A	N/A	N/A
E. coli, CFU or MPN per 100 ml	126	N/A	N/A	399

The pH shall not be less than 6.0 standard units nor greater than 9.0 standard units and shall be monitored twice per month by grab sample. There shall be no discharge of floating solids or visible foam in other than trace amounts and no discharge of visible oil.

The effluent shall contain a total chlorine residual of at least 1.0 mg/l after a detention time of at least 20 minutes (based on peak flow) and shall be monitored daily by grab sample. The permittee shall dechlorinate the chlorinated effluent to less than 0.1 mg/l total chlorine residual and shall monitor total chlorine residual daily by grab sample after the dechlorination process. An equivalent method of disinfection may be substituted only with prior approval of the Executive Director.

Parameter	Monitoring Requirement
Flow, MGD	Continuous
$CBOD_5$	One/week
TSS	One/week
NH_3-N	One/week
DO	One/week
E. coli	One/month

B. INTERIM II PHASE EFFLUENT LIMITATIONS AND MONITORING REQUIREMENTS

The daily average flow of effluent shall not exceed 0.70 MGD, nor shall the average discharge during any two-hour period (2-hour peak) exceed 1,458 gallons per minute.

Parameter	30-Day Average		7-Day Average	Daily Maximum
	mg/l	lbs/day	mg/l	mg/l
$CBOD_5$	10	58	15	25

TSS	15	88	25	40
NH_3-N	3	18	6	10
DO (minimum)	4.0	N/A	N/A	N/A
E. coli, CFU or MPN/100 ml	126	N/A	N/A	399

The pH shall not be less than 6.0 standard units nor greater than 9.0 standard units and shall be monitored twice per month by grab sample. There shall be no discharge of floating solids or visible foam in other than trace amounts and no discharge of visible oil.

The effluent shall contain a total chlorine residual of at least 1.0 mg/l and shall not exceed a total chlorine residual of 4.0 mg/l after a detention time of at least 20 minutes (based on peak flow) and shall be monitored daily by grab sample. An equivalent method of disinfection may be substituted only with prior approval of the Executive Director.

Parameter	Monitoring Requirement
Flow, MGD	Continuous
$CBOD_5$	One/week
TSS	One/week
NH_3-N	One/week
DO	One/week
E. coli	Two/month

C. FINAL PHASE EFFLUENT LIMITATIONS AND MONITORING REQUIREMENTS

The annual average flow of effluent shall not exceed 1.10 MGD, nor shall the average discharge during any two-hour period (2-hour peak) exceed 2,292 gallons per minute.

Parameter	30-Day Average		7-Day Average	Daily Maximum
	mg/l	lbs/day	mg/l	mg/l
$CBOD_5$	10	92	15	25
TSS	15	138	25	40
NH_3-N	3	28	6	10
DO (minimum)	4.0	N/A	N/A	N/A
E. coli, CFU or MPN/100 ml	126	N/A	N/A	399

The pH shall not be less than 6.0 standard units nor greater than 9.0 standard units and shall be monitored once per week by grab sample. There shall be no discharge of floating solids or visible foam in other than trace amounts and no discharge of visible oil.

The effluent shall contain a total chlorine residual of at least 1.0 mg/l after a detention time of at least 20 minutes (based on peak flow) and shall be monitored daily by grab sample. The permittee shall dechlorinate the chlorinated effluent to less than 0.1 mg/l total chlorine residual and shall monitor total

chlorine residual daily by grab sample after the dechlorination process. An equivalent method of disinfection may be substituted only with prior approval of the Executive Director.

Parameter	Monitoring Requirement
Flow, MGD	Continuous
$CBOD_5$	Two/week
TSS	Two/week
NH_3-N	Two/week
DO	Two/week
E. coli	One/week

D. SEWAGE SLUDGE REQUIREMENTS

The draft permit includes Sludge Provisions according to the requirements of 30 TAC Chapter 312, Sludge Use, Disposal, and Transportation. Sludge generated from the treatment facility is hauled by a registered transporter and disposed of at a TCEQ-authorized land application site, Jeffries Ranch, Permit No. WQ0004454000, in Waller County and Caldwell Ranch, Permit No. WQ0004465000, in Brazoria County. The draft permit also authorizes the disposal of sludge at a TCEQ-authorized land application site, co-disposal landfill, wastewater treatment facility, or facility that further processes sludge.

E. PRETREATMENT REQUIREMENTS

Permit requirements for pretreatment are based on TPDES regulations contained in 30 TAC Chapter 305, which references 40 Code of Federal Regulations (CFR) Part 403, "General Pretreatment Regulations for Existing and New Sources of Pollution" *[rev. Federal Register/ Vol. 70/ No. 198/ Friday, October 14, 2005/ Rules and Regulations, pages 60134-60798]*. The permit includes specific requirements that establish responsibilities of local government, industry, and the public to implement the standards to control pollutants which pass through or interfere with treatment processes in publicly owned treatment works or which may contaminate the sewage sludge. This permit has appropriate pretreatment language for a facility of this size and complexity.

F. WHOLE EFFLUENT TOXICITY (BIOMONITORING) REQUIREMENTS

(1) The draft permit includes chronic freshwater biomonitoring requirements as follows. The permit requires five dilutions in addition to the control (0% effluent) to be used in the toxicity tests. These additional effluent concentrations shall be 24%, 31%, 42%, 56%, and 74%, The low-flow effluent concentration (critical dilution) is defined as 74% effluent. The critical dilution is in accordance with the "Aquatic Life Criteria" section of the "Water Quality Based Effluent Limitations/Conditions" section.

(a) Chronic static renewal survival and reproduction test using the water flea (*Ceriodaphnia dubia*). The frequency of the testing is once per six months for at least the first year of testing, after which the permittee may apply for a testing frequency reduction.

(b) Chronic static renewal 7-day larval survival and growth test using the fathead minnow (*Pimephales promelas*). The frequency of the testing is once per six months for at least the first year of testing, after which the permittee may apply for a testing frequency reduction.

(2) The draft permit includes the following minimum 24-hour acute freshwater biomonitoring requirements at a frequency of once per six months:

(a) Acute 24-hour static toxicity test using the water flea (*Daphnia pulex* or *Ceriodaphnia dubia*).

(b) Acute 24-hour static toxicity test using the fathead minnow (*Pimephales promelas*).

G. SUMMARY OF CHANGES FROM APPLICATION

None.

H. SUMMARY OF CHANGES FROM EXISTING PERMIT

The Standard Permit Conditions, Sludge Provisions, Other Requirements, and Biomonitoring sections of the draft permit have been updated.

For Publicly Owned Treatment Works (POTWs), effective December 21, 2025, the permittee must submit the written report for unauthorized discharges and unanticipated bypasses that exceed any effluent limit in the permit using the online electronic reporting system available through the TCEQ website unless the permittee requests and obtains an electronic reporting waiver.

Certain accidental discharges or spills of treated or untreated wastewater from wastewater treatment facilities or collection systems owned or operated by a local government may be reported on a monthly basis in accordance with 30 TAC § 305.132.

The draft permit includes all updates based on the 30 TAC § 312 rule change effective April 23, 2020.

8. DRAFT PERMIT RATIONALE

A. TECHNOLOGY-BASED EFFLUENT LIMITATIONS/CONDITIONS

Regulations promulgated in Title 40 of the CFR require that technology-based limitations be placed in wastewater discharge permits based on effluent limitations guidelines, where applicable, or on best professional judgment (BPJ) in the absence of guidelines.

Effluent limitations for maximum and minimum pH are in accordance with 40 CFR § 133.102(c) and 30 TAC § 309.1(b).

B. WATER QUALITY SUMMARY AND COASTAL MANAGEMENT PLAN

(1) WATER QUALITY SUMMARY

The treated effluent is discharged to an unnamed tributary (locally known as Union Chapel Branch), thence to Bessies Creek, thence to Brazos River Below Navasota River in Segment No. 1202 of the Brazos River Basin. The unclassified receiving water uses are minimal aquatic life use for unnamed tributary (locally known as Union Chapel Branch), and high aquatic life use for Bessies Creek. The designated uses for Segment No. 1202 are primary contact recreation, public water supply, and high aquatic life use. The effluent limitations in the draft permit will maintain and protect the existing instream uses. All determinations are preliminary and subject to additional review and/or revisions.

The Houston Toad (*Bufo houstonensis* Sanders), an endangered aquatic-dependent species of critical concern, occurs within the Segment 1202's watershed as well as the 12070104 United States Geological Survey hydrologic unit code. This determination is based on the United States Fish and Wildlife Service's (USFWS) biological opinion on the State of Texas authorization of the Texas Pollutant Discharge Elimination System (TPDES; September 14, 1998, October 21, 1998 update). To make this determination for TPDES permits, TCEQ and EPA only consider aquatic or aquatic dependent species occurring in watersheds of critical concern or high priority as listed in Appendix A of the USFWS biological opinion. The determination is subject to reevaluation due to subsequent updates or amendments to the biological opinion. Species distribution information for the Segment 1202 watershed is provided by the United States Fish and Wildlife Service and documents the toad's presence solely in the vicinity of Deep Creek in Austin County, which is farther up the watershed from the facility associated with this permit action. Based upon this information, it is determined that the facility's discharge is not expected to impact the Houston Toad. The permit does not require EPA review with respect to the presence of endangered or threatened species.

Segment 1202 is not currently listed on the State's inventory of impaired and threatened waters (the 2024 CWA § 303(d) list). However, Bessie's Creek (1202I) is currently listed for elevated bacteria from the confluence of the Brazos River in Fort Bend County upstream to confluence of Bessie's Bayou west of Brookshire (Assessment Unit 1202I_01). This facility is designed to provide adequate disinfection and, when operated properly, should not add to the bacterial impairment of the segment. In addition, in order to ensure that the proposed discharge meets the stream bacterial standard, an effluent limitation of 126 CFU or MPN of *E. coli* per 100 ml has been added to the draft permit.

The pollutant analysis of treated effluent provided by the permittee in the application indicated 378mg/l total dissolved solids (TDS), 24.5 mg/l sulfate, and 106 mg/l chloride present in the effluent. The segment criteria for Segment No. 1202 are 750 mg/l for TDS, 200 mg/l for sulfate, and 300 mg/l for chlorides. Based on dissolved solids screening, no

additional limits or monitoring requirements are needed for total dissolved solids, chloride, or sulfate. See Attachement A

The effluent limitations and conditions in the draft permit comply with EPA-approved portions of the 2018 Texas Surface Water Quality Standards (TSWQS), 30 TAC §§ 307.1 - 307.10, effective March 1, 2018; 2014 TSWQS, effective March 6, 2014; 2010 TSWQS, effective July 22, 2010; and 2000 TSWQS, effective July 26, 2000.

(2) CONVENTIONAL PARAMETERS

Effluent limitations for the conventional effluent parameters (i.e., Five-Day Biochemical Oxygen Demand or Five-Day Carbonaceous Biochemical Oxygen Demand, Ammonia Nitrogen, etc.) are based on stream standards and waste load allocations for water quality-limited streams as established in the TSWQS and the State of Texas Water Quality Management Plan (WQMP).

The existing effluent limits have been reviewed for consistency with the State of Texas Water Quality Management Plan (WQMP). The existing limits are consistent with the approved WQMP.

The effluent limitations in the draft permit meet the requirements for secondary treatment and the requirements for disinfection according to 30 TAC Chapter 309, Subchapter A: Effluent Limitations.

(3) COASTAL MANAGEMENT PLAN

The facility is not located in the Coastal Management Program boundary.

C. WATER QUALITY-BASED EFFLUENT LIMITATIONS/CONDITIONS

(1) GENERAL COMMENTS

The Texas Surface Water Quality Standards (30 TAC Chapter 307) state that surface waters will not be toxic to man, or to terrestrial or aquatic life. The methodology outlined in the *Procedures to Implement the Texas Surface Water Quality Standards* (IP) (June 2010) is designed to ensure compliance with 30 TAC Chapter 307. Specifically, the methodology is designed to ensure that no source will be allowed to discharge any wastewater that: (1) results in instream aquatic toxicity; (2) causes a violation of an applicable narrative or numerical state water quality standard; (3) results in the endangerment of a drinking water supply; or (4) results in aquatic bioaccumulation that threatens human health.

(2) AQUATIC LIFE CRITERIA

(a) SCREENING

Water quality-based effluent limitations are calculated from freshwater aquatic life criteria found in Table 1 of the Texas Surface Water Quality

Standards (30 TAC Chapter 307).

There is no mixing zone or zone of initial dilution for this discharge directly to an intermittent stream; acute freshwater criteria apply at the end of pipe. Chronic freshwater criteria are applied in the perennial freshwater stream.

For the intermittent stream, the percent effluent for acute protection of aquatic life is 100% because the 7Q2 of the intermittent stream is 0.0 cfs. This effluent percentage also provides acute protection of aquatic life in the perennial stream. TCEQ uses the mass balance equation to estimate dilution in the perennial stream during critical conditions. The estimated dilution for chronic protection of aquatic life is calculated using the permitted flow of 1.10 MGD and the 7-day, 2-year (7Q2) flow of 0.59 cfs for an unnamed tributary (Union Chapel Branch) within three miles of Bessies Creek the perennial stream. The following critical effluent percentages are being used:

Acute Effluent %:	100%	Chronic Effluent %:	74.26%

Waste load allocations (WLAs) are calculated using the above estimated effluent percentages, criteria outlined in the Texas Surface Water Quality Standards, and partitioning coefficients for metals (when appropriate and designated in the implementation procedures). The WLA is the end-of-pipe effluent concentration that can be discharged when, after mixing in the receiving stream, instream numerical criteria will not be exceeded. From the WLA, a long-term average (LTA) is calculated using a log normal probability distribution, a given coefficient of variation (0.6), and a 90th percentile confidence level. The LTA is the long-term average effluent concentration for which the WLA will never be exceeded using a selected percentile confidence level. The lower of the two LTAs (acute and chronic) is used to calculate a daily average and daily maximum effluent limitation for the protection of aquatic life using the same statistical considerations with the 99th percentile confidence level and a standard number of monthly effluent samples collected (12).

Assumptions used in deriving the effluent limitations include segment values for hardness, chlorides, pH, and TSS according to the segment-specific values contained in the TCEQ guidance document *Procedures to Implement the Texas Surface Water Quality Standards*. The segment values are 160 mg/l for hardness (as calcium carbonate), 86 mg/l for chlorides, 7.7 standard units for pH, and 32 mg/l for TSS. For additional details on the calculation of water quality-based effluent limitations, refer to the TCEQ guidance document.

TCEQ practice for determining significant potential is to compare the reported analytical data against percentages of the calculated daily average water quality-based effluent limitation. Permit limitations are required when analytical data reported in the application exceeds 85% of the calculated daily average water quality-based effluent limitation. Monitoring and reporting is required when analytical data reported in the

application exceeds 70% of the calculated daily average water quality-based effluent limitation. See Attachment B of this Fact Sheet.

(b) PERMIT ACTION

Analytical data reported in the application was screened against calculated water quality-based effluent limitations for the protection of aquatic life. Reported analytical data does not exceed 70% of the calculated daily average water quality-based effluent limitations for aquatic life protection.

(3) AQUATIC ORGANISM BIOACCUMULATION CRITERIA

(a) SCREENING

Water quality-based effluent limitations for the protection of human health are calculated using criteria for the consumption of freshwater fish tissue found in Table 2 of the Texas Surface Water Quality Standards (30 TAC Chapter 307). Freshwater fish tissue bioaccumulation criteria are applied for human health protection in the perennial stream. TCEQ uses the mass balance equation to estimate dilution in the perennial stream during average flow conditions. The estimated dilution for human health protection is calculated using the permitted flow of 1.10 MGD and the harmonic mean flow of 0.79 cfs for an unnamed tributary (Union Chapel Branch) within three miles of Bessies Creek The following critical effluent percentage is being used:

Human Health Effluent %: 68.298%

Water quality-based effluent limitations for human health protection against the consumption of fish tissue are calculated using the same procedure as outlined for calculation of water quality-based effluent limitations for aquatic life protection. A 99th percentile confidence level in the long-term average calculation is used with only one long-term average value being calculated.

Significant potential is again determined by comparing reported analytical data against 70% and 85% of the calculated daily average water quality-based effluent limitation. See Attachment B of this Fact Sheet.

(b) PERMIT ACTION

Reported analytical data does not exceed 70% of the calculated daily average water quality-based effluent limitation for human health protection.

(4) DRINKING WATER SUPPLY PROTECTION

(a) SCREENING

Water Quality Segment No. 1202, which receives the discharge from this

facility, is designated as a public water supply. The discharge point is located at a distance greater than three miles from the classified segment. Screening reported analytical data of the effluent against water quality-based effluent limitations calculated for the protection of a drinking water supply is not applicable due to the distance between the discharge point and the classified segment.

(b) PERMIT ACTION

Criteria in the "Water and Fish" section of Table 2 do not distinguish if the criteria is based on a drinking water standard or the combined effects of ingestion of drinking water and fish tissue. Effluent limitations or monitoring requirements to protect the drinking water supply (and other human health effects) were previously calculated and outlined in the aquatic organism bioaccumulation criteria section of this fact sheet.

(5) WHOLE EFFLUENT TOXICITY (BIOMONITORING) CRITERIA

(a) SCREENING

TCEQ has determined that there may be pollutants present in the effluent that may have the potential to cause toxic conditions in the receiving stream. Whole effluent biomonitoring is the most direct measure of potential toxicity that incorporates the effects of synergism of effluent components and receiving stream water quality characteristics. Biomonitoring of the effluent is, therefore, required as a condition of this permit to assess potential toxicity.

The current effluent flow from this facility is less than 1.1 MGD. Therefore, there is no WET testing history to review. The permittee will be required to initiate WET testing within 90 days of initial discharge of the final phase 1.1 MGD facility.

A reasonable potential (RP) determination was performed in accordance with 40 CFR § 122.44(d)(1)(ii) to determine whether the discharge will reasonably be expected to cause or contribute to an exceedance of a state water quality standard or criterion within that standard. Each test species is evaluated separately. The RP determination is based on representative data from the previous three years of WET testing. This determination was performed in accordance with the methodology outlined in the TCEQ letter to the EPA dated December 28, 2015, and approved by the EPA in a letter dated December 28, 2015.

With no WET testing history, and therefore zero failures, a determination of no RP was made. WET limits are not required, and the permittee may be eligible for the testing frequency reduction after one year of quarterly testing occurs.

(b) PERMIT ACTION

The test species are appropriate to measure the toxicity of the effluent

consistent with the requirements of the State water quality standards. The biomonitoring frequency has been established to reflect the likelihood of ambient toxicity and to provide data representative of the toxic potential of the facility's discharge. This permit may be reopened to require effluent limits, additional testing, and/or other appropriate actions to address toxicity if biomonitoring data show actual or potential ambient toxicity to be the result of the permittee's discharge to the receiving stream or water body.

(6) WHOLE EFFLUENT TOXICITY CRITERIA (24-HOUR ACUTE)

(a) SCREENING

The draft permit includes 24-hour acute freshwater biomonitoring language.

(b) PERMIT ACTION

The effluent flow from this facility was previously less than 1.1 MGD. Therefore, there is no WET testing history to review. The permittee will be required to initiate WET testing within 90 days of initial discharge of the final phase 1.1 MGD facility.

9. WATER QUALITY VARIANCE REQUESTS

No variance requests have been received.

10. PROCEDURES FOR FINAL DECISION

When an application is declared administratively complete, the Chief Clerk sends a letter to the applicant advising the applicant to publish the Notice of Receipt of Application and Intent to Obtain Permit in the newspaper. In addition, the Chief Clerk instructs the applicant to place a copy of the application in a public place for review and copying in the county where the facility is or will be located. This application will be in a public place throughout the comment period. The Chief Clerk also mails this notice to any interested persons and, if required, to landowners identified in the permit application. This notice informs the public about the application and provides that an interested person may file comments on the application or request a contested case hearing or a public meeting.

Once a draft permit is completed, it is sent, along with the Executive Director's preliminary decision, as contained in the technical summary or fact sheet, to the Chief Clerk. At that time, the Notice of Application and Preliminary Decision will be mailed to the same people and published in the same newspaper as the prior notice. This notice sets a deadline for making public comments. The applicant must place a copy of the Executive Director's preliminary decision and draft permit in the public place with the application.

Any interested person may request a public meeting on the application until the deadline for filing public comments. A public meeting is intended for the taking of public comment and is not a contested case proceeding.

After the public comment deadline, the Executive Director prepares a response to all significant public comments on the application or the draft permit raised during the public comment period. The Chief Clerk then mails the Executive Director's response to comments and final decision to people who have filed comments, requested a contested case hearing, or requested to be on the mailing list. This notice provides that if a person is not satisfied with the Executive Director's response and decision, they can request a contested case hearing or file a request to reconsider the Executive Director's decision within 30 days after the notice is mailed.

The Executive Director will issue the permit unless a written hearing request or request for reconsideration is filed within 30 days after the Executive Director's response to comments and final decision is mailed. If a hearing request or request for reconsideration is filed, the Executive Director will not issue the permit and will forward the application and request to the TCEQ Commissioners for their consideration at a scheduled Commission meeting. If a contested case hearing is held, it will be a legal proceeding similar to a civil trial in state district court.

If the Executive Director calls a public meeting or the Commission grants a contested case hearing as described above, the Commission will give notice of the date, time, and place of the meeting or hearing. If a hearing request or request for reconsideration is made, the Commission will consider all public comments in making its decision and shall either adopt the Executive Director's response to public comments or prepare its own response.

For additional information about this application, contact Sonia Bhuiya at (512) 239-1205.

11. ADMINISTRATIVE RECORD

The following items were considered in developing the draft permit:

A. PERMIT(S)

TPDES Permit No. WQ0013314001 issued on November 14, 2022.

B. APPLICATION

Application received on January 31, 2025, and additional information received on February 26, 2025.

C. MEMORANDA

Interoffice Memoranda from the Water Quality Assessment Section of the TCEQ Water Quality Division. Interoffice Memorandum from the Pretreatment Team of the TCEQ Water Quality Division.

D. MISCELLANEOUS

Federal Clean Water Act § 402; Texas Water Code § 26.027; 30 TAC Chapters 30, 305, 309, 312, and 319; Commission policies; and U.S. Environmental Protection Agency guidelines.

Texas Surface Water Quality Standards, 30 TAC §§ 307.1 - 307.10.

Procedures to Implement the Texas Surface Water Quality Standards (IP), Texas Commission on Environmental Quality, June 2010, as approved by the U.S. Environmental Protection Agency, and the IP, January 2003, for portions of the 2010 IP not approved by the U.S. Environmental Protection Agency.

Texas 2022 Clean Water Act Section 303(d) List, Texas Commission on Environmental Quality, June 1, 2022; approved by the U.S. Environmental Protection Agency on July 7, 2022.

Texas Natural Resource Conservation Commission, Guidance Document for Establishing Monitoring Frequencies for Domestic and Industrial Wastewater Discharge Permits, Document No. 98-001.000-OWR-WQ, May 1998.

Attachment A: Screening Calculations for Total Dissolved Solids, Chloride, and Sulfate

Screening Calculations for Total Dissolved Solids, Chloride, and Sulfate
Menu 2 - Discharge to an Intermittent Stream within 3 Miles of a Perennial Stream

Screen the Intermittent Stream

Applicant Name:	**City of Fulshear**
Permit Number, Outfall:	**WQ0013314001, Outfall 001**
Segment Number:	**1202**

Enter values needed for screening:			**Data Source (edit if different)**
TDS CC - segment criterion - TDS	**750**	mg/L	2018 TSWQS, Appendix A
Cl CC - segment criterion - chloride	**300**	mg/L	2018 TSWQS, Appendix A
SO4 CC - segment criterion - sulfate	**200**	mg/L	2018 TSWQS, Appendix A
TDS CE - average effluent concentration - TDS	**378**	mg/L	Permit application
Cl CE - average effluent concentration - chloride	**106**	mg/L	Permit application
SO4 CE - average effluent concentration - sulfate	**24.5**	mg/L	Permit application

TDS Screening

The TDS screening value is determined by first calculating an initial TDS concentration, C_{TDS}, as follows:

$$C_{TDS} = (\text{TDS CC} / 500 \text{ mg/L}) * 2{,}500 \text{ mg/L}$$

Where:	C_{TDS} = TDS concentration used to determine Csv screening value TDS CC = TDS criterion at the first downstream segment 500 mg/L = the median TDS concentration in Texas streams 2,500 mg/L = the minimum TDS screening value

C_{TDS} = 3750 mg/L

The next step is to use the initial C_{TDS} to set the actual TDS screening value, TDS Csv, using the following table:

If C_{TDS}		**Then TDS Csv**
≤ 2,500 mg/L	=	2,500 mg/L
> 2,500 mg/L but ≤ 6,000 mg/L	=	C_{TDS}
> 6,000 mg/L	=	6,000 mg/L

Some specific types of intermittent streams have alternative screening values (Csv):

Specific Type of Intermittent Stream	If C_{TDS} is	Default Csv =
Dry except for short-term flow in immediate response to rainfall.	< 4,000 mg/L	4,000 mg/L
	≥ 4,000 mg/L	C_{TDS}
Constructed ditch conveying stormwater and wastewater, considered water in the state.	< 4,000 mg/L	4,000 mg/L
	≥ 4,000 mg/L	C_{TDS}
Within 3 miles of tidal waters.	—	6,000 mg/L

Once TDS Csv is established, the next step is to compare the effluent TDS concentration, TDS CE, to the screening value. Control measures, which may include effluent limitations, are considered for TDS if the effluent TDS is greater than the screening value.

Values needed for Screening			Data Source
TDS CE - average effluent TDS concentration	378	mg/L	Permit application
TDS Csv - TDS screening value	**3750**	mg/L	Determined above

No control measures needed if:	378	≤	3750
Consider control measures if:	378	>	3750

No control measures needed for TDS

Chloride Screening

If TDS limits are necessary or there are concerns about chloride, additional screening can be performed for chloride. First calculate the screening value for chloride, Cl Csv, as follows:

Cl Csv = (TDS Csv /TDS CC) * Cl CC

Where:	Cl Csv = chloride screening value
	TDS Csv = TDS screening value
	TDS CC = TDS criterion at the first downstream segment
	Cl CC - chloride criterion at the first downstream segment

Cl Csv = **1500** mg/L

Once the Cl Csv is established, the next step is to compare the effluent chloride concentration, Cl CE, to the screening value. Control measures, which may include effluent limitations, are considered for chloride if the effluent chloride is greater than the screening value.

Values needed for Screening			Data Source
Cl CE - average effluent chloride concentration	106	mg/L	Permit application

Cl Csv - chloride screening value	1500	mg/L	Determined above

No control measures needed if:	106	≤	1500
Consider control measures if:	106	>	1500

No control measures needed for chloride

Attachment B: Calculated Water Quality Based Effluent Limitations

TEXTOX MENU #2 - INTERMITTENT STREAM WITHIN 3 MILES OF A FRESHWATER PERENNIAL STREAM/RIVER

The water quality-based effluent limitations developed below are calculated using:

Table 1, 2014 Texas Surface Water Quality Standards (30 TAC 307) for Freshwater Aquatic Life
Table 2, 2018 Texas Surface Water Quality Standards for Human Health
"Procedures to Implement the Texas Surface Water Quality Standards," TCEQ, June 2010

PERMIT INFORMATION

Permittee Name:	City of Fulshear
TPDES Permit No.:	WQ0013314001
Outfall No.:	001
Prepared by:	Sonia Bhuiya
Date:	August 12, 2025

DISCHARGE INFORMATION

Intermittent Receiving Waterbody:	an unnamed tributary (Union Chapel Branch) within three miles of Bessies Creek
Perennial Stream/River within 3 Miles:	
Segment No.:	1202
TSS (mg/L):	32
pH (Standard Units):	7.7
Hardness (mg/L as $CaCO_3$):	160
Chloride (mg/L):	86
Effluent Flow for Aquatic Life (MGD):	1.1
Critical Low Flow [7Q2] (cfs) for intermittent:	0
Critical Low Flow [7Q2] (cfs) for perennial:	0.59
% Effluent for Chronic Aquatic Life (Mixing Zone):	74.26
% Effluent for Acute Aquatic Life (ZID):	100
Effluent Flow for Human Health (MGD):	1.1
Harmonic Mean Flow (cfs) for perennial:	0.79
% Effluent for Human Health:	68.298
Human Health Criterion (select: PWS, FISH, or INC)	**FISH**

CALCULATE DISSOLVED FRACTION (AND ENTER WATER EFFECT RATIO IF APPLICABLE):

Stream/River Metal	*Intercept (b)*	*Slope (m)*	*Partition Coefficient (Kp)*	*Dissolved Fraction (Cd/Ct)*	*Source*	*Water Effect Ratio (WER)*	*Source*
Aluminum	N/A	N/A	N/A	1.00	Assumed	1.00	Assumed
Arsenic	5.68	-0.73	38127.69	0.450		1.00	Assumed
Cadmium	6.60	-1.13	79283.08	0.283		1.00	Assumed
Chromium (total)	6.52	-0.93	#########	0.192		1.00	Assumed

Chromium (trivalent)	6.52	-0.93	#########	0.192		1.00	Assumed
Chromium (hexavalent)	N/A	N/A	N/A	1.00	Assumed	1.00	Assumed
Copper	6.02	-0.74	80572.90	0.279		1.00	Assumed
Lead	6.45	-0.80	#########	0.151		1.00	Assumed
Mercury	N/A	N/A	N/A	1.00	Assumed	1.00	Assumed
Nickel	5.69	-0.57	67930.45	0.315		1.00	Assumed
Selenium	N/A	N/A	N/A	1.00	Assumed	1.00	Assumed
Silver	6.38	-1.03	67560.91	0.316		1.00	Assumed
Zinc	6.10	-0.70	#########	0.219		1.00	Assumed

AQUATIC LIFE

CALCULATE DAILY AVERAGE AND DAILY MAXIMUM EFFLUENT LIMITATIONS:

Parameter	***FW Acute Criterion (µg/L)***	***FW Chronic Criterion (µg/L)***	***WLAa (µg/L)***	***WLAc (µg/L)***	***LTAa (µg/L)***	***LTAc (µg/L)***	***Daily Avg. (µg/L)***	***Daily Max. (µg/L)***
Aldrin	3.0	N/A	3.00	N/A	1.72	N/A	2.52	5.34
Aluminum	991	N/A	991	N/A	568	N/A	834	1765
Arsenic	340	150	755	448	433	345	507	1073
Cadmium	13.6	0.341	47.9	1.62	27.5	1.25	1.83	3.88
Carbaryl	2.0	N/A	2.00	N/A	1.15	N/A	1.68	3.56
Chlordane	2.4	0.004	2.40	0.00539	1.38	0.00415	0.00609	0.0128
Chlorpyrifos	0.083	0.041	0.0830	0.0552	0.0476	0.0425	0.0624	0.132
Chromium (trivalent)	837	109	4371	766	2505	590	866	1833
Chromium (hexavalent)	15.7	10.6	15.7	14.3	9.00	11.0	13.2	27.9
Copper	22.1	14.1	79.1	68.2	45.3	52.5	66.6	141
Cyanide (free)	45.8	10.7	45.8	14.4	26.2	11.1	16.3	34.5
4,4'-DDT	1.1	0.001	1.10	0.00135	0.630	0.00104	0.00152	0.00322
Demeton	N/A	0.1	N/A	0.135	N/A	0.104	0.152	0.322
Diazinon	0.17	0.17	0.170	0.229	0.0974	0.176	0.143	0.302
Dicofol [Kelthane]	59.3	19.8	59.3	26.7	34.0	20.5	30.1	63.8
Dieldrin	0.24	0.002	0.240	0.00269	0.138	0.00207	0.00304	0.00644
Diuron	210	70	210	94.3	120	72.6	106	225
Endosulfan I (*alpha*)	0.22	0.056	0.220	0.0754	0.126	0.0581	0.0853	0.180
Endosulfan II (*beta*)	0.22	0.056	0.220	0.0754	0.126	0.0581	0.0853	0.180
Endosulfan sulfate	0.22	0.056	0.220	0.0754	0.126	0.0581	0.0853	0.180
Endrin	0.086	0.002	0.0860	0.00269	0.0493	0.00207	0.00304	0.00644
Guthion [Azinphos Methyl]	N/A	0.01	N/A	0.0135	N/A	0.0104	0.0152	0.0322
Heptachlor	0.52	0.004	0.520	0.00539	0.298	0.00415	0.00609	0.0128
Hexachlorocyclohexane (*gamma*) [Lindane]	1.126	0.08	1.13	0.108	0.645	0.0830	0.121	0.257
Lead	107	4.18	712	37.4	408	28.8	42.3	89.4
Malathion	N/A	0.01	N/A	0.0135	N/A	0.0104	0.0152	0.0322
Mercury	2.4	1.3	2.40	1.75	1.38	1.35	1.98	4.19
Methoxychlor	N/A	0.03	N/A	0.0404	N/A	0.0311	0.0457	0.0967
Mirex	N/A	0.001	N/A	0.00135	N/A	0.00104	0.00152	0.00322

Nickel	697	77.4	2212	331	1267	255	374	792
Nonylphenol	28	6.6	28.0	8.89	16.0	6.84	10.0	21.2
Parathion (ethyl)	0.065	0.013	0.0650	0.0175	0.0372	0.0135	0.0198	0.0419
Pentachlorophenol	17.6	13.5	17.6	18.2	10.1	14.0	14.8	31.4
Phenanthrene	30	30	30.0	40.4	17.2	31.1	25.2	53.4
Polychlorinated Biphenyls [PCBs]	2.0	0.014	2.00	0.0189	1.15	0.0145	0.0213	0.0451
Selenium	20	5	20.0	6.73	11.5	5.18	7.62	16.1
Silver	0.8	N/A	18.2	N/A	10.5	N/A	15.3	32.5
Toxaphene	0.78	0.0002	0.780	0.000269	0.447	0.000207	0.000304	0.000644
Tributyltin [TBT]	0.13	0.024	0.130	0.0323	0.0745	0.0249	0.0365	0.0773
2,4,5 Trichlorophenol	136	64	136	86.2	77.9	66.4	97.5	206
Zinc	175	176	796	1081	456	832	670	1418

HUMAN HEALTH

CALCULATE DAILY AVERAGE AND DAILY MAXIMUM EFFLUENT LIMITATIONS:

Parameter	***Water and Fish Criterion (µg/L)***	***Fish Only Criterion (µg/L)***	***Incidental Fish Criterion (µg/L)***	***WLAh (µg/L)***	***LTAh (µg/L)***	***Daily Avg. (µg/L)***	***Daily Max. (µg/L)***
Acrylonitrile	1.0	115	1150	168	157	230	487
Aldrin	1.146E-05	#########	#########	0.0000168	0.0000156	0.0000229	0.0000485
Anthracene	1109	1317	13170	1928	1793	2636	5577
Antimony	6	1071	10710	1568	1458	2143	4535
Arsenic	10	N/A	N/A	N/A	N/A	N/A	N/A
Barium	2000	N/A	N/A	N/A	N/A	N/A	N/A
Benzene	5	581	5810	851	791	1162	2460
Benzidine	0.0015	0.107	1.07	0.157	0.146	0.214	0.453
Benzo(*a*)anthracene	0.024	0.025	0.25	0.0366	0.0340	0.0500	0.105
Benzo(*a*)pyrene	0.0025	0.0025	0.025	0.00366	0.00340	0.00500	0.0105
Bis(chloromethyl)ether	0.0024	0.2745	2.745	0.402	0.374	0.549	1.16
Bis(2-chloroethyl)ether	0.60	42.83	428.3	62.7	58.3	85.7	181
Bis(2-ethylhexyl) phthalate [Di(2-ethylhexyl) phthalate]	6	7.55	75.5	11.1	10.3	15.1	31.9
Bromodichloromethane [Dichlorobromomethane]	10.2	275	2750	403	374	550	1164
Bromoform [Tribromomethane]	66.9	1060	10600	1552	1443	2121	4488
Cadmium	5	N/A	N/A	N/A	N/A	N/A	N/A
Carbon Tetrachloride	4.5	46	460	67.4	62.6	92.0	194
Chlordane	0.0025	0.0025	0.025	0.00366	0.00340	0.00500	0.0105
Chlorobenzene	100	2737	27370	4007	3727	5478	11590
Chlorodibromomethane [Dibromochloromethane]	7.5	183	1830	268	249	366	774
Chloroform [Trichloromethane]	70	7697	76970	11270	10481	15406	32595
Chromium (hexavalent)	62	502	5020	735	684	1004	2125
Chrysene	2.45	2.52	25.2	3.69	3.43	5.04	10.6
Cresols [Methylphenols]	1041	9301	93010	13618	12665	18617	39388
Cyanide (free)	200	N/A	N/A	N/A	N/A	N/A	N/A
4,4'-DDD	0.002	0.002	0.02	0.00293	0.00272	0.00400	0.00846
4,4'-DDE	0.00013	0.00013	0.0013	0.000190	0.000177	0.000260	0.000550
4,4'-DDT	0.0004	0.0004	0.004	0.000586	0.000545	0.000800	0.00169
2,4'-D	70	N/A	N/A	N/A	N/A	N/A	N/A
Danitol [Fenpropathrin]	262	473	4730	693	644	946	2003

1,2-Dibromoethane [Ethylene Dibromide]	0.17	4.24	42.4	6.21	5.77	8.48	17.9
m-Dichlorobenzene [1,3-Dichlorobenzene]	322	595	5950	871	810	1190	2519
o-Dichlorobenzene [1,2-Dichlorobenzene]	600	3299	32990	4830	4492	6603	13970
p-Dichlorobenzene [1,4-Dichlorobenzene]	75	N/A	N/A	N/A	N/A	N/A	N/A
3,3'-Dichlorobenzidine	0.79	2.24	22.4	3.28	3.05	4.48	9.48
1,2-Dichloroethane	5	364	3640	533	496	728	1541
1,1-Dichloroethylene [1,1-Dichloroethene]	7	55114	551140	80697	75048	110320	233398
Dichloromethane [Methylene Chloride]	5	13333	133330	19522	18155	26688	56463
1,2-Dichloropropane	5	259	2590	379	353	518	1096
1,3-Dichloropropene [1,3-Dichloropropylene]	2.8	119	1190	174	162	238	503
Dicofol [Kelthane]	0.30	0.30	3	0.439	0.409	0.600	1.27
Dieldrin	2.0E-05	2.0E-05	2.0E-04	0.0000293	0.0000272	0.0000400	0.0000846
2,4-Dimethylphenol	444	8436	84360	12352	11487	16886	35725
Di-*n*-Butyl Phthalate	88.9	92.4	924	135	126	184	391
Dioxins/Furans [TCDD Equivalents]	7.80E-08	7.97E-08	7.97E-07	1.17E-07	1.09E-07	1.59E-07	3.37E-07
Endrin	0.02	0.02	0.2	0.0293	0.0272	0.0400	0.0846
Epichlorohydrin	53.5	2013	20130	2947	2741	4029	8524
Ethylbenzene	700	1867	18670	2734	2542	3737	7906
Ethylene Glycol	46744	1.68E+07	1.68E+08	24598145	22876274	33628123	71145213
Fluoride	4000	N/A	N/A	N/A	N/A	N/A	N/A
Heptachlor	8.0E-05	0.0001	0.001	0.000146	0.000136	0.000200	0.000423
Heptachlor Epoxide	0.00029	0.00029	0.0029	0.000425	0.000395	0.000580	0.00122
Hexachlorobenzene	0.00068	0.00068	0.0068	0.000996	0.000926	0.00136	0.00287
Hexachlorobutadiene	0.21	0.22	2.2	0.322	0.300	0.440	0.931
Hexachlorocyclohexane (*alpha*)	0.0078	0.0084	0.084	0.0123	0.0114	0.0168	0.0355
Hexachlorocyclohexane (*beta*)	0.15	0.26	2.6	0.381	0.354	0.520	1.10
Hexachlorocyclohexane (*gamma*) [Lindane]	0.2	0.341	3.41	0.499	0.464	0.682	1.44
Hexachlorocyclopentadiene	10.7	11.6	116	17.0	15.8	23.2	49.1
Hexachloroethane	1.84	2.33	23.3	3.41	3.17	4.66	9.86
Hexachlorophene	2.05	2.90	29	4.25	3.95	5.80	12.2
4,4'-Isopropylidenediphenol [Bisphenol A]	1092	15982	159820	23400	21762	31990	67681
Lead	1.15	3.83	38.3	37.2	34.6	50.8	107
Mercury	0.0122	0.0122	0.122	0.0179	0.0166	0.0244	0.0516
Methoxychlor	2.92	3.0	30	4.39	4.09	6.00	12.7
Methyl Ethyl Ketone	13865	9.92E+05	9.92E+06	1452462	1350790	1985660	4200955
Methyl *tert*-butyl ether [MTBE]	15	10482	104820	15347	14273	20981	44389
Nickel	332	1140	11400	5298	4927	7242	15322
Nitrate-Nitrogen (as Total Nitrogen)	10000	N/A	N/A	N/A	N/A	N/A	N/A
Nitrobenzene	45.7	1873	18730	2742	2550	3749	7931
N-Nitrosodiethylamine	0.0037	2.1	21	3.07	2.86	4.20	8.89
N-Nitroso-di-*n*-Butylamine	0.119	4.2	42	6.15	5.72	8.40	17.7
Pentachlorobenzene	0.348	0.355	3.55	0.520	0.483	0.710	1.50
Pentachlorophenol	0.22	0.29	2.9	0.425	0.395	0.580	1.22

Polychlorinated Biphenyls [PCBs]	6.4E-04	6.4E-04	6.40E-03	0.000937	0.000871	0.00128	0.00271
Pyridine	23	947	9470	1387	1290	1895	4010
Selenium	50	N/A	N/A	N/A	N/A	N/A	N/A
1,2,4,5-Tetrachlorobenzene	0.23	0.24	2.4	0.351	0.327	0.480	1.01
1,1,2,2-Tetrachloroethane	1.64	26.35	263.5	38.6	35.9	52.7	111
Tetrachloroethylene [Tetrachloroethylene]	5	280	2800	410	381	560	1185
Thallium	0.12	0.23	2.3	0.337	0.313	0.460	0.974
Toluene	1000	N/A	N/A	N/A	N/A	N/A	N/A
Toxaphene	0.011	0.011	0.11	0.0161	0.0150	0.0220	0.0465
2,4,5-TP [Silvex]	50	369	3690	540	502	738	1562
1,1,1-Trichloroethane	200	784354	7843540	1148432	1068042	1570021	3321609
1,1,2-Trichloroethane	5	166	1660	243	226	332	702
Trichloroethylene [Trichloroethene]	5	71.9	719	105	97.9	143	304
2,4,5-Trichlorophenol	1039	1867	18670	2734	2542	3737	7906
TTHM [Sum of Total Trihalomethanes]	80	N/A	N/A	N/A	N/A	N/A	N/A
Vinyl Chloride	0.23	16.5	165	24.2	22.5	33.0	69.8

CALCULATE 70% AND 85% OF DAILY AVERAGE EFFLUENT LIMITATIONS:

Aquatic Life ***Parameter***	***70% of Daily Avg. (µg/L)***	***85% of Daily Avg. (µg/L)***
Aldrin	1.76	2.14
Aluminum	584	709
Arsenic	355	431
Cadmium	1.28	1.56
Carbaryl	1.17	1.43
Chlordane	0.00426	0.00518
Chlorpyrifos	0.0437	0.0531
Chromium (trivalent)	606	736
Chromium (hexavalent)	9.25	11.2
Copper	46.6	56.6
Cyanide (free)	11.4	13.8
4,4'-DDT	0.00106	0.00129
Demeton	0.106	0.129
Diazinon	0.100	0.121
Dicofol [Kelthane]	21.1	25.6
Dieldrin	0.00213	0.00259
Diuron	74.6	90.6
Endosulfan I (*alpha*)	0.0597	0.0725
Endosulfan II (*beta*)	0.0597	0.0725
Endosulfan sulfate	0.0597	0.0725
Endrin	0.00213	0.00259
Guthion [Azinphos Methyl]	0.0106	0.0129
Heptachlor	0.00426	0.00518
Hexachlorocyclohexane (*gamma*) [Lindane]	0.0853	0.103
Lead	29.6	35.9
Malathion	0.0106	0.0129
Mercury	1.38	1.68

Methoxychlor	0.0320	0.0388
Mirex	0.00106	0.00129
Nickel	262	318
Nonylphenol	7.04	8.55
Parathion (ethyl)	0.0138	0.0168
Pentachlorophenol	10.3	12.6
Phenanthrene	17.6	21.4
Polychlorinated Biphenyls [PCBs]	0.0149	0.0181
Selenium	5.33	6.47
Silver	10.7	13.0
Toxaphene	0.000213	0.000259
Tributyltin [TBT]	0.0256	0.0310
2,4,5 Trichlorophenol	68.2	82.9
Zinc	469	569

Human Health ***Parameter***	***70% of Daily Avg. (µg/L)***	***85% of Daily Avg. (µg/L)***
Acrylonitrile	161	195
Aldrin	0.0000160	0.0000195
Anthracene	1845	2240
Antimony	1500	1822
Arsenic	N/A	N/A
Barium	N/A	N/A
Benzene	814	988
Benzidine	0.149	0.182
Benzo(*a*)anthracene	0.0350	0.0425
Benzo(*a*)pyrene	0.00350	0.00425
Bis(chloromethyl)ether	0.384	0.467
Bis(2-chloroethyl)ether	60.0	72.8
Bis(2-ethylhexyl) phthalate [Di(2-ethylhexyl) phthalate]	10.5	12.8
Bromodichloromethane [Dichlorobromomethane]	385	467
Bromoform [Tribromomethane]	1485	1803
Cadmium	N/A	N/A
Carbon Tetrachloride	64.4	78.2
Chlordane	0.00350	0.00425
Chlorobenzene	3835	4656
Chlorodibromomethane [Dibromochloromethane]	256	311
Chloroform [Trichloromethane]	10784	13095
Chromium (hexavalent)	703	854
Chrysene	3.53	4.28
Cresols [Methylphenols]	13032	15824
Cyanide (free)	N/A	N/A
4,4'-DDD	0.00280	0.00340
4,4'-DDE	0.000182	0.000221
4,4'-DDT	0.000560	0.000680
2,4'-D	N/A	N/A
Danitol [Fenpropathrin]	662	804
1,2-Dibromoethane [Ethylene Dibromide]	5.94	7.21

m-Dichlorobenzene [1,3-Dichlorobenzene]	833	1012
o-Dichlorobenzene [1,2-Dichlorobenzene]	4622	5612
p-Dichlorobenzene [1,4-Dichlorobenzene]	N/A	N/A
3,3'-Dichlorobenzidine	3.13	3.81
1,2-Dichloroethane	510	619
1,1-Dichloroethylene [1,1-Dichloroethene]	77224	93772
Dichloromethane [Methylene Chloride]	18681	22685
1,2-Dichloropropane	362	440
1,3-Dichloropropene [1,3-Dichloropropylene]	166	202
Dicofol [Kelthane]	0.420	0.510
Dieldrin	0.0000280	0.0000340
2,4-Dimethylphenol	11820	14353
Di-*n*-Butyl Phthalate	129	157
Dioxins/Furans [TCDD Equivalents]	1.11E-07	1.35E-07
Endrin	0.0280	0.0340
Epichlorohydrin	2820	3424
Ethylbenzene	2615	3176
Ethylene Glycol	23539686	28583904
Fluoride	N/A	N/A
Heptachlor	0.000140	0.000170
Heptachlor Epoxide	0.000406	0.000493
Hexachlorobenzene	0.000952	0.00115
Hexachlorobutadiene	0.308	0.374
Hexachlorocyclohexane (*alpha*)	0.0117	0.0142
Hexachlorocyclohexane (*beta*)	0.364	0.442
Hexachlorocyclohexane (*gamma*) [Lindane]	0.477	0.580
Hexachlorocyclopentadiene	16.2	19.7
Hexachloroethane	3.26	3.96
Hexachlorophene	4.06	4.93
4,4'-Isopropylidenediphenol [Bisphenol A]	22393	27192
Lead	35.6	43.2
Mercury	0.0170	0.0207
Methoxychlor	4.20	5.10
Methyl Ethyl Ketone	1389962	1687811
Methyl *tert*-butyl ether [MTBE]	14687	17834
Nickel	5069	6155
Nitrate-Nitrogen (as Total Nitrogen)	N/A	N/A
Nitrobenzene	2624	3186
N-Nitrosodiethylamine	2.94	3.57
N-Nitroso-di-*n*-Butylamine	5.88	7.14
Pentachlorobenzene	0.497	0.604
Pentachlorophenol	0.406	0.493
Polychlorinated Biphenyls [PCBs]	0.000896	0.00108
Pyridine	1326	1611
Selenium	N/A	N/A
1,2,4,5-Tetrachlorobenzene	0.336	0.408
1,1,2,2-Tetrachloroethane	36.9	44.8

Tetrachloroethylene [Tetrachloroethylene]	392	476
Thallium	0.322	0.391
Toluene	N/A	N/A
Toxaphene	0.0154	0.0187
2,4,5-TP [Silvex]	517	627
1,1,1-Trichloroethane	1099014	1334517
1,1,2-Trichloroethane	232	282
Trichloroethylene [Trichloroethene]	100	122
2,4,5-Trichlorophenol	2615	3176
TTHM [Sum of Total Trihalomethanes]	N/A	N/A
Vinyl Chloride	23.1	28.0